AUTHENTICATED
U.S. GOVERNMENT
INFORMATION
GPO

FEDERAL REGISTER

Vol. 76 Wednesday,
No. 86 May 4, 2011

Pages 25211–25514

OFFICE OF THE FEDERAL REGISTER

The **FEDERAL REGISTER** (ISSN 0097–6326) is published daily, Monday through Friday, except official holidays, by the Office of the Federal Register, National Archives and Records Administration, Washington, DC 20408, under the Federal Register Act (44 U.S.C. Ch. 15) and the regulations of the Administrative Committee of the Federal Register (1 CFR Ch. I). The Superintendent of Documents, U.S. Government Printing Office, Washington, DC 20402 is the exclusive distributor of the official edition. Periodicals postage is paid at Washington, DC.

The **FEDERAL REGISTER** provides a uniform system for making available to the public regulations and legal notices issued by Federal agencies. These include Presidential proclamations and Executive Orders, Federal agency documents having general applicability and legal effect, documents required to be published by act of Congress, and other Federal agency documents of public interest.

Documents are on file for public inspection in the Office of the Federal Register the day before they are published, unless the issuing agency requests earlier filing. For a list of documents currently on file for public inspection, see *www.ofr.gov.*

The seal of the National Archives and Records Administration authenticates the Federal Register as the official serial publication established under the Federal Register Act. Under 44 U.S.C. 1507, the contents of the **Federal Register** shall be judicially noticed.

The **Federal Register** is published in paper and on 24x microfiche. It is also available online at no charge at *www.fdsys.gov*, a service of the U.S. Government Printing Office.

The online edition of the **Federal Register** is issued under the authority of the Administrative Committee of the Federal Register as the official legal equivalent of the paper and microfiche editions (44 U.S.C. 4101 and 1 CFR 5.10). It is updated by 6:00 a.m. each day the **Federal Register** is published and includes both text and graphics from Volume 59, 1 (January 2, 1994) forward. For more information, contact the GPO Customer Contact Center, U.S. Government Printing Office. Phone 202-512-1800 or 866-512-1800 (toll free). E-mail, *gpo@custhelp.com.*

The annual subscription price for the **Federal Register** paper edition is $749 plus postage, or $808, plus postage, for a combined **Federal Register, Federal Register** Index and List of CFR Sections Affected (LSA) subscription; the microfiche edition of the **Federal Register** including the **Federal Register** Index and LSA is $165, plus postage. Six month subscriptions are available for one-half the annual rate. The prevailing postal rates will be applied to orders according to the delivery method requested. The price of a single copy of the daily **Federal Register,** including postage, is based on the number of pages: $11 for an issue containing less than 200 pages; $22 for an issue containing 200 to 400 pages; and $33 for an issue containing more than 400 pages. Single issues of the microfiche edition may be purchased for $3 per copy, including postage. Remit check or money order, made payable to the Superintendent of Documents, or charge to your GPO Deposit Account, VISA, MasterCard, American Express, or Discover. Mail to: U.S. Government Printing Office—New Orders, P.O. Box 979050, St. Louis, MO 63197-9000; or call toll free 1-866-512-1800, DC area 202-512-1800; or go to the U.S. Government Online Bookstore site, see *bookstore.gpo.gov.*

There are no restrictions on the republication of material appearing in the **Federal Register.**

How To Cite This Publication: Use the volume number and the page number. Example: 76 FR 12345.

Postmaster: Send address changes to the Superintendent of Documents, Federal Register, U.S. Government Printing Office, Washington, DC 20402, along with the entire mailing label from the last issue received.

SUBSCRIPTIONS AND COPIES

PUBLIC

Subscriptions:

Paper or fiche	**202–512–1800**
Assistance with public subscriptions	**202–512–1806**

General online information **202–512–1530; 1–888–293–6498**

Single copies/back copies:

Paper or fiche	**202–512–1800**
Assistance with public single copies	**1–866–512–1800 (Toll-Free)**

FEDERAL AGENCIES

Subscriptions:

Paper or fiche	**202–741–6005**
Assistance with Federal agency subscriptions	**202–741–6005**

FEDERAL REGISTER WORKSHOP

THE FEDERAL REGISTER: WHAT IT IS AND HOW TO USE IT

FOR: Any person who uses the Federal Register and Code of Federal Regulations.

WHO: Sponsored by the Office of the Federal Register.

WHAT: Free public briefings (approximately 3 hours) to present:

1. The regulatory process, with a focus on the Federal Register system and the public's role in the development of regulations.
2. The relationship between the Federal Register and Code of Federal Regulations.
3. The important elements of typical Federal Register documents.
4. An introduction to the finding aids of the FR/CFR system.

WHY: To provide the public with access to information necessary to research Federal agency regulations which directly affect them. There will be no discussion of specific agency regulations.

WHEN: Tuesday, May 10, 2011
9 a.m.–12:30 p.m.

WHERE: Office of the Federal Register
Conference Room, Suite 700
800 North Capitol Street, NW.
Washington, DC 20002

RESERVATIONS: (202) 741–6008

Printed on recycled paper.

Contents

Federal Register

Vol. 76, No. 86

Wednesday, May 4, 2011

Agriculture Department
See Food and Nutrition Service
See Forest Service
NOTICES
Request for Members:
National Agricultural Research, Extension, Education, and Economics Advisory Board, 25298

Army Department
See Engineers Corps
NOTICES
Intent To Grant Partially Exclusive Patent License to videoNEXT Network Solutions, Inc., 25310

Arts and Humanities, National Foundation
See National Foundation on the Arts and the Humanities

Centers for Medicare & Medicaid Services
PROPOSED RULES
Medicare and Medicaid Programs:
Influenza Vaccination Standard for Certain Medicare and Medicaid Participating Providers and Suppliers, 25460–25477

Children and Families Administration
NOTICES
Agency Information Collection Activities; Proposals, Submissions, and Approvals:
Annual Report on Households Assisted by Low Income Home Energy Assistance, 25356

Coast Guard
PROPOSED RULES
Safety Zones:
TriMet Bridge Project, Willamette River; Portland, OR, 25278–25281
NOTICES
Cooperative Research and Development Agreements:
Butanol Fuel Blend Usage With Marine Outboard Engines, 25362–25364

Commerce Department
See Economic Development Administration
See Foreign-Trade Zones Board
See International Trade Administration
See National Oceanic and Atmospheric Administration

Commodity Futures Trading Commission
PROPOSED RULES
Rulemakings Implementing the Dodd-Frank Wall Street Reform and Consumer Protection Act, 25274–25277
NOTICES
Meetings:
Agricultural Advisory Committee, 25309–25310

Defense Department
See Army Department
See Engineers Corps

Drug Enforcement Administration
NOTICES
Importers of Controlled Substances; Applications, 25374
Importers of Controlled Substances; Registrations, 25374–25375
Manufacturers of Controlled Substances; Applications, 25375–25376
Manufacturers of Controlled Substances; Registrations, 25376

Economic Development Administration
NOTICES
Petitions by Firms for Determination of Eligibility To Apply for Trade Adjustment Assistance, 25299–25300

Education Department
NOTICES
Applications for New Awards:
Personnel Development To Improve Services and Results for Children With Disabilities; Correction, 25317
Technology and Media Services for Individuals With Disabilities—Captioned and Described Educational Media, 25311–25317

Energy Department
See Energy Efficiency and Renewable Energy Office
See Federal Energy Regulatory Commission
RULES
Energy Conservation Program:
Test Procedures for Fluorescent Lamp Ballasts, 25211–25229

Energy Efficiency and Renewable Energy Office
NOTICES
Meetings:
State Energy Advisory Board; Open Teleconference, 25317–25318

Engineers Corps
NOTICES
Environmental Impact Statements; Availability, etc.:
Zoar Levee and Diversion Dam, Dam Safety Modification Study, Tuscarawas County, OH, 25310–25311

Environmental Protection Agency
RULES
Control of Emissions From New and In-Use Marine Compression-Ignition Engines and Vessels; CFR Correction, 25246
Exemptions From the Requirements of Tolerances:
Carbon Dioxide, 25236–25240
Pesticide Tolerances:
Clothianidin, 25240–25246
PROPOSED RULES
Proposed Tolerance Actions:
Atrazine, Chloroneb, Chlorpyrifos, Clofencet, Endosulfan, et al., 25281–25295
NOTICES
Agency Information Collection Activities; Proposals, Submissions, and Approvals:
National Oil and Hazardous Substance Pollution Contingency Plan; Renewal, 25331–25333
Cross-Media Electronic Reporting:
Authorized Program Revision Approval, State of Maryland, 25334

Authorized Program Revision/Modification Approvals, State of South Dakota, 25333–25334
Receipt of Requests To Voluntarily Cancel Certain Pesticide Registrations, 25334–25340
Registration Review Proposed Decisions; Availability:
Fenoxycarb, Sodium Tetrathiocarbonate, and Temephos, 25340–25342
Requests for Nominations:
Children's Health Protection Advisory Committee, 25342–25343

Executive Office of the President
See Trade Representative, Office of United States

Federal Aviation Administration
RULES
Special Conditions:
Gulfstream Aerospace LP Model G250 Airplane, Dynamic Test Requirements for Side–facing, Single–occupant Seats, 25229–25231
Standard Instrument Approach Procedures; Takeoff Minimums; Obstacle Departure Procedures:
Miscellaneous Amendments, 25231–25234
PROPOSED RULES
Airworthiness Directives:
Airbus Model A300 B4–600, A300 B4–600R, and A300 F4–600R Series Airplanes, etc., 25259–25264
Cessna Aircraft Co. (Cessna) Models 337, 337A (USAF 02B), 337B, 337C, 337D, 337E, T337E, 337F, T337F, 337G, T337G, M337B, F 337E, FT337E, F 337F, FT337F, F 337G, and FT337GP Airplanes, 25264–25273
NOTICES
Requests To Release Airport Property:
Hammond Northshore Regional Airport, Hammond, LA, 25402
Waivers of Aeronautical Land-Use Assurance:
Richard Downing Airport, Coshocton, OH, 25402–25405

Federal Communications Commission
NOTICES
Agency Information Collection Activities; Proposals, Submissions, and Approvals, 25343–25345
Annual Assessment of Status of Competition in Market for Delivery of Video Programming, 25345–25352

Federal Deposit Insurance Corporation
NOTICES
Systemic Resolution Advisory Committee; Establishment, 25352–25353

Federal Energy Regulatory Commission
NOTICES
Applications for Amendments of Licenses and Soliciting Comments, Motions To Intervene, and Protests:
Public Utility District No. 1 Chelan County, 25318
Applications Tendered for Filing and Soliciting Additional Study Requests:
Putnam Green Power, LLC, 25319
Applications:
Hawthorn Water LLC, 25320
Indian Blanket Water LLC, 25320–25321
Magnolia Water LLC, 25319–25320
Oklahoma Rose Water LLC, 25322
Wild Flower Water LLC, 25321
Combined Filings, 25322–25328
Compliance Filings:
DCP Guadalupe Pipeline, LLC, 25328
Filings:
Worsham-Steed Gas Storage, LLC, 25328
Initial Market-Based Rate Filings Including Requests for Blanket Section 204 Authorization:
Gridway Energy Corp., 25329
New Mexico Green Initiatives, LLC, 25328–25329
Torofino Physical Trading LLC, 25329–25330
Proposed Restricted Service List for Programmatic Agreements:
Georgia Power Co., 25330
Requests Under Blanket Authorizations:
Texas Eastern Transmission, LP, 25330–25331
Williston Basin Interstate Pipeline Co., 25331

Federal Maritime Commission
NOTICES
Agreements Filed, 25353

Federal Trade Commission
NOTICES
Proposed Consent Agreements:
Hikma Pharmaceuticals PLC; Analysis of Agreement Containing Consent Orders To Aid Public Comment, 25353–25355

Food and Drug Administration
RULES
Listing of Color Additives Exempt From Certification; Reactive Blue 69, 25234–25235
NOTICES
Determinations of Regulatory Review Periods for Purpose of Patent Extensions:
VOTRIENT, 25357
Medical Imaging Drugs Advisory Committee; Reestablishment, 25357–25358
Meetings:
2011 Parenteral Drug Association/Food and Drug Administration Glass Quality Conference, 25358
Science Board Advisory Committee, 25359

Food and Nutrition Service
PROPOSED RULES
Supplemental Nutrition Assistance Program:
Certification, and Employment and Training Provisions, 25414–25458

Foreign Assets Control Office
NOTICES
Foreign Narcotics Kingpin Designation Act:
Additional Designations, 25405–25408
Unblocking of Specially Designated Nationals and Blocked Persons, 25406
Unblocking of Specially Designated Nationals and Blocked Persons; Executive Order (12978), 25408–25409

Foreign–Trade Zones Board
NOTICES
Applications for Expansion:
Foreign-Trade Zone 276, Kern County, CA, 25300
Applications for Manufacturing Authority:
Firth Rixson, Inc. d/b/a Firth Rixson Monroe, Foreign–Trade Zone 141, Rochester, NY, 25300–25301
Applications for Reorganization Under Alternative Site Framework:
Foreign-Trade Zone 141, County of Monroe, NY, 25301

Forest Service
NOTICES
Meetings:
Alpine County Resource Advisory Committee, 25299
Southwest Idaho Resource Advisory Committee, 25298
White Pine-Nye County Resource Advisory Committee, 25298–25299

Health and Human Services Department
See Centers for Medicare & Medicaid Services
See Children and Families Administration
See Food and Drug Administration
See Substance Abuse and Mental Health Services Administration
NOTICES
Delegations of Authority, 25355
Schedule for Assessment of HIT Policy Committee Recommendations, 25355–25356

Homeland Security Department
See Coast Guard
See U.S. Citizenship and Immigration Services
NOTICES
Meetings:
Data Privacy and Integrity Advisory Committee, 25361–25362

Housing and Urban Development Department
NOTICES
Agency Information Collection Activities; Proposals, Submissions, and Approvals:
County Data Record Project, 25365–25366
Housing Opportunities for Persons With AIDS (HOPWA) Program, etc., 25366

Interior Department
See Land Management Bureau
See Office of Natural Resources Revenue

International Trade Administration
NOTICES
Antidumping Duty Administrative Reviews; Extensions of Time Limits for Preliminary Results:
Floor-Standing, Metal-Top Ironing Tables and Certain Parts Thereof from People's Republic of China, 25301–25302
Executive-led Eurasian Trade Mission, 25302–25306

International Trade Commission
NOTICES
Investigations:
Certain Poliimide Films, Products Containing Same, and Related Methods, 25373–25374

Justice Department
See Drug Enforcement Administration

Labor Department
See Mine Safety and Health Administration
See Occupational Safety and Health Administration

Land Management Bureau
NOTICES
Filings of Plats of Survey:
Nebraska, 25366–25367

Mine Safety and Health Administration
PROPOSED RULES
Examinations of Work Areas in Underground Coal Mines for Violations of Mandatory Health or Safety Standards:
Pattern of Violations, 25277–25278
Lowering Miners' Exposure to Respirable Coal Mine Dust, Including Continuous Personal Dust Monitors, 25277

National Foundation on the Arts and the Humanities
NOTICES
Meetings:
Arts and Artifacts Indemnity Panel Advisory Committee, 25378

National Labor Relations Board
NOTICES
Meetings; Sunshine Act, 25378

National Oceanic and Atmospheric Administration
RULES
Fisheries Off West Coast States:
West Coast Salmon Fisheries; 2011 Management Measures, 25246–25258
Taking and Importing Marine Mammals:
Military Training Activities Conducted Within Gulf of Alaska Temporary Maritime Activities Area, 25480–25513
PROPOSED RULES
Fisheries of Exclusive Economic Zone Off Alaska:
Bering Sea and Aleutian Islands King and Tanner Crabs, 25295–25297
NOTICES
Agency Information Collection Activities; Proposals, Submissions, and Approvals:
Highly Migratory Species Vessel Logbooks and Coast-Earnings Data Reports, 25306–25307
Environmental Assessments; Availability, etc.:
PacifiCorp Klamath Hydroelectric Project Interim Operations; Incidental Take Permit and Habitat Conservation Plan, 25307–25308
Issuances Of Permits:
Marine Mammals; File No. 15510, 25308–25309
Meetings:
National Climate Assessment and Development Advisory Committee, 25309

Nuclear Regulatory Commission
NOTICES
Applications for Amendments to Facility Operating Licenses; Withdrawals:
Exelon Generation Co., LLC, and PSEG Nuclear, LLC, Peach Bottom Atomic Power Station, Units 2 And 3, 25378–25379

Occupational Safety and Health Administration
NOTICES
Agency Information Collection Activities; Proposals, Submissions, and Approvals:
Occupational Exposure to Hazardous Chemicals in Laboratories Standard, 25376–25378

Office of Natural Resources Revenue
NOTICES
Agency Information Collection Activities; Proposals, Submissions, and Approvals, 25367–25373

Office of United States Trade Representative
See Trade Representative, Office of United States

Peace Corps
NOTICES
Agency Information Collection Activities; Proposals, Submissions, and Approvals, 25379

Personnel Management Office
NOTICES
Agency Information Collection Activities; Proposals, Submissions, and Approvals, 25379–25380
Agency Information Collection Activities; Proposals, Submissions, and Approvals:
Information and Instructions on Your Reconsideration Rights, 25380

Postal Regulatory Commission
NOTICES
Meetings; Sunshine Act, 25380–25381
Postal Service Market Test, 25381

Securities and Exchange Commission
PROPOSED RULES
Listing Standards for Compensation Committees, 25273–25274
NOTICES
Agency Information Collection Activities; Proposals, Submissions, and Approvals, 25381–25382
Self-Regulatory Organizations; Proposed Rule Changes:
Boston Stock Exchange Clearing Corp., 25396–25397
Chicago Board Options Exchange, Inc., 25392–25394
Chicago Stock Exchange, Inc., 25394–25395
Depository Trust Co., 25389–25390
EDGA Exchange, Inc., 25386–25388
EDGX Exchange, Inc., 25388–25389
Financial Industry Regulatory Authority, Inc., 25385–25386, 25397–25400
International Securities Exchange, LLC, 25390–25392
NASDAQ Stock Market LLC, 25384–25385
Stock Clearing Corp. of Philadelphia, 25382–25384

Small Business Administration
NOTICES
Meetings:
Advisory Committee on Veterans Business Affairs, 25400–25401
Revocation of Small Business Investment Company LIcense, 25401

Substance Abuse and Mental Health Services Administration
NOTICES
Agency Information Collection Activities; Proposals, Submissions, and Approvals, 25359–25361

Trade Representative, Office of United States
NOTICES
Decisions Not To Initiate Investigations:
Access to German Bar Aptitude Examination, 25401–25402

Transportation Department
See Federal Aviation Administration

Treasury Department
See Foreign Assets Control Office

U.S. Citizenship and Immigration Services
NOTICES
Agency Information Collection Activities; Proposals, Submissions, and Approvals, 25364–25365

Veterans Affairs Department
NOTICES
Privacy Act; Systems of Records, 25409–25412

Separate Parts In This Issue

Part II
Agriculture Department, Food and Nutrition Service, 25414–25458

Part III
Health and Human Services Department, Centers for Medicare & Medicaid Services, 25460–25477

Part IV
Commerce Department, National Oceanic and Atmospheric Administration, 25480–25513

Reader Aids
Consult the Reader Aids section at the end of this page for phone numbers, online resources, finding aids, reminders, and notice of recently enacted public laws.

To subscribe to the Federal Register Table of Contents LISTSERV electronic mailing list, go to http://listserv.access.gpo.gov and select Online mailing list archives, FEDREGTOC-L, Join or leave the list (or change settings); then follow the instructions.

CFR PARTS AFFECTED IN THIS ISSUE

A cumulative list of the parts affected this month can be found in the Reader Aids section at the end of this issue.

7 CFR

Proposed Rules:

271 25414
272 25414
273 25414

10 CFR

430 25211

14 CFR

25 25229
97 (2 documents) 25231, 25232

Proposed Rules:

39 (2 documents) 25259, 25264

17 CFR

Proposed Rules:

Ch. I 25274
229 25273
240 25273

21 CFR

73 25234

30 CFR

Proposed Rules:

70 25277
71 25277
72 25277
75 (2 documents) 25277
90 25277
104 25277

33 CFR

Proposed Rules:

165 25278

40 CFR

180 (2 documents) 25236, 25240
1042 25246

Proposed Rules:

180 25281

42 CFR

Proposed Rules:

482 25460
485 25460
491 25460
494 25460

50 CFR

218 25480
660 25246

Proposed Rules:

679 25295

Rules and Regulations

Federal Register

Vol. 76, No. 86

Wednesday, May 4, 2011

This section of the FEDERAL REGISTER contains regulatory documents having general applicability and legal effect, most of which are keyed to and codified in the Code of Federal Regulations, which is published under 50 titles pursuant to 44 U.S.C. 1510.

The Code of Federal Regulations is sold by the Superintendent of Documents. Prices of new books are listed in the first FEDERAL REGISTER issue of each week.

DEPARTMENT OF ENERGY

10 CFR Part 430

[Docket No. EERE–2009–BT–TP–0016]

RIN: 1904–AB99

Energy Conservation Program: Test Procedures for Fluorescent Lamp Ballasts

AGENCY: Office of Energy Efficiency and Renewable Energy, Department of Energy.

ACTION: Final rule.

SUMMARY: The U.S. Department of Energy (DOE) issues a final rule amending the existing test procedures for fluorescent lamp ballasts at Appendix Q and establishing a new test procedure at Appendix Q1. The amendments to appendix Q update a reference to an industry test procedure. The new test procedure at Appendix Q1 changes the efficiency metric to ballast luminous efficiency (BLE), which is measured directly using electrical measurements instead of the photometric measurements employed in the test procedure at Appendix Q. The calculation of BLE includes a correction factor to account for the reduced lighting efficacy of low frequency lamp operation. The test procedure specifies use of a fluorescent lamp load during testing, allowing ballasts to operate closer to their optimal design points and providing a better descriptor of real ballast performance compared to resistor loads. If DOE determines that amendments to the fluorescent lamp ballast energy conservation standards are required, they will be issued or published by June 30, 2011, and use of the test procedures at Appendix Q1 will be required on the compliance date of the amendments. Until that time, manufacturers must use the procedures at Appendix Q to certify compliance.

DATES: The effective date of the final rule is June 3, 2011. After October 31, 2011, manufacturers may not make any representation regarding fluorescent lamp ballast efficiency unless such ballast has been tested in accordance with the final rule provisions in Appendix Q.

The incorporation by reference of certain standards in this rulemaking is approved by the Director of the Office of the Federal Register as of June 3, 2011.

ADDRESSES: The public may review copies of all materials related to this rulemaking at the U.S. Department of Energy, Resource Room of the Building Technologies Program, 950 L'Enfant Plaza, SW., Suite 600, Washington, DC, (202) 586–2945, between 9 a.m. and 4 p.m., Monday through Friday, except Federal holidays. Please contact Ms. Brenda Edwards at the above telephone number, or by e-mail at *Brenda_Edwards@ee.doe.gov,* for additional information regarding visiting the Resource Room.

Docket: The docket is available for review at *http://www.regulations.gov,* including **Federal Register** documents, framework documents, public meeting attendee lists and transcripts, comments, and other supporting documents/materials. All documents in the docket are listed in the regulations.gov index. However, not all documents listed in the index may be publicly available, such as information that is exempt from public disclosure.

A link to the docket Web page can be found at: *http://www.eere.energy.gov/buildings/appliance_standards/residential/fluorescent_lamp_ballasts.html.* This Web page will contain a link to the docket for this document on the *http://regulations.gov* site. The regulations.gov Web page will contain simple instructions on how to access all documents, including public comments, in the docket.

FOR FURTHER INFORMATION CONTACT: Dr. Tina Kaarsberg, U.S. Department of Energy, Office of Energy Efficiency and Renewable Energy, Building Technologies Program, EE–2J, 1000 Independence Avenue, SW., Washington, DC, 20585–0121, Telephone: (202) 287–1393, E-mail: *tina.kaarsberg@ee.doe.gov* or Ms. Elizabeth Kohl, U.S. Department of Energy, Office of the General Counsel, GC–71, 1000 Independence Avenue, SW., Washington, DC, 20585–0121. Telephone: (202) 586–7796. E-mail: *elizabeth.kohl@hq.doe.gov.*

SUPPLEMENTARY INFORMATION: This final rule incorporates by reference into part 430 the following industry standards:

(1) ANSI C78.81–2010, American National Standard for Electric Lamps—Double-Capped Fluorescent Lamps—Dimensional and Electrical Characteristics, approved January 14, 2010; IBR approved for Appendix Q and Appendix Q1 to Subpart B.

(2) ANSI C82.1–2004 ("ANSI C82.1"), American National Standard for Lamp Ballast—Line-Frequency Fluorescent Lamp Ballast, approved November 19, 2004; IBR approved for Appendix Q and Appendix Q1 to Subpart B.

(3) ANSI C82.11 Consolidated-2002 ("ANSI C82.11"), American National Standard for Lamp Ballasts—High-frequency Fluorescent Lamp Ballasts—Supplements, approved March 11, 1999, August 5, 1999 and January 17, 2002; IBR approved for Appendix Q and Appendix Q1 to Subpart B.

(4) ANSI C82.13–2002 ("ANSI C82.13"), American National Standard for Lamp Ballasts—Definitions for Fluorescent Lamps and Ballasts, approved July 23, 2002; IBR approved for Appendix Q and Appendix Q1 to Subpart B.

These standards are available at *http://webstore.ansi.org/.* You can also view copies of these standards at the U.S. Department of Energy, Resource Room of the Building Technologies Program, 950 L'Enfant Plaza, SW., 6th Floor, Washington, DC 20024, (202) 586–2945, between 9 a.m. and 4 p.m., Monday through Friday, except Federal holidays.

I. Authority and Background
II. Summary of the Final Rule
III. Discussion
A. Appendix Q Test Procedure
B. Appendix Q1 Test Procedure—Metric
1. Ballast Luminous Efficiency
2. BEF to BLE
C. Appendix Q1 Test Procedure—Ballast Factor
D. Appendix Q1 Test Procedure—Requirements
1. Test Conditions
2. Test Setup
3. Test Method
4. Calculations
5. Updates to Existing Test Procedure
6. Normative References for ANSI C82.2–2002

E. Burden to Conduct the Test Procedure
F. Impact on Measured Energy Efficiency
G. Scope of Applicability
H. Certification and Enforcement
IV. Procedural Issues and Regulatory Review
A. Review Under Executive Order 12866
B. Review Under the Regulatory Flexibility Act
C. Review Under the Paperwork Reduction Act of 1995
D. Review Under the National Environmental Policy Act of 1969
E. Review Under Executive Order 13132
F. Review Under Executive Order 12988
G. Review Under the Unfunded Mandates Reform Act of 1995
H. Review Under the Treasury and General Government Appropriations Act, 1999
I. Review Under Executive Order 12630
J. Review Under Treasury and General Government Appropriations Act, 2001
K. Review Under Executive Order 13211
L. Review Under Section 32 of the Federal Energy Administration Act of 1974
M. Congressional Notification
N. Approval of the Office of the Secretary

I. Authority and Background

Title III of the Energy Policy and Conservation Act (42 U.S.C. 6291, *et seq.;* "EPCA" or, "the Act") sets forth a variety of provisions designed to improve energy efficiency. (All references to EPCA refer to the statute as amended through the Energy Independence and Security Act of 2007 (EISA 2007), Pub. L. 110–140 (Dec. 19, 2007)). Part B of title III (42 U.S.C. 6291–6309), which was re-designated as Part A on codification in the U.S. Code for editorial reasons, establishes the "Energy Conservation Program for Consumer Products Other Than Automobiles." These include fluorescent lamp ballasts, the subject of today's notice. (42 U.S.C. 6291(1), (2) and 6292(a)(13))

Under EPCA, this program consists essentially of three parts: (1) Testing, (2) labeling, (3) Federal energy conservation standards, and (4) certification and enforcement procedures. The testing requirements consist of test procedures that manufacturers of covered products must use (1) as the basis for certifying to DOE that their products comply with the applicable energy conservation standards adopted under EPCA, and (2) for making representations about the efficiency of those products. Similarly, DOE must use these test requirements to determine whether the products comply with any relevant standards promulgated under EPCA.

The Energy Independence and Security Act of 2007 also amended EPCA to require DOE to review test procedures for all covered products at least once every seven years. DOE must either amend the test procedures or publish notice in the **Federal Register** of any determination not to amend a test procedure. (42 U.S.C. 6293(b)(1)(A)) To fulfill this periodic review requirement, DOE invited comment on all aspects of the existing test procedures for fluorescent lamp ballasts that appear at Title 10 of the CFR part 430, Subpart B, Appendix Q ("Uniform Test Method for Measuring the Energy Consumption of Fluorescent Lamp Ballasts").

In a separate rulemaking proceeding, DOE is considering amending energy conservation standards for fluorescent lamp ballasts (docket number EERE–2007–BT–STD– 0016; hereinafter referred to as the "standards rulemaking"). DOE initiated that rulemaking by publishing a **Federal Register** (FR) notice announcing a public meeting and availability of the framework document ("Energy Efficiency Program for Consumer Products: Public Meeting and Availability of the Framework Document for Fluorescent Lamp Ballasts") on January 22, 2008. 73 FR 3653. On February 6, 2008, DOE held a public meeting in Washington, DC to discuss the framework document for the standards rulemaking (hereinafter referred to as the "2008 public meeting"). At that meeting, attendees also discussed potential revisions to the test procedure for active mode energy consumption relevant to this test procedure rulemaking. On March 24, 2010, DOE published a notice of public meeting and availability of the preliminary technical support document (TSD) for the standards rulemaking. 75 FR 14319. On April 26, 2010, DOE held a public meeting to discuss the standards preliminary analysis and the proposed test procedure discussed below. On April 11, 2011, DOE published a notice of public rulemaking (NOPR) for the fluorescent lamp ballast standards rulemaking. 76 FR 20090.

For the test procedure, DOE published a NOPR on March 24, 2010. 75 FR 14288. As indicated above, on April 26, 2010, DOE held a public meeting to discuss the test procedure proposals in the NOPR and the preliminary TSD for the standards rulemaking (hereafter "NOPR public meeting"). DOE modified the test procedure based on the comments it received on the NOPR. On November 24, 2010, DOE published a test procedure supplemental notice of proposed rulemaking (SNOPR). 75 FR 71570. All comments on the fluorescent lamp ballast test procedure SNOPR are discussed in section III of this rulemaking.

As discussed in the SNOPR, DOE has also established a standby mode and off mode test procedure. The Energy Independence and Security Act of 2007 (Pub. L. 110–140) amended EPCA to require that, for each covered product for which DOE's current test procedures do not fully account for standby mode and off mode energy consumption, DOE amend the test procedures to include standby mode and off mode energy consumption into the overall energy efficiency, energy consumption, or other energy descriptor for that product. If an integrated test procedure is technically infeasible, DOE must prescribe a separate standby mode and off mode energy use test procedure, if technically feasible. (42 U.S.C. 6295(gg)(2)(A)) DOE published a final rule addressing standby mode and off mode energy consumption for fluorescent lamp ballasts in the **Federal Register** on October 22, 2009. 74 FR 54445. This final rulemaking does not include any changes to the measurement of standby and off mode energy consumption for fluorescent lamp ballasts.

General Test Procedure Rulemaking Process

Under 42 U.S.C. 6293, EPCA sets forth the criteria and procedures DOE must follow when prescribing or amending test procedures for covered products. EPCA requires that any test procedures prescribed or amended under this section be reasonably designed to produce test results that measure energy efficiency, energy use or estimated annual operating cost of a covered product during a representative average use cycle or period of use, as determined by the Secretary of Energy. Test procedures must also not be unduly burdensome to conduct. (42 U.S.C. 6293(b)(3))

In addition, if DOE determines that a test procedure amendment is warranted, it must publish proposed test procedures and offer the public an opportunity to present oral and written comments on them. (42 U.S.C. 6293(b)(2)) Finally, in any rulemaking to amend a test procedure, DOE must determine whether the proposed test procedure would alter the measured energy efficiency of any covered product as determined under the existing test procedure. (42 U.S.C. 6293(e)(1)) If DOE determines that the amended test procedure would alter the measured efficiency of a covered product, DOE must amend the applicable energy conservation standard accordingly. (42 U.S.C. 6293(e)(2)).

In today's final rule, DOE institutes a new test procedure that measures a different metric than the test procedure at Appendix Q. The new metric is the BLE metric described in section III.B.1. The new test procedure will be used only with any standards developed or

revised using data collected with the new test procedure.

II. Summary of the Final Rule

In this test procedure final rule, DOE amends the current procedures for fluorescent lamp ballasts to reduce measurement variation and testing burden. These changes eliminate photometric measurements and prescribe the use of electrical measurements of a lamp-and-ballast system. In addition, this test procedure measures a new metric, ballast luminous efficiency (BLE), which more directly assesses the electrical losses in a ballast compared to the existing ballast efficacy factor (BEF) metric. DOE also establishes a minor update to the existing test procedure in appendix Q. The following paragraphs summarize these changes.

In the SNOPR, DOE proposed to measure ballast input power and lamp arc power using only electrical measurements of a lamp-and-ballast system. Variation in the measured power of a reference lamp was minimized by the calculation of ballast luminous efficiency, where BLE was equal to total lamp arc power divided by ballast input power. This proposal remains unchanged in this final rule. To account for the increase in lamp efficacy associated with high-frequency lamp operation versus low-frequency, DOE also proposed an adjustment to the BLE of low-frequency systems. DOE proposed that low-frequency BLE be multiplied by 0.9 to account for the approximately 10% increase in lighting efficacy associated with high-frequency lamp operation. For the final rule, DOE assigns specific lamp operating frequency adjustment factors for each ballast type considered. The adjustment factors more accurately approximate the increase in lighting efficacy associated with high-frequency lamp operation. In the SNOPR, DOE also proposed a method for calculating the ballast factor (BF) of a ballast by dividing the measured lamp arc power on the test ballast by the measured lamp arc power on a reference ballast. In cases where reference ballast operating conditions were unavailable, the SNOPR provided a reference lamp power (specific to the ballast type) from ANSI standard C78.81–2010 or from empirical results. In this final rule, DOE is not defining a BF measurement process because the standards NOPR does not use BF to define product classes.

The final test procedure includes specific provisions for the testing of ballasts identified in the proposed scope of coverage for the standards NOPR. If the scope of coverage changes in later stages of the standards rulemaking, DOE will by rule add or remove provisions from the test procedure so that it is consistent with the final scope of coverage. See section III.G for further detail.

In any rulemaking to amend a test procedure, DOE must determine whether the proposed test procedure would alter the measured energy efficiency of any covered product as determined under the existing test procedure. (42 U.S.C. 6293(e)(1)) If DOE determines that the amended test procedure would alter the measured efficiency of a covered product, DOE must amend the applicable energy conservation standard accordingly. (42 U.S.C. 6293(e)(2)) The new test procedure will describe the efficiency of a ballast in terms of a new metric, BLE. To ensure that the standards developed in the ongoing standards rulemaking account for any changes to the test procedure, DOE is developing the standards based on the measured BLE generated by the active mode test procedure established in this rulemaking. The revised test procedure, to be published as Appendix Q1 of 10 CFR part 430 Subpart B, will be required concurrent with the compliance date of any upcoming amendments to the fluorescent lamp ballast standards. DOE is required by a consent decree to issue any amended fluorescent lamp ballast standards by June 30, 2011.

Until use of Appendix Q1 is required, manufacturers should continue testing these ballasts using the test procedure at Appendix Q to determine compliance with existing standards. In the SNOPR, DOE proposed to make minor updates to the existing test procedure, published at Appendix Q to Subpart B of part 430. The final rule does not affect this proposal. DOE is amending the reference to ANSI C82.2–1984 in the existing test procedure (appendix Q) to ANSI C82.2–2002. DOE does not believe the updated standard will impose increased testing burden or alter the measured BEF of fluorescent lamp ballasts. The amendments to Appendix Q are effective on June 3, 2011, and manufacturers may not make any representation regarding fluorescent lamp ballast efficiency unless such ballast has been tested in accordance with the final rule provisions in Appendix Q after October 31, 2011. See 42 U.S.C. 6293(c).

In addition, the test procedures for any ballasts that operate in standby mode are also located in Appendix Q. Manufacturers must continue to use the standby and off mode procedures in Appendix Q for certification purposes at this time. DOE has also included the test procedures for any ballasts that operate in standby mode in Appendix Q1. When use of the procedures in Appendix Q1 are required for certification, manufacturers can continue to use the same procedure in Appendix Q1 and will no longer need to refer to Appendix Q for that procedure.

III. Discussion

A. Appendix Q Test Procedure

The ballast test procedure (in Appendix Q to Subpart B of 10 CFR part 430 determines the performance of a fluorescent lamp ballast based on light output measurements and ballast input power. The metric used is called ballast efficacy factor (BEF). BEF is relative light output divided by the power input of a fluorescent lamp ballast, as measured under test conditions specified in ANSI standard C82.2–1984, or as may be prescribed by the Secretary. (42 U.S.C. 6291(29)(C))

The BEF metric uses light output of the lamp-and-ballast system instead of ballast electrical output power in its calculation of the performance of a ballast. To measure relative light output, ANSI C82.2–1984 directs the user to measure the photocell output of the test ballast operating a reference lamp and the light output of a reference ballast operating the same reference lamp. Dividing photocell output of the test ballast system by the photocell output of the reference ballast system yields relative light output or ballast factor. Concurrent with measuring relative light output, the user is directed to measure ballast input power. BEF is then calculated by dividing relative light output by input power and multiplying by 100. A ballast that produces same light output as another ballast (operating the same lamp type and number of lamps) with less input power will have a larger BEF.

B. Appendix Q1 Test Procedure—Metric

1. Ballast Luminous Efficiency

In the SNOPR, DOE proposed a new metric to describe the efficiency of a ballast called ballast luminous efficiency (BLE). The BLE metric and test procedure were based on the NEMA lamp-based ballast efficiency (BE) test procedure considered in the test procedure NOPR. The BLE metric is equal to ballast input power divided by the lamp arc power of a lamp-and-ballast system. DOE also proposed that for low-frequency ballasts the quantity ballast input power divided by lamp arc power be multiplied by 0.9 to account for the approximately 10% increase in lighting efficacy associated with high-

frequency lamp operation. In this final rule, DOE establishes lamp specific low-frequency adjustment factors to more accurately approximate this increase in lighting efficacy. DOE continues to use the definition of high frequency in ANSI C82.13–2002, which includes ballasts operating at frequencies of 10 kHz or more.

DOE proposed the BLE test procedure because it reduced measurement variation and testing burden compared to the existing test procedure and other alternatives. In contrast to BEF and relative system efficacy (RSE), the BLE metric could be used to compare the efficiency across many different types of ballasts. RSE and BEF can only be used to make direct comparisons between ballasts that operate certain lamp types, while BLE can be used for comparisons among ballasts that operate all lamp types. DOE believed that the use of a lamp-and-ballast system allowed the ballast to operate at its natural operating point and would more accurately assess ballast performance than other methods in which the ballast test load is a resistor. DOE also believed that the use of electrical measurements and the calculation of BLE reduced the impact of lamp manufacturing variation on the efficiency descriptor compared to the existing test procedure.

NEMA commented on the assignment of an adjustment factor based on lamp operating frequency, stating that low frequency should be defined as 60 Hertz (Hz) and high frequency should be defined as equal to or higher than 25 kHz. NEMA stated that it knows of no ballasts that operate between 10 and 25 kHz, and that most ballasts operate above 40 kHz to avoid frequencies used by other devices between 32 and 40 kHz and anti-theft devices above 50 kHz. NEMA also commented that luminaire manufacturers have defined a specification for high frequency ballasts that avoid frequencies of concern. (NEMA, No. 20 at p. 3 [1])

In its test data, DOE identified ten electronic ballasts (manufactured by five different companies) that operate between 20 and 25 kHz, and intends to include these ballasts in the high frequency category. These ballasts operate F96T12/ES, F96T8HO, F96T8HO/ES, and F96T12HO cold temperature lamps. Therefore, DOE continues to use the definition of high frequency provided by ANSI C82.13–2002, which includes ballasts operating at frequencies of 10 kHz or more. DOE is not changing its proposed definition for low-frequency ballasts, which is defined as a ballast that operates at a supply frequency of 50 to 60 Hz and operates the lamp at the same frequency as the supply.

Other than the high frequency issue discussed above, comments received on the metric changes proposed in the SNOPR were generally positive. Though the CA IOUs and NEEA noted their preference for a test procedure that continued to relate energy consumption to the light output of the lamp and ballast system, they supported the SNOPR proposal of lamp-based BLE. The California IOUs (CA IOUs) commented that the test procedure proposed in the SNOPR represented a significant improvement over the procedure proposed in the NOPR, and the Northwest Energy Efficiency Alliance (NEEA) fully supported DOE's proposal of a metric and test procedure that focus on the electrical inputs and outputs of the ballast. (CA IOUs, No. 19 at p. 1, 2; NEEA, No. 18 at p. 1, 4) The CA IOUs and NEEA concurred with DOE's observations and arguments regarding the drawbacks of the resistor-based test procedure and the advantages of the proposed lamp-based ballast efficiency test procedure. (CA IOUs, No. 19 at p. 2; NEEA, No. 18 at p. 2) The Natural Resources Defense Council (NRDC) also supported DOE's proposal to measure lamp arc power rather than using resistor banks to simulate lamps because it will yield more accurate and consistent results across ballast types. (NRDC, No. 21 at p. 1) The CA IOUs and the NRDC also agreed with DOE that the new metric will allow for increased comparison among ballasts of different ballast factors and among ballasts intended for operation with different numbers of lamps. Both organizations believe this will make the new metric more useful in designing and implementing rebate programs, and will also make it much easier to set standard levels of compliance for government or non-government procurement policies that specify high efficiency ballasts. (CA IOUs, No. 19 at p. 2; NRDC, No. 21 at p. 1) Based on the general support for the BLE metric and its use of lamp loads rather than resistor loads, DOE establishes use of the BLE metric in the final rule.

DOE also received comment on whether the proposed name of the metric accurately conveys what ballast properties the metric describes. NEEA, the CA IOUs, and NRDC were dissatisfied with the name "ballast luminous efficiency" suggested for the new metric. The new method adjusts the ratio of lamp arc power to ballast input power for low-frequency ballasts to account for the reduced light output per unit of power input for those ballasts but does not involve the measurement of light output. These organizations commented that the term "luminous" suggests the continued use of light output as part of the test procedure and is thus misleading. (NEEA, No. 18 at p. 1; CA IOUs, No. 19 at p. 1; and NRDC, No. 21 at p. 1) NEEA suggested that the alternate names "ballast electrical efficiency", "ballast component efficiency", and "ballast-lamp efficiency" would be more descriptive of the proposed metric since the operating frequency of the ballast is an electrical characteristic with inherent lamp/ballast system efficiency impacts. (NEEA, No. 18 at p. 1) The CA IOUs suggested the names "ballast lamp efficiency" and "ballast arc efficiency" as more accurate conveyors of the basis of the test measurement. (CA IOUs, No. 19 at p. 1)

DOE disagrees with NEEA, NRDC, and the CA IOUs and believes ballast luminous efficiency is the best description of the metric. In addition to describing electrical losses, the BLE metric also accounts for the lamp efficacy difference between low and high frequency operation. The term "luminous" relates to BLE's treatment of lamp operating frequency's impact on lamp efficacy, and the term "efficiency" relates to BLE's treatment of electrical losses within the ballast. The other names suggested do not describe both of these elements. Therefore, DOE uses the term ballast luminous efficiency in this final rule.

2. BEF to BLE

In the SNOPR, DOE proposed a method for correlating the existing BEF standards to BLE. Part of this correlation includes accounting for a frequency adjustment factor (the SNOPR proposed 0.9 for low frequency ballasts) DOE included in its BLE proposal. When converting a low-frequency BEF to BLE, the SNOPR proposed BEF must be multiplied by 0.9 to convert to BLE. NEMA commented that DOE may be incorrectly using the 0.9 factor in its calculations of high frequency gains in efficiency. NEMA stated that different arc powers specified for high frequency and low frequency operation on the same lamp are specified at the same light output, which implies that there is no further need to correct for high frequency gains because these are already accounted for in the different arc power specifications. (NEMA, No.

[1] A notation in the form "NEMA, No. 20 at p. 3" identifies a written comment that DOE has received and has included in the docket of this rulemaking or a written docket submission. This particular notation refers to a comment: (1) Submitted in writing on December 27, 2010; (2) in document number 20 in the docket of this rulemaking; and (3) appearing on page 3 of the document.

20 at p. 2) NEMA also commented that DOE multiplied the low frequency BLE by 0.9 when it should have divided it by 0.9 to generate the required BLE needed to attain the same light output and hence BEF because low frequency operation has lower luminous efficacy. (NEMA, No. 20 at p. 2)

DOE believes there is some confusion concerning the lamp arc wattages and adjustment factor used in the calculation of BLE from BEF. A single BEF standard is more stringent for low frequency systems than for high frequency systems. Therefore, if the low and high frequency system have the same BEF and BF, the quantity lamp arc power divided by ballast input power would be larger for the low frequency system than for the high frequency system. In DOE's conversion technique, multiplication by different reference lamp arc powers results in a higher lamp arc power divided by ballast input power quantity for the low frequency system. However, DOE has defined BLE to include an adjustment factor based on lamp operating frequency. DOE multiplies the quantity lamp arc power divided by ballast input power by the adjustment factor to calculate BLE. This adjustment factor accounts for the difference in lamp efficacy between low and high frequency operation (because lamp efficacy cannot be assessed through electrical measurements of the ballast). Though the BLE corresponding to a low frequency BEF may be smaller than a BLE corresponding to a high frequency BEF, the low-frequency BLE is still more stringent because of the adjustment factor. The adjustment factor allows a single BLE standard to be more stringent for low frequency systems than for high frequency systems, consistent with the implications of a single BEF standard.

NEEA stated that while they understand DOE's proposal (and industry's assertions) with regard to the ability to derive BEF ratings from the proposed BLE ratings, they would like some assurance about the continuing availability of the BEF ratings, and the integrity of whatever values are reported when they are not certified values. The NEEA urged the DOE to establish the appropriate inputs for the calculations of other metrics (*e.g.* BE and BEF) from the measured proposed BLE metric before the new test procedure goes into effect. (NEEA, No. 18 at p. 2) The CA IOUs and NRDC commented that the SNOPR did not contain evidence that DOE has conducted significant testing of ballasts to compare their BEF results with their BLE results to confirm the accuracy of DOE's proposed method for conversions. These organizations recommended that such testing be done before DOE issues the NOPR for ballast efficiency standards. (CA IOUs, No. 19 at p. 2; NRDC, No. 21 at p. 1)

The conversion of BEF to BLE and vice versa was necessary for DOE to confirm that any proposed standards in the standards rulemaking were more stringent than existing standards (*i.e.,* to avoid backsliding), consistent with 42 USC 6295(o)(1). The standards rulemaking will provide more details on DOE's analysis of backsliding. DOE analyzed its BEF to BLE conversion results and presents the comparison in this test procedure final rule. DOE converted the tested BLE data for all of its test ballasts to BEF using the final rule method of conversion and compared the calculated BEF values to measured BEF values. DOE found that the average BEF converted from BLE was 2.3 percent higher than the average tested BEF. The standard deviation of the population of percent differences between converted and tested BEFs was 0.043. DOE believes that the variation around this average can be explained by the expected variation in the BEF test method and the BLE test method. DOE notes that manufacturers and industry members can continue to measure BEF or can develop their own conversion methods for use in lighting design. DOE also understands that NEMA is independently developing its own BLE to BEF conversion technique.

TABLE III.1—BEF CONVERSION METHOD VALIDATION

Average: BLE converted to BEF − Tested BEF	0.033
Average: (BLE converted to BEF − Tested BEF)/Tested BEF	2.3%
Standard deviation: (BLE converted to BEF − Tested BEF)/Tested BEF	0.042

C. Appendix Q1 Test Procedure—Ballast Factor

In the SNOPR, DOE proposed a method for calculating the ballast factor (BF) of a system by dividing the measured lamp arc power on the test ballast by the measured lamp arc power on a reference ballast. In cases where reference ballast operating conditions were unavailable, the SNOPR provided a reference lamp power (specific to the ballast type and operating frequency) from an ANSI standard or from empirical results. The ballast factor measurement was described in detail in section III.D of the SNOPR. Particular lamp and ballast pairings were specified for both the BLE and BF measurements.

Lighting designers commonly use the BF specification to calculate the total system lumen output for their projects. NEEA and the CA IOUs commented that with the proposed test method, calculation of lamp and ballast system lumens by multiplying the rated lamp lumen output by the candidate ballast BF would not be valid for lamps that were rated with a low frequency reference ballast, such as full wattage 4-foot T8s. Both organizations suggested that this problem could be addressed by simultaneously updating the reference ballasts for full wattage T8 lamps to a high frequency ballast but stated that this is probably not possible in this rulemaking because a change in the way rated lamp lumen output is measured would require a new and separate rulemaking. NEEA and the CA IOUs recommended that DOE not change the BF calculation method unless it is able to address the stakeholder concerns. (NEEA, No. 18 at pp. 2–3; CA IOUs, No. 19 at pp. 3–4)

The CA IOUs asked for guidance concerning when a reference ballast should be used to determine BF versus when a number from the proposed Table A (which contains the reference arc power values provided in ANSI C78.81–2010 and IEC 60081 Ed. 5.0) could be used for BF calculation, and requested more information about how the values in the Table A were developed. The CA IOUs also commented that some values in the proposed Table A have two significant digits while others have none, and suggested this be corrected so all values have the same number of significant digits. The CA IOUs suggested DOE conduct research to obtain additional reference ballast operating characteristics at both low and high frequency for key lamp types that are currently lacking this information in ANSI C78.81–2010. This would include high frequency reference ballast operating characteristics for F32T8 lamps. (CA IOUs, No. 19 at p. 4) NRDC supported the CA IOUs' recommendation to find an alternative to Table A. (NRDC, No. 21 at p. 2)

The CA IOUs agreed with DOE that it is important to measure lamp arc power on the test ballast and the reference ballast with the same lamp because of manufacturing variation in the lamps, and commented that using a fixed denominator would unnecessarily decrease the accuracy of the ballast factor test. (CA IOUs, No. 19 at p. 4) NEEA and the CA IOUs expressed concern that the proposed test procedure introduces variability by forcing a comparison of measured test values against fixed integer reference

lamp arc values in the proposed Table A. (CA IOUs, No. 19 at p. 4) NEEA commented that this seemed incongruous with DOE's goal of reducing testing variability. NEEA also pointed out that DOE had itself expressed reservations about the procedure and agreed with DOE's preference for measuring lamp arc power under both reference and test ballast/lamp conditions. (NEEA, No. 18 at pp. 2–3)

NEMA disagreed with NEEA and the CA IOUs, expressing concern about DOE's proposal to have BF equal the ratio of measured lamp arc powers on test and reference ballasts, stating that ballasts will respond to each lamp differently because every lamp has a characteristic power output. NEMA also commented that determining a reference lamp by light output and not a predetermined wattage introduces photometric variation, and suggested use of a predetermined wattage to give a BF of one from which everything should be determined. NEMA commented that if a center point wattage across all manufacturers' lamps were found, it should be the value used for BF equal to one. NEMA suggested this wattage could be 29 W for a full-wattage 32 W T8 lamp operated on a high frequency electronic ballast. NEMA recognized that variations in reference lamp parameters will affect BF calculations in some cases, but stated that the error introduced into a BF calculation by the variations should not be enough to influence which classification a ballast design falls into. (NEMA, No. 20 at p. 3)

The CA IOUs expressed concern that DOE's proposal to change the way BF is calculated has not been adequately vetted by the lighting industry. The CA IOUs commented on the lack of evidence that DOE has conducted significant testing to compare the proposed ballast factor correction method with the current one, and suggested DOE conduct the testing and publish the results to demonstrate the impacts of the new procedure. (CA IOUs, No. 19 at p. 3) The CA IOUs also commented that significant change to the ballast factor metric could affect its utility in lighting design, and recommended that DOE schedule a public meeting in early 2011 to discuss this issue. NEEA stated that lighting designers, who will be the most affected by the ballast factor calculation change, have not been sufficiently included in the discussion. NEEA and the CA IOUs suggested that DOE consult representatives of the International Association of Lighting Designers (IALD) and the Illuminating Engineering Society of North America (IESNA). (NEEA, No. 18 at p. 3; CA IOUs, No 19 at p. 3)

DOE believes there may have been some misunderstanding of the SNOPR BF calculation method. If a candidate ballast operates at high frequency, then a high frequency reference arc power value would be used to calculate ballast factor. If the candidate ballast operates at low frequency, then a low frequency reference lamp arc power value would be used. In addition, DOE proposed that if ANSI C78.81 provided reference ballast operating conditions at the same frequency as the candidate ballast, then the reference lamp arc power value could be measured directly. Based on these proposals, reference lamp arc power values always correspond to the same operating frequency as the candidate ballast. Nevertheless, in the fluorescent lamp ballast standards NOPR, DOE proposed a new product class structure that no longer makes use of BF. (76 FR 20090, April 11, 2011) In this final rule, therefore, DOE is not prescribing a BF measurement methodology. DOE notes that manufacturers and industry members can continue to measure BF using their preferred methods depending on the demands of the market and industry.

D. Appendix Q1 Test Procedure—Requirements

1. Test Conditions

In the SNOPR, DOE proposed that testing be conducted at 25 degrees Celsius ± 2.0 degrees and in a draft-free environment according to ANSI C78.375–1997.[2] These conditions provide for mostly uniform electrical operating characteristics for the lamp-and-ballast system. In addition, DOE proposed that ballasts be tested using the electrical supply characteristics found in section 4 of ANSI C82.2–2002 with the following changes: (1) Ballasts capable of operating at a single voltage would be tested at the rated ballast input voltage; (2) users of universal voltage ballasts would disregard the input voltage directions in section 4.1 of ANSI C82.2–2002 that indicate a ballast capable of operating at multiple voltages should be tested at both the lowest and highest USA design center voltage; and (3) manufacturers use particular revisions to the normative references associated with ANSI C82.2–2002 (see section III.D.6 for additional detail). Instead of testing universal voltage ballasts at the voltages indicated in ANSI C82.2–2002, DOE proposed that testing ballasts at a single voltage would be more appropriate and less burdensome. DOE noted that 277 V is the most common input voltage for commercial ballasts and that 120 V is the most common for residential ballasts and commercial cold-temperature outdoor sign ballasts. Therefore, DOE proposed that all universal voltage commercial ballasts be tested at 277 V and that universal voltage residential and commercial cold-temperature outdoor sign ballasts be tested at 120 V.

The CA IOUs approved of DOE's proposal that the BLE calculation for universal voltage commercial ballasts be based on testing at 277 volts and testing of universal voltage residential ballasts and outdoor cold temperature sign ballasts be conducted at 120 volts. They believe this will add clarity to the test procedure because the value reported for compliance purposes is now specified. However, the CA IOUs commented that manufacturers of universal voltage ballasts should be required to publish input wattage for operation at both the upper and lower range of universal voltage ballasts in their product literature because some commercial spaces have 120 volt service in significant portions of the building, such as bathrooms. Since input watts can vary by one to two watts depending on the voltage, the CA IOUs believe it would be useful in lighting design to consider input watts at both 277 and 120 volts. (CA IOUs, No. 19 at pp. 2–3)

Because DOE has not received adverse comment to its test conditions proposal in the SNOPR, the test condition requirements for this final rule are unchanged. With regards to the comment concerning the publication of input wattage for operation at both the upper and lower range of universal voltage ballasts, the Federal Trade Commission has statutory authority to establish labeling requirements for fluorescent lamp ballasts. Manufacturers are also prohibited from making any representation regarding the energy efficiency of a product unless the product has been tested according to the DOE test procedure and the representation fairly discloses the results of such testing. (42 U.S.C. 6293(c)).

2. Test Setup

NEEA, the CA IOUs, and NRDC supported the proposed method of test wiring for programmed and rapid start ballasts without cathode cut-out. These organizations concurred with DOE's observation that the proposed procedure isolates lamp arc voltage by capturing heating energy in the input power measurement, but not in the output

[2] "American National Standard for Fluorescent Lamps—Guide for Electrical Measurements," approved September 25, 1997.

power measurement, and will appropriately measure the relative efficiency of ballasts with cathode heating. (NEEA, No. 18 at p. 2; CA IOUs, No. 19 at p. 2; and NRDC, No. 21 at p. 2) Based on the comments received in support of the SNOPR test setup proposal, the setup required in the final rule does not change.

DOE is adding one clarification to its SNOPR setup proposal with regards to the lamp type paired with sign ballasts. In the SNOPR, DOE proposed that all ballasts, including sign ballasts, be tested with the most common wattage lamp typically used with that ballast type. For sign ballasts, DOE identified 110 W 8-foot T12 lamps and 86 W 8-foot T8 lamps as being the most common. However, DOE notes that some sign ballasts are capable of operating both T12 and T8 lamps. Based on interviews with manufacturers, DOE believes the T12 lamp pairing is the most common. Therefore, in the final rule, sign ballasts capable of operating T12 and T8 lamps shall be paired with a 110 W 8-foot T12 lamp for the purposes of determining compliance with energy conservation standards. Sign ballasts capable of only operating T8 or only T12 lamps shall be operated with the diameter lamp they are designed to operate.

3. Test Method

The test method required in the final rule is unchanged from the SNOPR proposal. Once the lamp-and-ballast system is connected and attached to the measurement instrumentation, the ballast must operate a fluorescent lamp for a minimum of fifteen minutes to a maximum of one hour until stability is reached. Measurements of lamp arc voltage, lamp arc current, and lamp arc power must be taken every one second during the stabilization period. Once the percent difference between the minimum and maximum values for voltage, current, and power do not exceed one percent over a four minute moving window, the system is considered stable. Allowing the lamp and ballast system to reach its steady state operating point will provide a more accurate assessment of ballast performance in the field. If the system does not stabilize, a new ballast sample is selected and the test is repeated.

After the system has stabilized, the measured input parameters are voltage (RMS [3]), current (RMS), power, and power factor measured in accordance with ANSI C82.2–2002. The measured output parameters include lamp arc voltage, current, and power. Lamp arc current and voltage measurements are taken at the specified locations according to the test setup. Frequency of the output waveform delivered to the lamp by the ballast is also measured.

NEMA commented that a text correction is needed on page 71578 of the SNOPR, in the section describing lamp arc voltage measurement in the test circuit setup. DOE stated that during lamp arc voltage measurement, it is assumed the arc begins near the center of the ballast cathodes. The sentence should read: "The voltage divider would provide a position in the circuit to measure the lamp arc voltage assuming the arc begins near the center of the lamp (instead of ballast) cathodes." (NEMA, No. 20 at p. 4) DOE agrees with NEMA that the sentence should have referenced lamp cathodes rather than ballast cathodes.

4. Calculations

As described in Equation 1 below, ballast luminous efficiency is equal to total lamp arc power, divided by ballast input power, multiplied by 100, and then multiplied by a lamp operating frequency correction factor (β).

$$\text{Ballast Luminous Efficiency}\ (\%) = \frac{\text{Total Lamp Arc Power}}{\text{Ballast Input Power}} \times 100 \times \beta$$

$$\text{Ballast Luminous Efficiency}\ (\%) = \frac{\text{Total Lamp Arc Power}}{\text{Ballast Input Power}} \times 100 \times \beta$$

Equation 1

In the SNOPR, DOE proposed that the symbol β be equal to 0.9 for low-frequency ballasts and equal to 1.0 for high-frequency ballasts. NEMA commented that because the 0.9 correction factor for low frequency ballasts is based on the IESNA handbook reference to F40T12 lamps, it should not be applied broadly to all lamp types. The 10 percent gain for the F40T12 is due to a decrease in "end losses" and an increase in column efficacy due to a lower operating power. NEMA commented that the proportional gain in efficacy due to decreased "end losses" will be different for different lamp types because of differences in column voltage. Additionally, the increase in column efficacy from a reduction in column power may not apply to all other lamps. NEMA stated that it would submit additional comments after it had time to verify if a 0.93 correction factor would be appropriate for T8 lamps, and that no correction factor should be needed for T5 lamps because they are designed only for high frequency operation. DOE did not receive these additional comments from NEMA on appropriate frequency adjustment factors. Finally, NEMA stated that for ballasts meeting ANSI C82.11 and C82.1, there should be no other appreciable effect on fluorescent lamp efficacy from lamp current crest factor, wave form, and lamp operating frequency. (NEMA, No. 20 at pp. 2–3)

The CA IOUs and NRDC stated that DOE's proposal to apply a factor of 0.9 to the efficiency measurements of low frequency ballasts is an acceptable proxy for light measurements to assess the benefits of high frequency operation. The CA IOUs commented that they do not have data to indicate that the variation in lamp light output due to variations in crest factor or wave shape during high frequency operation is significant. (CA IOUs, No. 19 at p. 2 and NRDC, No. 21 at p. 2)

In light of NEMA's comments, DOE establishes different low frequency correction factors for the different lamp types operated by ballasts within the scope of this final rule. DOE believes that these factors more accurately represent the difference in arc power between high frequency and low frequency operation for the same light output. The adjustment factor is equal to high frequency lamp arc power divided by low frequency lamp arc power—specific to each lamp type. DOE used ANSI lamp data when available and empirical data when it was not. To derive correction factors for when ANSI lamp data is unavailable for both high and low frequency, DOE operated a lamp using the ANSI reference ballast settings at the given rating frequency (either high or low frequency) and recorded the light output. DOE then switched the same lamp to a reference ballast of the frequency type not provided by ANSI and adjusted the ballast settings to match the light output

[3] Root mean square (RMS) voltage is a statistical measure of the magnitude of a voltage signal. RMS voltage is equal to the square root of the mean of all squared instantaneous voltages over one complete cycle of the voltage signal.

with the output obtained using the first ballast. DOE recorded the lamp arc power once the light output was matched.

TABLE III.2—FREQUENCY ADJUSTMENT FACTORS

Ballast type	Nominal lamp wattage	Lamp diameter and base	Frequency adjustment factor	
			Low-frequency	High-frequency
Ballasts that operate straight-shaped lamps (commonly referred to as 4-foot medium bipin lamps) with medium bipin bases and a nominal overall length of 48 inches.	32	T8 MBP	0.94	1.0
	34	T12 MBP	*0.93	1.0
Ballasts that operate U-shaped lamps (commonly referred to as 2-foot U-shaped lamps) with medium bipin bases and a nominal overall length between 22 and 25 inches.	32	T8 MBP	0.94	1.0
	34	T12 MBP	*0.93	1.0
Ballasts that operate rapid-start lamps (commonly referred to as 8-foot high output lamps) with recessed double contact bases and a nominal overall length of 96 inches.	86	T8 HO RDC	*0.92	1.0
	95	T12 HO RDC	*0.94	1.0
Ballasts that operate instant-start lamps (commonly referred to as 8-foot slimline lamps) with single pin bases and a nominal overall length of 96 inches.	59	T8 slimline SP	0.95	1.0
	60	T12 slimline SP	*0.94	1.0
Ballasts that operate straight-shaped lamps (commonly referred to as 4-foot miniature bipin standard output lamps) with miniature bipin bases and a nominal length between 45 and 48 inches.	28	T5 SO Mini-BP	*0.95	1.0
Ballasts that operate straight-shaped lamps (commonly referred to as 4-foot miniature bipin high output lamps) with miniature bipin bases and a nominal length between 45 and 48 inches.	54	T5 HO Mini-BP	*0.95	1.0
Ballasts that operate rapid-start lamps (commonly referred to as 8-foot high output lamps) with recessed double contact bases, a nominal overall length of 96 inches, and that operate at ambient temperatures of 20 °F or less and are used in outdoor signs.	86	T8 HO RDC	*0.92	1.0
	110	T12 HO RDC	*0.94	1.0

MBP, Mini-BP, RDC, and SP represent medium bipin, miniature bipin, recessed double contact, and single pin, respectively.
* Empirically derived.

5. Updates to Existing Test Procedure

DOE is not changing the proposed updates to the existing test procedure from the SNOPR in this final rule. DOE is updating the references to ANSI standards for the existing light-output-based test procedure. DOE is using the most recent versions of these standards, namely ANSI C82.2–2002, ANSI C82.11–2002 [4], and ANSI C82.1–2004. The amendments to the existing test procedure in Appendix Q to Subpart B of 10 CFR part 430 will be effective 30 days after publication of the test procedure final rule.

6. Normative References for ANSI C82.2–2002

DOE is not changing its proposals regarding the specification of normative references to be used with ANSI C82.2–2002 from the SNOPR in this final rule. DOE is amending the existing fluorescent lamp ballast test procedure in Appendix Q to incorporate references to ANSI C82.2–2002 and including references to ANSI C82.2–2002 in the new appendix Q1. In examining the ANSI standard, DOE found that within ANSI C82.2–2002, there are references to other ANSI standards. In particular, section 2 of ANSI C82.2–2002 states that "when American National Standards referred to in this document [ANSI C82.2–2002] are superseded by a revision approved by the American National Standards Institute, Inc. the revision shall apply." Revisions to these normative standards could potentially impact compliance with energy conservation standards by changing the tested value for energy efficiency. Therefore, DOE is specifying the particular versions of the ANSI standards that will be used in conjunction with ANSI C82.2–2002. DOE is using ANSI C78.81–2010, ANSI C82.1–2004, ANSI C82.11–2002, and ANSI C82.13–2002 in support of ANSI C82.2–2002. All other normative references are as directly specified in ANSI C82.2–2002. These specifications will apply to the ANSI C82.2–2002 references in Appendix Q and to the ANSI C82.2–2002 references in Appendix Q1.

E. Burden To Conduct the Test Procedure

EPCA requires that any test procedures prescribed or amended under this section be reasonably designed to produce test results that measure energy efficiency, energy use or estimated annual operating cost of a covered product during a representative average use cycle or period of use. Test procedures must also not be unduly burdensome to conduct." (42 U.S.C. 6293(b)(3)). Today's final test procedure measures the performance of a ballast by computing the ratio of lamp arc power to ballast input power and adjusting for lamp operating frequency. The test procedure is less burdensome than the existing procedure largely because of the simplicity of electrical measurements compared to photometric measurements. In addition, the lamp loads are less expensive than precision resistor loads proposed in the NOPR and are already a common item used in test facilities. The assessment of testing burden is discussed in more detail with reference to small businesses in section IV.B. NEEA commented that it was

[4] "American National Standards for Lamp Ballasts—High Frequency Lamp Ballasts—Supplements," approved January 17, 2002.

pleased with the basics of the proposed test procedure and supported a test procedure that does not unduly burden manufacturers. (NEEA, No. 18 at p. 1)

To further ensure that the test procedure in this final rule is not unduly burdensome to conduct, DOE is not changing the minimum sample size (four) for generating a reported value or to the reported value itself. Currently, to demonstrate compliance with energy conservation standards, manufacturers must first test four examples of the basic model. The reported value of BLE is then equal to either the lower 99% confidence interval limit divided by 0.99 or the mean of the four values, whichever is smaller.

F. Impact on Measured Energy Efficiency

In any rulemaking to amend a test procedure, DOE must determine whether the proposed test procedure would alter the measured energy efficiency of any covered product as determined under the existing test procedure. (42 U.S.C. 6293(e)(1)) If DOE determines that the amended test procedure would alter the measured efficiency of a covered product, DOE must amend the applicable energy conservation standard accordingly. (42 U.S.C. 6293(e)(2)) This final rule active mode test procedure changes the metric used to describe the energy efficiency of a ballast. DOE is currently amending energy conservation standards for fluorescent lamp ballasts in the standards rulemaking. In that rulemaking, DOE is considering standards based on the measured efficiency of the ballast in accordance with the test procedure prescribed in this active mode test procedure rulemaking. The BLE test procedure final rule will not affect compliance with existing energy conservation standards because manufacturers will not be required to use the new test procedure until the date manufacturers are required to comply with any amended standards.

G. Scope of Applicability

Today's test procedure final rule is applicable to the fluorescent lamp ballasts covered in the proposed scope of coverage outlined in the fluorescent lamp ballast standard NOPR, which includes ballasts that operate F32T8, F34T12, F28T5SO, F54T5HO, F96T8/ES, F96T12/ES, F96T8HO, F96T12HO/ES, and F96T12HO lamps. 76 FR 20090 (April 11, 2011). These ballasts can operate between one and six lamps and are used in commercial, residential, and cold-temperature outdoor sign applications. For the test procedure in this rulemaking, DOE is establishing particular test setups and calculations depending on type of ballast, as described in more detail in section III.D. For example, DOE is specifying certain fluorescent lamps and numbers of these lamps to be paired with certain ballasts for determining ballast performance.

H. Certification and Enforcement

In the test procedure SNOPR, DOE proposed the measurement of BLE using electrical measurements of a lamp and ballast system. DOE believes this test procedure to be clearer and less burdensome to conduct compared to the existing method which may result in increased compliance. DOE also proposed that test facilities conducting compliance testing in accordance with amended standards promulgated by the ongoing standards rulemaking be National Volunteer Laboratory Accreditation Program (NVLAP) accredited, a program administered by the National Institute of Standards and Technology (NIST), or accredited by an organization recognized by NVLAP.

NVLAP accreditation is a finding of laboratory competence, certifying that a laboratory operates in accordance with NVLAP management and technical requirements. The NVLAP program is described in 15 CFR part 285, and encompasses the requirements of ISO/IEC 17025.[5] NVLAP (or an organization recognized by NVLAP) accreditation is currently required for laboratories providing certification and compliance data for general service fluorescent, general service incandescent, and incandescent reflector lamps. In the SNOPR, DOE stated that either of these accreditation requirements would ensure that all the data DOE uses in its rulemaking comes from standardized and quality controlled sources, increasing confidence in the precision of the data and limiting variations due to differences between testing laboratories. DOE determined that NVLAP imposes fees of $9000 and $8000 on years one and two of accreditation. For the years following, the fees alternate between $5000 and $8000, with the $8000 fee corresponding to the on-site evaluation required every other year. Fees for other accreditation organizations are expected to be similar. DOE invited comment on the benefits and burden imposed by the requirement that certification and compliance data come from an NVLAP or NVLAP recognized organization accredited laboratory.

NEMA agreed with DOE that there should be an accreditation requirement for laboratories generating certification and compliance data, but does not believe NVLAP accreditation or recognition should be the only option. NEMA recommended that the accreditation requirements should read: "Laboratory accreditation is by ISO17025 accreditation on ballast energy efficiency procedures such as Underwriter Laboratories, Council of Canada, etc * * *" (NEMA, No. 20 at p. 4).

NEEA and NRDC strongly supported the proposed requirement that all certification and compliance testing be done at NVLAP accredited or recognized laboratories to establish a testing regime that will produce accurate and repeatable results. (NEEA, No. 18 at p. 4 and NRDC, No. 21 at p. 2) The CA IOUs also agreed with DOE, noting that the overwhelming majority of ballasts tested by DOE showed significantly higher measured BEFs than their reported catalog values. The CA IOUs believe that requiring testing from accredited third party labs will help ensure testing consistency. (CA IOUs, No. 19 at p. 5) Earthjustice agreed with DOE that requiring NVLAP accreditation or recognition for labs that do certification and compliance data will increase the integrity of test data, adding that this requirement is especially important given DOE's proposal to allow manufacturers to manufacture and test their own products. Earthjustice believes that the benefits of the requirement outweigh any potential burdens because the added per-unit cost would be a negligible fraction of a penny. (Earthjustice, No. 22 at p. 1)

In this final rule, DOE is amending the laboratory accreditation requirements to be by ISO17025 accreditation on ballast energy efficiency procedures. Accreditation must be done by NVLAP or a NVLAP-recognized organization, Underwriter Laboratories, or Council of Canada. DOE invites interested parties to suggest whether organizations should be added or removed from the list of accepted accrediting bodies which could be incorporated in a future test procedure amendment. During manufacturer interviews, DOE learned that gaining NVLAP accreditation could take between six months and two years. This final rule imposes laboratory accreditation requirements only for compliance testing using Appendix Q1.

[5] International Organization for Standardization/International Electrotechnical Commission, *General requirements for the competence of testing and calibration laboratories.* ISO/IEC 17025.

IV. Procedural Issues and Regulatory Review

A. Review Under Executive Order 12866

The Office of Management and Budget has determined that test procedure rulemakings do not constitute "significant regulatory actions" under section 3(f) of Executive Order 12866, Regulatory Planning and Review, 58 FR 51735 (Oct. 4, 1993). Accordingly, this action was not subject to review under the Executive Order by the Office of Information and Regulatory Affairs (OIRA) in the Office of Management and Budget (OMB).

B. Review Under the Regulatory Flexibility Act

The Regulatory Flexibility Act (5 U.S.C. 601 *et seq.*) requires preparation of an initial regulatory flexibility analysis (IFRA) for any rule that by law must be proposed for public comment, unless the agency certifies that the rule, if promulgated, will not have a significant economic impact on a substantial number of small entities. As required by Executive Order 13272, "Proper Consideration of Small Entities in Agency Rulemaking," 67 FR 53461 (August 16, 2002), DOE published procedures and policies on February 19, 2003, to ensure that the potential impacts of its rules on small entities are properly considered during the DOE rulemaking process. 68 FR 7990. DOE has made its procedures and policies available on the Office of the General Counsel's Web site: *http://www.gc.doe.gov.*

DOE certified to the Office of Advocacy of the Small Business Administration (SBA) that the proposed test procedure for ballasts would not have a significant economic impact on a substantial number of small entities, and updated that certification in the SNOPR. The factual basis for that certification is as follows:

The SBA has set a size threshold for manufacturers of fluorescent lamp ballasts that defines those entities classified as "small businesses" for the purposes of the Regulatory Flexibility Analysis. DOE used the SBA's small business size standards to determine whether any small manufacturers of fluorescent lamp ballasts would be subject to the requirements of the rule. 65 FR 30836, 30850 (May 15, 2000), as amended at 65 FR 53533, 53545 (September 5, 2000) and codified at 13 CFR part 121. The size standards are listed by North American Industry Classification System (NAICS) code and industry description and are available at *http://www.sba.gov/idc/groups/public/documents/sba_homepage/serv_sstd_tablepdf.pdf.* Fluorescent lamp ballast manufacturing is classified under NAICS 335311, "Power, Distribution, & Specialty Transformer Manufacturing." The SBA sets a threshold of 750 employees or less for an entity to be considered as a small business for this category.

To identify potential small manufacturers as defined by SBA, DOE conducted a market survey using all available public information. DOE's research involved several industry trade association membership directories, product databases, individual company Web sites, and marketing research tools (*e.g.,* Dun and Bradstreet reports) to create a list of every company that manufactures or sells fluorescent lamp ballasts covered by this rulemaking. DOE reviewed all publicly-available data and contacted companies on its list, as necessary, to determine whether they met the SBA's definition of a small business manufacturer of covered fluorescent lamp ballasts. DOE screened out companies that did not offer fluorescent lamp ballasts covered by this rulemaking, did not meet the definition of a "small business," or are foreign owned and operated. Ultimately, DOE identified approximately 10 fluorescent lamp ballast manufacturers that produce covered fluorescent lamp ballasts and can potentially be considered small businesses out of the at least 54 ballast manufacturers identified in the fluorescent lamp ballast standards NOPR.

The final rule includes revisions to appendix Q and a new appendix Q1. The revisions to appendix Q update an industry reference and do not change the test method or increase testing burden. The only difference between the two test procedures relates to the interference of testing instrumentation. Specifically, the input power measurement of ANSI C82.2–2002 reduces the interference of instrumentation on the input power measurement as compared to ANSI C82.2–1984. The vast majority of companies and testing facilities, however, already employ modern instrumentation that does not significantly interfere with input power measurements. Thus, updating this industry reference would not impose additional financial burden in terms of labor or materials. As described in more detail in section III.D, the amended test procedure for appendix Q1 is generally less burdensome compared to the existing test procedure, while reducing measurement variation. This procedure uses only electrical measurements which are generally simpler and more quickly carried out than photometric measurements. The final test procedure only uses a reference ballast once every 24 hours, rather than during the performance evaluation of each individual ballast. This change reduces the number of measurements necessary for assigning a BLE to a ballast compared to the number of measurements necessary for BEF under the existing test procedure. In addition, the final test method specifies a shorter lamp seasoning period (12 hours versus 100 hours) because the lamp's electrical characteristics stabilize sooner than its photometric characteristics.

To analyze the testing burden impacts described above on small business manufacturers, DOE first sought to examine publically available financial data for those companies identified as small businesses to compare the estimated revenue and profit of these businesses to the anticipated testing burden associated with this final test procedure. In the SNOPR, DOE determined that all the identified small business manufacturers were privately owned, and as a result, financial data was not publically available. DOE estimates that the incremental testing costs for an average small business would be no more and likely less than testing costs under the existing BEF test procedure for the reasons set forth in the following paragraph.

The BLE procedure requires no additional equipment compared to the existing test procedure and eliminates the usage of photocells or an integrating sphere. In addition, the existing BEF test procedure requires measurements of lamp light output on a reference ballast and measurements on a test ballast during each test. Light output measurements and electrical measurements of the reference system can require one to two hours depending on the number of reference ballasts available and the speed at which the lamp reaches photometric stability. Light output and electrical measurements of the test ballast are taken immediately after switching the lamps from the reference to the test system. In contrast, the BLE procedure in this final rule requires the reference lamps to be measured and stabilized on a reference ballast only once every twenty four hours. After this stabilization, subsequent testing of the ballasts of interest can take between 15 and 60 minutes. In the SNOPR, DOE estimated that between 4 and 8 ballast samples could be completed in an eight hour period using the existing BEF test procedure, while between 8 and 16 tests could be completed using the BLE test procedure. Therefore, DOE estimated the BLE procedure could result in an

incremental reduction in testing time of about 50%. Assuming the labor rate for carrying out either procedure is $100 per hour, the BLE procedure could reduce testing costs by $50 to $100 dollars per test. DOE noted that depending on setup, some facilities may see less of a reduction in testing time or potentially no change in testing time. Finally, as presented in the SNOPR, DOE believes the cost of test laboratory accreditation is approximately $8000 per year, which DOE believes would not be a significant impact.

On the basis of the foregoing, DOE concluded that this final rule would not have a significant impact on a substantial number of small entities. Accordingly, DOE has not prepared a regulatory flexibility analysis for this rulemaking. DOE has provided its certification and supporting statement of factual basis to the Chief Counsel for Advocacy of the Small Business Administration for review under 5 U.S.C. 605(b).

C. Review Under the Paperwork Reduction Act of 1995

Manufacturers of fluorescent lamp ballasts must certify to DOE that their product complies with any applicable energy conservation standard. In certifying compliance, manufacturers must test their product according to the DOE test procedure for fluorescent lamp ballasts, including any amendments adopted for that test procedure. DOE has proposed regulations for the certification and recordkeeping requirements for all covered consumer products and commercial equipment, including fluorescent lamp ballasts. 75 FR 56796 (Sept. 16, 2010). The collection-of-information requirement for the certification and recordkeeping has been approved by OMB under control number 1910–1400. As described in the NOPR, the public reporting burden for the certification is estimated to average 20 hours per response, including the time for reviewing instructions, searching existing data sources, gathering and maintaining the data needed, and completing and reviewing the collection of information.

Public comment is sought regarding: whether this proposed collection of information is necessary for the proper performance of the functions of the agency, including whether the information shall have practical utility; the accuracy of the burden estimate; ways to enhance the quality, utility, and clarity of the information to be collected; and ways to minimize the burden of the collection of information, including through the use of automated collection techniques or other forms of information technology. Send comments on these or any other aspects of the collection of information to Tina Kaarsberg (see **ADDRESSES**) and by e-mail to *Christine_J._Kymn@omb.eop.gov*.

Notwithstanding any other provision of the law, no person is required to respond to, nor shall any person be subject to a penalty for failure to comply with, a collection of information subject to the requirements of the PRA, unless that collection of information displays a currently valid OMB Control Number.

D. Review Under the National Environmental Policy Act of 1969

In this final rule, DOE amends its test procedure for fluorescent lamp ballasts. DOE has determined that this rule falls into a class of actions that are categorically excluded from review under the National Environmental Policy Act of 1969 (42 U.S.C. 4321 *et seq.*) and DOE's implementing regulations at 10 CFR part 1021. Specifically, this rule amends an existing rule without affecting the amount, quality or distribution of energy usage, and, therefore, will not result in any environmental impacts. Thus, this rulemaking is covered by Categorical Exclusion A5 under 10 CFR part 1021, subpart D, which applies to any rulemaking that interprets or amends an existing rule without changing the environmental effect of that rule. Accordingly, neither an environmental assessment nor an environmental impact statement is required.

E. Review Under Executive Order 13132

Executive Order 13132, "Federalism," 64 FR 43255 (August 4, 1999) imposes certain requirements on agencies formulating and implementing policies or regulations that preempt State law or that have Federalism implications. The Executive Order requires agencies to examine the constitutional and statutory authority supporting any action that would limit the policymaking discretion of the States and to carefully assess the necessity for such actions. The Executive Order also requires agencies to have an accountable process to ensure meaningful and timely input by State and local officials in the development of regulatory policies that have Federalism implications. On March 14, 2000, DOE published a statement of policy describing the intergovernmental consultation process it will follow in the development of such regulations. 65 FR 13735. DOE examined this final rule and determined that it will not have a substantial direct effect on the States, on the relationship between the national government and the States, or on the distribution of power and responsibilities among the various levels of government. EPCA governs and prescribes Federal preemption of State regulations as to energy conservation for the products that are the subject of today's final rule. States can petition DOE for exemption from such preemption to the extent, and based on criteria, set forth in EPCA. (42 U.S.C. 6297(d)) No further action is required by Executive Order 13132.

F. Review Under Executive Order 12988

Regarding the review of existing regulations and the promulgation of new regulations, section 3(a) of Executive Order 12988, "Civil Justice Reform," 61 FR 4729 (Feb. 7, 1996), imposes on Federal agencies the general duty to adhere to the following requirements: (1) Eliminate drafting errors and ambiguity; (2) write regulations to minimize litigation; (3) provide a clear legal standard for affected conduct rather than a general standard; and (4) promote simplification and burden reduction. Section 3(b) of Executive Order 12988 specifically requires that Executive agencies make every reasonable effort to ensure that the regulation: (1) Clearly specifies the preemptive effect, if any; (2) clearly specifies any effect on existing Federal law or regulation; (3) provides a clear legal standard for affected conduct while promoting simplification and burden reduction; (4) specifies the retroactive effect, if any; (5) adequately defines key terms; and (6) addresses other important issues affecting clarity and general draftsmanship under any guidelines issued by the Attorney General. Section 3(c) of Executive Order 12988 requires Executive agencies to review regulations in light of applicable standards in sections 3(a) and 3(b) to determine whether they are met or it is unreasonable to meet one or more of them. DOE has completed the required review and determined that, to the extent permitted by law, this final rule meets the relevant standards of Executive Order 12988.

G. Review Under the Unfunded Mandates Reform Act of 1995

Title II of the Unfunded Mandates Reform Act of 1995 (UMRA) requires each Federal agency to assess the effects of Federal regulatory actions on State, local, and Tribal governments and the private sector. Public Law 104–4, sec. 201 (codified at 2 U.S.C. 1531). For a regulatory action resulting in a rule that may cause the expenditure by State, local, and Tribal governments, in the

aggregate, or by the private sector of $100 million or more in any one year (adjusted annually for inflation), section 202 of UMRA requires a Federal agency to publish a written statement that estimates the resulting costs, benefits, and other effects on the national economy. (2 U.S.C. 1532(a), (b)) The UMRA also requires a Federal agency to develop an effective process to permit timely input by elected officers of State, local, and Tribal governments on a proposed "significant intergovernmental mandate," and requires an agency plan for giving notice and opportunity for timely input to potentially affected small governments before establishing any requirements that might significantly or uniquely affect small governments. On March 18, 1997, DOE published a statement of policy on its process for intergovernmental consultation under UMRA. 62 FR 12820; also available at *http://www.gc.doe.gov*. DOE examined today's final rule according to UMRA and its statement of policy and determined that the rule contains neither an intergovernmental mandate, nor a mandate that may result in the expenditure of $100 million or more in any year, so these requirements do not apply.

H. Review Under the Treasury and General Government Appropriations Act, 1999

Section 654 of the Treasury and General Government Appropriations Act, 1999 (Pub. L. 105–277) requires Federal agencies to issue a Family Policymaking Assessment for any rule that may affect family well-being. Today's final rule will not have any impact on the autonomy or integrity of the family as an institution. Accordingly, DOE has concluded that it is not necessary to prepare a Family Policymaking Assessment.

I. Review Under Executive Order 12630

DOE has determined, under Executive Order 12630, "Governmental Actions and Interference with Constitutionally Protected Property Rights" 53 FR 8859 (March 18, 1988), that this regulation will not result in any takings that might require compensation under the Fifth Amendment to the U.S. Constitution.

J. Review Under Treasury and General Government Appropriations Act, 2001

Section 515 of the Treasury and General Government Appropriations Act, 2001 (44 U.S.C. 3516 note) provides for agencies to review most disseminations of information to the public under guidelines established by each agency pursuant to general guidelines issued by OMB. OMB's guidelines were published at 67 FR 8452 (Feb. 22, 2002), and DOE's guidelines were published at 67 FR 62446 (Oct. 7, 2002). DOE has reviewed today's final rule under the OMB and DOE guidelines and has concluded that it is consistent with applicable policies in those guidelines.

K. Review Under Executive Order 13211

Executive Order 13211, "Actions Concerning Regulations That Significantly Affect Energy Supply, Distribution, or Use," 66 FR 28355 (May 22, 2001), requires Federal agencies to prepare and submit to OMB, a Statement of Energy Effects for any significant energy action. A "significant energy action" is defined as any action by an agency that promulgated or is expected to lead to promulgation of a final rule, and that: (1) Is a significant regulatory action under Executive Order 12866, or any successor order; and (2) is likely to have a significant adverse effect on the supply, distribution, or use of energy; or (3) is designated by the Administrator of OIRA as a significant energy action. For any significant energy action, the agency must give a detailed statement of any adverse effects on energy supply, distribution, or use if the regulation is implemented, and of reasonable alternatives to the action and their expected benefits on energy supply, distribution, and use.

Today's regulatory action is not a significant regulatory action under Executive Order 12866. Moreover, it would not have a significant adverse effect on the supply, distribution, or use of energy, nor has it been designated as a significant energy action by the Administrator of OIRA. Therefore, it is not a significant energy action, and, accordingly, DOE has not prepared a Statement of Energy Effects.

L. Review Under Section 32 of the Federal Energy Administration Act of 1974

Under section 301 of the Department of Energy Organization Act (Pub. L. 95–91; 42 U.S.C. 7101), DOE must comply with section 32 of the Federal Energy Administration Act of 1974, as amended by the Federal Energy Administration Authorization Act of 1977. (15 U.S.C. 788; FEAA) Section 32 essentially provides in relevant part that, where a proposed rule authorizes or requires use of commercial standards, the notice of proposed rulemaking must inform the public of the use and background of such standards. In addition, section 32(c) requires DOE to consult with the Attorney General and the Chairman of the Federal Trade Commission (FTC) concerning the impact of the commercial or industry standards on competition.

This final test procedure incorporates testing methods contained in the following commercial standards: ANSI C78.81–2010, Revision of ANSI C78.81–2005 ("ANSI C78.81–2010"), American National Standard for Electric Lamps—Double-Capped Fluorescent Lamps—Dimensional and Electrical Characteristics; ANSI C82.1–2004, Revision of ANSI C82.1–1997 ("ANSI C82.1"), American National Standard for Lamp Ballast—Line-Frequency Fluorescent Lamp Ballast; ANSI C82.2–2002, Revision of ANSI C82.2–1994 (R1995), American National Standard for Lamp Ballasts-Method of Measurement of Fluorescent Ballasts; ANSI C82.11–2002, Revision of ANSI C82.11–1993 ("ANSI C82.11"), American National Standard for Lamp Ballasts—High-frequency Fluorescent Lamp Ballasts; ANSI C82.13–2002 ("ANSI C82.13"), American National Standard for Lamp Ballasts—Definitions for Fluorescent Lamps and Ballasts; ANSI C78.375–1997, Revision of ANSI C78.375–1991 ("ANSI C78.375"), American National Standard for Fluorescent Lamps—Guide for Electrical Measurements, first edition; ANSI C82.3–2002, Revision of ANSI C82.3–1983 (R 1995) ("ANSI C82.3"), American National Standard for Reference Ballasts for Fluorescent Lamps. DOE has evaluated these standards and was unable to conclude whether they fully comply with the requirements of section 32(b) of the FEAA (*i.e.* whether it was developed in a manner that fully provides for public participation, comment, and review.) DOE has consulted with both the Attorney General and the Chairman of the FTC about the impact on competition of using the methods contained in these standards and has received no comments objecting to their use.

M. Congressional Notification

As required by 5 U.S.C. 801, DOE will report to Congress on the promulgation of today's rule before its effective date. The report will state that it has been determined that the rule is not a "major rule" as defined by 5 U.S.C. 804(2).

N. Approval of the Office of the Secretary

The Secretary of Energy has approved publication of this final rule.

List of Subjects in 10 CFR Part 430

Administrative practice and procedure, Confidential business information, Energy conservation, Household appliances, Imports,

Incorporation by reference, Intergovernmental relations, Small businesses.

Issued in Washington, DC, on April 26, 2011.

Kathleen B. Hogan,

Deputy Assistant Secretary for Energy Efficiency, Office of Technology Development, Energy Efficiency and Renewable Energy.

For the reasons stated in the preamble, DOE amends part 430 of Chapter II of Title 10, Code of Federal Regulations as set forth below:

PART 430—ENERGY CONSERVATION PROGRAM FOR CONSUMER PRODUCTS

■ 1. The authority citation for part 430 continues to read as follows:

Authority: 42 U.S.C. 6291–6309; 28 U.S.C. 2461 note.

■ 2. Section 430.3 is amended by:

■ a. Redesignating paragraph (c)(13) as (c)(17); (c)(12) as (c)(13); (c)(11) as (c)(14); and paragraphs (c)(6) through (c)(10) as (c)(7) through (c)(11), respectively;

■ b. Removing in redesignated paragraphs (c)(7) and (c)(14) the words "Appendix R" and adding in their place "Appendix Q, Appendix Q1 and Appendix R";

■ c. Revising redesignated paragraph (c)(13);

■ d. Adding new paragraphs (c)(6), (c)(12), (c)(15) and (c)(16) to read as set forth below;

■ e. Removing and reserving paragraph (d).

These revisions and additions read as follows:

§ 430. 3 Materials incorporated by reference.

* * * * *

(c) * * *

(6) ANSI_IEC C78.81–2010 ("ANSI C78.81–2010"), American National Standard for Electric Lamps—Double-Capped Fluorescent Lamps—Dimensional and Electrical Characteristics, approved January 14, 2010; IBR approved for Appendix Q and Appendix Q1 to Subpart B.

* * * * *

(12) ANSI C82.1–2004, ("ANSI C82.1"), American National Standard for Lamp Ballast—Line Frequency Fluorescent Lamp Ballast, approved November 19, 2004; IBR approved for Appendix Q and Appendix Q1 to Subpart B.

(13) ANSI C82.2–2002, ("ANSI C82.2"), American National Standard for Lamp Ballasts—Method of Measurement of Fluorescent Ballasts, Approved June 6, 2002, IBR approved for Appendix Q and Appendix Q1 to Subpart B.

* * * * *

(15) ANSI C82.11 Consolidated-2002, ("ANSI C82.11"), American National Standard for Lamp Ballasts—High-frequency Fluorescent Lamp Ballasts—Supplements, approved March 11, 1999, August 5, 1999 and January 17, 2002; IBR approved for Appendix Q and Appendix Q1 to Subpart B.

(16) ANSI C82.13–2002 ("ANSI C82.13"), American National Standard for Lamp Ballasts—Definitions for Fluorescent Lamps and Ballasts, approved July 23, 2002; IBR approved for Appendix Q and Appendix Q1 to Subpart B.

* * * * *

(d) [Reserved]

* * * * *

■ 3. Section 430.23 is amended by revising paragraph (q) to read as follows:

§ 430.23 Test procedures for the measurement of energy and water consumption.

* * * * *

(q) *Fluorescent Lamp Ballasts.* (1) The Estimated Annual Energy Consumption (EAEC) for fluorescent lamp ballasts, expressed in kilowatt-hours per year, shall be the product of:

(i) The input power in kilowatts as determined in accordance with section 3.1.3.1 of appendix Q to this subpart; and

(ii) The representative average use cycle of 1,000 hours per year, the resulting product then being rounded off to the nearest kilowatt-hour per year.

(2) Ballast Efficacy Factor (BEF) shall be as determined in section 4.2 of appendix Q of this subpart.

(3) The Estimated Annual Operating Cost (EAOC) for fluorescent lamp ballasts, expressed in dollars per year, shall be the product of:

(i) The representative average unit energy cost of electricity in dollars per kilowatt-hour as provided by the Secretary,

(ii) The representative average use cycle of 1,000 hours per year, and

(iii) The input power in kilowatts as determined in accordance with section 3.1.3.1 of appendix Q to this subpart, the resulting product then being rounded off to the nearest dollar per year.

(4) Standby power consumption of certain fluorescent lamp ballasts shall be measured in accordance with section 3.2 of appendix Q to this subpart.

* * * * *

■ 4. Section 430.25 is revised to read as follows:

§ 430.25 Laboratory Accreditation Program.

Testing for fluorescent lamp ballasts performed in accordance with appendix Q1 to this subpart shall comply with this section § 430.25. The testing for general service fluorescent lamps, general service incandescent lamps, and incandescent reflector lamps shall be performed in accordance with appendix R to this subpart. The testing for medium base compact fluorescent lamps shall be performed in accordance with appendix W of this subpart. This testing shall be conducted by test laboratories accredited by the National Voluntary Laboratory Accreditation Program (NVLAP) or by an accrediting organization recognized by NVLAP. NVLAP is a program of the National Institute of Standards and Technology, U.S. Department of Commerce. NVLAP standards for accreditation of laboratories that test for compliance with standards for fluorescent lamp ballast luminous efficiency (BLE), lamp efficacy, and CRI are set forth in 15 CFR part 285. A manufacturer's or importer's own laboratory, if accredited, may conduct the applicable testing. Testing for BLE may also be conducted by laboratories accredited by Underwriters Laboratories or Council of Canada. Testing for fluorescent lamp ballasts performed in accordance with appendix Q to this subpart is not required to be conducted by test laboratories accredited by NVLAP or an accrediting organization recognized by NVLAP.

■ 5. Appendix Q to subpart B of part 430 is amended by:

■ a. Revising sections 1.15, 1.16, 1.17, and 2.

■ b. Redesignating sections 3.1, 3.2, 3.3, 3.3.1, 3.3.2, 3.3.3, 3.4, 3.4.1, and 3.4.2 as sections 3.1.1, 3.1.2, 3.1.3, 3.1.3.1, 3.1.3.2, 3.1.3.3, 3.1.4, 3.1.4.1, and 3.1.4.2, respectively.

■ c. Revising redesignated sections 3.1.1, 3.1.2, 3.1.3.1, 3.1.3.2, 3.1.3.3, 3.1.4.1, and 3.1.4.2.

■ d. Redesignating sections 3.5, 3.5.1, 3.5.2, 3.5.3, 3.5.3.1, 3.5.3.2, 3.5.3.3, and 3.5.3.4 as sections 3.2, 3.2.2, 3.2.3, 3.2.4, 3.2.4.1, 3.2.4.2, 3.2.4.3, and 3.2.4.4, respectively.

■ e. Adding sections 3.1 and 3.2.1.

■ f. Revising section 4.

These revisions and additions read as follows:

Appendix Q to Subpart B of Part 430—Uniform Test Method for Measuring the Energy Consumption of Fluorescent Lamp Ballasts

1. * * *

1.15 *Power Factor* means the power input divided by the product of ballast input

voltage and input current of a fluorescent lamp ballast, as measured under test conditions specified in ANSI C82.2 (incorporated by reference; see § 430.3).

1.16 *Power input* means the power consumption in watts of a ballast a fluorescent lamp or lamps, as determined in accordance with the test procedures specified in ANSI C82.2 (incorporated by reference; see § 430.3).

1.17 *Relative light output* means the light output delivered through the use of a ballast divided by the light output of a reference ballast, expressed as a percent, as determined in accordance with the test procedures specified in ANSI C82.2 (incorporated by reference; see § 430.3).

* * * * *

2. *Test Conditions.*

2.1 *Measurement of Active Mode Energy Consumption, BEF.* The test conditions for testing fluorescent lamp ballasts shall be done in accordance with ANSI C82.2 (incorporated by reference; see § 430.3). Any subsequent amendment to this standard by the standard setting organization will not affect the DOE test procedures unless and until amended by DOE. The test conditions for measuring active mode energy consumption are described in sections 4, 5, and 6 of ANSI C82.2. The test conditions described in this section (2.1) are applicable to section 3.1 of section 3, Test Method and Measurements. For section 2.1 and 3, when ANSI C82.2 is referenced, ANSI C78.81–2010 (incorporated by reference; see § 430.3), ANSI C82.1 (incorporated by reference; see § 430.3), ANSI C82.11 (incorporated by reference; see § 430.3), and ANSI C82.13 (incorporated by reference; see § 430.3) shall be used instead of the versions listed as normative references in ANSI C82.2.

2.2 *Measurement of Standby Mode Power.* The measurement of standby mode power need not be performed to determine compliance with energy conservation standards for fluorescent lamp ballasts at this time. This and the previous statement will be removed as part of a rulemaking to amend the energy conservation standards for fluorescent lamp ballasts to account for standby mode energy consumption, and the following shall apply on the compliance date for any such requirements.

The test conditions for testing fluorescent lamp ballasts shall be done in accordance with ANSI C82.2 (incorporated by reference; see § 430.3). Any subsequent amendment to this standard by the standard setting organization will not affect the DOE test procedures unless and until amended by DOE. The test conditions for measuring standby power are described in sections 5, 7, and 8 of ANSI C82.2. Fluorescent lamp ballasts that are capable of connections to control devices shall be tested with all commercially available compatible control devices connected in all possible configurations. For each configuration, a separate measurement of standby power shall be made in accordance with section 3.2 of the test procedure.

3. * * *

3.1 Active Mode Energy Efficiency Measurement

3.1.1 The test method for testing the active mode energy efficiency of fluorescent lamp ballasts shall be done in accordance with ANSI C82.2 (incorporated by reference; see § 430.3). Where ANSI C82.2 references ANSI C82.1–1997, the operator shall use ANSI C82.1 (incorporated by reference; see § 430.3) for testing low-frequency ballasts and ANSI C82.11 (incorporated by reference; see § 430.3) for high-frequency ballasts.

3.1.2 *Instrumentation.* The instrumentation shall be as specified by sections 5, 7, 8, and 15 of ANSI C82.2 (incorporated by reference; see § 430.3).

3.1.3 * * *

3.1.3.1 *Input Power.* Measure the input power (watts) to the ballast in accordance with ANSI C82.2 (incorporated by reference; see § 430.3), section 4.

3.1.3.2 *Input Voltage.* Measure the input voltage (volts) (RMS) to the ballast in accordance with ANSI C82.2 (incorporated by reference; see § 430.3), section 3.2.1 and section 4.

3.1.3.3 *Input Current.* Measure the input current (amps) (RMS) to the ballast in accordance with ANSI C82.2 (incorporated by reference; see § 430.3), section 3.2.1 and section 4.

3.1.4 * * *

3.1.4.1 Measure the light output of the reference lamp with the reference ballast in accordance with ANSI C82.2 (incorporated by reference; see § 430.3), section 12.

3.1.4.2 Measure the light output of the reference lamp with the test ballast in accordance with ANSI C82.2 (incorporated by reference; see § 430.3), section 12.

3.2. * * *

3.2.1 The test for measuring standby mode energy consumption of fluorescent lamp ballasts shall be done in accordance with ANSI C82.2 (incorporated by reference; see § 430.3).

* * * * *

4. *Calculations.*

4.1 Calculate relative light output:

$$\text{relative light output} = \frac{\text{Photocell output of lamp on test ballast}}{\text{Photocell output of lamp on reference ballast}} \times 100$$

Where: photocell output of lamp on test ballast is determined in accordance with section 3.1.4.2, expressed in watts, and photocell output of lamp on ref. ballast is determined in accordance with section 3.1.4.1, expressed in watts.

4.2. Determine the Ballast Efficacy Factor (BEF) using the following equations:

(a) Single lamp ballast

$$BEF = \frac{\text{relative light output}}{\text{input power}}$$

(b) Multiple lamp ballast

$$BEF = \frac{\text{average relative light output}}{\text{input power}}$$

Where:

Input power is determined in accordance with section 3.1.3.1, relative light output as defined in section 4.1, and average relative light output is the relative light output, as defined in section 4.1, for all lamps, divided by the total number of lamps.

4.3 Determine Ballast Power Factor (PF):

$$PF = \frac{\text{Input power}}{\text{Input voltage} \times \text{input current}}$$

Where:

Input power is as defined in section 3.1.3.1, Input voltage is determined in accordance with section 3.1.3.2, expressed in volts, and Input current is determined in accordance with section 3.1.3.3, expressed in amps.

■ 6. Appendix Q1 is added to subpart B of part 430 to read as follows:

Appendix Q1 to Subpart B of Part 430—Uniform Test Method for Measuring the Energy Consumption of Fluorescent Lamp Ballasts

1. Definitions

1.1. *AC control signal* means an alternating current (AC) signal that is supplied to the ballast using additional wiring for the purpose of controlling the ballast and putting the ballast in standby mode.

1.2. *Active Mode* means the condition in which an energy-using product—

(a) Is connected to a main power source;

(b) Has been activated; and

(c) Provides 1 or more main functions.

1.3. *Cathode heating* refers to power delivered to the lamp by the ballast for the purpose of raising the temperature of the lamp electrode or filament.

1.4. *Commercial ballast* is a fluorescent lamp ballast that is not a residential ballast as defined in section 1.13 and meets technical standards for non-consumer radio frequency lighting devices as specified in subpart C of 47 CFR part 18.

1.5. *DC control signal* means a direct current (DC) signal that is supplied to the ballast using additional wiring for the purpose of controlling the ballast and putting the ballast in standby mode.

1.6. *High-frequency ballast* is as defined in ANSI C82.13 (incorporated by reference; see § 430.3).

1.7. *Instant-start* is the starting method used instant-start systems as defined in ANSI C82.13 (incorporated by reference; see § 430.3).

1.8. *Low-frequency ballast* is a fluorescent lamp ballast that operates at a supply

frequency of 50 to 60 Hz and operates the lamp at the same frequency as the supply.

1.9. *PLC control signal* means a power line carrier (PLC) signal that is supplied to the ballast using the input ballast wiring for the purpose of controlling the ballast and putting the ballast in standby mode.

1.10. *Programmed-start* is the starting method used in programmed-start systems as defined in ANSI C82.13 (incorporated by reference; see § 430.3).

1.11. *Rapid-start* is the starting method used in rapid-start type systems as defined in ANSI C82.13 (incorporated by reference; see § 430.3).

1.12. *Reference lamp* is a fluorescent lamp that meets certain operating conditions as defined by ANSI C82.13 (incorporated by reference; see § 430.3).

1.13. *Residential ballast* is a fluorescent lamp ballast designed and labeled for use in residential applications. Residential ballasts must meet the technical standards for consumer RF lighting devices as specified in subpart C of 47 CFR part 18.

1.14. *RMS* is the root mean square of a varying quantity.

1.15. *Standby mode* means the condition in which an energy-using product—

(a) Is connected to a main power source; and

(b) Offers one or more of the following user-oriented or protective functions:

(i) To facilitate the activation or deactivation of other functions (including active mode) by remote switch (including remote control), internal sensor, or timer.

(ii) Continuous functions, including information or status displays (including clocks) or sensor-based functions.

1.16. *Wireless control signal* means a wireless signal that is radiated to and received by the ballast for the purpose of controlling the ballast and putting the ballast in standby mode.

2. Active Mode Procedure

2.1. Where ANSI C82.2 (incorporated by reference; see § 430.3) references ANSI C82.1–1997, the operator shall use ANSI C82.1 (incorporated by reference; see § 430.3) for testing low-frequency ballasts and shall use ANSI C82.11 (incorporated by reference; see § 430.3) for high-frequency ballasts. In addition, when ANSI C82.2 is referenced, ANSI C78.81–2010 (incorporated by reference; see § 430.3), ANSI C82.1, ANSI C82.11–2002, and ANSI C82.13 (incorporated by reference; see § 430.3) shall be used instead of the versions listed as normative references in ANSI C82.2.

2.2. Instruments

2.2.1. All instruments shall be as specified by ANSI C82.2 (incorporated by reference; see § 430.3).

2.2.2. *Power Analyzer.* In addition to the specifications in ANSI C82.2 (incorporated by reference; see § 430.3), the power analyzer shall have a maximum 100 pF capacitance to ground and frequency response between 40 Hz and 1 MHz.

2.2.3. *Current Probe.* In addition to the specifications in ANSI C82.2 (incorporated by reference; see § 430.3), the current probe shall be galvanically isolated and have frequency response between 40 Hz and 20 MHz.

2.3. Test Setup

2.3.1. The ballast shall be connected to a main power source and to the fluorescent lamp load according to the manufacturer's wiring instructions and ANSI C82.1 (incorporated by reference; see § 430.3) and ANSI C78.81–2010 (incorporated by reference; see § 430.3).

2.3.1.1.1. Wire lengths between the ballast and fluorescent lamp shall be the length provided by the ballast manufacturer. Wires shall be kept loose and not shortened or bundled.

2.3.1.1.1.1. If the wire lengths supplied with the ballast are of insufficient length to reach both ends of lamp, additional wire may be added. The minimal additional wire length necessary shall be added, and the additional wire shall be the same wire gauge as the wire supplied with the ballast. If no wiring is provided with the ballast, 18 gauge or thicker wire shall be used. The wires shall be separated from each other and ground to prevent parasitic capacitance for all wires used in the apparatus, including those wires from the ballast to the lamps and from the lamps to the measuring devices.

2.3.1.1.2. The fluorescent lamp shall meet the specifications of a reference lamp as defined by ANSI C82.13 (incorporated by reference; see § 430.3) and be seasoned at least 12 hours.

2.3.1.2. The ballast shall be connected to the number of lamps equal to the maximum number of lamps the ballast is designed to operate.

2.3.1.3. The ballast shall be tested with a reference lamp of the nominal wattage listed in Table A of this section.

2.3.1.4. For ballasts that operate rapid-start lamps (commonly referred to as 8-foot high output lamps) with recessed double contact bases, a nominal overall length of 96 inches, and that operate at ambient temperatures of 20 °F or less and are used in outdoor signs (sign ballasts):

2.3.1.4.1. A T8 lamp in accordance with Table A of this section shall be used for sign ballasts that only operate T8 lamps.

2.3.1.4.2. A T12 lamp in accordance with Table A of this section shall be used for sign ballasts that only operate T12 lamps.

2.3.1.4.3. A T12 lamp in accordance with Table A of this section shall be used for sign ballasts that are capable of operating both T8 and T12 lamps.

TABLE A—LAMP-AND-BALLAST PAIRINGS AND FREQUENCY ADJUSTMENT FACTORS

Ballast type	Nominal lamp wattage	Lamp diameter and base	Frequency adjustment factor (β)	
			Low-frequency	High-frequency
Ballasts that operate straight-shaped lamps (commonly referred to as 4-foot medium bipin lamps) with medium bipin bases and a nominal overall length of 48 inches.	32	T8 MBP	0.94	1.0
	34	T12 MBP	0.93	1.0
Ballasts that operate U-shaped lamps (commonly referred to as 2-foot U-shaped lamps) with medium bipin bases and a nominal overall length between 22 and 25 inches.	32	T8 MBP	0.94	1.0
	34	T12 MBP	0.93	1.0
Ballasts that operate rapid-start lamps (commonly referred to as 8-foot-high output lamps) with recessed double contact bases and a nominal overall length of 96 inches.	86	T8 HO RDC	0.92	1.0
	95	T12 HO RDC	0.94	1.0
Ballasts that operate instant-start lamps (commonly referred to as 8-foot slimline lamps) with single pin bases and a nominal overall length of 96 inches.	59	T8 slimline SP	0.95	1.0
	60	T12 slimline SP	0.94	1.0
Ballasts that operate straight-shaped lamps (commonly referred to as 4-foot miniature bipin standard output lamps) with miniature bipin bases and a nominal length between 45 and 48 inches.	28	T5 SO Mini-BP	0.95	1.0
Ballasts that operate straight-shaped lamps (commonly referred to as 4-foot miniature bipin high output lamps) with miniature bipin bases and a nominal length between 45 and 48 inches.	54	T5 HO Mini-BP	0.95	1.0

TABLE A—LAMP-AND-BALLAST PAIRINGS AND FREQUENCY ADJUSTMENT FACTORS—Continued

Ballast type	Nominal lamp wattage	Lamp diameter and base	Frequency adjustment factor (β)	
			Low-frequency	High-frequency
Ballasts that operate rapid-start lamps (commonly referred to as 8-foot high output lamps) with recessed double contact bases, a nominal overall length of 96 inches, and that operate at ambient temperatures of 20 °F or less and are used in outdoor signs.	86	T8 HO RDC	0.92	1.0
	110	T12 HO RDC	0.94	1.0

MBP, Mini-BP, RDC, and SP represent medium bipin, miniature bipin, recessed double contact, and single pin, respectively.

2.3.2. Power Analyzer

2.3.2.1. The power analyzer shall have n+1 channels where n is the number of lamps a ballast operates.

2.3.2.2. *Lamp Arc Voltage.* Leads from the power analyzer should attach to each fluorescent lamp according to Figure 1 of this section for rapid- and programmed-start ballasts, Figure 2 of this section for instant-start ballasts operating single pin (SP) lamps, and Figure 3 of this section for instant-start ballasts operating medium bipin (MBP), miniature bipin (mini-BP), or recessed double contact (RDC) lamps. The programmed- and rapid-start ballast test setup includes two 1000 ohm resistors placed in parallel with the lamp pins to create a midpoint from which to measure lamp arc voltage.

2.3.2.3. *Lamp Arc Current.* A current probe shall be positioned on each fluorescent lamp according to Figure 1 for rapid- and programmed-start ballasts, Figure 2 of this section for instant-start ballasts operating SP lamps, and Figure 3 of this section for instant-start ballasts operating MBP, mini-BP, and RDC lamps.

2.3.2.3.1. For the lamp arc current measurement, the full transducer ratio shall be set in the power analyzer to match the current probe to the power analyzer.

BILLING CODE 6450–01–P

$$\text{Full Transducer Ratio} = \frac{I_{in}}{V_{out}} \times \frac{R_{in}}{R_{in} + R_s}$$

Where:

I_{in} Current through the current transducer

V_{out} Voltage out of the transducer

R_{in} Power analyzer impedance

R_s Current probe output impedance

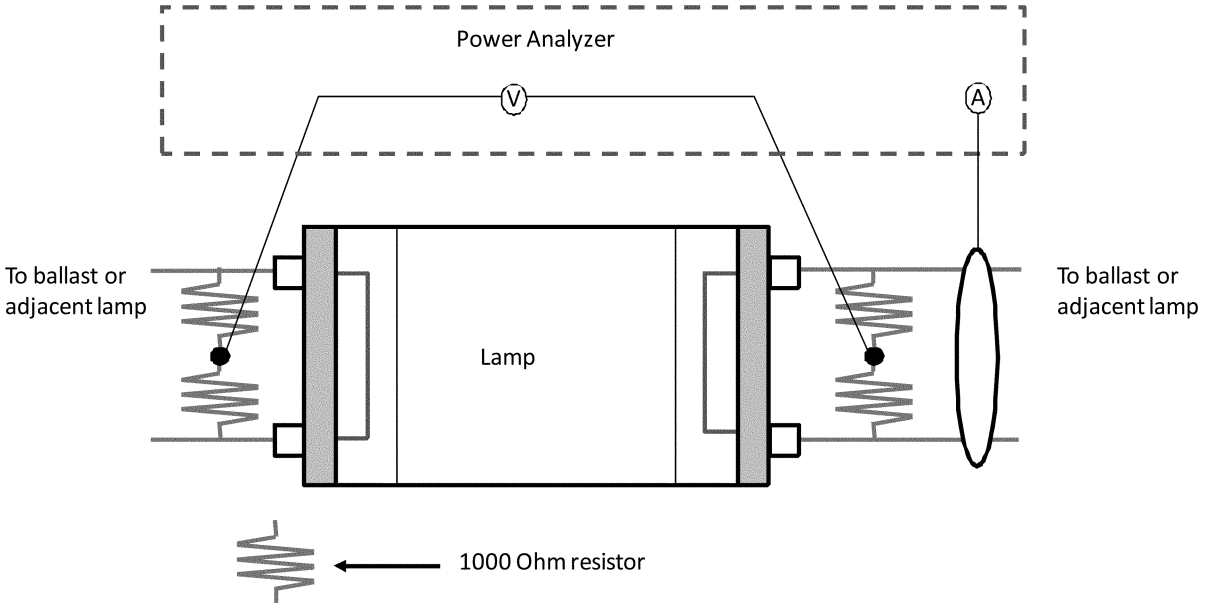

Figure 1: Programmed- and Rapid-Start Ballast Instrumentation Setup

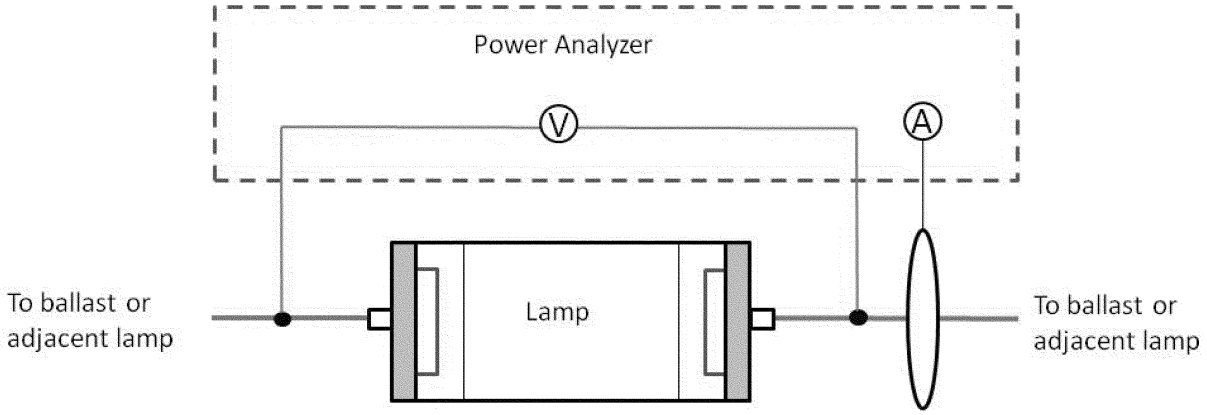

Figure 2: Instant-Start Ballasts that Operate SP Lamps Instrumentation Setup

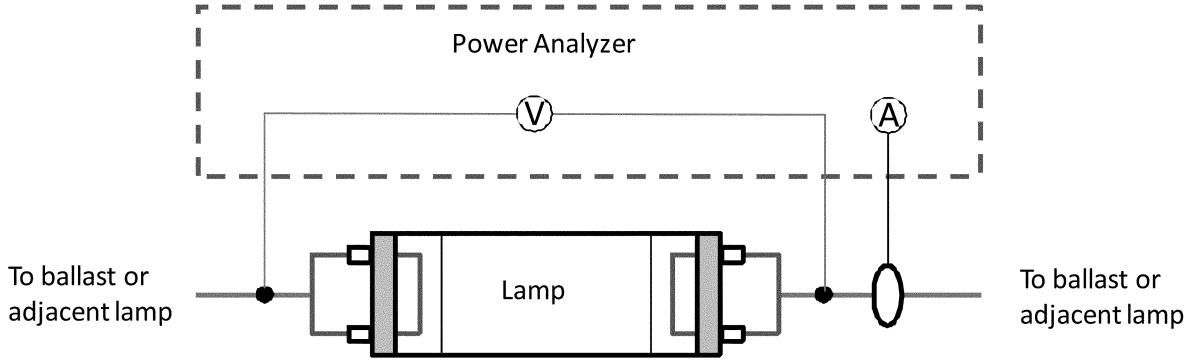

Figure 3: Instant-Start Ballasts that Operate MBP, mini-BP, and RDC Lamps Instrumentation Setup

BILLING CODE 6450–01–C

2.4. Test Conditions

2.4.1. The test conditions for testing fluorescent lamp ballasts shall be done in accordance with ANSI C82.2 (incorporated by reference; see § 430.3). DOE further specifies that the following revisions of the normative references indicated in ANSI C82.2) should be used in place of the references directly specified in ANSI C82.2: ANSI C78.81–2010 (incorporated by reference; see § 430.3), ANSI C82.1 (incorporated by reference; see § 430.3), ANSI C82.3 (incorporated by reference; see § 430.3), ANSI C82.11 (incorporated by reference; see § 430.3), and ANSI C82.13 (incorporated by reference; see § 430.3). All other normative references shall be as specified in ANSI C82.2.

2.4.2. *Room Temperature and Air Circulation.* The test facility shall be held at 25 ± 2°C, with minimal air movement as defined in ANSI C78.375 (incorporated by reference; see § 430.3).

2.4.3. *Input Voltage.* The directions in ANSI C82.2 (incorporated by reference; see § 430.3) section 4.1 should be ignored with the following directions for input voltage used instead. For commercial ballasts capable of operating at multiple voltages, the ballast shall be tested 277V ± 0.1%. For ballasts designed and labeled for residential applications and capable of operating at multiple voltages, the ballast shall be tested at 120V ± 0.1%. For ballasts designed and labeled as cold-temperature outdoor sign ballasts and capable of operating at multiple voltages, the ballast shall be tested at 120V ± 0.1%. Ballasts capable of operating at only one input voltage shall be tested at that specified voltage.

2.5. Test Method

2.5.1. *Ballast Luminous Efficiency.*

2.5.1.1. The ballast shall be connected to the appropriate fluorescent lamps and to measurement instrumentation as indicated by the Test Setup in section 2.3.

2.5.1.2. The ballast shall be operated at full output for at least 15 minutes but no longer than 1 hour until stable operating conditions are reached. After this condition is reached, concurrently measure the parameters described in sections 2.5.1.3 through 2.5.1.9.

2.5.1.2.1. Stable operating conditions are determined by measuring lamp arc voltage, current, and power once per second in accordance with the setup described in section 2.3. Once the difference between the maximum and minimum values for lamp arc voltage, current, and power do not exceed one percent over a four minute moving window, the system shall be considered stable.

2.5.1.3. *Lamp Arc Voltage.* Measure lamp arc voltage (volts) using the setup described in section 2.3.2.2.

2.5.1.4. *Lamp Arc Current.* Measure lamp arc current (amps) using the setup described in section 2.3.2.3.

2.5.1.5. *Lamp Arc Power.* The power analyzer shall calculate output power by using the measurements described in sections 2.5.1.3 and 2.5.1.4.

2.5.1.6. *Input Power.* Measure the input power (watts) to the ballast in accordance with ANSI C82.2 (incorporated by reference; see § 430.3), section 7.

2.5.1.7. *Input Voltage.* Measure the input voltage (volts) (RMS) to the ballast in accordance with ANSI C82.2 (incorporated by reference; see § 430.3), section 3.2.1 and section 4.

2.5.1.8. *Input Current.* Measure the input current (amps) (RMS) to the ballast in accordance with ANSI C82.2 (incorporated by reference; see § 430.3), section 3.2.1 and section 4.

2.5.1.9. *Lamp Operating Frequency.* Measure the frequency of the waveform delivered from the ballast to any lamp in accordance with the setup in section 2.3.

2.6. Calculations

2.6.1. Calculate ballast luminous efficiency (BLE).

$$\text{Ballast Luminous Efficiency} = \frac{\text{Total Test Ballast Lamp Arc Power}}{\text{Ballast Input Power}} * \beta$$

Where: Total Lamp Arc Power is the sum of the lamp arc powers for all lamps operated by the ballast as determined by section 2.5.1.5, ballast input power is as determined by section 2.5.1.6, and β is equal to the frequency adjustment factor in Table A.

2.6.2. Calculate Power Factor (PF).

$$\text{Power Factor} = \frac{\text{Ballast Input Power} \times \text{Input Voltage}}{\text{Input Current}}$$

Where: Ballast input power is determined in accordance with section 2.5.1.6, input voltage is determined in accordance with section 2.5.1.7, and input current in determined in accordance with section 2.5.1.8.

3. Standby Mode Procedure

3.1. The measurement of standby mode power need not be performed to determine compliance with energy conservation standards for fluorescent lamp ballasts at this time. The above statement will be removed as part of a rulemaking to amend the energy conservation standards for fluorescent lamp ballasts to account for standby mode energy consumption, and the following shall apply on the compliance date for such requirements.

3.2. Test Conditions

3.2.1. The test conditions for testing fluorescent lamp ballasts shall be done in accordance with the American National Standard Institute ANSI C82.2 (incorporated by reference; see § 430.3). Any subsequent amendment to this standard by the standard-setting organization will not affect the DOE test procedures unless and until amended by DOE. The test conditions for measuring standby power are described in sections 5, 7, and 8 of ANSI C82.2. Fluorescent lamp ballasts that are capable of connections to control devices shall be tested with all commercially available compatible control devices connected in all possible configurations. For each configuration, a separate measurement of standby power shall be made in accordance with section 3.3 of the test procedure.

3.3. Test Method and Measurements

3.3.1. The test for measuring standby mode energy consumption of fluorescent lamp ballasts shall be done in accordance with ANSI C82.2 (incorporated by reference; see § 430.3).

3.3.2. Send a signal to the ballast instructing it to have zero light output using the appropriate ballast communication protocol or system for the ballast being tested.

3.3.3. *Input Power.* Measure the input power (watts) to the ballast in accordance with ANSI C82.2, section 13, (incorporated by reference; see § 430.3).

3.3.4. *Control Signal Power.* The power from the control signal path will be measured using all applicable methods described below.

3.3.4.1. *AC Control Signal.* Measure the AC control signal power (watts), using a wattmeter (W), connected to the ballast in accordance with the circuit shown in Figure 4 of this section.

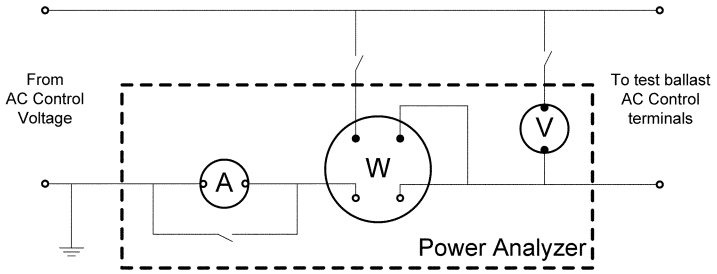

Figure 4: Circuit for Measuring AC Control Signal Power in Standby Mode

3.3.4.2. *DC Control Signal.* Measure the DC control signal voltage, using a voltmeter (V), and current, using an ammeter (A), connected to the ballast in accordance with the circuit shown in Figure 5 of this section. The DC control signal power is calculated by multiplying the DC control signal voltage and the DC control signal current.

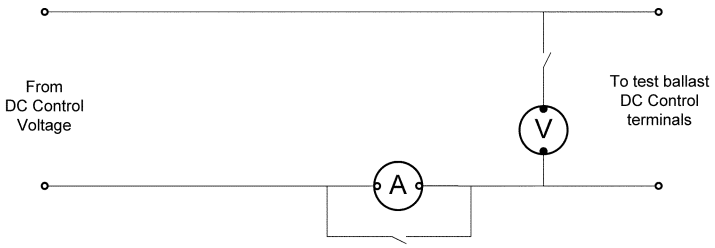

Figure 5: Circuit for Measuring DC Control Signal Power in Standby Mode

3.3.4.3. *Power Line Carrier (PLC) Control Signal.* Measure the PLC control signal power (watts), using a wattmeter (W), connected to the ballast in accordance with the circuit shown in Figure 6 of this section. The wattmeter must have a frequency response that is at least 10 times higher than the PLC being measured in order to measure the PLC signal correctly. The wattmeter must also be high-pass filtered to filter out power at 60 Hertz.

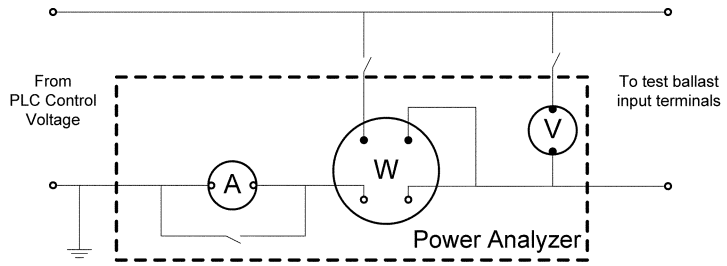

Figure 6: Circuit for Measuring PLC Control Signal Power in Standby Mode

3.3.4.4. *Wireless Control Signal.* The power supplied to a ballast using a wireless signal is not easily measured, but is estimated to be well below 1.0 watt. Therefore, the wireless control signal power is not measured as part of this test procedure.

[FR Doc. 2011–10704 Filed 5–3–11; 8:45 am]

BILLING CODE 6450–01–P

DEPARTMENT OF TRANSPORTATION

Federal Aviation Administration

14 CFR Part 25

[Docket No. NM453; Special Conditions No. 25–425–SC]

Special Conditions: Gulfstream Aerospace LP (GALP) Model G250 Airplane, Dynamic Test Requirements for Side-Facing, Single-Occupant Seats

AGENCY: Federal Aviation Administration (FAA), DOT.

ACTION: Final special conditions; request for comments.

SUMMARY: These special conditions are issued for the Gulfstream Aerospace LP (GALP) model G250 airplane. This airplane will have a novel or unusual design feature associated with dynamic test requirements for side-facing, single-occupant seats. The applicable airworthiness regulations do not contain adequate or appropriate safety standards for this design feature. These special conditions contain the additional safety standards that the Administrator considers necessary to establish a level of safety equivalent to that established by the existing airworthiness standards.

DATES: The effective date of these special conditions is March 18, 2011. We must receive your comments by June 20, 2011.

ADDRESSES: You must mail two copies of your comments to: Federal Aviation Administration, Transport Airplane Directorate, Attn: Rules Docket (ANM–113), Docket No. NM453, 1601 Lind Avenue SW., Renton, Washington 98057–3356. You may deliver two copies to the Transport Airplane Directorate at the above address. You must mark your comments: Docket No. NM453. You can inspect comments in the Rules Docket weekdays, except Federal holidays, between 7:30 a.m. and 4 p.m.

FOR FURTHER INFORMATION CONTACT: Dan Jacquet, FAA, Airframe/Cabin Safety Branch, ANM–115, Transport Airplane Directorate, Aircraft Certification Service, 1601 Lind Avenue, SW., Renton, Washington 98057–3356; telephone (425) 227–2676; facsimile (425) 227–1149; e-mail *daniel.jacquet@faa.gov.*

SUPPLEMENTARY INFORMATION:

The FAA has determined that notice of, and opportunity for prior public comment on, these special conditions are impracticable because these procedures would significantly delay issuance of the design approval and thus delivery of the affected aircraft. In addition, the substance of these special conditions has been subject to the public-comment process in several prior instances with no substantive comments received. The FAA therefore finds that good cause exists for making these special conditions effective upon issuance.

Comments Invited

We invite interested people to take part in this rulemaking by sending written comments, data, or views. The most helpful comments reference a specific portion of the special conditions, explain the reason for any recommended change, and include supporting data. We ask that you send us two copies of written comments.

We will file in the docket all comments we receive, as well as a report summarizing each substantive public contact with FAA personnel about these special conditions. You can inspect the docket before and after the comment closing date. If you wish to review the docket in person, go to the address in the **ADDRESSES** section of this preamble between 7:30 a.m. and 4 p.m., Monday through Friday, except Federal holidays.

We will consider all comments we receive by the closing date for comments. We may change these special conditions based on the comments we receive.

If you want us to acknowledge receipt of your comments on these special conditions, include with your comments a self-addressed, stamped postcard on which you have written the docket number. We will stamp the date on the postcard and mail it back to you.

Background

On March 30, 2006, GALP applied for a type certificate for their new Model G250. The Model G250 is an 8–10 passenger (19 maximum), twin-engine airplane with a 41,000-foot cruise altitude, maximum operating altitude of 45,000 feet, and a range of approximately 3,400 nautical miles. Airplane dimensions are 61.69-foot wing span, 66.6-foot overall length, and 20.8-foot tail height. Maximum takeoff weight is 39,600 pounds and maximum landing weight 32,700 pounds. Maximum cruise speed is mach 0.85, dive speed is mach 0.92. The avionics suite will be the Rockwell Collins Pro Line Fusion.

Type Certification Basis

Under the provisions of 14 CFR 21.17, GALP must show that the Model G250

meets the applicable provisions of part 25 as amended by Amendments 25–1 through 25–117.

If the Administrator finds that the applicable airworthiness regulations (*i.e.,* 14 CFR part 25) do not contain adequate or appropriate safety standards for the Model G250 because of a novel or unusual design feature, special conditions are prescribed under the provisions of § 21.16.

Special conditions are initially applicable to the model for which they are issued. Should the type certificate for that model be amended later to include any other model that incorporates the same novel or unusual design feature, the special conditions would also apply to the other model.

In addition to the applicable airworthiness regulations and special conditions, the Model G250 airplane must comply with the fuel-vent and exhaust-emission requirements of 14 CFR part 34, and the noise-certification requirements of 14 CFR part 36; and the FAA must issue a finding of regulatory adequacy under § 611 of Public Law 92–574, the "Noise Control Act of 1972."

The FAA issues special conditions, as defined in 14 CFR 11.19, in accordance with § 11.38, and they become part of the type-certification basis under 14 CFR 21.17(a)(2).

Novel or Unusual Design Features

The Model G250 will incorporate the following novel or unusual design features:

GALP proposes installing side-facing, single-occupant seats in the Model G250 airplane. FAA has determined that the existing regulations do not provide adequate or appropriate safety standards for occupants of side-facing, single-occupant seats. Therefore, in accordance with § 21.16, special conditions need to be developed to establish a level of safety equivalent to that established in the regulations.

Discussion

Amendment 25–64 to 14 CFR part 25 was issued June 16, 1988, to revise the emergency-landing conditions that must be considered in the design of an airplane. Amendment 25–64 revised the static-load conditions in § 25.561, and added a new § 25.562 that required dynamic testing of all seats approved for occupancy during takeoff and landing. The intent of Amendment 25–64 was to provide an improved level of safety for occupants on transport-category airplanes. Because most seating is forward/aft facing on transport-category airplanes, the pass/fail criteria developed in Amendment 25–64 focused primarily on these seats. Side-facing seat installations were not adequately taken into account for transport-category airplanes when this amendment was issued. Therefore, in November of 1997, the FAA issued Memorandum "Side-Facing Seats on Transport Category Airplanes" and draft Issue Paper "Dynamic Test Requirements for Single Place Side-Facing Seats" to address the dynamic certification of side-facing seats. The memorandum and the issue paper introduced requirements for Thoracic Trauma Index (TTI) and lateral pelvic acceleration, which were in addition to the existing injury criteria requirements of § 25.562(c). The specified conditions are required to be measured during dynamic testing of the side-facing seats and in compliance with the limitations to be demonstrated.

Applicability

As discussed above, these special conditions are applicable to the Model G250. Should GALP apply at a later date for a change to the type certificate to include another model incorporating the same novel or unusual design feature, these special conditions would apply to that model as well.

Conclusion

This action affects only certain novel or unusual design features on one model of airplane. It is not a rule of general applicability.

Under standard practice, the effective date of final special conditions would be 30 days after the date of publication in the **Federal Register**. However, as the certification date for the Model G250 is imminent, the FAA finds that good cause exists to make these special conditions effective upon issuance.

List of Subjects in 14 CFR Part 25

Aircraft, Aviation safety, Reporting and recordkeeping requirements.

The authority citation for these special conditions is as follows:

Authority: 49 U.S.C. 106(g), 40113, 44701, 44702, 44704.

The Special Conditions

Accordingly, pursuant to the authority delegated to me by the Administrator, the following special conditions are issued as part of the type-certification basis for GALP Model G250 airplanes.

1. Dynamic Test Requirements for Side-Facing, Single-Occupant Seats

In addition to the airworthiness standards in §§ 25.562 and 25.785, the following special conditions provide injury criteria and installation/testing guidelines that represent the minimum acceptable airworthiness standard for side-facing, single-occupant seats:

2. The Injury Criteria

(a) *Existing Criteria:* All injury protection criteria of § 25.562(c)(1) through (c)(6) apply to the occupant of a side-facing seat. Head-injury criterion (HIC) assessments are only required for head contact with the seat and/or adjacent structures.

(b) *Body-to-Wall/Furnishing Contact:* The seat must be installed aft of a structure, such as an interior wall or furnishing, that will support the pelvis, upper arm, chest, and head of an occupant seated next to the structure. A conservative representation of the structure and its stiffness must be included in the tests. It is recommended, but not required, that the contact surface of this structure be covered with at least two inches of energy-absorbing protective padding (foam or equivalent) such as Ensolite.

(c) *Thoracic Trauma:* TTI injury criterion must be substantiated by dynamic test or by rational analysis based on previous test(s) of a similar seat installation. Testing must be conducted with a Side Impact Dummy (SID) Anthropomorphic Test Device (ATD), as defined by 49 CFR part 572, Subpart F, or its equivalent. TTI must be less than 85, as defined in 49 CFR part 572, subpart F. SID TTI data must be processed as defined in Federal Motor Vehicle Safety Standard (FMVSS) part 571.214, section S6.13.5.

(d) *Pelvis:* Lateral pelvic acceleration must be shown by dynamic test or by rational analysis, based on previous test(s) of a similar seat installation, to not exceed 130g. Pelvic acceleration data must be processed as defined in FMVSS part 571.214, section S6.13.5.

(e) *Shoulder Strap Loads:* Where upper-torso straps (shoulder straps) are used for occupants, tension loads in individual straps must not exceed 1,750 pounds. If dual straps are used for restraining the upper torso, the total strap-tension loads must not exceed 2,000 pounds.

3. General Test Guidelines

(a) *One longitudinal test with the SID ATD* or its equivalent, undeformed floor, no yaw, and with all lateral structural supports (armrests/walls).

Pass/fail injury assessments: TTI and pelvic acceleration.

(b) *One longitudinal test with the Hybrid II ATD,* deformed floor, with 10 degrees yaw, and with all lateral structural supports (armrests/walls).

Pass/fail injury assessments: HIC; and upper-torso-restraint load, restraint-

system retention, and pelvic acceleration.

(c) *A vertical (14G) test* is to be conducted with modified Hybrid II ATDs with existing pass/fail criteria.

Issued in Renton, Washington, on March 18, 2011.

K.C. Yanamura,

Acting Manager, Transport Airplane Directorate, Aircraft Certification Service.

[FR Doc. 2011–10755 Filed 5–3–11; 8:45 am]

BILLING CODE 4910–13–P

DEPARTMENT OF TRANSPORTATION

Federal Aviation Administration

14 CFR Part 97

[Docket No. 30780; Amdt. No. 3423]

Standard Instrument Approach Procedures, and Takeoff Minimums and Obstacle Departure Procedures; Miscellaneous Amendments

AGENCY: Federal Aviation Administration (FAA), DOT.

ACTION: Final Rule.

SUMMARY: This rule establishes, amends, suspends, or revokes Standard Instrument Approach Procedures (SIAPs) and associated Takeoff Minimums and Obstacle Departure Procedures for operations at certain airports. These regulatory actions are needed because of the adoption of new or revised criteria, or because of changes occurring in the National Airspace System, such as the commissioning of new navigational facilities, adding new obstacles, or changing air traffic requirements. These changes are designed to provide safe and efficient use of the navigable airspace and to promote safe flight operations under instrument flight rules at the affected airports.

DATES: This rule is effective May 4, 2011. The compliance date for each SIAP, associated Takeoff Minimums, and ODP is specified in the amendatory provisions.

The incorporation by reference of certain publications listed in the regulations is approved by the Director of the Federal Register as of May 4, 2011.

ADDRESSES: Availability of matter incorporated by reference in the amendment is as follows:

For Examination

1. FAA Rules Docket, FAA Headquarters Building, 800 Independence Avenue, SW., Washington, DC 20591;

2. The FAA Regional Office of the region in which the affected airport is located;

3. The National Flight Procedures Office, 6500 South MacArthur Blvd., Oklahoma City, OK 73169 or

4. The National Archives and Records Administration (NARA). For information on the availability of this material at NARA, call 202–741–6030, or go to: *http://www.archives.gov/federal_register/code_of_federal_regulations/ibr_locations.html.*

Availability—All SIAPs are available online free of charge. Visit *http://nfdc.faa.gov* to register. Additionally, individual SIAP and Takeoff Minimums and ODP copies may be obtained from:

1. FAA Public Inquiry Center (APA–200), FAA Headquarters Building, 800 Independence Avenue, SW., Washington, DC 20591; or

2. The FAA Regional Office of the region in which the affected airport is located.

FOR FURTHER INFORMATION CONTACT: Harry J. Hodges, Flight Procedure Standards Branch (AFS–420) Flight Technologies and Programs Division, Flight Standards Service, Federal Aviation Administration, Mike Monroney Aeronautical Center, 6500 South MacArthur Blvd., Oklahoma City, OK 73169 (Mail Address: P.O. Box 25082 Oklahoma City, OK 73125) telephone: (405) 954–4164.

SUPPLEMENTARY INFORMATION: This rule amends Title 14, Code of Federal Regulations, part 97 (14 CFR part 97) by amending the referenced SIAPs. The complete regulatory description of each SIAP is listed on the appropriate FAA Form 8260, as modified by the National Flight Data Center (FDC)/Permanent Notice to Airmen (P–NOTAM), and is incorporated by reference in the amendment under 5 U.S.C. 552(a), 1 CFR part 51, and § 97.20 of Title 14 of the Code of Federal Regulations.

The large number of SIAPs, their complex nature, and the need for a special format make their verbatim publication in the **Federal Register** expensive and impractical. Further, airmen do not use the regulatory text of the SIAPs, but refer to their graphic depiction on charts printed by publishers of aeronautical materials. Thus, the advantages of incorporation by reference are realized and publication of the complete description of each SIAP contained in FAA form documents is unnecessary. This amendment provides the affected CFR sections and specifies the types of SIAP and the corresponding effective dates. This amendment also identifies the airport and its location, the procedure and the amendment number.

The Rule

This amendment to 14 CFR part 97 is effective upon publication of each separate SIAP as amended in the transmittal. For safety and timeliness of change considerations, this amendment incorporates only specific changes contained for each SIAP as modified by FDC/P–NOTAMs.

The SIAPs, as modified by FDC P–NOTAM, and contained in this amendment are based on the criteria contained in the U.S. Standard for Terminal Instrument Procedures (TERPS). In developing these changes to SIAPs, the TERPS criteria were applied only to specific conditions existing at the affected airports. All SIAP amendments in this rule have been previously issued by the FAA in a FDC NOTAM as an emergency action of immediate flight safety relating directly to published aeronautical charts. The circumstances which created the need for all these SIAP amendments requires making them effective in less than 30 days.

Because of the close and immediate relationship between these SIAPs and safety in air commerce, I find that notice and public procedure before adopting these SIAPs are impracticable and contrary to the public interest and, where applicable, that good cause exists for making these SIAPs effective in less than 30 days.

Conclusion

The FAA has determined that this regulation only involves an established body of technical regulations for which frequent and routine amendments are necessary to keep them operationally current. It, therefore—(1) Is not a "significant regulatory action" under Executive Order 12866; (2) is not a "significant rule" under DOT regulatory Policies and Procedures (44 FR 11034; February 26, 1979); and (3) does not warrant preparation of a regulatory evaluation as the anticipated impact is so minimal. For the same reason, the FAA certifies that this amendment will not have a significant economic impact on a substantial number of small entities under the criteria of the Regulatory Flexibility Act.

List of Subjects in 14 CFR Part 97

Air Traffic Control, Airports, Incorporation by reference, and Navigation (Air).

Issued in Washington, DC, on April 15, 2011.

Ray Towles,

Deputy Director, Flight Standards Service.

Adoption of the Amendment

Accordingly, pursuant to the authority delegated to me, Title 14, Code of Federal regulations, Part 97, 14 CFR part 97, is amended by amending Standard Instrument Approach Procedures, effective at 0901 UTC on the dates specified, as follows:

PART 97—STANDARD INSTRUMENT APPROACH PROCEDURES

■ 1. The authority citation for part 97 continues to read as follows:

Authority: 49 U.S.C. 106(g), 40103, 40106, 40113, 40114, 40120, 44502, 44514, 44701, 44719, 44721–44722.

■ 2. Part 97 is amended to read as follows:

§§ 97.23, 97.25, 97.27, 97.29, § 97.31, 97.33, 97.35 [Amended]

By amending: § 97.23 VOR, VOR/DME, VOR or TACAN, and VOR/DME or TACAN; § 97.25 LOC, LOC/DME, LDA, LDA/DME, SDF, SDF/DME; § 97.27 NDB, NDB/DME; § 97.29 ILS, ILS/DME, MLS, MLS/DME, MLS/RNAV; § 97.31 RADAR SIAPs; § 97.33 RNAV SIAPs; and § 97.35 COPTER SIAPs, Identified as follows:

** * * Effective Upon Publication*

AIRAC date	State	City	Airport	FDC No.	FDC date	Subject
2–Jun–11	IN	Terre Haute	Terre Haute Intl—Hulman Field.	1/2732	4/1/11	VOR/DME RWY 5, Amdt 17C
2–Jun–11	LA	Lake Charles	Lake Charles Rgnl	1/2810	4/1/11	RNAV (GPS) RWY 15, Orig
2–Jun–11	IL	Chicago (West Chicago)	Chicago/DuPage	1/3065	4/12/11	VOR OR GPS RWY 2L, Orig&-A
2–Jun–11	IL	Chicago (West Chicago)	Chicago/DuPage	1/3066	4/12/11	RNAV (GPS) RWY 10, Orig
2–Jun–11	IL	Chicago (West Chicago)	Chicago/DuPage	1/3067	4/12/11	VOR RWY 10, Amdt 12
2–Jun–11	IL	Chicago (West Chicago)	Chicago/DuPage	1/3068	4/12/11	ILS OR LOC RWY 2L, Amdt 2
2–Jun–11	IL	Chicago (West Chicago)	Chicago/DuPage	1/3069	4/12/11	ILS OR LOC RWY 10, Amdt 7B
2–Jun–11	MN	Eveleth	Eveleth—Virginia Muni	1/4562	4/1/11	VOR RWY 27, Orig-A
2–Jun–11	PA	Zelienople	Zelienople Muni	1/4697	4/6/11	RNAV (GPS) RWY 35, Orig-B
2–Jun–11	WV	Petersburg	Grant County	1/5884	4/12/11	LDA/DME B, Amdt 3
2–Jun–11	NC	Rocky Mount	Rocky Mount—Wilson Regional.	1/8971	4/7/11	RNAV (GPS) RWY 4, Amdt 1
2–Jun–11	NC	Fayetteville	Fayetteville Regional/Grannis Field.	1/8973	4/6/11	VOR RWY 4, Amdt 16

[FR Doc. 2011–10021 Filed 5–3–11; 8:45 am]

BILLING CODE 4910–13–P

DEPARTMENT OF TRANSPORTATION

Federal Aviation Administration

14 CFR Part 97

[Docket No. 30779; Amdt. No. 3422]

Standard Instrument Approach Procedures, and Takeoff Minimums and Obstacle Departure Procedures; Miscellaneous Amendments

AGENCY: Federal Aviation Administration (FAA), DOT.

ACTION: Final rule.

SUMMARY: This establishes, amends, suspends, or revokes Standard Instrument Approach Procedures (SIAPs) and associated Takeoff Minimums and Obstacle Departure Procedures for operations at certain airports. These regulatory actions are needed because of the adoption of new or revised criteria, or because of changes occurring in the National Airspace System, such as the commissioning of new navigational facilities, adding new obstacles, or changing air traffic requirements. These changes are designed to provide safe and efficient use of the navigable airspace and to promote safe flight operations under instrument flight rules at the affected airports.

DATES: This rule is effective May 4, 2011. The compliance date for each SIAP, associated Takeoff Minimums, and ODP is specified in the amendatory provisions.

The incorporation by reference of certain publications listed in the regulations is approved by the Director of the Federal Register as of May 4, 2011.

ADDRESSES: Availability of matters incorporated by reference in the amendment is as follows:

For Examination

1. FAA Rules Docket, FAA Headquarters Building, 800 Independence Avenue, SW., Washington, DC 20591;

2. The FAA Regional Office of the region in which the affected airport is located;

3. The National Flight Procedures Office, 6500 South MacArthur Blvd., Oklahoma City, OK 73169 or

4. The National Archives and Records Administration (NARA). For information on the availability of this material at NARA, call 202–741–6030, or go to: *http://www.archives.gov/federal_register/code_of_federal_regulations/ibr_locations.html.*

Availability—All SIAPs and Takeoff Minimums and ODPs are available online free of charge. Visit *http://www.nfdc.faa.gov* to register. Additionally, individual SIAP and Takeoff Minimums and ODP copies may be obtained from:

1. FAA Public Inquiry Center (APA–200), FAA Headquarters Building, 800 Independence Avenue, SW., Washington, DC 20591; or

2. The FAA Regional Office of the region in which the affected airport is located.

FOR FURTHER INFORMATION CONTACT: Harry J. Hodges, Flight Procedure Standards Branch (AFS–420), Flight Technologies and Programs Divisions, Flight Standards Service, Federal Aviation Administration, Mike Monroney Aeronautical Center, 6500 South MacArthur Blvd., Oklahoma City, OK. 73169 (Mail Address: P.O. Box 25082, Oklahoma City, OK 73125) Telephone: (405) 954–4164.

SUPPLEMENTARY INFORMATION: This rule amends Title 14 of the Code of Federal Regulations, Part 97 (14 CFR part 97), by establishing, amending, suspending, or revoking SIAPS, Takeoff Minimums and/or ODPS. The complete regulators description of each SIAP and its associated Takeoff Minimums or ODP for an identified airport is listed on FAA form documents which are incorporated by reference in this amendment under 5

U.S.C. 552(a), 1 CFR part 51, and 14 CFR part 97.20. The applicable FAA Forms are FAA Forms 8260–3, 8260–4, 8260–5, 8260–15A, and 8260–15B when required by an entry on 8260–15A.

The large number of SIAPs, Takeoff Minimums and ODPs, in addition to their complex nature and the need for a special format make publication in the **Federal Register** expensive and impractical. Furthermore, airmen do not use the regulatory text of the SIAPs, Takeoff Minimums or ODPs, but instead refer to their depiction on charts printed by publishers of aeronautical materials. The advantages of incorporation by reference are realized and publication of the complete description of each SIAP, Takeoff Minimums and ODP listed on FAA forms is unnecessary. This amendment provides the affected CFR sections and specifies the types of SIAPs and the effective dates of the, associated Takeoff Minimums and ODPs. This amendment also identifies the airport and its location, the procedure, and the amendment number.

The Rule

This amendment to 14 CFR part 97 is effective upon publication of each separate SIAP, Takeoff Minimums and ODP as contained in the transmittal. Some SIAP and Takeoff Minimums and textual ODP amendments may have been issued previously by the FAA in a Flight Data Center (FDC) Notice to Airmen (NOTAM) as an emergency action of immediate flight safety relating directly to published aeronautical charts. The circumstances which created the need for some SIAP and Takeoff Minimums and ODP amendments may require making them effective in less than 30 days. For the remaining SIAPS and Takeoff Minimums and ODPS, an effective date at least 30 days after publication is provided.

Further, the SIAPs and Takeoff Minimums and ODPS contained in this amendment are based on the criteria contained in the U.S. Standard for Terminal Instrument Procedures (TERPS). In developing these SIAPS and Takeoff Minimums and ODPs, the TERPS criteria were applied to the conditions existing or anticipated at the affected airports. Because of the close and immediate relationship between these SIAPs, Takeoff Minimums and ODPs, and safety in air commerce, I find that notice and public procedures before adopting these SIAPS, Takeoff Minimums and ODPs are impracticable and contrary to the public interest and, where applicable, that good cause exists for making some SIAPs effective in less than 30 days.

Conclusion

The FAA has determined that this regulation only involves an established body of technical regulations for which frequent and routine amendments are necessary to keep them operationally current. It, therefore—(1) is not a "significant regulatory action" under Executive Order 12866;(2) is not a "significant rule " under DOT Regulatory Policies and Procedures (44 FR 11034; February 26,1979) ; and (3)does not warrant preparation of a regulatory evaluation as the anticipated impact is so minimal. For the same reason, the FAA certifies that this amendment will not have a significant economic impact on a substantial number of small entities under the criteria of the Regulatory Flexibility Act.

List of Subjects in 14 CFR Part 97

Air traffic control, airports, Incorporation by reference, and Navigation (Air).

Issued in Washington, DC, on April 15, 2011.

Ray Towles,

Deputy Director, Flight Standards Service.

Adoption of the Amendment

Accordingly, pursuant to the authority delegated to me, Title 14, Code of Federal Regulations, part 97 (14 CFR part 97) is amended by establishing, amending, suspending, or revoking Standard Instrument Approach Procedures and/or Takeoff Minimums and/or Obstacle Departure Procedures effective at 0902 UTC on the dates specified, as follows:

PART 97—STANDARD INSTRUMENT APPROACH PROCEDURES

■ 1. The authority citation for part 97 continues to read as follows:

Authority: 49 U.S.C. 106(g), 40103, 40106, 40113, 40114, 40120, 44502, 44514, 44701, 44719, 44721–44722.

■ 2. Part 97 is amended to read as follows:

Effective 5 MAY 2011

Greer, SC, Greenville-Spartanburg Intl, ILS OR LOC RWY 22, Amdt 5
Greer, SC, Greenville-Spartanburg Intl, ILS OR LOC/DME RWY 4, ILS RWY 4 (SA CAT I), ILS RWY 4 (CAT II), ILS RWY 4 (CAT III), Amdt 23
Greer, SC, Greenville-Spartanburg Intl, RADAR 1, Amdt 7
Greer, SC, Greenville-Spartanburg Intl, RNAV (GPS) RWY 4, Amdt 2

Effective 2 JUN 2011

Hartford, CT, Hartford-Brainard, LDA RWY 2, Amdt 1G
Hartford, CT, Hartford-Brainard, VOR OR GPS–A, Amdt 9C
Warsaw, IN, Warsaw Muni, RNAV (GPS) RWY 27, Orig-A
Greenville, MI, Greenville Muni, Takeoff Minimums and Obstacle DP, Amdt 2A
Fulton, NY, Oswego County, ILS OR LOC RWY 33, Amdt 1
Fulton, NY, Oswego County, RNAV (GPS) RWY 15, Orig
Fulton, NY, Oswego County, RNAV (GPS) RWY 33, Orig
Westerly, RI, Westerly State, Takeoff Minimums and Obstacle DP, Amdt 3

Effective 30 JUN 2011

Anchorage, AK, Merill Field, RNAV (GPS)–A, Amdt 1
Anchorage, AK, Merill Field, Takeoff Minimums and Obstacle DP, Amdt 1
Big Lake, AK, Big Lake, RNAV (GPS) RWY 7, Amdt 1
Big Lake, AK, Big Lake, RNAV (GPS) RWY 25, Amdt 1
Big Lake, AK, Big Lake, Takeoff Minimums and Obstacle DP, Amdt 2
Big Lake, AK, Big Lake, VOR RWY 7, Amdt 7
Galena, AK, Edward G. Pitka Sr, VOR/DME RWY 7, Amdt 7B
Galena, AK, Edward G. Pitka Sr, VOR/DME RWY 25, Amdt 10B
Kenai, AK, Kenai Muni, ILS OR LOC RWY 19R, Amdt 4
Kenai, AK, Kenai Muni, RNAV (GPS) RWY 1L, Amdt 2
Kenai, AK, Kenai Muni, RNAV (GPS) RWY 19R, Amdt 2
Kenai, AK, Kenai Muni, VOR RWY 19R, Amdt 19
Kenai, AK, Kenai Muni, VOR/DME RWY 1L, Amdt 8
Wasilla, AK, Wasilla, Takeoff Minimums and Obstacle DP, Amdt 1
Demopolis, AL, Demopolis Muni, NDB RWY 4, Amdt 1, CANCELLED
Fayette, AL, Richard Arthur Field, NDB RWY 18, Amdt 1, CANCELLED
Camden, AR, Harrell Field, Takeoff Minimums and Obstacle DP, Orig
Phoenix, AZ, Phoenix Sky Harbor Intl, ILS OR LOC/DME RWY 7L, Amdt 11
Firebaugh, CA, Firebaugh, RNAV (GPS)–B, Orig
Firebaugh, CA, Firebaugh, VOR/DME–A, Amdt 3
Riverside/Rubidoux, CA, Flabob, Takeoff Minimums and Obstacle DP, Orig
Cornelia, GA, Habersham County, Takeoff Minimums and Obstacle DP, Amdt 4
Lawrenceville, GA, Gwinnett County-Briscoe Field, ILS OR LOC RWY 25, Amdt 2
Lawrenceville, GA, Gwinnett County-Briscoe Field, RNAV (GPS) RWY 7, Orig
Lawrenceville, GA, Gwinnett County-Briscoe Field, RNAV (GPS) RWY 25, Orig
Swainsboro, GA, Emanuel County, ILS OR LOC/DME RWY 13, Orig
Swainsboro, GA, Emanuel County, LOC/NDB RWY 13, Amdt 1, CANCELLED
Swainsboro, GA, Emanuel County, RNAV (GPS) RWY 13, Amdt 1
Swainsboro, GA, Emanuel County, RNAV (GPS) RWY 31, Amdt 1
Patterson, LA, Harry P Williams Memorial, NDB RWY 6, Amdt 11
Slidell, LA, Slidell, Takeoff Minimums and Obstacle DP, Orig

Norridgewock, ME, Central Maine Arpt of Norridgewock, Takeoff Minimums and Obstacle DP, Amdt 3
Cadillac, MI, Wexford County, NDB RWY 7, Amdt 2B, CANCELLED
Cadillac, MI, Wexford County, NDB RWY 25, Amdt 2, CANCELLED
Drummond Island, MI, Drummond Island, NDB RWY 26, Amdt 1, CANCELLED
Harrisonville, MO, Lawrence Smith Memorial, VOR/DME RWY 35, Orig-A, CANCELLED
Lincoln Park, NJ, Lincoln Park, NDB RWY 1, Amdt 3, CANCELLED
Clovis, NM, Clovis Muni, Takeoff Minimums and Obstacle DP, Orig
Lima, OH, Lima Allen County, VOR RWY 28, Amdt 16A, CANCELLED
Chickasha, OK, Chickasha Muni, Takeoff Minimums and Obstacle DP, Orig
Seven Springs Borough, PA, Seven Springs, Takeoff Minimums and Obstacle DP, Orig, CANCELLED
Seven Springs Borough, PA, Seven Springs, VOR OR GPS-A, Amdt 2A, CANCELLED
Wilkes-Barre/Scranton, PA, Wilkes-Barre/Scranton Intl, NDB–A, Amdt 17A
Panhandle, TX, Panhandle-Carson County, GPS RWY 35, Orig-A, CANCELLED
Panhandle, TX, Panhandle-Carson County, RNAV (GPS) RWY 17, Orig
Panhandle, TX, Panhandle-Carson County, RNAV (GPS) RWY 35, Orig
Panhandle, TX, Panhandle-Carson County, Takeoff Minimums and Obstacle DP, Orig
Panhandle, TX, Panhandle-Carson County, VOR RWY 17, Orig, CANCELLED
Panhandle, TX, Panhandle-Carson County, VOR–A, Orig
Blacksburg, VA, Virginia Tech/Montgomery Executive, Takeoff Minimums and Obstacle DP, Amdt 5
Dublin, VA, New River Valley, ILS OR LOC Y RWY 6, Orig
Dublin, VA, New River Valley, ILS OR LOC Z RWY 6, Amdt 5
Dublin, VA, New River Valley, RNAV (GPS) RWY 6, Orig
Dublin, VA, New River Valley, RNAV (GPS) RWY 24, Amdt 1
Dublin, VA, New River Valley, VOR–A, Amdt 9
Dublin, VA, New River Valley, VOR/DME RWY 6, Amdt 8
Yakima, WA, Yakima Air Terminal/Mcallister Field, COPTER NDB RWY 27, Amdt 2
Saratoga, WY, Shively Field, RNAV (GPS) RWY 5, Orig

[FR Doc. 2011–10018 Filed 5–3–11; 8:45 am]

BILLING CODE 4910–13–P

DEPARTMENT OF HEALTH AND HUMAN SERVICES

Food and Drug Administration

21 CFR Part 73

[Docket No. FDA–2009–C–0543]

Listing of Color Additives Exempt From Certification; Reactive Blue 69

AGENCY: Food and Drug Administration, HHS.

ACTION: Final rule.

SUMMARY: The Food and Drug Administration (FDA) is amending the color additive regulations to provide for the safe use of disodium 1-amino-4-[[4-[(2-bromo-1-oxoallyl)amino]-2-sulphonatophenyl]amino]-9,10-dihydro-9,10-dioxoanthracene-2-sulphonate (CAS Reg. No. 70209–99–3), also known as Reactive Blue 69, as a color additive in contact lenses. This action is in response to a petition filed by Sauflon Pharmaceuticals Ltd.

DATES: This rule is effective June 6, 2011. Submit either electronic or written objections and requests for a hearing by June 3, 2011. See section VII of this document for information on the filing of objections.

ADDRESSES: You may submit either electronic or written objections and requests for a hearing, identified by Docket No. FDA–2009–C–0543, by any of the following methods:

Electronic Submissions

Submit electronic objections in the following ways:

• *Federal eRulemaking Portal: http://www.regulations.gov.* Follow the instructions for submitting comments.

Written Submissions

Submit written objections in the following ways:

• FAX: 301–827–6870.

• Mail/Hand delivery/Courier (for paper, disk, or CD–ROM submissions): Division of Dockets Management (HFA–305), Food and Drug Administration, 5630 Fishers Lane, rm. 1061, Rockville, MD 20852.

Instructions: All submissions received must include the Agency name and Docket No. FDA–2009–C–0543 for this rulemaking. All objections received will be posted without change to *http://www.regulations.gov,* including any personal information provided. For detailed instructions on submitting objections, see the "Objections" heading of the **SUPPLEMENTARY INFORMATION** section of this document.

Docket: For access to the docket to read background documents or objections received, go to *http://www.regulations.gov* and insert the docket numbers, found in brackets in the heading of this document, into the "Search" box and follow the prompts and/or go to the Division of Dockets Management, 5630 Fishers Lane, rm. 1061, Rockville, MD 20852.

FOR FURTHER INFORMATION CONTACT: Raphael A. Davy, Center for Food Safety and Applied Nutrition (HFS–265), Food and Drug Administration, 5100 Paint Branch Pkwy., College Park, MD 20740–3835, 240–402–1272.

SUPPLEMENTARY INFORMATION:

I. Introduction

In a notice published in the **Federal Register** of November 18, 2009 (74 FR 59560), FDA announced that a color additive petition (CAP 8C0287) had been filed by Sauflon Pharmaceuticals Ltd., 49–53 York St., Twickenham, Middlesex, TW1 3LP, United Kingdom. The petition proposed to amend the color additive regulations in part 73 (21 CFR part 73), subpart D, *Medical Devices,* to provide for the safe use of disodium 1-amino-4-[[4-[(2-bromo-1-oxoallyl)amino]-2-sulphonatophenyl]amino]-9,10-dihydro-9,10-dioxoanthracene-2-sulphonate (Reactive Blue 69) (CAS Reg. No. 70209–99–3, Colour Index No. 612037) as a color additive in contact lenses. The petition was filed under section 721 of the Federal Food, Drug, and Cosmetic Act (the FD&C Act) (21 U.S.C. 379e).

II. Safety Evaluation

Under section 721(b)(4) of the FD&C Act, a color additive may not be listed for a particular use unless a fair evaluation of the data and information available to FDA establishes that the color additive is safe for that use. FDA's color additive regulations at 21 CFR 70.3(i) define safe to mean that there is "convincing evidence that establishes with reasonable certainty that no harm will result from the intended use of the color additive."

During its review of the safety of the use of Reactive Blue 69 pigment in contact lenses, the Agency considered the exposure to the color additive from the petitioned use. Based on information submitted in the petition, the Agency notes that it is highly unlikely that Reactive Blue 69 will migrate out of the contact lens into the aqueous environment of the eye because the color additive is covalently incorporated (copolymerized) into the polymeric lens matrix. Therefore, the Agency concludes that the exposure to the color additive, including any impurities that may be present in it,

from the petitioned use would be negligible (Ref. 1).

To establish that Reactive Blue 69 is safe for use in contact lenses, the petitioner submitted toxicity data from various studies. In a primary ocular irritation study in rabbits, there was no evidence of ocular irritation from saline and cottonseed oil extracts of the tinted lens material. The petitioner also conducted tests on lens extracts systemically injected into mice and cytotoxicity studies of lens extracts using L–959 mouse fibroblast cells. Neither study produced any evidence of toxicity (Ref. 2).

III. Conclusion

Based on the data contained in the petition and other available relevant material, FDA concludes that the petitioned use of the color additive in contact lenses is safe and that the color additive will achieve its intended technical effect. FDA also concludes that there is no need for imposing a limitation on the amount of the color additive that may be present in the lens, beyond the limitation that only the amount necessary to accomplish the intended technical effect may be used. Therefore, the regulations in part 73 should be amended as set forth in this document. In addition, based upon the factors listed in 21 CFR 71.20(b), the Agency concludes that certification of Reactive Blue 69 is not necessary for the protection of the public health.

IV. Inspection of Documents

In accordance with § 71.15 (21 CFR 71.15), the petition and the documents that FDA considered and relied upon in reaching its decision to approve the petition will be made available for inspection at the Center for Food Safety and Applied Nutrition by appointment with the information contact person (see **FOR FURTHER INFORMATION CONTACT**). As provided in § 71.15, the Agency will delete from the documents any materials that are not available for public disclosure before making the documents available for inspection.

V. Environmental Impact

The Agency has previously considered the environmental effect of this rule as announced in the notice of filing for CAP 8C0287 (74 FR 59560, November 18, 2009). No new information or comments have been received that would affect the Agency's previous determination that there is no significant impact on the human environment and that an environmental impact statement is not required.

VI. Paperwork Reduction Act of 1995

This final rule contains no collection of information. Therefore, clearance by the Office of Management and Budget under the Paperwork Reduction Act of 1995 is not required.

VII. Objections

This rule is effective as shown in the **DATES** section of this document; except as to any provisions that may be stayed by the filing of proper objections. Any person who will be adversely affected by this regulation may file with the Division of Dockets Management (see **ADDRESSES**) either electronic or written objections. Each objection shall be separately numbered, and each numbered objection shall specify with particularity the provisions of the regulation to which objection is made and the grounds for the objection. Each numbered objection on which a hearing is requested shall specifically so state. Failure to request a hearing for any particular objection shall constitute a waiver of the right to a hearing on that objection. Each numbered objection for which a hearing is requested shall include a detailed description and analysis of the specific factual information intended to be presented in support of the objection in the event that a hearing is held. Failure to include such a description and analysis for any particular objection shall constitute a waiver of the right to a hearing on the objection. It is only necessary to send one set of documents. It is no longer necessary to send three copies of all documents. Identify documents with the docket number found in brackets in the heading of this document. Any objections received in response to the regulation may be seen in the Division of Dockets Management between 9 a.m. and 4 p.m., Monday through Friday. FDA will publish notice of the objections that the Agency has received or lack thereof in the **Federal Register**.

VIII. References

The following references have been placed on display in the Division of Dockets Management (see **ADDRESSES**) and may be seen by interested persons between 9 a.m. and 4 p.m., Monday through Friday.

1. Memorandum from H. Lee, Division of Petition Review, Chemistry Review Team, FDA, to R. Davy, Division of Petition Review, Regulatory Group II, FDA, October 8, 2010.

2. Memorandum from T. Thurmond, Division of Petition Review, Toxicology Review Group, FDA, to R. Davy, Division of Petition Review, Regulatory Group II, FDA, October 25, 2010.

List of Subjects in 21 CFR Part 73

Color additives, Cosmetics, Drugs, Medical devices.

Therefore, under the Federal Food, Drug, and Cosmetic Act and under authority delegated to the Commissioner of Food and Drugs, and redelegated to the Director, Center for Food Safety and Applied Nutrition, 21 CFR part 73 is amended as follows:

PART 73—LISTING OF COLOR ADDITIVES EXEMPT FROM CERTIFICATION

■ 1. The authority citation for 21 CFR part 73 continues to read as follows:

Authority: 21 U.S.C. 321, 341, 342, 343, 348, 351, 352, 355, 361, 362, 371, 379e.

■ 2. Add § 73.3129 to subpart D to read as follows:

§ 73.3129 Disodium 1-amino-4-[[4-[(2-bromo-1-oxoallyl)amino]-2-sulphonatophenyl]amino]-9,10-dihydro-9,10-dioxoanthracene-2-sulphonate.

(a) *Identity.* The color additive is disodium 1-amino-4-[[4-[(2-bromo-1-oxoallyl)amino]-2-sulphonatophenyl]amino]-9,10-dihydro-9,10-dioxoanthracene-2-sulphonate (Reactive Blue 69) (CAS Reg. No. 70209–99–3, Colour Index No. 612037).

(b) *Uses and restrictions.* (1) The substance listed in paragraph (a) of this section may be used as a color additive in contact lenses in amounts not to exceed the minimum reasonably required to accomplish the intended coloring effect.

(2) Authorization and compliance with this use shall not be construed as waiving any of the requirements of sections 510(k), 515, and 520(g) of the Federal Food, Drug, and Cosmetic Act with respect to the contact lenses in which the additive is used.

(c) *Labeling.* The label of the color additive shall conform to the requirements in § 70.25 of this chapter.

(d) *Exemption from certification.* Certification of this color additive is not necessary for the protection of the public health, and therefore batches thereof are exempt from the certification requirements of section 721(c) of the Federal Food, Drug, and Cosmetic Act.

Dated: April 21, 2011.

Susan M. Bernard,

Acting Director, Office of Regulations, Policy and Social Sciences, Center for Food Safety and Applied Nutrition.

[FR Doc. 2011–10869 Filed 5–3–11; 8:45 am]

BILLING CODE 4160–01–P

ENVIRONMENTAL PROTECTION AGENCY

40 CFR Part 180

[EPA–HQ–OPP–2007–1077; FRL–8873–1]

Carbon Dioxide; Exemption From the Requirement of a Tolerance

AGENCY: Environmental Protection Agency (EPA).

ACTION: Final rule.

SUMMARY: This regulation establishes an exemption from the requirement of a tolerance for residues of carbon dioxide (CAS Reg. No. 124–38–9) when used as an inert ingredient as a propellant in pre-harvest and post-harvest applications and when applied to animals. Whitmire Micro-Gen Research Laboratories, Inc., c/o Landis International, Inc. submitted a petition to EPA under the Federal Food, Drug, and Cosmetic Act (FFDCA), requesting establishment of an exemption from the requirement of a tolerance. This regulation eliminates the need to establish a maximum permissible level for residues of carbon dioxide.

DATES: This regulation is effective May 4, 2011. Objections and requests for hearings must be received on or before July 5, 2011, and must be filed in accordance with the instructions provided in 40 CFR part 178 (see also Unit I.C. of the **SUPPLEMENTARY INFORMATION**).

ADDRESSES: EPA has established a docket for this action under docket identification (ID) number EPA–HQ–OPP–2007–1077. All documents in the docket are listed in the docket index available at *http://www.regulations.gov.* Although listed in the index, some information is not publicly available, *e.g.,* Confidential Business Information (CBI) or other information whose disclosure is restricted by statute. Certain other material, such as copyrighted material, is not placed on the Internet and will be publicly available only in hard copy form. Publicly available docket materials are available in the electronic docket at *http://www.regulations.gov,* or, if only available in hard copy, at the OPP Regulatory Public Docket in Rm. S–4400, One Potomac Yard (South Bldg.), 2777 S. Crystal Dr., Arlington, VA. The Docket Facility is open from 8:30 a.m. to 4 p.m., Monday through Friday, excluding legal holidays. The Docket Facility telephone number is (703) 305–5805.

FOR FURTHER INFORMATION CONTACT: P. V. Shah, Registration Division (7505P), Office of Pesticide Programs, Environmental Protection Agency, 1200 Pennsylvania Ave., NW., Washington, DC 20460–0001; telephone number: (703) 308–1846; e-mail address: *shah.pv@epa.gov.*

SUPPLEMENTARY INFORMATION:

I. General Information

A. Does this action apply to me?

You may be potentially affected by this action if you are an agricultural producer, food manufacturer, or pesticide manufacturer. Potentially affected entities may include, but are not limited to:

- Crop production (NAICS code 111).
- Animal production (NAICS code 112).
- Food manufacturing (NAICS code 311).
- Pesticide manufacturing (NAICS code 32532).

This listing is not intended to be exhaustive, but rather provides a guide for readers regarding entities likely to be affected by this action. Other types of entities not listed in this unit could also be affected. The North American Industrial Classification System (NAICS) codes have been provided to assist you and others in determining whether this action might apply to certain entities. If you have any questions regarding the applicability of this action to a particular entity, consult the person listed under **FOR FURTHER INFORMATION CONTACT**.

B. How can I get electronic access to other related information?

You may access a frequently updated electronic version of 40 CFR part 180 through the Government Printing Office's e-CFR site at *http://www.gpoaccess.gov/ecfr.*

C. How can I file an objection or hearing request?

Under FFDCA section 408(g), 21 U.S.C. 346a, any person may file an objection to any aspect of this regulation and may also request a hearing on those objections. You must file your objection or request a hearing on this regulation in accordance with the instructions provided in 40 CFR part 178. To ensure proper receipt by EPA, you must identify docket ID number EPA–HQ–OPP–2007–1077 in the subject line on the first page of your submission. All objections and requests for a hearing must be in writing, and must be received by the Hearing Clerk on or before July 5, 2011. Addresses for mail and hand delivery of objections and hearing requests are provided in 40 CFR 178.25(b).

In addition to filing an objection or hearing request with the Hearing Clerk as described in 40 CFR part 78, please submit a copy of the filing that does not contain any CBI for inclusion in the public docket. Information not marked confidential pursuant to 40 CFR part 2 may be disclosed publicly by EPA without prior notice. Submit a copy of your non-CBI objection or hearing request, identified by docket ID number EPA–HQ–OPP–2007–1077, by one of the following methods:

- *Federal eRulemaking Portal: http://www.regulations.gov.* Follow the on-line instructions for submitting comments.
- *Mail:* Office of Pesticide Programs (OPP) Regulatory Public Docket (7502P), Environmental Protection Agency, 1200 Pennsylvania Ave., NW., Washington, DC 20460–0001.
- *Delivery:* OPP Regulatory Public Docket (7502P), Environmental Protection Agency, Rm. S–4400, One Potomac Yard (South Bldg.), 2777 S. Crystal Dr., Arlington, VA. Deliveries are only accepted during the Docket Facility's normal hours of operation (8:30 a.m. to 4 p.m., Monday through Friday, excluding legal holidays). Special arrangements should be made for deliveries of boxed information. The Docket Facility telephone number is (703) 305–5805.

II. Petition for Exemption

In the **Federal Register** of December 22, 2010 (75 FR 80489) (FRL–8857–8), EPA issued a notice pursuant to section 408 of FFDCA, 21 U.S.C. 346a, announcing the filing of a pesticide petition (PP 0E7811) by Whitmire Micro-Gen Research Laboratories, Inc., c/o Landis International, Inc., P.O. Box 5126, Valdosta, GA 31603–5126. The petition requested that 40 CFR 180.910 and 40 CFR 180.930 be amended by establishing an exemption from the requirement of a tolerance for residues of carbon dioxide (CAS Reg. No. 124–38–9) when used as an inert ingredient as a propellant in pesticide formulations applied pre–harvest and post–harvest under 40 CFR 180.910 and applied to animals under 40 CFR 180.930. That notice referenced a summary of the petition prepared by Whitmire Micro-Gen Research Laboratories, Inc., c/o Landis International, Inc., the petitioner, which is available in the docket, *http://www.regulations.gov.* (Docket ID number EPA–HQ–OPP–2007–1077). There were no comments received in response to the notice of filing.

III. Inert Ingredient Definition

Inert ingredients are all ingredients that are not active ingredients as defined in 40 CFR 153.125 and include, but are

not limited to, the following types of ingredients (except when they have a pesticidal efficacy of their own): Solvents such as alcohols and hydrocarbons; surfactants such as polyoxyethylene polymers and fatty acids; carriers such as clay and diatomaceous earth; thickeners such as carrageenan and modified cellulose; wetting, spreading, and dispersing agents; propellants in aerosol dispensers; microencapsulating agents; and emulsifiers. The term "inert" is not intended to imply nontoxicity; the ingredient may or may not be chemically active. Generally, EPA has exempted inert ingredients from the requirement of a tolerance based on the low toxicity of the individual inert ingredients.

IV. Aggregate Risk Assessment and Determination of Safety

Section 408(c)(2)(A)(i) of FFDCA allows EPA to establish an exemption from the requirement for a tolerance (the legal limit for a pesticide chemical residue in or on a food) only if EPA determines that the tolerance is "safe." Section 408(b)(2)(A)(ii) of FFDCA defines "safe" to mean that "there is a reasonable certainty that no harm will result from aggregate exposure to the pesticide chemical residue, including all anticipated dietary exposures and all other exposures for which there is reliable information." This includes exposure through drinking water and in residential settings, but does not include occupational exposure. Section 408(b)(2)(C) of FFDCA requires EPA to give special consideration to exposure of infants and children to the pesticide chemical residue in establishing a tolerance and to "ensure that there is a reasonable certainty that no harm will result to infants and children from aggregate exposure to the pesticide chemical residue. * * *"

EPA establishes exemptions from the requirement of a tolerance only in those cases where it can be clearly demonstrated that the risks from aggregate exposure to pesticide chemical residues under reasonably foreseeable circumstances will pose no appreciable risks to human health. In order to determine the risks from aggregate exposure to pesticide inert ingredients, the Agency considers the toxicity of the inert in conjunction with possible exposure to residues of the inert ingredient through food, drinking water, and through other exposures that occur as a result of pesticide use in residential settings. If EPA is able to determine that a finite tolerance is not necessary to ensure that there is a reasonable certainty that no harm will result from aggregate exposure to the inert ingredient, an exemption from the requirement of a tolerance may be established.

Consistent with section 408(c)(2)(A) of FFDCA, and the factors specified in FFDCA section 408(c)(2)(B), EPA has reviewed the available scientific data and other relevant information in support of this action. EPA has sufficient data to assess the hazards of and to make a determination on aggregate exposure for carbon dioxide including exposure resulting from the exemption established by this action. EPA's assessment of exposures and risks associated with carbon dioxide follows.

A. Toxicological Profile

EPA has evaluated the available toxicity data for carbon dioxide and considered their validity, completeness, and reliability, as well as the relationship of the results of the studies to human risk. EPA has also considered available information concerning the variability of the sensitivities of major identifiable subgroups of consumers, including infants and children. The primary sources of data for this assessment are the U.S. EPA's 1991, Reregistration Eligibility Decision document (RED) that included carbon dioxide (US EPA RED, 1991), and the Report of the FQPA Tolerance Reassessment Progress and Risk Management Decision (TRED) for Carbon Dioxide issued by EPA in 2004. The Agency has not found any more recent information that would change the conclusions found in these documents. Therefore, these documents are being used to evaluate the proposed exemption from the requirement of a tolerance for use as an inert ingredient as a propellant applied pre-harvest and post-harvest under 40 CFR 180.910 and applied to animals under 40 CFR 180.930. Specific information on the studies received and the nature of the adverse effects caused by carbon dioxide can be found in these documents at *http://www.regulations.gov,* "Reregistration Eligibility Document (RED) for Carbon and Carbon Dioxide", "Lower Risk Pesticide Chemical Focus Group's Assessment for Carbon Dioxide Tolerance Reassessment (TRED)", and "PC code 800029; Decision Document for Pesticide Petition 0E7811; Carbon Dioxide (CAS Reg. No. 124–38–9) for Use as an Inert Ingredient as a Propellant Applied Pre-Harvest and Post-Harvest Under 40 CFR 180.910 and For Use on Animals Under 40 CFR 180.930." found in docket ID number EPA–HQ–OPP–2007–1077.

The toxicology data for carbon dioxide are all derived from inhalation studies using high concentrations of carbon dioxide. Although these data show carbon dioxide does pose some hazard at concentrations well above normal atmospheric levels, these data have limited relevance to evaluating the safety of carbon dioxide residues in food. Because it is a gas, carbon dioxide would be expected to leave little or no residues on plant commodities, and, to the extent carbon dioxide is absorbed by the plant, it would likely be converted by the photosynthesis process into sugars and other organic compounds that are not of toxicological concern.

In evaluating the human toxicity of carbon dioxide, it is relevant to consider that "carbon dioxide is produced by the body's metabolism and is always present in the body at about 6 percent concentration. An average adult human will produce more than 500g of carbon dioxide daily under resting conditions, and will produce much more when active." (US EPA RED, 1991). It is on this basis that the Food and Drug Administration has classified carbon dioxide as Generally Recognized As Safe (21 CFR 184.1240) as a direct food additive. As the discussion in Unit IV.D. on exposure reveals, even worst case theoretical levels of carbon dioxide residues in food would be dwarfed by normal body levels of carbon dioxide.

B. Toxicological Points of Departure/Levels of Concern

Considering its presence in the environment and in the human body, the additional toxicological contribution of carbon dioxide through the proposed use is expected to be minimal. Therefore, the Agency has determined that a qualitative assessment for all pathways of human exposure to carbon dioxide (food, drinking water, and residential) is appropriate.

C. Aggregate Exposures

1. Dietary exposures (from food and drinking water). In evaluating dietary exposure to carbon dioxide, EPA considered exposure under the proposed exemption from the requirement of a tolerance. EPA assessed dietary exposures from carbon dioxide in food and drinking water as follows:

No residue data were submitted for carbon dioxide; however, carbon dioxide is not expected to accumulate in treated raw agricultural commodities, rather, it will diffuse into the atmosphere following application due to its physical and chemical properties. In the absence of reliable data regarding dietary exposures to carbon dioxide, the

Agency assessed dietary exposure using its highly conservative Dietary Exposure Evaluation Model software with the Food Commodity Intake Database (DEEM–FCID ™, Version 2.03). This approach uses surrogate information to derive upper bound exposure estimates for the subject inert ingredient. Upper bound exposure estimates are based on the highest tolerance for a given commodity from a list of high-use insecticides, herbicides, and fungicides. A complete description of the general approach taken to assess inert ingredient risks in the absence of residue data is contained in the memorandum entitled "Alkyl Amines Polyalkoxylates (Cluster 4): Acute and Chronic Aggregate (Food and Drinking Water) Dietary Exposure and Risk Assessments for the Inerts." (D361707, S. Piper, 2/25/09) and can be found at *http://www.regulations.gov* in docket ID number EPA–HQ–OPP–2008–0738.

The Agency believes the assumptions used to estimate dietary exposures led to an extremely conservative assessment of dietary risk due to a series of compounded conservatisms. For example, the model assumes that the inert ingredients are used on all commodities and that residues will be present for every consumed commodity at the highest tolerance level residue for all food forms (including meat, milk, poultry, and eggs), using default processing factors for dried commodities and assuming that 100% of all crops are "treated" with the inert ingredient. In addition, a default concentration of 100 parts per billion (ppb) was assumed for the inert ingredient residues in drinking water. Accordingly, although sufficient information to quantify actual residue levels in food is not available, the compounding of these conservative assumptions will lead to a significant exaggeration of actual exposures. EPA does not believe that this approach underestimates exposure in the absence of residue data. Even with the extremely conservative nature of this screening level model, the estimated dietary (food and drinking water) exposures from carbon dioxide when used in pesticide formulations are 10,000 fold less than the amount of carbon dioxide naturally produced by the human body each day.

2. Non-dietary exposure. The term "residential exposure" is used in this document to refer to non-occupational, non-dietary exposure (*e.g.,* textiles (clothing and diapers), carpets, swimming pools, and hard surface disinfection on walls, floors, tables). Obviously, humans are exposed through respiration to carbon dioxide in the atmosphere. Dietary exposure from naturally-carbonated and artificially-carbonated beverages is also ubiquitous. The discussion in this Unit focuses on additional exposures from use of carbon dioxide as a propellant in pesticide products.

i. Dermal exposure. In evaluating the potential for exposure from the use of carbon dioxide in residential pesticide products, dermal exposures of concern are not anticipated due to its physical and chemical properties and dissipating nature.

ii. Inhalation exposures. Inhalation is the primary route of exposure from carbon dioxide because of its high vapor pressure. Because of the potential increased risk to acute inhalation exposure from indoor uses, EPA used its conservative Exposure and Fate Assessment Screening Tool (E–FAST v.2.0) screening level model to estimate the potential for inhalation exposures from indoor uses of carbon dioxide as a propellant in residential pesticide products. E–Fast was developed by EPA's Office of Pollution, Prevention and Toxics as a tool to estimate concentrations of chemicals released from consumer products. Modeled estimates of concentrations and doses are designed to significantly overestimate exposures for use in a screening level assessment. For carbon dioxide, E–FAST's aerosol paint scenario was selected because it potentially resembles a use of a residential pesticide product using carbon dioxide as a propellant. This scenario estimates potential acute inhalation exposure over 20 minutes of aerosol paint use in an enclosed utility room. The Agency considers an acute inhalation exposure to be a single event occurring over a period of less than 24 hours. In this case, the E–FAST model generated estimates of exposure are expected to be greater than what is reasonably anticipated from the use of carbon dioxide as an inert ingredient in residential-use pesticide products. The concentration of carbon dioxide in aerosol paint products used in the E–FAST model was 100%. The results of the conservative E–FAST modeling show a peak concentration potential of 4,923 parts per million (ppm) (8,860 mg/m^3). EPA does not expect actual exposure from residential use of carbon dioxide as a propellant as an inert ingredient in pesticide products to exceed these modeling estimates (peak concentration potential of 4,923 ppm (8,860 mg/m^3)) and expects that outdoor exposure concentrations would also be lower.

3. Cumulative effects from substances with a common mechanism of toxicity. Section 408(b)(2)(D)(v) of FFDCA requires that, when considering whether to establish, modify, or revoke a tolerance, the Agency consider "available information" concerning the cumulative effects of a particular pesticide's residues and "other substances that have a common mechanism of toxicity."

EPA has not found carbon dioxide to share a common mechanism of toxicity with any other substances, and carbon dioxide does not appear to produce a toxic metabolite produced by other substances. For the purposes of this tolerance action, therefore, EPA has assumed that carbon dioxide does not have a common mechanism of toxicity with other substances. For information regarding EPA's efforts to determine which chemicals have a common mechanism of toxicity and to evaluate the cumulative effects of such chemicals, see EPA's Web site at *http://www.epa.gov/pesticides/cumulative.*

D. Safety Factor for Infants and Children

In general. Section 408(b)(2)(C) of FFDCA provides that EPA shall apply an additional tenfold (10X) margin of safety for infants and children in the case of threshold effects to account for prenatal and postnatal toxicity and the completeness of the database on toxicity and exposure unless EPA determines based on reliable data that a different margin of safety will be safe for infants and children. This additional margin of safety is commonly referred to as the FQPA Safety Factor (SF). In applying this provision, EPA either retains the default value of 10X, or uses a different additional safety factor when reliable data available to EPA support the choice of a different factor.

EPA has not used a quantitative risk assessment approach based on safety factors for carbon dioxide residues given that normal atmospheric levels of carbon dioxide do not pose a hazard, carbon dioxide is necessary to the proper functioning of the human body, and exposure to carbon dioxide residues from use in pesticide products is miniscule compared to existing environmental levels. For the same reasons, an additional safety factor to protect children is not needed.

E. Aggregate Risks and Determination of Safety

EPA expects aggregate exposure to carbon dioxide residues to pose no appreciable risk to human health given that normal atmospheric levels of carbon dioxide do not pose a hazard. Carbon dioxide is necessary to the proper functioning of the human body, and it is unlikely that the use of carbon

dioxide as an inert ingredient as a propellant in pesticide products will result in residues in food that measurably add to carbon dioxide exposure. Even potential non-dietary acute inhalation exposure from indoor uses was conducted using the extremely conservative E–FAST screening level model (described under Unit IV.C.2b), showed maximum levels of exposure of 4,923 ppm, well below the maximum permitted exposure limits established as safe by Office of Safety Health Administration (OSHA) or National Institute of Occupational and Health (NIOSH) (30,000 ppm).

Taking into consideration all available information on carbon dioxide, EPA has determined that there is a reasonable certainty that no harm to any population subgroup, including infants and children, will result from aggregate exposure to carbon dioxide under reasonably foreseeable circumstances. Therefore, the establishment of an exemption from tolerance for residues of carbon dioxide (CAS Reg. No. 124–38–9) when used as an inert ingredient as a propellant in pesticide formulations applied pre- and post-harvest under 40 CFR 180.910 and when applied to animals under 40 CFR 180.930 is safe under FFDCA section 408.

V. Other Considerations

A. Analytical Enforcement Methodology

An analytical method is not required for enforcement purposes since the Agency is establishing an exemption from the requirement of a tolerance without any numerical limitation.

B. International Residue Limits

In making its tolerance decisions, EPA seeks to harmonize U.S. tolerances with international standards whenever possible, consistent with U.S. food safety standards and agricultural practices. EPA considers the international maximum residue limits (MRLs) established by the Codex Alimentarius Commission (Codex), as required by FFDCA section 408(b)(4). The Codex Alimentarius is a joint U.N. Food and Agriculture Organization/World Health Organization food standards program, and it is recognized as an international food safety standards-setting organization in trade agreements to which the United States is a party. EPA may establish a tolerance that is different from a Codex MRL; however, FFDCA section 408(b)(4) requires that EPA explain the reasons for departing from the Codex level.

The Codex has not established a MRL for carbon dioxide.

VI. Conclusions

Therefore, an exemption from the requirement of a tolerance is established under 40 CFR 180.910 and 40 CFR 180.930 for residues of carbon dioxide (CAS Reg. No. 124–38–9) when used as an inert ingredient in pesticide formulations as a propellant in pre- and post-harvest applications under 40 CFR 180.910 and when applied to animals under 40 CFR 180.930.

VII. Statutory and Executive Order Reviews

This final rule establishes a tolerance under section 408(d) of FFDCA in response to a petition submitted to the Agency. The Office of Management and Budget (OMB) has exempted these types of actions from review under Executive Order 12866, entitled *Regulatory Planning and Review* (58 FR 51735, October 4, 1993). Because this final rule has been exempted from review under Executive Order 12866, this final rule is not subject to Executive Order 13211, entitled *Actions Concerning Regulations That Significantly Affect Energy Supply, Distribution, or Use* (66 FR 28355, May 22, 2001) or Executive Order 13045, entitled *Protection of Children from Environmental Health Risks and Safety Risks* (62 FR 19885, April 23, 1997). This final rule does not contain any information collections subject to OMB approval under the Paperwork Reduction Act (PRA), 44 U.S.C. 3501 *et seq.,* nor does it require any special considerations under Executive Order 12898, entitled *Federal Actions to Address Environmental Justice in Minority Populations and Low-Income Populations* (59 FR 7629, February 16, 1994).

Since tolerances and exemptions that are established on the basis of a petition under section 408(d) of FFDCA, such as the tolerance in this final rule, do not require the issuance of a proposed rule, the requirements of the Regulatory Flexibility Act (RFA) (5 U.S.C. 601 *et seq.*) do not apply.

This final rule directly regulates growers, food processors, food handlers, and food retailers, not States or Tribes, nor does this action alter the relationships or distribution of power and responsibilities established by Congress in the preemption provisions of section 408(n)(4) of FFDCA. As such, the Agency has determined that this action will not have a substantial direct effect on States or Tribal governments, on the relationship between the national government and the States or Tribal governments, or on the distribution of power and responsibilities among the various levels of government or between the Federal Government and Indian Tribes. Thus, the Agency has determined that Executive Order 13132, entitled *Federalism* (64 FR 43255, August 10, 1999) and Executive Order 13175, entitled *Consultation and Coordination with Indian Tribal Governments* (65 FR 67249, November 9, 2000) do not apply to this final rule. In addition, this final rule does not impose any enforceable duty or contain any unfunded mandate as described under Title II of the Unfunded Mandates Reform Act of 1995 (UMRA) (Pub. L. 104–4).

This action does not involve any technical standards that would require Agency consideration of voluntary consensus standards pursuant to section 12(d) of the National Technology Transfer and Advancement Act of 1995 (NTTAA), Public Law 104–113, section 12(d) (15 U.S.C. 272 note).

VIII. Congressional Review Act

The Congressional Review Act, 5 U.S.C. 801 *et seq.,* generally provides that before a rule may take effect, the agency promulgating the rule must submit a rule report to each House of the Congress and to the Comptroller General of the United States. EPA will submit a report containing this rule and other required information to the U.S. Senate, the U.S. House of Representatives, and the Comptroller General of the United States prior to publication of this final rule in the **Federal Register**. This final rule is not by 5 U.S.C. 804(2).

List of Subjects in 40 CFR Part 180

Environmental protection, Administrative practice and procedure, Agricultural commodities, Pesticides and pests, Reporting and recordkeeping requirements.

Dated: April 26, 2011.

G. Jeffrey Herndon,

Acting Director, Registration Division, Office of Pesticide Programs.

Therefore, 40 CFR chapter I is amended as follows:

PART 180—[AMENDED]

■ 1. The authority citation for part 180 continues to read as follows:

Authority: 21 U.S.C. 321(q), 346a and 371.

■ 2. In § 180.910, the table is amended by adding alphabetically the following inert ingredient to read as follows:

§ 180.910 Inert ingredients used pre-harvest and post-harvest; exemptions from the requirement of a tolerance.

* * * * *

Inert ingredients	Limits	Uses
* * * * * * *		
Carbon Dioxide (CAS Reg. No. 124–38–9)	None	Propellant.
* * * * * * *		

■ 3. In § 180.930, the table is amended by adding alphabetically the following inert ingredient to read as follows:

§ 180.930 Inert ingredients applied to animals; exemptions from the requirement of a tolerance.

* * * * *

Inert ingredients	Limits	Uses
* * * * * * *		
Carbon Dioxide (CAS Reg. No. 124–38–9)	None	Propellant.
* * * * * * *		

[FR Doc. 2011–10889 Filed 5–3–11; 8:45 am]

BILLING CODE 6560–50–P

ENVIRONMENTAL PROTECTION AGENCY

40 CFR Part 180

[EPA–HQ–OPP–2008–0771; FRL–8873–3]

Clothianidin; Pesticide Tolerances

AGENCY: Environmental Protection Agency (EPA).

ACTION: Final rule.

SUMMARY: This regulation establishes tolerances for residues of clothianidin in or on mustard, seed. Bayer CropScience requested these tolerances under the Federal Food, Drug, and Cosmetic Act (FFDCA).

DATES: This regulation is effective May 4, 2011. Objections and requests for hearings must be received on or before July 5, 2011, and must be filed in accordance with the instructions provided in 40 CFR part 178 (see also Unit I.C. of the **SUPPLEMENTARY INFORMATION**).

ADDRESSES: EPA has established a docket for this action under docket identification (ID) number EPA–HQ–OPP–2008–0771. All documents in the docket are listed in the docket index available at *http://www.regulations.gov.* Although listed in the index, some information is not publicly available, *e.g.,* Confidential Business Information (CBI) or other information whose disclosure is restricted by statute. Certain other material, such as copyrighted material, is not placed on the Internet and will be publicly available only in hard copy form. Publicly available docket materials are available in the electronic docket at *http://www.regulations.gov,* or, if only available in hard copy, at the OPP Regulatory Public Docket in Rm. S–4400, One Potomac Yard (South Bldg.), 2777 S. Crystal Dr., Arlington, VA. The Docket Facility is open from 8:30 a.m. to 4 p.m., Monday through Friday, excluding legal holidays. The Docket Facility telephone number is (703) 305–5805.

FOR FURTHER INFORMATION CONTACT: Marianne Lewis, Registration Division (7505P), Office of Pesticide Programs, Environmental Protection Agency, 1200 Pennsylvania Ave., NW., Washington, DC 20460–0001; telephone number: (703) 308–8043; e-mail address: *lewis.marianne@epa.gov.*

SUPPLEMENTARY INFORMATION:

I. General Information

A. Does this action apply to me?

You may be potentially affected by this action if you are an agricultural producer, food manufacturer, or pesticide manufacturer. Potentially affected entities may include, but are not limited to those engaged in the following activities:

- Crop production (NAICS code 111).
- Animal production (NAICS code 112).
- Food manufacturing (NAICS code 311).
- Pesticide manufacturing (NAICS code 32532).

This listing is not intended to be exhaustive, but rather to provide a guide for readers regarding entities likely to be affected by this action. Other types of entities not listed in this unit could also be affected. The North American Industrial Classification System (NAICS) codes have been provided to assist you and others in determining whether this action might apply to certain entities. If you have any questions regarding the applicability of this action to a particular entity, consult the person listed under **FOR FURTHER INFORMATION CONTACT**.

B. How can I access electronic copies of this document?

You may access a frequently updated electronic version of EPA's tolerance regulations at 40 CFR part 180 through the Government Printing Office's e-CFR cite at *http://www.gpoaccess.gov/ecfr.*

C. Can I file an objection or hearing request?

Under section 408(g) of FFDCA, 21 U.S.C. 346a, any person may file an objection to any aspect of this regulation and may also request a hearing on those objections. You must file your objection or request a hearing on this regulation in accordance with the instructions provided in 40 CFR part 178. To ensure proper receipt by EPA, you must identify docket ID number EPA–HQ–OPP–2008–0771 in the subject line on the first page of your submission. All requests must be in writing, and must be mailed or delivered to the Hearing Clerk as required by 40 CFR part 178 on or before July 5, 2011.

In addition to filing an objection or hearing request with the Hearing Clerk as described in 40 CFR part 178, please submit a copy of the filing that does not contain any CBI for inclusion in the public docket that is described in **ADDRESSES**. Information not marked confidential pursuant to 40 CFR part 2 may be disclosed publicly by EPA without prior notice. Submit this copy, identified by docket ID number EPA–

HQ–OPP–2008–0771, by one of the following methods:

• *Federal eRulemaking Portal: http://www.regulations.gov.* Follow the on-line instructions for submitting comments.

• *Mail:* Office of Pesticide Programs (OPP) Regulatory Public Docket (7502P), Environmental Protection Agency, 1200 Pennsylvania Ave., NW., Washington, DC 20460–0001.

• *Delivery:* OPP Regulatory Public Docket (7502P), Environmental Protection Agency, Rm. S–4400, One Potomac Yard (South Bldg.), 2777 S. Crystal Dr., Arlington, VA. Deliveries are only accepted during the Docket Facility's normal hours of operation (8:30 a.m. to 4 p.m., Monday through Friday, excluding legal holidays). Special arrangements should be made for deliveries of boxed information. The Docket Facility telephone number is (703) 305–5805.

II. Summary of Petitioned-For Tolerance

In the **Federal Register** of June 23, 2010 (75 FR 35803) (FRL–8831–3), EPA issued a notice pursuant to section 408(d)(3) of FFDCA, 21 U.S.C. 346a(d)(3), announcing the filing of a pesticide petition (PP 0F7712) by Bayer CropScience, P.O. Box 12014, 2 T.W. Alexander Drive, Research Triangle Park, NC 27709. The petition requested that 40 CFR 180.586 be amended by establishing tolerances for residues of the insecticide clothianidin, (E)-1-(2-chloro-1,3-thiazol-5-ylmethyl)-3-methyl-2-nitroguanidine, in or on mustard, seed at 0.01 parts per million (ppm). That notice referenced a summary of the petition prepared by Bayer CropScience, the registrant, which is available to the public in the docket, *http://www.regulations.gov.* There were no comments received in response to the notice of filing.

Bayer CropScience requested tolerances for residues of clothianidin to support mustard, seed treatment uses.

III. Aggregate Risk Assessment and Determination of Safety

Section 408(b)(2)(A)(i) of FFDCA allows EPA to establish a tolerance (the legal limit for a pesticide chemical residue in or on a food) only if EPA determines that the tolerance is "safe." Section 408(b)(2)(A)(ii) of FFDCA defines "safe" to mean that "there is a reasonable certainty that no harm will result from aggregate exposure to the pesticide chemical residue, including all anticipated dietary exposures and all other exposures for which there is reliable information." This includes exposure through drinking water and in residential settings, but does not include occupational exposure. Section 408(b)(2)(C) of FFDCA requires EPA to give special consideration to exposure of infants and children to the pesticide chemical residue in establishing a tolerance and to "ensure that there is a reasonable certainty that no harm will result to infants and children from aggregate exposure to the pesticide chemical residue. * * *"

Consistent with section 408(b)(2)(D) of FFDCA, and the factors specified in section 408(b)(2)(D) of FFDCA, EPA has reviewed the available scientific data and other relevant information in support of this action. EPA has sufficient data to assess the hazards of and to make a determination on aggregate exposure for the petitioned-for tolerances for clothianidin. EPA's assessment of exposures and risks associated with clothianidin follows.

A. Toxicological Profile

EPA has evaluated the available toxicity data and considered its validity, completeness, and reliability as well as the relationship of the results of the studies to human risk. EPA has also considered available information concerning the variability of the sensitivities of major identifiable subgroups of consumers, including infants and children.

EPA considered the toxicity of clothianidin as well as several metabolites and degradates in conducting this risk assessment. Metabolites/degradates of concern in plants include parent and TMG for leafy and root and tuber vegetables; parent-only for other crops; and parent, TZNG and MNG for rotational crops. For livestock commodities, the metabolites/degradates of concern include: Parent and TZU, TZG, TZNG and ATMG-pyruvate for ruminants; and parent and TZU, TZG, TZNG, and ATG-acetate for poultry. Acute toxicity and genotoxicity data are available for several metabolites/degradates of clothianidin. Given that the points of departure (POD) used for risk assessment are well below the LD_{50} levels observed in the acute toxicology studies and that clothianidin and its metabolites/degradates of toxicological concern are similar in structure, EPA is assuming that these compounds are toxicologically equivalent to clothianidin with respect to the endpoints being used for risk assessment.

Clothianidin and its metabolites and degradates have relatively low acute toxicity via oral, dermal and inhalation routes of exposure; however, acute oral administration of clothianidin in mouse and the TMG metabolite in rat showed evidence of increased relative toxicity. There is no evidence of dermal sensitization or eye irritation with the exception of the clothianidin-triazan intermediate, which is a dermal sensitizer. The available data indicate that there are no consistent target organs in mammals; however, some effects noted in the liver, hematopoietic system and kidney are similar to effects from other neonicotinoid insecticides.

In subchronic oral studies, the dog seemed to be more sensitive to clothianidin than the rat. In addition to decreases in body weight and body weight gains observed in both animals, dogs also displayed decreased white blood cells, albumin and total protein, as well as some anemia. Long-term dietary administration of clothianidin did not result in a wider spectrum of effects in the dog; in contrast, the chronic feeding studies in rats showed additional effects in the liver, ovaries and kidneys. In the mouse chronic oral study, increases in vocalization and decreases in body weight and body weight gain were noted.

Based on the lack of significant tumor increases in two adequate rodent carcinogenicity studies, EPA has classified clothianidin as "not likely to be carcinogenic to humans." A bone marrow micronucleus assay in mice showed that clothianidin is neither clastogenic nor aneugenic up to a toxic oral dose. Additionally, a study on the livers of Wistar male mice showed no induction of unscheduled DNA sysnthesis up to the limit dose; therefore, mutagenicity is not of concern.

Clinical signs of neurotoxicity were exhibited in both rats (decreased arousal, motor activity and locomotor activity) and mice (decreased spontaneous motor activity, tremors and deep respirations) in acute neurotoxicity studies following exposure by gavage; however, no indications of neurotoxicity were observed following dietary exposure in the subchronic neurotoxicity study in rats.

There was no evidence of increased quantitative or qualitative susceptibility of rat or rabbit fetuses following *in utero* exposure to clothianidin in developmental studies; however, increased quantitative susceptibility of rat pups was seen in both the reproduction and developmental neurotoxicity studies. In the rat reproduction study, offspring toxicity (decreased body weight gains and absolute thymus weights in pups, delayed sexual maturation and an increase in stillbirths) was observed in the absence of maternal effects. In the developmental neurotoxicity study in rats, offspring effects (decreased body

weights, body weight gains, motor activity and acoustic startle response amplitude) were noted at doses lower than those resulting in maternal toxicity.

Decreased absolute and relative thymus and spleen weights were observed in multiple studies; these studies showed possible evidence of effects on the immune system. In addition, juvenile rats in the rat reproduction study appeared to be more susceptible to these effects. However, a guideline immunotoxicity study showed no evidence of clothianidin-mediated immunotoxicity in adult rats and a developmental immunotoxicity study demonstrated no increased susceptibility for offspring with regard to immunotoxicity.

Specific information on the studies received and the nature of the adverse effects caused by clothianidin as well as the no-observed-adverse-effect-level (NOAEL) and the lowest-observed-adverse-effect-level (LOAEL) from the toxicity studies can be found at *http://www.regulations.gov* in document "Clothianidin: Human Health Risk Assessment for Proposed Uses on Berries (Group 13–07H), Brassica Vegetables (Group 5), Cotton, Cucurbit Vegetables (Group 9), Fig, Fruiting Vegetables (Group 8), Leafy Green Vegetables (Group 4A), Peach, Pomegranate, Soybean, Tree Nuts (Group 14), and Tuberous and Corm Vegetables (Group 1C)" in docket ID number EPA–HQ–OPP–2008–0945.

B. Toxicological Points of Departure/Levels of Concern

Once a pesticide's toxicological profile is determined, EPA identifies toxicological POD and levels of concern to use in evaluating the risk posed by human exposure to the pesticide. For hazards that have a threshold below which there is no appreciable risk, the toxicological POD is used as the basis for derivation of reference values for risk assessment. PODs are developed based on a careful analysis of the doses in each toxicological study to determine the dose at which no adverse effects are observed (the NOAEL) and the lowest dose at which adverse effects of concern are identified (the LOAEL). Uncertainty/safety factors are used in conjunction with the POD to calculate a safe exposure level—generally referred to as a population-adjusted dose (PAD) or a reference dose (RfD)—and a safe margin of exposure (MOE). For non-threshold risks, the Agency assumes that any amount of exposure will lead to some degree of risk. Thus, the Agency estimates risk in terms of the probability of an occurrence of the adverse effect expected in a lifetime. For more information on the general principles EPA uses in risk characterization and a complete description of the risk assessment process, see *http://www.epa.gov/pesticides/factsheets/riskassess.htm.*

A summary of the toxicological endpoints for clothianidin used for human risk assessment is shown in the Table of this unit.

TABLE—SUMMARY OF TOXICOLOGICAL DOSES AND ENDPOINTS FOR CLOTHIANIDIN FOR USE IN HUMAN HEALTH RISK ASSESSMENT

Exposure/scenario	Point of departure and uncertainty/safety factors	RfD, PAD, LOC for risk assessment	Study and toxicological effects
Acute dietary (Females 13–49 years of age).	NOAEL = 25 milligrams/kilograms/day (mg/kg/day). UF_A = 10x UF_H = 10x FQPA SF = 1x	Acute RfD = 0.25 mg/kg/day. aPAD = 0.25mg/kg/day.	Rabbit developmental study. LOAEL = 75 mg/kg/day based on increased litter incidence of a missing lobe of the lung.
Acute dietary (General population).	NOAEL = 25 mg/kg/day .... UF_A = 10x UF_H = 10x FQPA SF = 1x	Acute RfD = 0.25 mg/kg/day. aPAD = 0.25 mg/kg/day.	Special neurotoxicity/pharmacological study in mice. LOAEL = 50 mg/kg/day based on transient signs of decreased spontaneous motor activity, tremors and deep respirations.
Chronic dietary (All populations including infants and children).	NOAEL= 9.8 mg/kg/day .... UF_A = 10x UF_H = 10x FQPA SF = 1x	Chronic RfD = 0.098 mg/kg/day. cPAD = 0.098 mg/kg/day.	2-Generation reproduction study. LOAEL = 31.2 mg/kg/day based on decreased body weight gains and delayed sexual maturation, decreased absolute thymus weights in F1 pups and increased stillbirths in both generations.
Incidental oral (Short and intermediate term).	NOAEL= 9.8 mg/kg/day .... UF_A = 10x UF_H = 10x FQPA SF = 1x	LOC for MOE = 100	2-Generation reproduction study. LOAEL = 31.2 mg/kg/day based on decreased body weight gains and delayed sexual maturation, decreased absolute thymus weights in F1 pups and increased stillbirths in both generations.
Dermal (All durations)	Oral study NOAEL = 9.8 mg/kg/day (dermal absorption rate = 1%. UF_A = 10x UF_H = 10x FQPA SF = 1x	LOC for MOE = 100	2-Generation reproduction study. LOAEL = 31.2 mg/kg/day based on decreased body weight gains and delayed sexual maturation, decreased absolute thymus weights in F1 pups and increased stillbirths in both generations.
Inhalation (All durations)	Oral study NOAEL= 9.8 mg/kg/day (inhalation absorption rate = 100%). UF_A = 10x UF_H = 10x FQPA SF = 1x	LOC for MOE = 100	2-Generation reproduction study. LOAEL = 31.2 mg/kg/day based on decreased body weight gains and delayed sexual maturation, decreased absolute thymus weights in F1 pups and increased stillbirths in both generations.
Cancer (Oral, dermal, inhalation).	"Not likely to be Carcinogenic to Humans"		

UF_A = extrapolation from animal to human (interspecies). UF_H = potential variation in sensitivity among members of the human population (intraspecies). FQPA SF = Food Quality Protection Act Safety Factor. PAD = population adjusted dose (a = acute, c = chronic). RfD = reference dose. MOE = margin of exposure. LOC = level of concern.

C. Exposure Assessment

1. *Dietary exposure from food and feed uses.* In evaluating dietary exposure to clothianidin, EPA considered exposure from the petitioned-for tolerances as well as all existing clothianidin tolerances in 40 CFR 180.586. EPA assessed dietary exposures from clothianidin in food as follows:

i. *Acute exposure.* Quantitative acute dietary exposure and risk assessments are performed for a food-use pesticide, if a toxicological study has indicated the possibility of an effect of concern occurring as a result of a 1-day or single exposure.

Such effects were identified for clothianidin. In estimating acute dietary exposure, EPA used food consumption information from the United States Department of Agriculture (USDA) 1994–1996 and 1998 Nationwide Continuing Surveys of Food Intake by Individuals (CSFII). As to residue levels in food from use of clothianidin, EPA used maximum field trial values, empirical processing factors and assumed 100 percent crop treated (PCT) for all commodities. Clothianidin is a major metabolite of thiamethoxam, and there are a number of crops for which uses of both clothianidin and thiamethoxam have been registered. The labels for the various end-use products containing these active ingredients prohibit the application of both active ingredients to the same crop during a growing cycle. Due to that restriction and the assumption of 100 PCT, a single value reflecting the greatest clothianidin residue from either active ingredient has been used for crops listed for use with both active ingredients (versus combined estimates from clothianidin and from thiamethoxam). Generally, this assessment uses the established or recommended clothianidin tolerance for crops having tolerances for both compounds (the exception being low-growing berry, subgroup 13–07G, which is based on observed clothianidin residues in thiamethoxam strawberry field trials). For foods with thiamethoxam tolerances but without clothianidin tolerances, maximum residues of clothianidin observed in thiamethoxam field trials have been used in these assessments. These include meats, meat by-products, artichoke, tropical fruits, coffee, hop, mint, rice, and strawberry. The metabolism of clothianidin is complex, with a few major (> 10% of the total radioactive residues) and numerous minor metabolites. Metabolites/degradates of concern in plants include clothianidin and TMG for leafy and root and tuber vegetables; parent-only for other crops; and parent, TZNG and MNG for rotational crops. For livestock commodities, the metabolites of concern include: Parent and TZU, TZG, TZNG, and ATMG-pyruvate for ruminants; and parent and TZU, TZG, TZNG, and ATG-acetate for poultry. For leafy vegetables the EPA required analysis for residues of TMG along with parent in field trial samples. Residues of TMG were shown to occur in leafy vegetables at levels approximately 10-fold below those of clothianidin. EPA has not included these metabolites in the tolerance expression for plant or animal commodities because the metabolites are only found in certain commodities, including the metabolites would create tolerance harmonization issues with Canada, and monitoring residues of clothianidin based on parent only would be representative of total clothianidin residues and thus adequate for enforcement. Because the metabolites are not included in the tolerance expressions, an adjustment factor of 1.1 has been incorporated into the assessment for leafy vegetables to account for the presence of the metabolite TMG, and an adjustment factor of 1.5 has been incorporated for livestock-derived commodities (milk) to account for the presence of metabolites TZU, TZG, TZNG, ATMG-pyruvate and ATG-acetate. The 1.1 adjustment factor is based on field trial data showing TMG does not exceed 10% of the parent compound residue level in leafy vegetables and the 1.5 factor was based on metabolism data.

ii. *Chronic exposure.* In conducting the chronic dietary exposure assessment EPA used the food consumption data from the USDA 1994–1996 and 1998 CSFII. As to residue levels in food, EPA assessed chronic dietary exposure using the same residue information and assumptions regarding metabolites/degradates as in the acute exposure analysis.

iii. *Cancer.* Based on the lack of evidence of carcinogenicity in two adequate rodent carcinogenicity studies, EPA has classified clothianidin as "not likely to be carcinogenic to humans." Therefore, a quantitative exposure assessment to evaluate cancer risk is unnecessary.

iv. *Anticipated residue and PCT information.* For food with thiamethoxam tolerances but without colothianidin tolerances, maximum residues of clothianidin observed in thiamethoxam field trials have been used in these assessments. For all commodities, 100 PCT was assumed.

2. *Dietary exposure from drinking water.* The Agency used screening level water exposure models in the dietary exposure analysis and risk assessment for clothianidin in drinking water. These simulation models take into account data on the physical, chemical, and fate/transport characteristics of clothianidin. Further information regarding EPA drinking water models used in pesticide exposure assessment can be found at *http://www.epa.gov/oppefed1/models/water/index.htm.*

Based on the First Index Reservoir Screening Tool (FIRST) and Screening Concentration in Ground Water (SCI–GROW) models, the estimated drinking water concentrations (EDWCs) of clothianidin for surface water are estimated to be 7.29 parts per billion (ppb) for acute exposures and 1.35 ppb for chronic exposures. For ground water, the EDWC is estimated to be 5.88 ppb.

Modeled estimates of drinking water concentrations were directly entered into the dietary exposure model. The water concentration value of 7.29 ppb was used to assess the contribution to drinking water for the acute dietary assessment. For chronic dietary risk assessment, the water concentration value of 5.88 ppb was used.

3. *From non-dietary exposure.* The term "residential exposure" is used in this document to refer to non-occupational, non-dietary exposure (*e.g.,* for lawn and garden pest control, indoor pest control, termiticides, and flea and tick control on pets).

Clothianidin is currently registered for use on turf. Residential handler exposure is not expected from the currently registered or proposed uses of clothianidin since these products are to be applied by commercial applicators. Adult short- and intermediate-term postapplication exposures were assessed for dermal exposures from commercial applications (via granular push-type spreaders), dermal post-application contact and golfer postapplication contact. For toddlers, short- and intermediate-term postapplication incidental oral (hand-to-mouth and soil ingestion) and dermal risks were assessed for exposure to treated turf.

4. *Cumulative effects from substances with a common mechanism of toxicity.* Section 408(b)(2)(D)(v) of FFDCA requires that, when considering whether to establish, modify, or revoke a tolerance, the Agency consider "available information" concerning the cumulative effects of a particular pesticide's residues and "other substances that have a common mechanism of toxicity."

Clothianidin is a member of the neonicotinoid class of pesticides and is

a metabolite of another neonicotinoid, thiamethoxam. Structural similarities or common effects do not constitute a common mechanism of toxicity. Evidence is needed to establish that the chemicals operate by the same, or essentially the same sequence of major biochemical events (EPA, 2002). Although clothianidin and thiamethoxam bind selectively to insect nicotinic acetylcholine receptors (nAChR), the specific binding site(s)/receptor(s) for clothianidin, thiamethoxam, and the other neonicotinoids are unknown at this time. Additionally, the commonality of the binding activity itself is uncertain, as preliminary evidence suggests that clothianidin operates by direct competitive inhibition, while thiamethoxam is a non-competitive inhibitor. Furthermore, even if future research shows that neonicotinoids share a common binding activity to a specific site on insect nAChRs, there is not necessarily a relationship between this pesticidal action and a mechanism of toxicity in mammals. Structural variations between the insect and mammalian nAChRs produce quantitative differences in the binding affinity of the neonicotinoids towards these receptors, which, in turn, confers the notably greater selective toxicity of this class towards insects, including aphids and leafhoppers, compared to mammals. While the insecticidal action of the neonicotinoids is neurotoxic, the most sensitive regulatory endpoint for clothianidin is based on unrelated effects in mammals, including changes in body and thymus weights, delays in sexual maturation, and still births. Additionally, the most sensitive toxicological effect in mammals differs across the neonicotinoids (such as testicular tubular atrophy with thiamethoxam, and mineralized particles in thyroid colloid with imidaclopid). Thus, there is currently no evidence to indicate that neonicotinoids share common mechanisms of toxicity, and EPA is not following a cumulative risk approach based on a common mechanism of toxicity for the neonicotinoids. For information regarding EPA's efforts to determine which chemicals have a common mechanism of toxicity and to evaluate the cumulative effects of such chemicals, see the policy statements concerning common mechanism determinations and procedures for cumulating effects from substances found to have a common mechanism released by OPP on EPA's Web site at *http://www.epa.gov/pesticides/cumulative/.*

D. Safety Factor for Infants and Children

1. *In general.* Section 408(b)(2)(c) of FFDCA provides that EPA shall apply an additional tenfold (10X) margin of safety for infants and children in the case of threshold effects to account for prenatal and postnatal toxicity and the completeness of the database on toxicity and exposure unless EPA determines based on reliable data that a different margin of safety will be safe for infants and children. This additional margin of safety is commonly referred to as the FQPA Safety Factor (SF). In applying this provision, EPA either retains the default value of 10X, or uses a different additional safety factor when reliable data available to EPA support the choice of a different factor.

2. *Prenatal and postnatal sensitivity.* There is no indication of increased quantitative or qualitative susceptibility, as compared to adults, of rat and rabbit fetuses following *in utero* exposure to clothianidin in developmental studies. However, increased quantitative susceptibility was observed in both the developmental neurotoxicity and rat multi-generation reproduction studies. In the developmental neurotoxicity study, offspring toxicity (decreased body weight gains, motor activity and acoustic startle response) was seen at a lower dose than that which caused maternal toxicity. In the 2-generation rat reproduction study, offspring toxicity (decreased body weight gains, delayed sexual maturation in males, decreased absolute thymus weights in F1 pups of both sexes and an increase in stillbirths in both generations) was seen at a dose lower than that which caused parental toxicity.

3. *Conclusion.* In the final rule published in the **Federal Register** of February 6, 2008 (73 FR 6851) (FRL–8346–9), EPA had previously determined that the FQPA SF for clothianidin should be retained at 10X because EPA had required the submission of a developmental immunotoxicity study to address the combination of evidence of decreased absolute and adjusted organ weights of the thymus and spleen in multiple studies in the clothianidin data base, and evidence showing that juvenile rats in the 2-generation reproduction study appear to be more susceptible to these potential immunotoxic effects. In the absence of a developmental immunotoxicity study EPA concluded that there was sufficient uncertainty regarding immunotoxic effects in the young that the 10X FQPA factor should be retained as a database uncertainty factor. Since that determination, EPA has received and reviewed an acceptable/guideline developmental immunotoxicity study, which demonstrated no treatment-related effects. Taking the results of this study into account as well as the rest of the data on clothianidin, EPA has determined that reliable data show the safety of infants and children would be adequately protected if the FQPA SF for clothianidin were reduced to 1X. That decision is based on the following findings:

i. The toxicity database for clothianidin is complete. As noted, the prior data gap concerning developmental immunotoxicity has been addressed by the submission of an acceptable developmental immunotoxicity study.

ii. A rat developmental neurotoxicity study is available and shows evidence of increased quantitative susceptibility of offspring. However, EPA considers the degree of concern for the developmental neurotoxicity study to be low for pre- and postnatal toxicity because the NOAEL and LOAEL were well characterized, and the doses and endpoints selected for risk assessment are protective of the observed susceptibility; therefore, there are no residual concerns regarding effects in the young.

iii. While the rat multi-generation reproduction study showed evidence of increased quantitative susceptibility of offspring compared to adults, the degree of concern is low because the study NOAEL and LOAEL have been selected for risk assessment purposes for relevant exposure routes and durations. In addition, the potential immunotoxic effects observed in the study have been further characterized with the submission of a developmental immunotoxicity study that showed no evidence of susceptibility. As a result, there are no concerns or residual uncertainties for pre- and postnatal toxicity after establishing toxicity endpoints and traditional UFs to be used in the risk assessment for clothianidin.

iv. There are no residual uncertainties identified in the exposure databases. The dietary food exposure assessments were performed based on assumptions that were judged to be highly conservative and health-protective for all durations and population subgroups, including maximum field trial residues, adjustment factors from metabolite data, empirical processing factors, and 100 PCT for all commodities. Additionally, EPA made conservative (protective) assumptions in the ground and surface water modeling used to assess exposure to clothianidin in drinking water. EPA

used similarly conservative assumptions to assess postapplication exposure of children and adults as well as incidental oral exposure of toddlers. These assessments will not underestimate the exposure and risks posed by clothianidin.

E. Aggregate Risks and Determination of Safety

EPA determines whether acute and chronic dietary pesticide exposures are safe by comparing aggregate exposure estimates to the aPAD and cPAD. For linear cancer risks, EPA calculates the probability of additional cancer cases given the estimated aggregate exposure. Short-, intermediate-, and chronic-term risks are evaluated by comparing the estimated aggregate food, water, and residential exposure to the appropriate POD to ensure that an adequate MOE exists.

1. *Acute risk.* Using the exposure assumptions discussed in this unit for acute exposure, the acute dietary exposure from food and water to clothianidin will occupy 23% of the aPAD for children 1–2 years old, the population group receiving the greatest exposure.

2. *Chronic risk.* Using the exposure assumptions described in this unit for chronic exposure, EPA has concluded that chronic exposure to clothianidin from food and water will utilize 19% of the cPAD for children 1–2 years old, the population group receiving the greatest exposure. Based on the explanation in Unit III.C.3., regarding residential use patterns, chronic residential exposure to residues of clothianidin is not expected.

3. *Short- and intermediate-term risk.* Short- and intermediate-term aggregate exposure takes into account short- and intermediate-term residential exposure plus chronic exposure to food and water (considered to be a background exposure level).

Clothianidin is currently registered for use on turf that could result in short- and intermediate-term residential exposure and the Agency has determined that it is appropriate to aggregate chronic exposure through food and water with short- and intermediate-term residential exposures to clothianidin. Using the exposure assumptions described in this unit for short- and intermediate-term exposures, EPA has concluded the combined short- and intermediate-term food, water, and residential exposures result in aggregate MOEs of greater than 380 for all population subgroups. As the aggregate MOEs are greater than 100 (the LOC) for all population subgroups, including infants and children, short- and intermediate-term aggregate exposures to clothianidin are not of concern to EPA.

4. *Aggregate cancer risk for U.S. population.* Based on the lack of evidence of carcinogenicity in mice and rats at doses that were judged to be adequate to assess the carcinogenic potential, clothianidin was classified as "not likely to be carcinogenic to humans," and is not expected to pose a cancer risk to humans.

5. *Determination of safety.* Based on these risk assessments, EPA concludes that there is a reasonable certainty that no harm will result to the general population, or to infants and children from aggregate exposure to clothianidin residues.

IV. Other Considerations

A. Analytical Enforcement Methodology

Adequate enforcement methodology is available to enforce the tolerance expression. This method involves extraction of residues with acetonitrile/water, cleanup using solid phase extraction (SPE) cartridges, and analysis of clothianidin by liquid chromatography/mass spectrometry/mass spectrometry (LC/MS/MS). The method may be requested from: Chief, Analytical Chemistry Branch, Environmental Science Center, 701 Mapes Rd., Ft. Meade, MD 20755–5350; telephone number: (410) 305–2905; e-mail address: *residuemethods@epa.gov.*

B. International Residue Limits

In making its tolerance decisions, EPA seeks to harmonize U.S. tolerances with international standards whenever possible, consistent with U.S. food safety standards and agricultural practices. EPA considers the international maximum residue limits (MRLs) established by the Codex Alimentarius Commission (Codex), as required by FFDCA section 408(b)(4). The Codex Alimentarius is a joint U.N. Food and Agriculture Organization/World Health Organization food standards program, and it is recognized as an international food safety standards-setting organization in trade agreements to which the United States is a party. EPA may establish a tolerance that is different from a Codex MRL; however, FFDCA section 408(b)(4) requires that EPA explain the reasons for departing from the Codex level.

The Codex has not established a MRL for clothianidin in/on mustard, seed.

C. Revisions to Petitioned-For Tolerances

The tolerance is considered appropriate as proposed; therefore, no revisions were needed.

V. Conclusion

Therefore, tolerances are established for residues of clothianidin, (E)-1-(2-chloro-1,3-thiazol-5-ylmethyl)-3-methyl-2-nitroguanidine, in or on mustard, seed at 0.01 ppm.

VI. Statutory and Executive Order Reviews

This final rule establishes tolerances under section 408(d) of FFDCA in response to a petition submitted to the Agency. The Office of Management and Budget (OMB) has exempted these types of actions from review under Executive Order 12866, entitled *Regulatory Planning and Review* (58 FR 51735, October 4, 1993). Because this final rule has been exempted from review under Executive Order 12866, this final rule is not subject to Executive Order 13211, entitled *Actions Concerning Regulations That Significantly Affect Energy Supply, Distribution, or Use* (66 FR 28355, May 22, 2001) or Executive Order 13045, entitled *Protection of Children from Environmental Health Risks and Safety Risks* (62 FR 19885, April 23, 1997). This final rule does not contain any information collections subject to OMB approval under the Paperwork Reduction Act (PRA), 44 U.S.C. 3501 *et seq.,* nor does it require any special considerations under Executive Order 12898, entitled *Federal Actions to Address Environmental Justice in Minority Populations and Low-Income Populations* (59 FR 7629, February 16, 1994).

Since tolerances and exemptions that are established on the basis of a petition under section 408(d) of FFDCA, such as the tolerance in this final rule, do not require the issuance of a proposed rule, the requirements of the Regulatory Flexibility Act (RFA) (5 U.S.C. 601 *et seq.*) do not apply.

This final rule directly regulates growers, food processors, food handlers, and food retailers, not States or Tribes, nor does this action alter the relationships or distribution of power and responsibilities established by Congress in the preemption provisions of section 408(n)(4) of FFDCA. As such, the Agency has determined that this action will not have a substantial direct effect on States or Tribal governments, on the relationship between the national government and the States or Tribal governments, or on the distribution of power and responsibilities among the various levels of government or between the Federal Government and Indian Tribes. Thus, the Agency has determined that Executive Order 13132, entitled *Federalism* (64 FR 43255, August 10, 1999) and Executive Order

13175, entitled *Consultation and Coordination with Indian Tribal Governments* (65 FR 67249, November 9, 2000) do not apply to this final rule. In addition, this final rule does not impose any enforceable duty or contain any unfunded mandate as described under Title II of the Unfunded Mandates Reform Act of 1995 (UMRA) (Pub. L. 104–4).

This action does not involve any technical standards that would require Agency consideration of voluntary consensus standards pursuant to section 12(d) of the National Technology Transfer and Advancement Act of 1995 (NTTAA), Public Law 104–113, section 12(d) (15 U.S.C. 272 note).

VII. Congressional Review Act

The Congressional Review Act, 5 U.S.C. 801 *et seq.,* generally provides that before a rule may take effect, the agency promulgating the rule must submit a rule report to each House of the Congress and to the Comptroller General of the United States. EPA will submit a report containing this rule and other required information to the U.S. Senate, the U.S. House of Representatives, and the Comptroller General of the United States prior to publication of this final rule in the **Federal Register**. This final rule is not a "major rule" as defined by 5 U.S.C. 804(2).

List of Subjects in 40 CFR Part 180

Environmental protection, Administrative practice and procedure, Agricultural commodities, Pesticides and pests, Reporting and recordkeeping requirements.

Dated: April 26, 2011.

G. Jeffrey Herndon,

Acting Director, Registration Division, Office of Pesticide Programs.

Therefore, 40 CFR chapter I is amended as follows:

PART 180—[AMENDED]

■ 1. The authority citation for part 180 continues to read as follows:

Authority: 21 U.S.C. 321(q), 346a and 371.

■ 2. Section 180.586 is amended by alphabetically adding "Mustard, seed" to the table in paragraph (a)(1) to read as follows:

§ 180.586 Clothianidin; tolerances for residues.

(a) * * *

(1) * * *

Commodity	Parts per million
* * * * *	
Mustard, seed	0.01
* * * * *	

* * * * *

[FR Doc. 2011–10706 Filed 5–3–11; 8:45 am]

BILLING CODE 6560–50–P

ENVIRONMENTAL PROTECTION AGENCY

40 CFR Part 1042

Control of Emissions From New and In-Use Marine Compression-Ignition Engines and Vessels; CFR Correction

Correction

In rule document 2011–8794 appearing on pages 20550–20551 in the issue of Wednesday, April 13, 2011, make the following correction:

§ 1042.901 [Corrected]

■ On page 20551, in the first column, in the sixth through ninth lines, the equation should read:

Percent of value = [(Value after modification) (Value before modification)] × 100% ÷ (Value after modification)

[FR Doc. C1–2011–8794 Filed 5–3–11; 8:45 am]

BILLING CODE 1505–01–D

DEPARTMENT OF COMMERCE

National Oceanic and Atmospheric Administration

50 CFR Part 660

[Docket No. 110223162–1268–01]

RIN 0648–XA184

Fisheries Off West Coast States; West Coast Salmon Fisheries; 2011 Management Measures

AGENCY: National Marine Fisheries Service (NMFS), National Oceanic and Atmospheric Administration (NOAA), Commerce.

ACTION: Final rule; request for comments; notice of availability of an environmental assessment.

SUMMARY: NMFS establishes fishery management measures for the 2011 ocean salmon fisheries off Washington, Oregon, and California and the 2012 salmon seasons opening earlier than May 1, 2012. Specific fishery management measures vary by fishery and by area. The measures establish fishing areas, seasons, quotas, legal gear, recreational fishing days and catch limits, possession and landing restrictions, and minimum lengths for salmon taken in the U.S. exclusive economic zone (EEZ) (3–200 NM) off Washington, Oregon, and California. The management measures are intended to prevent overfishing and to apportion the ocean harvest equitably among treaty Indian, non-treaty commercial, and recreational fisheries. The measures are also intended to allow a portion of the salmon runs to escape the ocean fisheries in order to provide for spawning escapement and to provide for inside fisheries (fisheries occurring in state internal waters). This document also announces the availability of an environmental assessment (EA) that analyzes the environmental impacts of implementing the 2011 ocean salmon management measures.

DATES: This final rule is effective from 0001 hours Pacific Daylight Time, May 1, 2011, until the effective date of the 2012 management measures, as published in the **Federal Register**.

Comments must be received by May 19, 2011.

ADDRESSES: You may submit comments, identified by 0648–XA184, by any one of the following methods:

- *Electronic Submissions:* Submit all electronic public comments via the Federal eRulemaking Portal *http://www.regulations.gov.*
- *Fax:* 206–526–6736 Attn: Peggy Busby, or 562–980–4047 Attn: Jennifer Stanford.
- *Mail:* William W. Stelle, Jr., Regional Administrator, Northwest Region, NMFS, 7600 Sand Point Way NE., Seattle, WA 98115–0070 or to Rod McInnis, Regional Administrator, Southwest Region, NMFS, 501 West Ocean Boulevard, Suite 4200, Long Beach, CA 90802–4213.

Instructions: No comments will be posted for public viewing until after the comment period has closed. All comments received are a part of the public record and will generally be posted to *http://www.regulations.gov* without change. All personal identifying information (for example, name, address, *etc.*) voluntarily submitted by the commenter may be publicly accessible. Do not submit confidential business information or otherwise sensitive or protected information.

NMFS will accept anonymous comments (enter N/A in the required fields if you wish to remain anonymous). You may submit attachments to electronic comments in Microsoft Word, Excel, WordPerfect, or Adobe PDF file formats only.

Copies of the documents cited in this document are available from Dr. Donald O. McIsaac, Executive Director, Pacific Fishery Management Council, 7700 NE Ambassador Place, Suite 200, Portland, OR 97220–1384, and are posted on its Web site (*http://www.pcouncil.org*).

Send comments regarding the reporting burden estimate or any other aspect of the collection-of-information requirements in these management measures, including suggestions for reducing the burden, to one of the NMFS addresses listed above and to Office of Management and Budget (OMB), by e-mail at *OIRA.Submission@omb.eop.gov* or by fax at (202) 395–7285.

FOR FURTHER INFORMATION CONTACT: Peggy Busby at 206–526–4323, or Jennifer Stanford at 562–436–2462.

SUPPLEMENTARY INFORMATION:

Background

The ocean salmon fisheries in the EEZ off Washington, Oregon, and California are managed under a "framework" fishery management plan entitled the Pacific Coast Salmon Fishery Management Plan (Salmon FMP). Regulations at 50 CFR part 660, subpart H, provide the mechanism for making preseason and inseason adjustments to the management measures, within limits set by the Salmon FMP, by notification in the **Federal Register**.

The management measures for the 2011 and pre-May 2012 ocean salmon fisheries that are implemented in this final rule were recommended by the Pacific Fishery Management Council (Council) at its April 9 to 15, 2011, meeting.

Schedule Used To Establish 2011 Management Measures

The Council announced its annual preseason management process for the 2011 ocean salmon fisheries in the **Federal Register** on December 21, 2010 (75 FR 80041), and on the Council's Web site at (*http://www.pcouncil.org*). This notice announced the availability of Council documents as well as the dates and locations of Council meetings and public hearings comprising the Council's complete schedule of events for determining the annual proposed and final modifications to ocean salmon fishery management measures. The agendas for the March and April Council meetings were published in the **Federal Register** and posted on the Council's Web site prior to the actual meetings.

In accordance with the Salmon FMP, the Council's Salmon Technical Team (STT) and staff economist prepared four reports for the Council, its advisors, and the public. All four reports were posted on the Council's Web site and otherwise made available to the Council, its advisors, and the public upon their completion. The first of the reports, "Review of 2010 Ocean Salmon Fisheries," was prepared in February when the scientific information necessary for crafting management measures for the 2011 and pre-May 2012 ocean salmon fishery first became available. The first report summarizes biological and socio-economic data for the 2010 ocean salmon fisheries and assesses how well the Council's 2010 management objectives were met. The second report, "Preseason Report I Stock Abundance Analysis and Environmental Assessment Part 1 for 2011 Ocean Salmon Fishery Regulations" (PRE I), provides the 2011 salmon stock abundance projections and analyzes the impacts on the stocks and Council management goals if the 2010 regulations and regulatory procedures were applied to the projected 2011 stock abundances. The completion of PRE I is the initial step in evaluating the full suite of preseason alternatives.

Following completion of the first two reports, the Council met in Vancouver, WA from March 5 to 11, 2011, to develop 2011 management alternatives for proposal to the public. The Council proposed three alternatives for commercial and recreational fisheries management for analysis and public comment. These alternatives consisted of various combinations of management measures designed to protect weak stocks of coho and Chinook salmon, and to provide for ocean harvests of more abundant stocks. After the March Council meeting, the Council's STT and staff economist prepared a third report, "Preseason Report II Proposed Alternatives and Environmental Assessment Part 2 for 2011 Ocean Salmon Fishery Regulations" (PRE II), which analyzes the effects of the proposed 2011 management options.

Public hearings, sponsored by the Council, to receive testimony on the proposed alternatives were held on March 28, 2011, in Westport, WA and Coos Bay, OR; and March 29, 2011, in Eureka, CA. The States of Washington, Oregon, and California sponsored meetings in various forums that also collected public testimony, which was then presented to the Council by each state's Council representative. The Council also received public testimony at both the March and April meetings and received written comments at the Council office.

The Council met from April 9 to 15, 2011, in San Mateo, CA to adopt its final 2011 recommendations. Following the April Council meeting, the Council's STT and staff economist prepared a fourth report, "Preseason Report III Analysis of Council-Adopted Management Measures for 2011 Ocean Salmon Fisheries" (PRE III), which analyzes the environmental and socio-economic effects of the Council's final recommendations. After the Council took final action on the annual ocean salmon specifications in April, it published the recommended management measures in its newsletter and also posted them on the Council Web site (*http://www.pcouncil.org*).

National Environmental Policy Act

The Council's documents described above (PRE I, PRE II, and PRE III) collectively comprise the Environmental Assessment (EA) for this action, providing analysis of environmental and socioeconomic effects under the National Environmental Policy Act (NEPA). The EA and its related Finding of No Significant Impact (FONSI) are posted on the NMFS Northwest Region Web site (*http://www.nwr.noaa.gov*).

Resource Status

Fisheries south of Cape Falcon, OR are limited primarily by the status of Sacramento River winter Chinook salmon and California Coastal Chinook salmon, which are both evolutionarily significant units (ESU) listed under the Endangered Species Act (ESA), and Klamath River fall Chinook salmon. Fisheries north of Cape Falcon are limited by Lower Columbia River Chinook salmon and Lower Columbia River coho salmon, stocks which are also listed under the ESA, and by Thompson River coho from Canada. At the start of the preseason planning process for the 2011 management season, NMFS provided a letter to the Council, dated March 3, 2011, summarizing its ESA consultation standards for listed species as required by the Salmon FMP. The Council's recommended management measures comply with NMFS ESA consultation standards and guidance for those listed salmon species that may be affected by Council fisheries. In most cases, the recommended measures are more restrictive than NMFS's ESA requirements.

The Sacramento River fall Chinook salmon stock (SRFC) is the major contributing stock to ocean Chinook salmon fisheries off Oregon and California. Chinook salmon fisheries south of Cape Falcon were largely closed in 2008 and 2009 to conserve SRFC in response to low preseason abundance forecasts. In 2010, an

improved stock forecast of 245,000 supported limited fisheries south of Cape Falcon. 2010 spawning escapement for SRFC was 125,353, which, while lower than projected, met the stock's conservation objective of 122,000–180,000 adult natural and hatchery spawners. Preseason forecasts for 2011 project a SRFC stock abundance of 729,900 adults.

In 2010, NMFS consulted under ESA section 7 and provided guidance to the Council regarding the effects of Council area fisheries on the Sacramento River winter Chinook salmon ESU. NMFS completed a Biological Opinion that includes a reasonable and prudent alternative (RPA) to avoid jeopardizing the continued existence of this ESU. The RPA includes management area specific fishing season openings and closures, and minimum size limits for both commercial and recreational fisheries. The Council incorporated the RPA into their recommended 2011 management measures.

NMFS last consulted under ESA section 7 regarding the effects of Council area fisheries on California Coastal Chinook salmon in 2005. Klamath River fall Chinook are used as a surrogate to set limits on ocean harvest impacts. The Biological Opinion requires that management measures result in an age-4 ocean harvest rate of no greater than 16%. This objective is met by the Council's recommended 2011 management measures.

Klamath River Fall Chinook (KRFC) were determined to be overfished based on escapement levels below the conservation objective of an average escapement of 33–34% of potential spawners and no fewer than 35,000 naturally spawning adults in 2004, 2005 and 2006. The Council developed and has implemented a rebuilding plan for the past several years, requiring that the fishery be managed for an escapement of the S_{MSY} level of 40,700 (S_{MSY} is the spawning escapement level that is expected to produce the maximum sustainable yield, MSY). Prior to the start of the 2011 preseason planning process, NMFS assessed the status of KRFC and determined that they are rebuilt based on observed escapements from 2007–2010 relative to the S_{MSY} level. Therefore, KRFC are managed in 2011 subject to the conservation objective in the FMP.

In 2010, NMFS consulted under ESA section 7 and provided guidance to the Council regarding the effects of Council area fisheries on the Lower Columbia River (LCR) Chinook salmon ESU. NMFS completed a Biological Opinion that applies to fisheries in 2010 and 2011 concluding that the proposed 2011 fisheries, if managed consistent with the terms of the Biological Opinion, are not likely to jeopardize the continued existence of LCR Chinook. The LCR Chinook salmon ESU is comprised of a spring component, a "far-north" migrating bright component, and a component of north migrating tules. The bright and tule components both have fall run timing. There are twenty-one separate populations within the tule component of this ESU. Unlike the spring or bright populations of the ESU, LCR tule populations are caught in large numbers in Council fisheries, as well as fisheries to the north and in the Columbia River. Therefore, this component of the ESU is the one most likely to constrain Council area fisheries. Total exploitation rate on tule populations has been reduced from 49 percent in 2006, to 42 percent in 2007, 41 percent in 2008, 38 percent in 2009 and 2010, and then to 37 percent in 2011.

In 2008, NMFS conducted an ESA section 7 consultation and issued a biological opinion regarding the effects of Council fisheries and fisheries in the Columbia River on Lower Columbia River (LCR) coho. The states of Oregon and Washington use a harvest matrix for LCR coho, developed by Oregon, following their listing under Oregon's State ESA. Under the matrix the allowable harvest in a given year depends on indicators of marine survival and brood year escapement. The matrix has both ocean and in-river components which can be combined to define a total exploitation rate limit for all ocean and in-river fisheries. Generally speaking, NMFS supports use of management planning tools that allow harvest to vary depending on the year-specific circumstances. Conceptually, we think Oregon's approach is a good one. However, NMFS has taken a more conservative approach for LCR coho in recent years because of unresolved issues related to application of the matrix. NMFS will continue to apply the matrix as we have in the past, by limiting the total harvest to that allowed in the portion of the matrix that applies to ocean fisheries. As a consequence, ocean salmon fisheries under the Council's jurisdiction in 2011, and commercial and recreational salmon fisheries in the mainstem Columbia River, including select area fisheries (*e.g.,* Youngs Bay), must be managed subject to a total exploitation rate limit on LCR coho not to exceed 15 percent. The recommended management measures that would affect LCR coho are consistent with this requirement.

The ESA listing status of Oregon Coast (OC) coho has changed over the years. On February 11, 2008, NMFS again listed OC coho as threatened under the ESA (73 FR 7816 February 11, 2008). Regardless of their listing status, the Council has managed OC coho consistent with the terms of Amendment 13 of the Salmon FMP as modified by the expert advice provided by the 2000 ad hoc Work Group appointed by the Council. NMFS approved the management provisions for OC coho through its section 7 consultation on Amendment 13 in 1999, and has since supported use of the expert advice provided by the Council's ad hoc Work Group. For the 2011 season, the applicable spawner status is in the "high" category, but marine survival index is in the "low" category. Under this circumstance, the Work Group report requires that the exploitation rate be limited to no more than 15 percent. The recommended management measures that would affect OC coho are consistent with this requirement.

Interior Fraser (Thompson River) coho, a Canadian stock, continues to be depressed, remaining in the "low" status category under the Pacific Salmon Treaty and, along with LCR coho, is the coho stock most limiting the 2011 ocean fisheries north of Cape Falcon. The recommended management measures for 2011 satisfy the maximum 10.0 percent total U.S. exploitation rate called for by the Pacific Salmon Treaty agreements and the Salmon FMP.

Management Measures for 2011 Fisheries

The Council-recommended ocean harvest levels and management measures for the 2011 fisheries are designed to apportion the burden of protecting the weak stocks identified and discussed in PRE I equitably among ocean fisheries and to allow maximum harvest of natural and hatchery runs surplus to inside fishery and spawning needs. NMFS finds the Council's recommendations responsive to the goals of the Salmon FMP, the requirements of the resource, and the socioeconomic factors affecting resource users. The recommendations are consistent with the requirements of the Magnuson-Stevens Fishery Conservation and Management Act and U.S. obligations to Indian Tribes with Federally recognized fishing rights, and U.S. international obligations regarding Pacific salmon. Accordingly, NMFS has adopted them.

North of Cape Falcon, the 2011 management measures for non-Indian commercial troll and recreational

fisheries have a significantly lower Chinook salmon quota and a similar coho quota relative to the 2010 season. While Chinook abundance in this area is generally improved in 2011 relative to 2010, restrictions are necessary to meet the exploitation rate limit under ESA consultation for Lower Columbia River (LCR) tule Chinook, which is 37 percent in 2011 compared to 38 percent in 2010. In addition, higher fishing levels are expected in Alaskan and Canadian fisheries, resulting in higher impacts on LCR tule Chinook. The North of Falcon fisheries are also managed to protect threatened Lower Columbia River coho, threatened Oregon Coastal Natural coho, and coho salmon from the Thompson River in Canada. Washington coastal and Puget Sound Chinook generally migrate to the far north and are not significantly affected by ocean salmon harvests from Cape Falcon, OR, to the U.S.-Canada border. Nevertheless, ocean fisheries in combination with fisheries inside Puget Sound are restricted in order to meet ESA related conservation objectives for Puget Sound Chinook. North of Cape Alava, WA, the Council recommended a provision prohibiting retention of chum salmon in the salmon fisheries during August and September to protect ESA listed Hood Canal summer chum. The Council has recommended such a prohibition since 2002 (67 FR 30616, May 7, 2002).

South of Cape Falcon, the commercial salmon fishery will have area specific openings throughout the season for all salmon except coho. As in 2010, there will not be a commercial salmon fishery for coho south of Cape Falcon in 2011. Recreational fisheries south of Cape Falcon will be primarily directed at Chinook salmon, with opportunity for coho limited to the area between Cape Falcon and Humbug Mountain, OR. Recreational fisheries south of Cape Falcon will have area specific openings throughout the season. As noted above, the projected abundance of Sacramento River Fall Chinook is significantly higher in 2011 than in 2010. In consideration of the scientific uncertainty in forecasting SRFC stock abundance, the Council designed management measures for fisheries south of Cape Falcon with the goal of achieving the upper end of the conservation objective escapement of 180,000. In fact, under the management measures in this final rule, and including anticipated in-river fishery impacts, spawning escapement for SRFC is projected at 377,000.

The treaty-Indian commercial troll fishery quota for 2011 is 41,000 Chinook salmon in ocean management areas and Washington State Statistical Area 4B combined. This quota is lower than the 55,000 Chinook salmon quota in 2010, for the same reasons discussed above for the non-Tribal fishery. The treaty-Indian commercial troll fisheries include a Chinook-directed fishery in May and June with a quota of 19,750 Chinook salmon, and an all-salmon season beginning July 1 with a 21,250 Chinook salmon sub-quota. The coho quota for the treaty-Indian troll fishery in ocean management areas, including Washington State Statistical Area 4B, for the July-September period is 42,000 coho, similar to the 41,500 coho quota in 2010.

Management Measures for 2012 Fisheries

The timing of the March and April Council meetings makes it impracticable for the Council to recommend fishing seasons that begin before May 1 of the same year. Therefore, this action also establishes the 2012 fishing seasons that open earlier than May 1. The Council recommended, and NMFS concurs, that the commercial season off Oregon from Cape Falcon to Humbug Mountain, from Humbug Mountain to the Oregon/California border, the recreational season off Oregon from Cape Falcon to Humbug Mountain, and the recreational season off California from Horse Mountain to the U.S./Mexico border will open in 2012 as indicated in the Season Description section of this document. At the March 2012 meeting, the Council may consider inseason recommendations to adjust the commercial season prior to May 1 in the areas off Oregon and the recreational season off Oregon and California.

Inseason Actions

The following sections set out the management regime for the salmon fishery. Open seasons and days are described in Sections 1, 2, and 3 of the 2011 management measures. Inseason closures in the commercial and recreational fisheries are announced on the NMFS hotline and through the U.S. Coast Guard Notice to Mariners as described in Section 6. Other inseason adjustments to management measures are also announced on the hotline and through the Notice to Mariners. Inseason actions will also be published in the **Federal Register** as soon as practicable.

The following are the management measures recommended by the Council and approved and implemented here for 2011 and, as specified, for 2012.

Section 1. Commercial Management Measures for 2011 Ocean Salmon Fisheries

Parts A, B, and C of this section contain restrictions that must be followed for lawful participation in the fishery. Part A identifies each fishing area and provides the geographic boundaries from north to south, the open seasons for the area, the salmon species allowed to be caught during the seasons, and any other special restrictions effective in the area. Part B specifies minimum size limits. Part C specifies special requirements, definitions, restrictions and exceptions.

A. Season Description

North of Cape Falcon, OR

—U.S./Canada Border to Cape Falcon

May 1 through earlier of June 30 or 20,600 Chinook quota. Seven days per week (C.1). All salmon except coho (C.7). Cape Flattery, Mandatory Yelloweye Rockfish Conservation Area, and Columbia Control Zones closed (C.5). See gear restrictions and definitions (C.2, C.3). An inseason conference call will occur when it is projected that 13,700 Chinook have been landed to consider modifying the open period to five days per week and adding landing and possession limits to ensure the guideline is not exceeded.

July 1 through earlier of September 15 or 10,300 preseason Chinook guideline (C.8) or a 12,800 marked coho quota (C.8.d). Friday through Tuesday; landing and possession limit of 50 Chinook and 50 coho per vessel per open period north of Leadbetter Point or 50 Chinook and 50 coho south of Leadbetter Point (C.1). All Salmon except no chum retention north of Cape Alava, Washington in August and September (C.7). All coho must be marked (C.8.d). See gear restrictions and definitions (C.2, C.3). Cape Flattery, Mandatory Yelloweye Rockfish Conservation Area, and Columbia Control Zones closed; Grays Harbor Control Zone closed in August and September (C.5).

Vessels must land and deliver their fish within 24 hours of any closure of this fishery. Under state law, vessels must report their catch on a state fish receiving ticket. Vessels fishing or in possession of salmon while fishing north of Leadbetter Point must land and deliver their fish within the area and north of Leadbetter Point. Vessels fishing or in possession of salmon while fishing south of Leadbetter Point must land and deliver their fish within the area and south of Leadbetter Point, except that Oregon permitted vessels

may also land their fish in Garibaldi, Oregon. Oregon State regulations require all fishers landing salmon into Oregon from any fishery between Leadbetter Point, Washington and Cape Falcon, Oregon must notify ODFW within one hour of delivery or prior to transport away from the port of landing by either calling 541–867–0300 Ext. 271 or sending notification via e-mail to *nfalcon.trollreport@state.or.us.* Notification shall include vessel name and number, number of salmon by species, port of landing and location of delivery, and estimated time of delivery. Inseason actions may modify harvest guidelines in later fisheries to achieve or prevent exceeding the overall allowable troll harvest impacts (C.8).

South of Cape Falcon, OR

—Cape Falcon to Humbug Mountain

April 15 through July 9, July 17 through August 31, October 1–31. (C.9). Seven days per week. All salmon except coho; landing and possession limit of 50 Chinook per vessel per calendar week in October (C.7). All vessels fishing in the area must land their fish in the State of Oregon. See gear restrictions and definitions (C.2, C.3) and Oregon State regulations for a description of special regulations at the mouth of Tillamook Bay.

In 2012, the season will open March 15 for all salmon except coho. This opening may be modified following Council review at its March 2012 meeting.

—Humbug Mountain to Oregon/California Border (Oregon KMZ)

May 1–31;

June 1 through earlier of June 30, or a 1,500 Chinook quota;

July 1 through earlier of July 31, or a 1,200 Chinook quota;

Aug. 1 through earlier of Aug. 31, or a 1,000 Chinook quota (C.9).

Seven days per week. All salmon except coho (C.7). Chinook 28 inch total length minimum size limit (B). June 1 through August 31, landing and possession limit of 30 Chinook per vessel per day. Any remaining portion of the June and/or July Chinook quotas may be transferred inseason on an impact neutral basis to the next open quota period (C.8). All vessels fishing in this area must land and deliver all fish within this area or Port Orford, within 24 hours of any closure in this fishery, and prior to fishing outside of this area (C.1, C.6). Oregon State regulations require all fishers landing salmon from any quota managed season within this area to notify Oregon Dept. of Fish and Wildlife (ODFW) within 1 hour of delivery or prior to transport away from the port of landing by either calling (541) 867–0300 ext. 252 or sending notification via e-mail to *KMZOR.trollreport@state.or.us.* Notification shall include vessel name and number, number of salmon by species, port of landing and location of delivery, and estimated time of delivery. See gear restrictions and definitions (C.2, C.3).

In 2012, the season will open March 15 for all salmon except coho, with a 28 inch Chinook minimum size limit. This opening may be modified following Council review at its March 2012 meeting.

—Oregon/California Border to Humboldt South Jetty (California KMZ)

July 2 through the earlier of July 20 or a 1,400 Chinook quota, Saturday to Wednesday;

Aug. 1 through earlier of Aug. 15 or a 1,000 Chinook quota, seven days per week (C.9).

All salmon except coho (C.7). Chinook 27 inch total length minimum size limit (B). Landing and possession limit of 15 Chinook per vessel. Any remaining portion of the July Chinook quota may be transferred inseason on an impact neutral basis to the August quota (C.8) All vessels fishing in this area must land and deliver all fish within this area, within 24 hours of any closure in this fishery, and prior to fishing outside of this area (C.1, C.6). See compliance requirements (C.1) and gear restrictions and definitions (C.2, C.3). Klamath Control Zone closed (C.5.e). See California State regulations for additional closures adjacent to the Smith and Klamath rivers. When the fishery is closed between the OR/CA border and Humbug Mt. and open to the south, vessels with fish on board caught in the open area off California may seek temporary mooring in Brookings, Oregon prior to landing in California only if such vessels first notify the Chetco River Coast Guard Station via VHF channel 22A between the hours of 0500 and 2200 and provide the vessel name, number of fish on board, and estimated time of arrival.

California State regulations require all salmon be made available to a CDFG representative for sampling immediately at port of landing. Any person in possession of a salmon with a missing adipose fin, upon request by an authorized agent or employee of the CDFG, shall immediately relinquish the head of the salmon to the state (California Fish and Game Code § 8226).

—Humboldt South Jetty to Horse Mountain

Closed.

—Horse Mountain to Point Arena (Fort Bragg)

July 23–27; July 29 through Aug. 29; Sept. 1–30 (C.9).

Seven days per week. All salmon except coho (C.7). Chinook 27 inch total length minimum size limit (B). All fish caught in the area when the KMZ quota fisheries are open must be landed south of Horse Mountain; all fish must be landed in California and offloaded within 24 hours of the August 29 closure (C.1, C.6). See gear restrictions and definitions (C.2, C.3).

California State regulations require all salmon be made available to a CDFG representative for sampling immediately at port of landing. Any person in possession of a salmon with a missing adipose fin, upon request by an authorized agent or employee of the CDFG, shall immediately relinquish the head of the salmon to the state (California Fish and Game Code § 8226).

—Point Arena to Pigeon Point (San Francisco)

May 1–31 seven days per week;

June 25 through July 5 seven days per week;

July 9–27 Saturday through Wednesday;

July 29 through Aug. 29 seven days per week;

September 1–30 seven days per week (C.9).

All salmon except coho (C.7). Chinook minimum size limit of 27 inches total length (B). All fish must be landed in California and offloaded within 24 hours of the August 29 closure. All fish caught in the area when the KMZ quota fisheries are open must be landed south of Horse Mt. (C.1, C.6). See gear restrictions and definitions (C.2, C.3).

• Pt. Reyes to Pt. San Pedro (Fall Area Target Zone)

October 3–14. Monday through Friday. All salmon except coho (C.1). Chinook minimum size limit 27 inches total length (B). All vessels fishing in this area must land and deliver all fish between Point Arena and Pigeon Point (C.1, C.6). See gear restrictions and definitions (C.2, C.3).

California State regulations require all salmon be made available to a CDFG representative for sampling immediately at port of landing. Any person in possession of a salmon with a missing adipose fin, upon request by an authorized agent or employee of the CDFG, shall immediately relinquish the

head of the salmon to the state (California Fish and Game Code § 8226).

—Pigeon Point to Point Sur (Monterey)

May 1–31 seven days per week;
June 25 through July 5 seven days per week;
July 9–27 Saturday through Wednesday;
July 29 through Aug. 29 seven days per week;
September 1–30 seven days per week (C.9).

All salmon except coho (C.7). Chinook minimum size limit of 27 inches total length (B). All fish must be landed in California and offloaded within 24 hours of the August 29 closure. All fish caught in the area when the KMZ quota fisheries are open must be landed south of Horse Mt. (C.1, C.6). See gear restrictions and definitions (C.2, C.3).

California State regulations require all salmon be made available to a CDFG representative for sampling immediately at port of landing. Any person in possession of a salmon with a missing adipose fin, upon request by an authorized agent or employee of the CDFG, shall immediately relinquish the head of the salmon to the state (California Fish and Game Code § 8226).

—Point Sur to U.S./Mexico Border (Monterey South)

May 1 through July 5 seven days per week;
July 9–27 Saturday through Wednesday;
July 29 through Aug. 29 seven days per week (C.9).

All salmon except coho (C.7). Chinook minimum size limit of 27 inches total length (B). All fish must be landed in California and offloaded within 24 hours of the August 29 closure; all fish caught in the area June 1–24 must be landed south of Point San Pedro; all fish caught in the area when the KMZ quota fisheries are open must be landed south of Horse Mountain. (C.1, C.6). See gear restrictions and definitions (C.2, C.3).

California State regulations require that all salmon be made available to a CDFG representative for sampling immediately at port of landing. Any person in possession of a salmon with a missing adipose fin, upon request by an authorized agent or employee of the CDFG, shall immediately relinquish the head of the salmon to the state (California Fish and Game Code § 8226).

B. Minimum Size (Inches) (See C.1)

Area (when open)	Chinook		Coho		Pink
	Total length	Head-off	Total length	Head-off	
North of Cape Falcon, OR	28.0	21.5	16.0	12.0	None.
Cape Falcon to Horse Mt	28.0	21.5	.....	.....	None.
Horse Mt. to U.S.–Mexico Border	27.0	20.5	.....	.....	None.

Metric equivalents: 28.0 in = 71.1 cm, 27.0 in = 68.6 cm, 21.5 in = 54.6 cm, 20.5 in = 52.1 cm, 16.0 in = 40.6 cm, and 12.0 in = 30.5 cm.

C. Special Requirements, Definitions, Restrictions, or Exceptions

C.1. Compliance With Minimum Size or Other Special Restrictions

All salmon on board a vessel must meet the minimum size, landing/possession limit, or other special requirements for the area being fished and the area in which they are landed if the area is open. Salmon may be landed in an area that has been closed more than 96 hours only if the salmon meet the minimum size, landing/possession limit, or other special requirements for the area in which they were caught. Salmon may be landed in an area that has been closed less than 96 hours only if the salmon meet the minimum size, landing/possession limit, or other special requirements for the areas in which they were caught and landed.

States may require fish landing/receiving tickets to be kept on board the vessel for 90 days after landing to account for all previous salmon landings.

C.2. Gear Restrictions

a. Salmon may be taken only by hook and line using single point, single shank, barbless hooks.

b. Cape Falcon, Oregon, to the OR/CA border: No more than 4 spreads are allowed per line.

c. OR/CA border to U.S./Mexico border: No more than 6 lines are allowed per vessel, and barbless circle hooks are required when fishing with bait by any means other than trolling.

C.3. Gear Definitions

Trolling defined: Fishing from a boat or floating device that is making way by means of a source of power, other than drifting by means of the prevailing water current or weather conditions.

Troll fishing gear defined: One or more lines that drag hooks behind a moving fishing vessel. In that portion of the fishery management area (FMA) off Oregon and Washington, the line or lines must be affixed to the vessel and must not be intentionally disengaged from the vessel at any time during the fishing operation.

Spread defined: A single leader connected to an individual lure or bait.

Circle hook defined: A hook with a generally circular shape and a point which turns inward, pointing directly to the shank at a 90°angle.

C.4. Transit Through Closed Areas With Salmon on Board

It is unlawful for a vessel to have troll or recreational gear in the water while transiting any area closed to fishing for a certain species of salmon, while possessing that species of salmon; however, fishing for species other than salmon is not prohibited if the area is open for such species, and no salmon are in possession.

C.5. Control Zone Definitions

a. Cape Flattery Control Zone—The area from Cape Flattery (48°23′00″ N. lat.) to the northern boundary of the U.S. EEZ; and the area from Cape Flattery south to Cape Alava (48°10′00″ N. lat.) and east of 125°05′00″ W. long.

b. Mandatory Yelloweye Rockfish Conservation Area—The area in Washington Marine Catch Area 3 from 48°00.00′ N. lat.; 125°14.00′ W. long. to 48°02.00′ N. lat.; 125°14.00′ W. long. to 48°02.00′ N. lat.; 125°16.50′ W. long. to 48°00.00′ N. lat.; 125°16.50′ W. long. and connecting back to 48°00.00′ N. lat.; 125°14.00′ W. long.

c. Grays Harbor Control Zone—The area defined by a line drawn from the Westport Lighthouse (46°53′18″ N. lat., 124°07′01″ W. long.) to Buoy #2 (46°52′42″ N. lat., 124°12′42″ W. long.) to Buoy #3 (46°55′00″ N. lat., 124°14′48″ W. long.) to the Grays Harbor north jetty (46°36′00″ N. lat., 124°10′51″ W. long.).

d. Columbia Control Zone—An area at the Columbia River mouth, bounded on the west by a line running northeast/southwest between the red lighted Buoy #4 (46°13′35″ N. lat., 124°06′50″ W. long.) and the green lighted Buoy #7 (46°15′09′ N. lat., 124°06′16″ W. long.); on the east, by the Buoy #10 line which bears north/south at 357° true from the south jetty at 46°14′00″ N.

lat.,124°03′07″ W. long. to its intersection with the north jetty; on the north, by a line running northeast/southwest between the green lighted Buoy #7 to the tip of the north jetty (46°15′48″ N. lat., 124°05′20″ W. long.), and then along the north jetty to the point of intersection with the Buoy #10 line; and, on the south, by a line running northeast/southwest between the red lighted Buoy #4 and tip of the south jetty (46°14′03″ N. lat., 124°04′05″ W. long.), and then along the south jetty to the point of intersection with the Buoy #10 line.

e. Klamath Control Zone—The ocean area at the Klamath River mouth bounded on the north by 41°38′48″ N. lat. (approximately six nautical miles north of the Klamath River mouth); on the west, by 124°23′00″ W. long. (approximately 12 nautical miles off shore); and on the south, by 41°26′48″ N. lat. (approximately six nautical miles south of the Klamath River mouth).

C.6. Notification When Unsafe Conditions Prevent Compliance With Regulations

If prevented by unsafe weather conditions or mechanical problems from meeting special management area landing restrictions, vessels must notify the U.S. Coast Guard and receive acknowledgment of such notification prior to leaving the area. This notification shall include the name of the vessel, port where delivery will be made, approximate amount of salmon (by species) on board, the estimated time of arrival, and the specific reason the vessel is not able to meet special management area landing restrictions.

In addition to contacting the U.S. Coast Guard, vessels fishing south of the Oregon/California border must notify CDFG within one hour of leaving the management area by calling 800–889–8346 and providing the same information as reported to the U.S. Coast Guard. All salmon must be offloaded within 24 hours of reaching port.

C.7. Incidental Halibut Harvest

During authorized periods, the operator of a vessel that has been issued an incidental halibut harvest license may retain Pacific halibut caught incidentally in Area 2A while trolling for salmon. Halibut retained must be no less than 32 inches (81.28 cm) in total length, measured from the tip of the lower jaw with the mouth closed to the extreme end of the middle of the tail, and must be landed with the head on. License applications for incidental harvest must be obtained from the International Pacific Halibut Commission (IPHC) (phone: 206–634–1838). Applicants must apply prior to April 1 of each year. Incidental harvest is authorized only during May and June troll seasons and after June 30 if quota remains and if announced on the NMFS hotline (phone: 800–662–9825). ODFW and Washington Department of Fish and Wildlife (WDFW) will monitor landings. If the landings are projected to exceed the 28,126 pound preseason allocation or the total Area 2A non-Indian commercial halibut allocation, NMFS will take inseason action to prohibit retention of halibut in the non-Indian salmon troll fishery.

Beginning May 1, IPHC license holders may possess or land no more than one Pacific halibut per each three Chinook, except one Pacific halibut may be possessed or landed without meeting the ratio requirement, and no more than 35 halibut may be possessed or landed per trip. Pacific halibut retained must be no less than 32 inches in total length (with head on).

A "C-shaped" yelloweye rockfish conservation area (YRCA) is an area to be voluntarily avoided for salmon trolling. NMFS and the Council request salmon trollers voluntarily avoid this area in order to protect yelloweye rockfish. The area is defined in the west coast groundfish regulations at 50 CFR 660.70(c) and in West Coast salmon regulations at 50 CFR 660.405, with the following coordinates in the order listed:

48°18′ N. lat.; 125°18′ W. long.;
48°18′ N. lat.; 124°59′ W. long.;
48°11′ N. lat.; 124°59′ W. long.;
48°11′ N. lat.; 125°11′ W. long.;
48°04′ N. lat.; 125°11′ W. long.;
48°04′ N. lat.; 124°59′ W. long.;
48°00′ N. lat.; 124°59′ W. long.;
48°00′ N. lat.; 125°18′ W. long.;
and connecting back to 48°18′ N. lat.; 125°18′ W. long.

C.8. Inseason Management

In addition to standard inseason actions or modifications already noted under the season description, the following inseason guidance applies:

a. Chinook remaining from the May through June non-Indian commercial troll harvest guideline north of Cape Falcon may be transferred to the July through September harvest guideline on a fishery impact equivalent basis.

b. Chinook remaining from the June and/or July non-Indian commercial troll quotas in the Oregon KMZ may be transferred to the Chinook quota for the next open period on a fishery impact equivalent basis.

c. Chinook remaining from the July non-Indian commercial troll quota in the California KMZ area may be transferred to the August quota on a fishery impact equivalent basis.

d. NMFS may transfer fish between the recreational and commercial fisheries north of Cape Falcon on a fishery impact neutral, fishery equivalent basis if there is agreement among the areas' representatives on the Salmon Advisory Subpanel (SAS).

e. At the March 2012 meeting, the Council will consider inseason recommendations for special regulations for any experimental fisheries (proposals must meet Council protocol and be received in November 2011).

f. If retention of unmarked coho is permitted by inseason action, the allowable coho quota will be adjusted to ensure preseason projected mortality of critical stocks is not exceeded.

g. Landing limits may be modified inseason to sustain season length and keep harvest within overall quotas.

C.9. State Waters Fisheries

Consistent with Council management objectives:

a. The State of Oregon may establish additional late-season fisheries in state waters.

b. The State of California may establish limited fisheries in selected state waters. Check state regulations for details.

C.10. For the purposes of California Department of Fish and Game (CDFG) Code, Section 8232.5, the definition of the Klamath Management Zone (KMZ) for the ocean salmon season is the area from Humbug Mountain, Oregon, to Horse Mountain, California.

Section 2. Recreational Management Measures for 2011 Ocean Salmon Fisheries

Parts A, B, and C of this section contain restrictions that must be followed for lawful participation in the fishery. Part A identifies each fishing area and provides the geographic boundaries from north to south, the open seasons for the area, the salmon species allowed to be caught during the seasons, and any other special restrictions effective in the area. Part B specifies minimum size limits. Part C specifies special requirements, definitions, restrictions and exceptions.

A. Season Description

North of Cape Falcon, OR

—U.S./Canada Border to Cape Falcon

June 18 through earlier of June 25 or a coastwide marked Chinook quota of 4,800 (C.5).

Seven days per week. Two fish per day, all salmon except coho, all Chinook must be marked with a healed adipose

fin clip (C.1). Chinook 24-inch total length minimum size limit (B). See gear restrictions (C.2). Inseason management may be used to sustain season length and keep harvest within the overall Chinook recreational TAC for north of Cape Falcon (C.5).

—U.S./Canada Border to Cape Alava (Neah Bay)

June 26 through earlier of September 18 or 6,990 marked coho subarea quota with a subarea guideline of 3,200 Chinook. (C.5).

Seven days per week. All salmon except no chum beginning August 1; two fish per day, no more than one of which can be a Chinook, plus one additional pink salmon. All coho must be marked (C.1). See gear restrictions (C.2). Beginning August 1, Chinook non-retention east of the Bonilla-Tatoosh line (C.4.a) during Council managed ocean fishery. Inseason management may be used to sustain season length and keep harvest within the overall Chinook and coho recreational TACs for north of Cape Falcon (C.5).

—Cape Alava to Queets River (La Push Subarea)

June 26 through earlier of September 18 or 1,700 marked coho subarea quota with a subarea guideline of 1,350 Chinook. (C.5).

September 24 through earlier of October 9 or 50 marked coho quota or 50 Chinook quota (C.5) in the area north of 47°50′00 N. lat. and south of 48°00′00″ N. lat.

Seven days per week. All salmon; two fish per day, no more than one of which can be a Chinook, plus one additional pink salmon. All coho must be marked (C.1). See gear restrictions (C.2). Inseason management may be used to sustain season length and keep harvest within the overall Chinook and coho recreational TACs for north of Cape Falcon (C.5).

—Queets River to Leadbetter Point (Westport Subarea)

June 26 through earlier of September 18 or 24,860 marked coho subarea quota with a subarea guideline of 16,900 Chinook (C.5).

Sunday through Thursday. All salmon; two fish per day, no more than one of which can be a Chinook. All coho must be marked (C.1). See gear restrictions and definitions (C.2, C.3). Grays Harbor Control Zone closed beginning August 1 (C.4). Inseason management may be used to sustain season length and keep harvest within the overall Chinook and coho recreational TACs for north of Cape Falcon (C.5).

—Leadbetter Point to Cape Falcon (Columbia River Subarea)

June 26 through earlier of September 30 or 33,600 marked coho subarea quota with a subarea guideline of 7,400 Chinook (C.5).

Seven days per week. All salmon; two fish per day, no more than one of which can be a Chinook. All coho must be marked (C.1). See gear restrictions and definitions (C.2, C.3). Columbia Control Zone closed (C.4.c). Inseason management may be used to sustain season length and keep harvest within the overall Chinook and coho recreational TACs for north of Cape Falcon (C.5).

South of Cape Falcon, OR

—Cape Falcon to Humbug Mountain

Except as provided below during the all-salmon mark-selective and non-mark-selective coho fisheries, the season will be March 15 through September 30 (C.6).

All salmon except coho; two fish per day (C.1). See gear restrictions and definitions (C.2, C.3).

Cape Falcon to Humbug Mountain all-salmon mark-selective coho fishery: July 2 through earlier of August 13 or a landed catch of 15,000 marked coho.

Seven days per week. All salmon, two fish per day. All retained coho must be marked (C.1). Any remainder of the mark selective coho quota will be transferred on an impact neutral basis to the September non-selective coho quota listed below. The "all salmon except coho" season reopens the earlier of August 14 or attainment of the coho quota, through August 31.

Cape Falcon to Humbug Mountain non-mark-selective coho fishery: September 1 through the earlier of September 10 or a landed catch of 3,000 non-mark-selective coho quota (C.5).

Thursday through Saturday all salmon, two fish per day;

Sunday through Wednesday, all salmon except coho, two fish per day.

The "all salmon except coho" season reopens the earlier of September 11 or attainment of the coho quota (C.5). Open days may be adjusted inseason to utilize the available coho quota (C.5).

Fishing in the Stonewall Bank yelloweye rockfish conservation area restricted to trolling only on days the all depth recreational halibut fishery is open (call the halibut fishing hotline 1–800–662–9825 for specific dates) (C.3.b, C.4.d).

In 2012, the season between Cape Falcon and Humbug Mountain will open March 15 for all salmon except coho, two fish per day (B, C.1, C.2, C.3).

—Humbug Mountain to Oregon/California Border (Oregon KMZ)

May 14 through September 5 (C.6).

Seven days per week. All salmon except coho, two fish per day (C.1). Chinook minimum size limit of 24 inches total length (B). See gear restrictions and definitions (C.2, C.3).

—Oregon/California Border to Horse Mountain. (California KMZ)

May 14 through September 5 (C.6).

Seven days per week. All salmon except coho; two fish per day (C.1). Chinook minimum size limit of 24 inches total length (B). See gear restrictions and definitions (C.2, C.3). Klamath Control Zone closed in August (C.4.e). See California State regulations for additional closures adjacent to the Smith, Eel, and Klamath Rivers.

California State regulations require that all salmon be made available to a CDFG representative for sampling immediately at port of landing. Any person in possession of a salmon with a missing adipose fin, upon request by an authorized agent or employee of the CDFG, shall immediately relinquish the head of the salmon to the state (California Fish and Game Code § 8226).

—Horse Mountain to Point Arena (Fort Bragg)

April 2 through October 30.

Seven days per week. All salmon except coho; two fish per day (C.1). Chinook minimum size limit of 24 inches total length (B). See gear restrictions and definitions (C.2, C.3).

In 2012, season opens April 7 for all salmon except coho, two fish per day (C.1). Chinook minimum size limit of 24 inches total length (B); and the same gear restrictions as in 2011 (C.2, C.3).

California State regulations require that all salmon be made available to a CDFG representative for sampling immediately at port of landing. Any person in possession of a salmon with a missing adipose fin, upon request by an authorized agent or employee of the CDFG, shall immediately relinquish the head of the salmon to the state (California Fish and Game Code § 8226).

—Point Arena to Pigeon Point (San Francisco)

April 2 through October 30.

Seven days per week. All salmon except coho, two fish per day (C.1). Chinook minimum size limit of 24 inches total length (B). See gear restrictions and definitions (C.2, C.3).

In 2012, season opens April 7 for all salmon except coho, two fish per day (C.1). Chinook minimum size limit of 24

inches total length (B); and the same gear restrictions as in 2011 (C.2, C.3).

California State regulations require that all salmon be made available to a CDFG representative for sampling immediately at port of landing. Any person in possession of a salmon with a missing adipose fin, upon request by an authorized agent or employee of the CDFG, shall immediately relinquish the head of the salmon to the state (California Fish and Game Code § 8226).

—Pigeon Point to U.S./Mexico Border (Monterey South)

April 2 through September 18. Seven days per week. All salmon except coho, two fish per day (C.1). Chinook minimum size limit of 24 inches total length (B). See gear restrictions and definitions (C.2, C.3).

In 2012, season opens April 7 for all salmon except coho, two fish per day (C.1). Chinook minimum size limit of 24 inches total length (B); and the same gear restrictions as in 2011 (C.2, C.3).

California State regulations require that all salmon be made available to a CDFG representative for sampling immediately at port of landing. Any person in possession of a salmon with a missing adipose fin, upon request by an authorized agent or employee of the CDFG, shall immediately relinquish the head of the salmon to the state (California Fish and Game Code § 8226).

B. Minimum Size (Total Length in Inches) (See C.1)

Area (when open)	Chinook	Coho	Pink
North of Cape Falcon	24.0	16.0	None.
Cape Falcon to OR/CA Border	24.0	16.0	None.
OR/CA Border to U.S./Mexico Border	24.0	.....	24.0.

Metric equivalents: 24.0 in = 61.0 cm and 16.0 in = 40.6 cm.

C. Special Requirements, Definitions, Restrictions, or Exceptions

C.1. Compliance With Minimum Size and Other Special Restrictions

All salmon on board a vessel must meet the minimum size or other special requirements for the area being fished and the area in which they are landed if that area is open. Salmon may be landed in an area that is closed only if they meet the minimum size or other special requirements for the area in which they were caught.

Ocean Boat Limits: Off the coast of Washington, Oregon, and California, each fisher aboard a vessel may continue to use angling gear until the combined daily limits of salmon for all licensed and juvenile anglers aboard has been attained (additional state restrictions may apply).

C.2. Gear Restrictions

Salmon may be taken only by hook and line using barbless hooks. All persons fishing for salmon, and all persons fishing from a boat with salmon on board, must meet the gear restrictions listed below for specific areas or seasons.

a. U.S./Canada Border to Point Conception, California: No more than one rod may be used per angler; and no more than two single point, single shank barbless hooks are required for all fishing gear. [*Note:* ODFW regulations in the state-water fishery off Tillamook Bay may allow the use of barbed hooks to be consistent with inside regulations.]

b. Horse Mt., California, to Point Conception, California: Single point, single shank, barbless circle hooks (see gear definitions below) are required when fishing with bait by any means other than trolling, and no more than two such hooks shall be used. When angling with two hooks, the distance between the hooks must not exceed five inches when measured from the top of the eye of the top hook to the inner base of the curve of the lower hook, and both hooks must be permanently tied in place (hard tied). Circle hooks are not required when artificial lures are used without bait.

C.3. Gear Definitions

a. *Recreational fishing gear defined:* Angling tackle consisting of a line with no more than one artificial lure or natural bait attached. Off Oregon and Washington, the line must be attached to a rod and reel held by hand or closely attended; the rod and reel must be held by hand while playing a hooked fish. No person may use more than one rod and line while fishing off Oregon or Washington. Off California, the line must be attached to a rod and reel held by hand or closely attended. Weights directly attached to a line may not exceed four pounds (1.8 kg). While fishing off California north of Point Conception, no person fishing for salmon, and no person fishing from a boat with salmon on board, may use more than one rod and line. Fishing includes any activity which can reasonably be expected to result in the catching, taking, or harvesting of fish.

b. *Trolling defined:* Angling from a boat or floating device that is making way by means of a source of power, other than drifting by means of the prevailing water current or weather conditions.

c. *Circle hook defined:* A hook with a generally circular shape and a point which turns inward, pointing directly to the shank at a 90° angle.

C.4. Control Zone Definitions

a. The Bonilla-Tatoosh Line: A line running from the western end of Cape Flattery to Tatoosh Island Lighthouse (48°23′30″ N. lat., 124°44′12″ W. long.) to the buoy adjacent to Duntze Rock (48°28′00″ N. lat., 124°45′00″ W. long.), then in a straight line to Bonilla Point (48°35′30″ N. lat., 124°43′00″ W. long.) on Vancouver Island, British Columbia.

b. Grays Harbor Control Zone—The area defined by a line drawn from the Westport Lighthouse (46°53′18″ N. lat., 124°07′01″ W. long.) to Buoy #2 (46°52′42″ N. lat., 124°12′42″ W. long.) to Buoy #3 (46°55′00″ N. lat., 124°14′48″ W. long.) to the Grays Harbor north jetty (46°36′00″ N. lat., 124°10′51″ W. long.).

c. Columbia Control Zone: An area at the Columbia River mouth, bounded on the west by a line running northeast/southwest between the red lighted Buoy #4 (46°13′35″ N. lat., 124°06′50″ W. long.) and the green lighted Buoy #7 (46°15′09″ N. lat., 124°06′16″ W. long.); on the east, by the Buoy #10 line which bears north/south at 357° true from the south jetty at 46°14′00″ N. lat., 124°03′07″ W. long. to its intersection with the north jetty; on the north, by a line running northeast/southwest between the green lighted Buoy #7 to the tip of the north jetty (46°15′48″ N. lat., 124°05′20″ W. long.) and then along the north jetty to the point of intersection with the Buoy #10 line; and on the south, by a line running northeast/southwest between the red lighted Buoy #4 and tip of the south jetty (46°14′03″ N. lat., 124°04′05″ W. long.), and then along the south jetty to the point of intersection with the Buoy #10 line.

d. Stonewall Bank Yelloweye Rockfish Conservation Area: The area

defined by the following coordinates in the order listed:

44°37.46′ N. lat.; 124°24.92′ W. long.;
44°37.46′ N. lat.; 124°23.63′ W. long.;
44°28.71′ N. lat.; 124°21.80′ W. long.;
44°28.71′ N. lat.; 124°24.10′ W. long.;
44°31.42′ N. lat.; 124°25.47′ W. long.;
and connecting back to 44°37.46′ N. lat.; 124°24.92′ W. long.

e. Klamath Control Zone: The ocean area at the Klamath River mouth bounded on the north by 41°38′48″ N. lat. (approximately six nautical miles north of the Klamath River mouth); on the west, by 124°23′00″ W. long. (approximately 12 nautical miles off shore); and, on the south, by 41°26′48″ N. lat. (approximately 6 nautical miles south of the Klamath River mouth).

C.5. Inseason Management

Regulatory modifications may become necessary inseason to meet preseason management objectives such as quotas, harvest guidelines, and season duration. In addition to standard inseason actions or modifications already noted under the season description, the following inseason guidance is provided to NMFS:

a. Actions could include modifications to bag limits, or days open to fishing, and extensions or reductions in areas open to fishing.

b. Coho may be transferred inseason among recreational subareas north of Cape Falcon on a fishery impact equivalent basis to help meet the recreational season duration objectives (for each subarea) after conferring with representatives of the affected ports and the Council's SAS recreational representatives north of Cape Falcon.

c. Chinook and coho may be transferred between the recreational and commercial fisheries north of Cape Falcon on a fishery impact equivalent basis if there is agreement among the representatives of the Salmon Advisory Subpanel (SAS).

d. If retention of unmarked coho is permitted in the area from the U.S./Canada border to Cape Falcon, Oregon, by inseason action, the allowable coho quota will be adjusted to ensure preseason projected mortality of critical stocks is not exceeded.

e. Marked coho remaining from the June/July through August Cape Falcon to Oregon/California border recreational coho quota may be transferred inseason to the September Cape Falcon to Humbug Mountain non-mark-selective recreational fishery on a fishery impact equivalent basis.

C.6. Additional Seasons in State Territorial Waters

Consistent with Council management objectives, the states of Washington, Oregon, and California may establish limited seasons in state waters. Check state regulations for details.

Section 3. Treaty Indian Management Measures for 2011 Ocean Salmon Fisheries

Parts A, B, and C of this section contain requirements that must be followed for lawful participation in the fishery.

A. Season Descriptions

U.S./Canada Border to Cape Falcon

May 1 through the earlier of June 30 or 19,750 Chinook quota. All salmon except coho. If the Chinook quota for the May–June fishery is not fully utilized, the excess fish cannot be transferred into the later all-salmon season. If the Chinook quota is exceeded, the excess will be deducted from the later all-salmon season. See size limit (B) and other restrictions (C).

July 1 through the earlier of September 15, or 21,250 preseason Chinook quota, or 42,000 coho quota. All salmon. See size limit (B) and other restrictions (C).

B. Minimum Size (Inches)

Area (when open)	Chinook		Coho		Pink
	Total	Head-off	Total	Head-off	
North of Cape Falcon	24.0	18.0	16.0	12.0	None.

Metric equivalents: 24.0 in = 61.0 cm, 18.0 in = 45.7 cm, 16.0 in = 40.6 cm, and 12.0 in = 30.5 cm.

C. Special Requirements, Restrictions, and Exceptions

C.1. Tribe and Area Boundaries

All boundaries may be changed to include such other areas as may hereafter be authorized by a Federal court for that Tribe's treaty fishery.

S'KLALLAM—Washington State Statistical Area 4B (All).

MAKAH—Washington State Statistical Area 4B and that portion of the FMA north of 48°02′15″ N. lat. (Norwegian Memorial) and east of 125°44′00″ W. long.

QUILEUTE—That portion of the FMA between 48°07′36″ N. lat. (Sand Pt.) and 47°31′42″ N. lat. (Queets River) and east of 125°44′00″ W. long.

HOH—That portion of the FMA between 47°54′18″ N. lat. (Quillayute River) and 47°21′00″ N. lat. (Quinault River) and east of 125°44′00″ W. long.

QUINAULT—That portion of the FMA between 47°40′06″ N. lat. (Destruction Island) and 46°53′18″ N. lat. (Point Chehalis) and east of 125°44′00″ W. long.

C.2. Gear Restrictions

a. Single point, single shank, barbless hooks are required in all fisheries.

b. No more than eight fixed lines per boat.

c. No more than four hand held lines per person in the Makah area fishery (Washington State Statistical Area 4B and that portion of the FMA north of 48°02′15″ N. lat. (Norwegian Memorial) and east of 125°44′00″ W. long.)

C.3. Quotas

a. The quotas include troll catches by the S'Klallam and Makah Tribes in Washington State Statistical Area 4B from May 1 through September 15.

b. The Quileute Tribe will continue a ceremonial and subsistence fishery during the time frame of September 15 through October 15. Fish taken during this fishery are to be counted against treaty troll quotas established for the 2011 season (estimated harvest during the October ceremonial and subsistence fishery: 100 Chinook; 200 coho).

C.4. Area Closures

a. The area within a six nautical mile radius of the mouths of the Queets River (47°31′42″ N. lat.) and the Hoh River (47°45′12″ N. lat.) will be closed to commercial fishing.

b. A closure within two nautical miles of the mouth of the Quinault River (47°21′00″ N. lat.) may be enacted by the Quinault Nation and/or the State of Washington and will not adversely affect the Secretary of Commerce's management regime.

Section 4. Halibut Retention

Under the authority of the Northern Pacific Halibut Act, NMFS promulgated regulations governing the Pacific halibut fishery, which appear at 50 CFR part 300, subpart E. On March 16, 2011, NMFS published a final rule (76 FR 14300) to implement the IPHC's

recommendations, to announce fishery regulations for U.S. waters off Alaska and fishery regulations for treaty commercial and ceremonial and subsistence fisheries, some regulations for non-treaty commercial fisheries for U.S. waters off the West Coast, and approval of and implementation of the Area 2A Pacific halibut Catch Sharing Plan and the Area 2A management measures for 2011. The regulations and management measures provide that vessels participating in the salmon troll fishery in Area 2A (all waters off the States of Washington, Oregon, and California), which have obtained the appropriate IPHC license, may retain halibut caught incidentally during authorized periods in conformance with provisions published with the annual salmon management measures. A salmon troller may participate in the halibut incidental catch fishery during the salmon troll season or in the directed commercial fishery targeting halibut, but not both.

The following measures have been approved by the IPHC, and implemented by NMFS. During authorized periods, the operator of a vessel that has been issued an incidental halibut harvest license may retain Pacific halibut caught incidentally in Area 2A while trolling for salmon. Halibut retained must be no less than 32 inches (81.28 cm) in total length, measured from the tip of the lower jaw with the mouth closed to the extreme end of the middle of the tail, and must be landed with the head on. License applications for incidental harvest must be obtained from the International Pacific Halibut Commission (phone: 206–634–1838). Applicants must apply prior to April 1 of each year. Incidental harvest is authorized only during May and June troll seasons and after June 30 if quota remains and if announced on the NMFS hotline (phone: 800–662–9825). ODFW and WDFW will monitor landings. If the landings are projected to exceed the 28,126 pound preseason allocation or the total Area 2A non-Indian commercial halibut allocation, NMFS will take inseason action to close the incidental halibut fishery.

Beginning May 1, IPHC license holders may possess or land no more than one Pacific halibut per each three Chinook, except one Pacific halibut may be possessed or landed without meeting the ratio requirement, and no more than 35 halibut may be possessed or landed per trip. Pacific halibut retained must be no less than 32 inches in total length (with head on).

NMFS and the Council request that salmon trollers voluntarily avoid a "C-shaped" YRCA (North Coast Recreational YRCA, also known as the Salmon Troll YRCA) in order to protect yelloweye rockfish. Coordinates for the Salmon Troll YRCA are specified in groundfish regulations at 50 CFR660.70(c), and in salmon regulations at 50 CFR 660.405. See Section 1.C.7. in this document for the coordinates.

Section 5. Geographical Landmarks

Wherever the words "nautical miles off shore" are used in this document, the distance is measured from the baseline from which the territorial sea is measured.

Geographical landmarks referenced in this document are at the following locations:

Cape Flattery, WA	48°23′00″ N. lat.
Cape Alava, WA	48°10′00″ N. lat.
Queets River, WA	47°31′42″ N. lat.
Leadbetter Point, WA	46°38′10″ N. lat.
Cape Falcon, OR	45°46′00″ N. lat.
Florence South Jetty, OR	44°00′54″ N. lat.
Humbug Mountain, OR	42°40′30″ N. lat.
Oregon-California Border.	42°00′00″ N. lat.
Humboldt South Jetty, CA.	40°45′53″ N. lat.
Horse Mountain, CA	40°05′00″ N. lat.
Point Arena, CA	38°57′30″ N. lat.
Point Reyes, CA	37°59′44″ N. lat.
Point San Pedro, CA	37°35′40″ N. lat.
Pigeon Point, CA	37°11′00″ N. lat.
Point Sur, CA	36°18′00″ N. lat.
Point Conception, CA	34°27′00″ N. lat.

Section 6. Inseason Notice Procedures

Actual notice of inseason management actions will be provided by a telephone hotline administered by the Northwest Region, NMFS, 206–526–6667 or 800–662–9825, and by U.S. Coast Guard Notice to Mariners broadcasts. These broadcasts are announced on Channel 16 VHF–FM and 2182 KHz at frequent intervals. The announcements designate the channel or frequency over which the Notice to Mariners will be immediately broadcast. Inseason actions will also be filed with the **Federal Register** as soon as practicable. Since provisions of these management measures may be altered by inseason actions, fishermen should monitor either the telephone hotline or Coast Guard broadcasts for current information for the area in which they are fishing.

Classification

This final rule is necessary for conservation and management and is consistent with the Magnuson-Stevens Act. These regulations are being promulgated under the authority of 16 U.S.C. 1855 (d) and 16 U.S.C. 773(c).

This notification of annual management measures is exempt from review under Executive Order 12866.

The provisions of 50 CFR 660.411 state that if, for good cause, an action must be filed without affording a prior opportunity for public comment, the measures will become effective; however, public comments on the action will be received for a period of 15 days after the date of publication in the **Federal Register**. NMFS will receive public comments on this action until May 19, 2011. These regulations are being promulgated under the authority of 16 U.S.C. 1855 (d) and 16 U.S.C. 773(c).

The Assistant Administrator for Fisheries, NOAA (AA) finds good cause under 5 U.S.C. 553(b)(B), to waive the requirement for prior notice and opportunity for public comment, as such procedures are impracticable and contrary to the public interest.

The annual salmon management cycle begins May 1 and continues through April 30 of the following year. May 1 was chosen because the pre-May harvests constitute a relatively small portion of the annual catch. The time-frame of the preseason process for determining the annual modifications to ocean salmon fishery management measures depends on when the pertinent biological data are available. Salmon stocks are managed to meet annual spawning escapement goals or specific exploitation rates. Achieving either of these objectives requires designing management measures that are appropriate for the ocean abundance predicted for that year. These pre-season abundance forecasts, which are derived from the previous year's observed spawning escapement, vary substantially from year to year, and are not available until January and February because spawning escapement continues through the fall.

The preseason planning and public review process associated with developing Council recommendations is initiated in February as soon as the forecast information becomes available. The public planning process requires coordination of management actions of four states, numerous Indian Tribes, and the Federal Government, all of which have management authority over the stocks. This complex process includes the affected user groups, as well as the general public. The process is compressed into a 2-month period which culminates at the April Council meeting at which the Council adopts a recommendation that is forwarded to NMFS for review, approval and implementation of fishing regulations effective on May 1.

Providing opportunity for prior notice and public comments on the Council's recommended measures through a

proposed and final rulemaking process would require 30 to 60 days in addition to the two-month period required for development of the regulations. Delaying implementation of annual fishing regulations, which are based on the current stock abundance projections, for an additional 60 days would require that fishing regulations for May and June be set in the previous year, without the information regarding current stock status. For the 2011 fishing regulations, the current stock status was not available to the Council until February. Because the May and June salmon fisheries are relatively substantial fisheries, managing them with measures developed using the prior year's data could have significant adverse effects on the managed stocks, including ESA-listed stocks. Although salmon fisheries that open prior to May are managed under the prior year's measures, as modified by the Council at its March meeting, relatively little harvest occurs during that period (*e.g.,* on average, less than 5 percent of commercial and recreational harvest occurred prior to May 1 during the years 2001 through 2010). Allowing the much more substantial harvest levels normally associated with the May and June salmon seasons to be promulgated under the prior year's regulations would impair NMFS' ability to protect weak and ESA listed salmon stocks that are impacted by the fishery, and to provide harvest opportunity where appropriate. The choice of May 1 as the beginning of the regulatory season balances the need to gather and analyze the data needed to meet the management objectives of the Salmon FMP and the need to manage the fishery using the best available scientific information.

If these measures are not in place on May 1, the previous year's management measures will continue to apply in most areas. For fisheries south of Cape Falcon, Oregon, this would result in lost fishing opportunities, primarily for commercial fisheries which were more restrictive in 2010 than proposed for 2011. In 2010, commercial fisheries did not open south of Cape Falcon until July, whereas in 2011 these fisheries were opened in April under inseason action, and would remain open beginning May 1 under 2011 management measures. North of Cape Falcon, if 2011 measures are not in place on May 1, there would be excessive harvest of Chinook salmon, as the Chinook salmon quota for commercial fisheries in May and June is half of the 2010 quota for this fishery to protect ESA listed salmon in the Columbia River.

Overall, the annual population dynamics of the various salmon stocks require managers to vary the season structure of the various West Coast area fisheries to both protect weaker stocks and give fishers access to stronger salmon stocks, particularly hatchery produced fish. Failure to implement these measures immediately could compromise the status of certain stocks, or result in foregone opportunity to harvest stocks whose abundance has increased relative to the previous year thereby undermining the purpose of this agency action. Based upon the above-described need to have these measures effective on May 1 and the fact that there is limited time available to implement these new measures after the final Council meeting in April and before the commencement of the ocean salmon fishing year on May 1, NMFS has concluded it is impracticable and contrary to the public interest to provide an opportunity for prior notice and public comment under 5 U.S.C. 553(b)(B).

The Assistant Administrator for Fisheries (AA) also finds that good cause exists under 5 U.S.C. 553(d)(3), to waive the 30-day delay in effectiveness of this final rule. As previously discussed, data are not available until February and management measures not finalized until mid-April. These measures are essential to conserve threatened and endangered ocean salmon stocks, and to provide for harvest of more abundant stocks. Failure to implement these measures immediately could compromise the ability of some stocks to attain their conservation objectives preclude harvest opportunity, and negatively impact anticipated international, state, and Tribal salmon fisheries, thereby undermining the purposes of this agency action.

To enhance notification of the fishing industry of these new measures, NMFS is announcing the new measures over the telephone hotline used for inseason management actions and is also posting the regulations on both of its West Coast regional Web sites (*http://www.nwr.noaa.gov* and *http://swr.nmfs.noaa.gov*). NMFS is also advising the States of Washington, Oregon, and California on the new management measures. These states announce the seasons for applicable state and Federal fisheries through their own public notification systems.

This action contains collection-of-information requirements subject to the Paperwork Reduction Act (PRA), and which have been approved by the Office of Management and Budget (OMB) under control number 0648–0433. The public reporting burden for providing notifications if landing area restrictions cannot be met is estimated to average 15 minutes per response. This estimate includes the time for reviewing instructions, searching existing data sources, gathering and maintaining the data needed, and completing and reviewing the collection of information. Send comments regarding this burden estimate, or any other aspect of this data collection, including suggestions for reducing the burden, to NMFS (see **ADDRESSES**) and by e-mail to *OIRA.Submission@omb.eop.gov,* or fax to 202–395–7285.

Notwithstanding any other provision of the law, no person is required to respond to, nor shall any person be subject to a penalty for failure to comply with, a collection of information subject to the requirements of the PRA, unless that collection of information displays a currently valid OMB control number.

NMFS has current ESA biological opinions that cover fishing under these regulations on all listed salmon species. NMFS reiterated their consultation standards for all ESA listed salmon and steelhead species in their annual Guidance letter to the Council dated March 3, 2011. Some of NMFS past biological opinions have found no jeopardy, and others have found jeopardy, but provided reasonable and prudent alternatives to avoid jeopardy. The management measures for 2011 are consistent with the biological opinions that found no jeopardy, and with the reasonable and prudent alternatives in the jeopardy biological opinions. NMFS consulted in 2010 on the effects of the 2011 annual regulations on LCR Chinook salmon. NMFS concluded that the proposed 2011 fisheries are not likely to jeopardize the continued existence of LCR Chinook salmon. NMFS also consulted in 2010 on the effects of the 2011 annual regulations on Sacramento River winter Chinook salmon. NMFS provided a reasonable and prudent alternative in its jeopardy biological opinion, and the 2011 annual regulations are consistent with that RPA. The Council's recommended management measures therefore comply with NMFS' consultation standards and guidance for all listed salmon species which may be affected by Council fisheries. In some cases, the recommended measures result in impacts that are more restrictive than NMFS' ESA requirements.

In 2009, NMFS consulted on the effects of fishing under the Salmon FMP on the endangered Southern Resident Killer Whale Distinct Population Segment (SRKW) and concluded the salmon fisheries were not likely to

jeopardize SRKW. The 2011 salmon management measures are consistent with the terms of that biological opinion.

This final rule was developed after meaningful consultation and collaboration with the affected Tribes. The Tribal representative on the Council made the motion for the regulations that apply to the Tribal vessels.

Authority: 16 U.S.C. 773–773k; 1801 *et seq.*

Dated: April 28, 2011.

Samuel D. Rauch III,

Deputy Assistant Administrator for Regulatory Programs, National Marine Fisheries Service.

[FR Doc. 2011–10796 Filed 4–29–11; 11:15 am]

BILLING CODE 3510–22–P

Proposed Rules

Federal Register
Vol. 76, No. 86
Wednesday, May 4, 2011

This section of the FEDERAL REGISTER contains notices to the public of the proposed issuance of rules and regulations. The purpose of these notices is to give interested persons an opportunity to participate in the rule making prior to the adoption of the final rules.

DEPARTMENT OF TRANSPORTATION

Federal Aviation Administration

14 CFR Part 39

[Docket No. FAA–2011–0388; Directorate Identifier 2010–NM–004–AD]

RIN 2120–AA64

Airworthiness Directives; Airbus Model A300 B4–600, A300 B4–600R, and A300 F4–600R Series Airplanes, and Model A300 C4–605R Variant F Airplanes (Collectively Called Model A300–600 Series Airplanes); Model A310 Series Airplanes; Model A318 Series Airplanes; Model A319 Series Airplanes; Model A320–211, –212, –214, –231, –232, and –233 Airplanes; Model A321 Series Airplanes; Model A330–200 and A330–300 Series Airplanes; and Model A340–200, A340–300, A340–500, and A340–600 Series Airplanes

AGENCY: Federal Aviation Administration (FAA), DOT.

ACTION: Notice of proposed rulemaking (NPRM).

SUMMARY: We propose to adopt a new airworthiness directive (AD) for the products listed above. This proposed AD results from mandatory continuing airworthiness information (MCAI) originated by an aviation authority of another country to identify and correct an unsafe condition on an aviation product. For Model A310 and A300–600 series airplanes, the MCAI describes the unsafe condition as:

Hamilton Sundstrand (HS), the manufacturer of the RAT [ram air turbine], reported the failure during a wind tunnel test of a balance weight fastening screw on the RAT turbine cover. After investigation, it has been discovered that a batch of screws, which are used to attach the balance washers of the HS RAT Turbine Assembly, has not been subject to the correct heat treatment and are consequently exposed to potential fracture.

This condition, if not corrected, might lead to the ejection of screw heads and consequently to the detachment of the associated balance washers. The loss of balance washers could increase RAT vibrations, which might lead to a possible detachment of RAT parts and consequent loss of RAT functionality. The loss of the RAT, in combination with a total engine flame out, could result in loss of control of the aeroplane.

* * * * *

For Model A318, A319, A320, and A321 series airplanes, the MCAI describes the unsafe condition as:

Hamilton Sundstrand (HS) reported the failure of a balance weight fastening screw on the RAT turbine cover during a wind tunnel test. After investigation, it has been discovered that a batch of screws, used to attach the balance washers of the RAT Turbine assembly, has not received the correct heat treatment, making them more subject to a potential failure.

This condition, if left uncorrected, could lead to the ejection of screw heads and detachment of the associated balance washers. The loss of balance washers would increase RAT vibrations, which could lead to a possible detachment of RAT parts and loss of RAT functionality. The loss of the RAT, in combination with a double engine failure, or a total loss of normal electrical power generation, could result in loss of control of the aeroplane.

* * * * *

For Model A330 and A340 series airplanes, the MCAI describes the unsafe condition as:

Hamilton Sundstrand (HS), the manufacturer of the RAT, reported the failure of a balance weight fastening screw on the RAT cover during a wind tunnel test. After investigation, it has been discovered that a batch of screws, which are used to attach the balance washers of the HS RAT turbine lower gear box assembly, has not been subject to the correct heat treatment and the screws are consequently exposed to potential fracture.

This condition, if not corrected, might lead to the ejection of screw heads and consequently to the detachment of the associated balance washers. The loss of balance washers could increase RAT vibrations, which might lead to a possible detachment of RAT parts, and thus to damage to the aeroplane and risk of injury to persons on the ground.

* * * * *

The proposed AD would require actions that are intended to address the unsafe condition described in the MCAI.

DATES: We must receive comments on this proposed AD by June 20, 2011.

ADDRESSES: You may send comments by any of the following methods:

- *Federal eRulemaking Portal:* Go to *http://www.regulations.gov.* Follow the instructions for submitting comments.
- *Fax:* (202) 493–2251.
- *Mail:* U.S. Department of Transportation, Docket Operations, M–30, West Building Ground Floor, Room W12–140, 1200 New Jersey Avenue, SE., Washington, DC 20590.
- *Hand Delivery:* U.S. Department of Transportation, Docket Operations, M–30, West Building Ground Floor, Room W12–40, 1200 New Jersey Avenue, SE., Washington, DC, between 9 a.m. and 5 p.m., Monday through Friday, except Federal holidays.

For service information identified in this proposed AD, contact the appropriate office listed below. You may review copies of the referenced service information at the FAA, Transport Airplane Directorate, 1601 Lind Avenue, SW., Renton, Washington. For information on the availability of this material at the FAA, call 425–227–1221.

- For Model A300–600 and A310 series airplanes: Airbus SAS—EAW (Airworthiness Office), 1 Rond Point Maurice Bellonte, 31707 Blagnac Cedex, France; telephone +33 5 61 93 36 96; fax +33 5 61 93 44 51; e-mail: *account.airworth-eas@airbus.com;* Internet *http://www.airbus.com.*
- For Model A318, A319, A320, and A321 series airplanes: Airbus, Airworthiness Office—EAS, 1 Rond Point Maurice Bellonte, 31707 Blagnac Cedex, France; telephone +33 5 61 93 36 96; fax +33 5 61 93 44 51; e-mail: *account.airworth-eas@airbus.com;* Internet *http://www.airbus.com.*
- For Model A330 and A340 series airplanes: Airbus SAS—Airworthiness Office—EAL, 1 Rond Point Maurice Bellonte, 31707 Blagnac Cedex, France; telephone +33 5 61 93 36 96; fax +33 5 61 93 45 80; e-mail *airworthiness.A330-A340@airbus.com;* Internet *http://www.airbus.com.*
- For Hamilton Sundstrand service information identified in this AD, contact Hamilton Sundstrand, Technical Publications, Mail Stop 302–9, 4747 Harrison Avenue, P.O. Box 7002, Rockford, IL 61125–7002; telephone 860–654–3575; fax 860–998–4564; e-mail *tech.solutions@hs.utc.com;* Internet *http://www.hamiltonsundstrand.com.*

Examining the AD Docket

You may examine the AD docket on the Internet at *http://www.regulations.gov;* or in person at the Docket Operations office between 9 a.m. and 5 p.m., Monday through Friday, except Federal holidays. The AD docket contains this proposed AD, the regulatory evaluation, any comments received, and other information. The street address for the Docket Operations office (telephone (800) 647–5527) is in the **ADDRESSES** section. Comments will be available in the AD docket shortly after receipt.

FOR FURTHER INFORMATION CONTACT: Dan Rodina, Aerospace Engineer, International Branch, ANM–116, Transport Airplane Directorate, FAA, 1601 Lind Avenue, SW., Renton, Washington 98057–3356; telephone (425) 227–2125; fax (425) 227–1149.

SUPPLEMENTARY INFORMATION:

Comments Invited

We invite you to send any written relevant data, views, or arguments about this proposed AD. Send your comments to an address listed under the **ADDRESSES** section. Include "Docket No. FAA–2011–0388; Directorate Identifier 2010–NM–004–AD" at the beginning of your comments. We specifically invite comments on the overall regulatory, economic, environmental, and energy aspects of this proposed AD. We will consider all comments received by the closing date and may amend this proposed AD based on those comments.

We will post all comments we receive, without change, to *http://www.regulations.gov,* including any personal information you provide. We will also post a report summarizing each substantive verbal contact we receive about this proposed AD.

Discussion

The European Aviation Safety Agency (EASA), which is the Technical Agent for the Member States of the European Community, has issued the EASA airworthiness directives identified in the following table (referred to after this as "the MCAI"), to correct an unsafe condition for the specified products.

TABLE—APPLICABLE EASA ADS

For Model—	EASA AD—	Dated—
A300–600 and A310 series airplanes	2009–0258	December 10, 2009.
A318, A319, A320, and A321 series airplanes	2010–0120	June 21, 2010.
A330 and A340 series airplanes	2009–0260	December 10, 2009 (corrected December 14, 2009).

The MCAI for Model A300–600 and A310 series airplanes states:

Hamilton Sundstrand (HS), the manufacturer of the RAT [ram air turbine], reported the failure during a wind tunnel test of a balance weight fastening screw on the RAT turbine cover. After investigation, it has been discovered that a batch of screws, which are used to attach the balance washers of the HS RAT Turbine Assembly, has not been subject to the correct heat treatment and are consequently exposed to potential fracture.

This condition, if not corrected, might lead to the ejection of screw heads and consequently to the detachment of the associated balance washers. The loss of balance washers could increase RAT vibrations, which might lead to a possible detachment of RAT parts and consequent loss of RAT functionality. The loss of the RAT, in combination with a total engine flame out, could result in loss of control of the aeroplane.

For the reasons described above, this AD requires the identification of the affected RAT turbine assemblies and replacement of all balance weight screws or, in case balance washer detachment is found, replacement of the RAT turbine assembly.

The MCAI for Model A318, A319, A320, and A321 series airplanes states:

Hamilton Sundstrand (HS) reported the failure of a balance weight fastening screw on the RAT turbine cover during a wind tunnel test. After investigation, it has been discovered that a batch of screws, used to attach the balance washers of the RAT Turbine assembly, has not received the correct heat treatment, making them more subject to a potential failure.

This condition, if left uncorrected, could lead to the ejection of screw heads and detachment of the associated balance washers. The loss of balance washers would increase RAT vibrations, which could lead to a possible detachment of RAT parts and loss of RAT functionality. The loss of the RAT, in combination with a double engine failure, or a total loss of normal electrical power generation, could result in loss of control of the aeroplane.

For the reasons described above, EASA AD 2009–0259 was issued in December 2009 to require the replacement of all balance weight screws on the affected RAT turbine assemblies, or replacement of the RAT, if any balancing washer was found missing.

This AD retains some of the requirements of AD 2009–0259, which is superseded, and corrects its applicability by adding Airbus model A320–215 and A320–216 aeroplanes which were inadvertently omitted. Also, this AD requires the replacement of the set of balancing weights screws before the next operational or functional check of the RAT assembly.

The MCAI for Model A330 and A340 series airplanes states:

Hamilton Sundstrand (HS), the manufacturer of the RAT, reported the failure of a balance weight fastening screw on the RAT cover during a wind tunnel test. After investigation, it has been discovered that a batch of screws, which are used to attach the balance washers of the HS RAT turbine lower gear box assembly, has not been subject to the correct heat treatment and the screws are consequently exposed to potential fracture.

This condition, if not corrected, might lead to the ejection of screw heads and consequently to the detachment of the associated balance washers. The loss of balance washers could increase RAT vibrations, which might lead to a possible detachment of RAT parts, and thus to damage to the aeroplane and risk of injury to persons on the ground.

For the reasons described above, this AD requires the identification of the affected RAT turbine lower gear box assemblies and replacement of all balance screws or, in case balance washer detachment is found, replacement of the RAT turbine lower gear box assembly. * * *

You may obtain further information by examining the MCAI in the AD docket.

Relevant Service Information

Airbus has issued the following all operator telexes (AOTs).

TABLE—AIRBUS AOTS

Model	Document	Date
Model A300–600 series airplanes	Airbus AOT A300–29A6062	September 1, 2009.
Model A310 series airplanes	Airbus AOT A310–29A2098	September 1, 2009.

TABLE—AIRBUS AOTS—Continued

Model	Document	Date
Model A318 series airplanes; Model A319 series airplanes; Model A320–211, –212, –214, –231, –232, and –233 airplanes; Model A321 series airplanes.	Airbus AOT A320–29A1150	June 24, 2009.
Model A330–200 and A330–300 series airplanes	Airbus AOT A330–29A3110	September 1, 2009.
Model A340–200 and A340–300 series airplanes	Airbus AOT A340–29A4085	September 1, 2009.
Model A340–500 and A340–600 series airplanes	Airbus AOT A340–500/600–29A5015	September 1, 2009.

Hamilton Sundstrand has issued the following service bulletins.

TABLE—HAMILTON SUNDSTRAND SERVICE BULLETINS

Model	Document	Date
Model A300–600 series airplanes	Hamilton Sundstrand Service Bulletin 732365–29–7	August 4, 2009.
Model A310 series airplanes	Hamilton Sundstrand Service Bulletin 730816–29–15	August 4, 2009.
Model A318 series airplanes; Model A319 series airplanes; Model A320–211, –212, –214, –231, –232, and –233 airplanes; Model A321 series airplanes.	Hamilton Sundstrand Service Bulletin ERPS08M–29–8	June 17, 2009.
Model A330–200 and A330–300 series airplanes and Model A340–200 and A340–300 series airplanes.	Hamilton Sundstrand Service Bulletin ERPS06G–29–6	July 20, 2009.
Model A340–500 and A340–600 series airplanes	Hamilton Sundstrand Service Bulletin ERPS33G–29–1	July 20, 2009.

The actions described in this service information are intended to correct the unsafe condition identified in the MCAI.

FAA's Determination and Requirements of This Proposed AD

This product has been approved by the aviation authority of another country, and is approved for operation in the United States. Pursuant to our bilateral agreement with the State of Design Authority, we have been notified of the unsafe condition described in the MCAI and service information referenced above. We are proposing this AD because we evaluated all pertinent information and determined an unsafe condition exists and is likely to exist or develop on other products of the same type design.

Differences Between This AD and the MCAI or Service Information

We have reviewed the MCAI and related service information and, in general, agree with their substance. But we might have found it necessary to use different words from those in the MCAI to ensure the AD is clear for U.S. operators and is enforceable. In making these changes, we do not intend to differ substantively from the information provided in the MCAI and related service information.

We might also have proposed different actions in this AD from those in the MCAI in order to follow FAA policies. Any such differences are highlighted in a Note within the proposed AD.

Costs of Compliance

Based on the service information, we estimate that this proposed AD would affect about 1,004 products of U.S. registry. We also estimate that it would take about 2 work-hours per product to comply with the basic requirements of this proposed AD. The average labor rate is $85 per work-hour. Required parts would cost about $100 per product. Where the service information lists required parts costs that are covered under warranty, we have assumed that there will be no charge for these costs. As we do not control warranty coverage for affected parties, some parties may incur costs higher than estimated here. Based on these figures, we estimate the cost of the proposed AD on U.S. operators to be $271,080, or $270 per product.

Authority for This Rulemaking

Title 49 of the United States Code specifies the FAA's authority to issue rules on aviation safety. Subtitle I, section 106, describes the authority of the FAA Administrator. "Subtitle VII: Aviation Programs," describes in more detail the scope of the Agency's authority.

We are issuing this rulemaking under the authority described in "Subtitle VII, Part A, Subpart III, Section 44701: General requirements." Under that section, Congress charges the FAA with promoting safe flight of civil aircraft in air commerce by prescribing regulations for practices, methods, and procedures the Administrator finds necessary for safety in air commerce. This regulation is within the scope of that authority because it addresses an unsafe condition that is likely to exist or develop on products identified in this rulemaking action.

Regulatory Findings

We determined that this proposed AD will not have federalism implications under Executive Order 13132. This proposed AD will not have a substantial direct effect on the States, on the relationship between the national government and the States, or on the distribution of power and responsibilities among the various levels of government.

For the reasons discussed above, I certify this AD:

1. Is not a "significant regulatory action" under Executive Order 12866;

2. Is not a "significant rule" under the DOT Regulatory Policies and Procedures (44 FR 11034, February 26, 1979); and

3. Will not have a significant economic impact, positive or negative, on a substantial number of small entities under the criteria of the Regulatory Flexibility Act.

We prepared a regulatory evaluation of the estimated costs to comply with this proposed AD and placed it in the AD docket.

List of Subjects in 14 CFR Part 39

Air transportation, Aircraft, Aviation safety, Incorporation by reference, Safety.

The Proposed Amendment

Accordingly, under the authority delegated to me by the Administrator, the FAA proposes to amend 14 CFR part 39 as follows:

PART 39—AIRWORTHINESS DIRECTIVES

1. The authority citation for part 39 continues to read as follows:

Authority: 49 U.S.C. 106(g), 40113, 44701.

§ 39.13 [Amended]

2. The FAA amends § 39.13 by adding the following new AD:

Airbus: Docket No. FAA–2011–0388; Directorate Identifier 2010–NM–004–AD.

Comments Due Date

(a) We must receive comments by June 20, 2011.

Affected ADs

(b) None.

Applicability

(c) This AD applies to the Airbus airplanes listed in paragraphs (c)(1), (c)(2), (c)(3), (c)(4), and (c)(5) of this AD, certificated in any category.

(1) Airbus Model A300 B4–601, B4–603, B4–620, B4–622, B4–605R, B4–622R, F4–605R, F4–622R, and C4–605R Variant F airplanes; and Model A310–203, –204, –221, –222, –304, –322, –324, and –325 airplanes; all certified models, all manufacturer serial numbers, if equipped with a Hamilton Sundstrand ram air turbine (RAT) turbine assembly, as identified by part number (P/N) in Hamilton Sundstrand Service Bulletin 730816–29–15, dated August 4, 2009 (for Model A310 airplanes), and Hamilton Sundstrand Service Bulletin 732365–29–7, dated August 4, 2009 (for Model A300–600 series airplanes); or equipped with a Hamilton Sundstrand RAT turbine lower gear box assembly on which the part number cannot be determined.

(2) Airbus Model A318–111, –112, –121, and –122 airplanes; Model A319–111, –112, –113, –114, –115, –131, –132, and –133 airplanes; Model A320–211, –212, –214, –231, –232, and –233 airplanes; and Model A321–111, –112, –131, –211, –212, –213, –231, and –232 airplanes; all manufacturer serial numbers, if equipped with a Hamilton Sundstrand RAT turbine assembly Model ERPS08M, as identified by part number in Hamilton Sundstrand Service Bulletin ERPS08M–29–8, dated June 17, 2009; or equipped with a Hamilton Sundstrand RAT turbine lower gear box assembly on which the part number cannot be determined.

(3) Airbus Model A330–201, –202, –203, –223, –243, –301, –302, –303, –321, –322, –323, –341, –342, and –343 airplanes; all manufacturer serial numbers, if equipped with a Hamilton Sundstrand RAT turbine lower gearbox assembly, as identified by part number in Hamilton Sundstrand Service Bulletin ERPS06G–29–6, dated July 20, 2009; or equipped with a Hamilton Sundstrand RAT turbine lower gear box assembly on which the part number cannot be determined.

(4) Model A340–211, –212, –213, –311, –312, and –313 airplanes; all manufacturer serial numbers, if equipped with a Hamilton Sundstrand RAT turbine lower gearbox assembly, as identified by part number in Hamilton Sundstrand Service Bulletin ERPS06G–29–6, dated July 20, 2009; or equipped with a Hamilton Sundstrand RAT turbine lower gear box assembly on which the part number cannot be determined.

(5) Model A340–541 and –642 airplanes, all manufacturer serial numbers, if equipped with a Hamilton Sundstrand RAT turbine lower gearbox assembly, as identified by part number in Hamilton Sundstrand Service Bulletin ERPS33G–29–1, dated July 20, 2009; or equipped with a Hamilton Sundstrand RAT turbine lower gear box assembly on which the part number cannot be determined.

Subject

(d) Air Transport Association (ATA) of America Code 29: Hydraulic power.

Reason

(e) For Model A310 and A300–600 series airplanes, the MCAI describes the unsafe condition as:

Hamilton Sundstrand (HS), the manufacturer of the RAT, reported the failure during a wind tunnel test of a balance weight fastening screw on the RAT turbine cover. After investigation, it has been discovered that a batch of screws, which are used to attach the balance washers of the HS RAT Turbine Assembly, has not been subject to the correct heat treatment and are consequently exposed to potential fracture.

This condition, if not corrected, might lead to the ejection of screw heads and consequently to the detachment of the associated balance washers. The loss of balance washers could increase RAT vibrations, which might lead to a possible detachment of RAT parts and consequent loss of RAT functionality. The loss of the RAT, in combination with a total engine flame out, could result in loss of control of the aeroplane.

* * * * *

For Model A318, A319, A320, and A321 series airplanes, the MCAI describes the unsafe condition as:

Hamilton Sundstrand (HS) reported the failure of a balance weight fastening screw on the RAT turbine cover during a wind tunnel test. After investigation, it has been discovered that a batch of screws, used to attach the balance washers of the RAT Turbine assembly, has not received the correct heat treatment, making them more subject to a potential failure.

This condition, if left uncorrected, could lead to the ejection of screw heads and detachment of the associated balance washers. The loss of balance washers would increase RAT vibrations, which could lead to a possible detachment of RAT parts and loss of RAT functionality. The loss of the RAT, in combination with a double engine failure, or a total loss of normal electrical power generation, could result in loss of control of the aeroplane.

* * * * *

For Model A330 and A340 series airplanes, the MCAI describes the unsafe condition as:

Hamilton Sundstrand (HS), the manufacturer of the RAT, reported the failure of a balance weight fastening screw on the RAT cover during a wind tunnel test. After investigation, it has been discovered that a batch of screws, which are used to attach the balance washers of the HS RAT turbine lower gear box assembly, has not been subject to the correct heat treatment and the screws are consequently exposed to potential fracture.

This condition, if not corrected, might lead to the ejection of screw heads and consequently to the detachment of the associated balance washers. The loss of balance washers could increase RAT vibrations, which might lead to a possible detachment of RAT parts, and thus to damage to the aeroplane and risk of injury to persons on the ground.

* * * * *

Compliance

(f) You are responsible for having the actions required by this AD performed within the compliance times specified, unless the actions have already been done.

Actions

(g) At the applicable time specified in paragraph (g)(1), (g)(2), or (g)(3) of this AD: Inspect to determine the part number and serial number of the RAT turbine lower gear box assembly, in accordance with the applicable Airbus all operator telex (AOT) identified in Table 1 of this AD. If the RAT turbine lower gear box assembly has a part number and a serial number that are not listed in the applicable Hamilton Sundstrand service bulletin identified in Table 2 of this AD, no further action is required by this AD, except as required by paragraph (k) of this AD. A review of airplane maintenance records is acceptable in lieu of this inspection if the part and serial numbers of the RAT turbine lower gear box assembly can be conclusively determined from that review.

TABLE 1—AIRBUS AOTS

Model	Document	Date
Model A300–600 series airplanes	Airbus AOT A300–29A6062	September 1, 2009.
Model A310 series airplanes	Airbus AOT A310–29A2098	September 1, 2009.

TABLE 1—AIRBUS AOTS—Continued

Model	Document	Date
Model A318 series airplanes; Model A319 series airplanes; Model A320–211, –212, –214, –231, –232, and –233 airplanes; Model A321 series airplanes.	Airbus AOT A320–29A1150	June 24, 2009.
Model A330–200 and A330–300 series airplanes	Airbus AOT A330–29A3110	September 1, 2009.
Model A340–200 and A340–300 series airplanes	Airbus AOT A340–29A4085	September 1, 2009.
Model A340–500 and A340–600 series airplanes	Airbus AOT A340–500/600–29A5015	September 1, 2009.

(1) For airplanes identified in paragraph (c)(1) of this AD: Before the next RAT spin test, or within 1,500 flight hours or 9 months after the effective date of this AD, whichever occurs first.

(2) For airplanes identified in paragraph (c)(2) of this AD: Before the next RAT spin test, or within 3,000 flight hours or 12 months after the effective date of this AD, whichever occurs first.

(3) For airplanes identified in paragraph (c)(3), (c)(4), and (c)(5) of this AD: Before the next RAT spin test, or within 3,000 flight hours or 8 months after the effective date of this AD, whichever occurs first.

(h) If, during the inspection required by paragraph (g) of this AD, the RAT turbine lower gear box assembly has a part number and a serial number identified in the applicable Hamilton Sundstrand service bulletin specified in Table 2 of this AD; or if the part number or serial number of the RAT turbine lower gear box assembly cannot be determined: Before further flight, inspect the RAT turbine lower gear box assembly to determine if the nameplate is identified with the applicable symbol specified in Table 3 of this AD, in accordance with the applicable Airbus AOT specified in Table 1 of this AD. If the RAT turbine lower gear box assembly nameplate has the applicable symbol that is identified in Table 3 of this AD, no further action is required by this AD except as required by paragraph (k) of this AD. A review of airplane maintenance records is acceptable in lieu of this inspection if the symbol identified on the nameplate can be conclusively determined from that review.

TABLE 2—APPLICABLE HAMILTON SUNDSTRAND SERVICE BULLETINS

Model	Document	Date
Model A300–600 series airplanes	Hamilton Sundstrand Service Bulletin 732365–29–7	August 4, 2009.
Model A310 series airplanes	Hamilton Sundstrand Service Bulletin 730816–29–15	August 4, 2009.
Model A318 series airplanes; Model A319 series airplanes; Model A320–211, –212, –214, –231, –232, and –233 airplanes; Model A321 series airplanes.	Hamilton Sundstrand Service Bulletin ERPS08M–29–8	June 17, 2009.
Model A330–200 and A330–300 series airplanes and Model A340–200 and A340–300 series airplanes.	Hamilton Sundstrand Service Bulletin ERPS06G–29–6	July 20, 2009.
Model A340–500 and A340–600 series airplanes	Hamilton Sundstrand Service Bulletin ERPS33G–29–1	July 20, 2009.

TABLE 3—NAMEPLATE IDENTIFICATION

Model	Symbol
Model A300–600 series airplanes	29–7
Model A310 series airplanes	29–15
Model A318 series airplanes; Model A319 series airplanes; Model A320–211, –212, –214, –231, –232, and –233 airplanes; Model A321 series airplanes.	29–8
Model A330–200 and A330–300 series airplanes	29–6
Model A340–200 and A340–300 series airplanes	29–6
Model A340–500 and A340–600 series airplanes	29–1

(i) If, during the inspection required by paragraph (h) of this AD, the RAT turbine lower gear box assembly does not have the applicable symbol specified in Table 3 of this AD: Before further flight, do a general visual inspection for the missing and fractured balance screws and for missing washers in accordance with the applicable Airbus AOT specified in Table 1 of this AD.

(1) If all balance screws are fitted on the turbine and are not fractured or missing, at the applicable time specified in paragraph (i)(1)(i), (i)(1)(ii), or (i)(1)(iii) of this AD: Replace the RAT turbine lower gear box assembly with a new or serviceable RAT turbine lower gear box assembly, or replace all balance screws on the RAT turbine lower gear box assembly with new or serviceable balance screws, in accordance with the applicable Airbus AOT specified in Table 1 of this AD.

(i) For airplanes identified in paragraph (c)(1) of this AD: Within 1,500 flight hours or 9 months after the effective date of this AD, whichever occurs first.

(ii) For airplanes identified in paragraph (c)(2) of this AD: Within 3,000 flight hours or 12 months after the effective date of this AD, whichever occurs first.

(iii) For airplanes identified in paragraphs (c)(3), (c)(4), and (c)(5) of this AD: Within 3,000 flight hours or 8 months after the effective date of this AD, whichever occurs first.

(2) If one or more screws are fractured but the associated balance washers are still fitted on the RAT turbine lower gear box assembly, before further flight, do the actions specified in paragraph (i)(2)(i) or (i)(2)(ii) of this AD, in accordance with the applicable Airbus AOT specified in Table 1 of this AD.

(i) Replace the RAT turbine lower gear box assembly with a new or serviceable RAT turbine lower gear box assembly.

(ii) Replace all balance screws on the RAT turbine lower gear box assembly with new or serviceable balance screws, including replacing any missing washers.

(3) If one or more screws are fractured and any balance washer is missing, before further flight, replace the RAT turbine lower gear box assembly with new or serviceable RAT turbine lower gear box assembly, in accordance with the applicable Airbus AOT specified in Table 1 of this AD.

Reporting Requirement

(j) At the applicable time specified in paragraph (j)(1) or (j)(2) of this AD, submit a report of the findings (both positive and negative) of the inspection required by paragraph (i) of this AD to Airbus, as specified in Paragraph 7 of the applicable

AOT specified in Table 1 of this AD. The report must include the inspection results, a description of any discrepancies found, the airplane serial number, and the number of landings and flight hours on the airplane.

(1) If the inspection was done on or after the effective date of this AD: Submit the report within 30 days after the inspection.

(2) If the inspection was done before the effective date of this AD: Submit the report within 30 days after the effective date of this AD.

Parts Installation

(k) As of the effective date of this AD, no person may install, on any airplane, a RAT turbine lower gear box assembly, as identified by part number in the applicable Hamilton Sundstrand service bulletin specified in Table 2 of this AD, unless it has been inspected and all applicable corrective actions have been done, in accordance with the requirements of this AD.

FAA AD Differences

Note 1: This AD differs from the MCAI and/or service information as follows: No differences.

Other FAA AD Provisions

(l) The following provisions also apply to this AD:

(1) *Alternative Methods of Compliance (AMOCs):* The Manager, International Branch, ANM–116, Transport Airplane Directorate, FAA, has the authority to approve AMOCs for this AD, if requested using the procedures found in 14 CFR 39.19. In accordance with 14 CFR 39.19, send your request to your principal inspector or local Flight Standards District Office, as appropriate. If sending information directly to the International Branch, send it to ATTN: Dan Rodina, Aerospace Engineer, International Branch, ANM–116, Transport Airplane Directorate, FAA, 1601 Lind Avenue, SW., Renton, Washington 98057–3356; telephone (425) 227–2125; fax (425) 227–1149. Before using any approved AMOC, notify your appropriate principal inspector, or lacking a principal inspector, the manager of the local flight standards district office/certificate holding district office. The AMOC approval letter must specifically reference this AD.

(2) *Airworthy Product:* For any requirement in this AD to obtain corrective actions from a manufacturer or other source, use these actions if they are FAA-approved. Corrective actions are considered FAA-approved if they are approved by the State of Design Authority (or their delegated agent). You are required to assure the product is airworthy before it is returned to service.

(3) *Reporting Requirements:* A Federal agency may not conduct or sponsor, and a person is not required to respond to, nor shall a person be subject to a penalty for failure to comply with a collection of information subject to the requirements of the Paperwork Reduction Act unless that collection of information displays a current valid OMB Control Number. The OMB Control Number for this information collection is 2120–0056. Public reporting for this collection of information is estimated to be approximately 5 minutes per response, including the time for reviewing instructions, and completing and reviewing the collection of information. All responses to this collection of information are mandatory. Comments concerning the accuracy of this burden and suggestions for reducing the burden should be directed to the FAA at: 800 Independence Ave., SW., Washington, DC 20591, Attn: Information Collection Clearance Officer, AES–200.

Related Information

(m) Refer to the applicable MCAI European Aviation Safety Agency (EASA) AD specified in Table 4 of this AD, the Airbus AOTs specified in Table 1 of this AD, and the Hamilton Sundstrand service bulletins specified in Table 2 of this AD, for related information.

TABLE 4—EASA ADS

For model—	EASA AD—	Dated—
A300–600 and A310 series airplanes	2009–0258	December 10, 2009.
A318, A319, A320, and A321 series airplanes	2010–0120	June 21, 2010.
A330 and A340 series airplanes	2009–0260	December 10, 2009 (corrected December 14, 2009).

Issued in Renton, Washington, on April 26, 2011.

Kalene C. Yanamura,

Acting Manager, Transport Airplane Directorate, Aircraft Certification Service.

[FR Doc. 2011–10816 Filed 5–3–11; 8:45 am]

BILLING CODE 4910–13–P

DEPARTMENT OF TRANSPORTATION

Federal Aviation Administration

14 CFR Part 39

[Docket No. FAA–2011–0450; Directorate Identifier 2011–CE–010–AD]

RIN 2120–AA64

Airworthiness Directives; Cessna Aircraft Company (Cessna) Models 337, 337A (USAF 02B), 337B, 337C, 337D, 337E, T337E, 337F, T337F, 337G, T337G, M337B, F 337E, FT337E, F 337F, FT337F, F 337G, and FT337GP Airplanes

AGENCY: Federal Aviation Administration (FAA), DOT.

ACTION: Notice of proposed rulemaking (NPRM).

SUMMARY: We propose to adopt a new airworthiness directive (AD) for the products listed above. This proposed AD would require inspecting the wings for internal and external damage, repairing any damage, reinforcing the wings, installing operational limitation placards in the cockpit, and adding limitations to the airplane flight manual supplement. This proposed AD was prompted by a review of installed Flint Aero, Inc. wing tip auxiliary fuel tanks, Supplemental Type Certificate (STC) SA5090NM. We are issuing this proposed AD to detect and correct damage in the wings and to prevent overload failure of the wing due to the installation of the STC. Damage in the wing or overload failure of the wing could result in structural failure of the wing, which could result in loss of control.

DATES: We must receive comments on this proposed AD by June 20, 2011.

ADDRESSES: You may send comments by any of the following methods:

- *Federal eRulemaking Portal:* Go to *http://www.regulations.gov.* Follow the instructions for submitting comments.
- *Fax:* 202–493–2251.
- *Mail:* U.S. Department of Transportation, Docket Operations, M–30, West Building Ground Floor, Room W12–140, 1200 New Jersey Avenue, SE., Washington, DC 20590.
- *Hand Delivery:* Deliver to Mail address above between 9 a.m. and 5 p.m., Monday through Friday, except Federal holidays.

For service information identified in this proposed AD, contact Flint Aero, Inc., 1942 Joe Crosson Drive, El Cajon, CA 92020; phone: (619) 448–1551; fax: (619) 448–1571; Internet: *http://www.flintaero.com.* You may review copies of the referenced service information at the FAA, Small Airplane Directorate, 901 Locust, Kansas City, MO 64106. For information on the availability of this material at the FAA, call (816) 329–4148.

Examining the AD Docket

You may examine the AD docket on the Internet at *http://*

www.regulations.gov; or in person at the Docket Management Facility between 9 a.m. and 5 p.m., Monday through Friday, except Federal holidays. The AD docket contains this proposed AD, the regulatory evaluation, any comments received, and other information. The street address for the Docket Office (phone: 800–647–5527) is in the **ADDRESSES** section. Comments will be available in the AD docket shortly after receipt.

FOR FURTHER INFORMATION CONTACT: Dara Albouyeh, Aerospace Engineer, FAA, Los Angeles Aircraft Certification Office, 3960 Paramount Blvd., Lakewood, CA 90712; phone: (562) 627–5222; fax: (562) 627–5210; e-mail: *dara.albouyeh@faa.gov.*

SUPPLEMENTARY INFORMATION:

Comments Invited

We invite you to send any written relevant data, views, or arguments about this proposal. Send your comments to an address listed under the **ADDRESSES** section. Include "Docket No. FAA–2011–0450; Directorate Identifier 2011–CE–010–AD" at the beginning of your comments. We specifically invite comments on the overall regulatory, economic, environmental, and energy aspects of this proposed AD. We will consider all comments received by the closing date and may amend this proposed AD because of those comments.

We will post all comments we receive, without change, to *http://www.regulations.gov,* including any personal information you provide. We will also post a report summarizing each substantive verbal contact we receive about this proposed AD.

Discussion

In May 2010, we reviewed wing tip auxiliary fuel tank extension STCs to Cessna 336 and 337 series airplanes for compliance with airworthiness standards. Due to the STC similarities between Aviation Enterprises wing tip auxiliary fuel tank extensions and Flint Aero, Inc. wing tip auxiliary fuel tank extensions, both were reviewed for possible wing overload conditions.

In June 2010, we determined the proper design loads for both Aviation Enterprises wing tip auxiliary fuel tank extension and Flint Aero, Inc. wing tip auxiliary fuel tank extension STCs exceeded the strength capabilities of the outer portions of the wing.

On October 4, 2010, we issued AD 2010–21–18, Amendment 39–16478 (75 FR 64111, October 19, 2010), which applies to Cessna Models 336, 337, 337A (USAF 02B), 337B, M337B (USAF 02A), T337B, 337C, T337C, 337D, T337D, 337E, T337E, 337F, T337F, 337G, T337G, 337H, P337H, T337H, T337H–SP, F337E, FT337E, F337F, FT337F, F337G, FT337GP, F337H, and FT337HP airplanes that are now or have ever been modified by Aviation Enterprises wing tip auxiliary fuel tank extensions Supplemental Type Certificates (STC) SA02055AT, SA02056AT, SA02307AT, or SA02308AT.

In January 2011, Flint Aero, Inc. confirmed the under-strength condition of the outer wing section.

This condition, if not corrected, could result in structural failure of the wing, which could result in loss of control.

Relevant Service Information

We reviewed Flint Aero, Inc. Service Bulletin FA2, Rev 2, dated April 8, 2011, and Flint Aero, Inc. Drawing FA2, Rev A, dated April 8, 2011. The service information describes procedures for the reinforcement of the upper wing skin, the wing front spar cap, and the stringers.

FAA's Determination

We are proposing this AD because we evaluated all the relevant information and determined the unsafe condition described previously is likely to exist or develop in other products of the same type design.

Proposed AD Requirements

This proposed AD would require inspecting the wings for internal and external damage, repairing any damage, reinforcing the wings, installing operational limitation placards in the cockpit, and adding limitations to the Flint Aero, Inc. Airplane Flight Manual Supplement.

Costs of Compliance

We estimate that this AD affects 33 airplanes of U.S. registry.

We estimate the following costs to comply with this AD:

ESTIMATED COSTS

Action	Labor cost	Parts cost	Cost per product	Cost on U.S. operators
Inspection of the wing for damage	5 work-hours × $85 per hour = $425 per inspection cycle.	Not applicable	$425 per inspection cycle.	$14,025 per inspection cycle.
Fabricating and installing placards in the cockpit.	1 work-hour × $85 per hour = $85	Not applicable	$85	$2,805.
Modifying the Limitations section of the Flint Aero, Inc. Airplane Flight Manual Supplement.	.5 work-hour × $85 per hour = $42.50.	Not applicable	$42.50	$1,402.50.
Reinforcing the upper wing skin, stringer, and wing front spar cap.	25 work-hours × $85 per hour = $2,125.	$1,070	$3,195	$105,435.

Authority for This Rulemaking

Title 49 of the United States Code specifies the FAA's authority to issue rules on aviation safety. Subtitle I, section 106, describes the authority of the FAA Administrator. Subtitle VII: Aviation Programs, describes in more detail the scope of the Agency's authority.

We are issuing this rulemaking under the authority described in subtitle VII, part A, subpart III, section 44701: "General requirements." Under that section, Congress charges the FAA with promoting safe flight of civil aircraft in air commerce by prescribing regulations for practices, methods, and procedures the Administrator finds necessary for safety in air commerce. This regulation is within the scope of that authority because it addresses an unsafe condition that is likely to exist or develop on products identified in this rulemaking action.

Regulatory Findings

We determined that this proposed AD would not have federalism implications under Executive Order 13132. This proposed AD would not have a substantial direct effect on the States, on the relationship between the national Government and the States, or on the distribution of power and responsibilities among the various levels of government.

For the reasons discussed above, I certify this proposed regulation:

(1) Is not a "significant regulatory action" under Executive Order 12866,

(2) Is not a "significant rule" under the DOT Regulatory Policies and Procedures (44 FR 11034, February 26, 1979),

(3) Will not affect intrastate aviation in Alaska, and

(4) Will not have a significant economic impact, positive or negative, on a substantial number of small entities under the criteria of the Regulatory Flexibility Act.

List of Subjects in 14 CFR Part 39

Air transportation, Aircraft, Aviation safety, Incorporation by reference, Safety.

The Proposed Amendment

Accordingly, under the authority delegated to me by the Administrator, the FAA proposes to amend 14 CFR part 39 as follows:

PART 39—AIRWORTHINESS DIRECTIVES

1. The authority citation for part 39 continues to read as follows:

Authority: 49 U.S.C. 106(g), 40113, 44701.

§ 39.13 [Amended]

2. The FAA amends § 39.13 by adding the following new airworthiness directive (AD):

Cessna Aircraft Company: Docket No. FAA–2011–0450; Directorate Identifier 2011–CE–010–AD.

Comments Due Date

(a) We must receive comments by June 20, 2011.

Affected ADs

(b) AD 2010–21–18, Amendment 39–16478, is related to the subject of this AD.

Applicability

(c) This AD applies to Cessna Aircraft Company (Cessna) Models 337, 337A (USAF 02B), 337B, 337C, 337D, 337E, T337E, 337F, T337F, 337G, T337G, M337B, F 337E, FT337E, F 337F, FT337F, F 337G, and FT337GP airplanes, all serial numbers, that:

(1) Are certificated in any category; and

(2) Are or have ever been modified by Flint Aero, Inc. Supplemental Type Certificate (STC) SA5090NM.

Subject

(d) Joint Aircraft System Component (JASC)/Air Transport Association (ATA) of America Code 57; Wings.

Unsafe Condition

(e) This AD was prompted by a review of installed Flint Aero, Inc. wing tip auxiliary fuel tanks, STC SA5090NM. We are issuing this AD to detect and correct damage in the wings and to prevent overload failure of the wing due to the installation of the STC. Damage in the wing or overload failure of the wing could result in structural failure of the wing, which could result in loss of control.

Compliance

(f) Comply with this AD within the compliance times specified, unless already done.

Required Actions

(g) Within the next 50 hours time-in-service (TIS) after the effective date of this AD or within 30 days after the effective date of this AD, whichever occurs first, do a general and focused inspection of the left and right wing for internal and external damage at wing stations (WSTA) 150 and 177. Do the inspections following Appendix 1 of this AD.

(h) After the inspection required in paragraph (g) of this AD if no damage was found and before the modification required in paragraph (k) of this AD is incorporated, anytime severe and/or extreme turbulence is encountered during flight, before the next flight do a focused inspection of the wing for damage following steps 1, 2, 3, 4, 7, and 10 in Appendix 1 of this AD. Also inspect for signs of distress in the upper front spar in the area around WSTA 150 and 177. The definition of severe and extreme turbulence can be found in table 7–1–9 of the FAA Aeronautical Information Manual (AIM). You may obtain a copy of the FAA AIM at *http://www.faa.gov/air_traffic/publications/atpubs/aim/.*

(i) For airplanes that have not had the modification specified in paragraphs (j) and (k) incorporated, within the next 50 hours time-in-service (TIS) after the effective date of this AD or within 30 days after the effective date of this AD, fabricate a placard (using at least ⅛-inch letters) with the following words and install the placard on the instrument panel within the pilot's clear view:

(1) "MAINTAIN AT LEAST 12 GAL OF FUEL IN EACH WING TIP FUEL TANK FOR AIRPLANE WEIGHTS BETWEEN 3,400 LBS AND 4,330 LBS."

(2) "MAINTAIN FULL FUEL IN EACH WING TIP FUEL TANK FOR AIRPLANE WEIGHTS AT OR ABOVE 4,330 LBS."

(j) If damage or signs of distress are found during the inspections required in paragraphs (g) and (h) of this AD, before further flight do the following:

(1) Repair all damaged and distressed parts following FAA Advisory Circular (AC) 43.13–1B, Chapter 4, which can be found at *http://rgl.faa.gov/;*

(2) Incorporate the modification reinforcement specified in Flint Aero, Inc. Service Bulletin FA2, Rev 2, dated April 8, 2011, following Flint Aero, Inc. Drawing FA2, Rev A, dated April 8, 2011;

(3) Remove the placard specified in paragraph (i) of this AD;

(4) Fabricate a new placard (using at least ⅛-inch letters) with the following words and install the placard on the instrument panel within the pilot's clear view: "MAINTAIN AT LEAST 12 GAL OF FUEL IN EACH WING TIP FUEL TANK FOR AIRPLANE WEIGHTS AT OR ABOVE 4,330 LBS"; and

(5) Incorporate the information from Appendix 2 of this AD into the Limitations section of the Flint Aero, Inc. Airplane Flight Manual Supplement.

(k) If no damage or signs of distress are found during the inspections required in paragraphs (g) and (h) of this AD, within the next 100 hours TIS after the effective date of this AD or within 12 months after the effective date of this AD, whichever occurs first, do the following:

(1) Incorporate the modification reinforcement specified in Flint Aero, Inc. Service Bulletin FA2, Rev 2, dated April 8, 2011, following Flint Aero, Inc. Drawing FA2, Rev A, dated April 8, 2011;

(2) Remove the placard specified in paragraph (i) of this AD;

(3) Fabricate a new placard (using at least ⅛-inch letters) with the following words and install the placard on the instrument panel within the pilot's clear view: "MAINTAIN AT LEAST 12 GAL OF FUEL IN EACH WING TIP FUEL TANK FOR AIRPLANE WEIGHTS AT OR ABOVE 4,330 LBS"; and

(4) Incorporate the information from Appendix 2 of this AD into the Limitations section of the Flint Aero, Inc. Airplane Flight Manual Supplement.

(l) You may incorporate the modification reinforcement specified in Flint Aero, Inc. Service Bulletin FA2, Rev 2, dated April 8, 2011, following Flint Aero, Inc. Drawing FA2, Rev A, dated April 8, 2011, at any time after the inspection required in paragraph (g) of this AD but no later than the compliance time specified in paragraph (k) of this AD as long as no cracks were found. As required in paragraph (j) of this AD, the modification reinforcement must be incorporated before further flight if damage or signs of distress are found.

Alternative Methods of Compliance (AMOCs)

(m)(1) The Manager, Los Angeles Aircraft Certification Office (ACO), FAA, has the authority to approve AMOCs for this AD, if requested using the procedures found in 14 CFR 39.19. In accordance with 14 CFR 39.19, send your request to your principal inspector or local Flight Standards District Office, as appropriate. If sending information directly to the manager of the ACO, send it to the attention of the person identified in the Related Information section of this AD.

(2) Before using any approved AMOC, notify your appropriate principal inspector, or lacking a principal inspector, the manager of the local flight standards district office/certificate holding district office.

Related Information

(n) For more information about this AD, contact Dara Albouyeh, Aerospace Engineer, FAA, Los Angeles ACO, 3960 Paramount Blvd., Lakewood, CA 90712; phone: (562) 627–5222; fax: (562) 627–5210; e-mail: *dara.albouyeh@faa.gov.*

(o) For service information identified in this AD, contact Flint Aero, Inc., 1942 Joe Crosson Drive, El Cajon, CA 92020; phone: (619) 448–1551; fax: (619) 448–1571; Internet: *http://www.flintaero.com.* You may review copies of the referenced service information at the FAA, Small Airplane Directorate, 901 Locust, Kansas City, MO 64106. For information on the availability of this material at the FAA, call (816) 329–4148.

Appendix 1 to Docket No. FAA–2011–0450

General and Focused Inspection Procedures

Perform a general and focused inspection of the wing for internal and external damage from wing station (WSTA) 23 to the wing tip. The general inspection must be performed in accordance with 14 CFR 43.15(c), using a checklist that includes at least the scope and detail of the items contained in Appendix D of 14 CFR part 43. The focused inspection must include the items listed below. Remove all wing access panels to conduct the inspections. Do these inspections following the manufacturer's service information and any other appropriate guidance, such as FAA Advisory Circular (AC) 43.13–1B Acceptable Methods, Techniques, and Practices—Aircraft Inspection and Repair. AC 43.13–1B can be found at *http://rgl.faa.gov/.*

Focused inspection items to look for:

(1) Wrinkles in upper wing skins, from the outboard edge on the fuel tank access covers (WSTA 150 or 177) to the WSTA 222 (See View B, Figure 3).

(2) Wrinkles in the upper wing skins from WSTA 55 to 66, adjacent to the booms (See View E, Figure 6).

(3) Cracking of the upper wing skins. Pay particular attention to any wrinkles, the radius between stiffeners at WSTA 150 (under fuel tank covers), and unreinforced access holes (See View B, Figure 3).

(4) Working (smoking) rivets outboard of the wing tank access covers.

(5) Fasteners with less than two diameters edge distance.

(6) Fasteners with less than four diameters center to center spacing.

(7) Looseness of attachments of the tip extension to the wing and wing tip to wing extension when pushing up and down on the tip.

(8) Any signs of distress along both front and rear spars, particularly in the area around WSTA 177.

(9) Inspect under any repairs to the upper skins, particularly in the area just outboard of the fuel tank access covers as these may be covering up existing damage.

(10) Inter-rivet buckling of the stringers attached to the upper surface skin, outboard of the fuel tank access covers (See View F, Figure 7).

(11) Inspect rib at WSTA 222 for damage. Trimming of the rib may have been done to allow installation of fuel lines (See View A, Figure 2). Repair in accordance with AC 43.13–1B, Chapter 4, paragraph 4–58(g) and Figure 4–14, or by using another FAA-approved method that restores equivalent strength of the wing rib.

Appendix 1 to Docket No. FAA–2011–0450

General and Focused Inspection Procedures (Continued)

(12) Inspect and identify screws, installed in tapped (threaded) holes in metal substructure, used to attach wing tips, stall fences, fuel and electrical components, and access doors. For tapped holes, remove fastener and open up the diameter to provide a smooth bore hole, for the smallest oversize fastener, using close tolerance holes noted in AC 43.13–1B, paragraph 7–39 or other FAA-approved scheme. Maintain minimum 2 x fastener diameter edge distance and 4 x fastener diameter center to center spacing. Select and install new, equivalent strength or stronger, fasteners with nuts/collars in accordance with AC 43.13–1B, Chapter 7 and AC 43.13–2B, paragraph 108 or other FAA-approved repair. New fasteners must not have threads in bearing against the sides of the holes.

(13) Inspect wing skins for unreinforced cutouts. (See View C, Figure 4).

(14) Inspect the upper spar cap horizontal flanges for open holes (See View D, Figure 5).

Appendix 1 to Docket No. FAA–2011–0450 (Continued)

BILLING CODE 4910–13–P

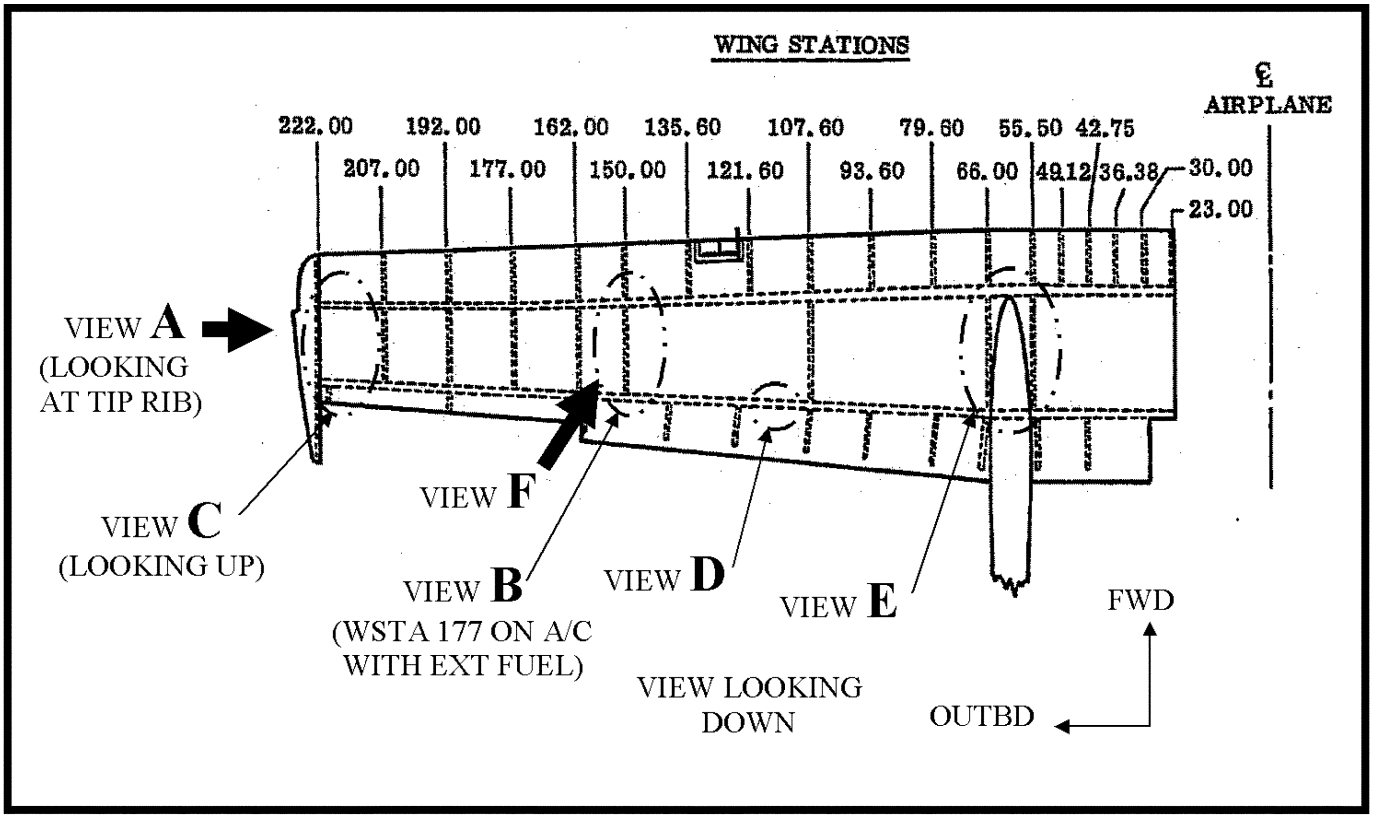

Figure 1

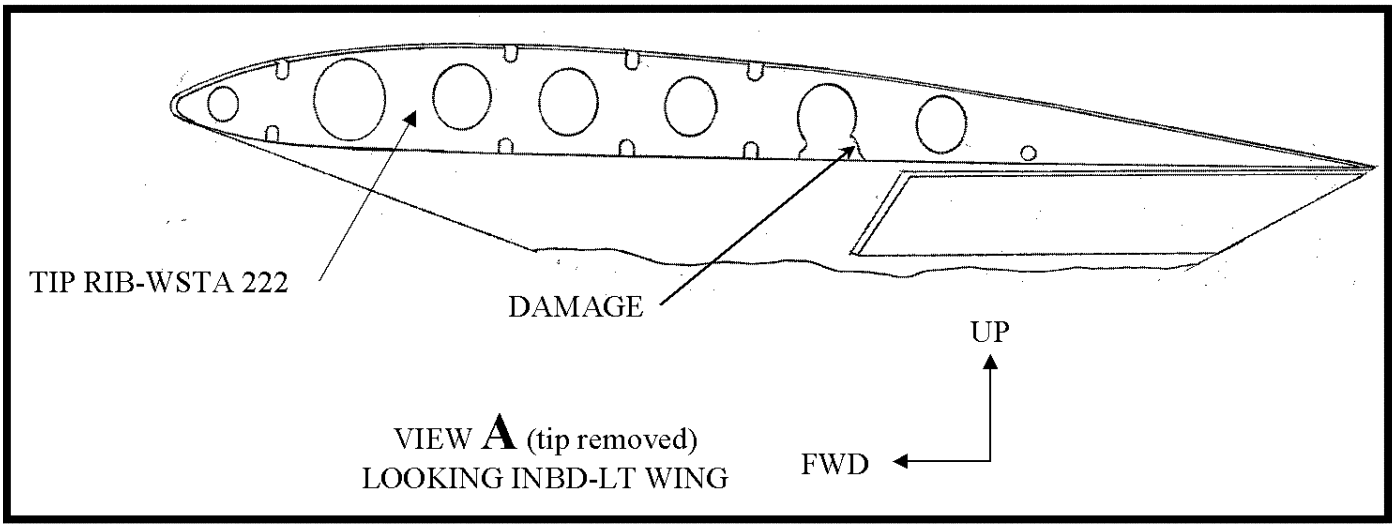

Figure 2

BILLING CODE 4910–13–C

Appendix 1 to Docket No. FAA–2011–0450 (Continued)

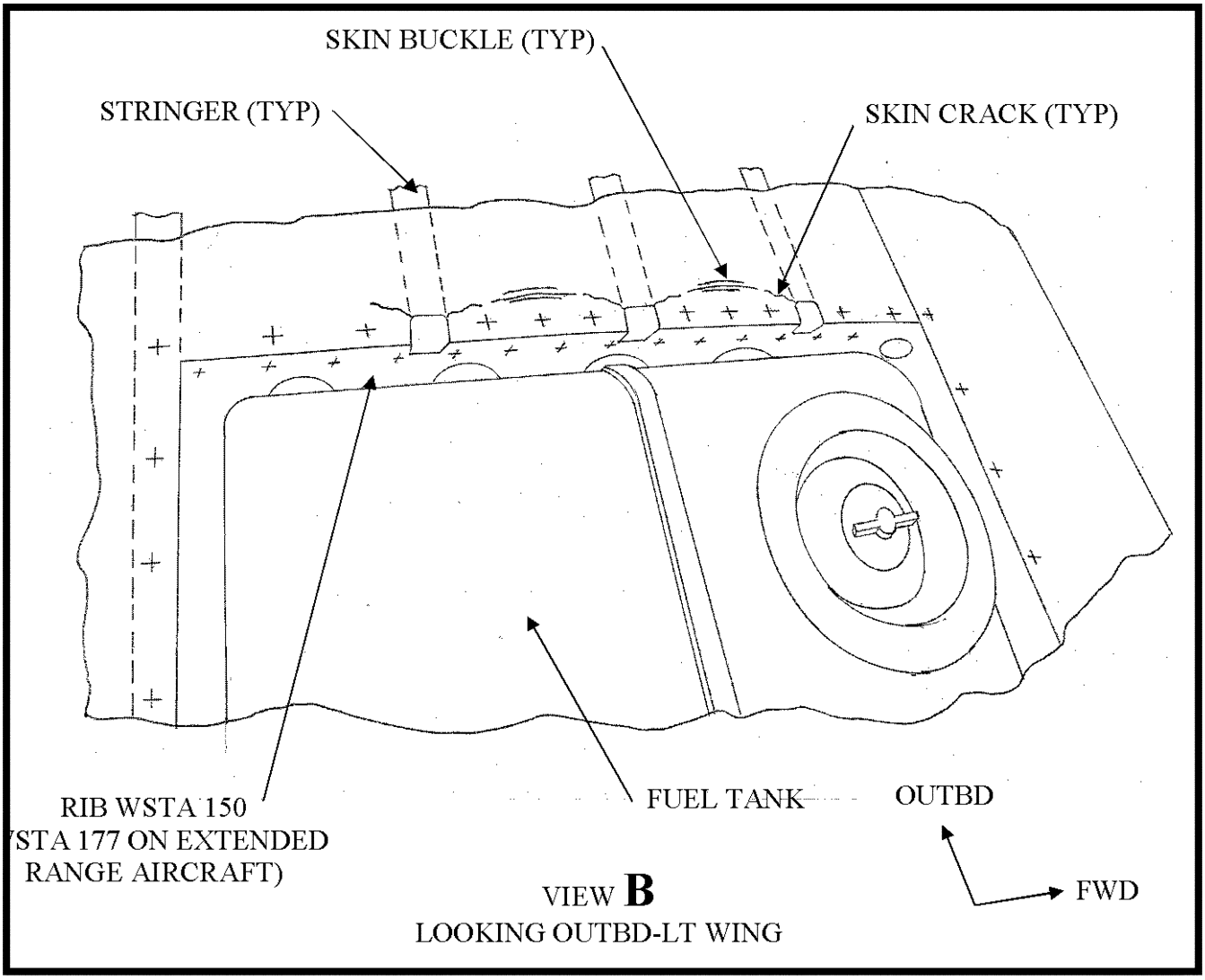

Figure 3

BILLING CODE 4910–13–C

Appendix 1 to Docket No. FAA–2011–0450 (Continued)

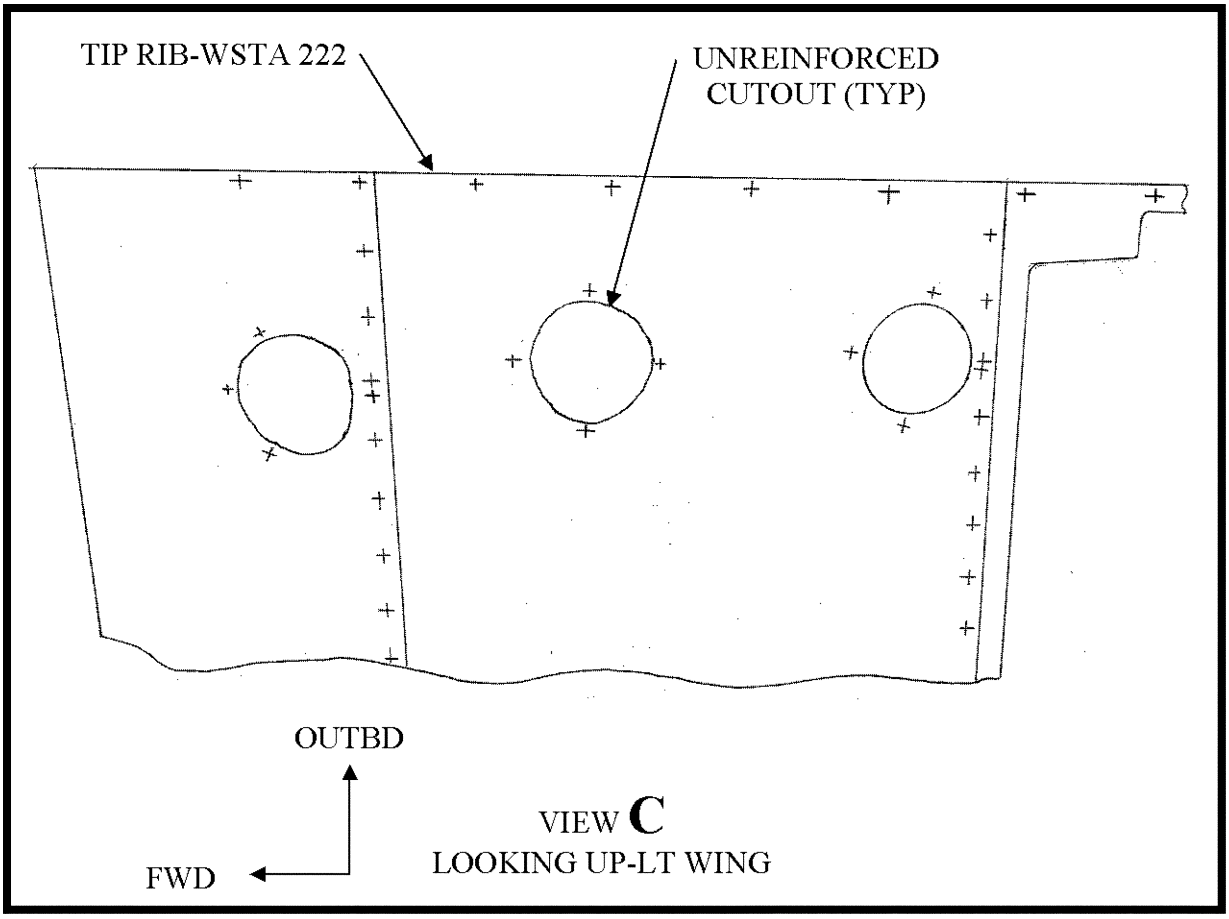

Figure 4

BILLING CODE 4910–13–C

Appendix 1 to Docket No. FAA–2011–0450
(Continued)

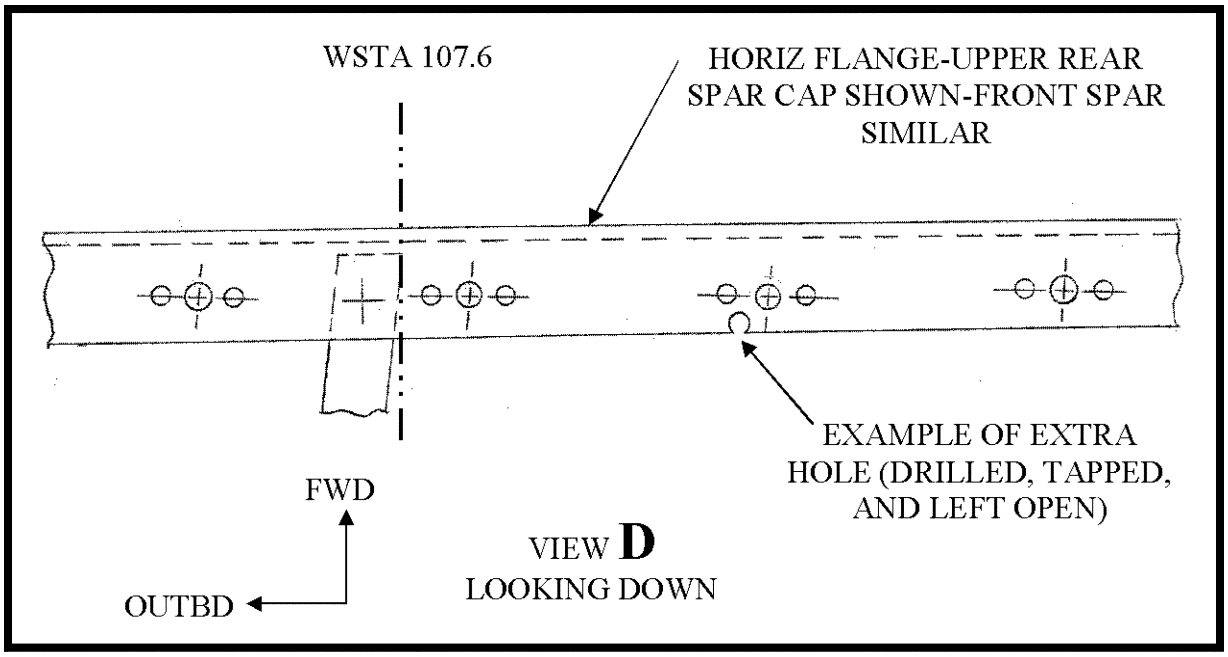

Figure 5

BILLING CODE 4910–13–C

Appendix 1 to Docket No. FAA–2011–0450 (Continued)

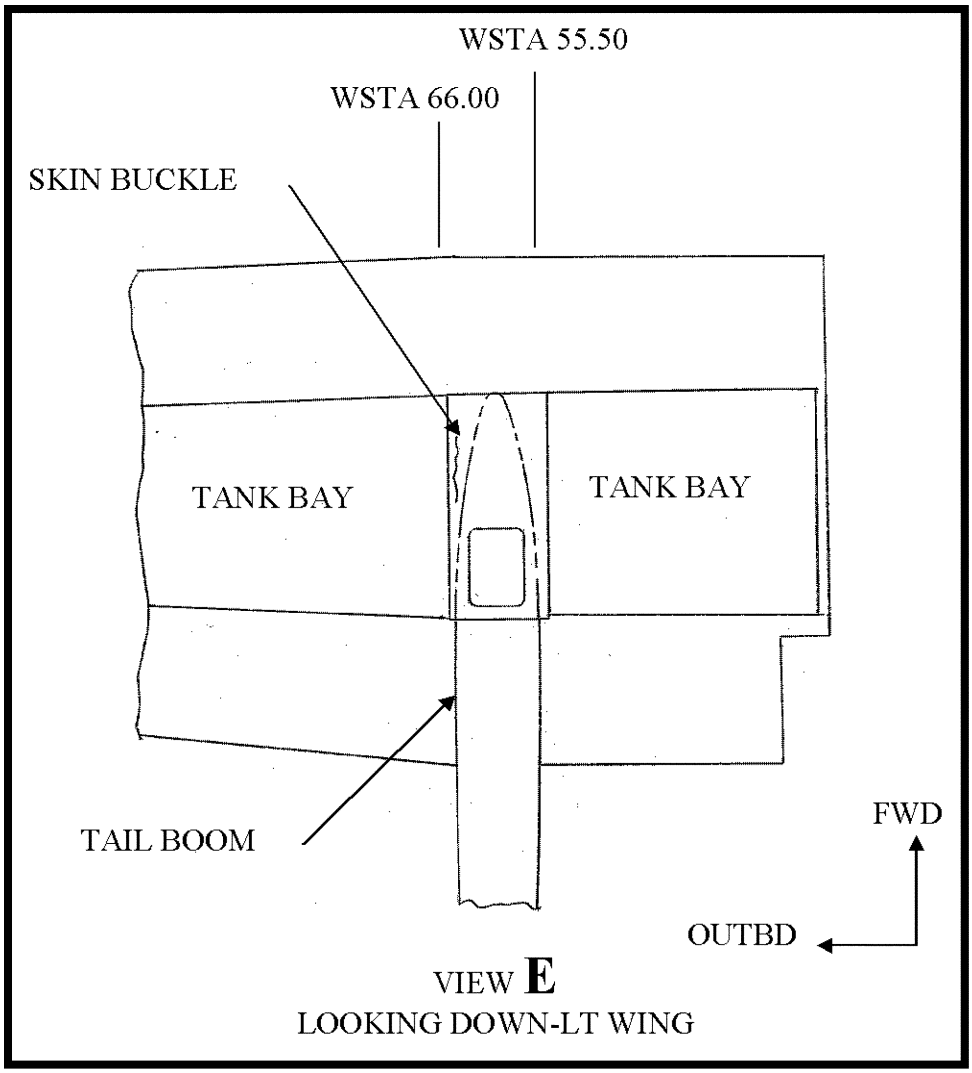

Figure 6

BILLING CODE 4910–13–C

Appendix 1 to Docket No. FAA–2011–0450 (Continued)

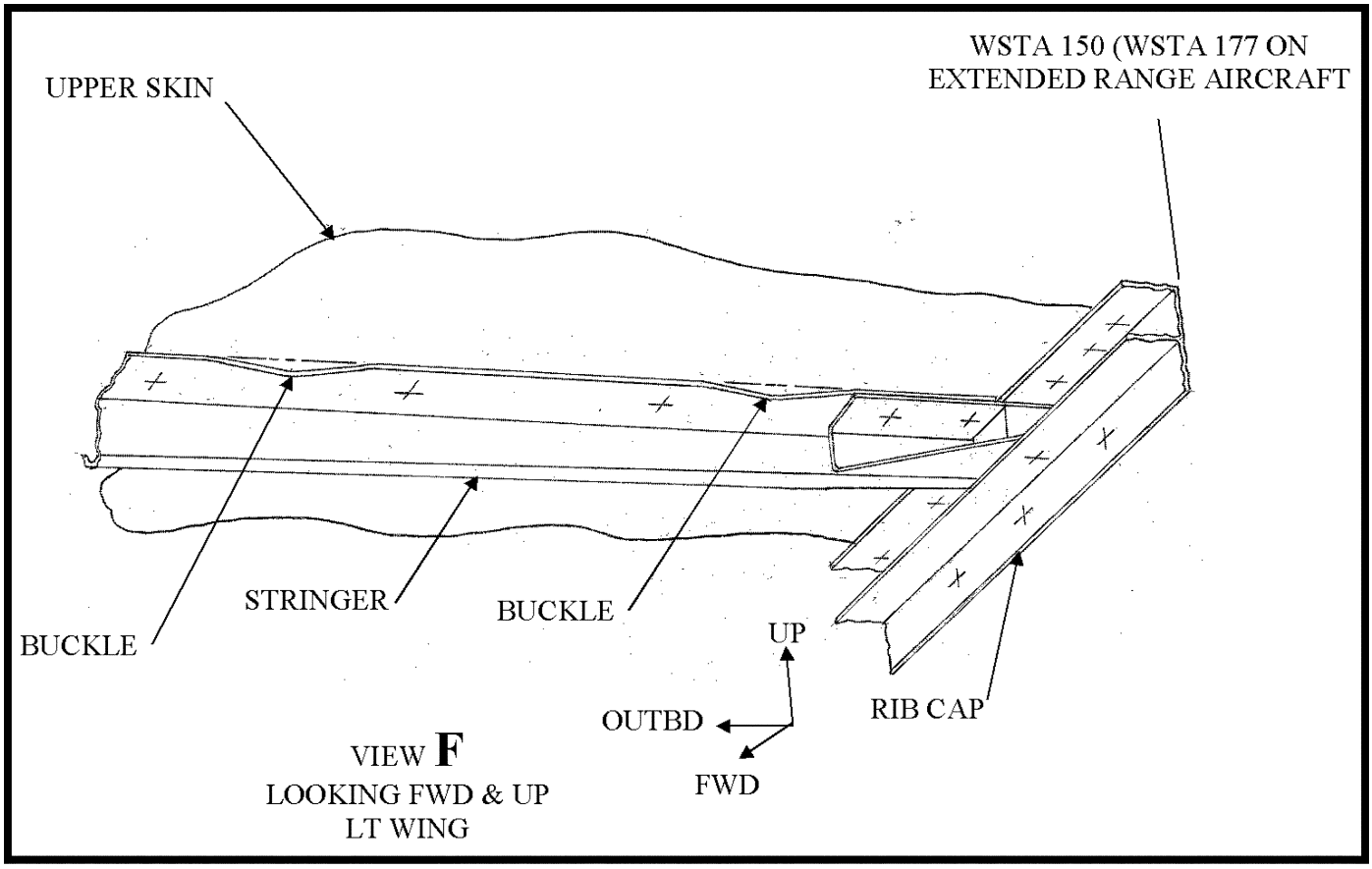

Figure 7

BILLING CODE 4910–13–C

Appendix 2 to Docket No. FAA–2011–0450

Airworthiness Limitations for the Flint Aero, Inc. Airplane Flight Manual Supplement

"MAINTAIN AT LEAST 12 GAL OF FUEL IN EACH WING TIP FUEL TANK FOR AIRPLANE WEIGHTS AT OR ABOVE 4,330 LBS."

Issued in Kansas City, Missouri, on April 27, 2011.

John Colomy,

Acting Manager, Small Airplane Directorate, Aircraft Certification Service.

[FR Doc. 2011–10818 Filed 5–3–11; 8:45 am]

BILLING CODE 4910–13–P

SECURITIES AND EXCHANGE COMMISSION

17 CFR Parts 229 and 240

[Release Nos. 33–9203; 34–64366; File No. S7–13–11]

RIN 3235–AK95

Listing Standards for Compensation Committees

AGENCY: Securities and Exchange Commission.

ACTION: Proposed rule; extension of comment period.

SUMMARY: The Securities and Exchange Commission is extending the comment period for a release proposing a new rule and rule amendments to implement the provisions of Section 952 of the Dodd-Frank Wall Street Reform and Consumer Protection Act of 2010, which added Section 10C to the Securities Exchange Act of 1934 (the "Exchange Act"). [Release No. 33–9199; 76 FR 18966 (April 6, 2011)]. The original comment period for Release 33–9199 is scheduled to end on April 29, 2011. The Commission is extending the time period in which to provide the Commission with comments on that release to May 19, 2011. This action will allow interested persons additional time to analyze the issues and prepare their comments.

DATES: Comments should be received on or before May 19, 2011.

ADDRESSES: Comments may be submitted by any of the following methods:

Electronic Comments

- Use the Commission's Internet comment form (*http://www.sec.gov/rules/proposed.shtml*);
- Send an e-mail to *rule-comments@sec.gov;* or
- Use the Federal Rulemaking ePortal (*http://www.regulations.gov*). Follow the instructions for submitting comments.

Paper Comments

- Send paper comments in triplicate to Elizabeth M. Murphy, Secretary, U.S. Securities and Exchange Commission, 100 F Street, NE., Washington, DC 20549–1090.

All submissions should refer to File Number S7–13–11. This file number should be included on the subject line if e-mail is used. To help us process and review your comments more efficiently, please use only one method. The Commission will post all comments on the Commission's Internet Web site (*http://www.sec.gov/rules/proposed.shtml*). Comments are also available for Web site viewing and printing in the Commission's Public Reference Room, 100 F Street, NE., Washington, DC 20549, on official business days between the hours of

10 a.m. and 3 p.m. All comments received will be posted without change; we do not edit personal identifying information from submissions. You should submit only information that you wish to make available publicly.

FOR FURTHER INFORMATION CONTACT: N. Sean Harrison, Special Counsel, at (202) 551–3430, in the Office of Rulemaking, Division of Corporation Finance, U.S. Securities and Exchange Commission, 100 F Street, NE., Washington, DC 20549–3628.

SUPPLEMENTARY INFORMATION: The Commission has requested comment on a release proposing a new rule and rule amendments to implement the provisions of Section 952 of the Dodd-Frank Wall Street Reform and Consumer Protection Act of 2010, which added Section 10C to the Exchange Act. Section 10C requires the Commission to adopt rules directing the national securities exchanges (the "exchanges") and national securities associations to prohibit the listing of any equity security of an issuer that is not in compliance with Section 10C's compensation committee and compensation adviser requirements. In accordance with the statute, the proposed rule would direct the exchanges to establish listing standards that, among other things, require each member of a listed issuer's compensation committee to be a member of the board of directors and to be "independent," as defined in the listing standards of the exchanges adopted in accordance with the proposed rule. In addition, Section 10C(c)(2) of the Exchange Act requires the Commission to adopt new disclosure rules concerning the use of compensation consultants and conflicts of interest. The Commission approved the proposal at an open meeting on March 30, 2011, and the release was posted on the Commission's Web site on that date. The release was published in the **Federal Register** on April 6, 2011.

The Commission originally requested that comments on the release be received by April 29, 2011. A commentator has asked that the Commission extend the period of time for public comment on the proposing release.[1] After considering the request and the issues presented by the release, the Commission believes that providing the public additional time to consider the matters addressed by the release and to submit responses to the release would benefit the Commission in its consideration of final rules. Therefore, the Commission is extending the comment period for Release No. 33–9199, "Listing Standards for Compensation Committees," to May 19, 2011.

Dated: April 29, 2011.

By the Commission.

Cathy H. Ahn,

Deputy Secretary.

[FR Doc. 2011–10868 Filed 5–3–11; 8:45 am]

BILLING CODE 8011–01–P

[1] *See* letter from Center for Capital Markets Competitiveness of the U.S. Chamber of Commerce (Apr. 15, 2011). Comments are available on the Commission's Internet Web site at *http://www.sec.gov/comments/s7-13-11/s71311.shtml.*

COMMODITY FUTURES TRADING COMMISSION

17 CFR Chapter I

Reopening and Extension of Comment Periods for Rulemakings Implementing the Dodd-Frank Wall Street Reform and Consumer Protection Act

AGENCY: Commodity Futures Trading Commission.

ACTION: Reopening and extension of comment periods.

SUMMARY: Since the enactment of the Wall Street Reform and Consumer Protection Act (the "Dodd-Frank Act") on July 21, 2010, the Commodity Futures Trading Commission ("Commission") has published in the **Federal Register** a significant number of notices of proposed rulemaking to implement the provisions of the Dodd-Frank Act that establish a comprehensive new framework for the regulation of swaps. In order to provide interested parties with an additional opportunity to participate in these Dodd-Frank Act rulemakings and comment on the proposed new regulatory framework, the Commission is reopening or extending the comment period for many of its proposed rulemakings. The Commission is also requesting comment on the order in which it should consider final rulemakings made under the Dodd-Frank Act.

DATES: For those rulemakings listed herein for which the comment period has closed at the time of publication of this notice, the comment period is re-opened until June 3, 2011. For those rulemakings listed herein for which the comment period closes during the extension's comment period, the comment period is extended until June 3, 2011. The comment period of any rulemaking subject of this extension that closes after the extension's comment period shall remain open until the originally published closing date. All comments that were received after the close of the originally established comment period of each of the reopened rulemakings will be treated as if they were received during the reopened comment periods and need not be resubmitted.

The comment period regarding the order in which the Commission should consider final rules will be open until June 3, 2011.

ADDRESSES: Comments may be submitted by any of the following methods:

- Agency Web site, via its Comments Online process at *http://comments.cftc.gov.* Follow the instructions for submitting comments through the Web site, and submit all comments through the "submit comment" link associated with this extension.
- *Mail:* Send to David A. Stawick, Secretary, Commodity Futures Trading Commission, Three Lafayette Centre, 1155 21st Street, NW., Washington, DC 20581.
- *Hand Delivery/Courier:* Same as mail above.

Please submit your comments using only one method. You may submit comments on individual rulemakings subject of this extension, on the intersection of more than one rulemaking, or on the proposed rulemakings from a global perspective. Comments may be submitted on any individual rulemaking, on any combination of rulemakings, or on the order and timing of the Commission's final rulemakings, including the effective and compliance dates that may be appropriate for the various rulemakings.

To ensure that your comments are considered to the fullest extent possible by the Commission, you should identify each of the proposed rulemakings to which your comment applies by providing the name and RIN number associated with each rulemaking. Rulemaking RIN numbers may be found on the Commission's Web site at *http://comments.cftc.gov/PublicComments/ReleasesWithComments.aspx.* Comments that address the rulemakings from a global perspective should be identified with the phrase "global comment" in the subject line. Additionally, as provided above, all comments submitted through the Commission's Comments Online process should be transmitted via the "submit comment" link associated with this rulemaking. You need not, and to ensure that all comments addressing more than one rulemaking are

considered fully by the Commission you should not, submit comments addressing more than one rulemaking to any of the individual rulemakings listed on the Commission's "public comments" or "open comment periods" Web pages.

All comments must be submitted in English, or if not, accompanied by an English translation. Comments will be posted as received to *http://www.cftc.gov.* You should submit only information that you wish to make available publicly. If you wish the Commission to consider information that may be exempt from disclosure under the Freedom of Information Act, a petition for confidential treatment of the exempt information may be submitted according to the procedures established in § 145.9 of the Commission's regulations, 17 CFR 145.9.

The Commission reserves the right, but shall have no obligation, to review, pre-screen, filter, redact, refuse or remove any or all of your submission from *http://www.cftc.gov* that it may deem to be inappropriate for publication, such as obscene language. All submissions that have been redacted or removed that contain comments on the merits of the rulemaking will be retained in the public comment file and will be considered as required under the Administrative Procedure Act and other applicable laws, and may be accessible under the Freedom of Information Act.

FOR FURTHER INFORMATION CONTACT: On this release, Beverly E. Loew, Assistant General Counsel, Office of the General Counsel, Commodity Futures Trading Commission, 1155 21st Street, NW., Washington, DC 20581; 202–418–5648; or *bloew@cftc.gov.* On any particular rulemaking, the Commission staff members listed in the associated notice of proposed rulemaking.

SUPPLEMENTARY INFORMATION:

I. Background

President Obama signed the Dodd-Frank Act on July 21, 2010.[1] Title VII of the Dodd-Frank Act[2] amended the Commodity Exchange Act ("CEA")[3] to establish a comprehensive new regulatory framework for swaps and security-based swaps. The legislation was enacted to reduce risk, increase transparency, and promote market integrity within the financial system by, among other things: (1) Providing for the registration and comprehensive regulation of swap dealers and major swap participants; (2) imposing clearing and trade execution requirements on standardized derivative products; (3) creating robust recordkeeping and real-time reporting regimes; and (4) enhancing the Commission's rulemaking and enforcement authorities with respect to, among others, all registered entities and intermediaries subject to the Commission's oversight.

Over the past several months the Commission has proposed a number of rulemakings to implement the Dodd-Frank Act. With respect to these rulemakings, the Commission has consulted and coordinated with the Securities and Exchange Commission and other Federal regulators, held hundreds of meetings with market participants and other members of the public interested in the proposed rulemakings, and received thousands of comments on these proposed rulemakings. At this point, the regulatory requirements that have been proposed by the Commission present a substantially complete mosaic of the Commission's proposed regulatory framework for swaps under the Dodd-Frank Act.

II. Reopening and Extension of Comment Periods and Request for Comment

In light of this substantially complete mosaic, the Commission is reopening or extending the comment period of many of its proposed rulemakings in order to provide the public with an additional opportunity to comment on the proposed new regulatory framework for swaps, either in part or as a whole.

The Commission also specifically seeks comments on the costs and benefits of the proposed rulemakings, individually, in combination, or globally. In particular, the Commission reiterates its request for additional quantitative or qualitative information relating to the costs and benefits of the proposed rules.

The comment periods for the following rulemakings are being extended:

Proposed	Title of rulemaking	Closed
10/14/2010	Financial Resources Requirements for Derivatives Clearing Organizations	12/13/2010
10/18/2010	Requirements for Derivatives Clearing Organizations, Designated Contract Markets, and Swap Execution Facilities Regarding the Mitigation of Conflicts of Interest.	11/17/2010
10/26/2010	Agricultural Commodity Definition	11/26/2010
11/2/2010	Process for Review of Swaps for Mandatory Clearing	1/3/2011
11/3/2010	Investment of Customer Funds and Funds Held in an Account for Foreign Futures and Foreign Options Transactions.	12/3/2010
11/17/2010	Implementation of Conflicts of Interest Policies and Procedures by Futures Commission Merchants and Introducing Brokers.	1/18/2011
11/19/2010	Registration of Foreign Boards of Trade	1/18/2011
11/19/2010	Designation of a Chief Compliance Officer; Required Compliance Policies; and Annual Report of a Futures Commission Merchant, Swap Dealer, or Major Swap Participant.	1/18/2011
11/23/2010	Regulations Establishing and Governing the Duties of Swap Dealers and Major Swap Participants	1/24/2011
11/23/2010	Implementation of Conflicts of Interest Policies and Procedures by Swap Dealers and Major Swap Participants.	1/24/2011
11/23/2010	Registration of Swap Dealers and Major Swap Participants	1/24/2011
12/3/2010	Protection of Collateral of Counterparties to Uncleared Swaps; Treatment of Securities in a Portfolio Margining Account in a Commodity Broker Bankruptcy.	2/1/2011
12/7/2010	Real-Time Public Reporting of Swap Transaction Data	2/7/2011
12/8/2010	Swap Data Recordkeeping and Reporting Requirements	2/7/2011
12/9/2010	Reporting, Recordkeeping, and Daily Trading Records Requirements for Swap Dealers and Major Swap Participants.	2/7/2011
12/13/2010	General Regulations and Derivatives Clearing Organizations	2/11/2011
12/15/2010	Information Management Requirements for Derivatives Clearing Organizations	2/14/2011

[1] *See* Dodd-Frank Wall Street Reform and Consumer Protection Act, Public Law 111–203, 124 Stat. 1376 (2010). The text of the Dodd-Frank Act may be accessed at *http://www.cftc.gov./LawRegulation/OTCDERIVATIVES/index.htm.*

[2] Pursuant to section 701 of the Dodd-Frank Act, title VII may be cited as the "Wall Street Transparency and Accountability Act of 2010."

[3] 7 U.S.C. 1 *et seq.*

Proposed	Title of rulemaking	Closed
12/21/2010	17 CFR Part 1 Securities and Exchange Commission 17 CFR Part 240 Further Definition of "Swap Dealer," "Security-Based Swap Dealer," "Major Swap Participant," "Major Security-Based Swap Participant" and "Eligible Contract Participant".	2/22/2011
12/22/2010	Business Conduct Standards for Swap Dealers and Major Swap Participants With Counterparties	2/22/2011
12/22/2010	Core Principles and Other Requirements for Designated Contract Markets	4/18/2011
12/23/2010	Swap Data Repositories	2/22/2011
12/23/2010	End-User Exception to Mandatory Clearing of Swaps	2/22/2011
12/28/2010	Confirmation, Portfolio Reconciliation, and Portfolio Compression Requirements for Swap Dealers and Major Swap Participants.	2/28/2011
1/6/2011	Governance Requirements for Derivatives Clearing Organizations, Designated Contract Markets, and Swap Execution Facilities; Additional Requirements Regarding the Mitigation of Conflicts of Interest.	3/7/2011
1/7/2011	Core Principles and Other Requirements for Swap Execution Facilities	3/8/2011
1/20/2011	Risk Management Requirements for Derivatives Clearing Organizations	4/25/2011
2/3/2011	Commodity Options and Agricultural Swaps	4/4/2011
2/8/2011	Swap Trading Relationship Documentation Requirements for Swap Dealers and Major Swap Participants	4/11/2011
2/8/2011	Orderly Liquidation Termination Provision in Swap Trading Relationship Documentation for Swap Dealers and Major Swap Participants.	4/11/2011
3/3/2011	Amendments to Commodity Pool Operator and Commodity Trading Advisor Regulations Resulting From the Dodd-Frank Act.	5/2/2011
3/9/2011	Registration of Intermediaries	5/9/2011
3/10/2011	Requirements for Processing, Clearing, and Transfer of Customer Positions	4/11/2011

Notwithstanding the foregoing, commenters may submit, and the Commission will consider, comments on any aspects of the rulemakings, including comments on individual rulemakings subject of this extension, on the intersection of any combination of these rulemakings, or on the proposed rulemakings from a global perspective. All comments that were received after the close of the originally established comment period of each of the reopened rulemakings will be treated as if they were received during the reopened comment periods and need not be resubmitted.

Finally, the Commission is requesting comment on the order in which it should consider the Dodd-Frank final rulemakings.

Issued in Washington, DC, this 27th day of April 2010, by the Commission.

David A. Stawick,

Secretary of the Commission.

Appendices to Reopening and Extension of Comment Periods for Rulemakings Implementing the Dodd-Frank Wall Street Reform and Consumer Protection Act—Commission Voting Summary and Statements of Commissioners

Note: The following appendices will not appear in the Code of Federal Regulations.

Appendix 1—Commission Voting Summary

On this matter, Chairman Gensler and Commissioners Dunn, Chilton and O'Malia voted in the affirmative; Commissioner Sommers voted in the negative.

Appendix 2—Statement of Commissioner Scott D. O'Malia

I concur with the Commission's proposal to re-open the comment period for certain proposed rulemakings made under the Dodd-Frank Act and to request comment on the sequencing of the Commission's consideration of final rules. Following careful consideration of comments regarding the sequencing, the Commission should publish in the **Federal Register** the order in which it intends to take up consideration of the Dodd-Frank final rules. Doing so will help ensure that our processes are fully transparent and well informed.

Similarly, I strongly urge the Commission to propose a full implementation schedule, request comment and publish an adopted schedule in the **Federal Register** so that the market and public will have the certainty they need to make budgeting, investment and hiring decisions. Commenters should urge the Commission to publish a full implementation schedule by submitting comments to this rulemaking.

In order to facilitate debate, I have proposed the following sequencing of the Commission's consideration of final rules. I strongly recommend that the public comment on this proposal or recommend an alternative.

Phase I

- Federal Energy Regulatory Commission (FERC) Memorandums of Understanding
- Whistleblower
- Fair Credit Reporting Act (FCRA) Rules
- Reliance on Credit Ratings

Swap Data Repository

- Data Recordkeeping
- Large Trader reporting
- Investment advisor reporting
- Pre-enactment & Transition swaps
- Governance of SDRs
- Process to define a clearable swap

Phase II

Swap Dealer (SD)/Major Swap Participant (MSP)

- End-User Exemption
- SD/MSP Registration
- Small Bank Exemption Rule
- Business Conduct Standards for SD/MSP
  - Internal business conduct
    - Documentation
    - Conflicts of Interest
    - Capital and Margin
  - External Business conduct
- Inter-Affiliate Transactions

Products Rules

- Agricultural Swaps
- Swaps
- Agricultural commodity definition

Phase III

- Position Limits
- Clearing
  - Designated Clearing Organization (DCO) Core Principles
  - Systemically Important Designated Clearing Organizations (SIDCOs)
  - Governance of DCO
- Execution
  - Real-time Reporting
  - Swaps Execution Facility (SEF) & Block Trade Rule
  - Designated Contract Market (DCM)
  - Foreign Board of Trade (FBOT)
  - Part 40 Rule Certification
  - Governance of SEFs & DCMs

Phase IV

- Clearing
  - Rule 1.25
  - Segregation and Bankruptcy
  - Portfolio Margining
- Anti-Manipulation
- Disruptive Trading
- Volker Rule 619
- Commodity Pool Operator (CPO)/ Commodity Trading Adviser (CTA) Registration & conduct rules

• All Conforming Rules

[FR Doc. 2011–10884 Filed 5–3–11; 8:45 am]

BILLING CODE 6351–01–P

DEPARTMENT OF LABOR

Mine Safety and Health Administration

30 CFR Parts 70, 71, 72, 75, and 90

RIN 1219–AB64

Lowering Miners' Exposure to Respirable Coal Mine Dust, Including Continuous Personal Dust Monitors

AGENCY: Mine Safety and Health Administration, Labor.

ACTION: Proposed rule; extension of comment period.

SUMMARY: In response to requests from interested parties, the Mine Safety and Health Administration (MSHA) is extending the comment period on the proposed rule addressing Lowering Miners' Exposure to Respirable Coal Mine Dust, Including Continuous Personal Dust Monitors. This extension gives commenters additional time to review and comment on the proposed rule. The proposal was published on October 19, 2010 (75 FR 64412).

DATES: All comments must be received or postmarked by midnight Eastern Daylight Saving Time on May 31, 2011.

ADDRESSES: Comments must be identified with "RIN 1219–AB64" and may be sent by any of the following methods:

(1) *Federal e-Rulemaking Portal: http://www.regulations.gov.* Follow the instructions for submitting comments.

(2) *Facsimile:* 202–693–9441. Include "RIN 1219–AB64" in the subject line of the message.

(3) *Regular Mail:* MSHA, Office of Standards, Regulations, and Variances, 1100 Wilson Boulevard, Room 2350, Arlington, Virginia 22209–3939.

(4) *Hand Delivery or Courier:* MSHA, Office of Standards, Regulations, and Variances, 1100 Wilson Boulevard, Room 2350, Arlington, Virginia. Sign in at the receptionist's desk on the 21st floor.

MSHA will post all comments without change, including any personal information provided. Access comments electronically on *http://www.regulations.gov* and on MSHA's Web site at *http://www.msha.gov/currentcomments.asp.* Review comments in person at the Office of Standards, Regulations, and Variances, 1100 Wilson Boulevard, Room 2350, Arlington, Virginia. Sign in at the receptionist's desk on the 21st floor.

MSHA maintains a list that enables subscribers to receive e-mail notification when the Agency publishes rulemaking documents in the **Federal Register.** To subscribe, go to *http://www.msha.gov/subscriptions/subscribe.aspx.*

FOR FURTHER INFORMATION CONTACT: Roslyn B. Fontaine, Acting Director, Office of Standards, Regulations and Variances, MSHA, at *Fontaine.Roslyn@dol.gov* (E-mail), (202) 693–9440 (Voice), or (202) 693–9441 (Fax).

SUPPLEMENTARY INFORMATION:

Extension of Comment Period

On October 19, 2010 (75 FR 64412), MSHA published a proposed rule, Lowering Miners' Exposure to Respirable Coal Mine Dust, Including Continuous Personal Dust Monitors. In response to requests from interested parties, MSHA is extending the comment period from May 2, 2011 to May 31, 2011. All comments and supporting documentation must be received or postmarked by May 31, 2011.

Dated: April 28, 2011.

Joseph A. Main,

Assistant Secretary of Labor for Mine Safety and Health.

[FR Doc. 2011–10780 Filed 4–29–11; 4:15 pm]

BILLING CODE 4510–43–P

DEPARTMENT OF LABOR

Mine Safety and Health Administration

30 CFR Parts 75 and 104

RIN 1219–AB75, 1219–AB73

Examinations of Work Areas in Underground Coal Mines and Pattern of Violations

AGENCY: Mine Safety and Health Administration, Labor.

ACTION: Proposed rule; notice of public hearings; notice of re-opening and close of comment period.

SUMMARY: The Mine Safety and Health Administration (MSHA) will hold four public hearings on the Agency's proposed rules for Examinations of Work Areas in Underground Coal Mines (Examinations of Work Areas) and for Pattern of Violations. Each hearing will cover the major issues raised by commenters in response to the respective proposed rules.

DATES: Hearings will be held on June 2, 7, 9, and 15, 2011, at the locations listed in the **SUPPLEMENTARY INFORMATION** section of this document.

Post-hearing comments must be received or postmarked by midnight Eastern Daylight Saving Time on June 30, 2011.

ADDRESSES: Comments, requests to speak, and informational materials for the rulemaking record may be sent to MSHA by any of the following methods. Clearly identify all submissions with "RIN 1219–AB75" for Examinations of Work Areas in Underground Coal Mines' submissions, and with "RIN 1219–AB73" for Pattern of Violations' submissions.

• *Federal E-Rulemaking Portal: http://www.regulations.gov.* Follow the on-line instructions for submitting comments.

• *Facsimile:* 202–693–9441.

• *Mail or Hand Delivery:* MSHA, Office of Standards, Regulations, and Variances, 1100 Wilson Blvd., Room 2350, Arlington, VA 22209–3939. For hand delivery, sign in at the receptionist's desk on the 21st floor.

FOR FURTHER INFORMATION CONTACT: Roslyn B. Fontaine, Acting Director, Office of Standards, Regulations, and Variances, MSHA, at *fontaine.roslyn@dol.gov* (e-mail); 202–693–9440 (voice); or 202–693–9441 (facsimile).

SUPPLEMENTARY INFORMATION:

I. Availability of Information

Federal Register *Publications*: The proposed rule for Examinations of Work Areas in Underground Coal Mines, published on December 27, 2010 (75 FR 81165), and the proposed rule for Pattern of Violations, published on February 2, 2011 (76 FR 5719), are available on *http://www.regulations.gov* and on MSHA's Web site at *http://www.msha.gov/REGSPROP.HTM.*

Public Comments: MSHA posts all comments without change, including any personal information provided. Access comments electronically on *http://www.regulations.gov* and on MSHA's Web site at *http://www.msha.gov/currentcomments.asp.* Review comments in person at the Office of Standards, Regulations, and Variances, 1100 Wilson Blvd., Room 2350, Arlington, VA. Sign in at the receptionist's desk on the 21st floor.

E-mail Notification: To subscribe to receive e-mail notification when MSHA publishes rulemaking documents in the **Federal Register,** go to *http://www.msha.gov/subscriptions/subscribe.aspx.*

II. Public Hearings

MSHA will hold four public hearings on its proposed rules for Examinations of Work Areas in Underground Coal

Mines and for Pattern of Violations. Requests to speak at a hearing should be made prior to the hearing date. You do not have to make a written request to speak; however, persons and organizations wishing to speak are encouraged to notify MSHA in advance for scheduling purposes. MSHA requests that parties making presentations at the hearings submit their presentations to MSHA, including any documentation, no later than 5 days prior to the hearing.

The public hearings for the Examinations of Work Areas proposal will begin at 8:30 a.m. on each date.

The public hearings for the Pattern of Violations proposal will begin immediately following the conclusion of all testimony on the Examinations of Work Areas proposal.

MSHA is holding the two hearings on each of the following dates at the locations indicated:

Date	Location	Contact No.
June 2	Embassy Suites Denver, 4444 N. Havana Street, Denver, CO 80239	303–375–0400
June 7	Clay Center for the Arts and Sciences of West Virginia, Walker Theater (*use this entrance*), One Clay Square, Charleston, WV 25301.	304–561–3560
June 9	Sheraton Birmingham, 2101 Richard Arrington, Jr. Blvd. North, Birmingham, AL 35203	205–324–5000
June 15	Department of Labor, Mine Safety and Health Administration Headquarters, 1100 Wilson Boulevard, 25th Floor, Arlington, VA 22209–3939.	202–693–9440

Each hearing will begin with an opening statement from MSHA, followed by an opportunity for members of the public to make oral presentations. The hearings will be conducted in an informal manner. Formal rules of evidence will not apply. The hearing panel may ask questions of speakers. Speakers and other attendees may present information to MSHA for inclusion in the rulemaking record. MSHA also will accept written comments and other appropriate information for the record from any interested party, including those not presenting oral statements, until the close of the comment period on June 30, 2011.

MSHA will have a verbatim transcript of the proceedings taken for each hearing. Copies of the transcripts will be available to the public on *http://www.regulations.gov* and on MSHA's Web site at *http://www.msha.gov/tscripts.htm.*

III. Pattern of Violations: Clarification

Section 104.2(a) of the Pattern of Violations (POV) proposed rule would provide that the specific criteria used in the review to identify mines with a pattern of significant and substantial violations would be posted on MSHA's Web site. In the preamble, MSHA requested specific comments on how the Agency should obtain comment during the development of, and periodic revision to, the POV screening criteria. At this point in the rulemaking, MSHA plans to provide any change to the specific criteria to the public, via posting on the Agency's Web site, for comment before MSHA uses it to review a mine for a POV. MSHA plans to review and respond to comments, and revise, as appropriate, the specific criteria, and post it on the Agency's Web site. MSHA requests comments on this proposed approach to obtaining public input into revisions to the specific POV criteria.

Under § 104.2(a)(8) of the POV proposal, MSHA stated in the preamble that an operator may submit a written safety and health management program to the district manager for approval so that MSHA can determine whether the program's parameters would result in meaningful, measurable, and significant reductions in significant and substantial violations. MSHA would like to clarify that the Agency did not intend that these safety and health management programs be the same as those referenced in the Agency's rulemaking on comprehensive safety and health management programs (RIN 1219–AB71). Rather, a safety and health management program that would be considered by MSHA as a mitigating circumstance in the POV proposal would be one that: (1) Includes measurable benchmarks for abating specific violations that could lead to a POV at a specific mine; and (2) addresses hazardous conditions at that mine.

IV. Request for Comments

MSHA solicits comments from the mining community on all aspects of the proposed rules and is particularly interested in comments that address alternatives to key provisions in the proposals. Commenters are requested to be specific in their comments and submit detailed rationale and supporting documentation for any comment or suggested alternative.

Dated: April 28, 2011.

Joseph A. Main,

Assistant Secretary of Labor for Mine Safety and Health.

[FR Doc. 2011–10788 Filed 4–29–11; 4:15 pm]

BILLING CODE 4510–43–P

DEPARTMENT OF HOMELAND SECURITY

Coast Guard

33 CFR Part 165

[Docket No. USCG–2011–0279]

RIN 1625–AA00

Safety Zone; TriMet Bridge Project, Willamette River; Portland, OR

AGENCY: Coast Guard, DHS.

ACTION: Notice of proposed rulemaking.

SUMMARY: The U.S. Coast Guard is proposing the establishment of a safety zone during the construction of the TriMet Bridge on the Willamette River, in Portland, OR. This action is necessary to ensure the safety of recreational vessels and commercial vessels transiting in close proximity to cranes and overhead work associated with this construction project. During the enforcement period, all vessels will be required to transit through the area at a no wake speed and at a safe distance from the work being conducted.

DATES: Comments and related material must be received by the Coast Guard on or before June 20, 2011.

ADDRESSES: You may submit comments identified by docket number USCG–2011–0279 using any one of the following methods:

(1) *Federal eRulemaking Portal: http://www.regulations.gov.*

(2) *Fax:* 202–493–2251.

(3) *Mail:* Docket Management Facility (M–30), U.S. Department of Transportation, West Building Ground Floor, Room W12–140, 1200 New Jersey Avenue, SE., Washington, DC 20590–0001.

(4) *Hand delivery:* Same as mail address above, between 9 a.m. and 5 p.m., Monday through Friday, except Federal holidays. The telephone number is 202–366–9329.

To avoid duplication, please use only one of these four methods. See the "Public Participation and Request for Comments" portion of the **SUPPLEMENTARY INFORMATION** section below for instructions on submitting comments.

FOR FURTHER INFORMATION CONTACT: If you have questions on this proposed rule, call or e-mail MST1 Jaime Sayers, Waterways Management Division, Marine Safety Unit Portland, Coast Guard; telephone 503–240–9319, e-mail *Jaime.a.Sayers@uscg.mil.* If you have questions on viewing or submitting material to the docket, call Renee V. Wright, Program Manager, Docket Operations, telephone 202–366–9826.

SUPPLEMENTARY INFORMATION:

Public Participation and Request for Comments

We encourage you to participate in this rulemaking by submitting comments and related materials. All comments received will be posted without change to *http://www.regulations.gov* and will include any personal information you have provided.

Submitting Comments

If you submit a comment, please include the docket number for this rulemaking (USCG–2011–0279), indicate the specific section of this document to which each comment applies, and provide a reason for each suggestion or recommendation. You may submit your comments and material online (via *http://www.regulations.gov*) or by fax, mail, or hand delivery, but please use only one of these means. If you submit a comment online via *http://www.regulations.gov,* it will be considered received by the Coast Guard when you successfully transmit the comment. If you fax, hand deliver, or mail your comment, it will be considered as having been received by the Coast Guard when it is received at the Docket Management Facility. We recommend that you include your name and a mailing address, an e-mail address, or a telephone number in the body of your document so that we can contact you if we have questions regarding your submission.

To submit your comment online, go to *http://www.regulations.gov,* click on the "submit a comment" box, which will then become highlighted in blue. In the "Document Type" drop down menu select "Proposed Rule" and insert "USCG–2011–0279" in the "Keyword" box. Click "Search" then click on the balloon shape in the "Actions" column. If you submit your comments by mail or hand delivery, submit them in an unbound format, no larger than 8½ by 11 inches, suitable for copying and electronic filing. If you submit comments by mail and would like to know that they reached the Facility, please enclose a stamped, self-addressed postcard or envelope. We will consider all comments and material received during the comment period and may change the rule based on your comments.

Viewing Comments and Documents

To view comments, as well as documents mentioned in this preamble as being available in the docket, go to *http://www.regulations.gov,* click on the "read comments" box, which will then become highlighted in blue. In the "Keyword" box insert "USCG–2011–0279" and click "Search." Click the "Open Docket Folder" in the "Actions" column. You may also visit the Docket Management Facility in Room W12–140 on the ground floor of the Department of Transportation West Building, 1200 New Jersey Avenue, SE., Washington, DC 20590, between 9 a.m. and 5 p.m., Monday through Friday, except Federal holidays. We have an agreement with the Department of Transportation to use the Docket Management Facility.

Privacy Act

Anyone can search the electronic form of comments received into any of our dockets by the name of the individual submitting the comment (or signing the comment, if submitted on behalf of an association, business, labor union, etc.). You may review a Privacy Act notice regarding our public dockets in the January 17, 2008, issue of the **Federal Register** (73 FR 3316).

Public Meeting

We do not now plan to hold a public meeting. But you may submit a request for one on or before May 1, 2011 using one of the four methods specified under **ADDRESSES**. Please explain why you believe a public meeting would be beneficial. If we determine that one would aid this rulemaking, we will hold one at a time and place announced by a later notice in the **Federal Register**.

Basis and Purpose

TriMet and their contractor, Kiewit Infrastructure West, will be starting construction of the new Portland-Milwaukie Light Rail Bridge on July 1, 2011 (with in-water mobilization beginning in June). The construction of the bridge will last from July 2011 through October 2014. The project includes the construction of four piers, two on land and two piers in the water requiring cofferdams. Trestles will be constructed to complete sections of the project as well as the use of crane barges that can be affected by vessel wakes. To ensure the safety of construction crews on the barges, trestles, and cranes involved in this project TriMet has requested that the Coast Guard place a 1000 foot safety zone around the entire project. This safety zone will include a 500 foot no wake zone upriver and downriver of the project. It will also include two exclusionary zones that will require vessels passing through the area to remain a distance of 100 feet in all directions away from the work trestles and 140 feet in all directions away from the cranes. This will ensure that the vessels passing through the designated areas will not be in a dangerous position under cranes or too close to the trestles.

Discussion of Proposed Rule

The safety zone created by this rule will cover all waters of the Willamette River encompassed within the following two lines: Line one starting at latitude 45°30′26.21″ N longitude 122°39′57.53″ W on the east bank then across the Willamette River to latitude 45°30′20.77″ N longitude 122°40′13.04″ W on the west bank; line two starting at latitude 45°30′18.14″ N longitude 122°39′51.77″ W on the east bank then across the Willamette River to latitude 45°30′12.02″ N longitude 122°40′08.44″ W on the west bank.

Geographically this area is all the waters of the Willamette River within an area created by a line beginning on the east bank of the Willamette River at the OMSI facility extending across the river to the west bank, following the shoreline approximately 1000 feet up river to the Zidell waterfront area, extending across the river to the property line for Caruthers Landing, then following the shoreline approximately 1000 feet downriver to the starting point.

Regulatory Analyses

We developed this proposed rule after considering numerous statutes and executive orders related to rulemaking. Below we summarize our analyses based on 13 of these statutes or executive orders.

Regulatory Planning and Review

This proposed rule is not a significant regulatory action under section 3(f) of Executive Order 12866, Regulatory Planning and Review, and does not require an assessment of potential costs and benefits under section 6(a)(3) of that Order. The Office of Management and

Budget has not reviewed it under that Order. The Coast Guard has made this determination based on the fact that this rule doesn't stop all river traffic. The rule will only limit entry into certain areas of the river for safety; the other section of the river will be open for transits at a no wake speed. Users of the river should not be adversely affected by the closures and delays.

Small Entities

Under the Regulatory Flexibility Act (5 U.S.C. 601–612), we have considered whether this proposed rule would have a significant economic impact on a substantial number of small entities. The term "small entities" comprises small businesses, not-for-profit organizations that are independently owned and operated and are not dominant in their fields, and governmental jurisdictions with populations of less than 50,000.

The Coast Guard certifies under 5 U.S.C. 605(b) that this proposed rule would not have a significant economic impact on a substantial number of small entities. This rule may affect the following entities some of which may be small entities: The owners or operators of vessels wishing to transit the safety zone established by this rule. The rule will not have a significant economic impact on a substantial number of small entities because parts of the area will still be accessible to vessels and the vessels will still be able to transit through the safety zone area with permission.

If you think that your business, organization, or governmental jurisdiction qualifies as a small entity and that this rule would have a significant economic impact on it, please submit a comment (see **ADDRESSES**) explaining why you think it qualifies and how and to what degree this rule would economically affect it.

Assistance for Small Entities

Under section 213(a) of the Small Business Regulatory Enforcement Fairness Act of 1996 (Pub. L. 104–121), we want to assist small entities in understanding this proposed rule so that they can better evaluate its effects on them and participate in the rulemaking. If the rule would affect your small business, organization, or governmental jurisdiction and you have questions concerning its provisions or options for compliance, please contact MST1 Jaime Sayers, Marine Safety unit Portland at telephone number 503–240–9319 or at *D13–SG–M–MSUPortlandWWM@uscg.mil.* The Coast Guard will not retaliate against small entities that question or complain about this proposed rule or any policy or action of the Coast Guard.

Collection of Information

This proposed rule would call for no new collection of information under the Paperwork Reduction Act of 1995 (44 U.S.C. 3501–3520.

Federalism

A rule has implications for federalism under Executive Order 13132, Federalism, if it has a substantial direct effect on State or local governments and would either preempt State law or impose a substantial direct cost of compliance on them. We have analyzed this proposed rule under that Order and have determined that it does not have implications for federalism.

Unfunded Mandates Reform Act

The Unfunded Mandates Reform Act of 1995 (2 U.S.C. 1531–1538) requires Federal agencies to assess the effects of their discretionary regulatory actions. In particular, the Act addresses actions that may result in the expenditure by a State, local, or Tribal government, in the aggregate, or by the private sector of $100,000,000 (adjusted for inflation) or more in any one year. Though this proposed rule would not result in such an expenditure, we do discuss the effects of this rule elsewhere in this preamble.

Taking of Private Property

This proposed rule would not cause a taking of private property or otherwise have taking implications under Executive Order 12630, Governmental Actions and Interference with Constitutionally Protected Property Rights.

Civil Justice Reform

This proposed rule meets applicable standards in sections 3(a) and 3(b)(2) of Executive Order 12988, Civil Justice Reform, to minimize litigation, eliminate ambiguity, and reduce burden.

Protection of Children

We have analyzed this proposed rule under Executive Order 13045, Protection of Children from Environmental Health Risks and Safety Risks. This rule is not an economically significant rule and would not create an environmental risk to health or risk to safety that might disproportionately affect children.

Indian Tribal Governments

This proposed rule does not have Tribal implications under Executive Order 13175, Consultation and Coordination with Indian Tribal Governments, because it would not have a substantial direct effect on one or more Indian Tribes, on the relationship between the Federal Government and Indian Tribes, or on the distribution of power and responsibilities between the Federal Government and Indian Tribes.

Energy Effects

We have analyzed this proposed rule under Executive Order 13211, Actions Concerning Regulations That Significantly Affect Energy Supply, Distribution, or Use. We have determined that it is not a "significant energy action" under that order because it is not a "significant regulatory action" under Executive Order 12866 and is not likely to have a significant adverse effect on the supply, distribution, or use of energy. The Administrator of the Office of Information and Regulatory Affairs has not designated it as a significant energy action. Therefore, it does not require a Statement of Energy Effects under Executive Order 13211.

Technical Standards

The National Technology Transfer and Advancement Act (NTTAA) (15 U.S.C. 272 note) directs agencies to use voluntary consensus standards in their regulatory activities unless the agency provides Congress, through the Office of Management and Budget, with an explanation of why using these standards would be inconsistent with applicable law or otherwise impractical. Voluntary consensus standards are technical standards (*e.g.,* specifications of materials, performance, design, or operation; test methods; sampling procedures; and related management systems practices) that are developed or adopted by voluntary consensus standards bodies.

This proposed rule does not use technical standards. Therefore, we did not consider the use of voluntary consensus standards.

Environment

We have analyzed this proposed rule under Department of Homeland Security Management Directive 023–01 and Commandant Instruction M16475.lD, which guide the Coast Guard in complying with the National Environmental Policy Act of 1969 (NEPA) (42 U.S.C. 4321–4370f), and have made a preliminary determination that this action is one of a category of actions that do not individually or cumulatively have a significant effect on the human environment. A preliminary environmental analysis checklist supporting this determination is available in the docket where indicated

under **ADDRESSES**. This proposed rule involves the creation and enforcement of a safety zone. We seek any comments or information that may lead to the discovery of a significant environmental impact from this proposed rule.

List of Subjects in 33 CFR Part 165

Harbors, Marine safety, Navigation (water), Reporting and recordkeeping requirements, Security measures, Waterways.

For the reasons discussed in the preamble, the Coast Guard proposes to amend 33 CFR part 165 as follows:

PART 165—REGULATED NAVIGATION AREAS AND LIMITED ACCESS AREAS

1. The authority citation for part 165 continues to read as follows:

Authority: 33 U.S.C. 1231; 46 U.S.C. Chapter 701, 3306, 3703; 50 U.S.C. 191, 195; 33 CFR 1.05–1, 6.04–1, 6.04–6, and 160.5; Pub. L. 107–295, 116 Stat. 2064; Department of Homeland Security Delegation No. 0170.1.

§ 165.1338 Safety Zone; TriMet Bridge Project, Willamette River; Portland, OR

(a) Location. The following area is a safety zone: All waters of the Willamette River encompassed within the following two lines: Line one starting at latitude 45°30′26.21″ N longitude 122°39′57.53″ W on the east bank then across the Willamette River to latitude 45°30′20.77″ N longitude 122°40′13.04″ W on the west bank; line two starting at latitude 45°30′18.14″ N longitude 122°39′51.77″ W on the east bank then across the Willamette River to latitude 45°30′12.02″ N longitude 122°40′08.44″ W on the west bank.

Geographically this area is all the waters of the Willamette River within an area created by a line beginning on the east bank of the Willamette River at the OMSI facility extending across the river to the west bank, following the shoreline approximately 1000 feet up river to the Zidell waterfront area, extending across the river to the property line for Caruthers Landing, then following the shoreline approximately 1000 feet downriver to the starting point.

(b) Regulation. In accordance with the general regulations in 33 CFR Part 165, Subpart C, no vessel operator may enter or remain in the safety zone without the permission of the Captain of the Port or Designated Representative. The Captain of the Port may be assisted by other Federal, State, or local agencies with the enforcement of the safety zone.

(c) Authorization. All vessel operators who desire to enter the safety zone must obtain permission from the Captain of the Port or Designated Representative by contacting the on-scene patrol craft. Vessel operators granted permission to enter the zone will be escorted by the on-scene patrol craft until they are outside of the safety zone.

(d) Enforcement Period. The safety zone detailed in paragraph (a) of this section will be in effect from 12:01 a.m. on July 1, 2011 through 11:59 p.m. on September 30, 2014.

Dated: April 18, 2011.

D.E. Kaup,

Captain, U.S. Coast Guard, Captain of the Port, Columbia River.

[FR Doc. 2011–10802 Filed 5–3–11; 8:45 am]

BILLING CODE 9110–04–P

ENVIRONMENTAL PROTECTION AGENCY

40 CFR Part 180

[EPA–HQ–OPP–2011–0104; FRL–8870–4]

Atrazine, Chloroneb, Chlorpyrifos, Clofencet, Endosulfan, et al.; Proposed Tolerance Actions

AGENCY: Environmental Protection Agency (EPA).

ACTION: Proposed rule.

SUMMARY: EPA is proposing to revoke certain tolerances in follow-up to canceled uses for chlorpyrifos, chloroneb, clofencet, endosulfan, ethyl parathion, methidathion, methyl parathion, and N,N-diethyl-2-(4-methylbenzyloxy)ethylamine, modify certain tolerances for atrazine, establish tolerances for endosulfan, and make minor revisions to tolerance expressions for a few of the aforementioned pesticide ingredients. Also, EPA will be removing currently expired tolerances for methidathion, and ethyl and methyl parathion.

DATES: Comments must be received on or before July 5, 2011.

ADDRESSES: Submit your comments, identified by docket identification (ID) number EPA–HQ–OPP–2011–0104, by one of the following methods:

- *Federal eRulemaking Portal: http://www.regulations.gov.* Follow the on-line instructions for submitting comments.
- *Mail:* Office of Pesticide Programs (OPP) Regulatory Public Docket (7502P), Environmental Protection Agency, 1200 Pennsylvania Ave., NW., Washington, DC 20460–0001.
- *Delivery:* OPP Regulatory Public Docket (7502P), Environmental Protection Agency, Rm. S–4400, One Potomac Yard (South Bldg.), 2777 S. Crystal Dr., Arlington, VA. Deliveries are only accepted during the Docket Facility's normal hours of operation (8:30 a.m. to 4 p.m., Monday through Friday, excluding legal holidays). Special arrangements should be made for deliveries of boxed information. The Docket Facility telephone number is (703) 305–5805.

Instructions: Direct your comments to docket ID number EPA–HQ–OPP–2011–0104. EPA's policy is that all comments received will be included in the docket without change and may be made available on-line at *http://www.regulations.gov,* including any personal information provided, unless the comment includes information claimed to be Confidential Business Information (CBI) or other information whose disclosure is restricted by statute. Do not submit information that you consider to be CBI or otherwise protected through regulations.gov or e-mail. The regulations.gov Web site is an "anonymous access" system, which means EPA will not know your identity or contact information unless you provide it in the body of your comment. If you send an e-mail comment directly to EPA without going through regulations.gov, your e-mail address will be automatically captured and included as part of the comment that is placed in the docket and made available on the Internet. If you submit an electronic comment, EPA recommends that you include your name and other contact information in the body of your comment and with any disk or CD–ROM you submit. If EPA cannot read your comment due to technical difficulties and cannot contact you for clarification, EPA may not be able to consider your comment. Electronic files should avoid the use of special characters, any form of encryption, and be free of any defects or viruses.

Docket: All documents in the docket are listed in the docket index available at *http://www.regulations.gov.* Although listed in the index, some information is not publicly available, *e.g.,* CBI or other information whose disclosure is restricted by statute. Certain other material, such as copyrighted material, is not placed on the Internet and will be publicly available only in hard copy form. Publicly available docket materials are available either in the electronic docket at *http://www.regulations.gov,* or, if only available in hard copy, at the OPP Regulatory Public Docket in Rm. S–4400, One Potomac Yard (South Bldg.), 2777 S. Crystal Dr., Arlington, VA. The hours of operation of this Docket Facility are from 8:30 a.m. to 4 p.m., Monday through Friday, excluding legal holidays. The Docket Facility telephone number is (703) 305–5805.

FOR FURTHER INFORMATION CONTACT: Joseph Nevola, Pesticide Re-evaluation Division (7508P), Office of Pesticide Programs, Environmental Protection Agency, 1200 Pennsylvania Ave., NW., Washington, DC 20460–0001; telephone number: (703) 308–8037; e-mail address: *nevola.joseph@epa.gov.*

SUPPLEMENTARY INFORMATION:

I. General Information

A. Does this action apply to me?

You may be potentially affected by this action if you are an agricultural producer, food manufacturer, or pesticide manufacturer. Potentially affected entities may include, but are not limited to:

- Crop production (NAICS code 111).
- Animal production (NAICS code 112).
- Food manufacturing (NAICS code 311).
- Pesticide manufacturing (NAICS code 32532).

This listing is not intended to be exhaustive, but rather provides a guide for readers regarding entities likely to be affected by this action. Other types of entities not listed in this unit could also be affected. The North American Industrial Classification System (NAICS) codes have been provided to assist you and others in determining whether this action might apply to certain entities. To determine whether you or your business may be affected by this action, you should carefully examine the applicability provisions in Unit II.A. If you have any questions regarding the applicability of this action to a particular entity, consult the person listed under **FOR FURTHER INFORMATION CONTACT**.

B. What should I consider as I prepare my comments for EPA?

1. *Submitting CBI.* Do not submit this information to EPA through regulations.gov or e-mail. Clearly mark the part or all of the information that you claim to be CBI. For CBI information in a disk or CD–ROM that you mail to EPA, mark the outside of the disk or CD–ROM as CBI and then identify electronically within the disk or CD–ROM the specific information that is claimed as CBI. In addition to one complete version of the comment that includes information claimed as CBI, a copy of the comment that does not contain the information claimed as CBI must be submitted for inclusion in the public docket. Information so marked will not be disclosed except in accordance with procedures set forth in 40 CFR part 2.

2. *Tips for preparing your comments.* When submitting comments, remember to:

i. Identify the document by docket ID number and other identifying information (subject heading, **Federal Register** date and page number).

ii. Follow directions. The Agency may ask you to respond to specific questions or organize comments by referencing a Code of Federal Regulations (CFR) part or section number.

iii. Explain why you agree or disagree; suggest alternatives and substitute language for your requested changes.

iv. Describe any assumptions and provide any technical information and/or data that you used.

v. If you estimate potential costs or burdens, explain how you arrived at your estimate in sufficient detail to allow for it to be reproduced.

vi. Provide specific examples to illustrate your concerns and suggest alternatives.

vii. Explain your views as clearly as possible, avoiding the use of profanity or personal threats.

viii. Make sure to submit your comments by the comment period deadline identified.

C. What can I do if I wish the agency to maintain a tolerance that the agency proposes to revoke?

This proposed rule provides a comment period of 60 days for any person to state an interest in retaining a tolerance proposed for revocation. If EPA receives a comment within the 60-day period to that effect, EPA will not proceed to revoke the tolerance immediately. However, EPA will take steps to ensure the submission of any needed supporting data and will issue an order in the **Federal Register** under FFDCA section 408(f), if needed. The order would specify data needed and the timeframes for its submission, and would require that within 90 days some person or persons notify EPA that they will submit the data. If the data are not submitted as required in the order, EPA will take appropriate action under FFDCA.

EPA issues a final rule after considering comments that are submitted in response to this proposed rule. In addition to submitting comments in response to this proposal, you may also submit an objection at the time of the final rule. If you fail to file an objection to the final rule within the time period specified, you will have waived the right to raise any issues resolved in the final rule. After the specified time, issues resolved in the final rule cannot be raised again in any subsequent proceedings.

II. Background

A. What action is the agency taking?

EPA is proposing to revoke certain tolerances, proposing some with expiration dates, for the insecticides chlorpyrifos, endosulfan, methidathion, methyl parathion, and ethyl parathion, the fungicide chloroneb, and the plant growth regulators clofencet and *N,N*-diethyl-2-(4-methylbenzyloxy)ethylamine hydrochloride. Also, EPA is proposing to modify certain tolerances for the herbicide atrazine. In addition, EPA is proposing to establish new tolerances with expiration/revocation dates for the insecticide endosulfan. Moreover, in accordance with current Agency practice to describe more clearly the measurement and scope or coverage of the tolerances, including applicable metabolites and degradates, EPA is proposing minor revisions to tolerance expressions for a number of pesticide active ingredients, including the insecticides endosulfan, methidathion, and methyl parathion, the fungicide chloroneb, and the plant growth regulator clofencet. The revisions do not substantively change the tolerance or, in any way, modify the permissible level of residues permitted by the tolerance. In addition, EPA will be removing currently expired tolerances for methidathion, methyl parathion, and ethyl parathion.

EPA is proposing these tolerance actions to follow-up on canceled uses of chloroneb, chlorpyrifos, clofencet, *N,N*-diethyl-2-(4-methylbenzyloxy)ethylamine hydrochloride, endosulfan, ethyl parathion, methidathion, and methyl parathion, and modify certain tolerances as recommended in the atrazine Reregistration Eligibility Decision (RED) of 2006. As part of the tolerance reassessment process, EPA is required to determine whether each of the amended tolerances meets the safety standard of FFDCA. The safety finding determination of "reasonable certainty of no harm" is discussed in detail in each RED and Report of the Food Quality Protection Act (FQPA) Tolerance Reassessment Progress and Risk Management Decision (TRED) for the active ingredient. REDs and TREDs recommend the implementation of certain tolerance actions, including modifications to reflect current use patterns, meet safety findings, and change commodity names and groupings in accordance with new EPA policy. Printed copies of many REDs and TREDs may be obtained from EPA's National Service Center for Environmental Publications (EPA/

NSCEP), P.O. Box 42419, Cincinnati, OH 45242–2419; telephone number: 1–800–490–9198; fax number: 1–513–489–8695; Internet at *http://www.epa.gov/ncepihom* and from the National Technical Information Service (NTIS), 5285 Port Royal Rd., Springfield, VA 22161; telephone number: 1–800–553–6847 or (703) 605–6000; Internet at *http://www.ntis.gov.* An electronic copy is available on the Internet for the atrazine interim RED in docket EPA–HQ–OPP–2003–0072 at *http://www.regulations.gov* and for the atrazine final RED at *http://www.epa.gov/pesticides/reregistration/status.htm.*

The selection of an individual tolerance level is based on crop field residue studies designed to produce the maximum residues under the existing or proposed product label. Generally, the level selected for a tolerance is a value slightly above the maximum residue found in such studies, provided that the tolerance is safe. The evaluation of whether a tolerance is safe is a separate inquiry. EPA recommends the raising of a tolerance when data show that:

1. Lawful use (sometimes through a label change) may result in a higher residue level on the commodity.

2. The tolerance remains safe, notwithstanding increased residue level allowed under the tolerance.

In REDs, Chapter IV on "Risk management, Reregistration, and Tolerance reassessment" typically describes the regulatory position, FQPA assessment, cumulative safety determination, determination of safety for U.S. general population, and safety for infants and children. In particular, the human health risk assessment document which supports the RED describes risk exposure estimates and whether the Agency has concerns. In TREDs, the Agency discusses its evaluation of the dietary risk associated with the active ingredient and whether it can determine that there is a reasonable certainty (with appropriate mitigation) that no harm to any population subgroup will result from aggregate exposure. EPA also seeks to harmonize tolerances with international standards set by the Codex Alimentarius Commission, as described in Unit III.

Explanations for proposed modifications in tolerances can be found in the RED and TRED document and in more detail in the Residue Chemistry Chapter document which supports the RED and TRED. Copies of the Residue Chemistry Chapter documents are found in the Administrative Record and an electronic copy for atrazine is available in the public docket for this proposed rule. Electronic copies are available through EPA's electronic docket and comment system, regulations.gov at *http://www.regulations.gov.* You may search for this proposed rule under docket ID number EPA–HQ–OPP–2011–0104, then click on that docket ID number to view its contents.

EPA has determined that the aggregate exposures and risks are not of concern for the above mentioned pesticide active ingredients based upon the data identified in the RED or TRED which lists the submitted studies that the Agency found acceptable.

EPA has found that the tolerances that are proposed in this document to be modified, are safe; *i.e.,* that there is a reasonable certainty that no harm will result to infants and children from aggregate exposure to the pesticide chemical residues, in accordance with FFDCA section 408(b)(2)(C). (Note that changes to tolerance nomenclature do not constitute modifications of tolerances). These findings are discussed in detail in each RED or TRED. The references are available for inspection as described in this document under **SUPPLEMENTARY INFORMATION.**

In addition, EPA is proposing to revoke certain specific tolerances because either they are no longer needed or are associated with food uses that are no longer registered under FIFRA. Those instances where registrations were canceled were because the registrant failed to pay the required maintenance fee and/or the registrant voluntarily requested cancellation of one or more registered uses of the pesticide. It is EPA's general practice to propose revocation of those tolerances for residues of pesticide active ingredients on crop uses for which there are no active registrations under FIFRA, unless any person in comments on the proposal indicates a need for the tolerance to cover residues in or on imported commodities or legally treated domestic commodities.

Certain tolerances pertaining to the pesticides subject to this proposal have expired due to previous EPA regulation setting expiration dates. When the Agency finalizes the changes proposed in this document, EPA will also remove the expired tolerances from the Code of Federal Regulations. The amended regulatory text below reflects removal of the tolerances. The Agency is not accepting comments regarding the expired tolerances.

1. *Atrazine.* Based on available field trial data that showed combined atrazine residues of concern as high as 1.1 ppm in or on field corn forage harvested 60 days after treatment and product labels that show a pre-harvest interval (PHI) of 60 days for field corn forage, the Agency determined that the tolerance on corn, field, forage should be decreased from 15 to 1.5 ppm. Therefore, EPA is proposing in 40 CFR 180.220(a) to decrease the tolerance on corn, field, forage to 1.5 ppm.

Also, based on available field trial data that showed combined atrazine residues of concern as high as 0.18 ppm in or on sorghum forage harvested 60 days after a single pre-emergence 1X application and <0.1 ppm in or on sorghum forage harvested 45 days after a 0.25X pre-emergence application followed by one post-emergence 1X application (the maximum use pattern), and product labels that show PHIs of 60 and 45 days for pre-emergence and post-emergence treatment of sorghum forage, respectively, the Agency determined that the tolerances on sorghum, forage, forage and sorghum, grain forage should each be decreased from 15 to 0.25 ppm, and sorghum, grain forage revised to sorghum, grain, forage. Therefore, EPA is proposing in 40 CFR 180.220(a) to decrease the tolerance on sorghum, forage, forage to 0.25 ppm and decrease the tolerance on sorghum, grain forage to 0.25 ppm and revise it to sorghum, grain, forage.

2. *Chloroneb.* In the **Federal Register** notice of May 25, 2007 (72 FR 29315) (FRL–8121–6), EPA published a notice of receipt of requests to voluntarily cancel certain uses, including uses of chloroneb as a seed treatment on beans, cowpeas, cotton, lupine, soybeans, and sugarbeets. In the **Federal Register** notice of November 7, 2007 (72 FR 62847) (FRL–8154–7), EPA approved cancellation of the affected product registrations and permitted the registrant to sell and distribute existing stocks of the affected products containing chloroneb for one year after the date of the request; *i.e.,* until February 7, 2008. Persons other than registrant are permitted to sell, distribute, and/or use existing stocks of canceled chloroneb products until they are exhausted, provided that the use complies with the EPA approved label and labeling of the affected products. In the **Federal Register** notice of April 16, 2008 (73 FR 20642) (FRL–8358–5), EPA published a notice of receipt of requests to voluntarily cancel certain registrations, including uses of chloroneb as a seed treatment on beans and cotton, the last uses of chloroneb as seed treatments in the United States. On October 14, 2008, EPA approved cancellation of the last seed treatment product registrations for use of chloroneb. The registrant is permitted to sell and distribute existing stocks of the

affected products containing chloroneb for one year after the date of the request; *i.e.,* until April 16, 2009. Persons other than registrant are permitted to sell, distribute, and/or use existing stocks of canceled chloroneb products until they are exhausted, provided that the use complies with the EPA approved label and labeling of the affected product.

EPA believes that existing stocks are likely to be exhausted by April 16, 2012. Therefore, EPA is proposing to revoke the tolerances for chloroneb in 40 CFR 180.257(a) on bean, dry, seed; bean, succulent; beet, sugar, roots; beet, sugar, tops; cowpea, forage; cowpea, hay; cattle, fat; cattle, meat; cattle, meat byproducts; cotton, gin byproducts; cotton, undelinted seed; goat, fat; goat, meat; goat, meat byproducts; hog, fat; hog, meat; hog, meat byproducts; horse, fat; horse, meat; horse, meat byproducts; milk; sheep, fat; sheep, meat; sheep, meat byproducts; soybean, forage; soybean, hay; and soybean, seed; each with an expiration/revocation date of April 16, 2012.

In order to describe more clearly the measurement and scope or coverage of the tolerances, EPA is proposing to revise the introductory text containing the tolerance expression in 40 CFR 180.257(a) to read as follows:

Tolerances are established for residues of the fungicide chloroneb, including its metabolites and degradates, in or on the commodities in the table in this paragraph. Compliance with the tolerance levels specified in this paragraph is to be determined by measuring only the sum of chloroneb, 1,4-dichloro-2,5-dimethoxybenzene, and its metabolite 2,5-dichloro-4-methoxyphenol (free and conjugated), calculated as the stoichiometric equivalent of chloroneb, in or on the commodity.

3. *Chlorpyrifos.* There are no active registrations, and there have been none, for use of chlorpyrifos in or on lettuce in the United States. EPA established in 40 CFR 180.342 the lettuce tolerance for chlorpyrifos on September 17, 2008 (73 FR 53732) (FRL–8375–2). However, while the chlorpyrifos IRED of 2001 and RED of 2006 recommended a tolerance on lettuce, noting petition 4F3132 which had been submitted on July 31, 1984, the registrant had withdrawn the petition on July 24, 2006. Therefore, the lettuce tolerance is no longer needed and should be revoked. Consequently, EPA is proposing to revoke the tolerance in 40 CFR 180.342(a)(1) on lettuce.

4. *Clofencet.* In accordance with current Agency practice, EPA is proposing to revise 40 CFR 180.497 by redesignating currently existing paragraph (b) as paragraph (d) for indirect or inadvertent residues, adding and reserving new paragraph (b) for tolerances with section 18 emergency exemptions, and adding and reserving new paragraph (c) for tolerances with regional registrations.

In the **Federal Register** of April 28, 2010 (75 FR 22404) (FRL–8822–1), EPA published a notice of receipt of requests to voluntarily cancel all pesticide registrations containing clofencet. In the **Federal Register** notice of July 14, 2010 (75 FR 40825) (FRL–8833–4), EPA approved cancellation of the last FIFRA product registrations for use of clofencet in the United States. The registrant is permitted to sell and distribute existing stocks of the affected products containing clofencet until July 14, 2011. Persons other than the registrant are permitted to sell, distribute, and/or use existing stocks of canceled clofencet products until they are exhausted, provided that the use complies with the EPA approved label and labeling of the affected products. However, the registrant believes that there is little or no product in the channels of trade. Therefore, EPA is proposing to revoke the tolerances in 40 CFR 180.497(a) on cattle, fat; cattle, kidney; cattle, meat; cattle, meat byproducts, except kidney; egg; goat, fat; goat, kidney; goat, meat; goat, meat byproducts, except kidney; hog, fat; hog, kidney; hog, meat; hog, meat byproducts, except kidney; horse, fat; horse, kidney; horse, meat; horse, meat byproducts, except kidney; milk; poultry, fat; poultry, meat; poultry, meat byproducts; sheep, fat; sheep, kidney; sheep, meat; sheep, meat byproducts, except kidney; wheat, forage; wheat, grain; wheat, hay; and wheat, straw; each with an expiration/revocation date of July 14, 2012, and tolerances for indirect or inadvertent residues in newly designated 40 CFR 180.497(d) on grain, cereal, forage, fodder and straw, group 16, except rice, sweet corn, wheat, and wild rice; forage; grain, cereal, forage, fodder and straw, group 16, except rice, sweet corn, wheat, and wild rice; hay; grain, cereal, forage, fodder and straw, group 16, except rice, sweet corn, wheat, and wild rice; stover; grain, cereal, forage, fodder and straw, group 16, except rice, sweet corn, wheat, and wild rice; straw; grain, cereal group 15, except rice, sweet corn, wheat, and wild rice; soybean; soybean, forage; and soybean, hay; each with an expiration/revocation date of July 14, 2012.

In order to describe more clearly the measurement and scope or coverage of the tolerances, EPA is proposing to revise the introductory text containing the tolerance expression in 40 CFR 180.497(a) to read as follows:

Tolerances are established for residues of the plant growth regulator (hybridizing agent) clofencet, including its metabolites and degradates, in or on the commodities in the table in this paragraph. Compliance with the tolerance levels specified in this paragraph is to be determined by measuring only clofencet, potassium 2-(4-chlorophenyl)-3-ethyl-2,5-dihydro-5-oxo-4-pyridazinecarboxylate, expressed as the free acid, in or on the commodity.

Also, EPA is proposing to revise the introductory text containing the tolerance expression in newly designated 40 CFR 180.497(d) to read as follows:

Tolerances are established for indirect or inadvertent residues of the plant growth regulator (hybridizing agent) clofencet, including its metabolites and degradates, in or on the commodities in the table in this paragraph. Compliance with the tolerance levels specified in this paragraph is to be determined by measuring only clofencet, potassium 2-(4-chlorophenyl)-3-ethyl-2,5-dihydro-5-oxo-4-pyridazinecarboxylate, expressed as the free acid, in or on the commodity when present therein as a result of the application of clofencet to the growing crops in paragraph (a) of this section.

5. *N,N-Diethyl-2-(4-methylbenzyloxy)ethylamine hydrochloride.* Because there have been no active registrations for *N,N*-diethyl-2-(4-methylbenzyloxy)ethylamine hydrochloride in the United States since 2004, the sole existing tolerance, which is on orange, sweet, is no longer needed and should be revoked. Therefore, EPA is proposing to revoke the tolerance in 40 CFR 180.558(a) on orange, sweet and remove that section in its entirety.

6. *Endosulfan.* There have been no active registrations for use of endosulfan in the United States for rapeseed and watercress since October 2004; sugarcane since July 2005; grapes, succulent peas, pecans, and spinach since December 2005; barley, oats, rye, and wheat since October 2007. There are no active registrations for use of endosulfan in the United States for growing tea and there may never have been one. Therefore, these tolerances are no longer needed and should be revoked. Consequently, EPA is proposing to revoke the sole tolerance in 40 CFR 180.182(a)(2) on dried tea (24 ppm in or on dried tea, reflecting less than 0.1 ppm in beverage tea), remove paragraph (a)(2) in its entirety, and redesignate 40 CFR 180.182(a)(1) as (a). In addition, EPA is proposing to revoke the tolerances in newly designated 40 CFR 180.182(a) on barley, grain; barley, straw; grape; oat, grain; oat, straw; pea, succulent; pecan; rapeseed, seed; rye,

grain; rye, straw; spinach; sugarcane, cane; watercress; wheat, grain; and wheat, straw.

In a Memorandum of Agreement (MOA) between the endosulfan registrants and the Agency, made effective July 22, 2010, terms regarding registrant requests for voluntary cancellation of all existing FIFRA registrations for endosulfan were specified. In the **Federal Register** notice of November 10, 2010 (75 FR 69065) (FRL–8852–4), EPA approved cancellation of the last FIFRA section 24 and section 3 registrations, respectively, for use of endosulfan in the United States. The List 1 (Phase-Out Group A, which includes almond, apricot, carrots, dry beans, tart cherry, eggplant, filbert, also known as hazelnut, macadamia nut, plum, prune, sweet potato, and walnut) uses of existing stocks of the end-use products, for endosulfan, are prohibited after July 31, 2012, except for products intended for export consistent with the requirements of section 17 of FIFRA or proper disposal. (The MOA and FR notices are available electronically under docket ID number EPA–HQ–OPP–2002–0262). Therefore, EPA is proposing to revoke the tolerances for endosulfan in newly designated 40 CFR 180.182(a) on almond; almond hulls; apricot; bean; carrot, roots; cherry, tart; eggplant; hazelnut; nut, macadamia; plum; plum, prune; sweet potato, roots; and walnut; each with an expiration/revocation date of July 31, 2012.

The List 2 (Phase-Out Group B, which includes cabbage, celery (AZ only), cotton, lettuce, nectarine (non-CA), peach, and sweet cherry) uses of existing stocks of the end-use products, for endosulfan, are prohibited after July 31, 2012, except for products intended for export consistent with the requirements of section 17 of FIFRA or proper disposal. It should be noted that celery (non-AZ) and nectarine (CA only) uses are included in List 1. Therefore, EPA is proposing to revoke the tolerance for endosulfan in newly designated 40 CFR 180.182(a) on cabbage; celery; cherry, sweet; cotton, gin byproducts; cotton, undelinted seed; lettuce, head; lettuce, leaf; nectarine; and peach; each with an expiration/revocation date of July 31, 2012.

The List 3 (Phase-Out Group C, which includes pear) use of existing stocks of the end-use products, for endosulfan, are prohibited after July 31, 2013, except for products intended for export consistent with the requirements of section 17 of FIFRA or proper disposal. Therefore, EPA is proposing to revoke the tolerance for endosulfan in newly designated 40 CFR 180.182(a) on pear with an expiration/revocation date of July 31, 2013.

The List 4 (Phase-Out Group D, which includes apple, blueberry, pepper, potato, pumpkin, sweet corn, tomato, and winter squash) uses of existing stocks of the end-use products, for endosulfan, in the state of Florida are prohibited after December 31, 2014, except for products intended for export consistent with the requirements of section 17 of FIFRA or proper disposal. The List 5 (Phase-Out Group E which includes apple, blueberry, pepper, potato, pumpkin, sweet corn, tomato, and winter squash) uses of existing stocks of the end-use products, for endosulfan, in the United States (except Florida) are prohibited after July 31, 2015, except for products intended for export consistent with the requirements of section 17 of FIFRA or proper disposal. Endosulfan uses on pumpkin and winter squash (members of vegetable, cucurbit, group 9) are included in Phase-Out Groups D and E. Therefore, EPA is proposing to revoke the tolerances for endosulfan in newly designated 40 CFR 180.182(a) on apple; apple, wet pomace; blueberry; corn, sweet, forage; corn, sweet, kernel plus cob with husks removed; corn, sweet, stover; pepper; potato; tomato; and vegetable, cucurbit, group 9; and concomitantly revise 40 CFR 180.182(c) and establish tolerances on apple at 1.0 ppm; apple, wet pomace at 5.0 ppm; blueberry at 0.3 ppm; corn, sweet, forage at 12.0 ppm; corn, sweet, kernel plus cob with husks removed at 0.2 ppm; corn, sweet, stover at 14.0 ppm; pepper at 2.0 ppm; potato at 0.2 ppm; pumpkin at 1.0 ppm; squash, winter at 1.0 ppm; and tomato at 1.0 ppm in newly designated 40 CFR 180.182(c)(1) for regional tolerances for use in the state of Florida, each with an expiration date of December 31, 2014, and establish tolerances on apple at 1.0 ppm; apple, wet pomace at 5.0 ppm; blueberry at 0.3 ppm; corn, sweet, forage at 12.0 ppm; corn, sweet, kernel plus cob with husks removed at 0.2 ppm; corn, sweet, stover at 14.0 ppm; pepper at 2.0 ppm; potato at 0.2 ppm; pumpkin at 1.0 ppm; squash, winter at 1.0 ppm; and tomato at 1.0 ppm in newly designated 180.182(c)(2) for regional tolerances for use in the United States (except Florida), each with an expiration date of July 31, 2015. In addition, because EPA is proposing to revoke the tolerance on vegetable, cucurbit, group 9 at 1.0 ppm in newly designated 40 CFR 180.182(a) and (Phase-Out Group B) uses on cantaloupe, cucumber, honeydew (muskmelon), summer squash, and watermelon are allowed until July 31, 2012, EPA is also proposing to establish individual tolerances at 1.0 ppm in newly designated 40 CFR 180.182(a) for cantaloupe; cucumber; muskmelon; squash, summer; and watermelon; each with an expiration/revocation date of July, 31, 2012.

The List 6 (Phase-Out Group F, which includes certain specific vegetable crops for seed) uses of existing stocks of the end-use products, for endosulfan, are prohibited after July 31, 2016, except for products intended for export consistent with the requirements of section 17 of FIFRA or proper disposal. Therefore, uses of endosulfan in or on vegetables grown for seed, including alfalfa, broccoli, Brussels sprouts, cabbage, cauliflower, collards, kale, kohlrabi, mustard greens, radishes, rutabagas, and turnips are prohibited after July 31, 2016. Following examination of product labels, the Agency classified these endosulfan seed treatment uses as non-food (see "Endosulfan: The Health Effects Division's REVISED Human Health Risk Assessment" in public docket EPA–HQ–OPP–2002–0262), and therefore these uses do not need to be covered by a tolerance. Because there are only active registrations in the United States for use of endosulfan in or on both alfalfa and turnip grown for seed crop, EPA is proposing to revoke the tolerances in newly designated 40 CFR 180.182(a) on alfalfa, forage; alfalfa, hay; turnip, roots; and turnip, tops at the time of publication of the final rule in the **Federal Register**. However, (within Phase-Out Group A) foliar treatment uses of endosulfan for broccoli, Brussels sprouts, cauliflower, collards, kale, and mustard greens are allowed until July 31, 2012. Consequently, EPA is proposing to revoke the tolerances in newly designated 40 CFR 180.182(a) on broccoli; Brussels sprouts; cauliflower; collards; kale; mustard greens; and mustard, seed; each with an expiration date of July 31, 2012.

Other List 6 (Phase-Out Group F, which includes livestock ear tags, strawberry (perennial/biennial), and pineapple) uses of existing stocks of the end-use products for endosulfan are prohibited after July 31, 2016, except for products intended for export consistent with the requirements of section 17 of FIFRA or proper disposal. (It should be noted that strawberry (annual) use is included in List1). Therefore, EPA is proposing to revoke the tolerances for endosulfan in newly designated 40 CFR 180.182(a) on cattle, fat; cattle, liver; cattle, meat; cattle, meat byproducts, except liver; goat, fat; goat, liver; goat, meat; goat, meat byproducts, except liver; hog, fat; hog, liver; hog, meat; hog,

meat byproducts, except liver; horse, fat; horse, liver; horse, meat; horse, meat byproducts, except liver; milk, fat; pineapple; pineapple, process residue; sheep, fat; sheep, liver; sheep, meat; sheep, meat byproducts, except liver; and strawberry; each with an expiration/revocation date of July 31, 2016.

In order to describe more clearly the measurement and scope or coverage of the tolerances, EPA is proposing to revise the introductory text containing the tolerance expression in newly designated 40 CFR 180.182(a) to read as follows:

Tolerances are established for residues of the insecticide endosulfan, including its metabolites and degradates, in or on the commodities in the table in this paragraph. Compliance with the tolerance levels specified in this paragraph is to be determined by measuring only the sum of endosulfan, 6,7,8,9,10,10-hexachloro-1,5,5a,6,9,9a-hexahydro-6,9-methano-2,4,3-benzodioxathiepin 3-oxide (alpha and beta isomers), and its metabolite endosulfan sulfate, 6,7,8,9,10,10-hexachloro-1,5,5a,6,9,9a-hexahydro-6,9-methano-2,4,3-benzodioxathiepin-3,3-dioxide, calculated as the stoichiometric equivalent of endosulfan, in or on the commodity.

Also, EPA is proposing to revise the introductory text containing the tolerance expression in newly designated 40 CFR 180.182(c)(1) to read as follows:

Tolerances with regional registration, as defined in § 180.1(l), are established for residues of the insecticide endosulfan, including its metabolites and degradates, in or on the commodities in the table in this paragraph, when endosulfan is used in the state of Florida. Compliance with the tolerance levels specified in this paragraph is to be determined by measuring only the sum of endosulfan, 6,7,8,9,10,10-hexachloro-1,5,5a,6,9,9a-hexahydro-6,9-methano-2,4,3-benzodioxathiepin 3-oxide (alpha and beta isomers), and its metabolite endosulfan sulfate, 6,7,8,9,10,10-hexachloro-1,5,5a,6,9,9a-hexahydro-6,9-methano-2,4,3-benzodioxathiepin-3,3-dioxide, calculated as the stoichiometric equivalent of endosulfan, in or on the commodity.

In addition, EPA is proposing to revise the introductory text containing the tolerance expression in newly designated 40 CFR 180.182(c)(2) to read as follows:

Tolerances with regional registration, as defined in § 180.1(l), are established for residues of the insecticide endosulfan, including its metabolites and degradates, in or on the commodities in the table in this paragraph, when endosulfan is used in the United States (except Florida). Compliance with the tolerance levels specified in this paragraph is to be determined by measuring only the sum of endosulfan, 6,7,8,9,10,10-hexachloro-1,5,5a,6,9,9a-hexahydro-6,9-methano-2,4,3-benzodioxathiepin 3-oxide (alpha and beta isomers), and its metabolite endosulfan sulfate, 6,7,8,9,10,10-hexachloro-1,5,5a,6,9,9a-hexahydro-6,9-methano-2,4,3-benzodioxathiepin-3,3-dioxide, calculated as the stoichiometric equivalent of endosulfan, in or on the commodity.

7. *Methidathion.* After the Final Work Plan was published in August 2009 as part of the registration review process for methidathion, the registrants requested to voluntarily cancel all of their methidathion product registrations. In the **Federal Register** of April 7, 2010 (75 FR 17735) (FRL–8819–1), EPA published a notice of receipt of requests to voluntarily cancel all pesticide registrations containing methidathion. In the **Federal Register** notice of June 2, 2010 (75 FR 30824) (FRL–8828–4), EPA approved cancellation of the last FIFRA product registrations for use of methidathion in the United States. After December 31, 2012, registrants are prohibited from selling or distributing existing stocks of products containing methidathion labeled for all uses. After December 31, 2014, persons other than registrants are prohibited from selling or distributing existing stocks of products containing methidathion labeled for all uses. The cancellation order of June 2, 2010 (75 FR 30824) also stated that after December 31, 2014, existing stocks of products containing methidathion labeled for all uses, already in the hands of users can be used legally until they are exhausted, provided that the use complies with the EPA approved label and labeling of the affected product. However, based on communications with the registrants since the cancellation, EPA believes that existing stocks are likely to be exhausted by December 31, 2016. Therefore, EPA is proposing to revoke the tolerances in 40 CFR 180.298(a) on almond, hulls; artichoke, globe; citrus, oil; cotton, undelinted seed; fruit, citrus, group 10, except tangerine; fruit, pome, group 11; fruit, stone, group 12; mango; nut, tree, group 14; olive; safflower, seed; sorghum, forage, forage; sorghum, grain, forage; sorghum, grain, grain; sorghum, grain, stover; sunflower, seed; and tangerine; each with an expiration/revocation date of December 31, 2016, and regional tolerances in 180.298(c) on kiwifruit; longan; starfruit; and sugar apple; each with an expiration/revocation date of December 31, 2016.

In order to describe more clearly the measurement and scope or coverage of the tolerances, EPA is proposing to revise the introductory text containing the tolerance expression in 40 CFR 180.298(a) to read as follows:

Tolerances are established for residues of the insecticide methidathion, including its metabolites and degradates, in or on the commodities in the table in this paragraph. Compliance with the tolerance levels specified in this paragraph is to be determined by measuring only methidathion, *S*-[(5-methoxy-2-oxo-1,3,4-thiadiazol-3(2*H*)-yl)methyl] *O,O*-dimethyl phosphorodithioate, in or on the commodity.

Also, EPA is proposing to revise the introductory text containing the tolerance expression in 40 CFR 180.298(c) to read as follows:

Tolerances with regional registration, as defined in § 180.1(l), are established for residues of the insecticide methidathion, including its metabolites and degradates, in or on the commodities in the table in this paragraph. Compliance with the tolerance levels specified in this paragraph is to be determined by measuring only methidathion, *S*-[(5-methoxy-2-oxo-1,3,4-thiadiazol-3(2*H*)-yl)methyl] *O,O*-dimethyl phosphorodithioate, in or on the commodity.

In addition, EPA is removing tolerances that expired in 2008 for methidathion in 40 CFR 180.298(c).

8. *Methyl parathion and ethyl parathion.* In March 2010, EPA and the methyl parathion registrants signed a Memorandum of Agreement (MOA) stating that all methyl parathion product registrations would be canceled as specified therein. In the **Federal Register** notice of April 28, 2010 (75 FR 22402) (FRL–8822–6), EPA published a notice of receipt of requests to voluntarily cancel specific methyl parathion registrations, which included the last registrations for use of methyl parathion in or on alfalfa, almonds, barley, corn, cotton, grasses, oats, onions, peas, potatoes, rapeseed, rice, rye, soybeans, sunflowers, and wheat in the United States. In the **Federal Register** notices of November 10, 2010 (75 FR 69073) (FRL–8851–5) and January 26, 2011 (76 FR 4692) (FRL–8856–9), EPA published notices of receipt of requests to voluntarily cancel specific methyl parathion registrations, which included the last registrations for

use of methyl parathion in or on sweet potatoes and walnuts in the United States. In the **Federal Register** notice of July 27, 2010 (75 FR 43981) (FRL–8838–6), EPA approved the cancellations and permitted use of existing stocks of the end-use products for methyl parathion in or on alfalfa, almonds, barley, corn, cotton, grasses, oats, onions, peas, potatoes, rapeseed, rice, rye, soybeans, sunflowers, and wheat through December 31, 2013. Also, in the **Federal Register** notices of February 25, 2011 (76 FR 10587) (FRL–8863–4) and March 23, 2011 (76 FR 16417) (FRL–8867–8), EPA approved the cancellations and permitted use of existing stocks of the end-use products for methyl parathion in or on sweet potatoes and walnuts until exhausted, provided use is consistent with the terms of the previously approved labeling on, or that accompanied, the canceled products. In accordance with the MOA, all use of existing stocks of the end-use products for methyl parathion, including in or on sweet potatoes and walnuts, are permitted through December 31, 2013, but not thereafter. (The MOA and FR notices are available electronically under docket ID numbers EPA–HQ–OPP–2009–0332 and EPA–HQ–OPP–2009–1017). Therefore, EPA is proposing to revoke the tolerances for methyl parathion in 40 CFR 180.121(a) on alfalfa, forage; alfalfa, hay; almond; almond, hulls; barley; corn, field, forage; corn, field, grain; corn, pop, grain; corn, sweet, forage; corn, sweet, kernel plus cob with husks removed; cotton, undelinted seed; grass, forage; oat; onion; pea, field, vines; potato; rapeseed, seed; rice, grain; soybean, hay; soybean, seed; sunflower, seed; sweet potato, roots; walnut; and wheat; each with an expiration date of December 31, 2013. Also, because there have been no active registrations in the United States for use of ethyl parathion in or on rye since 1989, the interim tolerance on rye in 40 CFR 180.319 for "Parathion (*O,O*-diethyl-*O*-p-nitrophenythiophosphate) or its methyl homolog" should be separated into interim tolerances on rye for ethyl parathion and methyl parathion to allow an expiration/revocation date for methyl parathion and revocation for ethyl parathion on the date of publication of the final rule in the **Federal Register.** Therefore, EPA is proposing to separate the existing interim tolerance for parathion on rye in 40 CFR 180.319 into one for methyl parathion and another for ethyl parathion, revoke the newly designated interim tolerance for methyl parathion on rye with an expiration/revocation date of December 31, 2013, and revoke the newly designated interim tolerance on rye for ethyl parathion on the date of publication of the final rule in the **Federal Register**. Also, because all the tolerances for ethyl parathion in 40 CFR 180.122 expired in 2005, EPA will remove that section in its entirety. In addition, because there have been no active registrations for methyl parathion use on peanuts since 1998, EPA is proposing to revoke the tolerance in 40 CFR 180.121(a) on peanut on the date of publication of the final rule in the **Federal Register**. Moreover, EPA is removing tolerances that expired in 2009 for methyl parathion in 40 CFR 180.121(a).

In order to describe more clearly the measurement and scope or coverage of the tolerances, EPA is proposing to revise the introductory text containing the tolerance expression in 40 CFR 180.121(a) to read as follows:

Tolerances are established for residues of the insecticide methyl parathion, including its metabolites and degradates, in or on the commodities in the table in this paragraph. Compliance with the tolerance levels specified in this paragraph is to be determined by measuring only methyl parathion, *O,O*-dimethyl *O*-(4-nitrophenyl) phosphorothioate, in or on the commodity.

B. What is the agency's authority for taking this action?

A "tolerance" represents the maximum level for residues of pesticide chemicals legally allowed in or on raw agricultural commodities and processed foods. Section 408 of FFDCA, 21 U.S.C. 346a, as amended by FQPA of 1996, Public Law 104–170, authorizes the establishment of tolerances, exemptions from tolerance requirements, modifications in tolerances, and revocation of tolerances for residues of pesticide chemicals in or on raw agricultural commodities and processed foods. Without a tolerance or exemption, food containing pesticide residues is considered to be unsafe and therefore "adulterated" under section 402(a) of FFDCA, 21 U.S.C. 342(a). Such food may not be distributed in interstate commerce (21 U.S.C. 331(a)). For a food-use pesticide to be sold and distributed, the pesticide must not only have appropriate tolerances under the FFDCA, but also must be registered under FIFRA (7 U.S.C. 136 *et seq.*). Food-use pesticides not registered in the United States must have tolerances in order for commodities treated with those pesticides to be imported into the United States.

EPA is proposing these tolerance actions for atrazine to implement the tolerance recommendations made during the reregistration and tolerance reassessment processes. As part of these processes, EPA is required to determine whether each of the amended tolerances meets the safety standard of FQPA. The safety finding determination is discussed in detail in the atrazine RED. REDs and TREDs recommend the implementation of certain tolerance actions, including modifications to reflect current use patterns, to meet safety findings, and change commodity names and groupings in accordance with new EPA policy. Printed and electronic copies of the REDs and TREDs are available as provided in Unit II.A.

REDs and TREDs contain the Agency's evaluation of the database for these pesticides, including requirements for additional data on the active ingredients to confirm the potential human health and environmental risk assessments associated with current product uses, and in REDs state conditions under which these uses and products will be eligible for reregistration. The REDs and TREDs recommended the establishment, modification, and/or revocation of specific tolerances. RED and TRED recommendations such as establishing or modifying tolerances, and in some cases revoking tolerances, are the result of assessment under the FFDCA standard of "reasonable certainty of no harm." However, tolerance revocations recommended in REDs and TREDs that are proposed in this document do not need such assessment when the tolerances are no longer necessary.

EPA's general practice is to propose revocation of tolerances for residues of pesticide active ingredients on crops for which FIFRA registrations no longer exist and on which the pesticide may therefore no longer be used in the United States. EPA has historically been concerned that retention of tolerances that are not necessary to cover residues in or on legally treated foods may encourage misuse of pesticides within the United States. Nonetheless, EPA will establish and maintain tolerances even when corresponding domestic uses are canceled if the tolerances, which EPA refers to as "import tolerances," are necessary to allow importation into the United States of food containing such pesticide residues. However, where there are no imported commodities that require these import tolerances, the Agency believes it is appropriate to revoke tolerances for unregistered pesticides in order to prevent potential misuse.

Furthermore, as a general matter, the Agency believes that retention of import

tolerances not needed to cover any imported food may result in unnecessary restriction on trade of pesticides and foods. Under section 408 of FFDCA, a tolerance may only be established or maintained if EPA determines that the tolerance is safe based on a number of factors, including an assessment of the aggregate exposure to the pesticide and an assessment of the cumulative effects of such pesticide and other substances that have a common mechanism of toxicity. In doing so, EPA must consider potential contributions to such exposure from all tolerances. If the cumulative risk is such that the tolerances in aggregate are not safe, then every one of these tolerances is potentially vulnerable to revocation. Furthermore, if unneeded tolerances are included in the aggregate and cumulative risk assessments, the estimated exposure to the pesticide would be inflated. Consequently, it may be more difficult for others to obtain needed tolerances or to register needed new uses. To avoid potential trade restrictions, the Agency is proposing to revoke tolerances for residues on crops uses for which FIFRA registrations no longer exist, unless someone expresses a need for such tolerances. Through this proposed rule, the Agency is inviting individuals who need these import tolerances to identify themselves and the tolerances that are needed to cover imported commodities.

Parties interested in retention of the tolerances should be aware that additional data may be needed to support retention. These parties should be aware that, under FFDCA section 408(f), if the Agency determines that additional information is reasonably required to support the continuation of a tolerance, EPA may require that parties interested in maintaining the tolerances provide the necessary information. If the requisite information is not submitted, EPA may issue an order revoking the tolerance at issue.

C. When do these actions become effective?

With the exception of certain existing tolerances for chloroneb, clofencet, endosulfan, methidathion, and methyl parathion for which EPA is proposing specific expiration/revocation dates and proposed new tolerances to be established for endosulfan for which EPA is also proposing expiration/revocation dates, the Agency is proposing that these tolerance revocations, tolerance modifications, and revisions of tolerance nomenclature and tolerance expression become effective on the date of publication of the final rule in the **Federal Register**. With the exception of the proposed expiration/revocation of specific (existing and new) tolerances for chloroneb, clofencet, endosulfan, methidathion, and methyl parathion, the Agency believes that existing stocks of pesticide products labeled for the uses associated with the tolerances proposed for revocation have been completely exhausted and that treated commodities have cleared the channels of trade. EPA is proposing an expiration/revocation date of April 16, 2012 for all of the chloroneb tolerances proposed herein for revocation; July 14, 2012 for all of the clofencet tolerances proposed herein for revocation; various dates for the endosulfan tolerances proposed for revocation as described herein in Unit II.A.; December 31, 2016 for all of the methidathion tolerances proposed herein for revocation; and December 31, 2013 for the methyl parathion tolerances proposed herein for revocation with the exception of the tolerance on peanut. The Agency believes that these revocation dates allow users to exhaust stocks and allows sufficient time for passage of treated commodities through the channels of trade. However, with the exception of endosulfan and methyl parathion whose registrants have a Memorandum of Agreement with the Agency concerning canceled uses and agreed dates for sale, distribution, and use of existing stocks, if EPA is presented with information that existing stocks would still be available and that information is verified, the Agency will consider extending the expiration date of the tolerance. If you have comments regarding existing stocks and whether the effective date allows sufficient time for treated commodities to clear the channels of trade, please submit comments as described under **SUPPLEMENTARY INFORMATION**.

Any commodities listed in this proposal treated with the pesticides subject to this proposal, and in the channels of trade following the tolerance revocations, shall be subject to FFDCA section 408(1)(5), as established by FQPA. Under this unit, any residues of these pesticides in or on such food shall not render the food adulterated so long as it is shown to the satisfaction of the Food and Drug Administration that:

1. The residue is present as the result of an application or use of the pesticide at a time and in a manner that was lawful under FIFRA, and

2. The residue does not exceed the level that was authorized at the time of the application or use to be present on the food under a tolerance or exemption from tolerance. Evidence to show that food was lawfully treated may include records that verify the dates when the pesticide was applied to such food.

III. International Residue Limits

In making its tolerance decisions, EPA seeks to harmonize U.S. tolerances with international standards whenever possible, consistent with U.S. food safety standards and agricultural practices. EPA considers the international maximum residue limits (MRLs) established by the Codex Alimentarius Commission (Codex), as required by FFDCA section 408(b)(4). The Codex Alimentarius is a joint U.N. Food and Agriculture Organization/World Health Organization food standards program, and it is recognized as an international food safety standards-setting organization in trade agreements to which the United States is a party. EPA may establish a tolerance that is different from a Codex MRL; however, FFDCA section 408(b)(4) requires that EPA explain the reasons for departing from the Codex level.

The Codex has not established a MRL for atrazine, chloroneb, clofencet, N,N-diethyl-2-(4-methylbenzyloxy)ethylamine hydrochloride, ethyl parathion, or MRL on lettuce for chlorpyrifos.

The Codex has established MRLs for endosulfan in or on various commodities including melons, except watermelon at 2 mg/kg and tea, green, black at 30 mg/kg. These MRLs are different than the tolerances established for endosulfan in the United States because of differences in use patterns and/or good agricultural practices.

The Codex has established MRLs for methidathion in or on various commodities including apple at 0.5 mg/kg; cherries at 0.2 mg/kg; cottonseed at 1 mg/kg; nectarine at 0.2 mg/kg; olives at 1 mg/kg; peach at 0.2 mg/kg; pear at 1 mg/kg; and plums (including prunes) at 0.2 mg/kg. These MRLs are different than the tolerances established for methidathion in the United States because of differences in use patterns and/or good agricultural practices.

The Codex has established MRLs for methyl parathion (parathion-methyl) in or on various commodities including potato at 0.05 mg/kg. The MRL is different than the tolerance established for methyl parathion in the United States because of differences in use patterns and/or good agricultural practices.

IV. Statutory and Executive Order Reviews

In this proposed rule, EPA is proposing to establish tolerances under FFDCA section 408(e), and also modify and revoke specific tolerances

established under FFDCA section 408. The Office of Management and Budget (OMB) has exempted these types of actions (*e.g.,* establishment and modification of a tolerance and tolerance revocation for which extraordinary circumstances do not exist) from review under Executive Order 12866, entitled *Regulatory Planning and Review* (58 FR 51735, October 4, 1993). Because this proposed rule has been exempted from review under Executive Order 12866 due to its lack of significance, this proposed rule is not subject to Executive Order 13211, entitled *Actions Concerning Regulations That Significantly Affect Energy Supply, Distribution, or Use* (66 FR 28355, May 22, 2001). This proposed rule does not contain any information collections subject to OMB approval under the Paperwork Reduction Act (PRA), 44 U.S.C. 3501 *et seq.,* or impose any enforceable duty or contain any unfunded mandate as described under Title II of the Unfunded Mandates Reform Act of 1995 (UMRA) (Pub. L. 104–4). Nor does it require any special considerations as required by Executive Order 12898, entitled *Federal Actions to Address Environmental Justice in Minority Populations and Low-Income Populations* (59 FR 7629, February 16, 1994); or OMB review or any other Agency action under Executive Order 13045, entitled *Protection of Children from Environmental Health Risks and Safety Risks* (62 FR 19885, April 23, 1997). This action does not involve any technical standards that would require Agency consideration of voluntary consensus standards pursuant to section 12(d) of the National Technology Transfer and Advancement Act of 1995 (NTTAA), Public Law 104–113, section 12(d) (15 U.S.C. 272 note). Pursuant to the Regulatory Flexibility Act (RFA) (5 U.S.C. 601 *et seq.*), the Agency previously assessed whether establishment of tolerances, exemptions from tolerances, raising of tolerance levels, expansion of exemptions, or revocations might significantly impact a substantial number of small entities and concluded that, as a general matter, these actions do not impose a significant economic impact on a substantial number of small entities. These analyses for tolerance establishments and modifications, and for tolerance revocations were published on May 4, 1981 (46 FR 24950) and on December 17, 1997 (62 FR 66020) (FRL–5753–1), respectively, and were provided to the Chief Counsel for Advocacy of the Small Business Administration. Taking into account this analysis, and available information concerning the pesticides listed in this proposed rule, the Agency hereby certifies that this proposed rule will not have a significant negative economic impact on a substantial number of small entities. In a memorandum dated May 25, 2001, EPA determined that eight conditions must all be satisfied in order for an import tolerance or tolerance exemption revocation to adversely affect a significant number of small entity importers, and that there is a negligible joint probability of all eight conditions holding simultaneously with respect to any particular revocation. (This Agency document is available in the docket of this proposed rule). Furthermore, for the pesticide named in this proposed rule, the Agency knows of no extraordinary circumstances that exist as to the present proposal that would change the EPA's previous analysis. Any comments about the Agency's determination should be submitted to the EPA along with comments on the proposal, and will be addressed prior to issuing a final rule. In addition, the Agency has determined that this action will not have a substantial direct effect on States, on the relationship between the national government and the States, or on the distribution of power and responsibilities among the various levels of government, as specified in Executive Order 13132, entitled *Federalism* (64 FR 43255, August 10, 1999). Executive Order 13132 requires EPA to develop an accountable process to ensure "meaningful and timely input by State and local officials in the development of regulatory policies that have federalism implications." "Policies that have federalism implications" is defined in the Executive order to include regulations that have "substantial direct effects on the States, on the relationship between the national government and the States, or on the distribution of power and responsibilities among the various levels of government." This proposed rule directly regulates growers, food processors, food handlers, and food retailers, not States. This action does not alter the relationships or distribution of power and responsibilities established by Congress in the preemption provisions of section 408(n)(4) of FFDCA. For these same reasons, the Agency has determined that this proposed rule does not have any "tribal implications" as described in Executive Order 13175, entitled *Consultation and Coordination with Indian Tribal Governments* (65 FR 67249, November 9, 2000). Executive Order 13175, requires EPA to develop an accountable process to ensure "meaningful and timely input by tribal officials in the development of regulatory policies that have tribal implications." "Policies that have tribal implications" is defined in the Executive order to include regulations that have "substantial direct effects on one or more Indian tribes, on the relationship between the Federal Government and the Indian tribes, or on the distribution of power and responsibilities between the Federal Government and Indian tribes." This proposed rule will not have substantial direct effects on tribal governments, on the relationship between the Federal Government and Indian tribes, or on the distribution of power and responsibilities between the Federal Government and Indian tribes, as specified in Executive Order 13175. Thus, Executive Order 13175 does not apply to this proposed rule.

List of Subjects in 40 CFR Part 180

Environmental protection, Administrative practice and procedure, Agricultural commodities, Pesticides and pests, Reporting and recordkeeping requirements.

Dated: April 15, 2011.

Steven Bradbury,

Director, Office of Pesticide Programs.

Therefore, it is proposed that 40 CFR chapter I be amended as follows:

PART 180—[AMENDED]

1. The authority citation for part 180 continues to read as follows:

Authority: 21 U.S.C. 321(q), 346a and 371.

2. Section 180.121 is amended by revising paragraph (a) to read as follows:

§ 180.121 Methyl parathion; tolerances for residues.

(a) *General.* Tolerances are established for residues of the insecticide methyl parathion, including its metabolites and degradates, in or on the commodities in the table in this paragraph. Compliance with the tolerance levels specified in this paragraph is to be determined by measuring only methyl parathion, *O,O*-dimethyl *O*-(4-nitrophenyl) phosphorothioate, in or on the commodity.

Commodity	Parts per million	Expiration/ revocation date
Alfalfa, forage	1.25	12/31/13
Alfalfa, hay	5.0	12/31/13
Almond	0.1	12/31/13
Almond, hulls	3.0	12/31/13
Barley	1.0	12/31/13
Corn, field, forage	1.0	12/31/13
Corn, field, grain	1.0	12/31/13
Corn, pop, grain	1.0	12/31/13
Corn, sweet, forage	1.0	12/31/13
Corn, sweet, kernel plus cob with husks removed	1.0	12/31/13
Cotton, undelinted seed	0.75	12/31/13
Grass, forage	1.0	12/31/13
Oat	1.0	12/31/13
Onion	1.0	12/31/13
Pea, field, vines	1.0	12/31/13
Potato	0.1	12/31/13
Rapeseed, seed	0.2	12/31/13
Rice, grain	1.0	12/31/13
Soybean, hay	1.0	12/31/13
Soybean, seed	0.1	12/31/13
Sunflower, seed	0.2	12/31/13
Sweet potato, roots	0.1	12/31/13
Walnut	0.1	12/31/13
Wheat	1.0	12/31/13

* * * * *

§ 180.122 [Removed]

3. Section 180.122 is removed.

4. Section 180.182 is amended revising paragraphs (a) and (c) to read as follows:

§ 180.182 Endosulfan; tolerances for residues.

(a) *General.* Tolerances are established for residues of the insecticide endosulfan, including its metabolites and degradates, in or on the commodities in the table in this paragraph. Compliance with the tolerance levels specified in this paragraph is to be determined by measuring only the sum of endosulfan, 6,7,8,9,10,10-hexachloro-1,5,5a,6,9,9a-hexahydro-6,9-methano-2,4,3-benzodioxathiepin 3-oxide (alpha and beta isomers), and its metabolite endosulfan sulfate, 6,7,8,9,10,10-hexachloro-1,5,5a,6,9,9a-hexahydro-6,9-methano-2,4,3-benzodioxathiepin-3,3-dioxide, calculated as the stoichiometric equivalent of endosulfan, in or on the commodity.

Commodity	Parts per million	Expiration/ revocation date
Almond	0.3	7/31/12
Almond, hulls	1.0	7/31/12
Apricot	2.0	7/31/12
Bean	2.0	7/31/12
Broccoli	3.0	7/31/12
Brussels sprouts	2.0	7/31/12
Cabbage	4.0	7/31/12
Cantaloupe	1.0	7/31/12
Carrot, roots	0.2	7/31/12
Cattle, fat	13.0	7/31/16
Cattle, liver	5.0	7/31/16
Cattle, meat	2.0	7/31/16
Cattle, meat byproducts, except liver	1.0	7/31/16
Cauliflower	2.0	7/31/12
Celery	8.0	7/31/12
Cherry, sweet	2.0	7/31/12
Cherry, tart	2.0	7/31/12
Collards	2.0	7/31/12
Cotton, gin byproducts	30.0	7/31/12
Cotton, undelinted seed	1.0	7/31/12
Cucumber	1.0	7/31/12
Eggplant	1.0	7/31/12
Goat, fat	13.0	7/31/16
Goat, liver	5.0	7/31/16
Goat, meat	2.0	7/31/16
Goat, meat byproducts, except liver	1.0	7/31/16
Hazelnut	0.2	7/31/12
Hog, fat	13.0	7/31/16
Hog, liver	5.0	7/31/16
Hog, meat	2.0	7/31/16

Commodity	Parts per million	Expiration/ revocation date
Hog, meat byproducts, except liver	1.0	7/31/16
Horse, fat	13.0	7/31/16
Horse, liver	5.0	7/31/16
Horse, meat	2.0	7/31/16
Horse, meat byproducts, except liver	1.0	7/31/16
Kale	2.0	7/31/12
Lettuce, head	11.0	7/31/12
Lettuce, leaf	6.0	7/31/12
Milk, fat	2.0	7/31/16
Muskmelon	1.0	7/31/12
Mustard greens	2.0	7/31/12
Mustard, seed	0.2	7/31/12
Nectarine	2.0	7/31/12
Nut, macadamia	0.2	7/31/12
Peach	2.0	7/31/12
Pear	2.0	7/31/13
Pineapple	1.0	7/31/16
Pineapple, process residue	20.0	7/31/16
Plum	2.0	7/31/12
Plum, prune	2.0	7/31/12
Sheep, fat	13.0	7/31/16
Sheep, liver	5.0	7/31/16
Sheep, meat	2.0	7/31/16
Sheep, meat byproducts, except liver	1.0	7/31/16
Squash, summer	1.0	7/31/12
Strawberry	2.0	7/31/16
Sweet potato, roots	0.15	7/31/12
Walnut	0.2	7/31/12
Watermelon	1.0	7/31/12

* * * * *

(c) *Tolerances with regional registrations.* (1) Tolerances with regional registration, as defined in § 180.1(l), are established for residues of the insecticide endosulfan, including its metabolites and degradates, in or on the commodities in the table in this paragraph, when endosulfan is used in the state of Florida. Compliance with the tolerance levels specified in this paragraph is to be determined by measuring only the sum of endosulfan, 6,7,8,9,10,10-hexachloro-1,5,5a,6,9,9a-hexahydro-6,9-methano-2,4,3-benzodioxathiepin 3-oxide (alpha and beta isomers), and its metabolite endosulfan sulfate, 6,7,8,9,10,10-hexachloro-1,5,5a,6,9,9a-hexahydro-6,9-methano-2,4,3-benzodioxathiepin-3,3-dioxide, calculated as the stoichiometric equivalent of endosulfan, in or on the commodity.

Commodity	Parts per million	Expiration/ revocation date
Apple	1.0	12/31/14
Apple, wet pomace	5.0	12/31/14
Blueberry	0.3	12/31/14
Corn, sweet, forage	12.0	12/31/14
Corn, sweet, kernel plus cob with husks removed	0.2	12/31/14
Corn, sweet, stover	14.0	12/31/14
Pepper	2.0	12/31/14
Potato	0.2	12/31/14
Pumpkin	1.0	12/31/14
Squash, winter	1.0	12/31/14
Tomato	1.0	12/31/14

(2) Tolerances with regional registration, as defined in § 180.1(l), are established for residues of the insecticide endosulfan, including its metabolites and degradates, in or on the commodities in the table in this paragraph, when endosulfan is used in the United States (except Florida). Compliance with the tolerance levels specified in this paragraph is to be determined by measuring only the sum of endosulfan, 6,7,8,9,10,10-hexachloro-1,5,5a,6,9,9a-hexahydro-6,9-methano-2,4,3-benzodioxathiepin 3-oxide (alpha and beta isomers), and its metabolite endosulfan sulfate, 6,7,8,9,10,10-hexachloro-1,5,5a,6,9,9a-hexahydro-6,9-methano-2,4,3-benzodioxathiepin-3,3-dioxide, calculated as the stoichiometric equivalent of endosulfan, in or on the commodity.

Commodity	Parts per million	Expiration/ revocation date
Apple	1.0	7/31/15
Apple, wet pomace	5.0	7/31/15
Blueberry	0.3	7/31/15

Commodity	Parts per million	Expiration/ revocation date
Corn, sweet, forage	12.0	7/31/15
Corn, sweet, kernel plus cob with husks removed	0.2	7/31/15
Corn, sweet, stover	14.0	7/31/15
Pepper	2.0	7/31/15
Potato	0.2	7/31/15
Pumpkin	1.0	7/31/15
Squash, winter	1.0	7/31/15
Tomato	1.0	7/31/15

* * * * *

5. Section 180.220 is amended by revising the table in paragraph (a) to read as follows:

§ 180.220 Atrazine; tolerances for residues.

(a) * * *

Commodity	Parts per million
Cattle, fat	0.02
Cattle, meat	0.02
Cattle, meat byproducts	0.02
Corn, field, forage	1.5
Corn, field, grain	0.20
Corn, field, stover	0.5
Corn, pop, forage	1.5
Corn, pop, grain	0.20
Corn, pop, stover	0.5
Corn, sweet, forage	15
Corn, sweet, kernel plus cob with husks removed	0.20
Corn, sweet, stover	2.0
Goat, fat	0.02
Goat, meat	0.02
Goat, meat byproducts	0.02
Grass, forage	4.0
Grass, hay	4.0
Guava	0.05
Horse, fat	0.02
Horse, meat	0.02
Horse, meat byproducts	0.02
Milk	0.02
Nut, macadamia	0.20
Sheep, fat	0.02
Sheep, meat	0.02
Sheep, meat byproducts	0.02
Sorghum, forage, forage	0.25
Sorghum, grain, forage	0.25
Sorghum, grain, grain	0.20
Sorghum, grain, stover	0.50
Sugarcane, cane	0.20
Wheat, forage	1.5
Wheat, grain	0.10
Wheat, hay	5.0
Wheat, straw	0.50

* * * * *

6. Section 180.257 is amended by revising paragraph (a) to read to as follows:

§ 180.257 Chloroneb; tolerances for residues.

(a) *General.* Tolerances are established for residues of the fungicide chloroneb, including its metabolites and degradates, in or on the commodities in the table in this paragraph. Compliance with the tolerance levels specified in this paragraph is to be determined by measuring only the sum of chloroneb, 1,4-dichloro-2,5-dimethoxybenzene, and its metabolite 2,5-dichloro-4-methoxyphenol (free and conjugated), calculated as the stoichiometric equivalent of chloroneb, in or on the commodity.

Commodity	Parts per million	Expiration/ revocation date
Bean, dry, seed	0.2	4/16/12
Bean, succulent	0.2	4/16/12
Beet, sugar, roots	0.2	4/16/12
Beet, sugar, tops	0.2	4/16/12
Cowpea, forage	2.0	4/16/12
Cowpea, hay	2.0	4/16/12
Cattle, fat	0.2	4/16/12
Cattle, meat	0.2	4/16/12
Cattle, meat byproducts	0.2	4/16/12
Cotton, gin byproducts	1.0	4/16/12
Cotton, undelinted seed	0.2	4/16/12
Goat, fat	0.2	4/16/12
Goat, meat	0.2	4/16/12
Goat, meat byproducts	0.2	4/16/12
Hog, fat	0.2	4/16/12
Hog, meat	0.2	4/16/12
Hog, meat byproducts	0.2	4/16/12
Horse, fat	0.2	4/16/12
Horse, meat	0.2	4/16/12
Horse, meat byproducts	0.2	4/16/12
Milk	0.05	4/16/12
Sheep, fat	0.2	4/16/12
Sheep, meat	0.2	4/16/12
Sheep, meat byproducts	0.2	4/16/12
Soybean, forage	2.0	4/16/12
Soybean, hay	2.0	4/16/12
Soybean, seed	0.2	4/16/12

* * * * *

7. Section 180.298 is amended by revising paragraphs (a) and (c) to read as follows:

§ 180.298 Methidathion; tolerances for residues.

(a) *General.* Tolerances are established for residues of the insecticide methidathion, including its metabolites and degradates, in or on the commodities in the table in this paragraph. Compliance with the tolerance levels specified in this paragraph is to be determined by measuring only methidathion, *S*-[(5-methoxy-2-oxo-1,3,4-thiadiazol-3(2*H*)-yl)methyl] *O,O*-dimethyl phosphorodithioate, in or on the commodity.

Commodity	Parts per million	Expiration/ revocation date
Almond, hulls	6.0	12/31/16
Artichoke, globe	0.05	12/31/16
Citrus, oil	420.0	12/31/16
Cotton, undelinted seed	0.2	12/31/16
Fruit, citrus, group 10, except tangerine	4.0	12/31/16
Fruit, pome, group 11	0.05	12/31/16
Fruit, stone, group 12	0.05	12/31/16
Mango	0.05	12/31/16
Nut, tree, group 14	0.05	12/31/16
Olive	0.05	12/31/16
Safflower, seed	0.5	12/31/16
Sorghum, forage, forage	2.0	12/31/16
Sorghum, grain, forage	2.0	12/31/16
Sorghum, grain, grain	0.2	12/31/16
Sorghum, grain, stover	2.0	12/31/16
Sunflower, seed	0.5	12/31/16
Tangerine	6.0	12/31/16

* * * * *

(c) *Tolerances with regional registrations.* Tolerances with regional registration, as defined in § 180.1(l), are established for residues of the insecticide methidathion, including its metabolites and degradates, in or on the commodities in the table in this paragraph. Compliance with the tolerance levels specified in this paragraph is to be determined by measuring only methidathion, *S*-[(5-methoxy-2-oxo-1,3,4-thiadiazol-3(2*H*)-yl)methyl] *O,O*-dimethyl phosphorodithioate, in or on the commodity.

Commodity	Parts per million	Expiration/ revocation date
Kiwifruit	0.1	12/31/16
Longan	0.1	12/31/16
Starfruit	0.1	12/31/16
Sugar apple	0.2	12/31/16

* * * * *

8. Section 180.319 is revised to read as follows:

§ 180.319 Interim tolerances.

(a) *General.* While petitions for tolerances for negligible residues are pending and until action is completed on these petitions, interim tolerances are established for residues of the listed pesticide chemicals in or on the following raw agricultural commodities:

Substances	Uses	Tolerance in parts per million	Raw agricultural commodity	Expiration/ revocation date
Coordination product of zinc ion and maneb.	Fungicide	1.0 (Calculated as zinc ethylene-bisdithiocarbamate).	Potato	None.
Endothall (7-oxabicyclo-(2,2,1) heptane 2,3-dicarboxylic acid.	Herbicide	0.2	Beet, sugar	None.
Isopropyl carbanilate (IPC)	Herbicide	5.0	Alfalfa, hay; clover, hay; and grass, hay	None.
		2.0	Alfalfa, forage; clover, forage; and grass, forage	None.
		0.1	Flax, seed; lentil; lettuce, head; lettuce, leaf; pea; safflower, seed; spinach; beet, sugar, roots; and beet, sugar, tops.	None.

Substances	Uses	Tolerance in parts per million	Raw agricultural commodity	Expiration/ revocation date
		0.5	Egg; cattle, fat; cattle, meat; cattle, meat byproducts; goat, fat; goat, meat; goat, meat byproducts; hog, fat; hog, meat; hog, meat byproducts; horse, fat; horse, meat; horse, meat byproducts; milk; sheep, fat; sheep, meat; sheep, meat byproducts; poultry, fat; poultry, meat; and poultry, meat byproducts.	None.
Methyl parathion	Herbicide	0.5	Rye	12/31/13.

(b) *Section 18 emergency exemptions.* [Reserved]

(c) *Tolerances with regional registrations.* [Reserved]

(d) *Indirect or inadvertent residues.* [Reserved]

§ 180.342 [Amended]

9. Section 180.342 is amended by removing the entry for "lettuce" from table in paragraph (a)(1).

10. Section 180.497 is revised to read as follows:

§ 180.497 Clofencet; tolerances for residues.

(a) *General.* Tolerances are established for residues of the plant growth regulator (hybridizing agent) clofencet, including its metabolites and degradates, in or on the commodities in the table in this paragraph. Compliance with the tolerance levels specified in this paragraph is to be determined by measuring only clofencet, potassium 2-(4-chlorophenyl)-3-ethyl-2,5-dihydro-5-oxo-4-pyridazinecarboxylate, expressed as the free acid, in or on the commodity:

Commodity	Parts per million	Expiration/ revocation date
Cattle, fat	0.04	7/14/12
Cattle, kidney	10.0	7/14/12
Cattle, meat	0.15	7/14/12
Cattle, meat byproducts, except kidney	0.5	7/14/12
Egg	1.0	7/14/12
Goat, fat	0.04	7/14/12
Goat, kidney	10.0	7/14/12
Goat, meat	0.15	7/14/12
Goat, meat byproducts, except kidney	0.5	7/14/12
Hog, fat	0.04	7/14/12
Hog, kidney	10.0	7/14/12
Hog, meat	0.15	7/14/12
Hog, meat byproducts, except kidney	0.5	7/14/12
Horse, fat	0.04	7/14/12
Horse, kidney	10.0	7/14/12
Horse, meat	0.15	7/14/12
Horse, meat byproducts, except kidney	0.5	7/14/12
Milk	0.02	7/14/12
Poultry, fat	0.04	7/14/12
Poultry, meat	0.15	7/14/12
Poultry, meat byproducts	0.20	7/14/12
Sheep, fat	0.04	7/14/12
Sheep, kidney	10.0	7/14/12
Sheep, meat	0.15	7/14/12
Sheep, meat byproducts, except kidney	0.5	7/14/12
Wheat, forage	10.0	7/14/12
Wheat, grain	250.0	7/14/12
Wheat, hay	40.0	7/14/12
Wheat, straw	50.0	7/14/12

(b) *Section 18 emergency exemptions.* [Reserved]

(c) *Tolerances with regional registrations.* [Reserved]

(d) *Indirect or inadvertent residues.* Tolerances are established for indirect or inadvertent residues of the plant growth regulator (hybridizing agent) clofencet, including its metabolites and degradates, in or on the commodities in the table in this paragraph. Compliance with the tolerance levels specified in this paragraph is to be determined by measuring only clofencet, potassium 2-(4-chlorophenyl)-3-ethyl-2,5-dihydro-5-oxo-4-pyridazinecarboxylate, expressed as the free acid, in or on the commodity when present therein as a result of the application of clofencet to the growing crops in paragraph (a) of this section.

Commodity	Parts per million	Expiration/ revocation date
Grain, cereal, forage, fodder and straw, group 16, except rice, sweet corn, wheat, and wild rice; forage	4.0	7/14/12

Commodity	Parts per million	Expiration/ revocation date
Grain, cereal, forage, fodder and straw, group 16, except rice, sweet corn, wheat, and wild rice; hay	15.0	7/14/12
Grain, cereal, forage, fodder and straw, group 16, except rice, sweet corn, wheat, and wild rice; stover	1.0	7/14/12
Grain, cereal, forage, fodder and straw, group 16, except rice, sweet corn, wheat, and wild rice; straw	4.0	7/14/12
Grain, cereal group 15, except rice, sweet corn, wheat, and wild rice	20.0	7/14/12
Soybean	30.0	7/14/12
Soybean, forage	10.0	7/14/12
Soybean, hay	10.0	7/14/12

§ 180.558 [Removed]

11. Section 180.558 is removed.

[FR Doc. 2011–10553 Filed 5–3–11; 8:45 am]

BILLING CODE 6560–50–P

DEPARTMENT OF COMMERCE

National Oceanic and Atmospheric Administration

50 CFR Part 679

RIN 0648–XA209

Fisheries of the Exclusive Economic Zone Off Alaska; Bering Sea and Aleutian Islands King and Tanner Crabs

AGENCY: National Marine Fisheries Service (NMFS), National Oceanic and Atmospheric Administration (NOAA), Commerce.

ACTION: Notice of availability of fishery management plan amendments; request for comments.

SUMMARY: The North Pacific Fishery Management Council submitted Amendments 38 and 39 to the Fishery Management Plan for Bering Sea/ Aleutian Islands King and Tanner Crabs (FMP) to NMFS for review. If approved, Amendment 38 would establish a mechanism in the FMP to specify annual catch limits and accountability measures for each crab stock. This action is necessary to account for uncertainty in the overfishing limit and prevent overfishing. If approved, Amendment 39 would modify the snow crab rebuilding plan to define the stock as rebuilt the first year the stock biomass is above the level necessary to produce maximum sustainable yield. Amendments 38 and 39 are intended to promote the goals and objectives of the Magnuson-Stevens Fishery Conservation and Management Act, the FMP, and other applicable laws.

DATES: Written comments on the amendment must be received on or before 5 p.m., Alaska local time, on July 5, 2011.

ADDRESSES: You may submit comments, identified by RIN 0648–XA209, by any one of the following methods:

- *Electronic Submissions:* Submit all electronic public comments via the Federal eRulemaking Portal *http://www.regulations.gov.*
- *Fax:* (907) 586–7557, Attn: Ellen Sebastian
- *Mail:* P.O. Box 21668, Juneau, AK 99802.
- *Hand delivery to the Federal Building:* 709 West 9th Street, Room 420A, Juneau, AK.

Instructions: All comments received are a part of the public record and will generally be posted to *http://www.regulations.gov* without change. All Personal Identifying Information (for example, name, address) voluntarily submitted by the commenter may be publicly accessible. Do not submit Confidential Business Information or otherwise sensitive or protected information.

NMFS will accept anonymous comments (enter N/A in the required fields, if you wish to remain anonymous). You may submit attachments to electronic comments in Microsoft Word, Excel, WordPerfect, or Adobe PDF file formats only.

Electronic copies of Amendments 38 and 39 and the Environmental Assessment prepared for this action may be obtained from the Federal eRulemaking Portal *http://www.regulations.gov.*

FOR FURTHER INFORMATION CONTACT: Gretchen Harrington, 907–586–7228.

SUPPLEMENTARY INFORMATION: The Magnuson-Stevens Fishery Conservation and Management Act (Magnuson-Stevens Act) requires that each regional fishery management council submit any fishery management plan or fishery management plan amendment it prepares to NMFS for review and approval, disapproval, or partial approval by the Secretary of Commerce. The Magnuson-Stevens Act also requires that NMFS, upon receiving a fishery management plan amendment, immediately publish a notice in the **Federal Register** announcing that the amendment is available for public review and comment.

This notice announces that proposed Amendments 38 and 39 to the Fishery Management Plan for Bering Sea/ Aleutian Islands King and Tanner Crabs (FMP) are available for public review and comment. The crab fisheries in the exclusive economic zone of the Bering Sea and Aleutian Islands are managed under the FMP. The FMP was prepared by the North Pacific Fishery Management Council (Council) under the authority of the Magnuson-Stevens Act, 16 U.S.C. 1801 *et seq.* The FMP establishes a cooperative management regime that defers many aspects of crab fisheries management to the State of Alaska (State) with Federal oversight. State regulations are subject to the provisions of the FMP, and must be consistent with the Magnuson-Stevens Act and other applicable Federal laws.

The provisions of the Magnuson-Stevens Act, as amended in 2007, establish, either expressly or by logical extension, five basic requirements that relate to and require amendment of the FMP. The Guidelines for National Standard 1 of the Magnuson-Stevens Act (50 CFR 600.310; NS 1 Guidelines) provide guidance to regional fishery management councils about how to satisfy the obligations of the Magnuson-Stevens Act relative to the prevention of overfishing, achievement of optimum yield, and establishment of annual catch limits. The following is a summary of these five requirements.

(1) The FMP must provide for the specification of annual catch limits (ACLs) that will prevent overfishing.

(2) The FMP must establish an acceptable biological catch (ABC) control rule that accounts for relevant sources of scientific uncertainty.

(3) The Council's Scientific and Statistical Committee must provide the Council with scientific advice on the ABC control rule and periodic recommendations for specifying the ABC for each fishery.

(4) The FMP must establish accountability measures that prevent

exceeding the ACLs and to correct overages of the ACL if they do occur.

(5) The FMP must describe the maximum sustainable yield and assess and specify the optimum yield for the fishery.

The Council unanimously recommended Amendment 38 to explicitly address these five basic requirements while maintaining the FMP's cooperative management regime that relies on State expertise in collecting and analyzing scientific data on crab and in establishing the total allowable catches (TACs). In addition, by recommending this approach, the Council acknowledges that the precautionary approach that is currently employed by the State in setting TAC further reduces the risk of realizing overfishing by incorporating variable scientific information that cannot be quantified in a control rule.

Annual Catch Limits and Acceptable Biological Catch

Amendment 38 would establish ABC control rules in the FMP and set the ACL equal to the ABC. Annually, the ABC control rule would be used to set the maximum ABC for each crab stock below the overfishing level (OFL) set for that stock. This mechanism would ensure that, at the maximum ABC, the probability of overfishing is less than 50 percent.

The ABC control rules would be incorporated into the existing five-tier system used to set the OFLs. Annually, the Scientific and Statistical Committee assigns each crab stock to one of five tiers based on an evaluation of the reliable information available for that stock. No crab stocks have sufficient information to be in Tiers 1 or 2. Tier 3 stocks have sufficient information for the stock assessment model to estimate the biomass level and fishing rate necessary to achieve maximum sustainable yield. Tier 4 stocks have a stock assessment model that estimates biomass using the historical performance of the fishery and information from other stocks as necessary to estimate biological parameters. Tier 5 stocks have no reliable estimates of biomass and only historical catch data is available.

For crab stocks in Tiers 1 through 4, the ABC control rule would calculate a buffer below the OFL using a 49 percent probability that the ABC exceeds the true, but unknown, OFL (noted as $P^*=0.49$) and a probability distribution for the OFL. Scientific uncertainty would be incorporated into the ABC-setting process though the annual specification of the probability distribution for the OFL, which accounts for scientific uncertainty in the estimate of OFL and any other specified scientific uncertainty. The resulting ABC, and corresponding ACL, would be a total catch limit comprised of three catch components: (1) Non-directed fishery discard losses; (2) directed fishery discard losses; and (3) directed fishery retained catch. A discussion of this approach is provided in the Environmental Assessment (see **ADDRESSES**).

To better understand and incorporate scientific uncertainty, Amendment 38 would direct the Crab Plan Team and the Scientific and Statistical Committee to annually evaluate and make recommendations on (1) The specification of the probability distribution of the OFL, (2) the methods to appropriately quantify uncertainty in the OFL estimate for the ABC control rule, and (3) the factors influencing scientific uncertainty that the State would account for on an annual basis in TAC-setting. The end result would be to incorporate additional scientific uncertainty into the ABC control rule where possible while continuing to consider uncertainty in the TAC-setting process.

In developing this approach, the Council recognized that some scientific uncertainty relative to crab stock conditions is not applicable to the OFL setting process and is better addressed through the State TAC-setting process. This approach relies on the State to incorporate additional buffering to account for uncertainty through the annual TAC specification process and recognizes the State's role and expertise in crab research and management under the FMP. Additional uncertainty includes (1) management uncertainty (i.e., uncertainty in the ability of managers to constrain catch so the ACL is not exceeded and uncertainty in quantifying the true catch amount) and (2) scientific uncertainty identified and not already accounted for in the ABC. The State currently considers many factors that influence estimates of uncertainty in TAC-setting. The State also has the flexibility to use the expertise of its managers and biologists to be more conservative than existing harvest strategies as necessary to prevent overfishing and meet State management goals and Federal requirements. A discussion of the State's TAC-setting process is provided in the Environmental Assessment (see **ADDRESSES**).

For crab stocks in Tier 5, the ABC control rule would set the maximum ABC at 10 percent below the OFL. No annual consideration of uncertainty is required for Tier 5 stocks because scientific uncertainty in the OFL estimate is incorporated in the size of the buffer. The State would consider additional scientific uncertainty and management uncertainty in the TAC-setting process. For Tier 5 stocks where only retained catch information is available, the OFL and ABC would be set for the retained catch portion only. For Tier 5 stocks where information on bycatch mortality is available, the OFL and ABC calculations could include discard losses, at which point the OFL and ABC would be applied to the retained catch plus the discard losses from directed and non-directed fisheries.

Scientific and Statistical Committee

The Council's Scientific and Statistical Committee would annually establish the ABC for each crab stock through the following process. First, the stock assessment author would prepare the stock assessment and recommend a proposed OFL and an ABC (at or less than the maximum ABC). Next, the Crab Plan Team would review the stock assessment and make recommendations on the OFL and ABC. The Scientific and Statistical Committee would then review the stock assessment documents, recommendations from the Crab Plan Team, and methods for addressing scientific uncertainty, and set the final OFL and ABC for each stock. The Scientific and Statistical Committee may set an ABC lower than the maximum ABC calculated using the ABC control rule, but it must provide an explanation for why a lower ABC was set.

Accountability Measures

Amendment 38 would establish accountability measures to comply with the Magnuson-Stevens Act requirement that FMPs include accountability measures to prevent ACLs from being exceeded and to correct overages of the ACL if they do occur.

Accountability measures to prevent TACs from being exceeded, and to account for and minimize crab bycatch, are used in crab fishery management and would continue to be used to prevent ACLs from being exceeded. These accountability measures include: individual fishing quotas and the measures implemented under the Crab Rationalization Program to ensure that individual fishing quotas are not exceeded, measures to minimize crab bycatch in directed crab fisheries, and monitoring and catch accounting measures. These measures have been effective at preventing the TAC from being exceeded since the start of the Crab Rationalization Program in 2005.

Accountability measures in the ABC-setting process would include downward adjustments to the ABC in the fishing season after an ACL has been exceeded. If catch exceeds the ACL, a lower maximum ABC in the subsequent season would result because maximum ABC varies directly with biomass, except for Tier 5 stocks. For Tier 5 stocks, the information used to establish the ABC is insufficient to reliably estimate abundance or discern the existence or extent of biological consequences caused by exceeding the ACL. Consequently, the subsequent fishing season's maximum ABC would not automatically decrease. However, when the ACL for a Tier 5 stock has been exceeded, the Scientific and Statistical Committee may choose to recommend a decrease in the ABC for the subsequent fishing season as an accountability measure.

Given that the State sets the TAC, Amendment 38 also includes accountability measures for the State to exercise in the annual TAC-setting process. First, Amendment 38 would require that the State establish the annual TAC for each crab stock at a level sufficiently below the ACL so that the sum of the total catch (including all bycatch mortality and any uncertainty in bycatch estimates) and the State's assessment of additional uncertainty in the OFL estimate will not exceed the ACL. At the end of the fishing year, the total catch would be calculated and compared to the ACL.

Second, if an ACL is exceeded, the FMP would require that the State implement accountability measures to account for any biological consequences to the stock resulting from the overage through a downward adjustment to the TAC for that species in the following fishing season. Note that this TAC adjustment is in additional to the downward adjustment to the ABC in the ABC-setting process discussed previously. This accountability measure would be under the FMP's category 2, which means that the State has the discretion under the FMP to determine the most appropriate method to account for any catch above the ACL in setting the TAC for the subsequent fishing season.

The Council recognized that these accountability measures place the burden of accountability only on the directed crab fishery. Measures to minimize crab bycatch in the groundfish fisheries currently include prohibited species catch limits and area closures. The Council has initiated a comprehensive analysis of crab bycatch in the Bering Sea and Aleutian Islands groundfish fisheries to assess these existing crab protection measures and to determine whether changes or additional measures are necessary to further limit crab bycatch in the groundfish fisheries.

Optimum Yield

Amendment 38 would amend the FMP to establish an optimum yield range of 0 to less that the OFL catch. For crab stocks, the OFL is the annualized maximum sustainable yield (MSY) and is derived through the annual assessment process, under the framework of the tier system. Recognizing the relatively volatile reproductive potential of crab stocks, the cooperative management structure of the FMP, and the past practice of restricting or even prohibiting directed harvests of some stocks out of ecological considerations, this optimum yield range is intended to facilitate the achievement of the biological objectives and economic and social objectives of the FMP under a variety of future biological and ecological conditions. It enables the State to determine the appropriate TAC levels below the OFL to prevent overfishing or address other biological concerns that may affect the reproductive potential of a stock but that are not reflected in the OFL itself. The State establishes TACs at levels that maximize harvests, and associated economic and social benefits, when biological and ecological conditions warrant doing so.

Snow Crab Rebuilding Plan

Amendment 39 would modify the existing snow crab rebuilding plan to define "rebuilt" as the first year that the estimated biomass is above the level necessary to produce maximum sustainable yield, rather than the second consecutive year as currently defined. The Scientific and Statistical Committee recommended that a one year threshold is appropriate for snow crab based on the approved stock assessment model.

An Environmental Assessment was prepared for Amendments 38 and 39 that describes the management background, the purpose and need for action, the management alternatives, and the environmental, social, and economic impacts of the alternatives (see **ADDRESSES**).

Public comments are being solicited on proposed Amendments 38 and 39 to the FMP. NMFS will consider all public comments received by the end of the comment period in the approval/disapproval decision on Amendments 38 and 39. To be considered, comments must be received, not just postmarked or otherwise transmitted, by 5 p.m. Alaska local time on the last day of the comment period (see **DATES**). Comments received after that date will not be considered in the approval/disapproval decision on the amendments.

Authority: 16 U.S.C. 1801 *et seq.*

Dated: April 28, 2011.

Samuel D. Rauch III,

Deputy Assistant Administrator for Regulatory Programs, National Marine Fisheries Service.

[FR Doc. 2011–10798 Filed 5–3–11; 8:45 am]

BILLING CODE 3510–22–P

Notices

Federal Register

Vol. 76, No. 86

Wesnesday, May 4, 2011

This section of the FEDERAL REGISTER contains documents other than rules or proposed rules that are applicable to the public. Notices of hearings and investigations, committee meetings, agency decisions and rulings, delegations of authority, filing of petitions and applications and agency statements of organization and functions are examples of documents appearing in this section.

DEPARTMENT OF AGRICULTURE

Office of the Secretary

Solicitation of Members to the National Agricultural Research, Extension, Education, and Economics Advisory Board

AGENCY: Research, Education, and Economics, USDA.

ACTION: Solicitation for membership.

SUMMARY: The notice to announce the solicitation of members to the National Agricultural Research, Extension, Education, and Economics Advisory Board. The notice was published in the **Federal Register** on April 22, 2011. The document left out a phrase in the third paragraph of the **SUPPLEMENTARY INFORMATION** section.

FOR FURTHER INFORMATION CONTACT: J. Robert Burk, 202–720–3684.

Correction

In the **Federal Register** of April 22, 2011, in FR Doc. 2011–9638, on page 22667, in the **SUPPLEMENTARY INFORMATION** section, correct to read as follows:

Nominations are open to all individuals without regard to race, color, religion, sex, national origin, age, mental or physical handicap, marital status, or sexual orientation. To ensure that recommendations of the Advisory Board take into account the needs of the diverse groups served by the Department, membership shall include, to the extent practicable, individuals with demonstrated ability to represent all racial and ethnic groups, women and men, and person with disabilities.

Yvette Anderson,

Federal Register Liaison Officer for Agriculture Research Service.

[FR Doc. 2011–10915 Filed 5–3–11; 8:45 am]

BILLING CODE P

DEPARTMENT OF AGRICULTURE

Forest Service

Southwest Idaho Resource Advisory Committee

AGENCY: Forest Service, USDA.

ACTION: Notice of meeting.

SUMMARY: Pursuant to the authorities in the Federal Advisory Committee Act (Pub, L 92–463) and under the Secure Rural Schools and Community Self-Determination Act of 2000, as amended, (Pub. L 110–343), the Boise, Payette, Salmon-Challis, and Sawtooth National Forests' Southwest Idaho Resource Advisory Committee will conduct a business meeting. The meeting is open to the public.

DATES: Thursday, May 26, 2011, beginning at 9 a.m.

ADDRESSES: Valley County Emergency Operations Center, 108 Spring Street, Cascade, Idaho.

SUPPLEMENTARY INFORMATION: Agenda topics will include review and approval of project proposals for FY 2012 funding, and is an open public forum.

FOR FURTHER INFORMATION CONTACT: Kim Pierson, Designated Federal Official, at (208) 347–0301 or e-mail *kpierson@fs.fed.us.*

Dated: *April 27, 2011.*

Michael R. Williams,

Acting Forest Supervisor, Payette National Forest.

[FR Doc. 2011–10821 Filed 5–3–11; 8:45 am]

BILLING CODE 3410–11–P

DEPARTMENT OF AGRICULTURE

Forest Service

White Pine-Nye County Resource Advisory Committee

AGENCY: Forest Service, USDA.

ACTION: Notice of meetings.

SUMMARY: The White Pine-Nye County Resource Advisory Committee will meet in Eureka, Nevada. The committee is authorized under the Secure Rural Schools and Community Self-Determination Act (Pub. L. 110–343) (the Act) and operates in compliance with the Federal Advisory Committee Act. The purpose of the committee is to improve collaborative relationships and to provide advice and recommendations to the Forest Service concerning projects and funding consistent with the title II of the Act. The meeting is open to the public. The purpose of the meeting is to review and recommend funding allocation for proposed projects.

DATES: The meetings will be held May 26, 2011 and June 9, 2011, 9 a.m.

ADDRESSES: The meetings will be held at Eureka County Annex, 701 S. Main Street, Eureka, Nevada 89316. Written comments may be submitted as described under **SUPPLEMENTARY INFORMATION.**

All comments, including names and addresses when provided, are placed in the record and are available for public inspection and copying. The public may inspect comments received at Tonopah Ranger District Office, 1400 S. Erie Main Street, Tonopah, Nevada. Please call ahead to 775–482–6286 to facilitate entry into the building to view comments.

FOR FURTHER INFORMATION CONTACT: Jose Noriega, RAC Coordinator, Ely Ranger District, 825 Avenue E., Ely, Nevada 89301, 775–289–3031, e-mail *jnoriega@fs.fed.us.*

Individuals who use telecommunication devices for the deaf (TDD) may call the Federal Information Relay Service (FIRS) at 1–800–877–8339 between 8 a.m. and 8 p.m., Eastern Standard Time, Monday through Friday. Requests for reasonable accomodation for access to the facility or procedings may be made by contacting the person listed **FOR FURTHER INFORMATION CONTACT.**

SUPPLEMENTARY INFORMATION: *The following business will be conducted:* Review and approve previous meeting's minutes and business expenses, Recommend funding allocation for proposed projects, and Public Comment. *More information is available at: https://fsplaces.fs.fed.us/fsfiles/unit/wo/secure_rural_schools.nsf.* Anyone who would like to bring related matters to the attention of the committee may file written statements with the committee staff before or after the meeting. The agenda will include time for people to make oral statements of three minutes or less. Individuals wishing to make an oral statement should request in writing by May 23, 2011 to be scheduled on the agenda.

Written comments and requests for time for oral comments must be sent to

Tonopah Ranger District, P.O. Box 3940, Tonopah, Nevada 89049, or by e-mail to *lebernardi@fs.fed.us* or via facsimile to 775–482–3053.

Dated: April 26, 2011.

JoEllen Keil,

Deputy Forest Supervisor.

[FR Doc. 2011–10842 Filed 5–3–11; 8:45 am]

BILLING CODE 3410–11–P

DEPARTMENT OF AGRICULTURE

Forest Service

Alpine County Resource Advisory Committee

AGENCY: Forest Service, USDA.

ACTION: Notice of Meeting.

SUMMARY: The Alpine County Resource Advisory Committee (RAC) will meet in Markleeville, CA. The committee is authorized under the Secure Rural Schools and Community Self-Determination Act (Pub. L. 110–343) (the Act) and operates in compliance with the Federal Advisory Committee Act. The purpose of the committee is to improve collaborative relationships and to provide advice and recommendations to the Forest Service concerning projects and funding consistent with the title II of the Act. The meeting is open to the public. The purpose of the meeting is to review and recommend projects for year 3 and year 4 funding.

DATES: The meeting will be held on Tuesday May 24th, 2011, 6 p.m.

ADDRESSES: The meeting will be held in Alpine County at the Alpine Early Learning Center, 100 Foothill Road, Markleeville, CA 96120. Written comments may be submitted as described under **SUPPLEMENTARY INFORMATION.**

All comments, including names and addresses when provided, are placed in the record and are available for public inspection and copying. The public may inspect comments received at the Carson Ranger District Office, 1536 S. Carson Street, Carson City, NV 89701. Please call ahead to 775–884–8140 to facilitate entry into the building to view comments.

FOR FURTHER INFORMATION CONTACT: Daniel Morris, RAC Coordinator, USDA, Humboldt-Toiyabe National Forest, Carson Ranger District, 1536 S. Carson Street, Carson City, NV 89701 (775) 884–8140; e-mail *danielmorris@fs.fed.us.*

Individuals who use telecommunication devices for the deaf (TDD) may call the Federal Information Relay Service (FIRS) at 1–800–877–8339 between 8 a.m. and 8 p.m., Eastern Standard Time, Monday through Friday. Requests for reasonable accomodation for access to the facility or procedings may be made by contacting the person listed **FOR FURTHER INFORMATION CONTACT.**

SUPPLEMENTARY INFORMATION: *The following business will be conducted:* (1) Review and recommend funding allocation for proposed projects for 2010 and 2011 funding (2) Public Comment. Anyone who would like to bring related matters to the attention of the committee may file written statements with the committee staff before or after the meeting. The agenda will include time for people to make oral statements of three minutes or less. Individuals wishing to make an oral statement should request in writing by May 10th, 2011 to be scheduled on the agenda. Written comments and requests for time for oral comments must be sent to Daniel Morris, Alpine County RAC coordinator, 1536 S. Carson St. 89701, or by e-mail *danielmorris@fs.fed.us*, or via facsimile to 775–884–8199.

Dated: *April 22, 2011.*

Jeanne Higgins,

Forest Supervisor, Humboldt-Toiyabe National Forest.

[FR Doc. 2011–10843 Filed 5–3–11; 8:45 am]

BILLING CODE 3410–11–P

DEPARTMENT OF COMMERCE

Economic Development Administration

Notice of Petitions by Firms for Determination of Eligibility To Apply for Trade Adjustment Assistance

AGENCY: Economic Development Administration, Department of Commerce.

ACTION: Notice and Opportunity for Public Comment.

Pursuant to Section 251 of the Trade Act of 1974, as amended (19 U.S.C. 2341 *et seq.*), the Economic Development Administration (EDA) has received petitions for certification of eligibility to apply for Trade Adjustment Assistance from the firms listed below. Accordingly, EDA has initiated investigations to determine whether increased imports into the United States of articles like or directly competitive with those produced by each of these firms contributed importantly to the total or partial separation of the firm's workers, or threat thereof, and to a decrease in sales or production of each petitioning firm.

LIST OF PETITIONS RECEIVED BY EDA FOR CERTIFICATION OF ELIGIBILITY TO APPLY FOR TRADE ADJUSTMENT ASSISTANCE 4/15/2011 THROUGH 4/27/2011

Firm name	Address	Date accepted for investigation	Products
ABC School Equipment	1020 Railroad St., Corona, CA 92282.	21–Apr–11	The firm manufactures marker boards, chalkboards and tack boards for educational institutions.
Aerodyne Industries, LLC. dba Excaliber Precision Machining.	8737 N. 77th Dr., Peoria, AZ 85345.	20–Apr–11	The firm provides for precision machining production of aerospace and defense industry production parts.
Autoswage Products, Inc.	726 River Road, Shelton, CT 06484.	21–Apr–11	The firm manufactures pin shaped metal parts that are formed into shapes to meet specific customer requirements.
Consolidated Pine, Inc.	1951 NW Lamonta Road, Prineville, OR 97754.	19–Apr–11	The firm manufactures wood products and pine moldings.
Counterpart, Inc	214 32nd Avenue South, Brookings, SD 57006.	21–Apr–11	The firm manufactures industrial and commercial metal machinery parts and assemblies, specializing in custom machinery.
Herrick & White, Ltd.	3 Flat Street, Cumberland, RI 02864.	21–Apr–11	The firm manufactures architectural woodwork such as cabinets, moldings, doors, windows and ornamental furniture. They also manufacture free-standing and perimeter store fixtures.

LIST OF PETITIONS RECEIVED BY EDA FOR CERTIFICATION OF ELIGIBILITY TO APPLY FOR TRADE ADJUSTMENT ASSISTANCE 4/15/2011 THROUGH 4/27/2011—Continued

Firm name	Address	Date accepted for investigation	Products
Howard Tool Company, Inc	547 Odlin Road, Bangor, ME 04401.	21–Apr–11	The firm manufactures dies, tools, jigs, and fixtures.
Ultra Electronics Ocean Systems, Inc.	115 Bay State Drive, Braintree, MA 02184.	26–Apr–11	The firm manufactures acoustic countermeasures—electro-acoustic products used to decoy/confuse acoustic homing torpedoes, sonar transducers.

Any party having a substantial interest in these proceedings may request a public hearing on the matter. A written request for a hearing must be submitted to the Trade Adjustment Assistance for Firms Division, Room 7106, Economic Development Administration, U.S. Department of Commerce, Washington, DC 20230, no later than ten (10) calendar days following publication of this notice.

Please follow the requirements set forth in EDA's regulations at 13 CFR 315.9 for procedures to request a public hearing. The Catalog of Federal Domestic Assistance official number and title for the program under which these petitions are submitted is 11.313, Trade Adjustment Assistance for Firms.

Dated: April 26, 2011.

Bryan Borlik,

Director.

[FR Doc. 2011–10849 Filed 5–3–11; 8:45 am]

BILLING CODE 3510–WH–P

DEPARTMENT OF COMMERCE

Foreign-Trade Zones Board

[Docket 28–2011]

Foreign-Trade Zone 276—Kern County, CA; Application for Expansion

An application has been submitted to the Foreign-Trade Zones Board (the Board) by the County of Kern Department of Airports, grantee of FTZ 276, requesting authority to expand FTZ 276 to include a site in Shafter, California. The application was submitted pursuant to the provisions of the Foreign-Trade Zones Act, as amended (19 U.S.C. 81a–81u), and the regulations of the Board (15 CFR part 400). It was formally filed on April 28, 2011.

FTZ 276 was approved on January 19, 2010 (Board Order 1653, 75 F.R. 8920–8921, 02/26/2010). A site (Site 2) was transferred from FTZ 202 to FTZ 276 on December 20, 2011 (Board Order 1732, 76 FR 86–87, 01/03/2011). The zone currently consists of two sites (1,690 acres): *Site 1* (1,443 acres) is located at parcels within and adjacent to the Meadows Field Airport, Bakersfield (subject to the 230-acre activation limit indicated by the applicant in its original application); and, *Site 2* (247 acres) within the 1,450-acre Tejon Industrial complex, located at the intersection of Interstate 5 and Highway 99, Lebec.

The applicant is requesting authority to expand the zone to include a site in Kern County: Proposed Site 3 (564 acres)—International Trade and Transportation Center, 7th Standard Road and Santa Fe Highway, Shafter. The proposed site is currently designated as Site 3 under FTZ 202. The site will provide warehousing and distribution services to area businesses. No specific manufacturing authority is being requested at this time. Such requests would be made to the Board on a case-by-case basis.

In accordance with the Board's regulations, Christopher Kemp of the FTZ Staff is designated examiner to evaluate and analyze the facts and information presented in the application and case record and to report findings and recommendations to the Board.

Public comment is invited from interested parties. Submissions (original and 3 copies) shall be addressed to the Board's Executive Secretary at the address below. The closing period for their receipt is July 5, 2011. Rebuttal comments in response to material submitted during the foregoing period may be submitted during the subsequent 15-day period to July 18, 2011.

A copy of the application will be available for public inspection at the Office of the Executive Secretary, Foreign-Trade Zones Board, Room 2111, U.S. Department of Commerce, 1401 Constitution Avenue, NW., Washington, DC 20230–0002, and in the "Reading Room" section of the Board's Web site, which is accessible via *http://www.trade.gov/ftz.*

For further information, contact Christopher Kemp at *Christopher.Kemp@trade.gov* or (202) 482–0862.

Dated: April 28, 2011.

Andrew McGilvray,

Executive Secretary.

[FR Doc. 2011–10888 Filed 5–3–11; 8:45 am]

BILLING CODE P

DEPARTMENT OF COMMERCE

Foreign-Trade Zones Board

[Docket 30–2011]

Foreign-Trade Zone 141—Rochester, NY; Application for Manufacturing Authority, Firth Rixson, Inc. d/b/a Firth Rixson Monroe (Aircraft Turbine Components), Rochester, NY

A request has been submitted to the Foreign-Trade Zones Board (the Board) by Monroe County, New York, grantee of FTZ 141, requesting manufacturing authority on behalf of Firth Rixson, Inc. d/b/a Firth Rixson Monroe (Firth Rixson), to manufacture aircraft turbine components under FTZ procedures within FTZ 141. The application was submitted pursuant to the provisions of the Foreign-Trade Zones Act, as amended (19 U.S.C. 81a–81u), and the regulations of the Board (15 CFR part 400). It was formally filed on April 29, 2011.

The Firth Rixson facility (100 employees) is located at 181 McKee Road in Rochester and is situated within FTZ 141's proposed service area of Monroe County (see Docket 29–2011). The facility is used to produce aircraft turbine engine components of forged titanium, aluminum, and nickel alloy (HTSUS 7508.90.50, 7616.99.50, 8108.90.30), including forged rings for aircraft turbine engines for the U.S. market and export. The manufacturing process under FTZ procedures would involve machining, heat-treating, and forging of foreign-origin titanium (HTSUS 8108.20.00, duty rate—15%), aluminum alloy (7601.20.90, duty free) and nickel alloy (7502.20.00, duty free) (representing about 25% of the finished rings' value) into medium- and large-size rings (HTSUS 8411.91.90, 8411.99.90). The facility can produce up

to 3.3 million kilograms of finished rings annually.

FTZ procedures could exempt Firth Rixson from customs duty payments on foreign titanium used in export production. The company anticipates that some 54 percent of the plant's shipments will be exported. On its domestic sales, Firth Rixson would be able to choose the duty rate during customs entry procedures that applies to aircraft turbine engine components and forged rings of titanium (duty rates—free, 2.4%, 5.5%) for the foreign-origin titanium noted above. FTZ designation would further allow Firth Rixson to realize logistical benefits through the use of weekly customs entry procedures. Customs duties also could possibly be deferred or reduced on foreign status production equipment. Firth Rixson would also be exempt from duty payments on foreign inputs that become scrap during the production process. The application indicates that the savings from FTZ procedures would help improve the facility's international competitiveness.

In accordance with the Board's regulations, Pierre Duy of the FTZ Staff is designated examiner to evaluate and analyze the facts and information presented in the application and case record and to report findings and recommendations to the Board.

Public comment is invited from interested parties. Submissions (original and 3 copies) shall be addressed to the Board's Executive Secretary at the address below. The closing period for receipt of comments is July 5, 2011. Rebuttal comments in response to material submitted during the foregoing period may be submitted during the subsequent 15-day period to July 18, 2011.

A copy of the application will be available for public inspection at the Office of the Executive Secretary, Foreign-Trade Zones Board, Room 2111, U.S. Department of Commerce, 1401 Constitution Avenue, NW., Washington, DC 20230–0002, and in the "Reading Room" section of the Board's Web site, which is accessible via *http://www.trade.gov/ftz.*

For further information, contact Pierre Duy at *Pierre.Duy@trade.gov* or (202) 482–1378.

Dated: April 29, 2011.

Andrew McGilvray,

Executive Secretary.

[FR Doc. 2011–10885 Filed 5–3–11; 8:45 am]

BILLING CODE P

DEPARTMENT OF COMMERCE

Foreign-Trade Zones Board

[Docket 29–2011]

Foreign-Trade Zone 141—County of Monroe, New York; Application for Reorganization Under Alternative Site Framework

An application has been submitted to the Foreign-Trade Zones (FTZ) Board (the Board) by the County of Monroe, grantee of FTZ 141, requesting authority to reorganize the zone under the alternative site framework (ASF) adopted by the Board (74 FR 1170, 1/12/09 (correction 74 FR 3987, 1/22/09); 75 FR 71069–71070, 11/22/10). The ASF is an option for grantees for the establishment or reorganization of general-purpose zones and can permit significantly greater flexibility in the designation of new "usage-driven" FTZ sites for operators/users located within a grantee's "service area" in the context of the Board's standard 2,000-acre activation limit for a general-purpose zone project. The application was submitted pursuant to the Foreign-Trade Zones Act, as amended (19 U.S.C. 81a–81u), and the regulations of the Board (15 CFR part 400). It was formally filed on April 28, 2011.

FTZ 141 was approved by the Board on April 2, 1987 (Board Order 355, 52 FR 12219, 4/15/87) and expanded on April 23, 1996 (Board Order 813, 64 FR 20791, 05/08/96) and on June 9, 2005 (Board Order 1396, 70 FR 36116, 06/22/05).

The current zone project includes the following sites: *Site 1* (10 acres)—401 Pixley Road, Gates; *Site 2* (8 acres)—Monroe FTZ Operators, Inc. warehouse facilities, 39 Breck Street, Rochester; *Site 3* (14 acres)—10 Carriage Street, Honeoye Falls; *Site 4* (38 acres)—200 Carlson Road, Rochester; *Site 5* (5 acres)—Monroe FTZ Operators, Inc. warehouse facilities, 655–C Basket Road, Webster; *Site 6* (5 acres)—111 Commerce Drive, Rochester; *Site 7* (3 acres)—10 Thruway Park, West Henrietta; *Site 8* (2.2 acres)—1698 Lyell Avenue, Rochester; *Site 9* (0.6 acres)—Supply Chain Services warehouse, 847 West Avenue, Building 10, Rochester; *Site 10* (2 acres)—Liberty Precision Industries' warehouse complex, 3025 Winton Road South, Rochester; and, *Site 11* (314 acres)—Rochester Technology Park, 789 Elmgrove Road, Rochester.

The grantee's proposed service area under the ASF would be Monroe County, New York, as described in the application. If approved, the grantee would be able to serve sites throughout the service area based on companies' needs for FTZ designation. The proposed service area is within and adjacent to the Rochester Customs and Border Protection port of entry.

The applicant is requesting authority to reorganize its existing zone project under the ASF as follows: Sites 2, 5, and 9 would become "magnet" sites and Sites 1, 3, 4, 6, 7, 8, 10, and 11 would be removed. The applicant is also requesting approval of the following initial "usage-driven" site: Proposed Site 12 (7 acres), Firth Rixson Inc. d/b/a Firth Rixson Monroe, 181 McKee Road, Rochester.

In accordance with the Board's regulations, Kathleen Boyce of the FTZ Staff is designated examiner to evaluate and analyze the facts and information presented in the application and case record and to report findings and recommendations to the Board.

Public comment is invited from interested parties. Submissions (original and 3 copies) shall be addressed to the Board's Executive Secretary at the address below. The closing period for their receipt is July 5, 2011. Rebuttal comments in response to material submitted during the foregoing period may be submitted during the subsequent 15-day period to July 18, 2011.

A copy of the application will be available for public inspection at the Office of the Executive Secretary, Foreign-Trade Zones Board, Room 2111, U.S. Department of Commerce, 1401 Constitution Avenue NW., Washington, DC 20230–0002, and in the "Reading Room" section of the Board's Web site, which is accessible via *http://www.trade.gov/ftz.* For further information, contact Kathleen Boyce at *Kathleen.Boyce@trade.gov* or (202) 482–1346.

Dated: April 28, 2011.

Andrew McGilvray,

Executive Secretary.

[FR Doc. 2011–10887 Filed 5–3–11; 8:45 am]

BILLING CODE P

DEPARTMENT OF COMMERCE

International Trade Administration

[A–570–888]

Floor-Standing, Metal-Top Ironing Tables and Certain Parts Thereof From the People's Republic of China; Extension of Time Limit for Preliminary Results of Antidumping Duty Administrative Review

AGENCY: Import Administration, International Trade Administration, Department of Commerce.

DATES: *Effective Date:* May 4, 2011.

FOR FURTHER INFORMATION CONTACT: Michael J. Heaney or Robert James, AD/CVD Operations Office 7, Import Administration, International Trade Administration, U.S. Department of Commerce, 14th Street and Constitution Avenue NW., Washington, DC 20230; *telephone:* (202) 482–4475 or (202) 482–0649, respectively.

SUPPLEMENTARY INFORMATION:

Background

On September 29, 2010, the Department of Commerce (the Department) published in the **Federal Register** the initiation of administrative review of the antidumping duty order on floor-standing, metal top ironing tables and certain parts thereof from the People's Republic of China, covering the period of August 1, 2009, through July 31, 2010. *See Initiation of Antidumping and Countervailing Duty Administrative Reviews and Request for Revocation in Part,* 75 FR 60076 (September 29, 2010). The current deadline for the preliminary results of this review is May 3, 2011.

Extension of Time Limits for Preliminary Results of Review

Section 751(a)(3)(A) of the Tariff Act of 1930, as amended (the Act), requires that the Department complete the preliminary results of an administrative review within 245 days after the last day of the anniversary month of an order for which a review is requested. However, if it is not practicable to complete the review within this time period, section 751(a)(3)(A) of the Act allows the Department to extend the time limit for the preliminary results to a maximum of 365 days after the last day of the anniversary month of an order for which a review is requested.

The Department finds that it is not practicable to complete the preliminary results of this review within the original time frame because we require additional time to solicit and analyze complex data regarding steel inputs, factors of production and surrogate values. Thus, the Department finds it is not practicable to complete this review within the original time limit (i.e., May 3, 2011). Accordingly, the Department is extending the time limit for completion of the preliminary results of this administrative review by 120 days (*i.e.,* until August 31, 2011, in accordance with section 751(a)(3)(A) of the Act and 19 CFR 351.213(h)(2)). We intend to issue the final results no later than 120 days after publication of the preliminary results notice.

This extension is issued and published in accordance with sections 751(a)(3)(A) and 777(i) of the Act.

Dated: April 27, 2011.

Christian Marsh,

Deputy Assistant Secretary for Antidumping and Countervailing Duty Operations.

[FR Doc. 2011–10890 Filed 5–3–11; 8:45 am]

BILLING CODE 3510–DS–P

DEPARTMENT OF COMMERCE

International Trade Administration

Executive-Led Eurasian Trade Mission

AGENCY: International Trade Administration, Commerce.

ACTION: Update.

Mission Description

The United States Department of Commerce, International Trade Administration, U.S. and Foreign Commercial Service (CS) is organizing a Trade Mission to from June 20–24, 2011. This Executive led mission will include representatives from a variety of U.S. firms specializing in, but not limited to the following Industries:

- Oil and Gas
- Medical and Health Care
- Information and Communication Technologies (ICT)
- Environmental Technologies
- Shipping Transportation and Freight Forwarding

Mission participants will be introduced to international agents, distributors, and end-users whose capabilities and services are targeted to each participant's needs. This mission will contribute to National Export Initiative goals through increased sales of oil and gas equipment/services; information and communication technologies, medical and health care, environmental technologies, shipping transportation and freight forwarding, *etc.* in Turkey and Kazakhstan.

Participants will have an opportunity to meet with major international companies, integrated service providers, potential agents and distributors as well as potential public and private buyers in Istanbul and Ankara, Turkey and Almaty, Kazakhstan. The mission will include matchmaking meetings in different cities including site visits of commercial interest. We are targeting 15 U.S. company representatives responsible for their corporate activity in Eurasia.

Commercial Setting—Turkey

Turkey, the world's 17th largest economy, is a major consumer of oil and gas. Although oil and gas produced in Turkey currently meets only a small fraction of the country's demand, there are significant prospects offshore in the Black Sea, and onshore in the Thrace region of western Turkey, and the East and Southeast. Between 2002 and 2009, 747 wells were drilled. In 2009 alone, $716 million was spent for oil and gas exploration and production in Turkey. As of today, only 20% of onshore prospects and 1% of offshore prospects have been explored. Chevron and ExxonMobil announced important exploration efforts in 2009 and 2010 in the Western Black Sea Region. Companies offering technologies and services for exploration and production can also find a market in the geothermal sector: Turkey ranks No.1 in Europe and 7 in the world in terms of geothermal power potential.

Turkey is a crucial corridor between the energy-rich Caspian and Middle East and Europe. The planned 3,300 km NABUCCO natural gas pipeline will link Caspian and Middle Eastern suppliers through Turkey to Central Europe, and will create major opportunities for U.S. companies. The total capacity of the pipeline will be 25 to 31 BCMA. Estimated investment costs including financing costs for the entire pipeline system will be well over $10 billion. Other potential pipeline projects include Italy—Greece—Turkey Interconnector (ITGI) and Trans Adriatic Pipeline (TAP).

In addition to oil and gas exploration and production activities and pipelines, new refinery and petrochemical plants are planned over the next decade, with a projected increase of over 90% in refining capacity by 2019, to over 1.3 million BPD.

Turkey's oil and gas market provides excellent opportunities for U.S. companies within the following product areas:

1. Offshore and onshore oil and gas exploration and production equipment and services,
2. 2–D and 3–D Seismic equipment and engineering services,
3. Shale gas exploration and production equipment and services,
4. Horizontal Drilling equipment and services,
5. Petrochemical processing equipment and services,
6. Geothermal energy exploration and drilling equipment and engineering services,
7. Coal-bed methane production equipment and services,
8. Compressors, turbines, measuring meters, SCADA systems, and pumps for pipelines,
9. Pipeline construction equipment and engineering services,
10. Refinery processing equipment and refinery auxiliary units,
11. Oil and Gas Storage Systems.

Turkey has a population of approximately 75 million people and is a growing market for the medical products and services sectors. The Ministry of Health (MOH) is the largest provider of healthcare and the only public provider of preventive services in Turkey. At a national level, MOH is responsible for the country's health policy and health services. In fiscal year (FY) 2011, approximately $11.5 billion was allocated to the Turkish Ministry of Health (MOH) by the Government of Turkey (GOT). The MOH budget showed an increase of 40% year over year. A key driver behind Turkey's continued double-digit growth in health expenditure is the country's improved health insurance coverage. The implementation of state-funded health insurance for the lowest earners is expected to make a significant contribution to continued health expenditure growth over the next five years.

The construction of many private hospitals offers increased sales opportunities and less complicated procurement requirements compared to the confusing tender requirements used by government agencies. The Ministry of Health is also pursuing a number of Public Private Partnership (PPP) projects with Turkish and foreign companies to establish healthcare campuses, large medical complexes with several hospitals, labs and recreational areas, in large cities. These projects are also business opportunities for U.S. medical companies and healthcare service providers.

The Republic of Turkey has a number of private care facilities focused on cardiovascular care, OBGYN, orthopedics and minimally invasive outpatient ambulatory procedures. A number of private hospitals are procuring angio-cath, radiological equipment and advanced surgical and life support technologies. The procurement of air ambulances and diagnostic medical devices is also being considered. The MOH is working to establish a Council of Pharmaceuticals and Medical Devices, which will be independent from the MOH with the authority to regulate and control the medical equipment, pharmaceuticals, cosmetics market in Turkey.

Medical tourism is a new sector developing in Turkey. Increasingly, patients from Europe and the Middle East go to Turkey for medical treatment, as private healthcare is becoming more affordable. Turkey has become a popular destination for health care among these countries because most of the patients have already vacationed in Turkey and are comfortable with the country's infrastructure.

Currently, medical procedures in demand vary from simple procedures to fertility treatment, cosmetic surgery, and laser surgery. The most popular procedures are cosmetic and dental procedures, yet Turkey also has a good reputation in cardiology, ophthalmology, endocrinology, gastroenterology, rheumatology, nephrology, oncology, neurology, dermatology, gynecology/obstetrics, orthopedics, organ transplantation, and otolaryngology (ear, nose & throat). Some of these surgeries have long waiting lists in European countries, which is another reason why Turkey is an attractive country for medical procedures.

Turkey's health care market provides excellent opportunities for U.S. companies within the following product areas:

- Disposable products
- Advanced med/surgery equipment including angio-cath facilities
- Radiology and pathology
- Advanced diagnostics systems
- Optical devices
- Parts and components of medical devices
- Electronic instruments and appliances for physical and chemical analysis
- Vaccines
- Orthotic and prosthetic equipment
- OR/ER systems
- Dental equipment and devices

Turkey's Information Communication Technologies (ICT) market size is estimated to have reached $27.3 billion in 2010, with a breakdown of $20 billion in Telecommunications and 7.3 billion USD in Information Technologies. The Turkish ICT market continues its rise as one of the key growth markets in Turkey with an estimated growth of 8–10% for 2011, despite the economic global crisis.

Current PC penetration levels are estimated at 15%, but the Government aims for computer ownership at 51% and Internet usage at 48% by 2013. Meanwhile, a survey of Turkish primary and secondary schools showed that in 40% of schools, computers are still not integrated into education.

This is expected to significantly increase as the Ministry of Education plans to increase the number of computers and Internet connection. Schools in remote areas are to be connected to the net through satellite with the cooperation of the Turkish satellite company Turksat.

The consumer electronics market has significantly increased its share in the market. The consumer electronics market in Turkey is estimated at 3 billion USD. While the rest of the world averaged an increase of 10% in the consumer electronics market, Turkey averaged 35% annual growth in 2010.

In the Telecommunications market, Turk Telekom has 17.3 million fixed line subscribers, 6 million ADSL lines and 12.4 million GSM mobile subscribers through AVEA. Turk Telekom owns 99.9% of TTnet, Argela, Innova, Sebit, Sobee ve AssisTT companies. It also owns 81% of AVEA, one of the three GSM mobile operators in Turkey. Turk Telekom is the minority share of ALBtelecom in Albania. 55% of the shares of Turk Telekom belong to Ojer Telecom Inc. and 30% belongs to the Turkish Treasury. The remaining 15% is floated in the Istanbul Stock Exchange (IMKB). The value of Turk Telekom was over US $15 billion in 2010.

Turk Telekom will invest $3.42 billion thru 2010 for its Next Generation Network (NGN) project and will also replace its rural area switches with small telephone switches over 10,200 switch centers. Turk Telekom is in the process of introducing IP TV. Fixed line subscribers can now change their operators without changing their phone numbers as a result of the fixed line number portability regulation, which came into force in September 2009.

The three GSM cellular operators, Turkcell, Vodafone and AVEA and the fixed line operator Turk Telekom invested in equipment and services at a total value of $2–3 billion to expand their services. Turkcell has almost 36 million subscribers (56.6% of the total GSM cellular subscribers), Vodafone has 15 million (24.5% of the subscribers) and AVEA has 12 million almost 18.9% of the subscribers.

The total number of GSM cellular service subscribers reached almost to 64 million with an approximate penetration rate of almost 89%. The total telecom equipment and service market grew to $19.3 billion and is expected to expand in 2010 as the GSM sector is the driving force and the subscribers are expected to use more and more 3G services. Total number of 3G subscribers reached to almost 6 million while 2G subscribers decreased to 58 million. Fixed line subscribers are almost 17 million, reaching almost 100% penetration per house basis. Subscriber penetration for fix line is 23.5% and is not expected to increase anymore due to hard competition from the GSM cellular operators.

With the introduction of 3G last year; IPTV, online services, content and media services, E-business, personalized services, music download, games, multi-play, video services, and other mobile

entertainment, has been developing rapidly, creating new business areas and revenues. BTK (Turkish Telecom Authority) is expected to conduct tenders for WiMax licenses in 2011.

Over 40 private long distance telephone companies have been also operating over the last 5 years, mostly using VoIP via an interconnection agreement with Turk Telekom. Some of these companies have established or continue to establish their own network.

This attractive consumer electronics trend has lured many international and national electronic retail supermarkets. German Mediamarkt, British Electro World, Turkish Teknosa, Vatanbilgisayar and Gold Bilgisayar have been competing for a number of years in Turkey.

Turkey's ICT market provides excellent opportunities for U.S. companies within the following product areas:

- Consumer Electronics
- Notebook PC's
- Audio Visual Equipment
- Wireless equipment/services
- IPTV
- WiMax (awaiting law)
- VDSL
- 3G & 4G related technologies/services

Commercial Setting—Kazakhstan

Kazakhstan has the Caspian Sea region's largest recoverable crude oil reserves and accounts for approximately two-thirds of the roughly 1.8 million barrels per day (bpd) currently being produced in the region. The Government of Kazakhstan and foreign investors continue to focus heavily on the hydrocarbons sector, which so far has received approximately 60% of the estimated $58 billion in foreign direct investment in Kazakhstan since 1991, and makes up approximately 53% of its export revenue. Existing oil extraction sites offshore in the North Caspian, combined with onshore fields currently under development, mark Kazakhstan as a potentially major near-term oil exporter. Already its oil production has reached 1.4 million bpd, with daily output expected to total 2.6 million bpd by 2015. As a result, foreign investors are increasing their focus in its energy infrastructure, including oil transportation routes such as the Baku-Tbilisi-Ceyhan pipeline.

Oil industry sources estimate that Kazakhstan could eventually attract up to $140 billion of foreign investment in its oil infrastructure. Industry experts and the U.S. Commercial Service in Almaty estimate that the current market for oil and gas field equipment and services will grow to $7.5 billion in 2010, and will continue growing at 15–20% annually over the next three years. Kazakhstan as yet has no experience in offshore production and operations. This experience gap offers many opportunities for U.S. service companies in rig work, support infrastructure, and environmentally sensitive technologies. The Caspian Basin's oil-bearing formations are generally quite deep (15,000 feet), under considerable pressure, and often contain a high degree of sulfur and other contaminants, making special drilling and processing equipment necessary. Additionally, U.S. oil and gas field equipment suppliers have the potential for solid growth over the next decade as new fields are brought on-stream and secondary recovery methods are introduced to existing deposits.

Kazakhstan's oil and gas market provides excellent opportunities for U.S. companies within the following product areas:

1. Oil and Gas Well Development;
2. Field Operation;
3. Offshore Oil and Gas Exploration/Exploitation Equipment;
4. Gathering, Treatment, Transportation and Storage of Oil, Petrochemical Products and Natural Gas;
5. Pumps, Fittings and Valves;
6. Gas Detection and Monitoring Systems;
7. Oil and Gas Field Chemicals;
8. Pipeline Construction Equipment; and
9. Pipeline Corrosion Controls.

Healthcare Sector

The sustainable growth of Kazakhstan's economy during the past years is reflected in all sectors of the country's economy, including healthcare. Providing the population with quality healthcare services is one of the government's priority tasks. Around USD2.8 and USD2.5 billion were allocated for healthcare sector from the state budget in 2010 and 2011 respectively. Role of the government is very significant, 80% of healthcare institutions in Kazakhstan are state-owned thus the principal end-users of medical equipment are state-owned healthcare institutions. Every year the government spends approximately USD170–200 million for purchasing medical equipment. Local production is relatively insignificant. Local manufacturers produce basic medical equipment that do not require innovative technologies. Market demand for specific complex medical equipment is met entirely by imports which makes up 90% of total market.

The most demanded medical equipment and services include:

- Diagnostic equipment;
- Medical lasers;
- Endoscope;
- Surgery equipment.

The pharmaceutical market is one of the most stable markets in Kazakhstan and has not been significantly affected by the economic crisis. In 2009, its volume amounted to approximately $800 million with a 2% market growth. Local production is estimated as 12% of the total pharmaceutical market. According to statistics, government purchases in Kazakhstan in 2009 are estimated at $368.2 million. The share of local manufacturers in government purchases is estimated at 11.8%. State procurement in 2009 can be broken down into three categories as follows: Hospital purchases at 49%, ambulatory purchases at 30%, and centralized purchases made by the Ministry of Health at 21%. The population of Kazakhstan in 2009 was estimated at 16.2 million with 70.2% of the population aged between 15 and 65 years. Approximately 7.9% of the population is over 65 and 21.8% is under 15 years of age.

Based on market statistics, U.S. companies producing the following pharmaceutical products have strong prospects:

- Systemic antibacterials,
- Oncology medications,
- Antihemorrhagics,
- Anti-diabetic medications, and/or
- Vaccines,
- Blood substitutes and perfusion solutions.

Telecommunication Market

The telecommunications sector remains one of the most dynamic and fastest developing sectors in Kazakhstan's economy. The country's telecom revenues in 2009 amounted to $2.8 billion, a 8.3% increase from 2008.

The following segments make up the telecommunication market in Kazakhstan: Mobile communications, fixed line communications, Internet and Data Transmission, Radio and TV broadcasting.

The market breakdown in 2009:
Mobile Communications—52.8%
Fixed Line Communications—20.1%
Internet—8.5%
Data Transmission—2.2%
TV Broadcasting—3.1%
Other—13.4%

In 2005, the government of Kazakhstan adopted a law that sought to demonopolize and liberalize the telecommunications market. The program was aimed at decreasing the monopoly of Kazakhtelecom, Kazakhstan's leading telecom operator (and over 50% government owned). Its

main provision was to provide all operators equal access to the country's telecommunications network and to initiate a system of alternative operators of international and long-distance services (by abolishing Kazakhtelecom's exclusive license). In reality, the program has had little impact on Kazakhtelecom's dominance, as the firm still has a monopoly on telecommunication services, which has resulted in high tariffs for long distance and international phone communications and Internet access. There is a hope that Kazakhstan's goal to enter the World Trade Organization will positively impact the current situation in regards to market liberalization, as it will require the government to reexamine its regulatory oversight, which is currently fragmented.

Based on the government program on Development of the Telecommunication Sector, the best prospects for U.S. suppliers of the telecommunication equipment are:

- 3G telecommunication equipment (WiMAX);
- TV digital broadcasting equipment;
- Satellite telecommunication systems for providing Internet access and phone communication in remote areas;
- Equipment for digitization of the existing telecommunication networks including digital and/or interactive TV systems working on a frequency of 40 GHz and more.
- Equipment for DWDM technologies.

Mission Goals

The trade mission will assist representatives of American companies responsible for business activity in Eurasia with their efforts to identify profitable opportunities and new markets for their respective U.S. companies and to increase their export potential. The summary of results expected from the mission includes finding potential partners, agents and distributors, joint venture partners, and provide market knowledge for future expansion.

Mission Scenario

In Kazakhstan, mission members will be presented with a briefing by the U.S. Embassy's Commercial Officer, the sector specialists and other key Kazakh government and corporate officials. Participants will also take part in business matchmaking appointments with Kazakhstani private sector companies.

In Turkey, mission members will also be presented with a briefing by the U.S. Embassy's Commercial Officer, the Commercial Specialist for the various sectors represented and other key Turkish government and corporate officials. Participants will take part in business matchmaking appointments with Turkish private sector companies, which would be potential candidates for agent/representative or distributor. Depending on the availability, potential buyers may also be scheduled for meetings. The venue will be Ankara, the capital of Turkey where the public sector is headquartered and Istanbul where headquarters of most of the private sector is located.

U.S. participants will be counseled before and after the mission by the domestic mission coordinator. Participation in the mission will include the following:

- Pre-travel Webinars on subjects ranging from industry briefings to business practices in Turkey and Kazakhstan.
- Pre-scheduled meetings with potential partners, distributors, end users, or local industry contacts in Istanbul and Ankara, Turkey;
- Transportation to and from all airports and all mission-organized meetings, excluding air transport;
- Meetings with key Kazakh and Turkish Government decision makers and private sector firms;
- Participation in networking receptions in Turkey and Kazakhstan; and
- Meetings with CS Turkey's and CS Kazakhstan's sector specialists in Istanbul and Ankara, Turkey and Almaty, Kazakhstan.

Mission Timetable

Mission participants will arrive in Almaty, Kazakhstan on Sunday, June 19, 2011 and the mission program will take place from June 20–24, 2011. Departure to the United States or other onward destinations will be on Saturday, June 25, 2011.

Sunday, June 19, 2011

Almaty, Kazakhstan

- Arrival in Almaty, Kazakhstan

Day 1

Monday, June 20, 2011

Almaty, Kazakhstan

- Agenda Review and Market briefings by U.S. Embassy officials
- Matchmaking Meetings
- Networking Reception

Day 2

Tuesday, June 21, 2011

Almaty, Kazakhstan

- Possible Site Visit
- Matchmaking Meetings

Day 3

Wednesday, June 22, 2011

Istanbul, Turkey

- Morning departure to Istanbul
- Arrive Istanbul at noon
- Afternoon Embassy Briefing
- Industry Briefing
- Evening reception hosted by Consul General

Day 4

Thursday, June 23, 2011

Istanbul-Ankara, Turkey

- One-on-one matchmaking meetings with potential agents, distributors or partners
- Evening Departure to Ankara

Day 5

Friday, June 24, 2011

Ankara, Turkey

- 1–1 matchmaking meetings (afternoon)
- Sector briefings
- Evening Networking Reception at Ambassador's Residence

Day 6

Saturday, June 25, 2011

Ankara-Istanbul, Turkey

- Departure to Istanbul or to Europe for U.S. flights or weekend touristic site visits in Istanbul

Participation Requirements

All parties interested in participating in the Commercial Service Eurasian Trade Mission must complete and submit an application package for consideration by the Department of Commerce. All applicants will be evaluated on their ability to meet certain conditions and best satisfy the selection criteria as outlined below. A minimum of 15 and a maximum of 20 companies will be selected to participate in the mission from the applicant pool. U.S. companies already doing business with Turkey and Kazakhstan as well as U.S. companies seeking to enter these markets for the first time may apply.

Fees and Expenses

After a company has been selected to participate in the mission, a payment to the Department of Commerce in the form of a participation fee is required. Participation fee will be as follows:

SME [1] all stop cost: $3,160.

[1] An SME is defined as a firm with 500 or fewer employees or that otherwise qualifies as a small business under SBA regulations (see *http://www.sba.gov/services/contractingopportunities/sizestandardstopics/index.html*). Parent companies, affiliates, and subsidiaries will be considered when determining business size. The dual pricing reflects

Continued

Large company all stop cost: $4,585.

One country cost: At actual rate only upon request.

Expenses for travel, lodging, most meals, and incidentals will be the responsibility of each mission participant. Delegation members will be able to take advantage of Embassy rates for hotel rooms.

Conditions for Participation

- An applicant must submit a completed and signed mission application and supplemental application materials, including adequate information on the company's products
- And/or services, primary market objectives, and goals for participation. If the Department of Commerce receives an incomplete application, the Department may reject the application,
- Request additional information, or take the lack of information into account when evaluating the applications.
- Each applicant must also certify that the products and services it seeks to export through the mission are either produced in the United States, or, if not, marketed under the name of a U.S. firm and have at least 51 percent U.S. content of the value of the finished product or service.

Selection Criteria for Participation: Selection will be based on the following criteria:

- Suitability of the company's products or services to the Eurasian Region equipment and services market;
- Diversity of company size, type, location, demographics and traditional under representation in business in Turkey and Kazakhstan, including likelihood of exports resulting from the mission;
- Consistency of the applicant's goals and objectives with the stated scope of the mission. Referrals from political organizations and any documents containing references to partisan political activities (including political contributions) will be removed from an applicant's submission and not considered during the selection process.

Timeframe for Recruitment and Applications

Mission recruitment will be conducted in an open and public manner, including posting on the Commerce Department trade missions calendar—*http://www.ita.doc.gov/doctm/tmcal.html*—and other Internet Web sites, publication in domestic trade publications and association newsletters, direct outreach to internal clients and distribution lists, posting in the **Federal Register**, and announcements at industry meetings, symposia, conferences, and trade shows.

The Department of Commerce International Trade Administration (ITA) is amending the January 5, 2011 **Federal Register** Notice (76 FR 537, Jan. 5, 2011) announcing the executive-led Oil & Gas Equipment and Services Mission to Kazakhstan and Turkey from June 20–24, 2011 to extend the deadline from April 29, 2011 to May 7, 2011 for applications for representatives of U.S. firms to participate in the mission. Because of the need for participants to make flight arrangements and obtain visas, ITA will review applications and making participation decisions on a rolling basis starting April 29th. We will inform applicants of selection decisions as soon as possible after April 29, 2011. Applications received after May 6, 2011 will be considered only if space and scheduling constraints permit.

Interested individuals are encouraged to apply as soon as possible. Participation is limited to a maximum of 20 companies.

Contact Information

U.S. Commercial Service Domestic Contact

Brendan Kelly, Tel: 713–209–3113, E-mail: *brendan.kelly@trade.gov.*

Jessica Arnold, Tel: 202–482–1841, E-mail: *jessica.arnold@trade.gov.*

U.S. Commercial Service Almaty, Kazakhstan

Jennifer Kane, Senior Commercial Officer or Azhar Kadrzhanova, Commercial Specialist, U.S. Consulate General—Almaty, 41 Kazybek bi Street, Almaty 050010, Kazakhstan, Tel.: +7 (727) 250–7612, Fax: +7 (727) 250–0777, E-mail: *Jennifer.Kane@trade.gov .*

U.S. Commercial Service Ankara, Turkey

Michael Lally, Senior Commercial Officer or Serdar Cetinkaya, Senior Commercial Specialist, U.S. Embassy—Ankara, Tel: +90 (312) 457–7203, Fax: +90 (312) 457–7302, E-mail: *Michael.Lally@trade.gov.*

U.S. Commercial Service Istanbul, Turkey Gregory Taevs, Principal Commercial Officer, Tel: +90 (212) 335–9302, Fax: +90 (212) 335–9103, E-mail: Gregory.Taevs@trade.gov.

Elnora Moye,

Commercial Service Trade Mission Program, U.S. Department of Commerce.

[FR Doc. 2011–10784 Filed 5–3–11; 8:45 am]

BILLING CODE 3510–FP–P

the Commercial Service's user fee schedule that became effective May 1, 2008 (see *http://www.export.gov/newsletter/march2008/initiatives.html* for additional information).

DEPARTMENT OF COMMERCE

National Oceanic and Atmospheric Administration

Proposed Information Collection; Comment Request; Highly Migratory Species Vessel Logbooks and Coast-Earnings Data Reports

AGENCY: National Oceanic and Atmospheric Administration (NOAA), Commerce.

ACTION: Notice.

SUMMARY: The Department of Commerce, as part of its continuing effort to reduce paperwork and respondent burden, invites the general public and other Federal agencies to take this opportunity to comment on proposed and/or continuing information collections, as required by the Paperwork Reduction Act of 1995.

DATES: Written comments must be submitted on or before July 5, 2011.

ADDRESSES: Direct all written comments to Diana Hynek, Departmental Paperwork Clearance Officer, Department of Commerce, Room 6616, 14th and Constitution Avenue, NW., Washington, DC 20230 (or via the Internet at *dHynek@doc.gov*).

FOR FURTHER INFORMATION CONTACT: Requests for additional information or copies of the information collection instrument and instructions should be directed to Steve Durkee (202) 670–6637 (*Steve.Durkee@noaa.gov*), Jennifer Cudney (301) 713–2347 (*Jennifer.Cudney@noaa.gov*), or Margo Schulze-Haugen (301) 713–2347 (*Margo.Schulze-Haugen@noaa.gov*), Highly Migratory Species Management Division (F/SF1), Office of Sustainable Fisheries, NMFS, 1315 East-West Highway, Silver Spring, MD 20910.

SUPPLEMENTARY INFORMATION:

I. Abstract

This request is for renewal of a current information collection. Under the provisions of the Magnuson-Stevens Fishery Conservation and Management Act (16 U.S.C. 1801 *et seq.*), the National Oceanic and Atmospheric Administration's National Marine Fisheries Service (NMFS) is responsible for management of the nation's marine fisheries. In addition, NMFS must comply with the United States' obligations under the Atlantic Tunas Convention Act of 1975 (16 U.S.C. 971 *et seq.*), which implements the International Commission for the Conservation of Atlantic Tunas (ICCAT) recommendations. NMFS collects information via vessel logbooks to monitor the U.S. catch of Atlantic

swordfish, sharks, billfish, and tunas in relation to the quotas, thereby ensuring that the United States complies with its domestic and international obligations. HMS logbooks are verified using observer data that is collected under OMB Control No. 0648–0593 (Observer Programs' Information That Can Be Gathered Only Through Questions). In addition to HMS fisheries, the HMS logbook is also used to report catches of dolphin and wahoo by commercial and charter/headboat fisheries. The HMS logbooks collect data on incidental species, including sea turtles, which is necessary to evaluate the fisheries in terms of bycatch and encounters with protected species. For both directed and incidentally caught species, the information supplied through vessel logbooks also provides the catch and effort data on a per set or per trip level of resolution. These data are necessary to assess the status of highly migratory species, dolphin, and wahoo in each fishery. International stock assessments for tunas, swordfish, billfish, and some species of sharks are conducted and presented to the International Commission for the Conservation of Atlantic Tunas (ICCAT) periodically and provide, in part, the basis for ICCAT management recommendations which become binding on member nations. Domestic stock assessments for most species of sharks and for dolphin and wahoo are used as the basis of managing these species. The supplementary information on fishing costs and earnings has been collected via this vessel logbook program. This economic information enables NMFS to assess the economic impacts of regulatory programs on small businesses and fishing communities, consistent with the National Environmental Policy Act (NEPA), Executive Order 12866, the Regulatory Flexibility Act, and other domestic laws.

II. Method of Collection

Logbook entries are mailed.

III. Data

OMB Control Number: 0648–0371.

Form Number: NOAA Form 88–191.

Type of Review: Regular submission (renewal of a current information collection).

Affected Public: Business or other for-profit (vessel owners).

Estimated Number of Respondents: 11,496.

Estimated Time per Response: 10 minutes for cost/earnings summaries attached to logbook reports, 30 minutes for annual expenditure forms, 12 minutes for logbook catch reports, 2 minutes for negative logbook catch reports.

Estimated Total Annual Burden Hours: 31,360.

Estimated Total Annual Cost to Public: $0.

IV. Request for Comments

Comments are invited on: (a) Whether the proposed collection of information is necessary for the proper performance of the functions of the agency, including whether the information shall have practical utility; (b) the accuracy of the agency's estimate of the burden (including hours and cost) of the proposed collection of information;

(c) ways to enhance the quality, utility, and clarity of the information to be collected; and (d) ways to minimize the burden of the collection of information on respondents, including through the use of automated collection techniques or other forms of information technology.

Comments submitted in response to this notice will be summarized and/or included in the request for OMB approval of this information collection; they also will become a matter of public record.

Dated: April 29, 2011.

Gwellnar Banks,

Management Analyst, Office of the Chief Information Officer.

[FR Doc. 2011–10814 Filed 5–3–11; 8:45 am]

BILLING CODE 3510–22–P

DEPARTMENT OF COMMERCE

National Oceanic and Atmospheric Administration

RIN 0648–XA410

Incidental Take Permit and Habitat Conservation Plan for PacifiCorp Klamath Hydroelectric Project Interim Operations

AGENCY: National Marine Fisheries Service (NMFS), National Oceanic and Atmospheric Administration (NOAA), Commerce.

ACTION: Notice of availability of draft environmental assessment, habitat conservation plan, implementing agreement, and receipt of application; notice of public meeting.

SUMMARY: This notice announces that PacifiCorp Energy (PacifiCorp or applicant) has submitted to the National Marine Fisheries Service (NMFS) an application for an incidental take permit under the Endangered Species Act of 1973, as amended (ESA), for a 10-year period. As required by the ESA, PacifiCorp has also prepared a Habitat Conservation Plan (Plan) as part of the application. The application and Plan address potential incidental take of one ESA-listed species as a result of operation and maintenance of the Klamath Hydroelectric Project (Project) in and near the Klamath River in Southern Oregon and Northern California and implementation of the Plan during a 10-year period. This notice also announces the availability of a draft Environmental Assessment (EA) related to the requested permit, the proposed Plan, and the corresponding Implementing Agreement (IA) for public review and comment.

DATES: Written comments on the draft EA, Plan, and IA, must be received by 5 p.m. Pacific Time, on July 5, 2011.

ADDRESSES: Written comments concerning the draft EA, Plan, and IA should be sent by U.S. Mail, facsimile, or e-mail to Lisa Roberts, Fisheries Biologist, NMFS Northern California Office, 1655 Heindon Road, Arcata, CA 95521, facsimile (707) 825–4840, or you may transmit your comment as an attachment to the following e-mail address: *PacifiCorpHCP.SWR@noaa.gov.*

A public meeting will be held on June 29, 2011, from 6 p.m. to 9 p.m. at the Hilton Garden Inn, 5050 Bechelli Lane, Redding, CA, Phone: (530) 226–5111.

Copies of the draft EA, HCP and IA are available electronically for review on the NMFS Southwest Region Web site at: *http://swr.nmfs.noaa.gov/nepa.htm.* Copies of these documents are also available for public review during regular business hours from 9 a.m. to 5 p.m. at the NMFS Northern California Office, 1655 Heindon Road, Arcata, CA 95521 (707) 825–5178. Individuals wishing copies of the draft EA, Plan, or IA should contact NMFS by telephone (see **FOR FURTHER INFORMATION CONTACT**) or by letter (see **ADDRESSES**).

FOR FURTHER INFORMATION CONTACT: Lisa Roberts, Fisheries Biologist, NMFS, telephone (707) 825–5178.

SUPPLEMENTARY INFORMATION:

Background

Section 9 of the ESA and related Federal regulations prohibit the take of fish and wildlife species listed as endangered or threatened (16 U.S.C. 1538). The term "take'" means to harass, harm, pursue, hunt, shoot, wound, kill, trap, capture, or collect, or to attempt to engage in any such conduct (16 U.S.C. 1532). NMFS further defines harm as an act which actually kills or injures fish or wildlife, which includes significant habitat modification or degradation which actually kills or injures fish or wildlife by significantly impairing essential behavior patterns, including

breeding, spawning, rearing, migrating, feeding or sheltering (50 CFR 222.102). Under limited circumstances pursuant to section 10(a)(1)(B) of the ESA (16 U.S.C. 1539(a)(1)(B)), NMFS may issue permits to authorize incidental take of listed fish or wildlife; i.e., take that is incidental to, and not the purpose of, otherwise lawful activity. Regulations governing incidental take permits for threatened and endangered species under NMFS' jurisdiction are found at 50 CFR 222.307.

NMFS has received an application from PacifiCorp Energy (PacificCorp or Applicant) for an incidental take permit (Permit) for operation and maintenance of the Klamath Hydroelectric Project (Project) and implementation of the Plan for a 10-year period. The application was prepared and submitted by the Applicant, the owner and operator of the Project. The Applicant has requested incidental take permit coverage from NMFS for the Southern Oregon/Northern California Coast Evolutionarily Significant Unit of coho salmon *Oncorhynchus kisutch.* The Applicant has prepared the Plan to satisfy the application requirements for an incidental take permit under section 10(a)(1)(B) of the ESA.

The area covered by the Permit would include the Applicant's existing facilities and the adjacent water and land areas potentially influenced by Project maintenance and operations, including the mainstem Klamath River and reservoirs from Link River dam at the outlet of Upper Klamath Lake in Southern Oregon down to the estuary in Northern California, inclusive.

Project facilities at Iron Gate dam in Northern California, which is the Project dam furthest downstream on the Klamath River, do not include fish passage structures. Thus, anadromous fish passage, including passage of listed coho salmon, is currently blocked at Iron Gate dam. Subject to certain conditions and a pending determination in March 2012 by the Secretary of the Interior, the Klamath Hydroelectric Settlement Agreement (KHSA; for more information about the KHSA, see *http://klamathrestoration.gov*) anticipates that four Project dams on the Klamath River (Iron Gate, Copco No. 1, Copco No. 2, and J.C. Boyle) will be removed by December 31, 2020, to accomplish volitional fish passage for listed coho salmon and other species. The removal of the dams envisioned in the KHSA modifies an earlier proposal by PacifiCorp to the Federal Energy Regulatory Commission (FERC) to relicense and continue to operate the Project for 50 years. If the dams are not removed under the KHSA or the KHSA terminates for any other reason, the Project would revert to the FERC relicensing proceedings. NMFS has prescribed mandatory fishways, which FERC must include as conditions of any new license for operation of the Project, in the FERC relicensing process. These fishways would provide volitional fish passage for listed coho salmon and other species. Therefore, the requested 10-year period of the Permit is consistent with the expectation that there would be volitional fish passage under either dam removal pursuant to the KHSA or FERC's issuance of a new license for the Project by approximately the end of 2020, and volitional fish passage under either of these processes will provide substantial benefits to coho salmon and other anadromous fish species at the completion of the interim term of the Permit.

NMFS is now considering whether to issue an incidental take permit for the interim operation and maintenance of the Klamath Hydroelectric Project during the interim period described above. Issuance of the incidental take permit by NMFS would be contingent on the implementation of the Plan and adherence to any permit conditions. The Plan that PacifiCorp included with its application for a Permit includes a series of conservation measures to minimize and mitigate the effects of operation of the Project on potential incidental take of listed coho salmon during the interim period described above, including a turbine venting system at Iron Gate Dam; coordinated participation in flow variability and flow ramp rate measures at Iron Gate Dam; placement of large woody debris downstream of Iron Gate Dam; funding fish disease research to benefit coho salmon; and a fund that would be used to implement various projects designed to benefit coho salmon by enhancing habitat conditions in the Klamath River and tributaries downstream of Iron Gate Dam.

National Environmental Policy Act Compliance

Proposed permit issuance triggers the need for compliance with the National Environmental Policy Act of 1969, as amended (NEPA). NMFS has prepared a draft EA which evaluates the impacts of the proposed issuance of the Permit and implementation of the Plan, as well as the No Action Alternative in which the Permit would not be issued and the Plan would not be implemented. Copies of the draft EA are available for review as described earlier in the **ADDRESSES** section of this document.

Public Comments Solicited

NMFS invites the public to comment on the Plan, IA, and draft EA as described above in the **ADDRESSES** section during a 60-day public comment period described above in the **DATES** section. All comments and materials received, including names and addresses, will become part of the administrative record and may be released to the public. This notice is provided pursuant to section 10(c) of the ESA (16 U.S.C. 1539(c)) and regulations for implementing NEPA (40 CFR 1506.6). We provide this notice in order to allow the public, agencies, or other organizations to review and comment on these documents. The final NEPA determinations will not be made until after the 60-day public comment period has ended and after NMFS has fully considered all relevant comments received during the comment period.

Special Accommodations

The public meeting is physically accessible to people with disabilities. Requests for sign language interpretation or other auxiliary aids should be directed to Lisa Roberts, NMFS, at (707) 825–5178, at least 5 working days prior to the public meeting date.

Next Steps

NMFS will evaluate the application, associated documents, and public comments submitted to prepare final decision documents.

Dated: April 28, 2011.

Angela Somma,

Chief, Endangered Species Division, Office of Protected Resources, National Marine Fisheries Service.

[FR Doc. 2011–10902 Filed 5–3–11; 8:45 am]

BILLING CODE 3510–22–P

DEPARTMENT OF COMMERCE

National Oceanic and Atmospheric Administration

[File No. 15510]

RIN 0648–XA165

Marine Mammals

AGENCY: National Marine Fisheries Service (NMFS), National Oceanic and Atmospheric Administration (NOAA), Commerce.

ACTION: Notice; issuance of permit.

SUMMARY: Notice is hereby given that Jennifer Burns, Ph.D., University of Alaska Anchorage, Biology Department, 3101 Science Circle, Anchorage, AK, has been issued a permit to conduct

scientific research on marine mammal parts.

ADDRESSES: The permit and related documents are available for review upon written request or by appointment in the following offices:

Permits, Conservation and Education Division, Office of Protected Resources, NMFS, 1315 East-West Highway, Room 13705, Silver Spring, MD 20910; phone (301) 713–2289; fax (301) 713–0376; and

Alaska Region, NMFS, P.O. Box 21668, Juneau, AK 99802–1668; phone (907) 586–7221; fax (907) 586–7249.

FOR FURTHER INFORMATION CONTACT: Amy Sloan or Laura Morse, (301) 713–2289.

SUPPLEMENTARY INFORMATION: On January 24, 2011, notice was published in the **Federal Register** (76 FR 4091) that Dr. Burns had requested a permit to collect/receive, import, and export marine mammal parts for scientific research studies. The requested permit has been issued under the authority of the Marine Mammal Protection Act of 1972, as amended (16 U.S.C. 1361 et seq.), the regulations governing the taking and importing of marine mammals (50 CFR part 216), the Endangered Species Act of 1973, as amended (ESA; 16 U.S.C. 1531 *et seq.*), the regulations governing the taking, importing, and exporting of endangered and threatened species (50 CFR parts 222–226), and the Fur Seal Act of 1966, as amended (16 U.S.C. 1151 *et seq.*).

Permit No. 15510 authorizes Dr. Burns to conduct physiology studies on development, thermoregulation, muscle performance, oxygen stores, and hormonal and other regulatory processes using marine mammal parts. Annually, Dr. Burns can obtain samples from up to 50 animals of each of the following species: Harp seal, *Pagophilus groenlandica;* hooded seal, *Cystophora cristata;* gray seal, *Halichoerus grypus;* bearded seal, *Erignathus barbatus;* ringed seal, *Phoca hispida;* harbor seal, *Phoca vitulina;* spotted seal, *Phoca largha;* and ribbon seal, *Histriophoca fasciata,* and; to import samples annually from up to 6 captive Northern fur seals, *Callorhinus ursinus;* and 6 captive Steller Sea lions, *Eumetopias jubatus.* Samples may be from subsistence-harvested animals in Alaska, and other scientific and/or subsistence collections including but not limited to the national waters of Canada, Norway, the United Kingdom, and in international waters. Samples may be collected, received nationally, and imported and exported worldwide over a five-year period for laboratory analysis to support the research objectives.

In compliance with the National Environmental Policy Act of 1969 (42 U.S.C. 4321 *et seq.*), a final determination has been made that the activity proposed is categorically excluded from the requirement to prepare an environmental assessment or environmental impact statement.

As required by the ESA, issuance of this permit was based on a finding that such permit: (1) Was applied for in good faith; (2) will not operate to the disadvantage of such endangered species; and (3) is consistent with the purposes and policies set forth in section 2 of the ESA.

Dated: April 25, 2011.

P. Michael Payne,

Chief, Permits, Conservation and Education Division, Office of Protected Resources, National Marine Fisheries Service.

[FR Doc. 2011–10797 Filed 5–3–11; 8:45 am]

BILLING CODE 3510–22–P

DEPARTMENT OF COMMERCE

National Oceanic and Atmospheric Administration

National Climate Assessment and Development Advisory Committee (NCADAC)

AGENCY: Office of Oceanic and Atmospheric Research (OAR), National Oceanic and Atmospheric Administration (NOAA), Department of Commerce (DOC).

ACTION: Notice of open public meeting.

SUMMARY: This notice sets forth the schedule and proposed agenda of a forthcoming meeting of the DOC NOAA National Climate Assessment and Development Advisory Committee (NCADAC).

The members will discuss and provide advice on issues outlined below.

Date and Time: The meeting is scheduled for: Friday, May 20, from 1–5 p.m. Eastern Time.

ADDRESSES: Conference call. Public access will be available at a location to be determined. Please check the National Climate Assessment Web site for this information at *http://www.globalchange.gov/what-we-do/assessment.*

FOR FURTHER INFORMATION CONTACT: Dr. Cynthia Decker, Designated Federal Official, National Climate Assessment and Development Advisory Board, NOAA, Rm. 11230, 1315 East-West Highway, Silver Spring, Maryland 20910. (*Phone:* 301–734–1156, *Fax:* 301–713–1459, *E-mail: Cynthia.decker@noaa.gov.*)

SUPPLEMENTARY INFORMATION: The National Climate Assessment and Development Advisory Committee were established in December 2010. The committee's mission is to synthesize and summarize the science and information pertaining to current and future impacts of climate change upon the United States; and to provide advice and recommendations toward the development of an ongoing, sustainable national assessment of global change impacts and adaptation and mitigation strategies for the Nation. Within the scope of its mission, the committee's specific objective is to produce a National Climate Assessment.

Matters To Be Considered

Consideration of white papers provided by ad hoc working groups on the subjects of:

1. The National Climate Assessment Interim Strategy, the NCA Draft Outline, and Federal Activities.
2. Engagement Strategy and Requests for Information.
3. Scenarios and Regional Summaries.
4. Peer Review, Data Management and Development of a NCA Portal.

STATUS: The meeting will be open to public participation at a location to be determined with a 10-minute public comment period from 4:45–4:55 p.m. The NCADAC expects that public statements presented at its meetings will not be repetitive of previously submitted verbal or written statements. In general, each individual or group making a verbal presentation will be limited to a total time of two minutes. Written comments should be received in the NCADAC DFO's office by May 16, 2011 to provide sufficient time for NCADAC review. Written comments received by the NCADAC DFO after May 16, 2011, will be distributed to the NCADAC, but may not be reviewed prior to the meeting date.

Dated: April 28, 2011.

Mark E. Brown,

Chief Financial Officer/Chief Administrative Officer, Office of Oceanic and Atmospheric Research, National Oceanic and Atmospheric Administration.

[FR Doc. 2011–10896 Filed 5–3–11; 8:45 am]

BILLING CODE 3510–KD–P

COMMODITY FUTURES TRADING COMMISSION

Agricultural Advisory Committee; Meeting

AGENCY: Commodity Futures Trading Commission ("CFTC").

ACTION: Notice of Meeting of Agricultural Advisory Committee.

SUMMARY: The CFTC's Agricultural Advisory Committee will hold a public meeting on May 19, 2011, from 9 a.m. to 1 p.m., at the Commission's Washington, DC, headquarters. At the meeting the committee will discuss issues related to the Dodd-Frank Act. Members of the public may file written statements with the committee.

DATES: The meeting will be held on May 19, 2011 from 9 a.m. to 1 p.m.

ADDRESSES: The meeting will take place in the first floor Conference Center at the Commission's headquarters, Three Lafayette Centre, 1155 21st Street, NW., Washington, DC 20581. Written statements should be sent to the attention of Agricultural Advisory Committee, c/o Chairman Michael V. Dunn, Commodity Futures Trading Commission, Three Lafayette Centre, 1155 21st Street, NW., Washington, DC 20581.

FOR FURTHER INFORMATION CONTACT: Nicole McNair at (202) 418–5070.

SUPPLEMENTARY INFORMATION: The meeting is open to the public. The meeting will be webcast on the Commission's Web site, *http://www.cftc.gov.* Members of the public also can listen to the meeting by telephone. The public access call-in numbers will be announced at a later date.

Authority: 5 U.S.C. app. 2 § 10(a)(2).

Dated: April 29, 2011.

By the Commission.

David A. Stawick,

Secretary of the Commission.

[FR Doc. 2011–10961 Filed 5–3–11; 8:45 am]

BILLING CODE 6351–01–P

DEPARTMENT OF DEFENSE

Department of the Army

Notice of Intent To Grant a Partially Exclusive Patent License to videoNEXT Network Solutions, Inc.

AGENCY: Department of the Army, DoD.

ACTION: Notice of Intent.

SUMMARY: In compliance with 37 CFR 404 *et seq.,* the Department of the Army hereby gives notice of its intent to grant to videoNEXT Network Solutions, Inc., a corporation having its principle place of business at 3852 Dulles South Court, Unit I, Chantilly, VA 20151, a partially exclusive license relative to U.S. Patent No. 7,460,689 B1, issued on Dec. 2, 2008 entitled, "System and Method of Detecting, Recognizing, and Tracking Moving Targets"; Inventor: Alex Lipchen Chan.

DATES: Anyone wishing to object to the grant of this license must file written objections along with supporting evidence, if any, not later than 15 days from the date of this notice.

ADDRESSES: Send written objections to Michael D. Rausa, U.S. Army Research Laboratory, Office of Research and Technology Applications, *Attn:* RDRL–DB/Bldg. 434, Aberdeen Proving Ground, MD 21005–5425.

FOR FURTHER INFORMATION CONTACT: Michael D. Rausa, telephone (410) 278–5028.

SUPPLEMENTARY INFORMATION: None.

Brenda S. Bowen,

Army Federal Register Liaison Officer.

[FR Doc. 2011–10866 Filed 5–3–11; 8:45 am]

BILLING CODE 3710–08–P

DEPARTMENT OF DEFENSE

Department of the Army, Corps of Engineers

Intent To Prepare an Environmental Impact Statement for the Zoar Levee and Diversion Dam, Dam Safety Modification Study, Tuscarawas County, OH

AGENCY: Department of the Army, U.S. Army Corps of Engineers, DoD.

ACTION: Notice of intent.

SUMMARY: Pursuant to the National Environmental Policy Act (NEPA), the U.S. Army Corps of Engineers (Corps), Huntington District will prepare an Environmental Impact Statement (EIS) to disclose potential impacts to the natural, physical, and human environment resulting from implementation of alternatives formulated to address reliability risks associated with Zoar Levee and Diversion Dam. These high hazard structures do not meet current performance standards and exceed acceptable risk levels. A full array of alternatives will be formulated to meet the purpose and need of this study. After full consideration of all alternatives, the best plan will be selected to achieve acceptable risk levels.

DATES: A public scoping meeting will be held on May 24, 2011 from 7–10 p.m.

ADDRESSES: a. Address all written comments and suggestions concerning this proposed project to Aaron O. Smith, CELRH–PM–PD–R, U.S. Army Corps of Engineers, Huntington District, 502 Eighth Street, Huntington, WV, 25701–2070. Telephone: 304–399–5720. E-mail: *zoarlevee@usace.army.mil.* Requests to be placed on the mailing list should also be sent to this address.

b. The public scoping meeting location is: Tuscarawas Valley High School, 2637 Tuscarawas Valley Road, NE., Zoarville, OH 44656.

FOR FURTHER INFORMATION CONTACT: Ms. Jami Buchanan, U.S. Army Corps of Engineers, Huntington District, 502 Eighth Street, Huntington, WV, 25701–2070. Telephone: (304)399–5347. E-mail: *zoarlevee@usace.army.mil.*

SUPPLEMENTARY INFORMATION:

1. Authority: Investigation and justification of modifications for dam safety modifications at completed Corps of Engineers projects is authorized under Section 2033 of the Water Resources Development Act of 2007 (Pub. L. 110–114).

2. Background: a. Guidance for this study is provided in USACE Engineer Regulation 1110–2–1156 that addresses safety of dams.

b. Zoar Levee and Diversion Dam is an appurtenant structure to Dover Dam which is located in Tuscarawas County along the Tuscarawas River approximately 3.5 miles north of the communities of Dover and New Philadelphia. The dam was constructed by the Corps and completed in 1938. Dover Dam is a dry dam and as such does not hold a permanent pool. The Federal government maintains a permanent flowage easement to elevation 916′ above mean sea level (msl) upstream of the dam, which corresponds to the height of the spillway of the dam.

c. The Zoar Levee was constructed in 1937 with a crest elevation of 919′ above msl, which provided three feet of freeboard over the Dover Dam spillway crest of elevation 916′ above msl. The crest elevation of Zoar Levee was raised from elevation 919′ above msl to elevation 928.5′ above msl in 1951. There are approximately 54 properties (approximately 98 buildings including dependencies) located inside the levee at or below the elevation 916′ above msl. Water reaches the levee only when Dover Dam is retaining sufficient flood waters.

d. Zoar Diversion Dam was also constructed in 1937. It is located on Goose Run, approximately 1,000′ upstream of Zoar Levee and was built to control interior drainage within the levee. The Diversion Dam acts as a retention structure for runoff from the Goose Run watershed and redirects flows into a ponding area controlled by the Zoar Levee pump station.

e. There are three separable components associated with the

project—the western reach and rock knoll, which combine to form the full levee, and the diversion dam. Each of these components will require a separate "fix" to achieve the tolerable risk guidelines established in Chapter 5 of ER 1110–2–1156, under which this study is being conducted. Therefore, structural measures are being developed for each component that would address the risk associated with that specific piece of the project.

d. Additionally, as per guidance provided in Section 2033 of WRDA 2007, ER 1110–2–1156 and ER 1105–2–100, non-structural measures are also being developed for the project including breaching the levee and/or diversion dam.

f. The cultural and historical significance of the Village of Zoar is well documented. The Village of Zoar is unique in the State of Ohio, being the only physically remaining intact utopian community and a significant collection of early nineteenth century German folk architecture. Much of Zoar was documented in 1936 by the Historic American Building Survey (HABS). This study concluded that Zoar was "the most successful communist experiment ever conducted in the United States" (HABS 1936).

g. The EIS and Dam Safety Modification Report will consider the structural integrity of the levee and dam, their ability to accommodate flood waters as well as transportation, noise, terrestrial, aquatic, economic, environmental justice and cultural resource issues associated with the performance of the levee and dam.

3. Public Participation: a. The Corps of Engineers will conduct a public scoping meeting (see **DATES** and **ADDRESSES**) to gain input from interested agencies, organizations, and the general public concerning the content of the EIS, issues and impacts to be addressed in the EIS, and alternatives that should be analyzed.

b. The Corps invites full public participation to promote open communication and better decision-making. All persons and organizations that have an interest in the Zoar Levee and Diversion Dam, Dam Safety Modification Study and the environment are urged to participate in this NEPA evaluation process. Assistance will be provided upon request to anyone having difficulty with learning how to participate.

c. Public comments are welcomed anytime throughout the NEPA process. Formal opportunities for public participation include: (1) Public meetings to be held in or near the Village of Zoar; (2) Anytime during the NEPA process via mail, telephone or e-mail; (3) During Review and Comment on the Draft EIS; and (4) Review of the Final EIS. Schedules and locations will be announced in local news media. Interested parties should submit contact information to be included on the mailing list for public distribution of meeting announcements and documents (See **ADDRESSES**).

4. Schedule: The Draft Environmental Impact Statement is scheduled to be released for public review and comment in September 2012. The Final Report and Final EIS are scheduled to be completed in January 2013.

Brenda S. Bowen,

Army Federal Register Liaison Officer.

[FR Doc. 2011–10867 Filed 5–3–11; 8:45 am]

BILLING CODE 3720–58–P

DEPARTMENT OF EDUCATION

Applications for New Awards; Technology and Media Services for Individuals With Disabilities—Captioned and Described Educational Media

AGENCY: Special Education and Rehabilitative Services, Department of Education.

ACTION: Notice.

Overview Information

Technology and Media Services for Individuals With Disabilities—Captioned and Described Educational Media

Notice inviting applications for new awards for fiscal year (FY) 2011.

Catalog of Federal Domestic Assistance (CFDA) Number: 84.327N.

DATES: *Applications Available:* May 4, 2011.

Deadline for Transmittal of Applications: June 20, 2011.

Deadline for Intergovernmental Review: August 17, 2011.

Full Text of Announcement

I. Funding Opportunity Description

Purpose of Program: The purposes of the Technology and Media Services for Individuals with Disabilities program are to: (1) Improve results for children with disabilities by promoting the development, demonstration, and use of technology; (2) support educational media services activities designed to be of educational value in the classroom setting to children with disabilities; and (3) provide support for captioning and video description that are appropriate for use in the classroom setting.

Priority: In accordance with 34 CFR 75.105(b)(2)(v), this priority is from allowable activities specified in the statute, or otherwise authorized in the statute (see sections 674(c) and 681(d) of the Individuals with Disabilities Education Act (IDEA)).

Absolute Priority: For FY 2011 and any subsequent year in which we make awards from the list of unfunded applicants from this competition, this priority is an absolute priority. Under 34 CFR 75.105(c)(3) we consider only applications that meet this priority.

This priority is:

Technology and Media Services for Individuals With Disabilities—Captioned and Described Educational Media

Background

Section 674(c) of the IDEA requires, in part, that the Secretary of Education support video description, open captioning, or closed captioning that is appropriate for use in the classroom setting, of (a) television programs; (b) videos; and (c) other materials, including programs and materials associated with new and emerging technologies.

Recent developments in education policy and practice and advancements in technology have significant implications for supporting video description and captioning that are appropriate for use in the classroom setting. New and emerging technologies (such as video streaming, digital video recording, digital image processing, and other forms of multimedia) are becoming a more integral part of instructional practice and are replacing older, more expensive, and less adaptable media sources, such as compact discs (CDs) and digital video discs (DVDs). However, multimedia and other new and emerging technologies are usually not accessible to students who have hearing or vision impairments because only a small percentage of educational multimedia used in the classroom is captioned or described. For example, a recent survey of the top 35 educational media producers/distributors in the United States revealed that only slightly more than 25 percent of educational media is captioned by media producers/distributors and less than five percent of educational media is described (Described and Captioned Media Program, 2008). Federal requirements for captioning and video description do not apply to many forms of educational media, even with the expansion of these requirements included in the recently-enacted Twenty-First Century

Communications and Video Accessibility Act of 2010. This priority will help to ensure that the captioning and description services funded under this priority keep pace with advancements in new and emerging technologies so that instructional content that is delivered using new and emerging technologies is accessible to students, including English learners, who have hearing or vision impairments.

In addition, this priority will address the critical need to ensure that all students receive high-quality instruction in the academic subjects of science, technology, engineering, and mathematics (STEM). STEM-related television programs, videos, and other materials must be accessible to students who have hearing or vision impairments if they are to participate in, and benefit from, effective STEM instruction. This priority will help to ensure that STEM-related television programs, videos, new and emerging multimedia technologies, and other materials are accessible to students, including English learners, who have hearing or vision impairments.

Priority

The purpose of this priority is to fund a cooperative agreement to support the establishment and operation of an Accessible Learning Center (Center) that will oversee the selection, acquisition, closed captioning, video description, and distribution of free educational media through a loan service for eligible users who we are defining as students, including English learners, in early learning and kindergarten through grade 12 (K–12) classroom settings, who have hearing or vision impairments, and individuals, such as teachers and paraprofessionals who are directly involved in early learning or K–12 classroom instruction. The Center will develop procedures to be used in identifying educational media that meet the curricular needs of students, including English learners, in early learning and K–12 classroom settings; make arrangements for the media to be screened, purchased, captioned, and described; and establish strategies for distributing and making the media available to eligible users. Some of the activities and procedures must focus on selecting titles geared toward improving early learning outcomes for young children who have hearing or vision impairments and using technologies such as video streaming and other forms of multimedia to reach children with hearing or vision impairments in rural and high-need schools.

To be considered for funding under this priority, the applicant must meet the application requirements contained in this priority. The project funded under this absolute priority also must meet the programmatic and administrative requirements specified in the priority.

Application Requirements. An applicant must include in its application—

(a) A logic model that depicts, at a minimum, the goals, activities, outputs, and outcomes of the proposed project. A logic model communicates how a project will achieve its outcomes and provides a framework for both the formative and summative evaluations of the project;

Note: The following Web sites provide more information on logic models: *http://www.researchutilization.org/matrix/logicmodel_resource3c.html* and *http://www.tadnet.org/model_and_performance.*

(b) A plan to implement the activities described in the *Project Activities* section of this priority;

(c) A plan, linked to the proposed project's logic model, for a formative evaluation of the proposed project's activities. The plan must describe how the formative evaluation will use clear performance objectives to ensure continuous improvement in the operation of the proposed project, including objective measures of progress in implementing the project and ensuring the quality of products and services;

(d) A budget for attendance at the following:

(1) A one and one half day kick-off meeting to be held in Washington, DC, within four weeks after receipt of the award, and an annual planning meeting held in Washington, DC, with the Office of Special Education Programs (OSEP) Project Officer during each subsequent year of the project period.

(2) A three-day Project Directors' Conference in Washington, DC, during each year of the project period.

(3) A two-day trip annually to attend Department briefings, Department-sponsored conferences, and other meetings, as requested by OSEP; and

(e) A line item in the proposed budget for an annual set-aside of five percent of the annual grant amount to support emerging needs that are consistent with the proposed project's activities, as those needs are identified in consultation with OSEP.

Note: With approval from the OSEP Project Officer, the Center must reallocate any remaining funds from this annual set-aside no later than the end of the third quarter of each budget period.

Project Activities. To meet the requirements of this priority, the Center, at a minimum, must conduct the following activities:

(a) Develop strategies and procedures for identifying educational media in early learning programs and elementary and secondary schools that are not accessible to students, including English learners, who have hearing or vision impairments and that meet the curricular needs of those students;

(b) Select and obtain media from license-holders for screening. Once the media have been screened by Center staff, select items that have been judged by Center staff to closely match the curricular needs of students identified under paragraph (a) of this priority by taking into account the media most commonly used in school districts and early learning programs across the nation that are not currently captioned or described;

(c) Make arrangements with producers and distributors for the Center to purchase, closed caption, describe, and distribute selected media, including distribution in alternate formats, such as video streaming. Provide closed captioned and described master copies to producers and distributors so that they can make these accessible copies available to interested parties beyond the eligible users who will be served under this program;

(d) For selected media purchased, prepare closed captions and descriptions according to the guidelines referenced in paragraph (e) for closed captioned and described media and taking into account the grade level of the material, as well as the age and vocabulary level of the likely target audience. Materials to be captioned or described must include materials in STEM fields;

(e) To help ensure that closed captioning and description service providers keep up with new and emerging technologies and produce quality closed captioned or described products, revise or improve existing guidelines for closed captioning and video description that are currently used by closed captioning and description service providers. Existing guidelines include the "Captioning Key: Guidelines and Preferred Techniques," developed by the Described and Captioned Media Program (DCMP) and the "Description Key: Guidelines for the Description of Educational Media," developed through a partnership between DCMP and the American Federation for the Blind (AFB) in 2008. These guidelines can be viewed at: *http://www.dcmp.org/captioningkey/*

and *http://www.dcmp.org/descriptionkey,* respectively.

(f) Develop and implement quality control standards and procedures for checking media after it has been closed captioned and described;

(g) Prepare up to 150 copies of each media purchased for distribution through the electronic distribution system described in paragraph (h). These copies must be made available for loan free of charge to eligible users. Twenty-five percent of the media acquired annually also must be closed captioned and described in Spanish so that Spanish speakers who are learning English and who have hearing or vision impairments have access to the media;

(h) Develop a plan for implementing and operating an electronic distribution system for online ordering from the loan service. The distribution system must be computerized and allow electronic ordering;

(i) Identify and, as appropriate, utilize alternate delivery methods and vehicles for the loan service, as new and emerging technologies become available for classroom use;

(j) Establish and make available computerized registration and application procedures, accessible via the Internet, that will be used to register eligible users for the loan service, schedule the delivery of captioned and described media material, and track and record consumer feedback and usage information;

(k) Prepare, update, and distribute a catalog listing all closed captioned and described media available under this project as they become available. The catalog must be made available online;

(l) Maintain a Web site that meets government or industry-recognized standards for accessibility and that links to the Web site operated by the OSEP-funded Technical Assistance Coordination Center (TACC);

(m) Establish and maintain an advisory group of seven members, which shall meet annually, and include video producers and distributors, closed captioning and description service providers, parents and families of students with hearing or vision impairments, and public and private school administrators, and other educational personnel. This advisory group must develop an evaluation plan; provide input regarding the usefulness of program activities and services; review the effectiveness of the Center's media acquisition, captioning, description, and distribution; and make recommendations to ensure maximum effectiveness, including recommendations relating to the selection of media to be closed captioned and described based on input from consumers;

(n) Develop and maintain a comprehensive database containing information related to the availability of closed captioned and described educational media; information regarding the closed captioned and described media loan service; requirements governing the use of closed captioned and described media in the grantee's collection; and closed captioning and description service providers. In addition, the project shall maintain a clearinghouse of information on the subject of closed captioning and description for use by consumers, agencies, corporations, businesses, schools, and other interested stakeholders. All information must be accessible via the Internet;

(o) Develop strategies and use technologies for improving the Center's productivity by replacing older, more expensive, and less adaptable methods of captioning and describing videos;

(p) Upgrade technologies used by the Center for captioning and describing selected educational media as newer technologies emerge;

(q) Select media that are intended to improve early learning outcomes for young children who have hearing or vision impairments; and

(r) Use technologies such as video streaming and other forms of multimedia to reach students with hearing and vision impairments attending rural and high-need schools.

Fourth and Fifth Years of the Project

In deciding whether to continue this project for the fourth and fifth years, we will consider the requirements of 34 CFR 75.253(a), and in addition—

(a) The recommendation of a review team consisting of experts selected by the Secretary. This review will be conducted during a one-day intensive meeting in Washington, DC, that will be held during the last half of the second year of the project period. The Center must budget for travel expenses associated with this one-day intensive review;

(b) The timeliness and effectiveness with which all requirements of the negotiated cooperative agreement have been or are being met by the Center; and

(c) The quality, relevance, and usefulness of the Center's activities and products and the degree to which the Center's activities and products have contributed to an increased number of available accessible educational media for students with hearing or vision impairments.

References

Described and Captioned Media Program (2008). Educational Media Producers & Accessibility Survey Results (Fact Sheet), Spartanburg, SC. Retrieved from *http://www.dcmp.org/caai/nadh226.pdf.*

Waiver of Proposed Rulemaking: Under the Administrative Procedure Act (APA) (5 U.S.C. 553) the Department generally offers interested parties the opportunity to comment on proposed priorities and requirements. Section 681(d) of IDEA, however, makes the public comment requirements of the APA inapplicable to the priority in this notice.

Program Authority: 20 U.S.C. 1474 and 1481(d).

Applicable Regulations: The Education Department General Administrative Regulations (EDGAR) in 34 CFR parts 74, 75, 77, 79, 80, 81, 82, 84, 85, 86, 97, 98, and 99.

Note: The regulations in 34 CFR part 79 apply to all applicants except Federally recognized Indian Tribes.

Note: The regulations in 34 CFR part 86 apply to institutions of higher education (IHEs) only.

II. Award Information

Type of Award: Cooperative agreement.

Estimated Available Funds: $1,500,000.

Contingent upon the availability of funds and the quality of applications, we may make additional awards in FY 2012 from the list of unfunded applicants from the competition.

Maximum Award: We will reject any application that proposes a budget exceeding $1,500,000 for a single budget period of 12 months. The Assistant Secretary for Special Education and Rehabilitative Services may change the maximum amount through a notice published in the **Federal Register**.

Number of Awards: 1.

Note: The Department is not bound by any estimates in this notice.

Project Period: Up to 60 months.

III. Eligibility Information

1. *Eligible Applicants:* State educational agencies (SEAs); local educational agencies (LEAs), including public charter schools that are considered LEAs under State law; IHEs; other public agencies; private nonprofit organizations; outlying areas; freely associated States; Indian Tribes or Tribal organizations; and for-profit organizations.

2. *Cost Sharing or Matching:* This competition does not require cost sharing or matching.

3. *Other: General Requirements*—(a) The projects funded under this competition must make positive efforts to employ and advance in employment qualified individuals with disabilities (see section 606 of IDEA).

(b) Applicants and grant recipients funded under this competition must involve individuals with disabilities or parents of individuals with disabilities ages birth through 26 in planning, implementing, and evaluating the project (see section 682(a)(1)(A) of IDEA).

IV. Application and Submission Information

1. *Address to Request Application Package:* You can obtain an application package via the Internet, from the Education Publications Center (ED Pubs), or from the program office.

To obtain a copy via the Internet, use the following address: *http://www.ed.gov/fund/grant/apply/grantapps/index.html.* To obtain a copy from ED Pubs, write, fax, or call the following: ED Pubs, U.S. Department of Education, P.O. Box 22207, Alexandria, VA 22304. Telephone, toll free: 1–877–433–7827. FAX: (703) 605–6794. If you use a telecommunications device for the deaf (TDD), call, toll free: 1–877–576–7734.

You can contact ED Pubs at its Web site, also: *http://www.EDPubs.gov* or at its e-mail address: *edpubs@inet.ed.gov.*

If you request an application package from ED Pubs, be sure to identify this competition as follows: CFDA number 84.327N.

To obtain a copy from the program office, contact the person listed under **FOR FURTHER INFORMATION CONTACT** in section VII of this notice.

Individuals with disabilities can obtain a copy of the application package in an accessible format (*e.g.,* braille, large print, audiotape, or computer diskette) by contacting the person or team listed under *Accessible Format* in section VIII of this notice.

2. *Content and Form of Application Submission:* Requirements concerning the content of an application, together with the forms you must submit, are in the application package for this competition.

Page Limit: The application narrative (Part III of the application) is where you, the applicant, address the selection criteria that reviewers use to evaluate your application. You must limit Part III to the equivalent of no more than 50 pages, using the following standards:

- A "page" is 8.5″ × 11″, on one side only, with 1″ margins at the top, bottom, and both sides.
- Double space (no more than three lines per vertical inch) all text in the application narrative, including titles, headings, footnotes, quotations, references, and captions.
- Use a font that is either 12 point or larger or no smaller than 10 pitch (characters per inch).
- Use one of the following fonts: Times New Roman, Courier, Courier New, or Arial. An application submitted in any other font (including Times Roman or Arial Narrow) will not be accepted.

The page limit does not apply to Part I, the cover sheet; Part II, the budget section, including the narrative budget justification; Part IV, the assurances and certifications; or the one-page abstract, the resumes, the bibliography, the references, or the letters of support. However, the page limit does apply to all of the application narrative section (Part III).

We will reject your application if you exceed the page limit; or if you apply other standards and exceed the equivalent of the page limit.

3. *Submission Dates and Times:*

Applications Available: May 4, 2011.

Deadline for Transmittal of Applications: June 20, 2011.

Applications for grants under this competition may be submitted electronically using the Grants.gov Apply site (Grants.gov), or in paper format by mail or hand delivery. For information (including dates and times) about how to submit your application electronically, or in paper format by mail or hand delivery, please refer to section IV. 7.

Other Submission Requirements of this notice.

We do not consider an application that does not comply with the deadline requirements.

Individuals with disabilities who need an accommodation or auxiliary aid in connection with the application process should contact the person listed under **FOR FURTHER INFORMATION CONTACT** in section VII of this notice. If the Department provides an accommodation or auxiliary aid to an individual with a disability in connection with the application process, the individual's application remains subject to all other requirements and limitations in this notice. Deadline for Intergovernmental Review: August 17, 2011.

4. *Intergovernmental Review:* This program is subject to Executive Order 12372 and the regulations in 34 CFR part 79. Information about Intergovernmental Review of Federal Programs under Executive Order 12372 is in the application package for this competition.

5. *Funding Restrictions:* We reference regulations outlining funding restrictions in the *Applicable Regulations* section of this notice.

6. *Data Universal Numbering System Number, Taxpayer Identification Number, and Central Contractor Registry:* To do business with the Department of Education, you must—

a. Have a Data Universal Numbering System (DUNS) number and a Taxpayer Identification Number (TIN);

b. Register both your DUNS number and TIN with the Central Contractor Registry (CCR), the Government's primary registrant database;

c. Provide your DUNS number and TIN on your application; and

d. Maintain an active CCR registration with current information while your application is under review by the Department and, if you are awarded a grant, during the project period.

You can obtain a DUNS number from Dun and Bradstreet. A DUNS number can be created within one business day.

If you are a corporate entity, agency, institution, or organization, you can obtain a TIN from the Internal Revenue Service. If you are an individual, you can obtain a TIN from the Internal Revenue Service or the Social Security Administration. If you need a new TIN, please allow 2–5 weeks for your TIN to become active.

The CCR registration process may take five or more business days to complete. If you are currently registered with the CCR, you may not need to make any changes. However, please make certain that the TIN associated with your DUNS number is correct. Also note that you will need to update your CCR registration on an annual basis. This may take three or more business days to complete.

In addition, if you are submitting your application via Grants.gov, you must (1) be designated by your organization as an Authorized Organization Representative (AOR); and (2) register yourself with Grants.gov as an AOR. Details on these steps are outlined in the Grants.gov 3-Step Registration Guide (see *http://www.grants.gov/section910/Grants.govRegistrationBrochure.pdf*).

7. *Other Submission Requirements:* Applications for grants under this competition may be submitted electronically or in paper format by mail or hand delivery.

a. Electronic Submission of Applications

We are participating as a partner in the Governmentwide Grants.gov Apply site. The Captioned and Described Educational Media competition, CFDA number 84.327N, is included in this project. We request your participation in Grants.gov.

If you choose to submit your application electronically, you must use the Governmentwide Grants.gov Apply site at *http://www.Grants.gov.* Through this site, you will be able to download a copy of the application package, complete it offline, and then upload and submit your application. You may not e-mail an electronic copy of a grant application to us.

You may access the electronic grant application for the Captioned and Described Educational Media competition at www.Grants.gov. You must search for the downloadable application package for this program by the CFDA number. Do not include the CFDA number's alpha suffix in your search (*e.g.,* search for 84.327, not 84.327N).

Please note the following:

- Your participation in Grants.gov is voluntary.
- When you enter the Grants.gov site, you will find information about submitting an application electronically through the site, as well as the hours of operation.
- Applications received by Grants.gov are date and time stamped. Your application must be fully uploaded and submitted and must be date and time stamped by the Grants.gov system no later than 4:30:00 p.m., Washington, DC time, on the application deadline date. Except as otherwise noted in this section, we will not accept your application if it is received—that is, date and time stamped by the Grants.gov system—after 4:30:00 p.m., Washington, DC time, on the application deadline date. We do not consider an application that does not comply with the deadline requirements. When we retrieve your application from Grants.gov, we will notify you if we are rejecting your application because it was date and time stamped by the Grants.gov system after 4:30:00 p.m., Washington, DC time, on the application deadline date.
- The amount of time it can take to upload an application will vary depending on a variety of factors, including the size of the application and the speed of your Internet connection. Therefore, we strongly recommend that you do not wait until the application deadline date to begin the submission process through Grants.gov.
- You should review and follow the Education Submission Procedures for submitting an application through Grants.gov that are included in the application package for this competition to ensure that you submit your application in a timely manner to the Grants.gov system. You can also find the Education Submission Procedures pertaining to Grants.gov under News and Events on the Department's G5 system home page at *http://www.G5.gov.*
- You will not receive additional point value because you submit your application in electronic format, nor will we penalize you if you submit your application in paper format.
- If you submit your application electronically, you must submit all documents electronically, including all information you typically provide on the following forms: The Application for Federal Assistance (SF 424), the Department of Education Supplemental Information for SF 424, Budget Information—Non-Construction Programs (ED 524), and all necessary assurances and certifications.
- If you submit your application electronically, you must upload any narrative sections and all other attachments to your application as files in a .PDF (Portable Document) format only. If you upload a file type other than a .PDF or submit a password-protected file, we will not review that material.
- Your electronic application must comply with any page-limit requirements described in this notice.
- After you electronically submit your application, you will receive from Grants.gov an automatic notification of receipt that contains a Grants.gov tracking number. (This notification indicates receipt by Grants.gov only, not receipt by the Department.) The Department then will retrieve your application from Grants.gov and send a second notification to you by e-mail. This second notification indicates that the Department has received your application and has assigned your application a PR/Award number (an ED-specified identifying number unique to your application).
- We may request that you provide us original signatures on forms at a later date.

Application Deadline Date Extension in Case of Technical Issues with the Grants.gov System: If you are experiencing problems submitting your application through Grants.gov, please contact the Grants.gov Support Desk, toll free, at 1–800–518–4726. You must obtain a Grants.gov Support Desk Case Number and must keep a record of it.

If you are prevented from electronically submitting your application on the application deadline date because of technical problems with the Grants.gov system, we will grant you an extension until 4:30:00 p.m., Washington, DC time, the following business day to enable you to transmit your application electronically or by hand delivery. You also may mail your application by following the mailing instructions described elsewhere in this notice.

If you submit an application after 4:30:00 p.m., Washington, DC time, on the application deadline date, please contact the person listed under **FOR FURTHER INFORMATION CONTACT** in section VII of this notice and provide an explanation of the technical problem you experienced with Grants.gov, along with the Grants.gov Support Desk Case Number. We will accept your application if we can confirm that a technical problem occurred with the Grants.gov system and that that problem affected your ability to submit your application by 4:30:00 p.m., Washington, DC time, on the application deadline date. The Department will contact you after a determination is made on whether your application will be accepted.

Note: The extensions to which we refer in this section apply only to the unavailability of, or technical problems with, the Grants.gov system. We will not grant you an extension if you failed to fully register to submit your application to Grants.gov before the application deadline date and time or if the technical problem you experienced is unrelated to the Grants.gov system.

b. Submission of Paper Applications by Mail

If you submit your application in paper format by mail (through the U.S. Postal Service or a commercial carrier), you must mail the original and two copies of your application, on or before the application deadline date, to the Department at the following address: U.S. Department of Education, Application Control Center, *Attention:* (CFDA Number 84.327N), LBJ Basement Level 1, 400 Maryland Avenue, SW., Washington, DC 20202–4260.

You must show proof of mailing consisting of one of the following:

(1) A legibly dated U.S. Postal Service postmark.

(2) A legible mail receipt with the date of mailing stamped by the U.S. Postal Service.

(3) A dated shipping label, invoice, or receipt from a commercial carrier.

(4) Any other proof of mailing acceptable to the Secretary of the U.S. Department of Education.

If you mail your application through the U.S. Postal Service, we do not

accept either of the following as proof of mailing:

(1) A private metered postmark.

(2) A mail receipt that is not dated by the U.S. Postal Service.

If your application is postmarked after the application deadline date, we will not consider your application.

Note: The U.S. Postal Service does not uniformly provide a dated postmark. Before relying on this method, you should check with your local post office.

c. Submission of Paper Applications by Hand Delivery

If you submit your application in paper format by hand delivery, you (or a courier service) must deliver the original and two copies of your application by hand, on or before the application deadline date, to the Department at the following address: U.S. Department of Education, Application Control Center, *Attention:* (CFDA Number 84.327N), 550 12th Street, SW., Room 7041, Potomac Center Plaza, Washington, DC 20202–4260.

The Application Control Center accepts hand deliveries daily between 8:00 a.m. and 4:30:00 p.m., Washington, DC time, except Saturdays, Sundays, and Federal holidays.

Note for Mail or Hand Delivery of Paper Applications: If you mail or hand deliver your application to the Department—

(1) You must indicate on the envelope and—if not provided by the Department—in Item 11 of the SF 424 the CFDA number, including suffix letter, if any, of the competition under which you are submitting your application; and

(2) The Application Control Center will mail to you a notification of receipt of your grant application. If you do not receive this grant notification within 15 business days from the application deadline date, you should call the U.S. Department of Education Application Control Center at (202) 245–6288.

V. Application Review Information

1. *Selection Criteria:* The selection criteria for this program are from 34 CFR 75.210 and are listed in the application package.

2. *Review and Selection Process:* We remind potential applicants that in reviewing applications in any discretionary grant competition, the Secretary may consider, under 34 CFR 75.217(d)(3), the past performance of the applicant in carrying out a previous award, such as the applicant's use of funds, achievement of project objectives, and compliance with grant conditions. The Secretary may also consider whether the applicant failed to submit a timely performance report or submitted a report of unacceptable quality.

In addition, in making a competitive grant award, the Secretary also requires various assurances including those applicable to Federal civil rights laws that prohibit discrimination in programs or activities receiving Federal financial assistance from the Department of Education (34 CFR 100.4, 104.5, 106.4, 108.8, and 110.23).

3. *Additional Review and Selection Process Factors:* In the past, the Department has had difficulty finding peer reviewers for certain competitions because so many individuals who are eligible to serve as peer reviewers have conflicts of interest. The Standing Panel requirements under IDEA also have placed additional constraints on the availability of reviewers. Therefore, the Department has determined that, for some discretionary grant competitions, applications may be separated into two or more groups and ranked and selected for funding within specific groups. This procedure will make it easier for the Department to find peer reviewers, by ensuring that greater numbers of individuals who are eligible to serve as reviewers for any particular group of applicants will not have conflicts of interest. It also will increase the quality, independence, and fairness of the review process, while permitting panel members to review applications under discretionary grant competitions for which they also have submitted applications. However, if the Department decides to select an equal number of applications in each group for funding, this may result in different cut-off points for fundable applications in each group.

4. *Special Conditions:* Under 34 CFR 74.14 and 80.12, the Secretary may impose special conditions on a grant if the applicant or grantee is not financially stable; has a history of unsatisfactory performance; has a financial or other management system that does not meet the standards in 34 CFR parts 74 or 80, as applicable; has not fulfilled the conditions of a prior grant; or is otherwise not responsible.

VI. Award Administration Information

1. *Award Notices:* If your application is successful, we notify your U.S. Representative and U.S. Senators and send you a Grant Award Notification (GAN). We may notify you informally, also.

If your application is not evaluated or not selected for funding, we notify you.

2. *Administrative and National Policy Requirements:* We identify administrative and national policy requirements in the application package and reference these and other requirements in the *Applicable Regulations* section of this notice.

We reference the regulations outlining the terms and conditions of an award in the *Applicable Regulations* section of this notice and include these and other specific conditions in the GAN. The GAN also incorporates your approved application as part of your binding commitments under the grant.

3. *Reporting:* (a) If you apply for a grant under this competition, you must ensure that you have in place the necessary processes and systems to comply with the reporting requirements in 2 CFR part 170 should you receive funding under the competition. This does not apply if you have an exception under 2 CFR 170.110(b).

(b) At the end of your project period, you must submit a final performance report, including financial information, as directed by the Secretary. If you receive a multi-year award, you must submit an annual performance report that provides the most current performance and financial expenditure information as directed by the Secretary under 34 CFR 75.118. The Secretary may also require more frequent performance reports under 34 CFR 75.720(c). For specific requirements on reporting, please go to *http://www.ed.gov/fund/grant/apply/appforms/appforms.html.*

4. *Performance Measures:* Under the Government Performance and Results Act of 1993 (GPRA), the Department has established a set of performance measures, including long-term measures, that are designed to yield information on various aspects of the effectiveness and quality of the Technology and Media Services for Individuals with Disabilities program. These measures focus on the extent to which projects are of high quality, are relevant to improving outcomes of children with disabilities, and contribute to improving outcomes for children with disabilities. We will collect data on these measures from the project funded under this competition.

The grantee will be required to report information on its project's performance in annual performance reports to the Department (34 CFR 75.590).

5. *Continuation Awards:* In making a continuation award, the Secretary may consider, under 34 CFR 75.253, the extent to which a grantee has made "substantial progress toward meeting the objectives in its approved application." This consideration includes the review of a grantee's progress in meeting the targets and projected outcomes in its approved application, and whether the grantee has expended funds in a manner that is consistent with its approved

application and budget. In making a continuation grant, the Secretary also considers whether the grantee is operating in compliance with the assurances in its approved application, including those applicable to Federal civil rights laws that prohibit discrimination in programs or activities receiving Federal financial assistance from the Department (34 CFR 100.4, 104.5, 106.4, 108.8, and 110.23).

VII. Agency Contact

FOR FURTHER INFORMATION CONTACT: Ernest Hairston, U.S. Department of Education, 400 Maryland Avenue, SW., room 4070, Potomac Center Plaza (PCP), Washington, DC 20202–2550. *Telephone:* (202) 245–7366.

If you use a TDD, call the Federal Relay Service (FRS), toll free, at 1–800–877–8339.

VIII. Other Information

Accessible Format: Individuals with disabilities can obtain this document and a copy of the application package in an accessible format (*e.g.,* braille, large print, audiotape, or computer diskette) by contacting the Grants and Contracts Services Team, U.S. Department of Education, 400 Maryland Avenue, SW., room 5075, PCP, Washington, DC 20202–2550. *Telephone:* (202) 245–7363. If you use a TDD, call the FRS, toll free, at 1–800–877–8339.

Electronic Access to This Document: The official version of this document is the document published in the **Federal Register**. Free Internet access to the official edition of the **Federal Register** and the Code of Federal Regulations is available via the Federal Digital System at: *http://www.gpo.gov/fdsys.* At this site you can view this document, as well as all other documents of this Department published in the **Federal Register**, in text or Adobe Portable Document Format (PDF). To use PDF you must have Adobe Acrobat Reader, which is available free at the site.

You may also access documents of the Department published in the **Federal Register** by using the article search feature at: *http://www.federalregister.gov.* Specifically, through the advanced search feature at this site, you can limit your search to documents published by the Department.

Dated: April 28, 2011.

Alexa Posny,

Assistant Secretary for Special Education and Rehabilitative Services.

[FR Doc. 2011–10907 Filed 5–3–11; 8:45 am]

BILLING CODE 4000–01–P

DEPARTMENT OF EDUCATION

Applications for New Awards; Personnel Development To Improve Services and Results for Children With Disabilities

AGENCY: Office of Special Education and Rehabilitative Services, Department of Education.

ACTION: Correction; Notice inviting applications for new awards for fiscal year (FY) 2011.

SUMMARY: On April 13, 2011, we published in the **Federal Register** (76 FR 20637) a notice inviting applications for new awards for FY 2011 under certain Personnel Development to Improve Services and Results for Children with Disabilities competitions authorized under the Individuals with Disabilities Education Act. Through this notice, we are correcting a technical error in Focus Area E of the Personnel Preparation in Special Education, Early Intervention, and Related Services (84.325K) priority, which appears on pages 20640 through 20644 of the original application notice.

FOR FURTHER INFORMATION CONTACT: Maryann McDermott, U.S. Department of Education, 400 Maryland Avenue, SW., room 4062, Potomac Center Plaza, Washington, DC 20202–2600. *Telephone:* (202) 245–7439.

If you use a telecommunications device for the deaf (TDD), call the Federal Relay Service (FRS), toll-free, at 1–800–877–8339.

SUPPLEMENTARY INFORMATION: We make the following correction:

On page 20643, second column, paragraph four, in *Focus Area E: Preparing Personnel to Provide Secondary Transition Services to School-Age Children with Disabilities,* second sentence, we remove the word "or" and replace it with the word "and". The sentence now correctly reads, "Programs that offer a sequence of career, vocational, or secondary transition courses and that enable personnel to meet State requirements for a credential or endorsement in secondary transition services for children with disabilities are eligible under Focus Area E."

Accessible Format: Individuals with disabilities can obtain this document in an accessible format (*e.g.,* braille, large print, audiotape, or computer diskette) on request to the contact person listed under **FOR FURTHER INFORMATION CONTACT**.

Electronic Access to This Document: The official version of this document is the document published in the **Federal Register.** Free Internet access to the official edition of the **Federal Register** and the Code of Federal Regulations is available via the Federal Digital System at: *http://www.gpo.gov/fdsys.* At this site you can view this document, as well as all other documents of this Department published in the **Federal Register,** in text or Adobe Portable Document Format (PDF). To use PDF you must have Adobe Acrobat Reader, which is available free at the site.

You may also access documents of the Department published in the **Federal Register** by using the article search feature at: *http://www.federalregister.gov.* Specifically, through the advanced search feature at this site, you can limit your search to documents published by the Department.

Dated: April 28, 2011.

Alexa Posny,

Assistant Secretary for Special Education and Rehabilitative Services.

[FR Doc. C1–2011–10908 Filed 5–3–11; 8:45 am]

BILLING CODE 4000–01–P

DEPARTMENT OF ENERGY

Energy Efficiency and Renewable Energy

State Energy Advisory Board (STEAB)

AGENCY: Energy Efficiency and Renewable Energy, Department of Energy.

ACTION: Notice of Open Teleconference.

SUMMARY: This notice announces a teleconference call of the State Energy Advisory Board (STEAB). The Federal Advisory Committee Act (Pub. L. 92–463; 86 Stat.770) requires that public notice of these meetings be announced in the **Federal Register**.

DATES: Thursday, May 19th, 2011 3:30 to 4:30 p.m. EST.

The call in number is 877–445–5075 and the passcode is 2402235515.

FOR FURTHER INFORMATION CONTACT: Gil Sperling, STEAB Designated Federal Officer, U.S. Department of Energy, Office of Energy Efficiency and Renewable Energy, 1000 Independence Ave, SW., Washington DC 20585; e-mail: *gil.sperling@ee.doe.gov.*

SUPPLEMENTARY INFORMATION:

Purpose of the Board: To make recommendations to the Assistant Secretary for the Office of Energy Efficiency and Renewable Energy regarding goals and objectives, programmatic and administrative policies, and to otherwise carry out the Board's responsibilities as designated in the State Energy Efficiency Programs

Improvement Act of 1990 (Pub. L. 101–440).

Tentative Agenda: Review and update accomplishments of STEAB's Sub-committee and Task Forces, continue planning for the June live Board meeting in Washington, DC, and provide an update to the Board on routine business matters and other topics of interest.

Public Participation: The meeting is open to the public. Written statements may be filed with the Board either before or after the meeting. Members of the public who wish to make oral statements pertaining to agenda items should contact Gil Sperling at the address or by e-mail listed above. Requests to make oral comments must be received five days prior to the meeting; reasonable provision will be made to include requested topic(s) on the agenda. The Chair of the Board is empowered to conduct the meeting in a fashion that will facilitate the orderly conduct of business.

Minutes: The minutes of the meeting will be available for public review and copying within 60 days on the STEAB Web site: *http://www.steab.org.*

Issued at Washington, DC, on April 28, 2011.

LaTanya Butler,

Acting Deputy Committee Management Officer.

[FR Doc. 2011–10879 Filed 5–3–11; 8:45 am]

BILLING CODE 6450–01–P

DEPARTMENT OF ENERGY

Federal Energy Regulatory Commission

[Project No. 637–079]

Public Utility District No. 1 Chelan County; Notice of Application for Amendment of License and Soliciting Comments, Motions To Intervene, and Protests

Take notice that the following hydroelectric application has been filed with the Commission and is available for public inspection:

a. *Application Type:* Non-Project Use of Project Lands and Waters.

b. *Project No.:* 637–079.

c. *Date Filed:* April 15, 2011.

d. *Applicant:* Public Utility District No. 1 Chelan County.

e. *Name of Project:* Lake Chelan Hydroelectric Project.

f. *Location:* The project is located on the Chelan River in Chelan County near the City of Chelan, Washington.

g. *Filed Pursuant to:* Federal Power Act 16 U.S.C. 791(a)–825(r).

h. *Applicant Contact:* Michelle Smith, Licensing and Compliance Manager, Public Utility District No. 1 of Chelan County, 327 North Wenatchee Ave., Wenatchee, Washington 98801. Phone: (888) 663–8121, ext 4180. e-mail: *michelle@chelanpud.org.*

i. *FERC Contact:* Tara Perry at (202) 502–6546; e-mail: *tara.perry@ferc.gov.*

j. Deadline for filing comments, motions to intervene, and protests, is May 31, 2011.

All documents may be filed electronically via the Internet. See, 18 CFR 385.2001(a)(1)(iii) and the instructions on the Commission's Web site at *http://www.ferc.gov/docs-filing/efiling.asp.* If unable to be filed electronically, documents may be paper-filed. To paper-file, an original and seven copies should be mailed to: Secretary, Federal Energy Regulatory Commission, 888 First Street, NE., Washington, DC 20426. Commenters can submit brief comments up to 6,000 characters, without prior registration, using the eComment system at *http://www.ferc.gov/docs-filing/ecomment.asp.* You must include your name and contact information at the end of your comments.

Please include the project number (P–637–079) on any comments, motions, or recommendations filed.

k. *Description of the Application:* Public Utility District No. 1 Chelan County has filed a request for Commission approval to authorize Chelan Ridge Community Association to construct a new 5,350 square foot, 28-slip marina on the south shoreline of Lake Chelan within the project boundary. Construction would include a gangway (5 ft x 65 ft) attached to the existing dock; a marina with a floating walk (6 ft x 428 ft) and 28 finger piers (3 ft x 26 ft) parallel to the shoreline; and installation of 84 whole, mature fruit trees as large woody debris fish habitat mitigation structures.

l. *Location of the Application:* This filing is available for review at the Commission or may be viewed on the Commission's Web site at *http://www.ferc.gov,* using the "eLibrary" link. Enter the docket number excluding the last three digits in the docket number field to access the document. You may also register online at *http://www.ferc.gov/docs-filing/esubscription.asp* to be notified via e-mail of new filings and issuances related to this or other pending projects. For assistance, contact FERC Online Support at *FERCOnlineSupport@ferc.gov* or toll-free at (866) 208–3676, or for TTY, contact (202) 502–8659. A copy is also available for inspection and reproduction at the address in item (h) above.

m. Individuals desiring to be included on the Commission's mailing list should so indicate by writing to the Secretary of the Commission.

n. Comments, Protests, or Motions to Intervene—Anyone may submit comments, a protest, or a motion to intervene in accordance with the requirements of Rules of Practice and Procedure, 18 CFR 385.210, .211, .214. In determining the appropriate action to take, the Commission will consider all protests or other comments filed, but only those who file a motion to intervene in accordance with the Commission's Rules may become a party to the proceeding. Any comments, protests, or motions to intervene must be received on or before the specified comment date for the particular application.

o. *Filing and Service of Responsive Documents:* Any filing must (1) bear in all capital letters the title "COMMENTS", "PROTEST", or "MOTION TO INTERVENE" as applicable; (2) set forth in the heading the name of the applicant and the project number of the application to which the filing responds; (3) furnish the name, address, and telephone number of the person protesting or intervening; and (4) otherwise comply with the requirements of 18 CFR 385.2001 through 385.2005. All comments, motions to intervene, or protests must set forth their evidentiary basis and otherwise comply with the requirements of 18 CFR 4.34(b). Agencies may obtain copies of the application directly from the applicant. A copy of any protest or motion to intervene must be served upon each representative of the applicant specified in the particular application. If an intervener files comments or documents with the Commission relating to the merits of an issue that may affect the responsibilities of a particular resource agency, they must also serve a copy of the document on that resource agency. A copy of all other filings in reference to this application must be accompanied by proof of service on all persons listed in the service list prepared by the Commission in this proceeding, in accordance with 18 CFR 4.34(b) and 385.2010.

Dated: April 28, 2011.

Kimberly D. Bose,

Secretary.

[FR Doc. 2011–10840 Filed 5–3–11; 8:45 am]

BILLING CODE 6717–01–P

DEPARTMENT OF ENERGY

Federal Energy Regulatory Commission

[Project No. 13080–003]

Putnam Green Power, LLC; Notice of Application Tendered for Filing With the Commission and Soliciting Additional Study Requests

Take notice that the following hydroelectric application has been filed with the Commission and is available for public inspection.

a. *Type of Application:* Exemption from Licensing.

b. *Project No.:* 13080–003.

c. *Filing Date:* April 13, 2011.

d. *Applicant:* Putnam Green Power, LLC.

e. *Name of Project:* Cargill Falls Hydroelectric Project.

f. *Location:* On the Quinebaug River, in the Town of Putnam, Windham County, Connecticut. The proposed project would not occupy any Federal lands.

g. *Filed Pursuant to:* Public Utility Regulatory Policies Act of 1978, 16 U.S.C. 2705, 2708.

h. *Applicant Contact:* Ms. Leanne Parker, Putnam Green Power, LLC, 58 Pomfrest Street, Putnam, CT 06260; (401) 529–8738; *parkerleanne@yahoo.com.*

i. *FERC Contact:* Jeff Browning at (202) 502–8677; or e-mail at *Jeffrey.browning@ferc.gov.*

j. *Cooperating agencies:* Federal, state, local, and Tribal agencies with jurisdiction and/or special expertise with respect to environmental issues that wish to cooperate in the preparation of the environmental document should follow the instructions for filing such requests described in item l below. Cooperating agencies should note the Commission's policy that agencies that cooperate in the preparation of the environmental document cannot also intervene. *See,* 94 FERC ¶ 61,076 (2001).

k. Pursuant to section 4.32(b)(7) of the Commission's regulations, 18 CFR 4.32(b)(7), if any resource agency, Indian Tribe, or person believes that an additional scientific study should be conducted in order to form an adequate factual basis for a complete analysis of the application on its merit, the resource agency, Indian Tribe, or person must file a request for a study with the Commission not later than 60 days from the date of filing of the application, and serve a copy of the request on the applicant. Because the application was denied and then reinstated with a new filing date of April 13, 2011, a request for a study must be filed with the Commission no later than 60 days from April 13, 2011.

l. *Deadline for filing additional study requests and requests for cooperating agency status:* June 13, 2011.

All documents may be filed electronically via the Internet. See 18 CFR 385.2001(a)(1)(iii) and the instructions on the Commission's Web site *http://www.ferc.gov/docs-filing/efiling.asp.* Commenters can submit brief comments up to 6,000 characters, without prior registration, using the eComment system at *http://www.ferc.gov/docs-filing/ecomment.asp.* You must include your name and contact information at the end of your comments. For assistance, please contact FERC Online Support at *FERCOnlineSupport@ferc.gov* or toll free at 1–866–208–3676, or for TTY, (202) 502–8659. Although the Commission strongly encourages electronic filing, documents may also be paper-filed. *To paper-file, mail an original and seven copies to:* Kimberly D. Bose, Secretary, Federal Energy Regulatory Commission, 888 First Street, NE., Washington, DC 20426.

m. The application is not ready for environmental analysis at this time.

n. *Project description:* (1) Two existing concrete gravity dams consisting of a 60-foot-long, 18-foot-high overflow spillway, and an 85-foot-long, 18-foot-high gated spillway separated by a 70-foot-long natural rock outcrop; (2) an existing 13-acre upper reservoir with a normal water surface elevation of 253.4 feet above mean sea level; (3) an existing forebay and intake structure equipped with four 3-foot-wide, 5-foot-high gates; (4) an existing 135-foot-long penstock bifurcating into existing 135-foot-long and 360-foot-long penstocks; (5) two existing powerhouses, one that will contain a refurbished 530 kilowatt (kW) generating unit and one that will contain a refurbished 345 kW unit for a total installed capacity of 875 kW; (6) two existing tailraces, one 75-foot-long, and one 125-foot-long; and (7) an existing 100-foot-long transmission line.

o. A copy of the application is available for review at the Commission in the Public Reference Room or may be viewed on the Commission's Web site at *http://www.ferc.gov* using the "eLibrary" link. Enter the docket number excluding the last three digits in the docket number field to access the document. For assistance, contact FERC Online Support. A copy is also available for inspection and reproduction at the address in item h above.

You may also register online at *http://www.ferc.gov/docs-filing/esubscription.asp* to be notified via e-mail of new filings and issuances related to this or other pending projects. For assistance, contact FERC Online Support.

p. With this notice, we are initiating consultation with the Connecticut State Historic Preservation Officer (SHPO), as required by 106, National Historic Preservation Act, and the regulations of the Advisory Council on Historic Preservation, 36 CFR 800.4.

q. *Procedural schedule:* The application will be processed according to the following preliminary Hydro Licensing Schedule. Revisions to the schedule will be made as appropriate.

Issue Notice of Acceptance	June 2011.
Issue Notice of Ready for Environmental Analysis.	June 2011.
Comments, Recommendations, and Terms and Conditions.	Aug. 2011.
Commission issues EA	Nov. 2011.

Dated: April 28, 2011.

Kimberly D. Bose,

Secretary.

[FR Doc. 2011–10841 Filed 5–3–11; 8:45 am]

BILLING CODE 6717–01–P

DEPARTMENT OF ENERGY

Federal Energy Regulatory Commission

[Project No. 13853–000]

Magnolia Water LLC; Notice of Preliminary Permit Application Accepted for Filing and Soliciting Comments, Motions To Intervene, and Competing Applications

On September 30, 2010, Magnolia Water LLC filed an application, pursuant to section 4(f) of the Federal Power Act, proposing to study the feasibility of hydropower at the U.S. Army Corps of Engineers (Corps) Sardis Lake in Latimer County, Oklahoma. The sole purpose of a preliminary permit, if issued, is to grant the permit holder priority to file a license application during the permit term. A preliminary permit does not authorize the permit holder to perform any land-disturbing activities or otherwise enter upon lands or waters owned by others without the owners' express permission.

The proposed pumped storage project would consist of the following: (1) An 120-foot-high, 9,000-foot-long earth embankment dam creating; (2) an upper reservoir with a surface area of 85 acres and an 5,000 acre-foot storage capacity; (3) a 60-foot-high, 7,300-foot-long earth embankment dam creating; (4) a lower reservoir with a surface area of 200 acres and an 5,000 acre-foot storage capacity;

(5) one 32-foot-diameter, 8,000-foot-long penstock connecting the two reservoirs; (6) a powerhouse/pumping station containing 3 pump/generating units with a total generating capacity of 750 megawatts; (7) (8) a 9,000-foot-long pipeline from Corps' Sardis Lake to fill the lower reservoir and (9) a transmission line to an existing distribution line. The proposed project would have an average annual generation of 1,920,000 megawatt-hours (MWh), which would be sold to a local utility.

Applicant Contact: Mr. Fred Brown, 4265 Kellway Circle Addison, Texas 75001; phone (972) 239–0707.

FERC Contact: Michael Spencer, (202) 502–6093.

Deadline for filing comments, motions to intervene, competing applications (without notices of intent), or notices of intent to file competing applications: 60 days from the issuance of this notice. Competing applications and notices of intent must meet the requirements of 18 CFR 4.36. Comments, motions to intervene, notices of intent, and competing applications may be filed electronically via the Internet. See 18 CFR 385.2001(a)(1)(iii) and the instructions on the Commission's Web site *http://www.ferc.gov/docs-filing/efiling.asp.* Commenters can submit brief comments up to 6,000 characters, without prior registration, using the eComment system at *http://www.ferc.gov/docs-filing/ecomment.asp.* You must include your name and contact information at the end of your comments. For assistance, please contact FERC Online Support at *FERCOnlineSupport@ferc.gov;* call toll-free at (866) 208–3676; or, for TTY, contact (202) 502–8659. Although the Commission strongly encourages electronic filing, documents may also be paper-filed. To paper-file, mail an original and seven copies to: Kimberly D. Bose, Secretary, Federal Energy Regulatory Commission, 888 First Street, NE., Washington, DC 20426.

More information about this project, including a copy of the application, can be viewed or printed on the "eLibrary" link of the Commission's Web site at *http://www.ferc.gov/docs-filing/elibrary.asp.* Enter the docket number (P–13853–000) in the docket number field to access the document. For assistance, contact FERC Online Support.

Dated: April 27, 2011.

Kimberly D. Bose,

Secretary.

[FR Doc. 2011–10748 Filed 5–3–11; 8:45 am]

BILLING CODE 6717–01–P

DEPARTMENT OF ENERGY

Federal Energy Regulatory Commission

[Project No. 13852–000]

Hawthorn Water LLC; Notice of Preliminary Permit Application Accepted for Filing and Soliciting Comments, Motions To Intervene, and Competing Applications

On September 30, 2010, Hawthorn Water LLC filed an application, pursuant to section 4(f) of the Federal Power Act, proposing to study the feasibility of hydropower near the town of Clayton, on the Kiamichi River in Pushmataha County, Oklahoma. The sole purpose of a preliminary permit, if issued, is to grant the permit holder priority to file a license application during the permit term. A preliminary permit does not authorize the permit holder to perform any land-disturbing activities or otherwise enter upon lands or waters owned by others without the owners' express permission.

The proposed pumped storage project would consist of the following: (1) An 120-foot-high, 3,000-foot-long earth embankment dam creating; (2) an upper reservoir with a surface area of 120 acres and an 6,000 acre-foot storage capacity; (3) a 80-foot-high, 2,800-foot-long earth embankment dam creating; (4) a lower reservoir with a surface area of 110 acres and an 6,000 acre-foot storage capacity; (5) one 32-foot-diameter, 9,600-foot-long penstock connecting the two reservoirs; (6) a powerhouse/pumping station containing 3 pump/generating units with a total generating capacity of 750 megawatts; (7) a 5-foot-high, 200-foot-long diversion dam on the Kiamichi River for filling the reservoirs; (8) a reservoir, on the Kiamichi River, with a surface area of 50 acres and an 250 acre-foot storage capacity; (9) a 9,000-foot-long pipeline from the diversion dam to the lower reservoir and (10) a transmission line to an existing distribution line. The proposed project would have an average annual generation of 1,920,000 megawatt-hours (MWh), which would be sold to a local utility.

Applicant Contact: Mr. Fred Brown, 4265 Kellway Circle Addison, Texas 75001; phone (972) 239–0707.

FERC Contact: Michael Spencer, (202) 502–6093.

Deadline for filing comments, motions to intervene, competing applications (without notices of intent), or notices of intent to file competing applications: 60 days from the issuance of this notice. Competing applications and notices of intent must meet the requirements of 18 CFR 4.36. Comments, motions to intervene, notices of intent, and competing applications may be filed electronically via the Internet. See 18 CFR 385.2001(a)(1)(iii) and the instructions on the Commission's Web site *http://www.ferc.gov/docs-filing/efiling.asp.* Commenters can submit brief comments up to 6,000 characters, without prior registration, using the eComment system at *http://www.ferc.gov/docs-filing/ecomment.asp.* You must include your name and contact information at the end of your comments. For assistance, please contact FERC Online Support at *FERCOnlineSupport@ferc.gov;* call toll-free at (866) 208–3676; or, for TTY, contact (202) 502–8659. Although the Commission strongly encourages electronic filing, documents may also be paper-filed. To paper-file, mail an original and seven copies to: Kimberly D. Bose, Secretary, Federal Energy Regulatory Commission, 888 First Street, NE., Washington, DC 20426.

More information about this project, including a copy of the application, can be viewed or printed on the "eLibrary" link of the Commission's Web site at *http://www.ferc.gov/docs-filing/elibrary.asp.* Enter the docket number (P–13852–000) in the docket number field to access the document. For assistance, contact FERC Online Support.

Dated: April 27, 2011.

Kimberly D. Bose,

Secretary.

[FR Doc. 2011–10747 Filed 5–3–11; 8:45 am]

BILLING CODE 6717–01–P

DEPARTMENT OF ENERGY

Federal Energy Regulatory Commission

[Project No. 13851–000]

Indian Blanket Water LLC; Notice of Preliminary Permit Application Accepted for Filing and Soliciting Comments, Motions To Intervene, and Competing Applications

On September 30, 2010, Indian Blanket Water LLC filed an application, pursuant to section 4(f) of the Federal Power Act, proposing to study the feasibility of hydropower near the town of Clayton, on the Kiamichi River in Pushmataha County, Oklahoma. The sole purpose of a preliminary permit, if issued, is to grant the permit holder priority to file a license application during the permit term. A preliminary permit does not authorize the permit holder to perform any land-disturbing

activities or otherwise enter upon lands or waters owned by others without the owners' express permission.

The proposed pumped storage project would consist of the following: (1) A 120-foot-high, 3,200-foot-long earth embankment dam; (2) a 30-foot-high, 300-foot-long earth embankment saddle dam creating; (3) an upper reservoir with a surface area of 133 acres and an 8,300 acre-foot storage capacity; (4) a 60-foot-high, 5,600-foot-long earth embankment dam creating; (5) a lower reservoir with a surface area of 332 acres and an 8,100 acre-foot storage capacity; (6) one 28-foot-diameter, 7,500-foot-long penstock connecting the two reservoirs; (7) a powerhouse/pumping station containing 3 pump/generating units with a total generating capacity of 750 megawatts; (8) a 5-foot-high, 200-foot-long diversion dam on the Kiamichi River for filling the reservoirs creating; (9) a reservoir, on the Kiamichi River, with a surface area of 50 acres and an 250 acre-foot storage capacity; (10) a 24-inch-diameter, 7,000-foot-long pipeline from the diversion dam to the lower reservoir and (11) a transmission line to an existing distribution line. The proposed project would have an average annual generation of 1,920,000 megawatt-hours (MWh), which would be sold to a local utility.

Applicant Contact: Mr. Fred Brown, 4265 Kellway Circle, Addison, Texas 75001; phone (972) 239–0707.

FERC Contact: Michael Spencer, (202) 502–6093.

Deadline for filing comments, motions to intervene, competing applications (without notices of intent), or notices of intent to file competing applications: 60 days from the issuance of this notice. Competing applications and notices of intent must meet the requirements of 18 CFR 4.36. Comments, motions to intervene, notices of intent, and competing applications may be filed electronically via the Internet. See 18 CFR 385.2001(a)(1)(iii) and the instructions on the Commission's Web site *http://www.ferc.gov/docs-filing/efiling.asp*. Commenters can submit brief comments up to 6,000 characters, without prior registration, using the eComment system at *http://www.ferc.gov/docs-filing/ecomment.asp.* You must include your name and contact information at the end of your comments. For assistance, please contact FERC Online Support at *FERCOnlineSupport@ferc.gov;* call toll-free at (866) 208–3676; or, for TTY, contact (202) 502–8659. Although the Commission strongly encourages electronic filing, documents may also be paper-filed. To paper-file, mail an original and seven copies to: Kimberly D. Bose, Secretary, Federal Energy Regulatory Commission, 888 First Street, NE., Washington, DC 20426.

More information about this project, including a copy of the application, can be viewed or printed on the "eLibrary" link of the Commission's Web site at *http://www.ferc.gov/docs-filing/elibrary.asp*. Enter the docket number (P–13851–000) in the docket number field to access the document. For assistance, contact FERC Online Support.

Dated: April 27, 2011.

Kimberly D. Bose,

Secretary.

[FR Doc. 2011–10746 Filed 5–3–11; 8:45 am]

BILLING CODE 6717–01–P

DEPARTMENT OF ENERGY

Federal Energy Regulatory Commission

[Project No. 13842–000]

Wild Flower Water LLC; Notice of Preliminary Permit Application Accepted for Filing and Soliciting Comments, Motions To Intervene, and Competing Applications

On September 23, 2010, Wild Flower Water LLC filed an application, pursuant to section 4(f) of the Federal Power Act, proposing to study the feasibility of hydropower near the town of Clayton, on the Kiamichi River in Pushmataha County, Oklahoma. The sole purpose of a preliminary permit, if issued, is to grant the permit holder priority to file a license application during the permit term. A preliminary permit does not authorize the permit holder to perform any land-disturbing activities or otherwise enter upon lands or waters owned by others without the owners' express permission.

The proposed pumped storage project would consist of the following: (1) An 85-foot-high, 800-foot-long earth embankment dam creating; (2) an upper reservoir with a surface area of 220 acres and an 8,000 acre-foot storage capacity; (3) a 50-foot-high, 10,500-foot-long earth embankment dam creating; (4) a lower reservoir with a surface area of 300 acres and an 8,400 acre-foot storage capacity; (5) two 28-foot-diameter, 7,500-foot-long penstocks connecting the two reservoirs; (6) a powerhouse/pumping station containing 4 pump/generating units with a total generating capacity of 1,100 megawatts; (7) a 5-foot-high, 200-foot-long diversion dam on the Kiamichi River for filling the reservoirs; (8) a reservoir, on the Kiamichi River, with a surface area of 50 acres and an 100 acre-foot storage capacity; (9) a 1,200-foot-long pipeline from the diversion dam to the lower reservoir and (10) a transmission line to an existing distribution line. The proposed project would have an average annual generation of 2,810,000 megawatt-hours (MWh), which would be sold to a local utility.

Applicant Contact: Mr. Fred Brown, 4265 Kellway Circle Addison, Texas 75001; phone (972) 239–0707.

FERC Contact: Michael Spencer, (202) 502–6093.

Deadline for filing comments, motions to intervene, competing applications (without notices of intent), or notices of intent to file competing applications: 60 days from the issuance of this notice. Competing applications and notices of intent must meet the requirements of 18 CFR 4.36. Comments, motions to intervene, notices of intent, and competing applications may be filed electronically via the Internet. See 18 CFR 385.2001(a)(1)(iii) and the instructions on the Commission's Web site *http://www.ferc.gov/docs-filing/efiling.asp.* Commenters can submit brief comments up to 6,000 characters, without prior registration, using the eComment system at *http://www.ferc.gov/docs-filing/ecomment.asp.* You must include your name and contact information at the end of your comments. For assistance, please contact FERC Online Support at *FERCOnlineSupport@ferc.gov;* call toll-free at (866) 208–3676; or, for TTY, contact (202) 502–8659. Although the Commission strongly encourages electronic filing, documents may also be paper-filed. To paper-file, mail an original and seven copies to: Kimberly D. Bose, Secretary, Federal Energy Regulatory Commission, 888 First Street, NE., Washington, DC 20426.

More information about this project, including a copy of the application, can be viewed or printed on the "eLibrary" link of the Commission's Web site at *http://www.ferc.gov/docs-filing/elibrary.asp.* Enter the docket number (P–13842–000) in the docket number field to access the document. For assistance, contact FERC Online Support.

Dated: April 27, 2011.

Kimberly D. Bose,

Secretary.

[FR Doc. 2011–10745 Filed 5–3–11; 8:45 am]

BILLING CODE 6717–01–P

DEPARTMENT OF ENERGY

Federal Energy Regulatory Commission

[Project No. 13854–000]

Oklahoma Rose Water LLC; Notice of Preliminary Permit Application Accepted for Filing and Soliciting Comments, Motions To Intervene, and Competing Applications

On September 30, 2010, Oklahoma Rose Water LLC filed an application, pursuant to section 4(f) of the Federal Power Act, proposing to study the feasibility of hydropower near the town of Clayton, on the Kiamichi River in Pushmataha County, Oklahoma. The sole purpose of a preliminary permit, if issued, is to grant the permit holder priority to file a license application during the permit term. A preliminary permit does not authorize the permit holder to perform any land-disturbing activities or otherwise enter upon lands or waters owned by others without the owners' express permission.

The proposed pumped storage project would consist of the following: (1) A 125-foot-high, 1,700-foot-long earth embankment dam; (2) a 50-foot-high, 700-foot-long earth embankment saddle dam creating; (3) an upper reservoir with a surface area of 104 acres and an 7,000 acre-foot storage capacity; (4) a 85-foot-high, 7,500-foot-long earth embankment dam creating; (5) a lower reservoir with a surface area of 130 acres and an 7,100 acre-foot storage capacity; (6) one 28-foot-diameter, 8,400-foot-long penstock connecting the two reservoirs; (7) a powerhouse/pumping station containing 4 pump/generating units with a total generating capacity of 840 megawatts; (8) a 5-foot-high, 200-foot-long diversion dam on the Kiamichi River for filling the reservoirs creating; (9) a reservoir, on the Kiamichi River, with a surface area of 25 acres and an 50 acre-foot storage capacity; (10) a 24-inch-diameter, 1,000-foot-long pipeline from the diversion dam to the lower reservoir and (11) a transmission line to an existing distribution line. The proposed project would have an average annual generation of 2,150,000 megawatt-hours (MWh), which would be sold to a local utility.

Applicant Contact: Mr. Fred Brown, 4265 Kellway Circle Addison, Texas 75001; phone (972) 239–0707.

FERC Contact: Michael Spencer, (202) 502–6093.

Deadline for filing comments, motions to intervene, competing applications (without notices of intent), or notices of intent to file competing applications: 60 days from the issuance of this notice. Competing applications and notices of intent must meet the requirements of 18 CFR 4.36. Comments, motions to intervene, notices of intent, and competing applications may be filed electronically via the Internet. See 18 CFR 385.2001(a)(1)(iii) and the instructions on the Commission's Web site *http://www.ferc.gov/docs-filing/efiling.asp.* Commenters can submit brief comments up to 6,000 characters, without prior registration, using the eComment system at *http://www.ferc.gov/docs-filing/ecomment.asp.* You must include your name and contact information at the end of your comments. For assistance, please contact FERC Online Support at *FERCOnlineSupport@ferc.gov;* call toll-free at (866) 208–3676; or, for TTY, contact (202) 502–8659. Although the Commission strongly encourages electronic filing, documents may also be paper-filed. To paper-file, mail an original and seven copies to: Kimberly D. Bose, Secretary, Federal Energy Regulatory Commission, 888 First Street, NE., Washington, DC 20426.

More information about this project, including a copy of the application, can be viewed or printed on the "eLibrary" link of the Commission's Web site at *http://www.ferc.gov/docs-filing/elibrary.asp.* Enter the docket number (P–13854–000) in the docket number field to access the document. For assistance, contact FERC Online Support.

Dated: April 27, 2011.

Kimberly D. Bose,

Secretary.

[FR Doc. 2011–10743 Filed 5–3–11; 8:45 am]

BILLING CODE 6717–01–P

DEPARTMENT OF ENERGY

Federal Energy Regulatory Commission

Combined Notice of Filings

Take notice that the Commission has received the following Natural Gas Pipeline Rate and Refund Report filings:

Docket Numbers: RP11–2023–000.
Applicants: Transcontinental Gas Pipe Line Company, LLC.
Description: Transcontinental Gas Pipe Line Company, LLC submits tariff filing per 154.403: Annual Adjustment to Rate Schedule SS–2 Storage Gas Balances to be effective 5/1/2011.
Filed Date: 04/21/2011.
Accession Number: 20110421–5075.
Comment Date: 5 p.m. Eastern Time on Tuesday, May 03, 2011.

Docket Numbers: RP11–2024–000.
Applicants: Cheyenne Plains Gas Pipeline Company, L.L.C.
Description: Cheyenne Plains Gas Pipeline Company, L.L.C. submits tariff filing per 154.204: Pro Forma Update to be effective 6/1/2011.
Filed Date: 04/21/2011.
Accession Number: 20110421–5156.
Comment Date: 5 p.m. Eastern Time on Tuesday, May 03, 2011.

Docket Numbers: RP11–2025–000.
Applicants: Golden Pass Pipeline LLC.
Description: Petition of Golden Pass Pipeline LLC for Limited Waiver of Tariff.
Filed Date: 04/22/2011.
Accession Number: 20110422–5120.
Comment Date: 5 p.m. Eastern Time on Wednesday, May 04, 2011.

Docket Numbers: RP11–2026–000.
Applicants: Gulf South Pipeline Company, LP.
Description: Gulf South Pipeline Company, LP submits tariff filing per 154.204: Oneok to BG Energy 38624 Capacity Release Negotiated Rate Filing to be effective. 5/1/2011.
Filed Date: 04/25/2011.
Accession Number: 20110425–5104.
Comment Date: 5 p.m. Eastern Time on Monday, May 09, 2011.

Docket Numbers: RP11–2027–000.
Applicants: Blue Lake Gas Storage Company.
Description: Blue Lake Gas Storage Company submits tariff filing per 154.203: Operational Purchases and Sales Report 2010 to be effective N/A.
Filed Date: 04/25/2011.
Accession Number: 20110425–5179.
Comment Date: 5 p.m. Eastern Time on Monday, May 09, 2011.

Docket Numbers: RP11–2028–000.
Applicants: Transcontinental Gas Pipe Line Company, LLC.
Description: Transcontinental Gas Pipe Line Company, LLC submits tariff filing per 154.203: Revised Rate Schedule WSS–Open Access to be effective 5/1/2011.
Filed Date: 04/26/2011.
Accession Number: 20110426–5041.
Comment Date: 5 p.m. Eastern Time on Monday, May 09, 2011.

Docket Numbers: RP11–2029–000.
Applicants: Columbia Gas Transmission, LLC.
Description: Columbia Gas Transmission, LLC submits tariff filing per 154.204: Negotiated Rate Service Agreement—ODEC to be effective 5/1/2011.
Filed Date: 04/26/2011.
Accession Number: 20110426–5042.
Comment Date: 5 p.m. Eastern Time on Monday, May 09, 2011.

Docket Numbers: RP11–2030–000.

Applicants: Trailblazer Pipeline Company LLC.
Description: Penalty Revenue Crediting Report of Trailblazer Pipeline Company LLC.
Filed Date: 04/26/2011.
Accession Number: 20110426–5049.
Comment Date: 5 p.m. Eastern Time on Monday, May 09, 2011.

Docket Numbers: RP11–2031–000.
Applicants: Kern River Gas Transmission Company.
Description: Kern River Gas Transmission Company submits tariff filing per 154.204: 2011 Transition Procedures to be effective 5/27/2011.
Filed Date: 04/26/2011.
Accession Number: 20110426–5135.
Comment Date: 5 p.m. Eastern Time on Monday, May 09, 2011.

Docket Numbers: RP11–2032–000.
Applicants: Northern Border Pipeline Company.
Description: Northern Border Pipeline Company submits tariff filing per 154.203: Operational Purchases and Sales Report 2010 to be effective N/A.
Filed Date: 04/26/2011.
Accession Number: 20110426–5139.
Comment Date: 5 p.m. Eastern Time on Monday, May 09, 2011.

Docket Numbers: RP11–2033–000.
Applicants: ANR Storage Company.
Description: ANR Storage Company submits tariff filing per 154.203: Operational Purchases and Sales Report 2010 to be effective N/A.
Filed Date: 04/26/2011.
Accession Number: 20110426–5142.
Comment Date: 5 p.m. Eastern Time on Monday, May 09, 2011.

Docket Numbers: RP11–2034–000.
Applicants: Great Lakes Gas Transmission Limited Partnership.
Description: Great Lakes Gas Transmission Limited Partnership submits tariff filing per 154.203: Operational Purchases and Sales Report 2010 to be effective N/A..
Filed Date: 04/26/2011.
Accession Number: 20110426–5146.
Comment Date: 5 p.m. Eastern Time on Monday, May 09, 2011.

Docket Numbers: RP11–2035–000.
Applicants: Kinder Morgan Interstate Gas Transmission LLC.
Description: Kinder Morgan Interstate Gas Transmission LLC submits tariff filing per 154.204: Negotiated Rate 2011–04–26 Mieco A&R to be effective 4/27/2011.
Filed Date: 04/26/2011.
Accession Number: 20110426–5182.
Comment Date: 5 p.m. Eastern Time on Monday, May 09, 2011.

Docket Numbers: RP11–2036–000.
Applicants: Natural Gas Pipeline Company of America LLC.
Description: Natural Gas Pipeline Company of America LLC submits tariff filing per 154.204: Wisconsin Electric's Negotiated Rate Agreements to be effective 4/26/2011.
Filed Date: 04/26/2011.
Accession Number: 20110426–5183
Comment Date: 5 p.m. Eastern Time on Monday, May 09, 2011.

Any person desiring to intervene or to protest in any of the above proceedings must file in accordance with Rules 211 and 214 of the Commission's Rules of Practice and Procedure (18 CFR 385.211 and 385.214) on or before 5 p.m. Eastern time on the specified comment date. It is not necessary to separately intervene again in a subdocket related to a compliance filing if you have previously intervened in the same docket. Protests will be considered by the Commission in determining the appropriate action to be taken, but will not serve to make protestants parties to the proceeding. Anyone filing a motion to intervene or protest must serve a copy of that document on the Applicant. In reference to filings initiating a new proceeding, interventions or protests submitted on or before the comment deadline need not be served on persons other than the Applicant.

The Commission encourages electronic submission of protests and interventions in lieu of paper, using the FERC Online links at *http://www.ferc.gov.* To facilitate electronic service, persons with Internet access who will eFile a document and/or be listed as a contact for an intervenor must create and validate an eRegistration account using the eRegistration link. Select the eFiling link to log on and submit the intervention or protests.

Persons unable to file electronically should submit an original and 14 copies of the intervention or protest to the Federal Energy Regulatory Commission, 888 First St., NE., Washington, DC 20426.

The filings in the above proceedings are accessible in the Commission's eLibrary system by clicking on the appropriate link in the above list. They are also available for review in the Commission's Public Reference Room in Washington, DC. There is an eSubscription link on the Web site that enables subscribers to receive e-mail notification when a document is added to a subscribed docket(s). For assistance with any FERC Online service, please e-mail *FERCOnlineSupport@ferc.gov* or call (866) 208–3676 (toll free). For TTY, call (202) 502–8659.

Dated: April 27, 2011.

Nathaniel J. Davis, Sr.,

Deputy Secretary.

[FR Doc. 2011–10822 Filed 5–3–11; 8:45 am]

BILLING CODE 6717–01–P

DEPARTMENT OF ENERGY

Federal Energy Regulatory Commission

Combined Notice of Filings #1

Take notice that the Commission received the following electric rate filings:

Docket Numbers: ER10–3247–003.
Applicants: Electric Energy, Inc.
Description: Electric Energy, Inc. submits tariff filing per 35: Baseline Tariff Revisions to Remove BREC Restriction to be effective 5/1/2011.
Filed Date: 04/27/2011.
Accession Number: 20110427–5042.
Comment Date: 5 p.m. Eastern Time on Wednesday, May 18, 2011.

Docket Numbers: ER11–3318–001.
Applicants: Woodway Energy Partners, LLC.
Description: Woodway Energy Partners, LLC submits tariff filing per 35.17(b): Amendment to Petition to be effective 6/7/2011.
Filed Date: 04/27/2011.
Accession Number: 20110427–5061.
Comment Date: 5 p.m. Eastern Time on Wednesday, May 18, 2011.

Docket Numbers: ER11–3435–000.
Applicants: Alabama Power Company.
Description: Alabama Power Company submits tariff filing per 35.13(a)(2)(iii: Leaf River NITSA Amendment Filing to Remove Delivery Points to be effective 4/1/2011.
Filed Date: 04/26/2011.
Accession Number: 20110426–5173.
Comment Date: 5 p.m. Eastern Time on Tuesday, May 17, 2011.

Docket Numbers: ER11–3436–000.
Applicants: Florida Power Corporation.
Description: Florida Power Corporation submits tariff filing per 35.13(a)(2)(iii: Rate Schedule No. 80 of Florida Power Corporation to be effective 3/1/2011.
Filed Date: 04/27/2011.
Accession Number: 20110427–5036.
Comment Date: 5 p.m. Eastern Time on Wednesday, May 18, 2011.

Docket Numbers: ER11–3437–000.
Applicants: Central Vermont Public Service Corp.
Description: Central Vermont Public Service Corporation, Notice of Cancellation of Service Agreements.

Filed Date: 04/27/2011.
Accession Number: 20110427–5116.
Comment Date: 5 p.m. Eastern Time on Wednesday, May 18, 2011.

Take notice that the Commission received the following electric securities filings:

Docket Numbers: ES11–24–000.
Applicants: Upper Peninsula Power Company.
Description: Upper Peninsula Power Company Application for Renewed Authorization to Issue Short-Term Debt.
Filed Date: 04/27/2011.
Accession Number: 20110427–5121.
Comment Date: 5 p.m. Eastern Time on Wednesday, May 18, 2011.

Any person desiring to intervene or to protest in any of the above proceedings must file in accordance with Rules 211 and 214 of the Commission's Rules of Practice and Procedure (18 CFR 385.211 and 385.214) on or before 5 p.m. Eastern time on the specified comment date. It is not necessary to separately intervene again in a subdocket related to a compliance filing if you have previously intervened in the same docket. Protests will be considered by the Commission in determining the appropriate action to be taken, but will not serve to make protestants parties to the proceeding. Anyone filing a motion to intervene or protest must serve a copy of that document on the Applicant. In reference to filings initiating a new proceeding, interventions or protests submitted on or before the comment deadline need not be served on persons other than the Applicant.

As it relates to any qualifying facility filings, the notices of self-certification [or self-recertification] listed above, do not institute a proceeding regarding qualifying facility status. A notice of self-certification [or self-recertification] simply provides notification that the entity making the filing has determined the facility named in the notice meets the applicable criteria to be a qualifying facility. Intervention and/or protest do not lie in dockets that are qualifying facility self-certifications or self-recertifications. Any person seeking to challenge such qualifying facility status may do so by filing a motion pursuant to 18 CFR 292.207(d)(iii). Intervention and protests may be filed in response to notices of qualifying facility dockets other than self-certifications and self-recertifications.

The Commission encourages electronic submission of protests and interventions in lieu of paper, using the FERC Online links at *http://www.ferc.gov.* To facilitate electronic service, persons with Internet access who will eFile a document and/or be listed as a contact for an intervenor must create and validate an eRegistration account using the eRegistration link. Select the eFiling link to log on and submit the intervention or protests.

Persons unable to file electronically should submit an original and 14 copies of the intervention or protest to the Federal Energy Regulatory Commission, 888 First St., NE., Washington, DC 20426.

The filings in the above proceedings are accessible in the Commission's eLibrary system by clicking on the appropriate link in the above list. They are also available for review in the Commission's Public Reference Room in Washington, DC. There is an eSubscription link on the Web site that enables subscribers to receive e-mail notification when a document is added to a subscribed docket(s). For assistance with any FERC Online service, please e-mail *FERCOnlineSupport@ferc.gov* or call (866) 208–3676 (toll free). For TTY, call (202) 502–8659.

Dated: April 27, 2011.

Nathaniel J. Davis, Sr.,

Deputy Secretary.

[FR Doc. 2011–10826 Filed 5–3–11; 8:45 am]

BILLING CODE 6717–01–P

DEPARTMENT OF ENERGY

Federal Energy Regulatory Commission

Combined Notice of Filings #2

Take notice that the Commission received the following exempt wholesale generator filings:

Docket Numbers: EG11–80–000.
Applicants: Bayonne Energy Center, LLC.
Description: Notice of Self-Certification of Exempt Wholesale Generator, Status of Bayonne Energy Center, LLC.
Filed Date: 04/28/2011.
Accession Number: 20110428–5329.
Comment Date: 5 p.m. Eastern Time on Thursday, May 19, 2011.

Take notice that the Commission received the following electric rate filings:

Docket Numbers: ER11–3450–000.
Applicants: Southwest Power Pool, Inc.
Description: Southwest Power Pool, Inc. submits tariff filing per 35.13(a)(2)(iii: 2179 Sunflower to ITC Great Plains Novation to be effective 4/1/2011.
Filed Date: 04/28/2011.
Accession Number: 20110428–5302.
Comment Date: 5 p.m. Eastern Time on Thursday, May 19, 2011.

Docket Numbers: ER11–3451–000.
Applicants: Southwest Power Pool, Inc.
Description: Southwest Power Pool, Inc. submits tariff filing per 35.13(a)(2)(iii: 2180 Mid-Kansas Electric to ITC Great Plains Novation to be effective 4/1/2011.
Filed Date: 04/28/2011.
Accession Number: 20110428–5312.
Comment Date: 5 p.m. Eastern Time on Thursday, May 19, 2011.

Docket Numbers: ER11–3452–000.
Applicants: Southwest Power Pool, Inc.
Description: Southwest Power Pool, Inc. submits tariff filing per 35.13(a)(2)(iii: 2181 Mid-Kansas Electric Company, LLC to Prairie Wind Transmission Novation to be effective 4/1/2011.
Filed Date: 04/28/2011.
Accession Number: 20110428–5318.
Comment Date: 5 p.m. Eastern Time on Thursday, May 19, 2011.

Docket Numbers: ER11–3453–000.
Applicants: Southwest Power Pool, Inc.
Description: Southwest Power Pool, Inc. submits tariff filing per 35.13(a)(2)(iii: 2182 Westar and Mid-Kansas Electric Co. to Prairie Wind Transmission Novation to be effective 4/1/2011.
Filed Date: 04/28/2011.
Accession Number: 20110428–5322.
Comment Date: 5 p.m. Eastern Time on Thursday, May 19, 2011.

Docket Numbers: ER11–3454–000.
Applicants: PJM Interconnection, L.L.C.
Description: PJM Interconnection, L.L.C. in compliance with Section 5.2.2 (e) of Attachment K—Appendix PJM Tariff/Schedule 1 Operating Agreement the initial allocation of FTRs for the ATSI Zone for the period June 1, 2011 to May 31, 2012.
Filed Date: 04/28/2011.
Accession Number: 20110428–5332.
Comment Date: 5 p.m. Eastern Time on Thursday, May 19, 2011.

Docket Numbers: ER11–3455–000.
Applicants: Southwest Power Pool, Inc.
Description: Southwest Power Pool, Inc. submits tariff filing per 35.13(a)(2)(iii: Incorporate Prairie Wind Transmission, LLC Formula Rate Template to be effective 4/1/2011.
Filed Date: 04/28/2011.
Accession Number: 20110428–5334.
Comment Date: 5 p.m. Eastern Time on Thursday, May 19, 2011.

Docket Numbers: ER11–3456–000.

Applicants: Alpha Gas and Electric LLC.

Description: Alpha Gas and Electric LLC submits tariff filing per 35.13(a)(2)(iii: Market based rate tariff database to be effective 4/29/2011.

Filed Date: 04/28/2011.

Accession Number: 20110428–5338.

Comment Date: 5 p.m. Eastern Time on Thursday, May 19, 2011.

Docket Numbers: ER11–3457–000.

Applicants: Northern Renewable Energy (USA) Ltd.

Description: Notice of Cancellation of Market-Based Rate FERC Electric Tariff of Northern Renewable Energy (USA) Ltd.

Filed Date: 04/28/2011.

Accession Number: 20110428–5340.

Comment Date: 5 p.m. Eastern Time on Thursday, May 19, 2011.

Docket Numbers: ER11–3458–000.

Applicants: Northern States Power Company, a Wisconsin corporation.

Description: Northern States Power Company, a Wisconsin corporation submits tariff filing per 35.13(a)(2)(iii: 295–NSPW Pole License Agreement to be effective 4/28/2011.

Filed Date: 04/28/2011.

Accession Number: 20110428–5350.

Comment Date: 5 p.m. Eastern Time on Thursday, May 19, 2011.

Any person desiring to intervene or to protest in any of the above proceedings must file in accordance with Rules 211 and 214 of the Commission's Rules of Practice and Procedure (18 CFR 385.211 and 385.214) on or before 5 p.m. Eastern time on the specified comment date. It is not necessary to separately intervene again in a subdocket related to a compliance filing if you have previously intervened in the same docket. Protests will be considered by the Commission in determining the appropriate action to be taken, but will not serve to make protestants parties to the proceeding. Anyone filing a motion to intervene or protest must serve a copy of that document on the Applicant. In reference to filings initiating a new proceeding, interventions or protests submitted on or before the comment deadline need not be served on persons other than the Applicant.

As it relates to any qualifying facility filings, the notices of self-certification [or self-recertification] listed above, do not institute a proceeding regarding qualifying facility status. A notice of self-certification [or self-recertification] simply provides notification that the entity making the filing has determined the facility named in the notice meets the applicable criteria to be a qualifying facility. Intervention and/or protest do not lie in dockets that are qualifying facility self-certifications or self-recertifications. Any person seeking to challenge such qualifying facility status may do so by filing a motion pursuant to 18 CFR 292.207(d)(iii). Intervention and protests may be filed in response to notices of qualifying facility dockets other than self-certifications and self-recertifications.

The Commission encourages electronic submission of protests and interventions in lieu of paper, using the FERC Online links at *http://www.ferc.gov.* To facilitate electronic service, persons with Internet access who will eFile a document and/or be listed as a contact for an intervenor must create and validate an eRegistration account using the eRegistration link. Select the eFiling link to log on and submit the intervention or protests.

Persons unable to file electronically should submit an original and 14 copies of the intervention or protest to the Federal Energy Regulatory Commission, 888 First St., NE., Washington, DC 20426.

The filings in the above proceedings are accessible in the Commission's eLibrary system by clicking on the appropriate link in the above list. They are also available for review in the Commission's Public Reference Room in Washington, DC. There is an eSubscription link on the Web site that enables subscribers to receive e-mail notification when a document is added to a subscribed docket(s). For assistance with any FERC Online service, please e-mail *FERCOnlineSupport@ferc.gov* or call (866) 208–3676 (toll free). For TTY, call (202) 502–8659.

Dated: April 28, 2011.

Nathaniel J. Davis, Sr.,

Deputy Secretary.

[FR Doc. 2011–10828 Filed 5–3–11; 8:45 am]

BILLING CODE 6717–01–P

DEPARTMENT OF ENERGY

Federal Energy Regulatory Commission

Combined Notice of Filings

Take notice that the Commission has received the following Natural Gas Pipeline Rate and Refund Report filings:

Docket Numbers: RP11–2037–000.

Applicants: Kinder Morgan Interstate Gas Transmission LLC.

Description: Kinder Morgan Interstate Gas Transmission LLC submits tariff filing per 154.204: Negotiated Rate 2011–04–27 CIMA Energy, LTD, to be effective 5/1/2011.

Filed Date: 04/27/2011.

Accession Number: 20110427–5094.

Comment Date: 5 p.m. Eastern Time on Monday, May 9, 2011.

Docket Numbers: RP11–2038–000.

Applicants: Rockies Express Pipeline LLC.

Description: Rockies Express Pipeline LLC submits tariff filing per 154.204: Negotiated Rate 2011–04–27 BP to be effective 5/1/2011.

Filed Date: 04/27/2011.

Accession Number: 20110427–5095.

Comment Date: 5 p.m. Eastern Time on Monday, May 9, 2011.

Docket Numbers: RP11–2039–000.

Applicants: Southern Star Central Gas Pipeline, Inc.

Description: Southern Star Central Gas Pipeline, Inc. submits tariff filing per 154.204: Maps Update Filing 2011 to be effective 6/1/2011.

Filed Date: 04/27/2011.

Accession Number: 20110427–5113.

Comment Date: 5 p.m. Eastern Time on Monday, May 9, 2011.

Docket Numbers: RP11–2040–000.

Applicants: Discovery Gas Transmission LLC.

Description: Imbalance Cash-out Report of Discovery Gas Transmission LLC for 2010.

Filed Date: 04/27/2011.

Accession Number: 20110427–5118.

Comment Date: 5 p.m. Eastern Time on Monday, May 9, 2011.

Docket Numbers: RP11–2041–000.

Applicants: Equitrans, L.P.

Description: Equitrans, L.P. submits tariff filing per 154.204: Revision to Form of Service Agreement Exhibit A for Rate Schedule 115SS and 60SS to be effective 5/27/2011.

Filed Date: 04/27/2011.

Accession Number: 20110427–5169.

Comment Date: 5 p.m. Eastern Time on Monday, May 9, 2011.

Docket Numbers: RP11–2042–000.

Applicants: Gulf South Pipeline Company, LP.

Description: Gulf South Pipeline Company, LP submits tariff filing per 154.204: HK to Sequent 38577, 38224 Capacity Release Negotiated Rate Filing to be effective 5/1/2011.

Filed Date: 04/27/2011.

Accession Number: 20110427–5183.

Comment Date: 5 p.m. Eastern Time on Monday, May 9, 2011.

Docket Numbers: RP11–2043–000.

Applicants: Gulf South Pipeline Company, LP.

Description: Gulf South Pipeline Company, LP submits tariff filing per 154.204: Enerquest to Sequent 38756 Negotiated Rate Capacity Release Agreement to be effective 5/1/2011.

Filed Date: 04/27/2011.

Accession Number: 20110427–5184.
Comment Date: 5 p.m. Eastern Time on Monday, May 9, 2011.

Docket Numbers: RP11–2044–000.
Applicants: Carolina Gas Transmission Corporation.
Description: Carolina Gas Transmission Corporation submits tariff filing per 154.204: Gas Quality Tariff Revision and Misc Tariff Changes to be effective 4/27/2011.
Filed Date: 04/27/2011.
Accession Number: 20110427–5219.
Comment Date: 5 p.m. Eastern Time on Monday, May 9, 2011.

Docket Numbers: RP11–2045–000.
Applicants: North Baja Pipeline, LLC.
Description: North Baja Pipeline, LLC submits tariff filing per 154.204: Maps 2011 to be effective 6/1/2011.
Filed Date: 04/27/2011.
Accession Number: 20110427–5252.
Comment Date: 5 p.m. Eastern Time on Monday, May 09, 2011.

Docket Numbers: RP11–2046–000.
Applicants: Tuscarora Gas Transmission Company.
Description: Tuscarora Gas Transmission Company submits tariff filing per 154.204: Maps 2011 to be effective 6/1/2011.
Filed Date: 04/27/2011.
Accession Number: 20110427–5253.
Comment Date: 5 p.m. Eastern Time on Monday, May 9, 2011.

Docket Numbers: RP11–2047–000.
Applicants: ANR Pipeline Company.
Description: ANR Pipeline Company submits tariff filing per 154.204: Maps 2011 to be effective 6/1/2011.
Filed Date: 04/27/2011.
Accession Number: 20110427–5254.
Comment Date: 5 p.m. Eastern Time on Monday, May 9, 2011.

Docket Numbers: RP11–2048–000.
Applicants: Texas Gas Transmission, LLC.
Description: Texas Gas Transmission, LLC submits tariff filing per 154.204: Update System Maps to be effective 6/1/2011.
Filed Date: 04/28/2011.
Accession Number: 20110428–5125.
Comment Date: 5 p.m. Eastern Time on Tuesday, May 10, 2011.

Docket Numbers: RP11–2049–000.
Applicants: Gulf Crossing Pipeline Company LLC.
Description: Gulf Crossing Pipeline Company LLC submits tariff filing per 154.204: Antero 2 to Tenaska 201 Capacity Release Negotiated Rate Agreement to be effective 5/1/2011.
Filed Date: 04/28/2011.
Accession Number: 20110428–5153.
Comment Date: 5 p.m. Eastern Time on Tuesday, May 10, 2011.

Docket Numbers: RP11–2050–000.
Applicants: Gulf Crossing Pipeline Company LLC.
Description: Gulf Crossing Pipeline Company LLC submits tariff filing per 154.204: Newfield 18 to Tenaska 202 Capacity Release Negotiated Rate Agreement to be effective 5/1/2011.
Filed Date: 04/28/2011.
Accession Number: 20110428–5154.
Comment Date: 5 p.m. Eastern Time on Tuesday, May 10, 2011.

Any person desiring to intervene or to protest in any of the above proceedings must file in accordance with Rules 211 and 214 of the Commission's Rules of Practice and Procedure (18 CFR 385.211 and 385.214) on or before 5 p.m. Eastern time on the specified comment date. It is not necessary to separately intervene again in a subdocket related to a compliance filing if you have previously intervened in the same docket. Protests will be considered by the Commission in determining the appropriate action to be taken, but will not serve to make protestants parties to the proceeding. Anyone filing a motion to intervene or protest must serve a copy of that document on the Applicant. In reference to filings initiating a new proceeding, interventions or protests submitted on or before the comment deadline need not be served on persons other than the Applicant.

The Commission encourages electronic submission of protests and interventions in lieu of paper, using the FERC Online links at *http://www.ferc.gov.* To facilitate electronic service, persons with Internet access who will eFile a document and/or be listed as a contact for an intervenor must create and validate an eRegistration account using the eRegistration link. Select the eFiling link to log on and submit the intervention or protests.

Persons unable to file electronically should submit an original and 14 copies of the intervention or protest to the Federal Energy Regulatory Commission, 888 First St., NE., Washington, DC 20426.

The filings in the above proceedings are accessible in the Commission's eLibrary system by clicking on the appropriate link in the above list. They are also available for review in the Commission's Public Reference Room in Washington, DC. There is an eSubscription link on the Web site that enables subscribers to receive e-mail notification when a document is added to a subscribed docket(s). For assistance with any FERC Online service, please e-mail *FERCOnlineSupport@ferc.gov* or call (866) 208–3676 (toll free). For TTY, call (202) 502–8659.

Dated: April 28, 2011.

Nathaniel J. Davis, Sr.,

Deputy Secretary.

[FR Doc. 2011–10835 Filed 5–3–11; 8:45 am]

BILLING CODE 6717–01–P

DEPARTMENT OF ENERGY

Federal Energy Regulatory Commission

Combined Notice of Filings #1

Take notice that the Commission received the following exempt wholesale generator filings:

Docket Numbers: EG11–79–000.
Applicants: Gila River Energy Supply LLC.
Description: Gila River Energy Supply LLC's Notice Of Self-Certification of Exempt Wholesale Generator Status.
Filed Date: 04/27/2011.
Accession Number: 20110427–5236.
Comment Date: 5 p.m. Eastern Time on Wednesday, May 18, 2011.

Take notice that the Commission received the following electric rate filings:

Docket Numbers: ER10–3169–002.
Applicants: Michigan Power Limited Partnership.
Description: Michigan Power Limited Partnership submits tariff filing per 35: Michigan Power Limited Partnership Baseline Amendment to be effective 9/29/2010.
Filed Date: 04/27/2011.
Accession Number: 20110427–5222.
Comment Date: 5 p.m. Eastern Time on Wednesday, May 18, 2011.

Docket Numbers: ER11–2090–002.
Applicants: Duke Energy Hanging Rock II, LLC.
Description: Duke Energy Hanging Rock II, LLC submits tariff filing per 35: Compliance Filing Docket ER11–2090 to be effective 4/1/2011.
Filed Date: 04/27/2011.
Accession Number: 20110427–5193.
Comment Date: 5 p.m. Eastern Time on Wednesday, May 18, 2011.

Docket Numbers: ER11–2091–002.
Applicants: Duke Energy Washington II, LLC.
Description: Duke Energy Washington II, LLC submits tariff filing per 35: Compliance Filing Docket ER11–2091 to be effective 4/1/2011.
Filed Date: 04/27/2011.
Accession Number: 20110427–5172.
Comment Date: 5 p.m. Eastern Time on Wednesday, May 18, 2011.

Docket Numbers: ER11–2095–002.
Applicants: Duke Energy Fayette II, LLC.
Description: Duke Energy Fayette II, LLC submits tariff filing per 35:

Compliance Filing Docket ER11–2095 to be effective 4/1/2011.

Filed Date: 04/27/2011.

Accession Number: 20110427–5182.

Comment Date: 5 p.m. Eastern Time on Wednesday, May 18, 2011.

Docket Numbers: ER11–3438–000.

Applicants: Southwest Power Pool, Inc.

Description: Southwest Power Pool, Inc. submits tariff filing per 35.13(a)(2)(iii: Submission of Change to OG&E Pricing Zone Rate to be effective 1/1/2011.

Filed Date: 04/27/2011.

Accession Number: 20110427–5129.

Comment Date: 5 p.m. Eastern Time on Wednesday, May 18, 2011.

Docket Numbers: ER11–3439–000.

Applicants: Duke Energy Lee II, LLC.

Description: Duke Energy Lee II, LLC submits tariff filing per 35: Compliance Filing Docket ER11–2094 to be effective 4/1/2011.

Filed Date: 04/27/2011.

Accession Number: 20110427–5132.

Comment Date: 5 p.m. Eastern Time on Wednesday, May 18, 2011.

Docket Numbers: ER11–3440–000.

Applicants: Ohio Valley Electric Corporation.

Description: Ohio Valley Electric Corporation submits tariff filing per 35.15: Cancellation of ICPA and OVEC–IKEC to be effective 5/23/2011.

Filed Date: 04/27/2011.

Accession Number: 20110427–5146.

Comment Date: 5 p.m. Eastern Time on Wednesday, May 18, 2011.

Docket Numbers: ER11–3441–000.

Applicants: Ohio Valley Electric Corporation.

Description: Ohio Valley Electric Corporation submits tariff filing per 35.1: Power Agreements to be effective 5/23/2011.

Filed Date: 04/27/2011.

Accession Number: 20110427–5153.

Comment Date: 5 p.m. Eastern Time on Wednesday, May 18, 2011.

Docket Numbers: ER11–3442–000.

Applicants: Southwestern Public Service Company.

Description: Southwestern Public Service Company submits tariff filing per 35.13(a)(2)(iii: 4–27–11_RS102 SPS–PNM to be effective 7/16/2010.

Filed Date: 04/27/2011.

Accession Number: 20110427–5155.

Comment Date: 5 p.m. Eastern Time on Wednesday, May 18, 2011.

Docket Numbers: ER11–3443–000.

Applicants: UNS Electric, Inc.

Description: UNS Electric, Inc. submits tariff filing per 35.13(a)(2)(iii: Amendment to SGIA of UNSE to be effective 4/28/2011.

Filed Date: 04/27/2011.

Accession Number: 20110427–5213.

Comment Date: 5 p.m. Eastern Time on Wednesday, May 18, 2011.

Docket Numbers: ER11–3444–000.

Applicants: Tucson Electric Power Company.

Description: Tucson Electric Power Company submits tariff filing per 35.13(a)(2)(iii: Amendment to SGIA and LGIA of Tucson Electric Power Company to be effective 4/28/2011.

Filed Date: 04/27/2011.

Accession Number: 20110427–5218.

Comment Date: 5 p.m. Eastern Time on Wednesday, May 18, 2011.

Docket Numbers: ER11–3445–000.

Applicants: PJM Interconnection, L.L.C.

Description: PJM Interconnection, L.L.C. submits tariff filing per 35: Compliance Filing in Docket No. ER11–12–001 to be effective N/A.

Filed Date: 04/27/2011.

Accession Number: 20110427–5248.

Comment Date: 5 p.m. Eastern Time on Wednesday, May 18, 2011.

Docket Numbers: ER11–3446–000.

Applicants: Cleco Power LLC.

Description: Cleco Power LLC submits tariff filing per 35.13(a)(2)(iii: SA 125 Entergy CIAC to be effective 4/4/2011.

Filed Date: 04/28/2011.

Accession Number: 20110428–5067.

Comment Date: 5 p.m. Eastern Time on Thursday, May 19, 2011.

Docket Numbers: ER11–3447–000.

Applicants: Alpha Gas and Electric LLC.

Description: Alpha Gas and Electric LLC submits tariff filing per 35.13(a)(2)(iii: Market based rate tariff database to be effective 4/29/2011.

Filed Date: 04/28/2011.

Accession Number: 20110428–5097.

Comment Date: 5 p.m. Eastern Time on Thursday, May 19, 2011.

Docket Numbers: ER11–3448–000.

Applicants: California Power Exchange Corporation.

Description: California Power Exchange Corporation submits tariff filing per 35.13(a)(2)(iii: California Power Exchange FERC Rate Schedule No. 1 for Rate Period 19 to be effective 7/1/2011.

Filed Date: 04/28/2011.

Accession Number: 20110428–5230.

Comment Date: 5 p.m. Eastern Time on Thursday, May 19, 2011.

Docket Numbers: ER11–3449–000.

Applicants: Midwest Independent Transmission System, Ameren Illinois Company.

Description: Midwest Independent Transmission System Operator, Inc. submits tariff filing per 35.13(a)(2)(iii: Ameren-Dynegy-Pana Trans Upgrade to be effective 4/30/2011.

Filed Date: 04/28/2011.

Accession Number: 20110428–5250.

Comment Date: 5 p.m. Eastern Time on Thursday, May 19, 2011.

Take notice that the Commission received the following land acquisition reports:

Docket Numbers: LA11–1–000.

Applicants: Eurus Energy America Corporation.

Description: Eurus Energy America Corporation Report of Site Control and Request for Waiver.

Filed Date: 04/28/2011.

Accession Number: 20110428–5199.

Comment Date: 5 p.m. Eastern Time on Thursday, May 19, 2011.

Any person desiring to intervene or to protest in any of the above proceedings must file in accordance with Rules 211 and 214 of the Commission's Rules of Practice and Procedure (18 CFR 385.211 and 385.214) on or before 5 p.m. Eastern time on the specified comment date. It is not necessary to separately intervene again in a subdocket related to a compliance filing if you have previously intervened in the same docket. Protests will be considered by the Commission in determining the appropriate action to be taken, but will not serve to make protestants parties to the proceeding. Anyone filing a motion to intervene or protest must serve a copy of that document on the Applicant. In reference to filings initiating a new proceeding, interventions or protests submitted on or before the comment deadline need not be served on persons other than the Applicant.

As it relates to any qualifying facility filings, the notices of self-certification [or self-recertification] listed above, do not institute a proceeding regarding qualifying facility status. A notice of self-certification [or self-recertification] simply provides notification that the entity making the filing has determined the facility named in the notice meets the applicable criteria to be a qualifying facility. Intervention and/or protest do not lie in dockets that are qualifying facility self-certifications or self-recertifications. Any person seeking to challenge such qualifying facility status may do so by filing a motion pursuant to 18 CFR 292.207(d)(iii). Intervention and protests may be filed in response to notices of qualifying facility dockets other than self-certifications and self-recertifications.

The Commission encourages electronic submission of protests and interventions in lieu of paper, using the FERC Online links at *http://www.ferc.gov.* To facilitate electronic

service, persons with Internet access who will eFile a document and/or be listed as a contact for an intervenor must create and validate an eRegistration account using the eRegistration link. Select the eFiling link to log on and submit the intervention or protests.

Persons unable to file electronically should submit an original and 14 copies of the intervention or protest to the Federal Energy Regulatory Commission, 888 First St., NE., Washington, DC 20426.

The filings in the above proceedings are accessible in the Commission's eLibrary system by clicking on the appropriate link in the above list. They are also available for review in the Commission's Public Reference Room in Washington, DC. There is an eSubscription link on the Web site that enables subscribers to receive e-mail notification when a document is added to a subscribed docket(s). For assistance with any FERC Online service, please e-mail *FERCOnlineSupport@ferc.gov* or call (866) 208–3676 (toll free). For TTY, call (202) 502–8659.

Dated: April 28, 2011.

Nathaniel J. Davis, Sr.,

Deputy Secretary.

[FR Doc. 2011–10827 Filed 5–3–11; 8:45 am]

BILLING CODE 6717–01–P

DEPARTMENT OF ENERGY

Federal Energy Regulatory Commission

[Docket No. PR11–84–002]

DCP Guadalupe Pipeline, LLC; Notice of Compliance Filing

Take notice that on April 27, 2011, DCP Guadalupe Pipeline, LLC (Guadalupe) filed a revised Statement of Operating Conditions for Transportation Services (SOC) to comply with an April 26, 2011, unpublished Director letter order, as more fully described in the filing.

Any person desiring to participate in this rate filing must file in accordance with Rules 211 and 214 of the Commission's Rules of Practice and Procedure (18 CFR 385.211 and 385.214). Protests will be considered by the Commission in determining the appropriate action to be taken, but will not serve to make protestants parties to the proceeding. Any person wishing to become a party must file a notice of intervention or motion to intervene, as appropriate. Such notices, motions, or protests must be filed on or before the date as indicated below. Anyone filing an intervention or protest must serve a copy of that document on the Applicant. Anyone filing an intervention or protest on or before the intervention or protest date need not serve motions to intervene or protests on persons other than the Applicant.

The Commission encourages electronic submission of protests and interventions in lieu of paper using the "eFiling" link at *http://www.ferc.gov.* Persons unable to file electronically should submit an original and 7 copies of the protest or intervention to the Federal Energy Regulatory Commission, 888 First Street, NE., Washington, DC 20426.

This filing is accessible on-line at *http://www.ferc.gov,* using the "eLibrary" link and is available for review in the Commission's Public Reference Room in Washington, DC. There is an "eSubscription" link on the Web site that enables subscribers to receive e-mail notification when a document is added to a subscribed docket(s). For assistance with any FERC Online service, please e-mail *FERCOnlineSupport@ferc.gov,* or call (866) 208–3676 (toll free). For TTY, call (202) 502–8659.

Comment Date: 5 p.m. Eastern Time on Monday, May 9, 2011.

Dated: April 28, 2011.

Kimberly D. Bose,

Secretary.

[FR Doc. 2011–10836 Filed 5–3–11; 8:45 am]

BILLING CODE 6717–01–P

DEPARTMENT OF ENERGY

Federal Energy Regulatory Commission

[Docket No. PR11–105–000]

Worsham-Steed Gas Storage, LLC; Notice of Filing

Take notice that on April 27, 2011, Worsham-Steed Gas Storage, LLC (Worsham-Steed) filed pursuant to section 284.123(e) of the Commission's regulations, a revised Statement of Operating Conditions for Gas Storage and Transportation Services provided under section 311 of the Natural Gas Policy Act of 1978 ("NGPA"). Worsham-Steed states it is filing to reflect its name change and to consolidate various firm and interruptible storage and transportation services into more concise rate schedules and services, as more fully described in the filing.

Any person desiring to participate in this rate filing must file in accordance with Rules 211 and 214 of the Commission's Rules of Practice and Procedure (18 CFR 385.211 and 385.214). Protests will be considered by the Commission in determining the appropriate action to be taken, but will not serve to make protestants parties to the proceeding. Any person wishing to become a party must file a notice of intervention or motion to intervene, as appropriate. Such notices, motions, or protests must be filed on or before the date as indicated below. Anyone filing an intervention or protest must serve a copy of that document on the Applicant. Anyone filing an intervention or protest on or before the intervention or protest date need not serve motions to intervene or protests on persons other than the Applicant.

The Commission encourages electronic submission of protests and interventions in lieu of paper using the "eFiling" link at *http://www.ferc.gov.* Persons unable to file electronically should submit an original and 7 copies of the protest or intervention to the Federal Energy Regulatory Commission, 888 First Street, NE., Washington, DC 20426.

This filing is accessible on-line at *http://www.ferc.gov,* using the "eLibrary" link and is available for review in the Commission's Public Reference Room in Washington, DC. There is an "eSubscription" link on the Web site that enables subscribers to receive e-mail notification when a document is added to a subscribed docket(s). For assistance with any FERC Online service, please e-mail *FERCOnlineSupport@ferc.gov,* or call (866) 208–3676 (toll free). For TTY, call (202) 502–8659.

Comment Date: 5 p.m. Eastern Time on Monday, May 9, 2011.

Dated: April 28, 2011.

Kimberly D. Bose,

Secretary.

[FR Doc. 2011–10837 Filed 5–3–11; 8:45 am]

BILLING CODE 6717–01–P

DEPARTMENT OF ENERGY

Federal Energy Regulatory Commission

[Docket No. ER11–3431–000]

New Mexico Green Initiatives, LLC; Supplemental Notice That Initial Market-Based Rate Filing Includes Request for Blanket Section 204 Authorization

This is a supplemental notice in the above-referenced proceeding of New Mexico Green Initiatives, LLC's application for market-based rate authority, with an accompanying rate

tariff, noting that such application includes a request for blanket authorization, under 18 CFR part 34, of future issuances of securities and assumptions of liability.

Any person desiring to intervene or to protest should file with the Federal Energy Regulatory Commission, 888 First Street, NE., Washington, DC 20426, in accordance with Rules 211 and 214 of the Commission's Rules of Practice and Procedure (18 CFR 385.211 and 385.214). Anyone filing a motion to intervene or protest must serve a copy of that document on the Applicant.

Notice is hereby given that the deadline for filing protests with regard to the applicant's request for blanket authorization, under 18 CFR part 34, of future issuances of securities and assumptions of liability, is May 17, 2011.

The Commission encourages electronic submission of protests and interventions in lieu of paper, using the FERC online links at *http://www.ferc.gov.* To facilitate electronic service, persons with Internet access who will eFile a document and/or be listed as a contact for an intervenor must create and validate an eRegistration account using the eRegistration link. Select the eFiling link to log on and submit the intervention or protests.

Persons unable to file electronically should submit an original and 14 copies of the intervention or protest to the Federal Energy Regulatory Commission, 888 First Street, NE., Washington, DC 20426.

The filings in the above-referenced proceeding are accessible in the Commission's eLibrary system by clicking on the appropriate link in the above list. They are also available for review in the Commission's Public Reference Room in Washington, DC. There is an eSubscription link on the Web site that enables subscribers to receive e-mail notification when a document is added to a subscribed docket(s). For assistance with any FERC online service, please e-mail *FERCOnlineSupport@ferc.gov* or call (866) 208–3676 (toll free). For TTY, call (202) 502–8659.

Dated: April 27, 2011.

Nathaniel J. Davis, Sr.,

Deputy Secretary.

[FR Doc. 2011–10824 Filed 5–3–11; 8:45 am]

BILLING CODE 6717–01–P

DEPARTMENT OF ENERGY

Federal Energy Regulatory Commission

[Docket No. ER11–3420–000]

Gridway Energy Corp.; Supplemental Notice That Initial Market-Based Rate Filing Includes Request for Blanket Section 204 Authorization

This is a supplemental notice in the above-referenced proceeding of Gridway Energy Corp.'s application for market-based rate authority, with an accompanying rate tariff, noting that such application includes a request for blanket authorization, under 18 CFR Part 34, of future issuances of securities and assumptions of liability.

Any person desiring to intervene or to protest should file with the Federal Energy Regulatory Commission, 888 First Street, NE., Washington, DC 20426, in accordance with Rules 211 and 214 of the Commission's Rules of Practice and Procedure (18 CFR 385.211 and 385.214). Anyone filing a motion to intervene or protest must serve a copy of that document on the Applicant.

Notice is hereby given that the deadline for filing protests with regard to the applicant's request for blanket authorization, under 18 CFR part 34, of future issuances of securities and assumptions of liability, is May 17, 2011.

The Commission encourages electronic submission of protests and interventions in lieu of paper, using the FERC online links at *http://www.ferc.gov.* To facilitate electronic service, persons with Internet access who will eFile a document and/or be listed as a contact for an intervenor must create and validate an eRegistration account using the eRegistration link. Select the eFiling link to log on and submit the intervention or protests.

Persons unable to file electronically should submit an original and 14 copies of the intervention or protest to the Federal Energy Regulatory Commission, 888 First Street, NE., Washington, DC 20426.

The filings in the above-referenced proceeding are accessible in the Commission's eLibrary system by clicking on the appropriate link in the above list. They are also available for review in the Commission's Public Reference Room in Washington, DC. There is an eSubscription link on the Web site that enables subscribers to receive e-mail notification when a document is added to a subscribed docket(s). For assistance with any FERC Online service, please e-mail *FERCOnlineSupport@ferc.gov* or call (866) 208–3676 (toll free). For TTY, call (202) 502–8659.

Dated: April 27, 2011.

Nathaniel J. Davis, Sr.,

Deputy Secretary.

[FR Doc. 2011–10825 Filed 5–3–11; 8:45 am]

BILLING CODE 6717–01–P

DEPARTMENT OF ENERGY

Federal Energy Regulatory Commission

[Docket No. ER11–3432–000]

Torofino Physical Trading LLC; Supplemental Notice That Initial Market-Based Rate Filing Includes Request for Blanket Section 204 Authorization

This is a supplemental notice in the above-referenced proceeding of Torofino Physical Trading LLC's application for market-based rate authority, with an accompanying rate tariff, noting that such application includes a request for blanket authorization, under 18 CFR part 34, of future issuances of securities and assumptions of liability.

Any person desiring to intervene or to protest should file with the Federal Energy Regulatory Commission, 888 First Street, NE., Washington, DC 20426, in accordance with Rules 211 and 214 of the Commission's Rules of Practice and Procedure (18 CFR 385.211 and 385.214). Anyone filing a motion to intervene or protest must serve a copy of that document on the Applicant.

Notice is hereby given that the deadline for filing protests with regard to the applicant's request for blanket authorization, under 18 CFR part 34, of future issuances of securities and assumptions of liability, is May 17, 2011.

The Commission encourages electronic submission of protests and interventions in lieu of paper, using the FERC online links at *http://www.ferc.gov.* To facilitate electronic service, persons with Internet access who will eFile a document and/or be listed as a contact for an intervenor must create and validate an eRegistration account using the eRegistration link. Select the eFiling link to log on and submit the intervention or protests.

Persons unable to file electronically should submit an original and 14 copies of the intervention or protest to the Federal Energy Regulatory Commission, 888 First Street, NE., Washington, DC 20426.

The filings in the above-referenced proceeding are accessible in the

Commission's eLibrary system by clicking on the appropriate link in the above list. They are also available for review in the Commission's Public Reference Room in Washington, DC. There is an eSubscription link on the Web site that enables subscribers to receive e-mail notification when a document is added to a subscribed docket(s). For assistance with any FERC online service, please e-mail *FERCOnlineSupport@ferc.gov* or call (866) 208–3676 (toll free). For TTY, call (202) 502–8659.

Dated: April 27, 2011.

Nathaniel J. Davis, Sr.,

Deputy Secretary.

[FR Doc. 2011–10823 Filed 5–3–11; 8:45 am]

BILLING CODE 6717–01–P

DEPARTMENT OF ENERGY

Federal Energy Regulatory Commission

Georgia Power Company; Project No. 485–063—Georgia and Alabama, Bartletts Ferry Hydroelectric Project; Notice of Proposed Restricted Service List for a Programmatic Agreement

Rule 2010 of the Federal Energy Regulatory Commission's (Commission) Rules of Practice and Procedure, 18 CFR 385.2010, provides that, to eliminate unnecessary expense or improve administrative efficiency, the Secretary may establish a restricted service list for a particular phase or issue in a proceeding. The restricted service list should contain the names of persons on the service list who, in the judgment of the decisional authority establishing the list, are active participants with respect to the phase or issue in the proceeding for which the list is established.

The Commission staff is consulting with the Georgia State Historic Preservation Officer (SHPO), the Alabama SHPO, and the Advisory Council on Historic Preservation (Advisory Council) pursuant to the Advisory Council's regulations, 36 CFR Part 800, implementing section 106 of the National Historic Preservation Act, *as amended* (16 U.S.C. 470 f), to prepare a Programmatic Agreement for managing properties included in, or eligible for inclusion in, the National Register of Historic Places at the existing Bartletts Ferry Hydroelectric Project.

The Programmatic Agreement, when executed by the Commission, the Georgia SHPO, the Alabama SHPO, and the Advisory Council, would satisfy the Commission's section 106 responsibilities for all individual undertakings carried out in accordance with the license until the license expires or is terminated (36 CFR 800.13[e]). The Commission's responsibilities pursuant to section 106 for the project would be fulfilled through the Programmatic Agreement, which the Commission staff proposes to draft in consultation with certain parties listed below.

Georgia Power Company, as licensee for Project No. 485–063, is invited to participate in consultations to develop the Programmatic Agreement and to sign as a concurring party to the Programmatic Agreement. For purposes of commenting on the Programmatic Agreement, we propose to restrict the service list for Project No. 485–063 as follows:

John Fowler, Executive Director, The Old Post Office Building, Suite 803, 1100 Pennsylvania Avenue, NW., Washington, DC 20004.

Elizabeth Ann Brown, Deputy SHPO, Alabama Historical Commission, 468 South Perry Street, Montgomery, AL 36130–0900.

Amanda Hill or Representative, Alabama Historical Commission, 468 South Perry Street, Montgomery, AL 36130–0900.

Dr. David Crass, Director, Georgia Historic Preservation Division, 254 Washington Street, SW., Ground Level, Atlanta, GA 30334.

Elizabeth Shirk or Representative, Georgia Historic Preservation Division, 254 Washington Street, SW., Ground Level, Atlanta, GA 30334.

Ted Isham, George A. Martin, Emman Spain, Muscogee (Creek) Nation, P.O. Box 580, Okmulgee, OK 74447.

Advisory Council on Historic Preservation, Georgia Power Company, 241 Ralph McGill Boulevard, NE., Bin 10221, Atlanta, GA 30308.

Joey Charles, Georgia Power Company, 241 Ralph McGill Boulevard, NE., Bin 10151, Atlanta, GA 30308.

Henry Harjo, Kialegee Tribal Town, P.O. Box 332, Wetumka, OK 74883.

Bryant Celestine, THPO, Alabama-Coushatta Tribe of Texas, 571 State Park Road 56, Livingston, TX 77351.

Hallie M. Meushaw, Troutman Sanders LLP, Bank of America Plaza, 600 Peachtree Street, NE., Suite 5200, Atlanta, GA 30308–2216.

Any person on the official service list for the above-captioned proceeding may request inclusion on the restricted service list, or may request that a restricted service list not be established, by filing a motion to that effect within 15 days of this notice date. An original plus seven copies of any such motion must be filed with the Secretary of the Commission (888 First Street, NE., Washington, DC 20426) and must be served on each person whose name appears on the official service list. If no such motions are filed, the restricted service list will be effective at the end of the 15 day period. Otherwise, a further notice will be issued ruling on the motion.

Dated: April 28, 2011.

Kimberly D. Bose,

Secretary.

[FR Doc. 2011–10839 Filed 5–3–11; 8:45 am]

BILLING CODE 6717–01–P

DEPARTMENT OF ENERGY

Federal Energy Regulatory Commission

[Docket No. CP11–216–000]

Texas Eastern Transmission, LP; Notice of Request Under Blanket Authorization

Take notice that on April 18, 2011 Texas Eastern Transmission, LP (Texas Eastern), 5400 Westheimer Court, Houston, Texas 77056, filed in Docket No. CP11–216–000, a Prior Notice request pursuant to sections 157.205 and 157.216 of the Commission's Regulations under the Natural Gas Act for authorization to abandon in place, 7.1-miles of its 16-inch pipeline located in Federal waters in the Gulf of Mexico near Louisiana. The proposed abandonment will not result in the termination of any services to Texas Eastern's customers, all as more fully set forth in the application which is on file with the Commission and open to public inspection. The filing may also be viewed on the Web at *http://www.ferc.gov* using the "eLibrary" link. Enter the docket number excluding the last three digits in the docket number field to access the document. For assistance, contact FERC at *FERCOnlineSupport@ferc.gov* or call

toll-free, (866) 208–3676 or TTY, (202) 502–8659.

Any questions regarding this Application should be directed to Marcy Collins, Associate General Counsel, Texas Eastern Transmission, LP, P.O. Box 1642, Houston, Texas 77251, or call (713) 627–6137, or fax (713) 989–3191, or by *e-mail: mfcollins@spectraenergy.com.*

Any person may, within 60 days after the issuance of the instant notice by the Commission, file pursuant to Rule 214 of the Commission's Procedural Rules (18 CFR 385.214) a motion to intervene or notice of intervention. Any person filing to intervene or the Commission's staff may, pursuant to section 157.205 of the Commission's Regulations under the NGA (18 CFR 157.205) file a protest to the request. If no protest is filed within the time allowed therefore, the proposed activity shall be deemed to be authorized effective the day after the time allowed for protest. If a protest is filed and not withdrawn within 30 days after the time allowed for filing a protest, the instant request shall be treated as an application for authorization pursuant to section 7 of the NGA.

Persons who wish to comment only on the environmental review of this project should submit an original and two copies of their comments to the Secretary of the Commission. Environmental commenters will be placed on the Commission's environmental mailing list, will receive copies of the environmental documents, and will be notified of meetings associated with he Commission's environmental review process. Environmental commenters will not be required to serve copies of filed documents on all other parties. However, the non-party commentary will not receive copies of all documents filed by other parties or issued by the Commission (except for the mailing of environmental documents issued by the Commission) and will not have the right to seek court review of the Commission's final order.

The Commission strongly encourages electronic filings of comments, protests, and interventions via the Internet in lieu of paper. See 18 CFR 385.2001(a)(1)(iii) and the instructions on the Commission's Web site (*http://www.ferc.gov*) under the "e-Filing" link.

Dated: April 27, 2011.

Kimberly D. Bose,

Secretary.

[FR Doc. 2011–10744 Filed 5–3–11; 8:45 am]

BILLING CODE 6717–01–P

DEPARTMENT OF ENERGY

Federal Energy Regulatory Commission

[Docket No. CP11–208–000]

Williston Basin Interstate Pipeline Company; Notice of Request Under Blanket Authorization

Take notice that on April 15, 2011, Williston Basin Interstate Pipeline Company (Williston Basin) filed a prior notice request pursuant to section 157.210 of the Federal Energy Regulatory Commission's regulations under the Natural Gas Act and Williston Basin's blanket certificate issued in Docket No. CP82–487–000, *et al.,*[1] for the construction and operation of mainline natural gas compression facilities located at the Charbonneau Compressor Station in McKenzie County, North Dakota. Specifically, Williston Basin proposes to install one new natural gas fired 2,370 horsepower compressor unit and appurtenant facilities. Williston Basin states that the estimated cost to construct the facilities is approximately $3,030,000, all as more fully set forth in the application, which is open to the public for inspection. The filing may also be viewed on the Web at *http://www.ferc.gov* using the "eLibrary" link. Enter the docket number excluding the last three digits in the docket number field to access the document. For assistance, contact FERC at *FERCOnlineSupport@ferc.gov* or call toll-free, (866) 208–3676 or TTY, (202) 502–8659.

Any questions regarding this prior notice should be directed to Keith A. Tiggelaar, Director of Regulatory Affairs, Williston Basin Interstate Pipeline Company, 1250 West Century Avenue, Bismarck, North Dakota 58503, or telephone no. (701) 530–1560, or by e-mail *keith.tiggelaar@wbip.com.*

Any person may, within 60 days after the issuance of the instant notice by the Commission, file pursuant to Rule 214 of the Commission's Procedural Rules (18 CFR 385.214) a motion to intervene or notice of intervention. Any person filing to intervene or the Commission's staff may, pursuant to section 157.205 of the Commission's Regulations under the NGA (18 CFR 157.205) file a protest to the request. If no protest is filed within the time allowed therefore, the proposed activity shall be deemed to be authorized effective the day after the time allowed for protest. If a protest is filed and not withdrawn within 30 days after the time allowed for filing a protest, the instant request shall be treated as an application for authorization pursuant to section 7 of the NGA.

Persons who wish to comment only on the environmental review of this project should submit an original and two copies of their comments to the Secretary of the Commission. Environmental commenters will be placed on the Commission's environmental mailing list, will receive copies of the environmental documents, and will be notified of meetings associated with he Commission's environmental review process. Environmental commenters will not be required to serve copies of filed documents on all other parties. However, the non-party commentary will not receive copies of all documents filed by other parties or issued by the Commission (except for the mailing of environmental documents issued by the Commission) and will not have the right to seek court review of the Commission's final order.

The Commission strongly encourages electronic filings of comments, protests, and interventions via the Internet in lieu of paper. See 18 CFR 385.2001(a)(1)(iii) and the instructions on the Commission's Web site (*http://www.ferc.gov*) under the "e-Filing" link. Persons unable to file electronically should submit an original and 14 copies of the protest or intervention to the Federal Energy Regulatory Commission, 888 First Street, NE., Washington, DC 20426.

Comment Date: May 19, 2011.

Dated: April 28, 2011.

Kimberly D. Bose,

Secretary.

[FR Doc. 2011–10838 Filed 5–3–11; 8:45 am]

BILLING CODE 6717–01–P

[1] By the Commission's Order dated February 13, 1985 in Docket Nos. CP82–487–000, *et al.* (30 FERC ¶ 61,143), Williston Basin was authorized to acquire and operate the interstate pipeline facilities previously owned and operated by MDU Resources Group, Inc. (MDU), its parent company, as well as to provide the certificated service previously provided by MDU, effective January 1, 1985. MDU was originally granted blanket certificate authority in Docket Nos. CP83–1–000, *et al.*

ENVIRONMENTAL PROTECTION AGENCY

[EPA–HQ–SFUND–2011–0177; FRL–9301–8]

Agency Information Collection Activities; Proposed Collection; Comment Request; National Oil and Hazardous Substance Pollution Contingency Plan (NCP) (Renewal)

AGENCY: Environmental Protection Agency (EPA).

ACTION: Notice.

SUMMARY: In compliance with the Paperwork Reduction Act (PRA) (44 U.S.C. 3501 *et seq.*), this document announces that EPA is planning to submit a request to renew an existing approved Information Collection Request (ICR) to the Office of Management and Budget (OMB). This ICR is scheduled to expire on July 31, 2011. Before submitting the ICR to OMB for review and approval, EPA is soliciting comments on specific aspects of the proposed information collection as described below.

DATES: Comments must be submitted on or before July 5, 2011.

ADDRESSES: Submit your comments, identified by Docket ID No. EPA–HQ–SFUND–2011–0177, by one of the following methods:

- *http://www.regulations.gov:* Follow the on-line instructions for submitting comments.
- *E-mail: superfund.docket@epa.gov.*
- *Fax:* 202–566–9744.
- *Mail:* EPA Docket Center, Environmental Protection Agency, Superfund Docket, Mail Code 28221T, 1200 Pennsylvania Ave., NW., Washington, DC 20460.
- *Hand Delivery:* Superfund Docket, EPA West 3334, 1301 Constitution Ave., NW., Washington, DC 20004. Such deliveries are only accepted during the Docket's normal hours of operation, and special arrangements should be made for deliveries of boxed information.

Instructions: Direct your comments to Docket ID No. EPA–HQ–SFUND–2011–0177. EPA's policy is that all comments received will be included in the public docket without change and may be made available online at *http://www.regulations.gov,* including any personal information provided, unless the comment includes information claimed to be Confidential Business Information (CBI) or other information whose disclosure is restricted by statute. Do not submit information that you consider to be CBI or otherwise protected through *www.regulations.gov* or e-mail. The *http://www.regulations.gov* Web site is an "anonymous access" system, which means EPA will not know your identity or contact information unless you provide it in the body of your comment. If you send an e-mail comment directly to EPA without going through *http://www.regulations.gov* your e-mail address will be automatically captured and included as part of the comment that is placed in the public docket and made available on the Internet. If you submit an electronic comment, EPA recommends that you include your name and other contact information in the body of your comment and with any disk or CD–ROM you submit. If EPA cannot read your comment due to technical difficulties and cannot contact you for clarification, EPA may not be able to consider your comment. Electronic files should avoid the use of special characters, any form of encryption, and be free of any defects or viruses. For additional information about EPA's public docket visit *http://www.regulations.gov.*

FOR FURTHER INFORMATION CONTACT: Laura Knudsen, Assessment and Remediation Division, Office of Superfund Remediation and Technology Innovation, (Mail Code 5204P), Environmental Protection Agency, 1200 Pennsylvania Ave., NW., Washington, DC 20460; telephone number: 703–603–8861; fax number: 703–603–9102; e-mail address: *knudsen.laura@epa.gov.*

SUPPLEMENTARY INFORMATION:

How can I access the docket and/or submit comments?

EPA has established a public docket for this ICR under Docket ID No. EPA–HQ–SFUND–2011–0177 which is available for online viewing at *http://www.regulations.gov,* or in person viewing at the Superfund Docket in the EPA Docket Center (EPA/DC), EPA West, Room 3334, 1301 Constitution Ave., NW., Washington, DC. The EPA/DC Public Reading Room is open from 8:30 a.m. to 4:30 p.m., Monday through Friday, excluding legal holidays. The telephone number for the Reading Room is 202–566–1744, and the telephone number for the Superfund Docket is 202–566–0276.

Use *http://www.regulations.gov* to obtain a copy of the draft collection of information, submit or view public comments, access the index listing of the contents of the docket, and to access those documents in the public docket that are available electronically. Once in the system, select "search," then key in the docket ID number identified in this document.

What information is EPA particularly interested in?

Pursuant to section 3506(c)(2)(A) of the PRA, EPA specifically solicits comments and information to enable it to:

(i) Evaluate whether the proposed collection of information is necessary for the proper performance of the functions of the Agency, including whether the information will have practical utility;

(ii) Evaluate the accuracy of the Agency's estimate of the burden of the proposed collection of information, including the validity of the methodology and assumptions used;

(iii) Enhance the quality, utility, and clarity of the information to be collected; and

(iv) Minimize the burden of the collection of information on those who are to respond, including through the use of appropriate automated electronic, mechanical, or other technological collection techniques or other forms of information technology, *e.g.,* permitting electronic submission of responses. In particular, EPA is requesting comments from very small businesses (those that employ less than 25) on examples of specific additional efforts that EPA could make to reduce the paperwork burden for very small businesses affected by this collection.

What should I consider when I prepare my comments for EPA?

You may find the following suggestions helpful for preparing your comments:

1. Explain your views as clearly as possible and provide specific examples.
2. Describe any assumptions that you used.
3. Provide copies of any technical information and/or data you used that support your views.
4. If you estimate potential burden or costs, explain how you arrived at the estimate that you provide.
5. Offer alternative ways to improve the collection activity.
6. Make sure to submit your comments by the deadline identified under **DATES**.
7. To ensure proper receipt by EPA, be sure to identify the docket ID number assigned to this action in the subject line on the first page of your response. You may also provide the name, date, and **Federal Register** citation.

What information collection activity or ICR does this apply to?

Affected entities: Entities potentially affected by this action are State/Tribal governments and individual community members who voluntarily participate in the remedial phase of the Superfund program and in associated community involvement activities throughout the Superfund process.

Title: National Oil and Hazardous Substance Pollution Contingency Plan (NCP) (Renewal).

ICR numbers: EPA ICR No. 1463.08, OMB Control No. 2050–0096.

ICR status: This ICR is currently scheduled to expire on July 31, 2011. An Agency may not conduct or sponsor, and a person is not required to respond to, a collection of information, unless it displays a currently valid OMB control

number. The OMB control numbers for EPA's regulations in title 40 of the CFR, after appearing in the **Federal Register** when approved, are listed in 40 CFR part 9, are displayed either by publication in the **Federal Register** or by other appropriate means, such as on the related collection instrument or form, if applicable. The display of OMB control numbers in certain EPA regulations is consolidated in 40 CFR part 9.

Abstract: This Information Collection Request is a renewal ICR that covers the remedial portion of the Superfund Program, as specified in the Comprehensive Environmental Response, Compensation, and Liability Act of 1980 as amended (CERCLA) and the National Oil and Hazardous Substance Pollution Contingency Plan (NCP). All remedial actions covered by this ICR (*e.g.,* Remedial Investigations/Feasibility Studies) are stipulated in the statute (CERCLA) and are instrumental in the process of cleaning up National Priorities List (NPL) sites to be protective of human health and the environment. Some community involvement activities covered by this ICR are not required at every site (*e.g.,* Technical Assistance Grants) and depend very much on the community and the nature of the site and cleanup. All community activities seek to involve the public in the cleanup of the sites, gain the input of community members, and include the community's perspective on the potential future reuse of Superfund NPL sites. Community involvement activities can enhance the remedial process and increase community acceptance and the potential for productive and useful reuse of the sites.

Burden Statement: The annual public reporting and recordkeeping burden for this collection of information is estimated to average 80 hours per response. Burden means the total time, effort, or financial resources expended by persons to generate, maintain, retain, or disclose or provide information to or for a Federal agency. This includes the time needed to review instructions; develop, acquire, install, and utilize technology and systems for the purposes of collecting, validating, and verifying information, processing and maintaining information, and disclosing and providing information; adjust the existing ways to comply with any previously applicable instructions and requirements which have subsequently changed; train personnel to be able to respond to a collection of information; search data sources; complete and review the collection of information; and transmit or otherwise disclose the information.

The ICR provides a detailed explanation of the Agency's estimate, which is only briefly summarized here:

Estimated total number of potential respondents: 7,970.

Frequency of response: On occasion.

Estimated total average number of responses for each respondent: As required.

Estimated total annual burden hours: 71,165 hours.

Estimated total annual costs: $572,415. This includes an estimated burden cost of $61,245 for States and an estimated cost of $511,170 for communities.

What is the next step in the process for this ICR?

EPA will consider the comments received and amend the ICR as appropriate. The final ICR package will then be submitted to OMB for review and approval pursuant to 5 CFR 1320.12. At that time, EPA will issue another **Federal Register** notice pursuant to 5 CFR 1320.5(a)(1)(iv) to announce the submission of the ICR to OMB and the opportunity to submit additional comments to OMB. If you have any questions about this ICR or the approval process, please contact the technical person listed under **FOR FURTHER INFORMATION CONTACT**.

Dated: April 27, 2011.

James E. Woolford,

Office Director, Office of Superfund Remediation and Technology Innovation.

[FR Doc. 2011–10891 Filed 5–3–11; 8:45 am]

BILLING CODE 6560–50–P

ENVIRONMENTAL PROTECTION AGENCY

[FRL–9301–5]

Cross-Media Electronic Reporting: Authorized Program Revision/Modification Approvals, State of South Dakota

AGENCY: Environmental Protection Agency (EPA).

ACTION: Notice.

SUMMARY: This notice announces EPA's approval of the State of South Dakota's request to revise/modify certain of its EPA-authorized programs to allow electronic reporting.

DATES: EPA's approval is effective May 4, 2011.

FOR FURTHER INFORMATION CONTACT: Evi Huffer, U.S. Environmental Protection Agency, Office of Environmental Information, Mail Stop 2823T, 1200 Pennsylvania Avenue, NW., Washington, DC 20460, (202) 566–1697, *huffer.evi@epa.gov,* U.S. Environmental Protection Agency, Office of Environmental Information, Mail Stop 2823T, 1200 Pennsylvania Avenue, NW., Washington, DC 20460, or Karen Seeh, U.S. Environmental Protection Agency, Office of Environmental Information, Mail Stop 2823T, 1200 Pennsylvania Avenue, NW., Washington, DC 20460, (202) 566–1175, *seeh.karen@epa.gov.*

SUPPLEMENTARY INFORMATION: On October 13, 2005, the final Cross-Media Electronic Reporting Rule (CROMERR) was published in the **Federal Register** (70 FR 59848) and codified as part 3 of title 40 of the CFR. CROMERR establishes electronic reporting as an acceptable regulatory alternative to paper reporting and establishes requirements to assure that electronic documents are as legally dependable as their paper counterparts. Under subpart D of CROMERR, state, Tribe or local government agencies that receive, or wish to begin receiving, electronic reports under their EPA-authorized programs must apply to EPA for a revision or modification of those programs and obtain EPA approval. Subpart D also provides standards for such approvals based on consideration of the electronic document receiving systems that the state, Tribe, or local government will use to implement the electronic reporting. Additionally, in § 3.1000(b) through (e) of 40 CFR part 3, subpart D provides special procedures for program revisions and modifications to allow electronic reporting, to be used at the option of the state, Tribe or local government in place of procedures available under existing program-specific authorization regulations. An application submitted under the subpart D procedures must show that the state, Tribe or local government has sufficient legal authority to implement the electronic reporting components of the programs covered by the application and will use electronic document receiving systems that meet the applicable subpart D requirements.

On December 9, 2010, South Dakota Department of Environment and Natural Resources (DENR) submitted an application for its Net Discharge Monitoring Report (NetDMR) electronic document receiving system for revision/modification of its EPA-authorized programs under title 40 CFR. EPA reviewed SD DENR's request to revise its EPA-authorized programs and, based on this review, EPA determined that the application met the standards for approval of authorized program

revisions/modifications set out in 40 CFR part 3, subpart D. In accordance with 40 CFR 3.1000(d), this notice of EPA's decision to approve South Dakota's request for revision to its 40 CFR part 123—National Pollutant Discharge Elimination System (NPDES) State Program Requirements and part 403—General Pretreatment Regulations For Existing And New Sources Of Pollution EPA-authorized programs for electronic reporting of discharge monitoring report information submitted under 40 CFR parts 122 and 403 is being published in the **Federal Register**.

SD DENR was notified of EPA's determination to approve its application with respect to the authorized programs listed above.

Dated: April 27, 2011.

Arnold E. Layne,

Acting Director, Office of Information Collection.

[FR Doc. 2011–10893 Filed 5–3–11; 8:45 am]

BILLING CODE 6560–50–P

ENVIRONMENTAL PROTECTION AGENCY

[FRL–9301–4]

Cross-Media Electronic Reporting: Authorized Program Revision Approval, State of Maryland

AGENCY: Environmental Protection Agency (EPA).

ACTION: Notice.

SUMMARY: This notice announces EPA's approval of the State of Maryland's request to revise its EPA-authorized program to allow electronic reporting.

DATES: EPA's approval is effective May 4, 2011.

FOR FURTHER INFORMATION CONTACT: Evi Huffer, U.S. Environmental Protection Agency, Office of Environmental Information, Mail Stop 2823T, 1200 Pennsylvania Avenue, NW., Washington, DC 20460, (202) 566–1697, *huffer.evi@epa.gov,* U.S. Environmental Protection Agency, Office of Environmental Information, Mail Stop 2823T, 1200 Pennsylvania Avenue, NW., Washington, DC 20460, or Karen Seeh, U.S. Environmental Protection Agency, Office of Environmental Information, Mail Stop 2823T, 1200 Pennsylvania Avenue, NW., Washington, DC 20460, (202) 566–1175, *seeh.karen@epa.gov.*

SUPPLEMENTARY INFORMATION: On October 13, 2005, the final Cross-Media Electronic Reporting Rule (CROMERR) was published in the **Federal Register** (70 FR 59848) and codified as part 3 of title 40 of the CFR. CROMERR establishes electronic reporting as an acceptable regulatory alternative to paper reporting and establishes requirements to assure that electronic documents are as legally dependable as their paper counterparts. Under subpart D of CROMERR, state, Tribe or local government agencies that receive, or wish to begin receiving, electronic reports under their EPA-authorized programs must apply to EPA for a revision or modification of those programs and obtain EPA approval. Subpart D also provides standards for such approvals based on consideration of the electronic document receiving systems that the state, tribe, or local government will use to implement the electronic reporting. Additionally, in § 3.1000(b) through (e) of 40 CFR part 3, subpart D provides special procedures for program revisions and modifications to allow electronic reporting, to be used at the option of the state, Tribe or local government in place of procedures available under existing program-specific authorization regulations. An application submitted under the subpart D procedures must show that the state, Tribe or local government has sufficient legal authority to implement the electronic reporting components of the programs covered by the application and will use electronic document receiving systems that meet the applicable subpart D requirements.

On December 9, 2010, the Maryland Department of the Environment (MDE) submitted an application for its Net Discharge Monitoring Report (NetDMR) electronic document receiving system for revision of its EPA-authorized program under title 40 CFR. EPA reviewed MDE's request to revise its EPA-authorized program and, based on this review, EPA determined that the application met the standards for approval of authorized program revisions set out in 40 CFR part 3, subpart D. In accordance with 40 CFR 3.1000(d), this notice of EPA's decision to approve Maryland's request for revision to its 40 CFR part 123–National Pollutant Discharge Elimination System (NPDES) State Program Requirements EPA-authorized program for electronic reporting of discharge monitoring report information submitted under 40 CFR part 122 is being published in the **Federal Register**.

MDE was notified of EPA's determination to approve its application with respect to the authorized program listed above.

Dated: April 28, 2011.

Arnold E. Layne,

Acting Director, Office of Information Collection.

[FR Doc. 2011–10892 Filed 5–3–11; 8:45 am]

BILLING CODE 6560–50–P

ENVIRONMENTAL PROTECTION AGENCY

[EPA–HQ–OPP–2009–1017; FRL–8870–5]

Notice of Receipt of Requests To Voluntarily Cancel Certain Pesticide Registrations

AGENCY: Environmental Protection Agency (EPA).

ACTION: Notice.

SUMMARY: In accordance with section 6(f)(1) of the Federal Insecticide, Fungicide, and Rodenticide Act (FIFRA), as amended, EPA is issuing a notice of receipt of requests by registrants to voluntarily cancel certain pesticide registrations. EPA intends to grant these requests at the close of the comment period for this announcement unless the Agency receives substantive comments within the comment period that would merit its further review of the requests, or unless the registrants withdraw their requests. If these requests are granted, any sale, distribution, or use of products listed in this notice will be permitted after the registrations have been cancelled only if such sale, distribution, or use is consistent with the terms as described in the final order.

DATES: Comments must be received on or before June 3, 2011.

ADDRESSES: Submit your comments, identified by docket identification (ID) number EPA–HQ–OPP–2009–1017, by one of the following methods:

- *Federal eRulemaking Portal: http://www.regulations.gov.* Follow the on-line instructions for submitting comments.
- *Mail:* Office of Pesticide Programs (OPP) Regulatory Public Docket (7502P), Environmental Protection Agency, 1200 Pennsylvania Ave., NW., Washington, DC 20460–0001.

Submit written withdrawal request by mail to: Pesticide Re-evaluation Division (7508P), Office of Pesticide Programs, Environmental Protection Agency, 1200 Pennsylvania Ave., NW., Washington, DC 20460–0001. *Attn:* Maia Tatinclaux.

- *Delivery:* OPP Regulatory Public Docket (7502P), Environmental Protection Agency, Rm. S–4400, One Potomac Yard (South Bldg.), 2777 S. Crystal Dr., Arlington, VA. Deliveries are only accepted during the Docket

Facility's normal hours of operation (8:30 a.m. to 4 p.m., Monday through Friday, excluding legal holidays). Special arrangements should be made for deliveries of boxed information. The Docket Facility telephone number is (703) 305–5805.

Instructions: Direct your comments to docket ID number EPA–HQ–OPP–2009–1017. EPA's policy is that all comments received will be included in the docket without change and may be made available on-line at *http://www.regulations.gov,* including any personal information provided, unless the comment includes information claimed to be Confidential Business Information (CBI) or other information whose disclosure is restricted by statute. Do not submit information that you consider to be CBI or otherwise protected through regulations.gov or e-mail. The regulations.gov Web site is an "anonymous access" system, which means EPA will not know your identity or contact information unless you provide it in the body of your comment. If you send an e-mail comment directly to EPA without going through regulations.gov, your e-mail address will be automatically captured and included as part of the comment that is placed in the docket and made available on the Internet. If you submit an electronic comment, EPA recommends that you include your name and other contact information in the body of your comment and with any disk or CD–ROM you submit. If EPA cannot read your comment due to technical difficulties and cannot contact you for clarification, EPA may not be able to consider your comment. Electronic files should avoid the use of special characters, any form of encryption, and be free of any defects or viruses.

Docket: All documents in the docket are listed in the docket index available at *http://www.regulations.gov.* Although listed in the index, some information is not publicly available, *e.g.,* CBI or other information whose disclosure is restricted by statute. Certain other material, such as copyrighted material, is not placed on the Internet and will be publicly available only in hard copy form. Publicly available docket materials are available either in the electronic docket at *http://www.regulations.gov,* or, if only available in hard copy, at the OPP Regulatory Public Docket in Rm. S–4400, One Potomac Yard (South Bldg.), 2777 S. Crystal Dr., Arlington, VA. The hours of operation of this Docket Facility are from 8:30 a.m. to 4 p.m., Monday through Friday, excluding legal holidays. The Docket Facility telephone number is (703) 305–5805.

FOR FURTHER INFORMATION CONTACT: Maia Tatinclaux, Pesticide Re-evaluation Division (7508P), Office of Pesticide Programs, Environmental Protection Agency, 1200 Pennsylvania Ave., NW., Washington, DC 20460–0001; *telephone number:* (703) 347–0123; *e-mail address: tatinclaux.maia@epa.gov.*

SUPPLEMENTARY INFORMATION:

I. General Information

A. Does this action apply to me?

This action is directed to the public in general, and may be of interest to a wide range of stakeholders including environmental, human health, and agricultural advocates; the chemical industry; pesticide users; and members of the public interested in the sale, distribution, or use of pesticides. If you have any questions regarding the information in this notice, consult the person listed under **FOR FURTHER INFORMATION CONTACT**.

B. What should I consider as I prepare my comments for EPA?

1. *Submitting CBI.* Do not submit this information to EPA through regulations.gov or e-mail. Clearly mark the part or all of the information that you claim to be CBI. For CBI information in a disk or CD–ROM that you mail to EPA, mark the outside of the disk or CD–ROM as CBI and then identify electronically within the disk or CD–ROM the specific information that is claimed as CBI. In addition to one complete version of the comment that includes information claimed as CBI, a copy of the comment that does not contain the information claimed as CBI must be submitted for inclusion in the public docket. Information so marked will not be disclosed except in accordance with procedures set forth in 40 CFR part 2.

2. *Tips for preparing your comments.* When submitting comments, remember to:

i. Identify the document by docket ID number and other identifying information (subject heading, **Federal Register** date and page number).

ii. Follow directions. The Agency may ask you to respond to specific questions or organize comments by referencing a Code of Federal Regulations (CFR) part or section number.

iii. Explain why you agree or disagree; suggest alternatives and substitute language for your requested changes.

iv. Describe any assumptions and provide any technical information and/or data that you used.

v. If you estimate potential costs or burdens, explain how you arrived at your estimate in sufficient detail to allow for it to be reproduced.

vi. Provide specific examples to illustrate your concerns and suggest alternatives.

vii. Explain your views as clearly as possible, avoiding the use of profanity or personal threats.

viii. Make sure to submit your comments by the comment period deadline identified.

II. What action is the agency taking?

This notice announces receipt by the Agency of requests from registrants to cancel 124 pesticide products registered under FIFRA section 3 or 24(c). These registrations are listed in sequence by registration number (or company number and 24(c) number) in Tables 1, 2, and 3 of this unit.

Table 3 contains a list of registrations for which companies paying at one of the maintenance fee caps requested cancellation in the FY 2011 maintenance fee billing cycle. Because maintaining these registrations as active would require no additional fee, the Agency is treating these requests as voluntary cancellations under section 6(f)(1).

Unless the Agency determines that there are substantive comments that warrant further review of the requests or the registrants withdraw their requests, EPA intends to issue an order in the **Federal Register** canceling all of the affected registrations.

TABLE 1—REGISTRATIONS WITH PENDING REQUESTS FOR CANCELLATION

Registration No.	Product name	Chemical name
000056–00056	J.T. Eaton Answer for Mice Feeder Box	Chlorophacinone.
000056–00069	J.T. Eaton Answer for Mice Feeder Box	Chlorophacinone.
001020–00008	Oakite Steri-Det	Alkyl* dimethyl benzyl ammonium chloride *(60% C14, 30% C16, 5% C18, 5% C12).

TABLE 1—REGISTRATIONS WITH PENDING REQUESTS FOR CANCELLATION—Continued

Registration No.	Product name	Chemical name
		Alkyl* dimethyl ethyl ammonium chloride *(50% C12, 30% C14, 17% C16, 3% C18).
001022–00523	Cunapsol-2	Copper naphthenate.
001448–00054	Nabe-M	Carbamodithioic acid, methyl-monopotassium salt.
		Carbamodithioic acid, cyano-disodium salt.
005481–00551	Ambush 4E Insecticide	Permethrin.
006836–00057	Barquat 42Z-10	Alkyl* dimethyl benzyl ammonium chloride *(60% C14, 30% C16, 5% C18, 5% C12).
		Alkyl* dimethyl ethylbenzyl ammonium chloride *(68% C12, 32% C14).
006836–00270	Barquat 42Z-10F	Alkyl* dimethyl benzyl ammonium chloride *(60% C14, 30% C16, 5% C18, 5% C12).
		Alkyl* dimethyl ethylbenzyl ammonium chloride *(68% C12, 32% C14).
007792–00005	Roebic Root Endz	Copper sulfate pentahydrate.
009688–00070	Chemsico Roach Control System I	Tralomethrin.
009688–00078	Chemsico Tralomethrin Indoor Fogger	Tralomethrin.
009688–00080	Chemsico Home Insect Control A	Tralomethrin.
009688–00081	Chemsico Home Insect Control B	Tralomethrin.
009688–00082	Chemsico Tralomethrin Flea Killer	Tralomethrin.
009688–00087	Chemsico Home Insect Control D	Tralomethrin.
009688–00091	Chemsico Home Insect Control Refill	Tralomethrin.
009688–00098	Chemsico Home Insect Control E	Tralomethrin.
009688–00101	Chemsico Home Insect Control E Refill	Tralomethrin.
009688–00113	Chemsico Tralomethrin Insecticide D	Tralomethrin.
009688–00119	Green Thumb Home Insect Fogger	Tralomethrin.
009688–00144	Dethmor 3.75% EC	Tralomethrin.
009688–00147	Chemsico Indoor Fogger G	Tralomethrin.
009688–00152	Saga WP Insecticide 228	Tralomethrin.
009688–00153	Saga Multi-purpose Home Pest Control Insecticide	Tralomethrin.
009688–00166	Chemsico Insect Control CP	Tralomethrin.
009688–00167	Aerosol Insecticide IT–B	Imiprothrin Tralomethrin.
009688–00170	Chemsico Aerosol Insecticide IT–D	Imiprothrin Tralomethrin.
009688–00171	Chemsico Aerosol Insecticide IT–C	Imiprothrin Tralomethrin.
009688–00172	Chemsico Insect Granules Formula T	Tralomethrin.
009688–00185	Chemsico Tralomethrin Insecticide C	Prallethrin Tralomethrin.
009688–00194	Chemsico Wasp & Hornet Killer TE	Prallethrin Tralomethrin.
009688–00204	Chemsico Insecticide Concentrate T	Tralomethrin.
009688–00275	Chemsico Insecticide RTU OP–M	Pyrethrins.
047000–00139	Permethrin Dust 0.25%	Permethrin.
047371–00137	Formulation RTU–6075	Alkyl* dimethyl benzyl ammonium chloride *(60% C14, 30% C16, 5% C18, 5% C12).
		Alkyl* dimethyl ethylbenzyl ammonium chloride *(50% C12, 30% C14, 17% C16, 3% C18)
048273–00023	Marman Malathion	Malathion.
048273–00026	Marman Malathion 56 EC	Malathion.
062719–00308	Vista	Fluroxypyr 1-methylheptyl ester.

TABLE 2—REQUESTED CANCELLATIONS OF REGISTRATIONS CONTAINING METHYL BROMIDE

003377–00009	Methyl Bromide Technical	Methyl bromide.
005785–00023	Terr-O-Gas 45	Chloropicrin Methyl bromide.
008622–00040	57–43 Preplant Soil Fumigant	Methyl bromide Chloropicrin.
008622–00044	80–20 Preplant Soil Fumigant	Methyl bromide Chloropicrin.

TABLE 3—REGISTRATIONS WITH PENDING REQUESTS FOR CANCELLATION DUE TO NON-PAYMENT OF MAINTENANCE FEES

Registration No.	Product name	Chemical name
000400–00069	B–Nine	Daminozide.
000400–00500	Floramite Ls	Bifenazate.
000400–00501	Floramite GN	Bifenazate.
006836–00022	Lonza Disinfectant Cleaner (30–3)	1-Decanaminium, N-decyl-N,N-dimethyl-, chloride.
006836–00027	Lonza Disinfectant Cleaner (47–5)	1-Decanaminium, N-decyl-N,N-dimethyl-, chloride.
006836–00034	Lonza Formulation 71–30	1-Decanaminium, N-decyl-N,N-dimethyl-, chloride.
		1-Octanaminium, N,N-dimethyl-N-octyl-, chloride.
		1-Decanaminium, N,N-dimethyl-N-octyl-, chloride.
006836–00037	Lonza Formulation 68–16	1-Decanaminium, N-decyl-N,N-dimethyl-, chloride.
		1-Octanaminium, N,N-dimethyl-N-octyl-, chloride.
		1-Decanaminium, N,N-dimethyl-N-octyl-, chloride.

TABLE 3—REGISTRATIONS WITH PENDING REQUESTS FOR CANCELLATION DUE TO NON-PAYMENT OF MAINTENANCE FEES—Continued

Registration No.	Product name	Chemical name
006836–00072	Lonza Formulation S–37	1-Decanaminium, N-decyl-N,N-dimethyl-, chloride. 1-Octanaminium, N,N-dimethyl-N-octyl-, chloride. 1-Decanaminium, N,N-dimethyl-N-octyl-, chloride. Alkyl* dimethyl benzyl ammonium chloride *(50%C14, 40%C12, 10%C16).
006836–00099	Formulation 100a	Alkyl* dimethyl benzyl ammonium chloride *(50%C14, 40%C12, 10%C16).
006836–00100	Formulation DC 100b	Alkyl* dimethyl benzyl ammonium chloride *(50%C14, 40%C12, 10%C16).
006836–00101	Formulation DC 100C	Alkyl* dimethyl benzyl ammonium chloride *(50%C14, 40%C12, 10%C16).
006836–00102	Formulation 100 D	Alkyl* dimethyl benzyl ammonium chloride *(50%C14, 40%C12, 10%C16).
006836–00105	Rohm and Haas DC–100 G	Alkyl* dimethyl benzyl ammonium chloride *(50%C14, 40%C12, 10%C16).
006836–00137	Lonza Formulation S–37f	1–Decanaminium, N-decyl-N,N-dimethyl-, chloride. 1–Octanaminium, N,N-dimethyl-N-octyl-, chloride. 1–Decanaminium, N,N-dimethyl-N-octyl-, chloride. Alkyl* dimethyl benzyl ammonium chloride *(50%C14, 40%C12, 10%C16).
006836–00141	Lonza Formulation 70–12f	1-Decanaminium, N-decyl-N,N-dimethyl-, chloride. 1-Octanaminium, N,N-dimethyl-N-octyl-, chloride. 1-Decanaminium, N,N-dimethyl-N-octyl-, chloride. Alkyl* dimethyl benzyl ammonium chloride *(50%C14, 40%C12, 10%C16).
006836–00158	Bio Guard Swimming Pool Algicide 28–10	Alkyl* dimethyl benzyl ammonium chloride *(58%C14, 28%C16, 14%C12).
006836–00178	Bio-Guard M–38 Disinfectant, Cleaner, Deodorant	Alkyl* dimethyl benzyl ammonium chloride *(58%C14, 28%C16, 14%C12).
006836–00179	Bio-Guard L–38	Alkyl* dimethyl benzyl ammonium chloride *(58%C14, 28%C16, 14%C12).
006836–00181	Lonza Formulation LS–22	Alkyl* dimethyl benzyl ammonium chloride *(58%C14, 28%C16, 14%C12).
006836–00185	Bio-Guard L–76	Alkyl* dimethyl benzyl ammonium chloride *(58%C14, 28%C16, 14%C12).
006836–00215	Barquat Molluscicide 80	Alkyl* dimethyl benzyl ammonium chloride *(50%C14, 40%C12, 10%C16).
006836–00222	Bath Master	1-Decanaminium, N-decyl-N,N-dimethyl-, chloride. 1-Octanaminium, N,N-dimethyl-N-octyl-, chloride. 1-Decanaminium, N,N-dimethyl-N-octyl-, chloride. Alkyl* dimethyl benzyl ammonium chloride *(50%C14, 40%C12, 10%C16).
006836–00223	Bath Master (refill)	1-Decanaminium, N-decyl-N,N-dimethyl-, chloride. 1-Octanaminium, N,N-dimethyl-N-octyl-, chloride. 1-Decanaminium, N,N-dimethyl-N-octyl-, chloride. Alkyl* dimethyl benzyl ammonium chloride *(50%C14, 40%C12, 10%C16).
006836–00224	Smart AB	1-Decanaminium, N-decyl-N,N-dimethyl-, chloride. 1-Octanaminium, N,N-dimethyl-N-octyl-, chloride. 1-Decanaminium, N,N-dimethyl-N-octyl-, chloride. Alkyl* dimethyl benzyl ammonium chloride *(50%C14, 40%C12, 10%C16).
006836–00225	Smart AB Refill	1-Decanaminium, N-decyl-N,N-dimethyl-, chloride. 1-Octanaminium, N,N-dimethyl-N-octyl-, chloride. 1-Decanaminium, N,N-dimethyl-N-octyl-, chloride. Alkyl* dimethyl benzyl ammonium chloride *(50%C14, 40%C12, 10%C16).
006836–00232	Bardac 22–50	1-Decanaminium, N-decyl-N,N-dimethyl-, chloride.
006836–00246	Lonza Barquat 1552–5%	Dialkyl* methyl benzyl ammonium chloride *(60%C14, 30%C16, 5%C18, 5%C12). Alkyl* dimethyl benzyl ammonium chloride *(60%C14, 30%C16, 5%C18, 5%C12).
006836–00260	Barquat WP 50	Alkyl* dimethyl benzyl ammonium chloride *(67%C12, 25%C14, 7%C16, 1%C18).
043813–00033	Bethoguard Technical	Bethoxazin.
043813–00034	Bethoguard Biocide	Bethoxazin.
043813–00035	Bethoguard 300 SC	Bethoxazin.
047371–00002	Formulation HS–64Q	Alkyl* dimethyl benzyl ammonium chloride *(60%C14, 30%C16, 5%C18, 5%C12). Alkyl* dimethyl ethylbenzyl ammonium chloride *(50%C12, 30%C14, 17%C16, 3%C18).

TABLE 3—REGISTRATIONS WITH PENDING REQUESTS FOR CANCELLATION DUE TO NON-PAYMENT OF MAINTENANCE FEES—Continued

Registration No.	Product name	Chemical name
047371–00007	Formulation HS–821Q	1-Decanaminium, N-decyl-N,N-dimethyl-, chloride. Alkyl* dimethyl benzyl ammonium chloride *(50%C14, 40%C12, 10%C16).
047371–00008	Formulation HS–256Q	Alkyl* dimethyl benzyl ammonium chloride *(60%C14, 30%C16, 5%C18, 5%C12). Alkyl* dimethyl ethylbenzyl ammonium chloride *(68%C12, 32%C14).
047371–00009	Quanto A Germicidal Detergent	Alkyl* dimethyl benzyl ammonium chloride *(60%C14, 30%C16, 5%C18, 5%C12). Alkyl* dimethyl ethylbenzyl ammonium chloride *(68%C12, 32%C14).
047371–00029	Formulation Hl-69d	Alkyl* dimethyl benzyl ammonium chloride *(60%C14, 30%C16, 5%C18, 5%C12). Tributyltin oxide.
047371–00038	HS–Q Germicidal Concentrate	Alkyl* dimethyl benzyl ammonium chloride *(50%C14, 40%C12, 10%C16).
047371–00041	Formulation HS–56P	Alkyl* dimethyl ethylbenzyl ammonium chloride *(68%C12, 32%C14). Alkyl* dimethyl benzyl ammonium chloride *(60%C14, 30%C16, 5%C18, 5%C12).
047371–00048	Formulation AE–3328	Alkyl* dimethyl ethylbenzyl ammonium chloride *(68%C12, 32%C14). Alkyl* dimethyl benzyl ammonium chloride *(60%C14, 30%C16, 5%C18, 5%C12).
047371–00054	Formulation HS 210–37	1-Decanaminium, N-decyl-N,N-dimethyl-, chloride.
047371–00056	HS–1210 Swimming Pool Algaecide	1-Decanaminium, N-decyl-N,N-dimethyl-, chloride. Alkyl* dimethyl benzyl ammonium chloride *(50%C14, 40%C12, 10%C16).
047371–00074	Pow-256 Powdered Germicidal Detergent	Alkyl* dimethyl ethylbenzyl ammonium chloride *(68%C12, 32%C14). Alkyl* dimethyl benzyl ammonium chloride *(60%C14, 30%C16, 5%C18, 5%C12).
047371–00077	Formulation HTA–64 Disinfectant	Alkyl* dimethyl ethylbenzyl ammonium chloride *(68%C12, 32%C14). Alkyl* dimethyl benzyl ammonium chloride *(60%C14, 30%C16, 5%C18, 5%C12).
047371–00098	HS–451 Swimming Pool Algaecide	Alkyl* dimethyl benzyl ammonium chloride *(50%C14, 40%C12, 10%C16).
047371–00141	Formulation HH–652 Q	Alkyl* dimethyl benzyl ammonium chloride *(50%C14, 40%C12, 10%C16). 1-Decanaminium, N-decyl-N,N-dimethyl-, chloride.
047371–00142	Formulation HTA–96	Alkyl* dimethyl ethylbenzyl ammonium chloride *(68%C12, 32%C14). Alkyl* dimethyl benzyl ammonium chloride *(60%C14, 30%C16, 5%C18, 5%C12).
047371–00143	HS–96 Disinfectant Bowl Cleaner	Alkyl* dimethyl ethylbenzyl ammonium chloride *(50%C12, 30%C14, 17%C16, 3%C18). Alkyl* dimethyl benzyl ammonium chloride *(60%C14, 30%C16, 5%C18, 5%C12).
047371–00145	HS–210 Laundry Mildew & Bacteriostat (10%)	1-Decanaminium, N-decyl-N,N-dimethyl-, chloride.
047371–00150	TB–910 Disinfectant Bowl Cleaner & Deodorant	Hydrochloric acid. 1-Decanaminium, N-decyl-N,N-dimethyl-, chloride.
047371–00155	Formulation RTU–6075a	Alkyl* dimethyl ethylbenzyl ammonium chloride *(50%C12, 30%C14, 17%C16, 3%C18). Alkyl* dimethyl benzyl ammonium chloride *(60%C14, 30%C16, 5%C18, 5%C12).
047371–00157	Formulation RTU-6075 (la).	Alkyl* dimethyl ethylbenzyl ammonium chloride *(50%C12, 30%C14, 17%C16, 3%C18). Alkyl* dimethyl benzyl ammonium chloride *(60%C14, 30%C16, 5%C18, 5%C12).
047371–00165	HS–451 Waterbed Microbiocide	Alkyl* dimethyl benzyl ammonium chloride *(50%C14, 40%C12, 10%C16).
047371–00172	TB–A165 Disinfectant Bowl Cleaner	Hydrochloric acid. 1-Decanaminium, N-decyl-N,N-dimethyl-, chloride.
047371–00184	HS–210 Sap Stain Control	1-Decanaminium, N-decyl-N,N-dimethyl-, chloride.
073049–00360	Tralex FA 3.75% EC	Tralomethrin.
073049–00401	Tralex MUP	Tralomethrin.
073049–00459	Ultra TEC DS Yard and Patio Spray	S-Bioallethrin Deltamethrin.
CA780167	Comite Agricultural Miticide	Propargite.
CA940008	Omite-30WS Agricultural Miticide	Propargite.
DE040003	Acramite 50ws	Bifenazate.

TABLE 3—REGISTRATIONS WITH PENDING REQUESTS FOR CANCELLATION DUE TO NON-PAYMENT OF MAINTENANCE FEES—Continued

Registration No.	Product name	Chemical name
ID070010	Acramite-4sc	Bifenazate.
ID070013	Acramite-4SC	Bifenazate.
ID910015	Comite Agricultural Miticide	Propargite.
ID940011	Comite Agricultural Miticide	Propargite.
ID970015	Comite Agricultural Miticide	Propargite.
KS950001	Comite II	Propargite.
MT900001	Comite Agricultural Miticide	Propargite.
ND050005	Dimilin 2l	Diflubenzuron.
NV870009	Comite Agricultural Miticide	Propargite.
OR080010	Comite Agricultural Miticide	Propargite.
OR080015	Comite	Propargite.
OR080029	Acramite-4SC	Bifenazate.
OR080030	Acramite-4SC	Bifenazate.
SC910003	Comite Agricultural Miticide	Propargite.
TN080006	Temprano	Abamectin.
TX940006	Comite II	Propargite.
UT960006	Comite Agricultural Miticide	Propargite.
WA040020	Comite—Potato SLN	Propargite.
WA070009	Acramite-4SC	Bifenazate.
WA070011	Acramite-4SC	Bifenazate.
WA870029	Comite Agricultural Miticide	Propargite.
WA910033	Comite Agricultural Miticide	Propargite.

Table 4 of this unit includes the names and addresses of record for all registrants of the products in Tables 1, 2, and 3 of this unit, in sequence by EPA company number. This number corresponds to the first part of the EPA registration numbers of the products listed in this unit.

TABLE 4—REGISTRANTS REQUESTING VOLUNTARY CANCELLATION

EPA Company No.	Company name and address
56	Eaton JT & Company, Inc., 1393 E. Highland Rd., Twinsburg, OH 44087.
400	Chemtura Corp. Attn: Crop Registration, 199 Benson Rd., Middlebury, CT 06749.
1020	Chemetall US, Inc., 675 Central Avenue, New Providence, NJ 07974–0007.
1022	IBC Manufacturing Co., 416 E. Brooks Rd., Memphis, TN 38109.
1448	Buckman Laboratories Inc., 1256 North Mclean Blvd., Memphis, TN 38108.
3377	Albermarle Corporation, 451 Florida Street, Baton Rouge, LA 70801–1765.
5481	Amvac Chemical Corporation, 4695 MacArthur Court, Suite 1250, Newport Beach, CA 92660.
5785	Great Lakes Chemical Corporation Agent: Chemtura Corporation, 1801 Highway 52, West Lafayette, IN 47906.
6836	Lonza Inc., 90 Boroline Rd., Allendale, NJ 07401.
7792	Roebic Laboratories, Inc., Agent: Landis International, Inc., 3185 Madison Highway, P.O. Box 5126, Valdosta, GA 31605–5126.
8622	ICL–IP America, Inc., 95 MacCorkle Avenue, Southwest, South Charleston, WV 25303.
9688	Chemsico, Div. of United Industries Corp., P.O. Box 142642, St. Louis, MO 63114–0642.
43813	Janssen PMP Janssen Pharmaceutica NV, 1125 Trenton-Harbourton Road, Titusville, NJ 08560–0200.
47000	Chem-Tech, LTD., 4515 Fleur Dr. #303, Des Moines, IA 50321.
47371	H & S Chemicals Division, c/o Lonza Inc., 90 Boroline Road, Allendale, NJ 07401.
48273	Marman USA Inc., Agent: Nufarm Inc., 150 Harvester Drive, Suite 200, Burr Ridge, IL 60527.
62719	Dow Agrosciences LLC, 9330 Zionsville Rd 308/2E, Indianapolis, IN 46268–1054.
73049	Valent Biosciences Corp., 870 Technology Way, Suite 100, Libertyville, IL 60048–6316.
CA780167, CA940008, DE040003, ID070010, ID070013, ID910015, ID940011, ID970015, KS950001, MT900001, ND050005, NV870009, OR080010, OR080015, OR080029, OR080030, SC910003, TN080006, TX940006, UT960006, WA040020, WA070009, WA070011, WA870029, WA910033.	Chemtura Corp. Attn: Crop Registration, 199 Benson Road (2–5), Middlebury, CT 06749.

III. What is the Agency's authority for taking this action?

Section 6(f)(1) of FIFRA provides that a registrant of a pesticide product may at any time request that any of its pesticide registrations be canceled. FIFRA further provides that, before acting on the request, EPA must publish a notice of receipt of any such request in the **Federal Register**.

Section 6(f)(1)(B) of FIFRA requires that before acting on a request for voluntary cancellation, EPA must

provide a 30-day public comment period on the request for voluntary cancellation or use termination. In addition, FIFRA section 6(f)(1)(C) requires that EPA provide a 180-day comment period on a request for voluntary cancellation or termination of any minor agricultural use before granting the request, unless:

1. The registrants request a waiver of the comment period, or

2. The EPA Administrator determines that continued use of the pesticide would pose an unreasonable adverse effect on the environment.

The registrants in Table 4 of Unit II. have requested that EPA waive the 180-day comment period. Accordingly, EPA will provide a 30-day comment period on the proposed requests.

IV. Procedures for Withdrawal of Request

Registrants who choose to withdraw a request for cancellation should submit such withdrawal in writing to the person listed under **FOR FURTHER INFORMATION CONTACT**. If the products have been subject to a previous cancellation action, the effective date of cancellation and all other provisions of any earlier cancellation action are controlling.

V. Provisions for Disposition of Existing Stocks

Existing stocks are those stocks of registered pesticide products that are currently in the United States and that were packaged, labeled, and released for shipment prior to the effective date of the cancellation action. Upon cancellation of the products identified in Tables 1, 2, and 3 of Unit II, the Agency will allow existing stocks provisions as follows:

A. Registrations Listed in Table 1 of Unit II Except Nos. 000056–00056 and 000056–00069

The Agency anticipates allowing registrants to sell and distribute existing stocks of these products for 1 year after publication of the Cancellation Order in the **Federal Register**. Thereafter, registrants will be prohibited from selling or distributing the pesticides identified in Table 1 of Unit II., except for export consistent with FIFRA section 17 or for proper disposal. Persons other than registrants will generally be allowed to sell, distribute, or use existing stocks until such stocks are exhausted, provided that such sale, distribution, or use is consistent with the terms of the previously approved labeling on, or that accompanied, the canceled products.

B. Registration Nos. 000056–00056 and 000056–00069

All sale or distribution of existing stocks by the registrants is prohibited after issuance of the cancellation order, except for export consistent with FIFRA section 17 or for proper disposal. Persons other than the registrant may continue to sell and/or use existing stocks of cancelled products until such stocks are exhausted, provided that such use is consistent with the terms of the previously approved labeling on, or that accompanied, the cancelled products. If the Agency determines that the final cancellation order should contain existing stocks provisions different than the ones just described, the Agency will publish the cancellation order in the **Federal Register**.

C. Registrations Listed in Table 2 of Unit II

All sale or distribution of existing stocks by the registrants is prohibited after publication of the cancellation order, unless that sale or distribution is solely for the purpose of facilitating disposal or export of the products.

Existing stocks may be sold and distributed by persons other than the registrant for 120 days after the date of publication of the cancellation order.

Existing stocks may be used until exhausted, provided that such use complies with the EPA-approved label and labeling of the products.

D. Registrations Listed in Table 3 of Unit II

The effective date of cancellation will be the date of the cancellation order. The Agency anticipates allowing registrants to sell and distribute existing stocks of these products until January 15, 2012, 1 year after the date on which the maintenance fee was due. Thereafter, registrants will be prohibited from selling or distributing the pesticides identified in Table 2 of Unit II., except for export consistent with FIFRA section 17 or for proper disposal. Persons other than registrants will generally be allowed to sell, distribute, or use existing stocks until such stocks are exhausted, provided that such sale, distribution, or use is consistent with the terms of the previously approved labeling on, or that accompanied, the canceled products.

List of Subjects

Environmental protection, Pesticides and pests.

Dated: April 22, 2011.

Richard P. Keigwin, Jr.,

Director, Pesticide Re-evaluation Division, Office of Pesticide Programs.

[FR Doc. 2011–10709 Filed 5–3–11; 8:45 am]

BILLING CODE 6560–50–P

ENVIRONMENTAL PROTECTION AGENCY

[EPA–HQ–OPP–2011–0381 FRL–8872–1]

Fenoxycarb, Sodium Tetrathiocarbonate, and Temephos; Registration Review Proposed Decisions; Notice of Availability

AGENCY: Environmental Protection Agency (EPA).

ACTION: Notice.

SUMMARY: This notice announces the availability of EPA's proposed registration review decisions for the pesticides listed in the table in Unit II.A. and opens a public comment period on the proposed decisions. Registration review is EPA's periodic review of pesticide registrations to ensure that each pesticide continues to satisfy the statutory standard for registration, that is, that the pesticide can perform its intended function without unreasonable adverse effects on human health or the environment. Through this program, EPA is ensuring that each pesticide's registration is based on current scientific and other knowledge, including its effects on human health and the environment.

DATES: Comments must be received on or before July 5, 2011.

ADDRESSES: Submit your comments, identified by the docket identification (ID) number for the specific pesticide of interest provided in the table in Unit II.A., by one of the following methods:

- *Federal eRulemaking Portal: http://www.regulations.gov.* Follow the on-line instructions for submitting comments.
- *Mail:* Office of Pesticide Programs (OPP) Regulatory Public Docket (7502P), Environmental Protection Agency, 1200 Pennsylvania Ave., NW., Washington, DC 20460–0001.
- *Delivery:* OPP Regulatory Public Docket (7502P), Environmental Protection Agency, Rm. S–4400, One Potomac Yard (South Bldg.), 2777 S. Crystal Dr., Arlington, VA. Deliveries are only accepted during the Docket Facility's normal hours of operation (8:30 a.m. to 4 p.m., Monday through Friday, excluding legal holidays). Special arrangements should be made for deliveries of boxed information. The Docket Facility telephone number is (703) 305–5805.

Instructions: Direct your comments to the docket ID number for the specific pesticide of interest provided in the table in Unit II.A. EPA's policy is that all comments received will be included in the docket without change and may be made available on-line at *http://www.regulations.gov,* including any personal information provided, unless the comment includes information claimed to be Confidential Business Information (CBI) or other information whose disclosure is restricted by statute. Do not submit information that you consider to be CBI or otherwise protected through regulations.gov or -mail. The regulations.gov Web site is an "anonymous access" system, which means EPA will not know your identity or contact information unless you provide it in the body of your comment. If you send an e-mail comment directly to EPA without going through regulations.gov, your e-mail address will be automatically captured and included as part of the comment that is placed in the docket and made available on the Internet. If you submit an electronic comment, EPA recommends that you include your name and other contact information in the body of your comment and with any disk or CD–ROM you submit. If EPA cannot read your comment due to technical difficulties and cannot contact you for clarification, EPA may not be able to consider your comment. Electronic files should avoid the use of special characters, any form of encryption, and be free of any defects or viruses.

Docket: All documents in the docket are listed in the docket index available at *http://www.regulations.gov.* Although listed in the index, some information is not publicly available, *e.g.,* CBI or other information whose disclosure is restricted by statute. Certain other material, such as copyrighted material, is not placed on the Internet and will be publicly available only in hard copy form. Publicly available docket materials are available either in the electronic docket at *http://www.regulations.gov,* or, if only available in hard copy, at the OPP Regulatory Public Docket in Rm. S–4400, One Potomac Yard (South Bldg.), 2777 S. Crystal Dr., Arlington, VA. The hours of operation of this Docket Facility are from 8:30 a.m. to 4 p.m., Monday through Friday, excluding legal holidays. The Docket Facility telephone number is (703) 305–5805.

FOR FURTHER INFORMATION CONTACT: *For pesticide specific information, contact:* The Chemical Review Manager (CRM) for the pesticide of interest identified in the table in Unit II.A.

For general information on the registration review program, contact: Kevin Costello, Pesticide Re-evaluation Division (7508P), Office of Pesticide Programs, Environmental Protection Agency, 1200 Pennsylvania Ave., NW., Washington, DC 20460–0001; telephone number: (703) 305–5026; fax number: (703) 308–8090; e-mail address: *costello.kevin@epa.gov.*

SUPPLEMENTARY INFORMATION:

I. General Information

A. Does this action apply to me?

This action is directed to the public in general, and may be of interest to a wide range of stakeholders including environmental, human health, farm worker, and agricultural advocates; the chemical industry; pesticide users; and members of the public interested in the sale, distribution, or use of pesticides. Since others also may be interested, the Agency has not attempted to describe all the specific entities that may be affected by this action. If you have any questions regarding the applicability of this action to a particular entity, consult the CRM listed under **FOR FURTHER INFORMATION CONTACT**.

B. What should I consider as I prepare my comments for EPA?

1. *Submitting CBI.* Do not submit this information to EPA through regulations.gov or e-mail. Clearly mark the part or all of the information that you claim to be CBI. For CBI information in a disk or CD–ROM that you mail to EPA, mark the outside of the disk or CD–ROM as CBI and then identify electronically within the disk or CD–ROM the specific information that is claimed as CBI. In addition to one complete version of the comment that includes information claimed as CBI, a copy of the comment that does not contain the information claimed as CBI must be submitted for inclusion in the public docket. Information so marked will not be disclosed except in accordance with procedures set forth in 40 CFR part 2.

2. *Tips for preparing your comments.* When submitting comments, remember to:

i. Identify the document by docket ID number and other identifying information (subject heading, **Federal Register** date and page number).

ii. Follow directions. The Agency may ask you to respond to specific questions or organize comments by referencing a Code of Federal Regulations (CFR) part or section number.

iii. Explain why you agree or disagree; suggest alternatives and substitute language for your requested changes.

iv. Describe any assumptions and provide any technical information and/or data that you used.

v. If you estimate potential costs or burdens, explain how you arrived at your estimate in sufficient detail to allow for it to be reproduced.

vi. Provide specific examples to illustrate your concerns and suggest alternatives.

vii. Explain your views as clearly as possible, avoiding the use of profanity or personal threats.

viii. Make sure to submit your comments by the comment period deadline identified.

II. Background

A. What action is the Agency taking?

In accordance with 40 CFR 155.58, this notice announces the availability of EPA's proposed registration review decisions for the pesticides shown in the following table, and opens a 60-day public comment period on the proposed decisions.

Fenoxycarb is an O-ethyl carbamate derivative insecticide used to control fire ants and big-headed ants on turf, home lawns, agricultural areas, non-agricultural areas, horse farms, and ornamental nursery stock, among other areas. Fenoxycarb is also used to control a variety of insects in greenhouses in a total release fogger product.

Sodium tetrathiocarbonate is a soil fumigant used for the management of nematodes and phytophthora root rot, oak root fungus, and phylloxera. It is registered for use on grapes, citrus, almonds, peaches, prunes, and plums only in the states of Arizona, California, Oregon, and Washington.

Temephos is a non-systemic organophosphate insecticide which is applied to standing water, shallow ponds, lakes, woodland pools, tidal waters, marshes, swamps, waters high in organic content, highly polluted water, catch basins (and similar areas where mosquitoes may breed), stream margins, and intertidal zones of sandy beaches. Target pests include aquatic larvae of mosquitoes, midges, gnats, punkies, and sandflies.

TABLE—REGISTRATION REVIEW PROPOSED FINAL DECISIONS

Registration review case name and number	Pesticide docket ID No.	CRM name, telephone number, e-mail address
Fenoxycarb, Case No. 7401	EPA–HQ–OPP–2006–0111	Dana Friedman, (703) 347–8827, *friedman.dana@epa.gov.*
Sodium Tetrathiocarbonate, Case No. 7009.	EPA–HQ–OPP–2007–1084	Katherine St. Clair, (703) 347–8778, *stclair.katherine@epa.gov.*
Temephos, Case No. 0006	EPA–HQ–OPP–2008–0444	Katherine St. Clair, (703) 347–8778, *stclair.katherine@epa.gov.*

The registration review docket for a pesticide includes earlier documents related to the registration review of the case. For example, the review opened with the posting of a Summary Document, containing a Preliminary Work Plan, for public comment. A Final Work Plan was posted to the docket following public comment on the initial docket.

As stated in the fenoxycarb, sodium tetrathiocarbonate, and temephos Preliminary Work Plans and Final Work Plans for registration review, the Agency had intended to revise the existing risk assessments. However, after the publication of the Final Work Plans, pursuant to section 6(f)(1) of the Federal Insecticide, Fungicide, and Rodenticide Act (FIFRA), as amended, the Agency announced receipt of requests to voluntarily cancel all fenoxycarb, sodium tetrathiocarbonate, and temephos product registrations from the registrants of these pesticides. After a 30-day comment period, the EPA granted the voluntary cancellation requests, establishing effective cancellation dates for all of the products registered for use in the United States containing the active ingredient, fenoxycarb on December 31, 2012 (December 30, 2010, 75 FR 82387) (FRL–8854–8), sodium tetrathiocarbonate on February 25, 2011 (February 25, 2011, 76 FR 10587) (FRL–8863–4), and temephos on December 31, 2015 (February 25, 2011, 76 FR 10587) (FRL–8863–4).

Following public comment, the Agency will issue final registration review decisions for products containing the pesticides listed in the table in Unit II.A.

The registration review program is being conducted under congressionally mandated time frames, and EPA recognizes the need both to make timely decisions and to involve the public. Section 3(g) of the Federal Insecticide, Fungicide, and Rodenticide Act (FIFRA), as amended, required EPA to establish by regulation procedures for reviewing pesticide registrations, originally with a goal of reviewing each pesticide's registration every 15 years to ensure that a pesticide continues to meet the FIFRA standard for registration. The Agency's final rule to implement this program was issued in August 2006 and became effective in October 2006, and appears at 40 CFR part 155, subpart C. The Pesticide Registration Improvement Act of 2003 (PRIA) was amended and extended in September 2007. FIFRA, as amended by PRIA in 2007, requires EPA to complete registration review decisions by October 1, 2022, for all pesticides registered as of October 1, 2007.

The registration review final rule at 40 CFR 155.58(a) provides for a minimum 60-day public comment period on all proposed registration review decisions. This comment period is intended to provide an opportunity for public input and a mechanism for initiating any necessary amendments to the proposed decision. All comments should be submitted using the methods in **ADDRESSES**, and must be received by EPA on or before the closing date. These comments will become part of the docket for the pesticides included in the table in Unit II.A. Comments received after the close of the comment period will be marked "late." EPA is not required to consider these late comments.

The Agency will carefully consider all comments received by the closing date and will provide a "Response to Comments Memorandum" in the docket. The final registration review decision will explain the effect that any comments had on the decision and provide the Agency's response to significant comments.

Background on the registration review program is provided at: *http://www.epa.gov/oppsrrd1/registration_review.* Links to earlier documents related to the registration review of these pesticides are provided at: *http://www.epa.gov/oppsrrd1/registration_review/reg_review_status.htm.*

B. What is the Agency's authority for taking this action?

Section 3(g) of FIFRA and 40 CFR part 155, subpart C, provide authority for this action.

List of Subjects

Environmental protection, Administrative practice and procedure, Pesticides and pests.

Dated: April 22, 2011.

Richard P. Keigwin, Jr.,

Director, Pesticide Re-evaluation Division, Office of Pesticide Programs.

[FR Doc. 2011–10560 Filed 5–3–11; 8:45 am]

BILLING CODE 6560–50–P

ENVIRONMENTAL PROTECTION AGENCY

[FRL–9302–1]

Children's Health Protection Advisory Committee; Request for Nominations to the Children's Health Protection Advisory Committee

AGENCY: Environmental Protection Agency (EPA).

ACTION: Notice.

SUMMARY: The U.S. Environmental Protection Agency (EPA) invites nominations from a range of qualified candidates to be considered for appointment to its Children's Health Protection Advisory Committee. Vacancies are anticipated to be filled by December 2011. Sources in addition to this **Federal Register** Notice may also be used to solicit nominees.

Background: The Children's Health Protection Advisory Committee is a Federal advisory committee chartered under the Federal Advisory Committee Act (FACA), Public Law 92–463. EPA established this Committee in 1997 to provide independent advice to the EPA Administrator on a broad range of environmental issues affecting children's health.

Members are appointed by the EPA Administrator for two year terms with the possibility of reappointment to a second term. The Committee usually

meets 2–3 times annually and the average workload is approximately 10 to 15 hours per month. EPA provides reimbursement for travel and other incidental expenses associated with official government business, but members must be able to cover expenses prior to reimbursement.

The CHPAC is looking for representatives from the private sector, state and local government, academia (including a graduate level student representative), NGOs, public health practitioners, pediatricians, obstetrics, occupational medicine, community nurses, environmental groups, health groups, health research, epidemiology and toxicology. We are looking for experience in children's environmental health policy, and in specific issues such as lead poisoning and asthma, chemical exposures, public health information tracking, knowledge of EPA regulation development, risk assessment, exposure assessment, tribal children's environmental health and children's environmental health disparities. EPA encourages nominations from all racial and ethnic groups.

The following criteria will be used to evaluate nominees:

—The ability of candidate to effectively contribute to discussions and provide useful recommendations on the following issues: Risk assessment, exposure assessment and children's health; Air quality, both indoor and outdoor, regulations, policies, outreach and communication; Water quality, regulations, policies, outreach and communication; Prenatal exposures and health outcomes; Chemical exposures, pesticide exposures, health outcomes, policy and regulation; Asthma disparities and other environmental health disparities; America's Children and the Environment and other data and information collection issues; Lead, mercury and other heavy metal concerns for children's health; Exposures that affect children's health in homes, schools, child care centers; Building capacity among health providers to prevent, diagnose and treat environmental health conditions in children.

—The background and experience that would contribute to the diversity of perspectives on the committee (*e.g.,* geographic, economic, social, cultural, educational, and other considerations).

—Ability to volunteer time to attend meetings 2–3 times a year in Washington, DC, participate in teleconference meetings, develop recommendations to the Administrator, and prepare reports and advice letters.

Nominations must include a resume and a short biography describing the professional and educational qualifications of the nominee, as well as the nominee's current business address, e-mail address, and daytime telephone number. Interested candidates may self-nominate.

To help the Agency in evaluating the effectiveness of its outreach efforts, please tell us how you learned of this opportunity.

Submit nominations by May 20, 2011 to: Martha Berger, Designated Federal Officer, Office of Children's Health Protection, U.S. Environmental Protection Agency, Mail Code 1107T, 1301 Constitution Avenue, NW., Washington, DC 20460. You may also e-mail nominations with subject line CHPAC 2011 to *berger.martha@epa.gov.*

FOR FURTHER INFORMATION CONTACT: Martha Berger, Designated Federal Officer, U.S. EPA; telephone (202) 564–2191.

Dated: April 19, 2011.

Martha Berger,

Designated Federal Officer.

[FR Doc. 2011–10886 Filed 5–3–11; 8:45 am]

BILLING CODE 6560–50–P

FEDERAL COMMUNICATIONS COMMISSION

Information Collection Being Submitted for Review and Approval to the Office of Management and Budget (OMB)

SUMMARY: The Federal Communications Commission, as part of its continuing effort to reduce paperwork burden invites the general public and other Federal agencies to take this opportunity to comment on the following information collection(s), as required by the Paperwork Reduction Act (PRA) of 1995. Comments are requested concerning: (a) Whether the proposed collection of information is necessary for the proper performance of the functions of the Commission, including whether the information shall have practical utility; (b) the accuracy of the Commission's burden estimate; (c) ways to enhance the quality, utility, and clarity of the information collected; (d) ways to minimize the burden of the collection of information on the respondents, including the use of automated collection techniques or other forms of information technology; and (e) ways to further reduce the information collection burden for small business concerns with fewer than 25 employees.

The FCC may not conduct or sponsor a collection of information unless it displays a currently valid control number. No person shall be subject to any penalty for failing to comply with a collection of information subject to the Paperwork Reduction Act (PRA) that does not display a currently valid OMB control number.

DATES: Written Paperwork Reduction Act (PRA) comments should be submitted on or before June 3, 2011. If you anticipate that you will be submitting PRA comments, but find it difficult to do so within the period of time allowed by this notice, you should advise the FCC contact listed below as soon as possible.

ADDRESSES: Direct all PRA comments to Nicholas A. Fraser, Office of Management and Budget, via fax at 202–395–5167 or via e-mail to *Nicholas_A._Fraser@omb.eop.gov* and to the Federal Communications Commission via e-mail to *PRA@fcc.gov* and *Cathy.Williams@fcc.gov.* To view a copy of this information collection request (ICR) submitted to OMB: (1) Go to the Web page *http://reginfo.gov/public/do/PRAMain,* (2) look for the section of the Web page called "Currently Under Review," (3) click on the downward-pointing arrow in the "Select Agency" box below the "Currently Under Review" heading, (4) select "Federal Communications Commission" from the list of agencies presented in the "Select Agency" box, (5) click the "Submit" button to the right of the "Select Agency" box, and (6) when the list of FCC ICRs currently under review appears, look for the title of this ICR (or its OMB Control Number, if there is one) and then click on the ICR Reference Number to view detailed information about this ICR.

FOR FURTHER INFORMATION CONTACT: For additional information or copies of the information collection(s), contact Cathy Williams on (202) 418–2918.

SUPPLEMENTARY INFORMATION: *OMB Control Number:* 3060–0717.

Title: Billed Party Preference for InterLATA 0+ Calls, CC Docket No. 92–77, 47 CFR Sections 64.703(a), 64.709, 64.710.

Form Number: N/A.

Type of Review: Extension of a currently approved collection.

Respondents: Business or other for-profit entities.

Number of Respondents and Responses: 1,418 respondents and 11,250,150 responses.

Estimated Time per Response: 1 minute (.017 hours)—50 hours.

Frequency of Response: Annual and on occasion reporting requirements.

Obligation to Respond: Required to obtain or retain benefits. The statutory authority for this information collection is found at 47 U.S.C. 226, Telephone Operator Services, Public Law 101–435, 104 Stat. 986, codified at 47 CFR 64.703(a) Consumer Information, 64.709 Informational Tariffs, and 64.710 Operator Services for Prison Inmate Phones.

Total Annual Burden: 205,023 hours.

Total Annual Cost: $116,250.

Nature and Extent of Confidentiality: An assurance of confidentiality is not offered because this information collection does not require the collection of personally identifiable information (PII) from individuals.

Privacy Impact Assessment: No impact(s).

Needs and Uses: Pursuant to 47 CFR 64.703(a), Operator Service Providers (OSPs) are required to disclose, audibly and distinctly to the consumer, at no charge and before connecting any interstate call, how to obtain rate quotations, including any applicable surcharges. 47 CFR 64.710 imposes similar requirements on OSPs to inmates at correctional institutions. 47 CFR 64.709 codifies the requirements for OSPs to file informational tariffs with the Commission. These rules help to ensure that consumers receive information necessary to determine what the charges associated with an OSP-assisted call will be, thereby enhancing informed consumer choice in the operator services marketplace.

Federal Communications Commission.

Marlene H. Dortch,

Secretary, Office of the Secretary, Office of Managing Director.

[FR Doc. 2011–10803 Filed 5–3–11; 8:45 am]

BILLING CODE 6712–01–P

FEDERAL COMMUNICATIONS COMMISSION

Information Collection(s) Being Reviewed by the Federal Communications Commission

AGENCY: Federal Communications Commission.

ACTION: Notice and Request for comments.

SUMMARY: The Federal Communications Commission, as part of its continuing effort to reduce paperwork burden invites the general public and other Federal agencies to take this opportunity to comment on the following information collection(s), as required by the Paperwork Reduction Act (PRA) of 1995. Comments are requested concerning: (a) Whether the proposed collection of information is necessary for the proper performance of the functions of the Commission, including whether the information shall have practical utility; (b) the accuracy of the Commission's burden estimates; (c) ways to enhance the quality, utility, and clarity of the information collected; (d) ways to minimize the burden of the collection of information on the respondents, including the use of automated collection techniques or other forms of information technology; and (e) ways to further reduce the information collection burden on small business concerns with fewer than 25 employees.

The FCC may not conduct or sponsor a collection of information unless it displays a currently valid OMB control number. No person shall be subject to any penalty for failing to comply with a collection of information subject to the Paperwork Reduction Act (PRA) that does not display a valid OMB control number.

DATES: Written Paperwork Reduction Act (PRA) comments should be submitted on or before July 5, 2011. If you anticipate that you will be submitting PRA comments, but find it difficult to do so within the period of time allowed by this notice, you should advise the FCC contact listed below as soon as possible.

ADDRESSES: Direct all PRA comments to the Federal Communications Commission. To submit your PRA comments by e-mail send them to: *PRA@fcc.gov.*

FOR FURTHER INFORMATION CONTACT: For additional information, contact Cathy Williams at 202–418–2918 or via the Internet at *Cathy.Williams@fcc.gov.*

SUPPLEMENTARY INFORMATION: *OMB Control Number:* 3060–0169.

Title: Section 43.51 and 43.53, Reports and Records of Communications Common Carriers and Affiliates.

Form No.: N/A.

Type of Review: Extension of a currently approved collection.

Respondents: Business or other for-profit.

Number of Respondents: 63 respondents; 1,218 responses.

Estimated Time Per Response: .25 hours to 25 hours.

Frequency of Response: On occasion and annual reporting requirements, recordkeeping requirement and third party disclosure requirement.

Obligation to Respond: Required to obtain or retain benefits. Statutory authority for this information collection is contained in 47 U.S.C. sections 151–154, 160, 161, 201–205, 211, 218, 220, 226, 303(g), 303(r), and 332.

Total Annual Burden: 5,247 hours.

Total Annual Cost: N/A.

Privacy Act Impact Assessment: N/A.

Nature and Extent of Confidentiality: In general, there is no need for confidentiality. However, respondents may request materials or information submitted to the Commission be withheld from public inspection under 47 CFR 0.459 of the Commission's rules.

Needs and Uses: The Commission will submit this expiring information collection to the Office of Management and Budget (OMB) after this 60 day comment period in order to obtain the full three year clearance from them. The Commission is requesting OMB approval for an extension (no change in the reporting, recordkeeping and/or third party disclosure requirements).

There is no change in the Commission's previous burden estimates.

Sections 43.51 and 43.53 require common carriers to submit reports so that the FCC can monitor various activities of these carriers to determine the impact on the just and reasonable rates required by the Communications Act of 1934, as amended.

Section 43.51 requires that any communications common carrier described in paragraph 43.51(b) of the Commissions' rules file with the Commission, within 30 days of execution a copy of each contract, agreement, concession, license, authorization, operating agreement or other agreement to which it is a party and any amendments.

Section 43.53 requires each communications common carrier engage directly in the transmission or reception of telegraph communications between the continental United States and any foreign country to file a report with the Commission within 30 days of the date of any arrangement concerning the division of the total telegraph charges on such communications other than transiting.

OMB Control Number: 3060–1120.

Title: Service Quality Measure Plan for Interstate Special Access Quarterly Reporting Requirements.

Form No.: N/A.

Type of Review: Revision of a currently approved collection.

Respondents: Business or other for-profit.

Number of Respondents: 3 respondents; 12 responses.

Estimated Time Per Response: 25 hours.

Frequency of Response: Quarterly reporting requirement, recordkeeping requirement and third party disclosure requirement.

Obligation to Respond: Required to obtain or retain benefits. Statutory authority for this information collection is contained in 47 U.S.C. sections 151,152, 154(i), 154(j), 201–204, 214, 220(a), 251, 252, 271, 272, and 303(r).

Total Annual Burden: 300 hours.

Total Annual Cost: N/A.

Privacy Act Impact Assessment: N/A.

Nature and Extent of Confidentiality: The Commission anticipates that the Bell Operating Companies (BOCs) which are AT&T, Quest and Verizon, may request confidentiality protection for the special access performance information.

Needs and Uses: The Commission will submit this information collection to the Office of Management and Budget (OMB) after this 60 day comment period in order to obtain the full three year clearance from them. The Commission is requesting OMB approval for a revision of this information collection.

The Commission previously adopted two new information collection requirements that received OMB approval. The monthly usage information requirement has expired, pursuant to the terms of the *Section 272 Sunset Order.* The burden for the monthly reporting requirement has been eliminated and we now seek continued OMB approval for the special access performance metric information requirement (quarterly reporting requirement) will be extended (continued).

The Commission has established a new framework to govern the provision of in-region, long-distance services that allows the BOCs to provide in-region, interstate, long distance services either directly or through affiliates that are neither section 272 separate affiliates nor rule 64.1903 affiliates, see *Section 272 Sunset Order,* FCC 07–159.

Because the BOCs are no longer required to comply with the section 272 structural safeguards, the Commission established special access performance metrics reporting requirements, *i.e.,* ordering, provisioning, and repair and maintenance to ensure that the BOCs and their independent incumbent LEC affiliates do not engage in non-price discrimination in the provision of special access services to unaffiliated entities.

The information gleaned from these performance metrics will provide the Commission and other interested parties with reasonable tools to monitor each BOC's performance in providing these special access services to itself and its competitors.

OMB Control Number: 3060–XXXX.

Title: Sections 15.713, 15.714, 15.715 and 15.717, TV White Space Broadcast Bands.

Form No.: N/A.

Type of Review: New collection.

Respondents: Business or other for-profit.

Number of Respondents: 2,000 respondents; 2,000 responses.

Estimated Time Per Response: 2 hours.

Frequency of Response: On occasion reporting requirement, recordkeeping requirement and third party disclosure requirement.

Obligation to Respond: Required to obtain or retain benefits. Statutory authority for this information collection is contained in 154(i), 302, 303(c), 303(f), and 307.

Total Annual Burden: 4,000 hours.

Total Annual Cost: $100,000.

Privacy Act Impact Assessment: N/A.

Nature and Extent of Confidentiality: The Commission is not requesting respondents to submit confidential information to the Commission. Respondents may request that portions of their information remain confidential in accordance with 47 CFR 0.459 of the Commission's rules.

Needs and Uses: The Commission will submit this new information collection to the Office of Management and Budget (OMB) after this 60 day comment period in order to obtain the full three year clearance from them. The Commission is reporting a program change increase of 4,000 total annual burden hours and an increase of $100,000 in annual costs.

On November 14, 2008, the Commission adopted a *Second Report and Order* and *Memorandum Opinion and Order,* FCC 08–260, ET Docket No. 04–186, that established rules to allow new and unlicensed wireless devices to operate in the broadcast television spectrum at locations where that spectrum is not being used by licensed services (this unused TV spectrum is often termed "television white spaces"). The rules will allow for the use of unlicensed TV band devices in the unused spectrum to provide broadband data and other services for consumers and businesses.

Subsequently on September 23, 2010, the Commission adopted a *Second Memorandum Opinion and Order* finalizing the rules to make the unused spectrum in the TV bands available for unlicensed broadband wireless devices. This action resolved on reconsideration certain legal and technical issues in order to provide certainty concerning the rules for operation of unlicensed transmitting devices in the television broadcast frequency bands (unlicensed TV bands devices or "TVBDs"). Resolution of these issues will now allow manufacturers to begin marketing unlicensed communications devices and systems that operate on frequencies in the TV bands in areas where they are not used by licensed services ("TV white spaces").

In the *Second Report and Order* the Commission decided to designate one or more database administrators from the private sector to create and operate TV bands databases. The TV band database administrators will act on behalf of the FCC, but will offer a privately owned and operated service. Each database administrator will be responsible for operation of their database and coordination of the overall functioning of the database with other administrators, and will provide database access to TVBDs.

The Commission also decided that operators of venues using unlicensed wireless microphones will be required to register their sites with the Commission which will transmit the information to the database administrators. The registration request must be filed at least 30 days in advance and the requests will be made public to provide an opportunity for public comment or objections

Federal Communications Commission.

Marlene H. Dortch,

Secretary,

Office of the Secretary,
Office of Managing Director.

[FR Doc. 2011–10804 Filed 5–3–11; 8:45 am]

BILLING CODE 6712–01–P

FEDERAL COMMUNICATIONS COMMISSION

[MB Docket No. 07–269; FCC 11–65]

Annual Assessment of the Status of Competition in the Market for the Delivery of Video Programming

AGENCY: Federal Communications Commission.

ACTION: Notice.

SUMMARY: In this document, the Commission is required to report annually to Congress on the status of competition in markets for the delivery of video programming. This document is soliciting additional information from the public that will allow the Commission to enhance its analysis of the state of competition in the delivery of video programming. Comments and

data submitted in response to this document in conjunction with publicly available information and filings submitted in relevant Commission proceedings will be used for a report to Congress.

DATES: Interested parties may file comments on or before June 8, 2011, and reply comments on or before July 8, 2011.

ADDRESSES: Federal Communications Commission, 445 12th Street, SW., Washington, DC 20554.

FOR FURTHER INFORMATION CONTACT: Dan Bring, Media Bureau (202) 418–2164, TTY (202) 418–7172, or e-mail at *danny.bring@fcc.gov.*

SUPPLEMENTARY INFORMATION: This is a synopsis of the Commission's *Annual Assessment of the Status of Competition in the Market for Diversity of Video Programming,* Further Notice of Inquiry (FNOI), in MB Docket No. 07–269, FCC–11–65, released April 21, 2011. The complete text of the document is available for inspection and copying during normal business hours in the FCC Reference Center, 445 12th Street, SW., Washington, DC 20554, and may also be purchased from the Commission's copy contractor, BCPI, Inc., Portals II, 445 12th Street, SW., Washington, DC 20054. Customers may contact BCPI, Inc. at their Web site *http://www.bcpi.com* or call 1–800–378–3160.

Synopsis of Further Notice of Inquiry

1. Section 628(g) of the Communications Act of 1934, as amended (the Act) requires the Commission to report annually on "the status of competition in the market for the market for the delivery of video programming." This FNOI solicits data, information, and comment on the state of competition in the delivery of video programming for the Commission's Fourteenth Report (*14th Report*). Using the information collected pursuant to this FNOI, we seek to enhance our analysis of competitive conditions, better understand the implications for the American consumer, and provide a solid foundation for Commission policy making with respect to the delivery of video programming to consumers.

2. Pursuant to its statutory mandate, in 2009, for the *14th Report,* the Commission released a *Notice of Inquiry,* released January 16, 2009, to solicit data, information, and comment for 2007 and a *Supplemental Notice of Inquiry,* released April 9, 2009, to request data, information and comment for 2008, and 2009, similar to that which had been requested for earlier years. However, since that time, the Commission has initiated a comprehensive review of the way in which it uses data, including data used for its statutory competition reports. In the course of that review, we determined that the data submitted in response to the notices of inquiry for the *14th Report* are insufficient to produce an adequate report. We are therefore requesting additional data for 2009 and for the first time asking for data for 2010. In submitting additional data for 2009 and new data for 2010, to the extent that it is not unduly burdensome, we encourage commenters to also submit comparable historical data for 2007 and 2008, which will facilitate the Commission's analysis of trends.

3. We intend to adopt a number of changes to our analytic framework to ensure that we are collecting and presenting the most useful information concerning competition in the video programming market. Of particular note, in the *14th Report,* we plan to include online video distributors (OVDs) for the first time, in light of the growing importance of online video distribution to consumers. An OVD is any entity that provides video programming by means of the Internet or other Internet Protocol (IP) based transmission path provided by a person or entity other than the OVD. Under our new analytic framework, we first will categorize entities that deliver video programming into one of three groups: multichannel video programming distribution (MVPDs), broadcast television stations, and OVDs. Second, we will examine industry structure, conduct, and performance. Third, we will look upstream and downstream to examine the influence of industry inputs and consumer behavior on the delivery of video programming. We expect to discuss three key upstream industry inputs: Video content creators, video content aggregators, and consumer premises equipment. We seek comment on whether this proposed analytic framework is a useful way for the Commission to assess and report on the status of video programming competition.

4. The data reported in previous reports on the status of competition for the delivery of video programming were derived from various sources, including data the Commission collects in other contexts (*e.g.,* FCC Form 477 and FCC Form 325), comments filed in response to notices of inquiry and other Commission proceedings; publicly available information from industry associations; company filings and news releases; Security and Exchange Commission filings; trade and industry publications; research firms' publicly-available data; equity analysts' reports; scholarly publications; and vendor product releases and white papers. We seek comment on whether there are additional data sources available for our analysis. What other sources of data, especially quantitative data, should we use to perform a comprehensive analysis of the delivery of video programming? Are there certain stakeholders that should be reached out to in order to diversify the data and further supplement the record? We also ask commenters to suggest how we can best use this information to report on competition for the delivery of video programming.

5. In previous *Notice of Inquiries,* we have requested data as of June 30 of the relevant year to monitor trends on an annual basis. To continue our time-series analysis, we request data as of June 30, 2009, and June 30, 2010. We also recognize that a significant amount of data and information are reported on a calendar year basis, and, as such, we ask commenters to provide year-end 2009 and year-end 2010, when readily available and relevant.

6. We request data, information, and comment from entities that provide delivered video programming directly to consumers. These entities include MVPDs, broadcast television stations, and OVDs. We also seek data, information, and comment from entities that provide key inputs into video programming distribution. These include content creators, content aggregators, and manufacturers of consumer premises equipment, including equipment that enables consumers to view programming on their television sets as well as on other devices (*e.g.,* smartphones and tablets). In addition, we request data, information, and comment from consumers and consumer groups. We will augment reported information with submissions in other Commission proceedings and from publicly available sources.

Providers of Delivered Video Programming

Multichannel Video Programming Distributors

7. *MVPD Structure.* Previously, we reported separately on many types of competitors in the market for the delivery of video programming including: incumbent cable operators, direct broadcast satellite (DBS), home satellite dishes (HSD), broadband service providers (BSPs), local exchange carriers (LECs), open video systems (OVS), electric and gas utilities, wireless cable systems, private cable operator

(PCO) systems, also known as satellite master antenna (SMATV) systems, commercial mobile radio service (CMRS) and other wireless providers.

8. For each type of MVPD, we seek data on the number of MVPD providers, the number of households passed, the number of subscribers for delivered video programming, and the number of linear channels offered. For each type of MVPD, we seek comment on the geographic area in which individual providers offer service. In addition, we seek comment on the most appropriate unit of measurement for assessing geographic coverage. We note that different types of MVPDs may report data regarding availability and use that is not standardized to a common geographic unit. This greatly hinders our ability to assess the competitive alternatives available to households and to identify where MVPDs are engaged in head-to-head competition. For purposes of determining whether the 70/70 benchmark specified in section 612(g) of the Act has been met, in the *13th Report,* the Commission determined that delivered video subscriber data should be collected on a zip code basis. Is it appropriate to use zip code level data to evaluate the structure of MVPD markets? Is there a significant difference in the data collected if a 5-digit versus a 9-digit zip code is used? We note that we collect data from broadband providers using census tracts. We seek comment on the feasibility of collecting MVPD data on a census tract basis.

9. Previously, we reported on cable overbuilders and LECs that have overbuilt incumbent cable systems. We seek data and information on the number of households that are passed by one wireline MVPD, two wireline MVPDs, and three or more wireline MVPDs. We wish to identify markets and geographic areas where head-to-head wireline competition exists, where wireline entry is likely in the near future, and where wireline competition once existed but failed. We are particularly interested in identifying areas that have access to either Verizon FiOS and AT&T U-verse.

10. Certain wireless providers—DBS, wireless cable systems, HSDs and PCOs—are included within the statutory definition of MVPDs to the extent that they make available for purchase multiple channels of video programming. We seek data and information that explain the principal factors contributing to DBS's growth in the market for delivery of video programming. What factors influence cable subscribers' decisions to switch to DBS and vice versa? We request information identifying differences between DBS subscribers and cable subscribers. For example, are DBS subscribers more likely to reside in rural areas or areas not served by cable systems? We seek updated information on the geographic characteristics of DBS subscribership. What percentage of households cannot receive DBS service because they are not within the line-of-site of the satellite signal? We request updated information on the number of markets where DBS operators provide local-into-local broadcast service. Is DBS penetration higher in areas where local-into-local service is available? What effect, if any, does the inability of DBS operators to directly provide broadband and voice service along with their video service have on competition among MVPDs?

11. In addition, several operators of wireless cable systems in the 2.5 GHz band continue to provide multiple channels of video programming under the Commission's rules for opting out of the transition of this band. We seek comment on how and to what extent these wireless cable systems are competing with other MVPDs. Finally, we seek comment on other wireless MVPDs such as HSDs and PCOs.

12. The Commission has not addressed the extent to which wireless providers offering video programming to mobile phones and other wireless devices should be classified as MVPDs under the Act, and we do not intend to do so within this proceeding. For the *14th Report,* we seek comment on the competitive impact that these wireless providers have on MVPDs and on competition in the provision of video programming generally. How and to what extent are wireless technologies being used to provide video programming today, and what trends should we anticipate for the future? To what extent do these services compete with the video programming services offered by MVPDs and by other providers of video programming?

13. We seek comment on the appropriate methodology for calculating concentration in delivered video services. Should we continue to consider MVPDs a separate product market, or are there narrower or broader product segments we should consider? What are the appropriate geographic markets associated with these product markets (*e.g.,* individual households, zip codes, census tracts, cable franchise areas, or metropolitan areas)? Instead of assessing concentration on a national level as we have done in the past, should we instead follow the methodology used in *14th Mobile Wireless Report* to assess horizontal concentration at a finer level of granularity? In the *14th Report,* we also propose to identify the geographic areas and number of households having a choice of no MVPDs, one MVPD, two MVPDs, three MVPDs, four MVPDs, and five or more MVPDs to assess consumer choice at the local level. We seek comment on the value of our proposed approach and request data, or recommendations for data we can acquire, that will enable us to perform this analysis. We invite analysis regarding the relationship between horizontal concentration and competition. To what extent does horizontal concentration affect price or quality?

14. In previous reports, we have discussed vertical integration in terms of ownership affiliations between cable programming networks and cable operators. For our *14th Report,* we request data, information, and comment on vertical integration between MVPDs and video programming networks. We request information on satellite and terrestrially delivered national and regional networks. How should we measure such vertical integration? For purposes of analyzing vertical integration, how should we determine affiliation? Should we use a minimum ownership share or apply the attribution rules? Should we simply note which MVPDs are integrated with program networks, or should we also measure the fraction of programming revenues accounted for by firms affiliated with an MVPD? What data should we collect to analyze affiliation and revenue? To measure the extent to which MVPDs and cable networks are vertically integrated, we seek comment on whether to count a standard definition (SD) and a high definition (HD) version of the same programming network as one or more networks. We also seek comment on how to evaluate multiplexed programming networks.

15. A number of provisions of the Act and the Commission's rules affect MVPD operators in the market for the delivery of video programming. These include, for example, regulations governing program access, program carriage, must carry, retransmission consent, franchising, access to multiple dwelling units, inside wiring, customer service, leased access, ownership, and public interest programming. We seek comment on the impact of these regulations and other Commission rules on MVPD entry and rivalry among MVPDs in markets for the delivery of video programming. We also seek comment on specific actions the Commission could take to facilitate MVPD entry and rivalry among MVPDs and thereby to increase consumer

choice in the delivery of video programming. In addition, we seek comment on any state or local regulations that affect MVPD entry and rivalry among MVPDs.

16. We seek information and comment on non-regulatory conditions affecting MVPD entry and rivalry. Do these conditions include supply-side economies of scale, where large MVPDs can spread fixed costs over more subscribers or negotiate lower prices for video content? Do these conditions also include expected retaliation, where potential MVPD entrants believe incumbents will lower prices to any household considering switching to the new MVPD entrant? Does bundling MVPD services with broadband, and bundling channels into tiers rather than selling channels à la carte, affect entry and rivalry? Do long-term contracts with penalties for early termination affect entry and rivalry? What other non-regulatory conditions affect MVPD entry and rivalry?

17. *MVPD Conduct.* What is the capacity being used for public, educational, and governmental (PEG) channels by MVPDs? What tier are these channels on and is extra equipment required to view them? Are there more or fewer PEG channels carried on your systems than last year? What data sources are available to track availability of PEG programming, and changes to PEG availability?

18. We seek descriptions of the varied business models and strategies used by MVPDs for the delivery of video programming. What are key differences among the business models and strategies in terms of services offered to consumers? How do providers distinguish their delivered video services from their rivals? Are cable and DBS comparable services? Is there a discernable distinction between the type of service that is delivered at a local level or at a national level? Does DBS "local-into-local" delivery of broadcast television signals make it a closer substitute for cable than it would be otherwise? What significance, if any, do distinctions between cable and DBS operators have for Commission precedent concluding that the two transmission technologies compete in the same MVPD product market? To what extent do MVPD offer unique services (*e.g.,* multi-room DVR service), more channels, more high definition, or a variety of bundles to consumers? How do MVPDs advertise their services to existing and potential subscribers? What delivered video services do they feature in their advertising?

19. For each type of MVPD, we seek data on the prices charged for delivered video programming. What prices are subscribers paying for MVPD service? To what extent do MVPDs use promotional or reduced pricing as a competitive strategy? Can consumers easily find the prices of MVPD video packages and services on their monthly bill and/or MVPDs' Web sites and other promotional materials? To what extent do providers of MVPD service use a strategy of reducing prices to attract and retain subscribers? To what extent do MVPDs offer new subscribers price discounts for an introductory period? Do prices change at the end of the introductory period, and, if so, how? Are introductory and long-term prices listed and fixed, or do providers negotiate with individual subscribers over prices before and after introductory periods? Do households that subscribe to the same delivered video services, from the same provider, in the same geographic area, pay different prices? How do bundles of service (*i.e.,* double- or triple-play offerings) change the price of delivered video services? To what extent have MVPDs been adding linear channels and non-linear VOD programming and raising prices as a result? Are there any providers of delivered video programming with a business strategy of offering fewer channels of programming and lowering prices as a result? Are MVPDs packaging programming by offering tiers of programming by genre (*e.g.,* family tiers, sports tiers)? If so, how are they priced? We also seek information on the competitive strategies of MVPDs in providing VOD programming. Specifically, we are interested in learning about any competitive issues MVPDs encounter when acquiring VOD content from video content aggregators.

20. We are particularly interested in learning whether an increase in the number of MVPD rivals affects pricing strategies. For example, do DBS firms price uniformly across large regions or do they, for example, charge lower prices (or use different pricing strategies) for households that have access to a cable provider than for households that do not have access to a cable provider? Do DBS and cable firms charge lower prices (or use different pricing strategies) for households that have access to more than one wireline MVPD? For its Annual Cable Price Survey, the Commission collects price data from a sample of cable systems, but does not collect price data for other types of MVPDs (*e.g.,* DBS and AT&T U-verse). We seek price data for DBS, AT&T U-verse and other MVPDs not included in the Annual Cable Price Survey. What additional data sources on MVPD prices are available for our *14th Report*?

21. In addition to offering bundles of video with voice and/or high-speed Internet, some MVPDs tie video products. We seek data, information, and comment on trends regarding the tying of access to some online programming to a subscription to an MVPD. For example, online programming available through TV Everywhere is available only to subscribers of specific MVPDs. In addition, some MVPDs, such as AT&T and Comcast, make video programming available on mobile wireless networks and mobile devices. We seek comment on these and other developments in tying arrangements for video programming delivered over different delivery technologies.

22. We seek data and comment on the provision of local news by MVPDs as a competitive strategy in the delivery of video programming and the extent to which local news programming is available. What other types of local programming do MVPDs offer? What data sources are available to help in our analysis of MVPD provision of local news and other local programming?

23. Have horizontal and/or vertical mergers contributed to, or provided incentives for, the possible exercise of market power by incumbent MVPDs, both downstream to subscribers and upstream to creators and aggregators of video content? Has any MVPD acquired sufficient market power to impair competition? Has the possible exercise of market power by an MVPD adversely affected consumers of video programming, such as by increasing price or restricting quantity of service available to consumers? Has the possible exercise of market power by an MVPD adversely affected creators and aggregators of video programming, such as by decreasing the price paid for video programming?

24. *MVPD Performance.* We seek comment on the information and time-series data we should collect for the analysis of various MVPD performance metrics, including quantity and quality; subscribership and penetration rates; financial performance; and investment and innovation. Are there any other quantitative or qualitative metrics that would enhance our analysis of MVPD performance?

25. We seek data, information, and comment on trends in the number of linear video channels and video on demand (VOD) programs offered by MVPDs. Has the number of linear channels and VOD programs available increased? What are the most popular MVPD programming packages? Describe

these packages in terms of the total number of analog and SD channels, number of HD channels, and number of VOD offerings. What effect has the entry of an additional MVPD had on programming choices and quality of service? What effect has the growth in OVD services had on the quantity and quality of MVPD service?

26. We seek data and information regarding the number of households passed and the number of subscribers and penetration rate for MVPD service. We also seek subscription data for the channel lineup packages (including international, other specific genres, and premium) and other delivered video programming services that MVPDs currently market to consumers. What percentage of customers subscribe to these video packages and other delivered video programming services? How often do consumers switch providers (*i.e.,* what is the level of "churn" and is it increasing or decreasing)?

27. We request information on various measures of MVPD financial performance, including data on MVPD revenues, cash flows, and margins. To the extent possible, we seek five-year time-series data to allow us to analyze trends. Specifically, what is the average revenue per MVPD subscriber? What are the major sources of video-related revenue for MVPDs? What percentage of total revenue is derived from each of these sources? What are the major video-related drivers of revenue growth? We seek data, information, and comments regarding profitability. What metrics and data should we use to measure profitability (*e.g.,* return on invested capital, operating margins)? Are there any other quantitative or qualitative metrics that would add to our analysis of MVPD financial performance?

28. We seek comment on how investment affects competition among MVPDs. How has investment affected competition between MVPDs and other providers of delivered video programming? We seek information on deployment of next generation MVPD technologies. What MVPD services are driving the deployment of new MVPD technologies?

Broadcast Television Stations

29. *Broadcast Television Structure.* The Commission already collects data on the number of broadcast television stations in each designated market area ("DMA") and ownership of broadcast television stations using our CDBS database and data purchased from BIA/Kelsey and The Nielsen Company. Is there a non-proprietary geographic area upon which the Commission could base its analysis? We seek additional data that would help us analyze trends in the number of households that rely exclusively on over-the-air broadcast television service rather than receiving broadcast programming from an MVPD. In addition to the number of households relying on over-the-air broadcast service, we request information regarding any demographic characteristics of such households. How many households routinely view broadcast programming over-the-air in addition to subscribing to an MVPD?

30. The Commission already collects data that we can use to assess the horizontal structure of the broadcast television stations, including the number of stations in each DMA, and the ownership of each station. We seek comment on how to best report this information in order to assess horizontal concentration.

31. We seek data on the vertical structure of the broadcast television. How many broadcast television stations, nationally and within each DMA, are vertically integrated with a broadcast network or a cable network? We seek comment on how to best report this information in order to assess vertical integration.

32. We note that the Commission's spectrum allocation policies, licensing policies, and spectrum interference rules affect the structure of broadcast television by limiting the number of stations that can be located in a geographic area. We seek comment on the effect of these policies and rules on entry and rivalry in broadcast television. Commission rules limit the number of broadcast television stations an entity can own in a DMA and also limit the national audience reach of commonly owned broadcast television stations. We seek data, information, and comment on the effect of ownership limits on entry and rivalry in broadcast television. Does the ability to provide more than one programming stream as a result of the digital transition increase the competitiveness of broadcast stations? What other regulations affect entry and rivalry of broadcast television stations? We ask commenters to provide data and examples for each regulation that effects entry and rivalry.

33. We seek information and comment on non-regulatory conditions affecting entry and rivalry. For example, are there supply-side economies of scale that enable commonly owned broadcast television stations to spread fixed costs over greater audiences? Are there demand-side economies of scale that enable commonly owned broadcast television stations to negotiate lower prices for video programming? We invite analysis of the relationship between the advertising market and entry and exit in broadcast television. What other non-regulatory conditions influence entry and rivalry? To what extent do they influence entry and rivalry? Does the ability to offer multiple programming streams since the digital transition enhance the ability of broadcasters to compete against MVPDs? Do broadcast television stations, collaborating in conjunction with OVDs or other media, have an increased ability to compete with MVPDs?

34. *Broadcast Television Conduct.* We seek data, information, and comment on the use of multiple linear program streams as a business strategy to enhance a broadcaster's competitive position in the delivery of video programming. What types of programming are broadcasters carrying on their multiple streams? To what extent are broadcasters providing multiple linear streams of video programming to attract viewers to over-the-air video service and away from subscription MVPD service? Digital television allows broadcasters to use part of their digital bandwidth for subscription video, datacasting, and other pay services as long as they maintain their primary broadcast television service. Do broadcasters have business plans to combine and transition some of their digital capacity into a subscription service or to lease a portion of their digital spectrum capacity to others for a subscription service? Are broadcasters using HD programming as a strategy to attract viewers? Has digital transmission benefited television broadcasters? We seek comment on specific benefits that have accrued to broadcasters as a result of the transition. Has the transition benefited households that rely solely on over-the-air television service? If so, we seek information on specific advantages that have accrued to these households. Has the digital transition presented particular difficulties for broadcasters or viewers?

35. We seek data, information, and comment on the business strategies of broadcast television stations as they confront changes in the advertising market, both long-term changes and recent changes brought on by the economic downturn. We also seek information regarding any business strategies to grow revenue through retransmission consent fees paid by MVPDs to broadcast stations for the rights to carry their stations. We seek data on trends in prices for spot and local advertising on broadcast television

stations. What prices (per subscriber) are broadcast stations receiving from MVPDs for retransmission consent?

36. To what extent is local broadcast programming available online? How does placing video content online benefit broadcasters? To what extent are broadcast stations tying retransmission consent negotiations with MVPDs for linear programming to online programming?

37. We seek data and comment on the provision of local news as a competitive strategy in the delivery of video programming and the extent to which local news programming is available. We seek comment on the strategies broadcast television stations use to remain the primary distributor of broadcast television network programming, as well as the strategies and partnerships they use to deliver news online. Does the ability to distribute programming online lead some broadcasters to increase their investment in news and information programming or provide news to consumers that might not otherwise be available?

38. What competitive strategies do broadcast television stations use to distinguish themselves from other broadcast television stations? For example, is there local programming other than news used to enhance the competitive position of broadcast stations? We seek data, information, and comment on these other business strategies broadcast television stations use to compete in the delivery of video programming.

39. We seek data, information, and comment on the use of horizontal and vertical mergers to improve the competitive position of broadcast television stations in the delivery of video programming. We seek comment on whether commonly owned stations have a competitive advantage in the delivery of video programming. Do joint sales agreements (JSAs), local marketing agreements (LMAs) and shared services agreements (SSAs) have an effect on independent stations to remain competitive? Does business strategy favor group ownership within a DMA to increase advertising revenue? Does group ownership across DMAs lower prices for video content? Are broadcast television stations that are vertically integrated with a broadcast television network better able to compete in the delivery of video programming?

40. *Broadcast Television Performance.* We seek information and time-series data for the analysis of various performance metrics for broadcast television. These metrics should include the quantity and quality of broadcast television station programming, viewership from over-the-air, viewership from carriage on MVPDs, prices of advertising, revenue from advertising, revenue from retransmission consent fees, other revenue, investment and innovation, and rate of return/profitability.

41. We seek data, information, and comment on the impact of the transition to digital television on the number of linear broadcast television channels available in each DMA, counting both primary stations and additional multicast programming streams. How many broadcast television stations offer video content in HD? What percentage of their programming is in HD?

42. We seek data, information, and comment on the viewership of broadcast television stations both from over-the-air reception and carriage by MVPDs. What is the trend in total viewership in total household terms? With respect to linear programming, what is the trend in the share of the total audience that broadcast television stations receive relative to the share received by cable networks carried by MVPDs. Some broadcast stations also place some of their programming online. How many households view broadcast television stations online? What share of online viewership are broadcasters receiving?

43. We seek data on broadcast television station revenues, cash flows, and margins. To the extent possible, we seek five-year time-series data to allow us to analyze trends. Specifically, what is the average revenue earned per broadcast television station? We realize that some broadcast stations are integrated with other businesses but are only interested in financial data related directly to the delivered video programming of the broadcast television station, such as the sale of advertising tied to the video programming and retransmission consent fees. What are the major drivers of revenue growth? We also seek data regarding the profitability of broadcast television stations. What metrics and data should we use to measure profitability (*e.g.,* return on invested capital, operating margins)? Are there any other quantitative or qualitative metrics that would add to our analysis of the financial performance of the broadcast television station group?

44. We seek comment on how investment in digital television affects competition among broadcast television stations and with the larger market for the delivery of video programming. We seek data on broadcast television station investment in digital television, the innovations related to this investment, and the financial returns on this investment. What has investment in digital television done to enhance the competitive position of broadcast television stations in the delivery of video programming?

Online Video Distributors

45. *OVD Structure.* Over the time period we plan to cover in the *14th Report*—2007 to 2010—OVDs have made an increasing amount of video programming available to consumers over the Internet. We request, data, information, and comment on the number and size of OVDs. What data sources are available for analysis of the structure of OVDs? We also seek comment on whether individual OVDs view other OVDs as competitors. In addition, to what extent do OVDs compete with MVPDs and/or broadcast television stations?

46. *OVD Conduct.* What business models and competitive strategies do OVDs use to compete in the delivery of video programming? What challenges do OVDs face? Do OVDs highlight the availability of increasing amounts of online video to attract more viewers and/or subscribers? What media do OVDs use to advertise their service? To what extent is OVD service a substitute for MVPD service? Or, alternatively, is it a complement to MVPD service? How is OVD service advertised? Do OVDs that are not MVPDs have a different business strategy for attracting subscribers than OVDs that are also MVPDs? We seek data, information, and comment on business strategies that tie OVD service to subscription to MVPD service. We seek information on the extent to which OVDs rely on advertising, subscription fees, per-program fees or other sources of revenue, including information on the use of subscription fees. We also seek information on the prices for the programs or the subscriptions charged by OVDs that sell access to video content over the Internet. To what extent do OVDs rely on a combination of advertising and per-program, subscription, or other fees? Is there a trend among OVDs toward greater reliance on charging consumers?

47. *OVD Performance.* We seek comment on the total amount of video programming available online and the extent to which consumers are viewing video programming offered by OVDs. Has the entry of OVDs in the marketplace resulted in reduced viewership of video programming from MVPDs and broadcast television stations? What metrics should we use to compare OVD viewership, MVPD viewership, and broadcast television station viewership? In what ways have

OVDs improved the quantity and the quality of their video programming since our *13th Report*? Do OVDs provide local news or other local programming? What financial returns do OVDs earn on their investments? What data are available and what metrics should we use to analyze the extent to which OVDs' services are substitute or a complement to MVPD service?

Geographic Availability

48. *Rural Versus Urban.* As in previous reports, we expect to compare competition in the market for the delivery of video in rural markets with that in urban markets. For the purpose of measuring the availability of and competition among providers of video programming, how should we define "rural" and "urban"?

49. We seek data, information, and comment to analyze whether there are differences in the delivered video programming between rural and urban areas and the factors that affect these differences. How does competition differ between rural and urban areas? What are the demographic, geographic, and economic factors that drive differences in competition between rural and urban markets? Which, if any, delivered video programming services are most often lacking in rural areas? How does access to broadcast television stations differ between rural and urban areas? We recognize that most households have access to two DBS services—DIRECTV and DISH Network—that provide national service. How does access to other MVPD service differ between rural and urban areas? To what extent do rural areas lack access to a cable system or other wireline MVPD? How many households lack access to a cable system? What percentage of these households are in rural areas? Do rural areas have less access to high-speed Internet service and, therefore, less access to OVD services relative to urban areas?

50. We seek information, data, and comment regarding the differences in the availability and price of delivered video service in rural areas relative to urban areas. When cable service is available in rural areas, are prices higher or quality lower relative to urban markets? Are there examples of rural areas that receive delivered video programming service similar in price and quality to those found in urban areas?

51. *Alaska and Hawaii.* We seek information and comment regarding MVPD and OVD service in Alaska and Hawaii. We are interested in how the availability of MVPD and OVD services in these states differs from those that are available in the other states. Do consumers in Alaska and Hawaii have the same or similar access to MVPD, broadcast, and OVD services as consumers in the other 48 states? Are prices for subscription to MVPDs higher than those found in other states? Is the same quantity of video programming available and is it offered in programming packages similar to the services in other states? We request updated information on the delivery of video programming to consumers in Alaska and Hawaii relative to that provided in other states.

Key Industry Inputs

52. *Video Content Creators.* Because MVPDs and broadcast television stations increasingly negotiate directly with content creators for non-linear forms of content distribution, including video on demand and online video distribution, we plan to look more closely at content creators in our *14th Report.* Creators of video programming include major studios that are subsidiaries of entertainment conglomerates and independent companies. We request data, information, and comment that will help us analyze the number and size of content creators and the evolving relationship between content creators and the firms that distribute video content. Are there barriers for independent production entities to access the audiences of all delivery systems (including broadcast and online)—not just MVPDs? In addition, we are interested in information regarding entities, local and national, that create news, public interest programming and/or sports and the relationships between the content creators and those that deliver video programming.

53. We seek data, information, and comment on the business strategies of content creators regarding the selling and licensing of video content and the effect on video distribution. How have changes in the creation of content affected the distribution of video programming? Have changes in content creation increased investment in the distribution of video programming? Have changes in the business strategies of content creators regarding the type of video content created, the timing of release of specific video content through the various delivery systems (*i.e.,* the order of delivery technologies used to distribute the programming, a process also called windowing), and the prices charged for content in each window affected competition between distributors of video programming? Have there been significant changes in the bargaining power between content creators and distributors of video programming? How do the windowing strategies of video content creators affect the distribution of video programming through VOD and over the Internet? Have business strategies changed for creators of news programming, especially local news programming? Are there specific strategies that affect the delivery of sports programming that differ from those of creators of other types of video content? We seek data, information, and comment to analyze each of these issues.

54. *Video Content Aggregators.* We plan to continue to look at traditional video programming and seek data, information, and comment regarding the impact of changes in the aggregation of content on the delivery of video programming. Video content aggregators are entities that combine video content into packages of video programming for distribution. Have changes in the business models of content aggregators affected competition among distributors of video programming? Have there been significant changes in the bargaining power between content aggregators and distributors of video programming? Has entry by new video content aggregators or increased programming channels offered by existing content aggregators lead to an expanded number of channels offered by MVPDs or additional programming offered by broadcast television stations on their multiple digital streams? Have changes in the business models of content aggregators affected the growth of OVDs? Are existing video content aggregators creating additional programming networks and packages, or are new aggregators creating video programming packages? What factors do video content aggregators, including broadcast networks, cable networks, and broadcast stations, consider when deciding the terms of distributing their content?

55. *Consumer Premises Equipment.* In the *14th Report,* we plan to discuss the devices—current and forthcoming—that facilitate the delivery of video programming and examine how these inputs affect competition in the delivery of video programming. We request information on developments relating to consumer premises equipment and services that provide options to consumers for viewing video programming. Further, we seek information on the retail market for set-top boxes, including set-top boxes that do not use CableCARDs such as those sold at retail for use with DBS services. What are the challenges that manufacturers face in investing and innovating in consumer equipment? Can

consumers easily compare prices to lease smart video devices from their MVPDs and/or purchase them in retail outlets? Therefore, we request information regarding the different types of consumer premises equipment—both MVPD supplied and non-MVPD supplied—used to access video content and the capabilities thereof. We also seek information and comment on how competition among video programming distributors is affected by developments related to consumer premises equipment, such as electronic programming guides, two-way functionality, and CableCARDs that permit the reception of secured programming services without a leased set-top box, and developments in the regulatory environment for consumer premises equipment. We also request information regarding digital rights management technology and issues that affect the availability of video programming to consumers. We seek information to analyze the relationships between MVPDs that deliver video programming and manufacturers of consumer premises equipment, especially cable and DBS set-top boxes and devices that enable consumers to move video delivered over the Internet to televisions.

Consumer Behavior

56. We seek information about how trends in consumer behavior affect the products and services of providers of delivered video programming. We seek data on trends that compare consumer viewing of regularly scheduled video programming with viewing of time-shifted programming using DVRs, VOD content, and OVD content. Are consumers who are not "cutting" the MVPD cord "shaving" their subscriptions by, for example, substituting Netflix for premium channels or VOD services? Do consumers view OVD service in conjunction with over-the-air broadcast television service as a potential substitute for MVPD service?

57. We seek data, information, and comment on the development of consumer information sources for delivered video programming services and equipment. Do consumers have sufficient information to compare the prices, services, and equipment that video distributors offer? What do consumers consider most important when choosing a provider? What do consumers say are the main reasons for switching providers (*e.g.,* price, quantity, quality)?

Procedural Matters

58. Ex Parte Rules. There are no ex parte or disclosure requirements applicable to this proceeding pursuant to 47 CFR 1.204(b)(1).

59. Comment Information. Pursuant to §§ 1.415 and 1.419 of the Commission's rules, 47 CFR 1.415, 1.419, interested parties may file comments and reply comments on or before the dates indicated on the first page of this document. Comments may be filed using: (1) The Commission's Electronic Comment Filing System (ECFS), (2) the Federal Government's eRulemaking Portal, or (3) by filing paper copies. *See Electronic Filing of Documents in Rulemaking Proceedings,* 63 FR 24121 (1998).

- Electronic Filers: Comments may be filed electronically using the Internet by accessing the ECFS: *http://fjallfoss.fcc.gov/ecfs2/* or the Federal eRulemaking Portal: *http://www.regulations.gov.*
- For ECFS filers, if multiple docket or rulemaking numbers appear in the caption of this proceeding, filers must transmit one electronic copy of the comments for each docket or rulemaking number referenced in the caption. In completing the transmittal screen, filers should include their full name, U.S. Postal Service mailing address, and the applicable docket or rulemaking number. Parties may also submit an electronic comment by Internet e-mail. To get filing instructions, filers should send an e-mail to *ecfs@fcc.gov,* and include the following words in the body of the message "get form." A Sample form and directions will be sent in response.
- Paper Filers: Parties who choose to file by paper must file an original and four copies of each filing. If more than one docket or rulemaking number appears in the caption of this proceeding, filers must submit two additional copies for each additional docket or rulemaking number.

Filings can be sent by hand or messenger delivery, by commercial overnight courier, or by first-class or overnight U.S. Postal Service mail. All filings must be addressed to the Commission's Secretary, Office of the Secretary, Federal Communications Commission.

- All hand-delivered or messenger-delivered paper filings for the Commission's Secretary must be delivered to FCC Headquarters at 445 12th St., SW, Room TW–A325, Washington, DC 20554. The filing hours are 8 a.m. to 7 p.m. All hand deliveries must be held together with rubber bands or fasteners. Any envelopes must be disposed of before entering the building.
- Commercial overnight mail (other than U.S. Postal Service Express Mail and Priority Mail) must be sent to 9300 East Hampton Drive, Capitol Heights, MD 20743.
- U.S. Postal Service first-class, Express, and Priority mail must be addressed to 445 12th Street, SW., Washington DC 20554.
- People with Disabilities: Contact the FCC to request materials in accessible formats for people with disabilities (braille, large print, electronic files, audio format), send an e-mail to *fcc504@fcc.gov* or call the Consumer & Governmental Affairs Bureau at 202–418–0530 (voice), 202–418–0432 (TTY).

Federal Communications Commission.

Marlene H. Dortch,

Secretary.

[FR Doc. 2011–10782 Filed 5–3–11; 8:45 am]

BILLING CODE 6712–01–P

FEDERAL DEPOSIT INSURANCE CORPORATION

Establishment of the FDIC Systemic Resolution Advisory Committee

AGENCY: Federal Deposit Insurance Corporation.

ACTION: Notice.

SUMMARY: The Chairman of the Federal Deposit Insurance Corporation (FDIC) is establishing the FDIC Systemic Resolution Advisory Committee (the "SR Advisory Committee"). The SR Advisory Committee will provide advice and recommendations on a broad range of issues regarding the resolution of systemically important financial companies pursuant to Title II of the Dodd-Frank Wall Street Reform and Consumer Protection Act, Public Law 111–203 (July 21, 2010), 12 U.S.C. 5301 *et seq.* (the "Dodd-Frank Act"). The SR Advisory Committee is also intended to facilitate discussion on how the FDIC's systemic resolution authority, and its implementation, may impact regulated entities and other stakeholders potentially affected by the process. The SR Advisory Committee will serve solely in an advisory capacity and will have no final decision-making authority, nor will it have access to or discuss any non-public, confidential or institution-specific information. The Chairman certifies that the establishment of this advisory committee is in the public interest in connection with the performance of duties imposed on the FDIC by law.

FOR FURTHER INFORMATION CONTACT: Robert E. Feldman, Executive Secretary, FDIC, 550 17th Street, NW., Washington, DC 20429; telephone (202) 898–7043. SR Advisory Committee members will not receive any compensation for their services other than reimbursement for reasonable travel expenses incurred to attend SR Advisory Committee meetings.

SUPPLEMENTARY INFORMATION: In accordance with the requirements of the Federal Advisory Committee Act ("FACA"), 5 U.S.C. App. 2, notice is hereby given that the Chairman of the FDIC intends to establish the FDIC SR Advisory Committee. After consultation with the General Services Administration as required by section 9(a)(2) of FACA and 41 CFR 102–3.65, the Chairman of the FDIC certifies that she has determined that the establishment of the SR Advisory Committee is in the public interest in connection with the performance of duties imposed on the FDIC by law. The SR Advisory Committee will provide advice and recommendations on a broad range of issues regarding the resolution of systemically important financial companies pursuant to the Dodd-Frank Act. The SR Advisory Committee also is intended to facilitate discussion on how the systemic resolution authority, and its implementation, may impact regulated entities and other stakeholders potentially affected by the process. The SR Advisory Committee will function solely as an advisory body, and in compliance with the provisions of FACA. To ensure relevant expertise on the SR Advisory Committee, members of the SR Advisory Committee should include financial market participants and professionals with relevant experience managing large, complex firms, investors, bankruptcy professionals, representatives from the audit, accounting, credit rating, and legal professions, as well as academic and other relevant experts.

Dated at Washington, DC, this 28th day of April 2011.

Federal Deposit Insurance Corporation.

Robert E. Feldman,

Executive Secretary, Federal Deposit Insurance Corporation.

[FR Doc. 2011–10794 Filed 5–3–11; 8:45 am]

BILLING CODE P

FEDERAL MARITIME COMMISSION

Notice of Agreement Filed

The Commission hereby gives notice of the filing of the following agreement under the Shipping Act of 1984. Interested parties may submit comments on the agreement to the Secretary, Federal Maritime Commission, Washington, DC 20573, within ten days of the date this notice appears in the **Federal Register**. A copy of the agreement is available through the Commission's Web site (www.fmc.gov) or by contacting the Office of Agreements at (202) 523–5793 or *tradeanalysis@fmc.gov.*

Agreement No.: 010071–038.

Title: Cruise Lines International Association Agreement.

Parties: AMA Waterways; American Cruise Lines, Inc.; Azamara Cruises; Carnival Cruise Lines; Celebrity Cruises, Inc.; Costa Cruise Lines; Crystal Cruises; Cunard Line; Disney Cruise Line; Holland America Line; Hurtigruten, Inc.; Louis Cruises; Majestic America Line; MSC Cruises; NCL Corporation; Oceania Cruises; Orient Lines; Princess Cruises; Regent Seven Seas Cruises; Royal Caribbean International; Seabourn Cruise Line; SeaDream Yacht Club; Silversea Cruises, Ltd.; Uniworld River Cruises, Inc.; and Windstar Cruises.

Filing Party: Christine Duffy, President; Cruise Lines International Association; 910 SE. 17th Street, Suite 400; Fort Lauderdale, FL 33316.

Synopsis: The amendment adds Louis Cruises as a party to the agreement.

By Order of the Federal Maritime Commission.

Dated: April 29, 2011.

Rachel E. Dickon,

Assistant Secretary.

[FR Doc. 2011–10899 Filed 5–3–11; 8:45 am]

BILLING CODE 6730–01–P

FEDERAL TRADE COMMISSION

[File No. 111 0051]

Hikma Pharmaceuticals PLC; Analysis of Agreement Containing Consent Orders To Aid Public Comment

AGENCY: Federal Trade Commission.

ACTION: Proposed consent agreement.

SUMMARY: The consent agreement in this matter settles alleged violations of Federal law prohibiting unfair or deceptive acts or practices or unfair methods of competition. The attached Analysis to Aid Public Comment describes both the allegations in the draft complaint and the terms of the consent order—embodied in the consent agreement—that would settle these allegations.

DATES: Comments must be received on or before May 27, 2011.

ADDRESSES: Interested parties are invited to submit written comments electronically or in paper form. Comments should refer to "Hikma, File No. 111 0051" to facilitate the organization of comments. Please note that your comment—including your name and your state—will be placed on the public record of this proceeding, including on the publicly accessible FTC Web site, at *http://www.ftc.gov/os/publiccomments.shtm.*

Because comments will be made public, they should not include any sensitive personal information, such as an individual's Social Security Number; date of birth; driver's license number or other state identification number, or foreign country equivalent; passport number; financial account number; or credit or debit card number. Comments also should not include any sensitive health information, such as medical records or other individually identifiable health information. In addition, comments should not include any "[t]rade secret or any commercial or financial information which is obtained from any person and which is privileged or confidential. * * *," as provided in Section 6(f) of the FTC Act, 15 U.S.C. 46(f), and Commission Rule 4.10(a)(2), 16 CFR 4.10(a)(2). Comments containing material for which confidential treatment is requested must be filed in paper form, must be clearly labeled "Confidential," and must comply with FTC Rule 4.9(c), 16 CFR 4.9(c).[1]

Because paper mail addressed to the FTC is subject to delay due to heightened security screening, please consider submitting your comments in electronic form. Comments filed in electronic form should be submitted by using the following Web link: *https://ftcpublic.commentworks.com/ftc/hikmabaxter* and following the instructions on the Web-based form. To ensure that the Commission considers an electronic comment, you must file it on the Web-based form at the Web link: *https://ftcpublic.commentworks.com/ftc/hikmabaxter.* If this Notice appears at *http://www.regulations.gov/search/index.jsp,* you may also file an electronic comment through that Web site. The Commission will consider all comments that regulations.gov forwards to it. You may also visit the FTC Web site at *http://www.ftc.gov/* to read the

[1] The comment must be accompanied by an explicit request for confidential treatment, including the factual and legal basis for the request, and must identify the specific portions of the comment to be withheld from the public record. The request will be granted or denied by the Commission's General Counsel, consistent with applicable law and the public interest. *See* FTC Rule 4.9(c), 16 CFR 4.9(c).

Notice and the news release describing it.

A comment filed in paper form should include the "Hikma, File No. 111 0051" reference both in the text and on the envelope, and should be mailed or delivered to the following address: Federal Trade Commission, Office of the Secretary, Room H–113 (Annex D), 600 Pennsylvania Avenue, NW., Washington, DC 20580. The FTC is requesting that any comment filed in paper form be sent by courier or overnight service, if possible, because U.S. postal mail in the Washington area and at the Commission is subject to delay due to heightened security precautions.

The Federal Trade Commission Act ("FTC Act") and other laws the Commission administers permit the collection of public comments to consider and use in this proceeding as appropriate. The Commission will consider all timely and responsive public comments that it receives, whether filed in paper or electronic form. Comments received will be available to the public on the FTC Web site, to the extent practicable, at *http://www.ftc.gov/os/publiccomments.shtm.* As a matter of discretion, the Commission makes every effort to remove home contact information for individuals from the public comments it receives before placing those comments on the FTC Web site. More information, including routine uses permitted by the Privacy Act, may be found in the FTC's privacy policy, at *http://www.ftc.gov/ftc/privacy.shtm.*

FOR FURTHER INFORMATION CONTACT: Kari A. Wallace (202–326–3085), FTC, Bureau of Competition, 600 Pennsylvania Avenue, NW., Washington, DC 20580.

SUPPLEMENTARY INFORMATION: Pursuant to section 6(f) of the Federal Trade Commission Act, 38 Stat. 721, 15 U.S.C. 46(f), and § 2.34 the Commission Rules of Practice, 16 CFR 2.34, notice is hereby given that the above-captioned consent agreement containing a consent order to cease and desist, having been filed with and accepted, subject to final approval, by the Commission, has been placed on the public record for a period of thirty (30) days. The following Analysis to Aid Public Comment describes the terms of the consent agreement, and the allegations in the complaint. An electronic copy of the full text of the consent agreement package can be obtained from the FTC Home Page (for April 27, 2011), on the World Wide Web, at *http://www.ftc.gov/os/actions.shtm.* A paper copy can be obtained from the FTC Public Reference Room, Room 130–H, 600 Pennsylvania Avenue, NW., Washington, DC 20580, either in person or by calling (202) 326–2222.

Public comments are invited, and may be filed with the Commission in either paper or electronic form. All comments should be filed as prescribed in the **ADDRESSES** section above, and must be received on or before the date specified in the **DATES** section.

Analysis of Agreement Containing Consent Order to Aid Public Comment

The Federal Trade Commission ("Commission") has accepted, subject to final approval, an Agreement Containing Consent Orders ("Consent Agreement") from Hikma Pharmaceuticals PLC ("Hikma") that is designed to remedy the anticompetitive effects of Hikma's acquisition of certain assets from Baxter Healthcare Corporation, Inc. ("Baxter"). Under the terms of the proposed Consent Agreement, Hikma would be required to divest to X-Gen Pharmaceuticals, Inc. ("X-Gen") all of Hikma's rights and assets relating to its generic injectable phenytoin and generic injectable promethazine products.

The proposed Consent Agreement has been placed on the public record for thirty days for receipt of comments by interested persons. Comments received during this period will become part of the public record. After thirty days, the Commission will again review the proposed Consent Agreement and the comments received, and will decide whether it should withdraw from the proposed Consent Agreement, modify it, or make final the Decision and Order ("Order").

Pursuant to an Asset Purchase Agreement dated October 29, 2010, Hikma proposes to acquire Baxter's generic injectable pharmaceutical business in a transaction valued at approximately $111.5 million ("Proposed Acquisition"). The assets to be sold include chronic pain, anti-infective, and anti-emetic products, along with Baxter' Cherry Hill, New Jersey manufacturing facility and Memphis, Tennessee warehouse and distribution center. The Commission's Complaint alleges that the Proposed Acquisition, if consummated, would violate Section 7 of the Clayton Act, as amended, 15 U.S.C. 18, and Section 5 of the Federal Trade Commission Act, as amended, 15 U.S.C. 45, by lessening competition in the U.S. markets for generic injectable phenytoin and generic injectable promethazine. The proposed Consent Agreement will remedy the alleged violations by replacing the competition that would otherwise be eliminated by the acquisition.

The Products and Structure of the Markets

The Proposed Acquisition would reduce the number of generic suppliers in each of the relevant markets. The number of generic injectable suppliers has a direct and substantial effect on pricing.

Phenytoin is an anti-convulsant drug used to control seizures and prevent them during or after surgery. In 2009, sales of injectable phenytoin totaled $1.5 million. The branded version of injectable phenytoin is no longer sold in the United States. The market for generic injectable phenytoin is highly concentrated; currently only Hikma, Baxter, and Hospira, Inc. ("Hospira") sell the product in the United States. The acquisition of Baxter's injectable business by Hikma would therefore reduce the number of suppliers of injectable phenytoin from three to two.

Generic injectable promethazine is used to relieve or prevent some types of allergies or allergic reactions, to prevent and control motion sickness, nausea, vomiting, and dizziness, and to help people go to sleep and control their pain or anxiety before or after surgery. Sales of generic injectable promethazine totaled $17 million in 2009. The market for generic injectable promethazine is highly concentrated. Only three companies currently sell generic injectable promethazine in the United States: Hikma, Baxter, and Hospira. Hospira's competitive significance in this market is limited because it only offers a premium-priced pre-filled syringe, while Hikma and Baxter offer lower priced ampules and vials that appeal to a broader range of customers. A fourth company has approval to sell generic injectable promethazine in the United States and has historically offered the product, but it is not currently manufacturing the product and its re-entry date is currently unknown. Thus, the acquisition would result in a market with only one low-cost competitor.

Entry

Entry into the markets for the manufacture and sale of generic injectable phenytoin and generic injectable promethazine would not be timely, likely, or sufficient in magnitude, character, and scope to deter or counteract the anticompetitive effects of the acquisition. Entry would not take place in a timely manner because the combination of generic drug development times and regulatory requirements, including Food and Drug

Administration approval, takes at least two years. In addition to the regulatory hurdles facing a potential entrant, manufacturing difficulties in producing generic injectable products, combined with the small size of the markets in question, makes additional entry unlikely to occur.

Effects

The Proposed Acquisition would cause significant anticompetitive harm to consumers in the U.S. markets for the manufacture and sale of generic injectable phenytoin and generic injectable promethazine. In generic injectable pharmaceuticals markets, price generally decreases as the second, third, or fourth competitors enter. Thus, reducing the number of competitors to two and one in each market, respectively, would cause anticompetitive harm to consumers in these U.S. markets by increasing the likelihood that consumers would pay higher prices.

The Consent Agreement

The proposed Consent Agreement effectively remedies the Proposed Acquisition's anticompetitive effects in the relevant markets by requiring Hikma to divest certain rights and assets related to generic injectable phenytoin and generic injectable promethazine to a Commission-approved acquirer no later than ten days after the acquisition. The acquirer of the divested assets must receive the prior approval of the Commission. The Commission's goal in evaluating a possible purchaser of divested assets is to maintain the competitive environment that existed prior to the acquisition.

The proposed Consent Agreement remedies the competitive concerns the acquisition raises by requiring Hikma to divest its generic injectable phenytoin and generic injectable promethazine products to X-Gen, which will purchase all rights currently held by Hikma. X-Gen is a New York-based generic injectable pharmaceutical company with 40 active products and an active product development pipeline. With its experience in generic injectable markets and strong ties to manufacturing partners, X-Gen is expected to replicate the competition that would otherwise be lost with the Proposed Acquisition.

If the Commission determines that X-Gen is not an acceptable acquirer of the assets to be divested, or that the manner of the divestitures is not acceptable, the parties must unwind the sale to X-Gen and divest the phenytoin and promethazine product lines, within six months of the date the Order becomes final, to a Commission-approved acquirer. The Commission may appoint a trustee to divest the products if Hikma fails to divest the products as required.

The proposed Consent Agreement contains several provisions to help ensure that the divestitures are successful. The Order requires Hikma to take all action to maintain the economic viability, marketability, and competitiveness of the products until such time as they are transferred to a Commission-approved acquirer. In addition, the parties must supply X-Gen with phenytoin and promethazine pursuant to a supply agreement while Hikma transfers the manufacturing technology to X-Gen or a third-party manufacturer of X-Gen's choice.

The purpose of this analysis is to facilitate public comment on the proposed Consent Agreement, and it is not intended to constitute an official interpretation of the proposed Order or to modify its terms in any way.

By direction of the Commission.

Donald S. Clark,

Secretary.

[FR Doc. 2011–10783 Filed 5–3–11; 8:45 am]

BILLING CODE 6750–01–P

DEPARTMENT OF HEALTH AND HUMAN SERVICES (HHS)

Office of the Secretary

Delegation of Authority

Notice is hereby given that I have delegated to HHS' Operating and Staff Division heads and the Chair(s) of the HHS Innovation Council, or their successors, the authorities vested in the Secretary under Section 105 of the America COMPETES Reauthorization Act of 2010 (Pub. L. 111–358) (which added Section 24 of the Stevenson-Wydler Technology Innovation Act of 1980, 15 U.S.C. 3701 *et seq*), as amended, to administer and fund prize competitions aimed at stimulating innovation. This delegation excludes the authority under Section 24(k)(3) to develop guidelines for the appointment of judges, which I hereby delegate to the Chair(s), HHS Innovation Council. Additionally, I reserve the authorities under Section 24(m)(3)(B) to approve an increase in the amount of a prize after initial announcement has been made and to approve the award of more than $500,000 in cash prizes.

These authorities may be redelegated. The authorities granted herein shall be exercised in accordance with the Department's applicable policies, procedures, and guidelines. I hereby affirm and ratify any actions taken by you or your subordinates, which involve the exercise of this authority prior to the effective date of this delegation. This delegation is effective upon date of signature.

Authority: 44 U.S.C. 3101.

Dated: April 22, 2011.

Kathleen Sebelius,

Secretary.

[FR Doc. 2011–10847 Filed 5–3–11; 8:45 am]

BILLING CODE 4150–04–P

DEPARTMENT OF HEALTH AND HUMAN SERVICES

HIT Standards Committee; Schedule for the Assessment of HIT Policy Committee Recommendations

AGENCY: Office of the National Coordinator for Health Information Technology, HHS.

ACTION: Notice.

SUMMARY: Section 3003(b)(3) of the American Recovery and Reinvestment Act of 2009 mandates that the HIT Standards Committee develop a schedule for the assessment of policy recommendations developed by the HIT Policy Committee and publish it in the **Federal Register**. This notice fulfills the requirements of Section 3003(b)(3) and updates the schedule posted in the **Federal Register** on October 8, 2010. In anticipation of receiving recommendations originally developed by the HIT Policy Committee, the HIT Standards Committee has created four (4) workgroups or subcommittees to analyze the areas of clinical quality, clinical operations, implementation, and privacy and security.

HIT Standards Committee's Schedule for the Assessment of HIT Policy Committee Recommendations is as follows: The National Coordinator will establish priority areas based in part on recommendations received from the HIT Policy Committee regarding health information technology standards, implementation specifications, and/or certification criteria. Once the HIT Standards Committee is informed of those priority areas, it will:

(A) Direct the appropriate workgroup or subcommittee to develop a report for the HIT Standards Committee, to the extent possible, within 90 days, which will include, among other items, the following:

(1) An assessment of what standards, implementation specifications, and certification criteria are currently available to meet the priority area;

(2) An assessment of where gaps exist (*i.e.,* no standard is available or harmonization is required because more than one standard exists) and identify

potential organizations that have the capability to address those gaps; and

(3) A timeline, which may also account for NIST testing, where appropriate, and include dates when the HIT Standards Committee is expected to issue recommendation(s) to the National Coordinator.

(B) Upon receipt of a subcommittee report, the HIT Standards Committee will:

(1) Accept the timeline provided by the subcommittee, and, if necessary, revise it; and

(2) Assign subcommittee(s) to conduct research and solicit testimony, where appropriate, and issue recommendations to the full committee in a timely manner.

(C) Advise the National Coordinator, consistent with the accepted timeline in (B)(1) and after NIST testing, where appropriate, on standards, implementation specifications, and/or certification criteria, for the National Coordinator's review and determination whether or not to endorse the recommendations, and possible adoption of the proposed recommendations by the Secretary of the Department of Health and Human Services.

For a listing of upcoming HIT Standards Committee meetings, please visit the ONC Web site at *http://healthit.hhs.gov.*

Notice of this schedule is given under the American Recovery and Reinvestment Act of 2009 (Pub. L. 111–5), section 3003.

Dated: April 25, 2011.

Judith Sparrow,

Office of Policy and Planning, Office of the National Coordinator for Health Information Technology.

[FR Doc. 2011–10871 Filed 5–3–11; 8:45 am]

BILLING CODE 4150–45–P

DEPARTMENT OF HEALTH AND HUMAN SERVICES

Administration for Children and Families

Proposed Information Collection Activity; Comment Request

Title: Annual Report on Households Assisted by the Low Income Home Energy Assistance (LIHEAP).

OMB No. 0970–0060.

Description

This report is an annual activity required by statute (42 U.S.C. 8629) and Federal regulations (45 CFR 96.92) for the Low Income Home Energy Assistance Program (LIHEAP). Submission of the completed report is one requirement for LIHEAP grantees applying for Federal LIHEAP block grant funds.

States, the District of Columbia, and the Commonwealth of Puerto Rico are required to report statistics for the previous Federal fiscal year on:

- Assisted and applicant households, by type of LIHEAP assistance;
- Assisted and applicant households, by type of LIHEAP assistance and poverty level;
- Assisted households, regardless of the type(s) of LIHEAAP assistance;
- Assisted households, by type of LIHEAP assistance, having at least one vulnerable member broken out; by a person at least 60 years or younger, disabled person, or a child five years old or younger;
- Assisted households, by type of LIHEAP assistance, with least one member age 2 years or under;
- Assisted households, by type of LIHEAP assistance, with at least one member ages 3 years through 5 years; and
- Assisted households, regardless of the type(s) of LIHEAP assistance, having at least one member 60 years or older, disabled, or five years old or younger.

Insular areas (other than the Commonwealth of Puerto Rico) and Indian Tribal Grantees are required to submit data only on the number of households receiving heating, cooling, energy crisis, or weatherization benefits.

The information is being collected for the Department's annual LIHEAP Report to Congress. The data also provides information about the need for LIHEAP funds. Finally, the data are used in the calculation of LIHEAP performance measures under the Government Performance and Results Act of 1993. The data elements will allow the accuracy of measuring LIHEAP targeting performance and LIHEAP cost efficiency.

Respondents: State Governments, Tribal Governments, Insular Areas, the District of Columbia, and the Commonwealth of Puerto Rico.

ANNUAL BURDEN ESTIMATES

Instrument	Number of respondents	Number of responses per respondent	Average burden hours per response	Total burden hours
Assisted Household Report—Long Form	52	1	25	1,300
Assisted Household Report—Short Form	164	1	1	164
Applicant Household Report	52	1	13	676
Estimated Total Annual Burden Hours:				2,140

In compliance with the requirements of Section 3506(c)(2)(A) of the Paperwork Reduction Act of 1995, the Administration for Children and Families is soliciting public comment on the specific aspects of the information collection described above.

Copies of the proposed collection of information can be obtained and comments may be forwarded by writing to the Administration for Children and Families, Office of Administration, Office of Information Services, 370 L'Enfant Promenade, SW., Washington, DC 20447, Attn: ACF Reports Clearance Officer. E-mail address: *infocollection@acf.hhs.gov.* All requests should be identified by the title of the information collection.

The Department specifically requests comments on: (a) Whether the proposed collection of information is necessary for the proper performance of the functions of the agency, including whether the information shall have practical utility; (b) the accuracy of the agency's estimate of the burden of the proposed collection of information; (c) the quality, utility, and clarity of the information to be collected; and (d) ways to minimize the burden of the collection of information on respondents, including through the use of automated collection techniques or other forms of information technology. Consideration will be given to comments and suggestions submitted within 60 days of this publication.

Robert Sargis,

Reports Clearance Officer.

[FR Doc. 2011–10729 Filed 5–3–11; 8:45 am]

BILLING CODE 4184–01–P

DEPARTMENT OF HEALTH AND HUMAN SERVICES

Food and Drug Administration

[Docket No. FDA–2010–E–0296]

Determination of Regulatory Review Period for Purposes of Patent Extension; VOTRIENT

AGENCY: Food and Drug Administration, HHS.

ACTION: Notice.

SUMMARY: The Food and Drug Administration (FDA) has determined the regulatory review period for VOTRIENT and is publishing this notice of that determination as required by law. FDA has made the determination because of the submission of an application to the Director of Patents and Trademarks, Department of Commerce, for the extension of a patent which claims that human drug product.

ADDRESSES: Submit electronic comments to *http://www.regulations.gov.* Submit written petitions along with three copies and written comments to the Division of Dockets Management (HFA–305), Food and Drug Administration, 5630 Fishers Lane, Rm. 1061, Rockville, MD 20852.

FOR FURTHER INFORMATION CONTACT: Beverly Friedman, Office of Regulatory Policy, Food and Drug Administration, 10903 New Hampshire Ave., Bldg. 51, Rm. 6222, Silver Spring, MD 20993–0002, 301–796–3602.

SUPPLEMENTARY INFORMATION: The Drug Price Competition and Patent Term Restoration Act of 1984 (Pub. L. 98–417) and the Generic Animal Drug and Patent Term Restoration Act (Pub. L. 100–670) generally provide that a patent may be extended for a period of up to 5 years so long as the patented item (human drug product, animal drug product, medical device, food additive, or color additive) was subject to regulatory review by FDA before the item was marketed. Under these acts, a product's regulatory review period forms the basis for determining the amount of extension an applicant may receive.

A regulatory review period consists of two periods of time: A testing phase and an approval phase. For human drug products, the testing phase begins when the exemption to permit the clinical investigations of the drug becomes effective and runs until the approval phase begins. The approval phase starts with the initial submission of an application to market the human drug product and continues until FDA grants permission to market the drug product. Although only a portion of a regulatory review period may count toward the actual amount of extension that the Director of Patents and Trademarks may award (for example, half the testing phase must be subtracted as well as any time that may have occurred before the patent was issued), FDA's determination of the length of a regulatory review period for a human drug product will include all of the testing phase and approval phase as specified in 35 U.S.C. 156(g)(1)(B).

FDA recently approved for marketing the human drug product VOTRIENT (pazopanib hydrochloride). VOTRIENT is a kinase inhibitor indicated for treatment of patients with advanced renal cell carcinoma. Subsequent to this approval, the Patent and Trademark Office received a patent term restoration application for VOTRIENT (U.S. Patent No. 7,105,530) from GlaxoSmithKline, LLC., and the Patent and Trademark Office requested FDA's assistance in determining this patent's eligibility for patent term restoration. In a letter dated September 30, 2010, FDA advised the Patent and Trademark Office that this human drug product had undergone a regulatory review period and that the approval of VOTRIENT represented the first permitted commercial marketing or use of the product. Thereafter, the Patent and Trademark Office requested that FDA determine the product's regulatory review period.

FDA has determined that the applicable regulatory review period for VOTRIENT is 2,568 days. Of this time, 2,263 days occurred during the testing phase of the regulatory review period, while 305 days occurred during the approval phase. These periods of time were derived from the following dates:

1. *The date an exemption under section 505(i) of the Federal Food, Drug, and Cosmetic Act (the FD&C Act) (21 U.S.C. 355(i)) became effective:* October 10, 2002. The applicant claims October 9, 2002, as the date the investigational new drug application (IND) became effective. However, FDA records indicate that the IND effective date was October 10, 2002, which was 30 days after FDA receipt of the IND.

2. *The date the application was initially submitted with respect to the human drug product under section 505(b) of the FD&C Act:* December 19, 2008. FDA has verified the applicant's claim that the new drug application (NDA) for Votrient (NDA 22–465) was submitted on December 19, 2008.

3. *The date the application was approved:* October 19, 2009. FDA has verified the applicant's claim that NDA 22–465 was approved on October 19, 2009.

This determination of the regulatory review period establishes the maximum potential length of a patent extension. However, the U.S. Patent and Trademark Office applies several statutory limitations in its calculations of the actual period for patent extension. In its application for patent extension, this applicant seeks 719 days of patent term extension.

Anyone with knowledge that any of the dates as published are incorrect may submit to the Division of Dockets Management (see **ADDRESSES**) either electronic or written comments and ask for a redetermination by July 5, 2011. Furthermore, any interested person may petition FDA for a determination regarding whether the applicant for extension acted with due diligence during the regulatory review period by October 31, 2011. To meet its burden, the petition must contain sufficient facts to merit an FDA investigation. (See H. Rept. 857, part 1, 98th Cong., 2d sess., pp. 41–42, 1984.) Petitions should be in the format specified in 21 CFR 10.30.

Interested persons may submit to the Division of Dockets Management (see **ADDRESSES**) electronic or written comments and written petitions. It is only necessary to send one set of comments. It is no longer necessary to send three copies of mailed comments. However, if you submit a written petition, you must submit three copies of the petition. Identify comments with the docket number found in brackets in the heading of this document.

Comments and petitions that have not been made publicly available on *http://www.regulations.gov* may be viewed in the Division of Dockets Management between 9 a.m. and 4 p.m., Monday through Friday.

Dated: April 15, 2011.

Jane A. Axelrad,

Associate Director for Policy, Center for Drug Evaluation and Research.

[FR Doc. 2011–10870 Filed 5–3–11; 8:45 am]

BILLING CODE 4160–01–P

DEPARTMENT OF HEALTH AND HUMAN SERVICES

Food and Drug Administration

[Docket No. FDA–2011–N–0002]

Advisory Committee; Medical Imaging Drugs Advisory Committee; Reestablishment

AGENCY: Food and Drug Administration, HHS.

ACTION: Notice.

SUMMARY: The Food and Drug Administration (FDA) is announcing the

reestablishment of the Medical Imaging Drugs Advisory Committee in the Division of Advisory Committee and Consultants Management, Center for Drug Evaluation and Research.

FOR FURTHER INFORMATION CONTACT: Minh Doan, Center for Drug Evaluation and Research, Food and Drug Administration, 10903 New Hampshire Ave., Bldg. 31, rm. 2424, Silver Spring, MD 20993–0002, 301–796–9001, FAX: 301–847–8533, *MIDAC@fda.hhs.gov.*

SUPPLEMENTARY INFORMATION: Under the Federal Advisory Committee Act of October 6, 1972 (Pub. L. 92–463 (5 U.S.C. app. 2)); section 904 of the Federal Food, Drug, and Cosmetic Act (21 U.S.C. 394), as amended by the Food and Drug Administration Revitalization Act (Pub. L. 101–635); and 21 CFR 14.40(b), FDA is announcing the reestablishment of the Medical Imaging Drugs Advisory Committee by the Commissioner of Food and Drugs (the Commissioner). A notice announcing a request for nominations for members and representatives on the committee as well as a final rule adding the committee to the current list of committees in 21 CFR 14.100 will be published at a later date.

The Medical Imaging Drugs Advisory Committee reviews and evaluates data concerning the safety and effectiveness of marketed and investigational human drug products for use in diagnostic and therapeutic procedures using radioactive pharmaceuticals and contrast media used in diagnostic radiology and makes appropriate recommendations to the Commissioner.

The Medical Imaging Drugs Advisory Committee shall consist of a core of 12 voting members including the chair. Members and the chair are selected by the Commissioner or designee from among authorities knowledgeable in the fields of nuclear medicine, radiology, epidemiology or statistics, and related specialties. Almost all non-Federal members of this committee serve as special Government employees. The core of voting members may include one technically qualified member, selected by the Commissioner or designee, who is identified with consumer interests and is recommended by either a consortium of consumer-oriented organizations or other interested persons. In addition to the voting members, the committee may include one nonvoting member who is identified with industry interests.

This notice is given under the Federal Advisory Committee Act and 21 CFR part 14, relating to advisory committees.

Dated: April 28, 2011.

Leslie Kux,

Acting Assistant Commissioner for Policy.

[FR Doc. 2011–10813 Filed 5–3–11; 8:45 am]

BILLING CODE 4160–01–P

DEPARTMENT OF HEALTH AND HUMAN SERVICES

Food and Drug Administration

[Docket No. FDA–2011–N–0002]

2011 Parenteral Drug Association/Food and Drug Administration Glass Quality Conference; Public Conference

AGENCY: Food and Drug Administration, HHS.

ACTION: Notice of public conference.

SUMMARY: The Food and Drug Administration (FDA), in cosponsorship with the Parenteral Drug Association (PDA), is announcing a public conference entitled "PDA/FDA Glass Quality Conference—Best Practices to Prevent and/or Detect At-Risk Glass Packaging."

Date and Time: The public conference will be held on May 23, 2011, from 7 a.m. to 6:30 p.m. and May 24, 2011, from 7 a.m. to 4:30 p.m.

Location: The public conference will be held at the Key Bridge Marriott Hotel, 1401 Lee Highway, Arlington, VA 22209, 1–703–524–6400, FAX: 1–703–524–8964.

Contact Person: Wanda Neal, Parenteral Drug Association (PDA), PDA Global Headquarters, Bethesda Towers, 4350 East-West Highway, suite 200, Bethesda, MD 20814, 1–301–656–5900, extension 111, FAX: 1–301–986–1093, e-mail: *neal@pda.org.*

Accommodations: Attendees are responsible for their own accommodations. To make reservations at the Key Bridge Marriott Hotel, at the reduced conference rate, contact the Key Bridge Marriott Hotel (see *Location*), citing meeting code "PDA." Room Rates are: Single/Double: $229, plus applicable state and local. Reservations can be made on a space and rate availability basis.

Registration: You are encouraged to register at your earliest convenience. The PDA registration fees cover the cost of facilities, materials, and breaks. Seats are limited; therefore, submit your registration as soon as possible. Conference space will be filled in order of receipt of registration. Onsite registration will be available on a space available basis on the day of the public conference beginning at 7 a.m. on May 23, 2011. The cost of registration is as follows:

PDA Members	$1,895.00
PDA Non-Members.	$2,144.00
Government/Health Authority PDA Member	$700.00
Government/Health Authority PDA Non-Member	$700.00
PDA Member Academic	$700.00
PDA Non-Member Academic/ Health Authority	$780.00
PDA Member Students	$280.00
PDA Non-Member Students	$310.00

If you need special accommodations due to a disability, please attach a written description of your needs with your registration form. Specific questions can be e-mailed to *day@pda.org.*

Registration Instructions: To register, please submit your registration form online *http://www.pda.org/glassquality2011* or by mail to: PDA Global Headquarters, 4350 East West Highway, suite 150, Bethesda, MD 20814. (FDA has verified the Web site address, but is not responsible for subsequent changes to the Web site after this document publishes in the **Federal Register.**)

SUPPLEMENTARY INFORMATION: Due to recent glass packaging quality issues and recalls related to defects or incompatibilities with finished product over the shelf life, pharmaceutical manufacturers and glass suppliers have recognized the need for improvements in glass packaging and glass handling practices throughout the product life cycle. Appropriate standards, glass supplier reliability, and best practices on glass handling and distribution are all necessary elements in the maintenance of container integrity and product sterility assurance throughout the product life cycle of sterile injectable pharmaceutical and biopharmaceutical products. The 2-day public conference will cover:

- Current issues with glass packaging,
- Best practices on glass handling,
- Current expectations for incoming glass and pharmaceutical product packaging,
- How to establish an effective glass supplier relationship for product improvement, and
- Improvements in glass manufacturing, characterization, handling or packaging.

The conference program will include an exhibition on May 23 and 24, 2011.

Dated: April 28, 2011.

Leslie Kux,

Acting Assistant Commissioner for Policy.

[FR Doc. 2011–10764 Filed 5–3–11; 8:45 am]

BILLING CODE 4160–01–P

DEPARTMENT OF HEALTH AND HUMAN SERVICES

Food and Drug Administration

[Docket No. FDA–2011–N–0002]

Science Board Advisory Committee; Notice of Meeting

AGENCY: Food and Drug Administration, HHS.

ACTION: Notice.

This notice announces a forthcoming meeting of a public advisory committee of the Food and Drug Administration (FDA). The meeting will be open to the public.

Name of Committee: Science Board to the Food and Drug Administration (Science Board).

General Function of the Committee: The Science Board provides advice primarily to the Commissioner of Food and Drugs and other appropriate officials on specific complex and technical issues, as well as emerging issues within the scientific community in industry and academia. Additionally, the Science Board provides advice to the Agency on keeping pace with technical and scientific evolutions in the fields of regulatory science, on formulating an appropriate research agenda, and on upgrading its scientific and research facilities to keep pace with these changes. It will also provide the means for critical review of Agency sponsored intramural and extramural scientific research programs.

Date and Time: The meeting will be held on Friday, May 20, 2011, from 9 a.m. to 4 p.m.

Location: Food and Drug Administration, 10903 New Hampshire Ave., Bldg. 31, rm. 1503, Silver Spring, MD 20993–0002. Information regarding special accommodations due to a disability, visitor parking, and transportation may be accessed at: *http://www.fda.gov/AdvisoryCommittees/default.htm*; under the heading "Resources for You," click on "Public Meetings at the FDA White Oak Campus." Please note that visitors to the White Oak Campus must enter through Building 1. For those unable to attend in person, the meeting will also be Web cast. The link for the Web cast is available at *https://collaboration.fda.gov/scienceboard.*

Contact Person: Martha Monser, Office of the Commissioner, Food and Drug Administration, 10903 New Hampshire Ave., Bldg. 32, rm. 4286, Silver Spring, MD 20993–0002, 301–796–4627, or FDA Advisory Committee Information Line, 1–800–741–8138 (301–443–0572 in the Washington, DC area), and follow the prompts to the desired center or product area. Please call the Information Line for up-to-date information on this meeting. A notice in the **Federal Register** about last minute modifications that impact a previously announced advisory committee meeting cannot always be published quickly enough to provide timely notice. Therefore, you should always check the Agency's Web site and call the appropriate advisory committee hot line/phone line to learn about possible modifications before coming to the meeting.

Agenda: On May 20, 2011, the Science Board will discuss the report from the subcommittee's review of the Pharmacovigilance Program at the Center for Drug Evaluation and Research. The Science Board will be provided with updates on FDA's nanotechnology research program plans and on FDA's activities in support of Comparative Effectiveness Research. The Science Board will also initiate the charge to the subcommittee for a science review of the Center for Devices and Radiological Health.

FDA intends to make background material available to the public no later than 2 business days before the meeting. If FDA is unable to post the background material on its Web site prior to the meeting, the background material will be made publicly available at the location of the advisory committee meeting, and the background material will be posted on FDA's Web site after the meeting. Background material is available at *http://www.fda.gov/AdvisoryCommittees/Calendar/default.htm*. Scroll down to the appropriate advisory committee link.

Procedure: Interested persons may present data, information, or views, orally or in writing, on issues pending before the committee. Written submissions may be made to the contact person on or before May 13, 2011. Oral presentations from the public will be scheduled between approximately 1 p.m. and 2 p.m. Those individuals interested in making formal oral presentations should notify the contact person and submit a brief statement of the general nature of the evidence or arguments they wish to present, the names and addresses of proposed participants, and an indication of the approximate time requested to make their presentation on or before May 5, 2011. Time allotted for each presentation may be limited. If the number of registrants requesting to speak is greater than can be reasonably accommodated during the scheduled open public hearing session, FDA may conduct a lottery to determine the speakers for the scheduled open public hearing session. The contact person will notify interested persons regarding their request to speak by May 6, 2011.

Persons attending FDA's advisory committee meetings are advised that the Agency is not responsible for providing access to electrical outlets.

FDA welcomes the attendance of the public at its advisory committee meetings and will make every effort to accommodate persons with physical disabilities or special needs. If you require special accommodations due to a disability, please contact Martha Monser, at least 7 days in advance of the meeting.

FDA is committed to the orderly conduct of its advisory committee meetings. Please visit our Web site at *http://www.fda.gov/AdvisoryCommittees/About AdvisoryCommittees/ucm111462.htm* for procedures on public conduct during advisory committee meetings.

Notice of this meeting is given under the Federal Advisory Committee Act (5 U.S.C. app. 2).

Dated: April 28, 2011.

Leslie Kux,

Acting Assistant Commissioner for Policy.

[FR Doc. 2011–10763 Filed 5–3–11; 8:45 am]

BILLING CODE 4160–01–P

DEPARTMENT OF HEALTH AND HUMAN SERVICES

Substance Abuse and Mental Health Services Administration

Agency Information Collection Activities: Proposed Collection; Comment Request

In compliance with Section 3506(c)(2)(A) of the Paperwork Reduction Act of 1995 concerning opportunity for public comment on proposed collections of information, the Substance Abuse and Mental Health Services Administration (SAMHSA) will publish periodic summaries of proposed projects. To request more information on the proposed project or to obtain a copy of the information collection plans, call the SAMHSA Reports Clearance Officer at (240) 276–1243.

Comments are invited on (a) whether the proposed collection of information is necessary for the proper performance of the functions of the agency, including whether the information shall have practical utility; (b) the accuracy of the agency's estimate of the burden of the proposed collection of information; (c) ways to enhance the quality, utility, and clarity of the information to be

collected; and (d) ways to minimize the burden of the collection of information on respondents, including through the use of automated collection techniques or other forms of information technology.

Proposed Project: Assessment of the Underage Drinking Prevention Education Initiatives State/Territory Videos Project—New

The Substance Abuse and Mental Health Services Administration/Center for Substance Abuse Prevention (SAMHSA/CSAP) is requesting Office of Management and Budget (OMB) approval of three new data collection instruments—

- State/Territory Video Contacts Interview Form
- State/Territory Videos Project—Dissemination Update Form
- Video Viewers Feedback Form

This new information collection is for a process assessment of the Underage Drinking Prevention Education Initiatives State/Territory Videos project to be conducted from 2011 through 2014. In 2007, four States participated in a pilot study to produce videos highlighting the underage drinking (UAD) prevention efforts of the States. Based upon the success of those videos in showcasing the States' UAD prevention activities, 10 additional States and 1 Territory were provided funds to produce UAD prevention videos in 2009. SAMHSA/CSAP intends to support the production of the State/Territory UAD prevention videos annually. Therefore, from 2010 through 2013, SAMHSA/CSAP will invite approximately 45 additional States/Territories to produce their own UAD prevention video.

The information collected for the assessment will be used by SAMHSA/CSAP to (1) ascertain whether the videos produced under the State/Territory Videos project are assisting States and Territories in communicating effectively about their underage drinking prevention initiatives, goals, and objectives; (2) document the dissemination efforts of the videos; and (3) enhance the technical assistance (TA) that is provided by the video production team in producing the videos. This information collection is being implemented under authority of Section 501(d)(4) of the Public Health Service Act (42 USC 290aa).

There are three phases to the process assessment of the State/Territory Videos project—(1) State/Territory video contacts interviews, (2) dissemination updates, and (3) video viewers feedback.

Phase I—State/Territory Video Contacts Interviews—A member of the assessment team will contact the designated State/Territory point of contact once the video is finalized. The focus of the interview will be around the State's/Territory's experience in producing the UAD prevention video, the dissemination efforts of the video, and TA received. The interview will be guided by the State/Territory Video Contacts Interview Form. The State/Territory Video Contacts Interview Form includes 31 items, among which are included the following:

- Objectives of the video.
- Targeted audiences of the video.
- Dissemination efforts of the video.
- Identification of how the video increases capacity to communicate about UAD prevention activities.
- Usefulness of the preplanning materials and activities.
- Assessment of the TA received.

By 2014, the State/Territory Video Contacts Interview Form will be completed with approximately 45 State/Territory points of contact for videos produced from 2010 through 2013. It will take an average of 20 minutes (0.333 hours) to read the informed consent statement and complete the interview. This burden estimate is based on interviews that were conducted with the pilot sites in 2007. Only 1 response per respondent is required.

Phase II—Dissemination Updates—At about 6 months after the interview, the State/Territory points of contact will be sent an e-mail from the assessment team detailing the need to update the dissemination efforts of the video for the past 6 months. The e-mail will include a coded link to access the State/Territory Video Project—Dissemination Update Form. The State/Territory Video Project—Dissemination Update Form includes 16 items, among which are included the following:

- Dissemination efforts of the video in the past 6 months.
- Feedback received on the video in the past 6 months.
- Unintended positive outcomes from the video in the past 6 months.
- Assessment of TA received in the past 6 months.

At the end of the form, the contact is thanked and reminded that they will be recontacted in about 6 months to update the dissemination efforts of their State's/Territory's video. Following OMB clearance, an e-mail will be sent to the State/Territory points of contact for videos produced during 2007–2009 noting that OMB clearance has been received for the assessment and asking them to update the dissemination efforts of the video for the past 6 months. These State/Territory points of contact provided initial details of the dissemination activities of their State's/Territory's video to the video production team during the post-production phase of the video. All videos produced under the State/Territory Videos project during 2007–2013 (total of 60) will be assessed in this phase.

The State/Territory Videos Project—Dissemination Update Form will be completed by State/Territory points of contact every 6 months through 2014. A total of 226 updates are expected through 2014. It will take an average of 10 minutes (0.167 hours) to review instructions and complete the online form. The burden estimate is based on comments from several potential respondents who reviewed the form and provided comments on how long it would take them to respond to it. The annualized hour burden is expected to vary because of differences in when the videos were produced and the number of updates that are expected through 2014.

Phase III—Video Viewers Feedback—The purpose of this phase of the assessment is to obtain feedback on the videos to determine if the videos increased community awareness of the UAD prevention efforts of the States/Territories. The Video Viewers Feedback Form will be located on the "State Videos" page of *http://www.stopalcoholabuse.gov.* A link to the feedback form may also be placed on SAMHSA's YouTube channel (if additional clearance is obtained). If States/Territories conduct in-person meetings to showcase the video, they may direct persons to the "State Videos" page of *http://www.stopalcoholabuse.gov* to complete the form or a link to the form will be provided that can be placed on their agency's Web site. Viewers will be asked to complete 1 feedback form for each video viewed. The Video Viewers Feedback Form includes 16 items, among which are included the following:

- Indication of which video was viewed.
- When and how the video was viewed.
- Indication of increased awareness of the State's/Territory's UAD prevention activities.
- Perception of increased involvement.
- Demographics of the viewers.

This phase will include all videos produced since 2007 (total of 60). It is estimated that by 2014, a total of 12,224.40 viewers will complete the online form, which will take an average of 5 minutes (0.083 hours) to review the informed consent statement,

instructions, and complete the form. The average completion time is based on comments from several potential respondents who reviewed the form and provided comments on how long it would take them to respond to it. Viewers of the video are assumed to be persons in the health education field or members of the general public (25 and 75 percent, respectively). The hour burden is expected to vary because of this difference in viewers.

ESTIMATED BURDEN TABLE BY PHASE—ALL FOUR YEARS (2011–2014)

Phases	Number of respondents (production year of video)	Responses per respondent	Total responses	Hours per response	Total hour burden
Phase I—State/Territory Contacts Interviews	45	1	45	0.333	14.99
	4 (2007)	6	24	0.167	4.01
	11 (2009)	6	66	0.167	11.02
Phase II—Dissemination Updates	8 (2010)	6	48	0.167	8.02
	13 (2011)	4	52	0.167	8.68
	12 (2012)	2	24	0.167	4.01
	12 (2013)	1	12	0.167	2.00
Phase III—Video Viewers Feedback	3,056.10	1	3,056.10	0.083	253.66
	9,168.30	1	9,168.30	0.083	760.97
Total—all Phases	12,329.40		12,495.40		1,067.36

ESTIMATED AVERAGED* ANNUALIZED BURDEN TABLE

Form name	Number of respondents	Responses per respondent	Total responses	Hours per response	Total hour burden
State/Territory Video Contacts Interview Form	15	1	15	0.333	5.00
State/Territory Videos Project—Dissemination Update Form	15	6.25	56.50	0.167	9.44
Video Viewers Feedback Form	764.03	1	764.03	0.083	63.42
	2,292.08	1	2,292.08	0.083	190.24
Total	3,086.11		3,127.61		268.10

* The numbers reflected in this table are averaged across all 4 years of the assessment, except for the State/Territory Video Contacts Interview Form which is averaged across 3 years. The hours per response rates are actual not average figures. Figures in this table may be off slightly from figures in the Estimated Burden Table by Phase—All Four Years (2011–2014) due to rounding.

Send comments to Summer King, SAMHSA Reports Clearance Officer, Room 8–1099, One Choke Cherry Road, Rockville, MD 20857 and e-mail a copy to *summer.king@samhsa.hhs.gov.* Written comments should be received within 60 days of this notice.

Dated: April 27, 2011.

Elaine Parry,

Director, Office of Management, Technology, and Operations.

[FR Doc. 2011–10851 Filed 5–3–11; 8:45 am]

BILLING CODE 4126–20–P

DEPARTMENT OF HOMELAND SECURITY

Office of the Secretary

[Docket No. DHS–2011–0022]

DHS Data Privacy and Integrity Advisory Committee

AGENCY: Privacy Office, DHS.

ACTION: Committee Management; Notice of Federal Advisory Committee Meeting

SUMMARY: The DHS Data Privacy and Integrity Advisory Committee will meet by teleconference on May 19, 2011. The meeting will be open to the public.

DATES: The DHS Data Privacy and Integrity Advisory Committee will meet on Thursday, May 19, 2011, from 11 a.m. to 1 p.m. Eastern Daylight Time. Please note that the meeting may end early if the Committee has completed its business.

ADDRESSES: Members of the public may attend the meeting by calling 1–800–320–4330 and entering the PIN 673978. The number of teleconference lines is limited, however, and lines will be available on a first-come, first-served basis.

For information on services for individuals with disabilities, or to request special assistance during the meeting, contact Martha K. Landesberg, Executive Director, DHS Data Privacy and Integrity Advisory Committee, as soon as possible.

To facilitate public participation, we invite public comment on the issues to be considered by the Committee as listed in the "Supplementary Information" section below. A public comment period will be held during the meeting from 12:30 p.m. to 1 p.m., and speakers are requested to limit their comments to 3 minutes. If you would like to address the Committee at the meeting, we request that you register in advance by contacting Martha K. Landesberg at the address provided below or notify the Chairman of your interest during the teleconference. The names and affiliations, if any, of individuals who address the Committee are included in the public record of the meeting. Please note that the public comment period may end before the time indicated, following the last call for comments. Written comments and requests to have a copy of your materials distributed to each member of the Committee prior to the meeting should be sent to Martha K. Landesberg, Executive Director, DHS Data Privacy and Integrity Advisory Committee, by May 13, 2011. Persons who wish to submit comments and who are not able to attend or speak at the meeting may submit comments at any time. All submissions must include the Docket

Number (DHS–2011–0022) and may be submitted by any *one* of the following methods:

- *Federal eRulemaking Portal: http://www.regulations.gov.* Follow the instructions for submitting comments.
- *E-mail: PrivacyCommittee@dhs.gov.* Include the Docket Number (DHS–2011–0022) in the subject line of the message.
- *Fax:* (703) 483–2999
- *Mail:* Martha K. Landesberg, Executive Director, Data Privacy and Integrity Advisory Committee, Department of Homeland Security, Washington, DC 20528.

Instructions: All submissions must include the words "Department of Homeland Security Data Privacy and Integrity Advisory Committee" and the Docket Number (DHS–2011–0022). Comments received will be posted without alteration at *http://www.regulations.gov*, including any personal information provided.

If you wish to attend the teleconference, please plan to dial in promptly at 11 a.m. The DHS Privacy Office encourages you to register for the meeting in advance by contacting Martha K. Landesberg, Executive Director, DHS Data Privacy and Integrity Advisory Committee, at *PrivacyCommittee@dhs.gov.* Advance registration is voluntary. The Privacy Act Statement below explains how DHS uses the registration information you may provide and how you may access or correct information retained by DHS, if any.

Docket: For access to the docket to read background documents or comments received by the DHS Data Privacy and Integrity Advisory Committee, go to *http://www.regulations.gov.*

FOR FURTHER INFORMATION CONTACT: Martha K. Landesberg, Executive Director, DHS Data Privacy and Integrity Advisory Committee, Department of Homeland Security, Washington, DC 20528, by telephone (703) 235–0780, by fax (703) 235–0442, or by e-mail to *PrivacyCommittee@dhs.gov.*

SUPPLEMENTARY INFORMATION: Notice of this meeting is given under the Federal Advisory Committee Act (FACA), 5 U.S.C. App. 2. The DHS Data Privacy and Integrity Advisory Committee provides advice at the request of the Secretary of Homeland Security and the DHS Chief Privacy Officer on programmatic, policy, operational, administrative, and technological issues within the DHS that relate to personally identifiable information, as well as data integrity and other privacy-related matters. The committee was established by the Secretary of Homeland Security under the authority of 6 U.S.C. 451.

Agenda

During the meeting, the Chief Privacy Officer will provide the Committee an update on the activities of the DHS Privacy Office. In support of the Committee's ongoing advice to the Department on implementing privacy protections in DHS operations, the Committee will also hear and discuss a presentation on the DHS Science and Technology Directorate's implementation of Department Privacy Policy. Please note that the teleconference may end early if all business is completed. The agenda will be posted in advance of the meeting on the Committee's Web site at *http://www.dhs.gov/privacy.* Please note that the meeting may end early if all business is completed.

Privacy Act Statement: DHS's Use of Your Information

Authority: DHS requests that you voluntarily submit this information under its following authorities: The Federal Records Act, 44 U.S.C. 3101; the FACA, 5 U.S.C. App. 2; and the Privacy Act of 1974, 5 U.S.C. 552a.

Principal Purposes: When you register to attend a DHS Data Privacy and Integrity Advisory Committee meeting, DHS collects your name, contact information, and the organization you represent, if any. We use this information to contact you for purposes related to the meeting, such as to confirm your registration, to advise you of any changes in the meeting, or to assure that we have sufficient materials to distribute to all attendees. We may also use the information you provide for public record purposes such as posting publicly available transcripts and meeting minutes.

Routine Uses and Sharing: In general, DHS will not use the information you provide for any purpose other than the Principal Purposes, and will not share this information within or outside the agency. In certain circumstances, DHS may share this information on a case-by-case basis as required by law or as necessary for a specific purpose, as described in the DHS/ALL–002 Mailing and Other Lists System of Records Notice (November 25, 2008, 73 FR 71659).

Effects of Not Providing Information: You may choose not to provide the requested information or to provide only some of the information DHS requests. If you choose not to provide some or all of the requested information, DHS may not be able to contact you for purposes related to the meeting.

Accessing and Correcting Information: If you are unable to access or correct this information by using the method that you originally used to submit it, you may direct your request in writing to the DHS Deputy Chief FOIA Officer at *foia@dhs.gov.* Additional instructions are available at *http://www.dhs.gov/foia* and in the DHS/ALL–002 Mailing and Other Lists System of Records referenced above.

Dated: April 28, 2011.

Mary Ellen Callahan,

Chief Privacy Officer, Department of Homeland Security.

[FR Doc. 2011–10721 Filed 5–3–11; 8:45 am]

BILLING CODE 9110–9L–P

DEPARTMENT OF HOMELAND SECURITY

Coast Guard

[USCG–2011–0157]

Cooperative Research and Development Agreement: Butanol Fuel Blend Usage With Marine Outboard Engines

AGENCY: Coast Guard, DHS.

ACTION: Notice of intent; request for public comments.

SUMMARY: The Coast Guard is announcing its intent to enter into a Cooperative Research and Development Agreement (CRADA) to identify and investigate the use of butanol fuel blends within marine outboard engines, with the overarching goal of reducing the engines' Greenhouse Gas (GHG) emissions. While the Coast Guard is currently considering partnering with Honda R&D Americas, Inc, we are soliciting public comment on the nature of and participation of other parties in the proposed CRADA. In addition, the Coast Guard also invites other potential participants to submit proposals for consideration in similar CRADAs.

DATES: Comments and related material on the proposed CRADA must reach the Docket Management Facility on or before June 3, 2011. Synopses of proposals regarding future, similar CRADAs must reach the Docket Management Facility on or before October 31, 2011.

ADDRESSES: You may submit comments identified by docket number USCG–2011–0157 using any one of the following methods:

(1) *Federal eRulemaking Portal: http://www.regulations.gov.*

(2) *Fax:* 202–493–2251.

(3) *Mail:* Docket Management Facility (M–30), U.S. Department of

Transportation, West Building Ground Floor, Room W12–140, 1200 New Jersey Avenue, SE., Washington, DC 20590–0001.

(4) *Hand delivery:* Same as mail address above, between 9 a.m. and 5 p.m., Monday through Friday, except Federal holidays. The telephone number is 202–366–9329.

To avoid duplication, please use only one of these four methods. *See* the "Public Participation and Request for Comments" portion of the **SUPPLEMENTARY INFORMATION** section below for instructions on submitting comments.

Do not submit detailed proposals for future CRADAs to the Docket Management Facility. Potential, non-Federal CRADA participants should submit these documents to James W. Gynther, U.S. Coast Guard Research and Development Center, 1 Chelsea Street, New London, CT 06320 (*e-mail: James.W.Gynther@uscg.mil*).

FOR FURTHER INFORMATION CONTACT: If you have questions on this notice, contact James W. Gynther, U.S. Coast Guard Research and Development Center, 1 Chelsea Street, New London, CT 06320, telephone 860–271–2858, e-mail: *James.W.Gynther@uscg.mil.* If you have questions on viewing or submitting material to the docket, call Renee V. Wright, Program Manager, Docket Operations, telephone 202–366–9826.

SUPPLEMENTARY INFORMATION:

Public Participation and Request for Comments

We encourage you to participate in this rulemaking by submitting comments and related materials. All comments received will be posted without change to *http://www.regulations.gov* and will include any personal information you have provided.

Submitting Comments

If you submit a comment, please include the docket number for this rulemaking (USCG–2011–0157), indicate the specific section of this document to which each comment applies, and provide a reason for each suggestion or recommendation. You may submit your comments and material online (via *http://www.regulations.gov*) or by fax, mail, or hand delivery, but please use only one of these means. If you submit a comment online via *http://www.regulations.gov,* it will be considered received by the Coast Guard when you successfully transmit the comment. If you fax, hand deliver, or mail your comment, it will be considered as having been received by the Coast Guard when it is received at the Docket Management Facility. We recommend that you include your name and a mailing address, an e-mail address, or a telephone number in the body of your document so that we can contact you if we have questions regarding your submission.

To submit your comment online, go to *http://www.regulations.gov* and type "USCG–2011–0157" in the "Keyword" box. If you submit your comments by mail or hand delivery, submit them in an unbound format, no larger than 8½ by 11 inches, suitable for copying and electronic filing. If you submit comments by mail and would like to know that they reached the Facility, please enclose a stamped, self-addressed postcard or envelope. We will consider all comments and material received during the comment period and may change the rule based on your comments.

Viewing Comments and Documents

To view comments, as well as documents mentioned in this preamble as being available in the docket, go to *http://www.regulations.gov,* click on the "read comments" box, which will then become highlighted in blue. In the "Keyword" box insert "USCG–2011–0157" and click "Search." Click the "Open Docket Folder" in the "Actions" column. You may also visit the Docket Management Facility in Room W12–140 on the ground floor of the Department of Transportation West Building, 1200 New Jersey Avenue, SE., Washington, DC 20590, between 9 a.m. and 5 p.m., Monday through Friday, except Federal holidays. We have an agreement with the Department of Transportation to use the Docket Management Facility.

Privacy Act

Anyone can search the electronic form of comments received into any of our dockets by the name of the individual submitting the comment (or signing the comment, if submitted on behalf of an association, business, labor union, *etc.*). You may review a Privacy Act notice regarding our public dockets in the January 17, 2008, issue of the **Federal Register** (73 FR 3316).

Cooperative Research and Development Agreements

Cooperative Research and Development Agreements (CRADAs), are authorized by the Federal Technology Transfer Act of 1986 (Pub. L. 99–502, codified at 15 U.S.C. 3710(a)). A CRADA promotes the transfer of technology to the private sector for commercial use as well as specified research or development efforts that are consistent with the mission of the Federal parties to the CRADA. The Federal party or parties agree with one or more non-Federal parties to share research resources, but the Federal party does not contribute funding. The Department of Homeland Security (DHS), as an executive agency under 5 U.S.C. 105, is a Federal agency for purposes of 15 U.S.C. 3710(a) and may enter into a CRADA. DHS delegated its authority to the Commandant of the Coast Guard (*see* DHS Delegation No. 0160.1, para. 2.B(34)) and the Commandant has delegated his authority to the Coast Guard's Research and Development Center (R&DC).

CRADAs are not procurement contracts. Care is taken to ensure that CRADAs are not used to circumvent the contracting process. CRADAs have a specific purpose and should not be confused with other types of agreements such as procurement contracts, grants, and cooperative agreements.

Goal of Proposed CRADA

Under the proposed CRADA, the Coast Guard's R&DC would collaborate with non-Federal participants. Together, the R&DC and the non-Federal participants would identify and investigate the advantages, disadvantages, required technology enhancements, performance, costs, and other issues associated with using butanol fuel blends with marine outboard engines, with the overarching goal of reducing their Greenhouse Gas (GHG) emissions (*i.e.* lower carbon footprints).

The R&DC, with the non-Federal participants, will create and employ a structured and collaborative test protocol to better understand the potential of butanol fuel blends within marine outboard engines. The non-Federal participants will investigate the use of at least one mutually agreed upon butanol fuel blend in representative outboard engines, via a sequential process that involves first fuel-materials compatibility analysis, then bench-testing, followed by controlled field tests, and finally longer-duration operational testing on actual Coast Guard vessels.

Party Contributions

We anticipate that the Coast Guard's contributions under the proposed CRADA will include the following:

(1) Obtain, transport, and provide temporary storage for the mutually-selected butanol fuel blend required for the work to be accomplished under the CRADA;

(2) Lead the development of the test objectives and test plan for the specific work to be accomplished under the CRADA;

(3) Provide all required resources, and conduct the "field testing" analysis of the mutually-agreeable representative outboard engines using the specified butanol fuel blend, in accordance with CRADA test plan;

(4) Provide all required resources, and conduct the "operational testing" analysis of the mutually-agreeable representative outboard engines using the specified butanol fuel blend, in accordance with the CRADA test plan; and

(5) Develop the CRADA Final Report, which documents the methodologies, findings, conclusions, and recommendations of this CRADA work.

We anticipate that the non-Federal participants' contributions under the proposed CRADA will include the following:

(1) Provide input into the Coast Guard selection of the butanol fuel blend to be used during this CRADA investigation;

(2) Provide input into the Coast Guard-developed, CRADA test objectives and CRADA test plan;

(3) Provide all required resources, and conduct the "materials-compatibility testing" analysis of the mutually-agreeable representative outboard engines using the specified butanol fuel blend, in accordance with the CRADA test plan;

(4) Provide all required resources, and conduct the "bench-testing" analysis of the mutually-agreeable representative outboard engines using the specified butanol fuel blend, in accordance with the CRADA test plan;

(5) Provide outboard engine operation and performance monitoring support to the Coast Guard during the "field testing" analysis;

(6)Provide butanol fuel-specific training, along with mutually agreed upon technical support, to those Coast Guard personnel who will be maintaining the CRADA outboard engines during the operational testing, which is anticipated to be one year in duration; and

(7) Provide input into the Coast Guard-developed, CRADA Final Report.

Selection Criteria

The Coast Guard reserves the right to select for CRADA participants all, some, or none of the proposals in response to this notice. The Coast Guard will provide no funding for reimbursement of proposal development costs. Proposals (or any other material) submitted in response to this notice will not be returned. Proposals submitted are expected to be unclassified and have no more than four single-sided pages (excluding cover page and resumes). The Coast Guard will select proposals at its sole discretion on the basis of:

(1) How well they communicate an understanding of, and ability to meet, the proposed CRADA's goal; and

(2) How well they address the following criteria:

(a) Technical capability to support the non-Federal party contributions described; and

(b) Resources available for supporting the non-Federal party contributions described.

Currently, the Coast Guard is considering Honda R&D Americas, Inc., for participation in this CRADA. This is based on the fact that many Coast Guard vessels presently have Honda outboard engines, which are the subject of this alternative fuel investigation. However, we do not wish to exclude other outboard engine manufacturers or other viable participants from this or future similar CRADAs.

This is a technology transfer/development effort. Presently, the Coast Guard has no plan to procure outboard engines, which operate on butanol fuel blends. Since the goal of this CRADA is to identify and investigate the advantages, disadvantageous, required technology enhancements, performance, costs, and other issues associated with using butanol fuel blends within marine outboard engines, with the overarching goal of reducing their Greenhouse Gas (GHG) emissions (*i.e.* lower carbon footprints), and not to set future CG acquisition requirements for same, non-Federal CRADA partners will not be excluded from any future Coast Guard procurements based solely on their participation within this CRADA.

Special consideration will be given to small business firms/consortia, and preference will be given to business units located in the U.S.

Authority

This notice is issued under the authority of 15 U.S.C. 3710(a) and 5 U.S.C. 552(a).

Dated: April 19, 2011.

Matthew J. Sisson,

Commanding Officer, Research and Development Center.

[FR Doc. 2011–10801 Filed 5–3–11; 8:45 am]

BILLING CODE 9110–04–P

DEPARTMENT OF HOMELAND SECURITY

U.S. Citizenship and Immigration Services

Agency Information Collection Activities: Form I–864, Form I–864A, Form I–864EZ, and From I–864W; Extension of an Existing Information Collection; Comment Request.

ACTION: 60-Day Notice of Information Collection Under Review; Form I–864, Affidavit of Support Under Section 213A of the Act; Form I–864A, Contract Between Sponsor and Household Member, Form I–864 EZ, Affidavit of Support Under Section 213A of the Act; Form I–864W, Intending Immigrant's Affidavit of Support Exemption; OMB Control No. 1615–0075.

The Department of Homeland Security, U.S. Citizenship and Immigration Services (USCIS) will be submitting the following information collection request for review and clearance in accordance with the Paperwork Reduction Act of 1995. The information collection is published to obtain comments from the public and affected agencies. Comments are encouraged and will be accepted for sixty days until July 5, 2011.

During this 60 day period, USCIS will be evaluating whether to revise Form I–864, Form I–864A, Form I–864EZ, and Form I–864W. Should USCIS decide to revise Form I–864, Form I–864A, Form I–864EZ, and Form I–864W we will advise the public when we publish the 30-day notice in the **Federal Register** in accordance with the Paperwork Reduction Act. The public will then have 30 days to comment on any revisions to the Form I–864, Form I–864A, Form I–864EZ, and Form I–864W.

Written comments and/or suggestions regarding the item(s) contained in this notice, especially regarding the estimated public burden and associated response time, should be directed to the Department of Homeland Security (DHS), USCIS, Chief, Regulatory Products Division, Office of the Executive Secretariat, 20 Massachusetts Avenue, NW., Washington, DC 20529–2020. Comments may also be submitted to DHS via facsimile to 202–272–0997 or via e-mail at *rfs.regs@dhs.gov.* When submitting comments by e-mail, please make sure to add OMB Control No. 1615–0075 in the subject box.

Note: The address listed in this notice should only be used to submit comments concerning the extension of the Form I–864, Form I–864A, Form I–864EZ, and Form I–864W. Please do not submit requests for individual case status inquiries to this

address. If you are seeking information about the status of your individual case, please check "My Case Status" online at *https://egov.uscis.gov/cris/Dashboard.do,* or call the USCIS National Customer Service Center at 1–800–375–5283 (TTY 1–800–767–1833).

Written comments and suggestions from the public and affected agencies concerning the collection of information should address one or more of the following four points:

(1) Evaluate whether the proposed collection of information is necessary for the proper performance of the functions of the agency, including whether the information will have practical utility;

(2) Evaluate the accuracy of the agencies estimate of the burden of the proposed collection of information, including the validity of the methodology and assumptions used;

(3) Enhance the quality, utility, and clarity of the information to be collected; and

(4) Minimize the burden of the collection of information on those who are to respond, including through the use of appropriate automated, electronic, mechanical, or other technological collection techniques or other forms of information technology, e.g., permitting electronic submission of responses.

Overview of this Information Collection

(1) *Type of Information Collection:* Extension of an existing information collection.

(2) *Title of the Form/Collection:* Affidavit of Support Under Section 213A of the Act.

(3) *Agency form number, if any, and the applicable component of the Department of Homeland Security sponsoring the collection:* Form I–864, Form I–864A, Form I–864EZ, and Form I–864W; U.S. Citizenship and Immigration Services (USCIS); U.S. Citizenship and Immigration Services (USCIS).

(4) *Affected public who will be asked or required to respond, as well as a brief abstract: Primary:* Individuals or households. These forms are used by family-based and certain employment-based immigrants to have the petitioning relative execute an Affidavit of Support on their behalf.

(5) *An estimate of the total number of respondents and the amount of time estimated for an average respondent to respond:* Form I–864, 439,500 responses at 6 hours per response; Form I–864A, 215,800 responses at 1.75 hours per response; Form I–864EZ, 100,000 responses at 2.5 hours per response; Form I–864W, 1,000 responses at 1 hour per response.

(6) *An estimate of the total public burden (in hours) associated with the collection:* 3,265,650 annual burden hours.

If you need a copy of the information collection instrument, please visit the Web site at: *http://www.regulations.gov/*.

We may also be contacted at: USCIS, Regulatory Products Division, Office of the Executive Secretariat, 20 Massachusetts Avenue, NW., Washington, DC 20529–2020, Telephone number 202–272–8377.

Dated: April 29, 2011.

Evadne Hagigal,

Senior Management and Program Analyst, Regulatory Products Division, Office of the Executive Secretariat, U.S. Citizenship and Immigration Services, Department of Homeland Security.

[FR Doc. 2011–10904 Filed 5–3–11; 8:45 am]

BILLING CODE 9111–97–P

DEPARTMENT OF HOUSING AND URBAN DEVELOPMENT

[Docket No. FR–5480–N–41]

Notice of Submission of Proposed Information Collection to OMB; County Data Record Project

AGENCY: Office of the Chief Information Officer, HUD.

ACTION: Notice.

SUMMARY: The proposed information collection requirement described below has been submitted to the Office of Management and Budget (OMB) for review, as required by the Paperwork Reduction Act. The Department is soliciting public comments on the subject proposal.

The County Data Record Project will acquire, assemble, standardize and summarize Parcel data from 127 countries and 27 corresponding states that have received HUD funding. Parcel data is geographically referenced information about the ownership, rights and interests of land parcels and HUD is specifically interested in parcel data related to tax assessment, property sale, easement, lien, land use and condition.

DATES: *Comments Due Date:* June 3, 2011.

ADDRESSES: Interested persons are invited to submit comments regarding this proposal. Comments should refer to the proposal by name and/or OMB approval Number (2528–Pending) and should be sent to: HUD Desk Officer, Office of Management and Budget, New Executive Office Building, Washington, DC 20503; e-mail *OIRA–Submission@omb.eop.gov* fax: 202–395–5806.

FOR FURTHER INFORMATION CONTACT: Colette Pollard, Reports Management Officer, QDAM, Department of Housing and Urban Development, 451 Seventh Street, SW., Washington, DC 20410; e-mail Colette Pollard at *Colette.Pollard@hud.gov;* or telephone (202) 402–3400. This is not a toll-free number. Copies of available documents submitted to OMB may be obtained from Ms. Pollard.

SUPPLEMENTARY INFORMATION: This notice informs the public that the Department of Housing and Urban Development has submitted to OMB a request for approval of the Information collection described below. This notice is soliciting comments from members of the public and affecting agencies concerning the proposed collection of information to: (1) Evaluate whether the proposed collection of information is necessary for the proper performance of the functions of the agency, including whether the information will have practical utility; (2) Evaluate the accuracy of the agency's estimate of the burden of the proposed collection of information; (3) Enhance the quality, utility, and clarity of the information to be collected; and (4) Minimize the burden of the collection of information on those who are to respond; including through the use of appropriate automated collection techniques or other forms of information technology, *e.g.,* permitting electronic submission of responses.

This Notice Also Lists the Following Information

Title of Proposal: County Data Record Project.

OMB Approval Number: 2528–Pending.

Form Numbers: None.

Description of the Need for the Information and its Proposed Use

The County Data Record Project will acquire, assemble, standardize and summarize parcel data from 127 countries and 27 corresponding states that have received HUD funding. Parcel data is geographically referenced information about the ownership, rights and interests of land parcels and HUD is specifically interested in parcel data related to tax assessment, property sale, easement, lien, land use and condition.

Frequency of Submission: On occasion.

	Number of respondents	Annual responses	×	Hours per response	=	Burden hours
Reporting Burden	154	3.650		0.200		112

Total Estimated Burden Hours: 112.

Status: New Collection.

Authority: Section 3507 of the Paperwork Reduction Act of 1995, 44 U.S.C. 35, as amended.

Dated: April 27, 2011.

Colette Pollard,

Departmental Reports Management Officer, Office of the Chief Information Officer.

[FR Doc. 2011–10791 Filed 5–3–11; 8:45 am]

BILLING CODE 4210–67–P

DEPARTMENT OF HOUSING AND URBAN DEVELOPMENT

[Docket No. FR–5480–N–42]

Notice of Submission of Proposed Information Collection to OMB Housing Opportunities for Persons With AIDS (HOPWA) Program: Competitive Grant Application; Annual Progress Report (APR) for (Competitive Grantees); Consolidated Annual Performance

AGENCY: Office of the Chief Information Officer, HUD.

ACTION: Notice.

SUMMARY: The proposed information collection requirement described below has been submitted to the Office of Management and Budget (OMB) for review, as required by the Paperwork Reduction Act. The Department is soliciting public comments on the subject proposal.

The competitive application Project Budget Summary is used by HOPWA competitive grants applicants to identify funding requests by eligible activity and to show how these resources will be used over the three grant period—this form also includes the accompanying program certifications. HOPWA formula and competitive grantees are required to submit annual performance reports that enables an assessment of grantee progress towards implementing the HOPWA housing stability annual performance outcome measure while measuring project success against planned and actual accomplishments.

DATES: *Comments Due Date:* June 3, 2011.

ADDRESSES: Interested persons are invited to submit comments regarding this proposal.

Comments should refer to the proposal by name and/or OMB approval Number (2506–0133) and should be sent to: HUD Desk Officer, Office of Management and Budget, New Executive Office Building, Washington, DC 20503; e-mail *OIRA-Submission@omb.eop.gov;* fax: 202–395–5806.

FOR FURTHER INFORMATION CONTACT: Colette Pollard, Reports Management Officer, QDAM, Department of Housing and Urban Development, 451 Seventh Street, SW., Washington, DC 20410; e-mail Colette Pollard at *Colette.Pollard@hud.gov;* or telephone (202) 402–3400. This is not a toll-free number. Copies of available documents submitted to OMB may be obtained from Ms. Pollard.

SUPPLEMENTARY INFORMATION: This notice informs the public that the Department of Housing and Urban Development has submitted to OMB a request for approval of the Information collection described below. This notice is soliciting comments from members of the public and affecting agencies concerning the proposed collection of information to: (1) Evaluate whether the proposed collection of information is necessary for the proper performance of the functions of the agency, including whether the information will have practical utility; (2) Evaluate the accuracy of the agency's estimate of the burden of the proposed collection of information; (3) Enhance the quality, utility, and clarity of the information to be collected; and (4) Minimize the burden of the collection of information on those who are to respond; including through the use of appropriate automated collection techniques or other forms of information technology, e.g., permitting electronic submission of responses.

This notice also lists the following information:

Title of Proposal: Housing Opportunities for Persons with AIDS (HOPWA) Program: Competitive Grant Application; Annual Progress Report (APR) for (Competitive Grantees).

Consolidated Annual Performance

OMB Approval Number: 2506–0133.

Form Numbers: None.

Description of The Need For The Information and its Proposed Use:

The competitive application Project Budget Summary is used by HOPWA competitive grants applicants to identify funding requests by eligible activity and to show how these resources will be used over the three grant period—this form also includes the accompanying program certifications. HOPWA formula and competitive grantees are required to submit annual performance reports that enables an assessment of grantee progress towards implementing the HOPWA housing stability annual performance outcome measure while measuring project success against planned and actual accomplishments.

Frequency of Submission: Annually.

	Number of respondents	Annual responses	×	Hours per response	=	Burden hours
Reporting Burden	255	1		41.803		10,660

Total Estimated Burden Hours: 10,660.

Status: Revision of currently approved collection.

Authority: Section 3507 of the Paperwork Reduction Act of 1995, 44 U.S.C. 35, as amended.

Dated: April 27, 2011.

Colette Pollard,

Departmental Reports Management Officer, Office of the Chief Information Officer.

[FR Doc. 2011–10793 Filed 5–3–11; 8:45 am]

BILLING CODE 4210–67–P

DEPARTMENT OF THE INTERIOR

Bureau of Land Management

[LLWY–957400–11–L14200000–BJ0000–TRST]

Filing of Plats of Survey, Nebraska

AGENCY: Bureau of Land Management, Interior.

ACTION: Notice.

SUMMARY: The Bureau of Land Management (BLM) is scheduled to file the plats of survey of the lands described below thirty (30) calendar days from the date of this publication in the BLM Wyoming State Office, Cheyenne, Wyoming.

FOR FURTHER INFORMATION CONTACT: Bureau of Land Management, 5353 Yellowstone Road, P.O. Box 1828, Cheyenne, Wyoming 82003.

SUPPLEMENTARY INFORMATION: These surveys were executed at the request of the Bureau of Indian Affairs and are necessary for the management of these lands. *The lands surveyed are:*

The plat and field notes representing the dependent resurvey of portions of the Winnebago Indian Reservation Boundary, the south and east boundaries, the subdivisional lines and the subdivision of sections 35 and 36, and the survey of the subdivision of sections 35 and 36, Township 27 North, Range 5 East, Sixth Principal Meridian, Nebraska, Group No. 169, was accepted April 26, 2011.

The plat and field notes representing the dependent resurvey of portions of the Winnebago Indian Reservation Boundary, the south and east boundaries and the subdivision of sections 35 and 36, and the survey of the subdivision of sections 35 and 36, Township 27 North, Range 6 East, Sixth Principal Meridian, Nebraska, Group No. 170, was accepted April 26, 2011.

The plat representing the entire record of the perpetuation of certain corners and reference monuments between sections 31 and 32, Township 27 North, Range 6 East, Sixth Principal Meridian, Nebraska, Group No. 170, was accepted April 26, 2011.

The plat and field notes representing the dependent resurvey of portions of the Winnebago Indian Reservation Boundary, the subdivisional lines and the subdivision of certain sections, and the survey of the subdivision of certain sections, Township 27 North, Range 7 East, Sixth Principal Meridian, Nebraska, Group No. 171, was accepted April 26, 2011.

The plat and field notes representing the dependent resurvey of portions of the Winnebago Indian Reservation Boundary, the subdivisional lines and the subdivision of certain sections, and the survey of the subdivision of certain sections, Township 27 North, Range 8 East, Sixth Principal Meridian, Nebraska, Group No. 172, was accepted April 26, 2011.

Copies of the preceding described plats and field notes are available to the public at a cost of $1.10 per page.

Dated: April 28, 2011.

John P. Lee,

Chief Cadastral Surveyor, Division of Support Services.

[FR Doc. 2011–10820 Filed 5–3–11; 8:45 am]

BILLING CODE 4310–22–P

DEPARTMENT OF THE INTERIOR

Office of Natural Resources Revenue

[Docket No. ONRR–2011–0008]

Agency Information Collection Activities: Proposed Collection, Comment Request

AGENCY: Office of Natural Resources Revenue (ONRR), Interior.

ACTION: Notice of an extension of a currently approved information collection (OMB Control Number 1012–0006).

SUMMARY: To comply with the Paperwork Reduction Act of 1995 (PRA), the Office of Natural Resources Revenue (ONRR) is inviting comments on the renewal of a collection of information that we will submit to the Office of Management and Budget (OMB) for review and approval. This information collection request (ICR) was formerly approved under OMB Control Number 1010–0122. However, OMB approved a new series number and renumbered our ICRs after the Secretary of the Interior established ONRR (the former Minerals Revenue Management, a program under the Minerals Management Service) by Secretarial Order 3299, which was effective October 1, 2010. Also ONRR published a rule, effective October 1, 2010, transferring our regulations from chapter II to chapter XII in title 30 of the Code of Federal Regulations (CFR). This ICR covers the paperwork requirements in the regulations under 30 CFR part 1243 (previously 30 CFR part 243).

DATES: Submit written comments on or before July 5, 2011.

ADDRESSES: You may submit comments on this ICR by any of the following methods. Please use "ICR 1012–0006" as an identifier in your comment.

- Electronically go to *http://www.regulations.gov.* In the entry titled "Enter Keyword or ID," enter ONRR–2011–0008 and then click search. Follow the instructions to submit public comments. The ONRR will post all comments.
- Mail comments to Hyla Hurst, Regulatory Specialist, Office of Natural Resources Revenue, P.O. Box 25165, MS 61013C, Denver, Colorado 80225. Please reference ICR 1012–0006 in your comments.
- Hand-carry comments or use an overnight courier service. Our courier address is Building 85, Room A–614, Denver Federal Center, West 6th Ave. and Kipling St., Denver, Colorado 80225. Please reference ICR 1012–0006 in your comments.

FOR FURTHER INFORMATION CONTACT: Hyla Hurst, telephone (303) 231–3495, or e-mail *hyla.hurst@onrr.gov.* You may also contact Hyla Hurst to obtain copies, at no cost, of (1) the ICR, (2) any associated forms, and (3) the regulations that require the subject collection of information.

SUPPLEMENTARY INFORMATION:

Title: 30 CFR Part 1243—Suspensions Pending Appeal and Bonding—Office of Natural Resources Revenue.

OMB Control Number: 1012–0006.

Bureau Form Numbers: Forms ONRR–4435, ONRR–4436, and ONRR–4437.

Note: These forms are still listed as Forms MMS–4435, MMS–4436, and MMS–4437 in the regulations. As ONRR completes the transition to the new organization, we will publish a rule updating our form numbers in the CFR.

Abstract: The Secretary of the Interior is responsible for mineral resource development on Federal and Indian lands and the Outer Continental Shelf (OCS). The Secretary is required by various laws to manage mineral resource production from Federal and Indian lands and the OCS, collect the royalties and other mineral revenues due, and distribute the funds collected in accordance with applicable laws. The Secretary also has a trust responsibility to manage Indian lands and seek advice and information from Indian beneficiaries. The ONRR performs the minerals revenue management functions for the Secretary and assists the Secretary in carrying out the Department's trust responsibility for Indian lands. Public laws pertaining to mineral revenues are on our Web site at *http://www.onrr.gov/Laws_R_D/PublicLawsAMR.htm.*

If ONRR determines that a lessee has not properly reported or paid, we may issue an order to pay additional royalties, a Notice of Noncompliance, or a Civil Penalty Notice requiring correct reporting or payment. Lessees then have a right to appeal those ONRR actions.

Regulations at 30 CFR part 1243 govern the submission of appropriate surety instruments to suspend compliance with orders or decisions and to stay the accrual of civil penalties (if the Office of Hearings and Appeals grants a lessee's petition to stay accrual of civil penalties), pending administrative appeal for Federal and Indian leases. For Federal oil and gas

leases, under 30 U.S.C. 1724(l) and its implementing regulations in 30 CFR part 1243, appellants who are requesting a suspension without providing a surety must submit information to demonstrate financial solvency. This ICR covers the burden hours associated with submitting financial statements or surety instruments required to stay an ONRR order, decision, or accrual of civil penalties.

Stay of Payment Pending Appeal

Title 30 CFR 1243.1 states that lessees or recipients of ONRR orders may suspend compliance with an order if they appeal in accordance with 30 CFR part 1290. Pending appeal, ONRR suspends the payment requirement if the appellant submits a formal agreement of payment in case of default, such as a bond or other surety, or, for Federal oil and gas leases, demonstrates financial solvency. If the Office of Hearings and Appeals grants a lessee's, or other recipient of a Notice of Noncompliance or Civil Penalty Notice, request to stay the accrual of civil penalties under 30 CFR 1241.55(b)(2) and 1241.63(b)(2), the lessee or other recipient must post a bond or other surety, or, for Federal oil and gas leases, demonstrate financial solvency.

The ONRR accepts the following surety types: Form ONRR–4435, Administrative Appeal Bond (formerly Form MMS–4435); Form ONRR–4436, Letter of Credit (formerly Form MMS–4436); Form ONRR–4437, Assignment of Certificate of Deposit (formerly Form MMS–4437); Self-bonding; and U.S. Treasury Securities.

When one of the surety types is selected and put in place, appellants must maintain the surety until completion of the appeal. If the appeal is decided in favor of the appellant, ONRR returns the surety to the appellant. If the appeal is decided in favor of ONRR, then we will take action to collect the total amount due or draw down on the surety. We draw down on a surety if the appellant fails to comply with requirements relating to amount due, timeframe, or surety submission or resubmission. Whenever ONRR must draw down on a surety, we must draw down the total amount due, which is defined as unpaid principal plus the interest accrued to the projected receipt date of the surety payment. Appellants may refer to the Surety Instrument Posting Instructions, which are on our Web site at *http://www.onrr.gov/FM/Forms/default.htm.*

Forms and Other Surety Types

Form ONRR–4435, Administrative Appeal Bond

Appellants may file Form ONRR–4435, Administrative Appeal Bond, which ONRR uses to secure the financial interests of the public and Indian lessors during the entire administrative and judicial appeal process. Under 30 CFR 1243.4, appellants are required to submit their contact and surety amount information on the bond to obtain the benefit of suspension of an obligation to comply with an order. The bond must be issued by a qualified surety company that is approved by the U.S. Department of the Treasury (see Department of the Treasury Circular No. 570, revised periodically in the **Federal Register**). The Director for ONRR or the delegated bond-approving officer maintains these bonds in a secure facility. After the appeal has concluded, ONRR may release and return the bond to the appellant or collect payment on the bond. If collection is necessary for a remaining balance, ONRR will issue a demand for payment to the surety company with a notice to the appellant. We will also include all interest accrued on the affected bill.

Form ONRR–4436, Letter of Credit

Appellants may choose to file Form ONRR–4436, Letter of Credit, with no modifications. Requirements at 30 CFR 1243.4 continue to apply. The Director or the delegated officer maintains the Letter of Credit (LOC) in a secure facility. The appellant is responsible for verifying that the bank provides a current Fitch rating to ONRR. After the appeal has been concluded, we may release and return the LOC to the appellant or collect payment on the LOC. If collection is necessary for a remaining balance, we will issue a demand for payment, which includes all interest assessed on the affected bill, to the bank with a notice to the appellant.

Form ONRR–4437, Assignment of Certificate of Deposit

Appellants may choose to secure a debt by requesting to use a Certificate of Deposit (CD) from their bank and submitting Form ONRR–4437, Assignment of Certificate of Deposit. Requirements at 30 CFR 1243.4 continue to apply. Appellants must file the request with ONRR prior to the invoice due date. We will accept a book-entry CD that explicitly assigns the CD to the Director. If collection of the CD is necessary for an unpaid balance, we will return unused CD funds to the appellant after total settlement of the appealed issues, including applicable interest charges.

Self-bonding

For Federal oil and gas leases, regulations at 30 CFR 1243.201 provide that no surety instrument is required when a person representing the appellant periodically demonstrates, to the satisfaction of ONRR, that the guarantor or appellant is financially solvent or otherwise able to pay the obligation. Appellants must submit a written request to "self-bond" every time a new appeal is filed. To evaluate the financial solvency and exemption from requirements of appellants to maintain a surety related to an appeal, ONRR requires appellants to submit a consolidated balance sheet, subject to annual audit. In some cases, we also require copies of the most recent tax returns (up to 3 years) filed by appellants.

In addition, appellants must annually submit financial statements, subject to annual audit, to support their net worth. The ONRR uses the consolidated balance sheet or business information supplied to evaluate the financial solvency of a lessee, designee, or payor seeking a stay of payment obligation pending review. If appellants do not have a consolidated balance sheet documenting their net worth or if they do not meet the $300 million net worth requirement, ONRR selects a business information or credit reporting service to provide information concerning an appellant's financial solvency. The ONRR charges the appellant a $50 fee each time we need to review data from a business information or credit reporting service. The fee covers our costs in determining an appellant's financial solvency.

U.S. Treasury Securities

Appellants may choose to secure their debts by requesting to use a U.S. Treasury Security (TS). Appellants must file the letter of request with ONRR prior to the invoice due date. The TS must be a U.S. Treasury note or bond with maturity equal to or greater than 1 year. The TS must equal 120 percent of the appealed amount plus 1 year of estimated interest (necessary to protect ONRR against interest rate fluctuations). The ONRR accepts only a book-entry TS.

Request to OMB

We are requesting OMB's approval to continue to collect this information. Not collecting this information would limit the Secretary's ability to discharge fiduciary duties and also may result in loss of royalty and other payments.

Proprietary information submitted to ONRR under this collection is protected, and no items of a sensitive nature are collected. A response is mandatory in order to suspend compliance with an order pending appeal.

Frequency: Annually and on occasion.

Estimated Number and Description of Respondents: 105 Federal or Indian appellants.

Estimated Annual Reporting and Recordkeeping "Hour" Burden: 105 hours.

The following chart shows the estimated annual burden hours by CFR section and paragraph. We have not included in our estimates certain requirements performed in the normal course of business and considered usual and customary.

RESPONDENTS' ESTIMATED ANNUAL BURDEN HOURS

Citation 30 CFR part 1243	Reporting and recordkeeping requirement	Hour burden	Average number of annual responses	Annual burden hours
1243.4(a)(1)	How do I suspend compliance with an order? (a) If you timely appeal an order, and if that order or portion of that order: (1) Requires you to make a payment, and you want to suspend compliance with that order, you must post a bond or other surety instrument or demonstrate financial solvency * * *.	1 hour	40 (surety instruments: Forms ONRR–4435, ONRR–4436, ONRR–4437, or TS).	40
1243.6	When must I or another person meet the bonding or financial solvency requirements under this part? If you must meet the bonding or financial solvency requirements under § 1243.4(a)(1), or if another person is meeting your bonding or financial solvency requirements, then either you or the other person must post a bond or other surety instrument or demonstrate financial solvency within 60 days after you receive the order or the Notice of Order.	Burden hours covered under § 1243.4(a)(1).		
1243.7(a)	What must a person do when posting a bond or other surety instrument or demonstrating financial solvency on behalf of an appellant? If you assume an appellant's responsibility to post a bond or other surety instrument or demonstrate financial solvency * * * (a) Must notify ONRR in writing * * * that you are assuming the appellant's responsibility * * *.	Burden hours covered under § 1243.4(a)(1).		
1243.8(a)(2) and (b)(2).	When will ONRR suspend my obligation to comply with an order? (a) *Federal leases.* * * * (2) If the amount under appeal is $10,000 or more, ONRR will suspend your obligation to comply with that order if you: (i) Submit an ONRR-specified surety instrument under subpart B of this part within a time period ONRR prescribes; or. (ii) Demonstrate financial solvency under subpart C (b) *Indian leases.* * * * (2) If the amount under appeal is $1,000 or more, ONRR will suspend your obligation to comply with that order if you submit an ONRR-specified surety instrument under subpart B of this part within a time period ONRR prescribes.	Burden hours covered under § 1243.4(a)(1).		
1243.101(b)	How will ONRR determine the amount of my bond or other surety instrument? * * * (b) If your appeal is not decided within 1 year from the filing date, you must increase the surety amount to cover additional estimated interest for another 1-year period. You must continue to do this annually * * *.	Burden hours covered under § 1243.4(a)(1).		
1243.200(a) and (b)	How do I demonstrate financial solvency? (a) To demonstrate financial solvency under this part, you must submit an audited consolidated balance sheet, and, if requested by the ONRR bond-approving officer, up to 3 years of tax returns to the ONRR, * * *. (b) You must submit an audited consolidated balance sheet annually, and, if requested, additional annual tax returns on the date ONRR first determined that you demonstrated financial solvency as long as you have active appeals, or whenever ONRR requests. * * *	1 hour	65 self-bonding submissions.	65
1243.201(c)(1), (c)(2)(i) and (c)(2)(ii) and (d)(2).	How will ONRR determine if I am financially solvent? * * * (c) If your net worth, minus the amount we would require as surety under subpart B for all orders you have appealed is less than $300 million, you must submit * * *:	Burden hours covered under §§ 1243.4(a)(1) and 1243.200(a) and (b).		

RESPONDENTS' ESTIMATED ANNUAL BURDEN HOURS—Continued

Citation 30 CFR part 1243	Reporting and recordkeeping requirement	Hour burden	Average number of annual responses	Annual burden hours
	(1) A written request asking us to consult a business-information, or credit-reporting service or program to determine your financial solvency; and (2) A nonrefundable $50 processing fee: (i) You must pay the processing fee * * *; (ii) You must submit the fee with your request * * * and then annually on the date we first determined that you demonstrated financial solvency, as long as you are not able to demonstrate financial solvency * * * and you have active appeals. (d)* * * (2) For us to consider you financially solvent, the business-information or credit–reporting service or program must demonstrate your degree of risk as low to moderate: * * *			
1243.202(c)	When will ONRR monitor my financial solvency? * * * (c) If our bond-approving officer determines that you are no longer financially solvent, you must post a bond or other ONRR-specified surety instrument under subpart B.	Burden hours covered under § 1243.4(a)(1).		
Total Burden			105	105

Estimated Annual Reporting and Recordkeeping "Non-hour" Cost Burden: There are no additional recordkeeping costs associated with this information collection. However, ONRR estimates 5 appellants per year will pay a $50 fee to obtain credit data from a business information or credit reporting service, which is a total "non-hour" cost burden of $250 per year (5 appellants per year × $50 = $250).

Public Disclosure Statement: The PRA (44 U.S.C. 3501 *et seq.*) provides that an agency may not conduct or sponsor, and a person is not required to respond to, a collection of information unless it displays a currently valid OMB control number.

Comments: Before submitting an ICR to OMB, PRA section 3506(c)(2)(A) requires each agency to "* * * provide 60-day notice in the **Federal Register** * * * and otherwise consult with members of the public and affected agencies concerning each proposed collection of information * * *." Agencies must specifically solicit comments to: (a) Evaluate whether the proposed collection of information is necessary for the agency to perform its duties, including whether the information is useful; (b) evaluate the accuracy of the agency's estimate of the burden of the proposed collection of information; (c) enhance the quality, usefulness, and clarity of the information to be collected; and (d) minimize the burden on the respondents, including the use of automated collection techniques or other forms of information technology.

The PRA also requires agencies to estimate the total annual reporting "non-hour cost" burden to respondents or recordkeepers resulting from the collection of information. If you have costs to generate, maintain, and disclose this information, you should comment and provide your total capital and startup cost components or annual operation, maintenance, and purchase of service components. You should describe the methods you use to estimate major cost factors, including system and technology acquisition, expected useful life of capital equipment, discount rate(s), and the period over which you incur costs. Capital and startup costs include, among other items, computers and software you purchase to prepare for collecting information; monitoring, sampling, and testing equipment; and record storage facilities. Generally, your estimates should not include equipment or services purchased: (i) Before October 1, 1995; (ii) to comply with requirements not associated with the information collection; (iii) for reasons other than to provide information or keep records for the Government; or (iv) as part of customary and usual business or private practices.

We will summarize written responses to this notice and address them in our ICR submission for OMB approval, including appropriate adjustments to the estimated burden. We will provide a copy of the ICR to you without charge upon request. We also will post the ICR on our Web site at *http://www.onrr.gov/Laws_R_D/FRNotices/ICR0122.htm.*

Public Comment Policy: We will post all comments, including names and addresses of respondents, at *http://www.regulations.gov.* Before including your address, phone number, e-mail address, or other personal identifying information in your comment, be advised that your entire comment—including your personal identifying information—may be made publicly available at any time. While you can ask us in your comment to withhold from public view your personal identifying information, we cannot guarantee that we will be able to do so.

Information Collection Clearance Officer: Rachel Drucker (202) 208–3568.

Dated: April 29, 2011.

Gregory J. Gould,

Director, Office of Natural Resources Revenue.

[FR Doc. 2011–10905 Filed 5–3–11; 8:45 am]

BILLING CODE 4310–MR–P

DEPARTMENT OF THE INTERIOR

Office of Natural Resources Revenue

[Docket No. ONRR–2011–0009]

Agency Information Collection Activities: Proposed Collection, Comment Request

AGENCY: Office of Natural Resources Revenue (ONRR), Interior.

ACTION: Notice of an extension of a currently approved information collection (OMB Control Number 1012–0008).

SUMMARY: To comply with the Paperwork Reduction Act of 1995 (PRA), the Office of Natural Resources Revenue (ONRR) is inviting comments on a collection of information that we will submit to the Office of Management and Budget (OMB) for review and approval. This information collection request (ICR) was formerly approved under OMB Control Number 1010–0107.

However, OMB approved a new series number and renumbered our ICRs after the Secretary of the Interior established ONRR (the former Minerals Revenue Management, a program under the Minerals Management Service) by Secretarial Order 3299, which was effective October 1, 2010. Also ONRR published a rule, effective October 1, 2010, transferring our regulations from chapter II to chapter XII in title 30 of the *Code of Federal Regulations* (CFR. This ICR covers the paperwork requirements in the regulations under 30 CFR part 1218 (previously 30 CFR part 218).

DATES: Submit written comments on or before *July 5, 2011.*

ADDRESSES: You may submit comments on this ICR by any of the following methods. Please use "ICR 1012–0008" as an identifier in your comment.

- Electronically go to *http://www.regulations.gov*. In the entry titled "Enter Keyword or ID," enter ONRR–2011–0009, and then click search. Follow the instructions to submit public comments. The ONRR will post all comments.
- Mail comments to Hyla Hurst, Regulatory Specialist, Office of Natural Resources Revenue, P.O. Box 25165, MS 61013B, Denver, Colorado 80225. Please reference ICR 1012–0008 in your comments.
- Hand-carry comments or use an overnight courier service. Our courier address is Building 85, Room A–614, Denver Federal Center, West 6th Ave. and Kipling St., Denver, Colorado 80225. Please reference ICR 1012–0008 in your comments.

FOR FURTHER INFORMATION CONTACT: Hyla Hurst, telephone (303) 231–3495, or e-mail *hyla.hurst@onrr.gov*. You may also contact Hyla Hurst to obtain copies, at no cost, of (1) the ICR, (2) any associated forms, and (3) the regulations that require the subject collection of information.

SUPPLEMENTARY INFORMATION:

Title: 30 CFR Part 1218, Collection of Monies Due the Federal Government.

OMB Control Number: 1012–0008.

Bureau Form Number: Form ONRR–4425.

Note: This form is still listed as Form MMS–4425 in the regulations. As ONRR completes the transition to the new organization, we will publish a rule updating our form numbers in the CFR.

Abstract: The Secretary of the Interior is responsible for mineral resource development on Federal and Indian lands and the Outer Continental Shelf (OCS). The Secretary is required by various laws to manage mineral resource production from Federal and Indian lands and the OCS, collect the royalties and other mineral revenues due, and distribute the funds collected in accordance with applicable laws. The Secretary also has a trust responsibility to manage Indian lands and seek advice and information from Indian beneficiaries. The ONRR performs the mineral revenue management functions for the Secretary and assists the Secretary in carrying out the Department's trust responsibility for Indian lands. Public laws pertaining to mineral revenues are on our Web site at *http://www.onrr.gov/Laws_R_D/PublicLawsAMR.htm.*

Minerals produced from Federal and Indian leases vary greatly in the nature of occurrence, production, and processing methods. When a company or an individual enters into a lease to explore, develop, produce, and dispose of minerals from Federal or Indian lands, that company or individual agrees to pay the lessor a share in an amount or value of production from the leased lands. The lessee is required to report various kinds of information to the lessor relative to the disposition of the leased minerals. Such information is generally available within the records of the lessee or others involved in developing, transporting, processing, purchasing, or selling such minerals. The information collected includes data necessary to ensure that production is accurately valued and royalties are appropriately paid.

This ICR covers unique reporting circumstances including (1) cross-lease netting in calculation of late-payment interest; (2) designation of designee; and (3) and Tribal permission for recoupment on Indian oil and gas leases.

Cross-Lease Netting in Calculation of Late-Payment Interest

Regulations at § 1218.54 require ONRR to assess interest on unpaid or underpaid amounts. The ONRR distributes these interest revenues to states, Indian Tribes, and the U.S. Treasury, based on financial lease distribution information. Current regulations at § 1218.42 provide that an overpayment on a lease or leases may be offset against an underpayment on a different lease or leases to determine the net payment subject to interest, when certain conditions are met. This is called cross-lease netting. However, sections 6(a), (b), and (c) of the Royalty Simplification and Fairness Act (RSFA) require ONRR to pay interest on lessees' Federal oil and gas overpayments made on or after February 13, 1997 (6 months after the August 13, 1996, enactment of RSFA). The ONRR implemented this RSFA provision in 1997 and began calculating interest on both underpayments and overpayments for Federal oil and gas leases, making the cross-lease netting provisions at § 1218.42 no longer applicable for these leases. The ONRR estimates that, in about seven cases per year, lessees must comply with the provisions of § 1218.42(b) and (c) for Indian Tribal leases or Federal leases other than oil and gas, demonstrating that cross-lease netting is correct by submitting production reports, pipeline allocation reports, or other similar documentary evidence. This information is necessary for ONRR to determine the correct amount of interest owed by the lessee and to ensure that proper value is collected.

Designation of Designee

The RSFA established that lessees (owners, primarily, of operating rights, or secondarily, lease record title) are responsible for making royalty and related payments on Federal oil and gas leases. These RSFA requirements are codified at § 1218.52. It is common, however, for a payor rather than a lessee to make these payments. When a payor makes payments on behalf of a lessee, RSFA section 6(g) requires that the lessee designate the payor as its designee and notify ONRR of this arrangement in writing. Form ONRR–4425, Designation Form for Royalty Payment Responsibility (formerly Form MMS–4425), was designed to request all the information necessary for lessees to comply with these RSFA requirements when they choose to designate an agent to pay for them.

Tribal Permission for Recoupment on Indian Oil and Gas Leases

Regulations at § 1218.53(b) allow lessees with written permission from the Tribe to recoup overpayments on one lease against a different lease for which the Tribe is the lessor. The payor must provide ONRR with a copy of the Tribe's written permission. Generally, a payor may recoup an overpayment against the current month's royalties or other revenues owed on the same Tribal lease. For any month, a payor may not recoup more than 50 percent of the royalties or other revenues owed in that month, under an individual allotted lease, or more than 100 percent of the royalties or other revenues owed in that month, under a Tribal lease. Lessees report oil and gas lease recoupments on Form MMS–2014, Report of Sales and Royalty Remittance (which will be renumbered as Form ONRR–2014, as we complete the process of updating our forms and the regulations). The burden

hours are covered under ICR 1012–0004, formerly ICR 1010–0139.

Request to OMB

We are requesting OMB's approval to continue to collect this information. Not collecting this information would limit the Secretary's ability to discharge the duties of the office and may also result in loss of royalty payments. Proprietary information submitted is protected, and there are no questions of a sensitive nature included in this information collection.

Frequency: On occasion.

Estimated Number and Description of Respondents: 1,630 Federal and Indian lessees.

Estimated Annual Reporting and Recordkeeping "Hour" Burden: 1,255 hours.

We have not included in our estimates certain requirements performed in the normal course of business and considered usual and customary. The following chart shows the estimated burden hours by CFR section and paragraph:

RESPONDENTS' ESTIMATED ANNUAL BURDEN HOURS

Citation 30 CFR part 1218	Reporting and recordkeeping requirement	Hour burden	Average number of annual responses	Annual burden hours
Subpart A—General Provisions—Cross-lease netting in calculation of late-payment interest				
1218.42(b) and (c)	Cross-lease netting in calculation of late-payment interest. (b) Royalties attributed to production from a lease or leases which should have been attributed to production from a different lease or leases may be offset * * * if * * * the payor submits production reports, pipeline allocation reports, or other similar documentary evidence pertaining to the specific production involved which verifies the correct production information * * *. (c) If ONRR assesses late-payment interest and the payor asserts that some or all of the interest is not owed * * * the burden is on the payor to demonstrate that the exception applies * * *.	2	25	50
Subpart B—Oil and Gas, General—How does a lessee designate a Designee?				
1218.52 (a), (c), and (d)	How does a lessee designate a Designee? (a) If you are a lessee under 30 U.S.C. 1701(7), and you want to designate a person to make all or part of the payments due under a lease on your behalf * * * you must notify ONRR * * * in writing of such designation * * *. (c) If you want to terminate a designation * * * you must provide [the following] to ONRR in writing * * *. (d) ONRR may require you to provide notice when there is a change in the percentage of your record title or operating rights ownership. The ONRR currently uses Form MMS–4425, Designation Form for Royalty Payment Responsibility, to collect this information.	0.72	1,600	1,200
Subpart B—Oil and Gas, General—Recoupment of overpayments on Indian mineral leases				
1218.53(b)	Recoupment of overpayments on Indian mineral leases. (b) With written permission authorized by Tribal statute or resolution, a payor may recoup an overpayment against royalties or other revenues owed . . . under other leases * * *. A copy of the Tribe's written permission must be furnished to ONRR * * *.	1	5	5
Total Burden			1,630	1,255

Estimated Annual Reporting and Recordkeeping "Non-hour Cost" Burden: We have identified no "non-hour cost" burden associated with the collection of information.

Public Disclosure Statement: The PRA (44 U.S.C. 3501 *et seq.*) provides that an agency may not conduct or sponsor, and a person is not required to respond to, a collection of information unless it displays a currently valid OMB control number.

Comments: Before submitting an ICR to OMB, PRA section 3506(c)(2)(A) requires each agency to "* * * provide 60-day notice in the **Federal Register** * * * and otherwise consult with members of the public and affected agencies concerning each proposed collection of information * * *." Agencies must specifically solicit

comments to: (a) Evaluate whether the proposed collection of information is necessary for the agency to perform its duties, including whether the information is useful; (b) evaluate the accuracy of the agency's estimate of the burden of the proposed collection of information; (c) enhance the quality, usefulness, and clarity of the information to be collected; and (d) minimize the burden on the respondents, including the use of automated collection techniques or other forms of information technology.

The PRA also requires agencies to estimate the total annual reporting "non-hour cost" burden to respondents or recordkeepers resulting from the collection of information. If you have costs to generate, maintain, and disclose this information, you should comment and provide your total capital and startup cost components or annual operation, maintenance, and purchase of service components. You should describe the methods you use to estimate major cost factors, including system and technology acquisition, expected useful life of capital equipment, discount rate(s), and the period over which you incur costs. Capital and startup costs include, among other items, computers and software you purchase to prepare for collecting information; monitoring, sampling, and testing equipment; and record storage facilities. Generally, your estimates should not include equipment or services purchased: (i) Before October 1, 1995; (ii) to comply with requirements not associated with the information collection; (iii) for reasons other than to provide information or keep records for the Government; or (iv) as part of customary and usual business or private practices.

We will summarize written responses to this notice and address them in our ICR submission for OMB approval, including appropriate adjustments to the estimated burden. We will provide a copy of the ICR to you without charge upon request. We also will post the ICR on our Web site at *http://www.onrr.gov/Laws_R_D/FRNotices/ICR0107.htm.*

Public Comment Policy: We will post all comments, including names and addresses of respondents, at *http://www.regulations.gov*. Before including your address, phone number, e-mail address, or other personal identifying information in your comment, be advised that your entire comment—including your personal identifying information—may be made publicly available at any time. While you can ask us in your comment to withhold from public view your personal identifying information, we cannot guarantee that we will be able to do so.

Information Collection Clearance Officer: Rachel Drucker (202) 208–3568.

Dated: April 28, 2011.

Gregory J. Gould,

Director, Office of Natural Resources Revenue.

[FR Doc. 2011–10906 Filed 5–3–11; 8:45 am]

BILLING CODE 4310–MR–P

INTERNATIONAL TRADE COMMISSION

[Inv. No. 337–TA–772]

Certain Polyimide Films, Products Containing Same, and Related Methods; Notice of Institution of Investigation

AGENCY: U.S. International Trade Commission.

ACTION: Notice.

SUMMARY: Notice is hereby given that a complaint was filed with the U.S. International Trade Commission on April 1, 2011, under section 337 of the Tariff Act of 1930, as amended, 19 U.S.C. 1337, on behalf of Kaneka Corporation of Japan. The complaint alleges violations of section 337 based upon the importation into the United States, the sale for importation, and the sale within the United States after importation of certain polyimide films, products containing same, and related methods by reason of infringement of certain claims of U.S. Patent No. 6,264,866 ("the '866 patent"); U.S. Patent No. 6,746,639 ("the '639 patent"); U.S. Patent No. 7,018,704 ("the '704 patent"); and U.S. Patent No. 7,691,961 ("the '961 patent"). The complaint further alleges that an industry in the United States exists as required by subsection (a)(2) of section 337.

The complainant requests that the Commission institute an investigation and, after the investigation, issue an exclusion order and a cease and desist order.

ADDRESSES: The complaint, except for any confidential information contained therein, is available for inspection during official business hours (8:45 a.m. to 5:15 p.m.) in the Office of the Secretary, U.S. International Trade Commission, 500 E Street, SW., Room 112, Washington, DC 20436, telephone 202–205–2000. Hearing impaired individuals are advised that information on this matter can be obtained by contacting the Commission's TDD terminal on 202–205–1810. Persons with mobility impairments who will need special assistance in gaining access to the Commission should contact the Office of the Secretary at 202–205–2000. General information concerning the Commission may also be obtained by accessing its Internet server at *http://www.usitc.gov.* The public record for this investigation may be viewed on the Commission's electronic docket (EDIS) at *http://edis.usitc.gov.*

FOR FURTHER INFORMATION CONTACT: The Office of Dockets Services, U.S. International Trade Commission, telephone (202) 205–1802.

Authority: The authority for institution of this investigation is contained in section 337 of the Tariff Act of 1930, as amended, and in section 210.10 of the Commission's Rules of Practice and Procedure, 19 CFR 210.10 (2011).

Scope of Investigation: Having considered the complaint, the U.S. International Trade Commission, on April 27, 2011, *ordered that*—

(1) Pursuant to subsection (b) of section 337 of the Tariff Act of 1930, as amended, an investigation be instituted to determine whether there is a violation of subsection (a)(1)(B) of section 337 in the importation into the United States, the sale for importation, or the sale within the United States after importation of certain polyimide films, products containing same, and related methods that infringe one or more of claims 1–14 of the '866 patent; claims 1–6 of the '639 patent; claims 1–5 of the '704 patent; and claims 1–20 of the '961 patent, and whether an industry in the United States exists as required by subsection (a)(2) of section 337;

(2) For the purpose of the investigation so instituted, the following are hereby named as parties upon which this notice of investigation shall be served:

(a) The complainant is: Kaneka Corporation, 3–2–4 Nakanoshima, Kita-ku, Osaka 530–8288, Japan.

(b) The respondents are the following entities alleged to be in violation of section 337, and are the parties upon which the complaint is to be served:

SKC Kolon PI, Inc., 9th Fl. Daego Building, 1591–10, Gwangyang-dong, Dongan-gu, Anyang-si, Gyeonggi-do, 431–060, Korea;

SKC Inc., 1000 SKC Drive, Covington, GA 30014.

(3) For the investigation so instituted, the Honorable Paul J. Luckern, Chief Administrative Law Judge, U.S. International Trade Commission, shall designate the presiding Administrative Law Judge.

The Office of Unfair Import Investigations will not participate as a party in this investigation.

Responses to the complaint and the notice of investigation must be submitted by the named respondents in accordance with section 210.13 of the Commission's Rules of Practice and Procedure, 19 CFR 210.13. Pursuant to 19 CFR 201.16(d)–(e) and 210.13(a), such responses will be considered by the Commission if received not later than 20 days after the date of service by the Commission of the complaint and the notice of investigation. Extensions of time for submitting responses to the complaint and the notice of investigation will not be granted unless good cause therefor is shown.

Failure of a respondent to file a timely response to each allegation in the complaint and in this notice may be deemed to constitute a waiver of the right to appear and contest the allegations of the complaint and this notice, and to authorize the administrative law judge and the Commission, without further notice to the respondent, to find the facts to be as alleged in the complaint and this notice and to enter an initial determination and a final determination containing such findings, and may result in the issuance of an exclusion order or a cease and desist order or both directed against the respondent.

By order of the Commission.

Issued: April 28, 2011.

William R. Bishop,

Acting Secretary to the Commission.

[FR Doc. 2011–10754 Filed 5–3–11; 8:45 am]

BILLING CODE P

DEPARTMENT OF JUSTICE

Drug Enforcement Administration

Importer of Controlled Substances; Notice of Application

This is notice that on February 2, 2011, Rhodes Technologies, 498 Washington Street, Coventry, Rhode Island 02816, made application by renewal to the Drug Enforcement Administration (DEA) for registration as an importer of the following basic classes of controlled substances in schedule II:

Drug	Schedule
Raw Opium (9600)	I
Concentrate of Poppy Straw (9670).	II

The company plans to import the listed controlled substances in order to bulk manufacture controlled substances in Active Pharmaceutical Ingredient (API) form. The company distributes the manufactured APIs in bulk form only to its customers.

As explained in the Correction to Notice of Application pertaining to Rhodes Technologies, 72 FR 3417 (2007), comments and requests for hearings on applications to import narcotic raw material are not appropriate.

As noted in a previous notice published in the **Federal Register** on September 23, 1975, 40 FR 43745, all applicants for registration to import a basic classes of any controlled substances in schedule I or II are, and will continue to be, required to demonstrate to the Deputy Assistant Administrator, Office of Diversion Control, Drug Enforcement Administration, that the requirements for such registration pursuant to 21 U.S.C. 958(a); 21 U.S.C. 823(a); and 21 CFR 1301.34(b), (c), (d), (e), and (f) are satisfied.

Dated: April 28, 2011.

Joseph T. Rannazzisi,

Deputy Assistant Administrator, Office of Diversion Control, Drug Enforcement Administration.

[FR Doc. 2011–10914 Filed 5–3–11; 8:45 am]

BILLING CODE 4410–09–P

DEPARTMENT of JUSTICE

Drug Enforcement Administration

Importer of Controlled Substances; Notice of Registration

By Notice dated November 18, 2010, and published in the **Federal Register** on December 3, 2010, 75 FR 75494, Clinical Supplies Management, Inc., 342 42nd Street South, Fargo, North Dakota 58103, made application by renewal to the Drug Enforcement Administration (DEA) to be registered as an importer of Sufentanil (9740), a basic class of controlled substance listed in schedule II.

The company plans to import the listed controlled substance with the sole purpose of packaging, labeling, and distributing to customers which are qualified clinical sites conducting clinical trials under the auspices of an FDA-approved clinical study.

No comments or objections have been received. DEA has considered the factors in 21 U.S.C. 823(a) and 952(a) and determined that the registration of Clinical Supplies Management, Inc., to import the basic class of controlled substance is consistent with the public interest and with United States obligations under international treaties, conventions, or protocols in effect on May 1, 1971. DEA has investigated Clinical Supplies Management, Inc., to ensure that the company's registration is consistent with the public interest. The investigation has included inspection and testing of the company's physical security systems, verification of the company's compliance with state and local laws, and a review of the company's background and history. Therefore, pursuant to 21 U.S.C. 952(a) and 958(a), and in accordance with 21 CFR 1301.34, the above named company is granted registration as an importer of the basic class of controlled substance listed.

Dated: April 26, 2011.

Joseph T. Rannazzisi,

Deputy Assistant Administrator, Office of Diversion Control, Drug Enforcement Administration.

[FR Doc. 2011–10862 Filed 5–3–11; 8:45 am]

BILLING CODE 4410–09–P

DEPARTMENT OF JUSTICE

Drug Enforcement Administration

Importer of Controlled Substances; Notice of Registration

By Notice dated November 18, 2010, and published in the **Federal Register** on December 3, 2010, 75 FR 75495, Fisher Clinical Services, Inc., 7554 Schantz Road, Allentown, Pennsylvania 18106, made application by renewal to the Drug Enforcement Administration (DEA) to be registered as an importer of the following basic classes of controlled substances:

Drug	Schedule
Noroxymorphone (9668)	II
Tapentadol (9780)	II

The company plans to import the listed substances for analytical research and clinical trials.

No comments or objections have been received. DEA has considered the factors in 21 U.S.C. 823(a) and 952(a) and has determined that the registration of Fisher Clinical Services, Inc. to import the basic classes of controlled substances is consistent with the public interest and with United States obligations under international treaties, conventions, or protocols in effect on May 1, 1971. DEA has investigated Fisher Clinical Services, Inc. to ensure that the company's registration is consistent with the public interest. The investigation has included inspection and testing of the company's physical security systems, verification of the company's compliance with state and local laws, and a review of the company's background and history.

Therefore, pursuant to 21 U.S.C. 952(a) and 958(a), and in accordance with 21 CFR 1301.34, the above named company is granted registration as an importer of the basic classes of controlled substances listed.

Dated: April 26, 2011.

Joseph T. Rannazzisi,

Deputy Assistant Administrator, Office of Diversion Control, Drug Enforcement Administration.

[FR Doc. 2011–10863 Filed 5–3–11; 8:45 am]

BILLING CODE 4410–09–P

DEPARTMENT OF JUSTICE

Drug Enforcement Administration

Importer of Controlled Substances; Notice of Registration

By Notice dated November 19, 2010, and published in the **Federal Register** on December 3, 2010, 75 FR 75496, Tocris Cookson, Inc., 16144 Westwoods Business Park, Ellisville, Missouri 63021–4500, made application by renewal to the Drug Enforcement Administration (DEA) to be registered as an importer of the following basic classes of controlled substances:

Drug	Schedule
Marihuana (7360)	I
Tetrahydrocannabinols (7370)	I
4-Bromo-2,5-dimethoxyamphetamine (7391)	I
3,4-Methylenedioxymethamphetamine (7405)	I
Amphetamine (1100)	II
Phencyclidine (7471)	II
Cocaine (9041)	II
Diprenorphine (9058)	II
Fentanyl (9801)	II

The company plans to import small quantities of the above-listed controlled substances for distribution to its customers for non-clinical, laboratory-based research only.

In reference to drug code 7360 (Marihuana), the company plans to import synthetic cannabinoid agonists.

In reference to drug code 7370 (Tetrahydrocannabinols), the company will import a synthetic Delta-9-THC. No other activity for these drug codes are authorized for this registration.

No comments or objections have been received. DEA has considered the factors in 21 U.S.C. 823(a) and 952(a), and determined that the registration of Tocris Cookson, Inc. to import the basic classes of controlled substances is consistent with the public interest and with United States obligations under international treaties, conventions, or protocols in effect on May 1, 1971. DEA has investigated Tocris Cookson, Inc. to ensure that the company's registration is consistent with the public interest. The investigation has included inspection and testing of the company's physical security systems, verification of the company's compliance with state and local laws, and a review of the company's background and history. Therefore, pursuant to 21 U.S.C. 952(a) and 958(a), and in accordance with 21 CFR 1301.34, the above named company is granted registration as an importer of the basic classes of controlled substances listed.

Dated: April 26, 2011.

Joseph T. Rannazzisi,

Deputy Assistant Administrator, Office of Diversion Control, Drug Enforcement Administration.

[FR Doc. 2011–10864 Filed 5–3–11; 8:45 am]

BILLING CODE 4410–09–P

DEPARTMENT OF JUSTICE

Drug Enforcement Administration

Manufacturer of Controlled Substances; Notice of Application

Pursuant to § 1301.33(a) Title 21 of the Code of Federal Regulations (CFR), this is notice that on February 9, 2011, Rhodes Technologies, 498 Washington Street, Coventry, Rhode Island 02816, made application by renewal to the Drug Enforcement Administration (DEA) to be registered as a bulk manufacturer of the following basic classes of controlled substances:

Drug	Schedule
Tetrahydrocannabinols (7370)	I
Methylphenidate (1724)	II
Codeine (9050)	II
Dihydrocodeine (9120)	II
Oxycodone (9143)	II
Hydromorphone (9150)	II
Hydrocodone (9193)	II
Oripavine (9330)	II
Thebaine (9333)	II
Oxymorphone (9652)	II
Noroxymorphone (9668)	II
Fentanyl (9801)	II

The company plans to manufacture the listed controlled substances in bulk for conversion and sale to dosage form manufacturers.

Any other such applicant, and any person who is presently registered with DEA to manufacture such substances, may file comments or objections to the issuance of the proposed registration pursuant to 21 CFR 1301.33(a).

Any such written comments or objections should be addressed, in quintuplicate, to the Drug Enforcement Administration, Office of Diversion Control, Federal Register Representative (ODL), 8701 Morrissette Drive, Springfield, Virginia 22152; and must be filed no later than July 5, 2011.

Dated: April 25, 2011.

Joseph T. Rannazzisi,

Deputy Assistant Administrator, Office of Diversion Control, Drug Enforcement Administration.

[FR Doc. 2011–10853 Filed 5–3–11; 8:45 am]

BILLING CODE 4410–09–P

DEPARTMENT OF JUSTICE

Drug Enforcement Administration

Manufacturer of Controlled Substances; Notice of Application

Pursuant to § 1301.33(a) Title 21 of the Code of Federal Regulations (CFR), this is notice that on February 15, 2011, Siemens Healthcare Diagnostics Inc., *Attn:* RA, 100 GBC Drive, Mail Stop 514, Newark, Delaware 19702, made application by renewal to the Drug Enforcement Administration (DEA) to be registered as a bulk manufacturer of

the following basic classes of controlled substances:

Drug	Schedule
Tetrahydrocannabinols (7370)	I
Ecgonine (9180)	II
Morphine (9300)	II

The company plans to produce the listed controlled substances in bulk to be used in the manufacture of reagents and drug calibrator/controls which are DEA exempt products.

Any other such applicant, and any person who is presently registered with DEA to manufacture such substances, may file comments or objections to the issuance of the proposed registration pursuant to 21 CFR 1301.33(a).

Any such written comments or objections should be addressed, in quintuplicate, to the Drug Enforcement Administration, Office of Diversion Control, Federal Register Representative (ODL), 8701 Morrissette Drive, Springfield, Virginia 22152; and must be filed no later than July 5, 2011.

Dated: April 25, 2011.

Joseph T. Rannazzisi,

Deputy Assistant Administrator, Office of Diversion Control, Drug Enforcement Administration.

[FR Doc. 2011–10861 Filed 5–3–11; 8:45 am]

BILLING CODE 4410–09–P

DEPARTMENT OF JUSTICE

Drug Enforcement Administration

Manufacturer of Controlled Substances; Notice of Application

Pursuant to § 1301.33(a), Title 21 of the Code of Federal Regulations (CFR), this is notice that on January 5, 2011, Johnson Matthey Pharma Services, 70 Flagship Drive, North Andover, Massachusetts 01845, made application by renewal to the Drug Enforcement Administration (DEA) to be registered as a bulk manufacturer of the following basic classes of controlled substances:

Drug	Schedule
Amphetamine (1100)	II
Methylphenidate (1724)	II
Hydrocodone (9193)	II

The company plans to utilize this facility to manufacture small quantities of the listed controlled substances in bulk and to conduct analytical testing in support of the company's primary manufacturing facility in West Deptford, New Jersey. The controlled substances manufactured in bulk at this facility will be distributed to the company's customers.

Any other such applicant, and any person who is presently registered with DEA to manufacture such substances, may file comments or objections to the issuance of the proposed registration pursuant to 21 CFR 1301.33(a).

Any such written comments or objections should be addressed, in quintuplicate, to the Drug Enforcement Administration, Office of Diversion Control, Federal Register Representative (ODL), 8701 Morrissette Drive, Springfield, Virginia 22152; and must be filed no later than July 5, 2011.

Dated: April 28, 2011.

Joseph T. Rannazzisi,

Deputy Assistant Administrator, Office of Diversion Control, Drug Enforcement Administration.

[FR Doc. 2011–10913 Filed 5–3–11; 8:45 am]

BILLING CODE 4410–09–P

DEPARTMENT OF JUSTICE

Drug Enforcement Administration

Manufacturer of Controlled Substances; Notice of Registration

By Notice dated January 26, 2011, and published in the **Federal Register** on February 3, 2011, 76 FR 6159, Johnson Matthey Inc., Pharmaceuticals Materials, 900 River Road, Conshohocken, Pennsylvania 19428, made application by letter to the Drug Enforcement Administration (DEA) to be registered as a bulk manufacturer of the following basic classes of controlled substances:

Drug	Schedule
Gamma Hydroxybutyric Acid (2010)	I
Amphetamine (1100)	II
Methylphenidate (1724)	II
Codeine (9050)	II
Oxycodone (9143)	II
Hydrocodone (9193)	II
Morphine (9300)	II
Thebaine (9333)	II

The company plans to manufacture the listed controlled substances in bulk for sale to its customers. The Thebaine (9333) will also be used to manufacture other controlled substances for sale in bulk to its customers.

No comments or objections have been received. DEA has considered the factors in 21 U.S.C. 823(a) and determined that the registration of Johnson Matthey Inc. to manufacture the listed basic classes of controlled substances is consistent with the public interest at this time. DEA has investigated Johnson Matthey Inc. to ensure that the company's registration is consistent with the public interest. The investigation has included inspection and testing of the company's physical security systems, verification of the company's compliance with state and local laws, and a review of the company's background and history. Therefore, pursuant to 21 U.S.C. 823(a), and in accordance with 21 CFR 1301.33, the above named company is granted registration as a bulk manufacturer of the basic classes of controlled substances listed.

Dated: April 26, 2011.

Joseph T. Rannazzisi,

Deputy Assistant Administrator, Office of Diversion Control, Drug Enforcement Administration.

[FR Doc. 2011–10865 Filed 5–3–11; 8:45 am]

BILLING CODE 4410–09–P

DEPARTMENT OF LABOR

Occupational Safety and Health Administration

[Docket No. OSHA–2011–0059]

Occupational Exposure to Hazardous Chemicals in Laboratories Standard; Extension of the Office of Management and Budget's (OMB) Approval of Information Collection (Paperwork) Requirements

AGENCY: Occupational Safety and Health Administration (OSHA), Labor.

ACTION: Request for public comments.

SUMMARY: OSHA solicits public comments concerning its proposal to extend OMB approval of the

information collection requirements specified in the Standard on Occupational Exposure to Hazardous Chemicals in Laboratories.

DATES: Comments must be submitted (postmarked, sent, or received) by July 5, 2011.

ADDRESSES:

Electronically: You may submit comments and attachments electronically at *http://www.regulations.gov,* which is the Federal eRulemaking Portal. Follow the instructions online for submitting comments.

Facsimile: If your comments, including attachments, are not longer than 10 pages, you may fax them to the OSHA Docket Office at (202) 693–1648.

Mail, hand delivery, express mail, messenger, or courier service: When using this method, you must submit your comments and attachments to the OSHA Docket Office, Docket No. OSHA–2011–0059, U.S. Department of Labor, Room N–2625, 200 Constitution Avenue, NW., Washington, DC 20210. Deliveries (hand, express mail, messenger, and courier service) are accepted during the Department of Labor's and Docket Office's normal business hours, 8:15 a.m. to 4:45 p.m., e.t.

Instructions: All submissions must include the Agency name and OSHA docket number (OSHA–2011–0059) for the Information Collection Request (ICR). All comments, including any personal information you provide, are placed in the public docket without change, and may be made available online at *http://www.regulations.gov.* For further information on submitting comments see the "Public Participation" heading in the section of this notice titled **SUPPLEMENTARY INFORMATION.**

Docket: To read or download comments or other material in the docket, go to *http://www.regulations.gov* or the OSHA Docket Office at the address above. All documents in the docket (including this **Federal Register** notice) are listed in the *http://www.regulations.gov* index; however, some information (*e.g.,* copyrighted material) is not publicly available to read or download through the Web site. All submissions, including copyrighted material, are available for inspection and copying at the OSHA Docket Office. You also may contact Todd Owen at the address below to obtain a copy of the ICR.

FOR FURTHER INFORMATION CONTACT: Todd Owen, Directorate of Standards and Guidance, OSHA, U.S. Department of Labor, Room N–3609, 200 Constitution Avenue, NW., Washington, DC 20210; telephone (202) 693–2222.

SUPPLEMENTARY INFORMATION:

1. Background

The Department of Labor, as part of its continuing effort to reduce paperwork and respondent (i.e., employer) burden, conducts a preclearance consultation program to provide the public with an opportunity to comment on proposed and continuing information collection requirements in accordance with the Paperwork Reduction Act of 1995 (44 U.S.C. 3506(c)(2)(A)).

This program ensures that information is in the desired format, reporting burden (time and costs) is minimal, collection instruments are clearly understood, and OSHA's estimate of the information collection burden is accurate. The Occupational Safety and Health Act of 1970 (the OSH Act) (29 U.S.C. 651 *et seq.*) authorizes information collection by employers as necessary or appropriate for enforcement of the OSH Act or for developing information regarding the causes and prevention of occupational injuries, illnesses, and accidents (29 U.S.C. 657). The OSH Act also requires that OSHA obtain such information with minimum burden upon employers, especially those operating small businesses, and to reduce to the maximum extent feasible unnecessary duplication of efforts in obtaining information (29 U.S.C. 657).

The Standard entitled "Occupational Exposure to Hazardous Chemicals in Laboratories" (29 CFR 1910.1450; the "Standard") applies to laboratories that use hazardous chemicals in accordance with the Standard's definitions for "laboratory use of hazardous chemicals" and "laboratory scale." The Standard requires these laboratories to maintain worker exposures at or below the permissible exposure limits specified for the hazardous chemicals in 29 CFR part 1910, subpart Z. They do so by developing a written Chemical Hygiene Plan (CHP) that describes: Standard operating procedures for using hazardous chemicals; hazard-control techniques; equipment-reliability measures; worker information-and-training programs; conditions under which the employer must approve operations, procedures, and activities before implementation; and medical consultations and examinations. The CHP also designates personnel responsible for implementing the CHP, and specifies the procedures used to provide additional protection to workers exposed to particularly hazardous chemicals.

Other information collection requirements of the Standard include: Documenting exposure monitoring results; notifying workers in writing of these results; presenting specified information and training to workers; establishing a medical surveillance program for overexposed workers; providing required information to the physician; obtaining the physician's written opinion on using proper respiratory equipment; and, establishing, maintaining, transferring, and disclosing exposure monitoring and medical records. These collection of information requirements, including the CHP, control worker overexposure to hazardous laboratory chemicals, thereby preventing serious illnesses and death among workers exposed to such chemicals.

II. Special Issues for Comment

OSHA has a particular interest in comments on the following issues:

- Whether the proposed information collection requirements are necessary for the proper performance of the Agency's functions to protect workers, including whether the information is useful;
- The accuracy of OSHA's estimate of the burden (time and costs) of the information collection requirements, including the validity of the methodology and assumptions used;
- The quality, utility, and clarity of the information collected; and
- Ways to minimize the burden on employers who must comply; for example, by using automated or other technological information collection and transmission techniques.

III. Proposed Actions

OSHA is proposing to extend the information collection requirements contained in the Occupational Exposure to Hazardous Chemicals in Laboratories Standard (29 CFR 1910.1450). The Agency is requesting to increase the existing burden hour estimate for the collection of information requirements in the Standard. In this regard, the Agency is requesting to adjust the current burden hour estimate from 281,419 hours to 293,706 hours.

Type of Review: Extension of currently approved collections.

Title: Occupational Exposure to Hazardous Chemicals in Laboratories.

OMB Number: 1218–0131.

Affected Public: Business or other for-profits.

Number of Respondents: 48,461.

Frequency: Varies from 3 minutes (.05 hour) to replace the safe practice manual to 1 hour to develop a new manual.

Total Responses: 948,634.

Average Time per Response: Annually; monthly, quarterly, semi-annually, on occasion

Estimated Total Burden Hours: 293,706

Estimated Cost (Operation and Maintenance): $41,271,276.

IV. Public Participation—Submission of Comments on This Notice and Internet Access to Comments and Submissions

You may submit comments in response to this document as follows: (1) Electronically at *http://www.regulations.gov,* which is the Federal eRulemaking Portal; (2) by facsimile; or (3) by hard copy. All comments, attachments, and other material must identify the Agency name and the OSHA docket number for this ICR (Docket No. OSHA–2011–0059). You may supplement electronic submissions by uploading document files electronically. If you wish to mail additional materials in reference to an electronic or a facsimile submission, you must submit them to the OSHA Docket Office (see the section of this notice titled **ADDRESSES**. The additional materials must clearly identify your electronic comments by your name, date, and docket number so the Agency can attach them to your comments.

Because of security procedures, the use of regular mail may cause a significant delay in the receipt of comments. For information about security procedures concerning the delivery of materials by hand, express delivery, messenger or courier service, please contact the OSHA Docket Office at (202) 693–2350 (TTY (877) 889–5627).

Comments and submissions are posted without change at *http://www.regulations.gov.* Therefore, OSHA cautions commenters about submitting personal information such as Social Security Numbers and date of birth. Although all submissions are listed in the *http://www.regulations.gov* index, some information (*e.g.,* copyrighted material) is not publicly available to read or download through this Web site. All submissions, including copyrighted material, are available for inspection and copying at the OSHA Docket Office. Information on using the *http://www.regulations.gov* Web site to submit comments and access the docket is available at the Web site's "User Tips" link. Contact the OSHA Docket Office for information about materials not available through the Web site, and for assistance in using the Internet to locate docket submissions.

V. Authority and Signature

David Michaels, PhD, MPH, Assistant Secretary of Labor for Occupational Safety and Health, directed the preparation of this notice. The authority for this notice is the Paperwork Reduction Act of 1995 (44 U.S.C. 3506 *et seq.*) and Secretary of Labor's Order No. 5–2010 (75 FR 55355).

Signed at Washington, DC, on April 28, 2011.

David Michaels,

Assistant Secretary of Labor for Occupational Safety and Health.

[FR Doc. 2011–10810 Filed 5–3–11; 8:45 am]

BILLING CODE 4510–26–P

THE NATIONAL FOUNDATION ON THE ARTS AND THE HUMANITIES

Federal Council on the Arts and the Humanities

Arts and Artifacts Indemnity Panel Advisory; Committee

AGENCY: The National Endowment for the Humanities.

ACTION: Notice of meeting.

Pursuant to the provisions of the Federal Advisory Committee Act (Pub. L. 92–463 as amended) notice is hereby given that a meeting of the Arts and Artifacts Indemnity Panel of the Federal Council on the Arts and the Humanities will be held at 1100 Pennsylvania Avenue, NW., Washington, DC 20506, in Room 730, from 9:30 a.m. to 5 p.m., on Thursday, May 26, 2011.

The purpose of the meeting is to review applications for Certificates of Indemnity submitted to the Federal Council on the Arts and the Humanities for exhibitions beginning after July 1, 2011.

Because the proposed meeting will consider financial and commercial data and because it is important to keep values of objects, methods of transportation and security measures confidential, pursuant to the authority granted me by the Chairman's Delegation of Authority to Close Advisory Committee Meetings, dated July 19, 1993, I have determined that the meeting would fall within exemption (4) of 5 U.S.C. 552(b) and that it is essential to close the meeting to protect the free exchange of views and to avoid interference with the operations of the Committee.

It is suggested that those desiring more specific information contact Advisory Committee Management Officer, Michael McDonald, 1100 Pennsylvania Avenue, NW., Washington, DC 20506, or call 202/606–8322.

Michael P. McDonald,

Management Officer, Advisory Committee.

[FR Doc. 2011–10789 Filed 5–3–11; 8:45 am]

BILLING CODE 7536–01–P

NATIONAL LABOR RELATIONS BOARD

Sunshine Act Meetings: May 2011

TIME AND DATES: All meetings are held at 2:30 p.m.

Tuesday, May 3; Wednesday, May 4; Thursday, May 5; Tuesday, May 10; Wednesday, May 11;Thursday, May 12; Tuesday, May 17; Wednesday, May 18; Thursday, May 19; Tuesday, May 24; Wednesday, May 25; Thursday, May 26; Tuesday, May 31.

PLACE: Board Agenda Room, No. 11820, 1099 14th St., NW., Washington DC 20570.

STATUS: Closed.

MATTERS TO BE CONSIDERED: Pursuant to § 102.139(a) of the Board's Rules and Regulations, the Board or a panel thereof will consider "the issuance of a subpoena, the Board's participation in a civil action or proceeding or an arbitration, or the initiation, conduct, or disposition * * * of particular representation or unfair labor practice proceedings under section 8, 9, or 10 of the [National Labor Relations] Act, or any court proceedings collateral or ancillary thereto." See also 5 U.S.C. 552b(c)(10).

CONTACT PERSON FOR MORE INFORMATION: *Lester A. Heltzer,* Executive Secretary, (202) 273–1067.

Dated: May 2, 2011.

Lester A. Heltzer,

Executive Secretary.

[FR Doc. 2011–10992 Filed 5–2–11; 4:15 pm]

BILLING CODE 7545–01–P

NUCLEAR REGULATORY COMMISSION

[Docket Nos. 50–277 and 50–278; NRC–2011–0101]

Exelon Generation Company, LLC; PSEG Nuclear, LLC; Peach Bottom Atomic Power Station, Units 2 and 3; Notice of Withdrawal of Application for Amendment to Facility Operating License

The U.S. Nuclear Regulatory Commission (NRC or the Commission) has granted the request of Exelon Generation Company, LLC, (Exelon) and

PSEG Nuclear, LLC, to withdraw its application dated March 24, 2010, as supplemented by letters dated July 23, 2010, and January 20, 2011, for proposed amendment to Facility Operating License Nos. DPR–44 and DPR–56 for the Peach Bottom Atomic Power Station (PBAPS), Units 2 and 3, located in York and Lancaster Counties, Pennsylvania.

The proposed amendment would have revised technical specification Section 3.1.7, "Standby Liquid Control (SLC) System," to extend the completion time from 8 hours to 24 hours for specific conditions where two SLC subsystems are inoperable.

The Commission had previously issued a Notice of Consideration of Issuance of Amendment published in the **Federal Register** on December 14, 2010 (75 FR 77913). However, by letter dated April 26, 2011, the licensee withdrew the proposed change.

For further details with respect to this action, see the application for amendment dated March 24, 2010, as supplemented by letters dated July 23, 2010, and January 20, 2011, and the licensee's letter dated April 26, 2011, which withdrew the application for license amendment. Documents may be examined, and/or copied for a fee, at the NRC's Public Document Room (PDR), located at One White Flint North, Public File Area O1 F21, 11555 Rockville Pike (first floor), Rockville, Maryland. Publicly available records will be accessible electronically from the Agencywide Documents Access and Management System (ADAMS) Public Electronic Reading Room on the Internet at the NRC Web site, *http://www.nrc.gov/reading-rm/adams.html*. Persons who do not have access to ADAMS or who encounter problems in accessing the documents located in ADAMS should contact the NRC PDR Reference staff by telephone at 1–800–397–4209, or 301–415–4737 or by e-mail to *pdr.resource@nrc.gov*.

Dated at Rockville, Maryland this 28th day of April 2011.

For the Nuclear Regulatory Commission.

John D. Hughey,

Project Manager, Plant Licensing Branch LPL1–2, Division of Operating Reactor Licensing, Office of Nuclear Reactor Regulation.

[FR Doc. 2011–10872 Filed 5–3–11; 8:45 am]

BILLING CODE 7590–01–P

PEACE CORPS

Proposed Information Collection

ACTION: 60-Day notice and request for comments.

SUMMARY: The Peace Corps will submit the following information collection request to the Office of Management and Budget (OMB) for approval of reinstatement, without change of a previously approved collection which has expired. In compliance with the Paperwork Reduction Act of 1995 (44 U.S.C. Chapter 35), the Peace Corps invites the general public to comment on this request for approval of reinstatement, without change of a previously approved collection which has expired. This process is conducted in accordance with 5 CFR 1320.10.

DATES: Comments must be submitted on or before July 5, 2011.

ADDRESSES: Comments should be addressed to Denora Miller, FOIA Officer, Peace Corps, 1111 20th Street, NW., Washington, DC 20526. Denora Miller can be contacted by telephone at 202–692–1236 or e-mail at *pcfr@peacecorps.gov*. E-mail comments must be made in text and not in attachments.

FOR FURTHER INFORMATION CONTACT: Denora Miller at Peace Corps address above.

SUPPLEMENTARY INFORMATION:

OMB Control Number: 0420–0537.

Title: Fellows/USA Program Improvement Survey.

Type of Request: Reinstatement, without change, of a previously approved collection which has expired.

Respondents: 1,000.

Respondents Obligation to Reply: Returned Peace Corps Volunteers.

Burden to the Public:

a. *Estimated annual number of respondents:* 1,000.

b. *Estimated average time to respond:* 7 minutes.

c. *Estimated total annual burden hours:* 117 hours.

d. *Frequency of response:* One time.

e. *Estimated cost to respondents:* $0.00.

General description of collection: The Peace Corps Fellows/USA provides opportunities for returned Peace Corps Volunteers to pursue graduate education while working in schools and underserved communities. The purpose of this information collection is to identify areas of the Fellows/USA program that need improvement and better meet the educational needs of inquirers. The survey seeks to discover the reasons why inquirers who have taken the time to contact the Peace Corps for information on the Fellows/USA program have not eventually enrolled.

Request for Comment: Peace Corps invites comments on whether the proposed collections of information are necessary for proper performance of the functions of the Peace Corps, including whether the information will have practical use; the accuracy of the agency's estimate of the burden of the proposed collection of information, including the validity of the information to be collected; and, ways to minimize the burden of the collection of information on those who are to respond, including through the use of automated collection techniques, when appropriate, and other forms of information technology.

This notice is issued in Washington, DC on May 2, 2011.

Garry W. Stanberry,

Deputy Associate Director, Management.

[FR Doc. 2011–10795 Filed 5–3–11; 8:45 am]

BILLING CODE 6051–01–P

OFFICE OF PERSONNEL MANAGEMENT

Submission for Review; Extension of Existing Information Collection; OMB Control Number 3206–0248, Application for Senior Administrative Law Judge (OPM Form 1655), and Geographic Preference Statement for Senior Administrative Law Judge Applicant (OPM Form 1655–A)

AGENCY: U.S. Office of Personnel Management.

ACTION: 60-Day Notice and request for comments.

SUMMARY: The Human Resources Solutions, U.S. Office of Personnel Management (OPM) offers the general public and other Federal agencies the opportunity to comment on a request to the Office of Management and Budget for an extension of an existing information collection (ICR) 3206–0248, OPM 1655, and OPM 1655–A. These forms are used by retired Administrative Law Judges seeking reemployment on a temporary and intermittent basis to complete hearings of one or more specified case(s) in accordance with the Administrative Procedures Act of 1946. As required by the Paperwork Reduction Act of 1995, (Pub. L. 104–13, 44 U.S.C. chapter 35) as amended by the Clinger-Cohen Act (Pub. L. 104–106), OPM is soliciting comments for this collection. The Office of Management and Budget is particularly interested in comments that:

1. Evaluate whether the proposed collection of information is necessary for the proper performance of the functions of the agency, including whether the information will have practical utility;

2. Evaluate the accuracy of the agency's estimate of the burden of the proposed collection of information, including the validity of the methodology and assumptions used;

3. Enhance the quality, utility, and clarity of the information to be collected; and

4. Minimize the burden of the collection of information on those who are to respond, including through the use of appropriate automated, electronic, mechanical, or other technological collection techniques or other forms of information technology, *e.g.,* permitting electronic submissions of responses.

DATES: Comments on this proposal will be accepted until July 5, 2011. This process is conducted in accordance with 5 CFR 1320.1.

ADDRESSES: Interested persons are invited to submit written comments on the proposed information collection to the U.S. Office of Personnel Management, Human Resources Solutions, Administrative Law Judge Program, Attention: Karyn D. Lusby, 1900 E Street NW., Room 2458, Washington, DC 20415.

FOR FURTHER INFORMATION CONTACT: A copy of this ICR, with applicable supporting documentation, may be obtained by contacting the U.S. Office of Personnel Management, Human Resources Solutions, Administrative Law Judge Program, Attention: Karyn D. Lusby, 1900 E Street NW., Room 2458, Washington, DC 20415

Analysis

Agency: Human Resources Solutions, U.S. Office of Personnel Management.

Title: Application for Senior Administrative Law Judge (OPM Form 1655), and *Geographic Preference Statement for Senior Administrative Law Judge Applicant* (OPM Form 1655–A).

OMB Number: 3206–0248.

OPM Forms 1655 and 1655–A Frequency: Annually.

Affected Public: Individuals.

OPM Form 1655 Number of Respondents: Approximately 100.

OPM Form 1655 Estimated Time Per Respondent: 30–45 Minutes.

OPM Form 1655 Burden Hours: 94 hours.

OPM Form 1655–A Number of Respondents: Approximately 150.

OPM Form 1655–A Estimated Time per Respondent: 15–25 Minutes.

OPM Form 1655–A Burden Hours: 67 hours.

Total Burden Hours: 161 hours.

U.S. Office of Personnel Management.

John Berry,

Director.

[FR Doc. 2011–10895 Filed 5–3–11; 8:45 am]

BILLING CODE 6325–43–P

OFFICE OF PERSONNEL MANAGEMENT

[RI 38–47]

Submission for Review: Information and Instructions on Your Reconsideration Rights

AGENCY: U.S. Office of Personnel Management.

ACTION: 30-Day Notice and request for comments.

SUMMARY: The Retirement Services, Office of Personnel Management (OPM) offers the general public and other Federal agencies the opportunity to comment on a revised information collection request (ICR) 3206–0237, Information and Instructions on Your Reconsideration Rights. As required by the Paperwork Reduction Act of 1995 (Pub. L. 104–13, 44 U.S.C. chapter 35) as amended by the Clinger-Cohen Act (Pub. L. 104–106), OPM is soliciting comments for this collection. The information collection was previously published in the **Federal Register** on December 17, 2010 at Volume 75 FR 79052 allowing for a 60-day public comment period. No comments were received for this information collection. The purpose of this notice is to allow an additional 30 days for public comments. The Office of Management and Budget is particularly interested in comments that:

1. Evaluate whether the proposed collection of information is necessary for the proper performance of functions of the agency, including whether the information will have practical utility;

2. Evaluate the accuracy of the agency's estimate of the burden of the proposed collection of information, including the validity of the methodology and assumptions used;

3. Enhance the quality, utility, and clarity of the information to be collected; and

4. Minimize the burden of the collection of information on those who are to respond, including through the use of appropriate automated, electronic, mechanical, or other technological collection techniques or other forms of information technology, e.g., permitting electronic submissions of responses.

DATES: Comments are encouraged and will be accepted until June 3, 2011. This process is conducted in accordance with 5 CFR 1320.1.

ADDRESSES: Interested persons are invited to submit written comments on the proposed information collection to Office of Information and Regulatory Affairs, Office of Management and Budget, 725 17th Street, NW., Washington, DC 20503, Attention: Desk Officer for the Office of Personnel Management or sent via electronic mail to *oira_submission@omb.eop.gov* or faxed to (202) 395–6974.

FOR FURTHER INFORMATION CONTACT: A copy of this ICR, with applicable supporting documentation, may be obtained by contacting the Office of Information and Regulatory Affairs, Office of Management and Budget, 725 17th Street, NW., Washington, DC 20503, *Attention:* Desk Officer for the Office of Personnel Management or sent via electronic mail to *oira_submission@omb.eop.gov* or faxed to (202) 395–6974.

SUPPLEMENTARY INFORMATION: RI 38–47 outlines the procedures required to request reconsideration of an initial OPM decision about Civil Service or Federal Employees retirement, Federal or Retired Federal Employees Health Benefits requests to enroll or change enrollment, or Federal Employees' Group Life Insurance coverage. This form lists the procedures and time periods required for requesting reconsideration.

Analysis

Agency: Retirement Operations, Retirement Services, Office of Personnel Management.

Title: Information and Instructions on Your Reconsideration Rights.

OMB Number: 3206–0237.

Frequency: On occasion.

Affected Public: Individuals or Households.

Number of Respondents: 3,100.

Estimated Time per Respondent: 45 minutes.

Total Burden Hours: 2,325.

U.S. Office of Personnel Management.

John Berry,

Director.

[FR Doc. 2011–10894 Filed 5–3–11; 8:45 am]

BILLING CODE 6325–38–P

POSTAL REGULATORY COMMISSION

Sunshine Act Meetings

TIME AND DATE: Thursday, May 19, 2011, at 11 a.m.

PLACE: Commission main conference room, 901 New York Avenue, NW., Suite 200, Washington, DC 20268–0001.

STATUS: Closed.

Matters To Be Considered

1. Discussion of contractual matters involving sensitive business information—lease-related negotiations.

2. Discussion of confidential personnel matters—personnel management.

CONTACT PERSON FOR MORE INFORMATION: Stephen L. Sharfman, General Counsel, Postal Regulatory Commission, 901 New York Avenue, NW., Suite 200, Washington, DC 20268–0001, at 202–789–6820 (for agenda-related inquiries).

Dated: May 2, 2011.

By the Commission.

Ruth Ann Abrams,

Acting Secretary.

[FR Doc. 2011–11022 Filed 5–2–11; 4:15 pm]

BILLING CODE 7710–FW–P

POSTAL REGULATORY COMMISSION

[Docket No. MT2009–4; Order No. 720]

Postal Service Market Test

AGENCY: Postal Regulatory Commission.

ACTION: Notice.

SUMMARY: The Commission is noticing a recently-filed Postal Service motion for a temporary extension of the Collaborative Logistics experimental market test, pending Commission action on anticipated request for permanent status. This document grants a one-month extension, appoints a public representative, and invites public comments.

DATES: *Comment deadline:* May 16, 2011.

ADDRESSES: Submit comments electronically via the Commission's Filing Online system at *http://www.prc.gov.* Those who cannot submit comments electronically should contact the person identified in the **FOR FURTHER INFORMATION CONTACT** section by telephone for advice on filing alternatives.

FOR FURTHER INFORMATION CONTACT: Stephen L. Sharfman, General Counsel, 202–789–6820 or *stephen.sharfman@prc.gov.*

SUPPLEMENTARY INFORMATION: On April 26, 2011, the United States Postal Service moved to temporarily extend its Collaborative Logistics market test under 39 U.S.C. 3641(d).[1] The Commission originally allowed a 2-year market test on May 7, 2009.[2] The impending expiration of the 2-year interval has prompted the Postal Service to request that the Commission grant an extension of its experimental product. A temporary extension is being sought until such time as the Commission rules on a Postal Service request to make the Collaborative Logistics offering a permanent one. Motion at 2. The Postal Service hopes to file such a request by September 2011.

The Postal Service recognizes that 39 U.S.C. 3641(d)(1) provides that "a market test shall not exceed 24 months." *Id.* However, it suggests that the statute also "clearly envisions cases where market tests could be extended…under section 3641(d)(2)." *Id.* While the Postal Service recognizes that section 3641(d)(2) requires requests for extension of market tests to be submitted 60 days before the completion of the maximum 2-year test period, and its requested extension does not satisfy that provision precisely, it seeks a waiver to enable the Postal Service to complete the smooth transitioning of the management of this product to a new functional group. *Id.* at 1. The Postal Service contends an extension "would not prejudice any party." *Id.* at 2.

The Commission will grant a 1-month extension of this market test, through June 6, 2011, to develop a record on which to evaluate the Motion.

The Postal Service is requested to submit additional information to explain more fully why it does not plan to file for permanent authority for 4 more months, and to provide a specific description of the justification for coordinating the test during that period. This information should be filed by May 5, 2011.

Interested persons may submit comments on the Postal Service's Motion for extension. These comments are due no later than May 16, 2011.

The Commission appoints Richard A. Oliver to serve as successor to the prior Public Representative in this docket.

It is ordered:

1. The Commission grants an extension until June 6, 2011, to the expiration date of the market test of Collaborative Logistics.

2. Pursuant to 39 U.S.C. 505, Richard A. Oliver is appointed to serve as officer of the Commission (Public Representative) to represent the interests of the general public in this proceeding.

3. The Postal Service shall supplement its Motion no later than May 5, 2011, as described in the body of this order.

4. Comments by interested persons are due no later than May 16, 2011.

5. The Secretary shall arrange for publication of this order in the **Federal Register**.

By the Commission.

Shoshana M. Grove,

Secretary.

[FR Doc. 2011–10815 Filed 5–3–11; 8:45 am]

BILLING CODE 7710–FW–P

[1] Motion of the United States Postal Service for Temporary Extension of Collaborative Logistics Market Test, April 26, 2011 (Motion).

[2] Order No. 211, Order Concerning Collaborative Logistics Market Test, May 7, 2009.

SECURITIES AND EXCHANGE COMMISSION

Proposed Collection; Comment Request

Upon Written Request, Copies Available From: U.S. Securities and Exchange Commission, Office of Investor Education and Advocacy, Washington, DC 20549–0213.

Rule 15b6–1 and Form BDW; OMB Control No. 3235–0018; SEC File No. 270–17.

Notice is hereby given that pursuant to the Paperwork Reduction Act of 1995 (44 U.S.C. 3501 *et seq.*) the Securities and Exchange Commission ("Commission") has submitted to the Office of Management and Budget a request to revise the collection of information discussed below. The Code of Federal Regulations citation to this collection of information is 17 CFR 240.15b6–1.

Registered broker-dealers use Form BDW (17 CFR 249.501a) to withdraw from registration with the Commission, the self-regulatory organizations, and the states. On average, the Commission estimates that it would take a broker-dealer approximately one hour to complete and file a Form BDW to withdraw from Commission registration as required by Rule 15b6–1. The Commission estimates that approximately 515 broker-dealers withdraw from Commission registration annually[1] and, therefore, file a Form BDW via the Internet with *Web CRD,* a computer system operated by the Financial Industry Regulatory Authority, Inc. that maintains

[1] This estimate is based on Form BDW data collected over the past three years. In fiscal year (from 10/1 through 9/30) 2008, 503 broker-dealers withdrew from registration. In fiscal year 2009, 533 broker-dealers withdrew from registration. In fiscal year 2010, 510 broker-dealers withdrew from registration. (503 + 533 + 510)/3 = 515.

information regarding registered broker-dealers and their registered personnel. Therefore, the 515 broker-dealers that withdraw from registration by filing Form BDW would incur an aggregate annual reporting burden of approximately 515 hours.[2]

Written comments are invited on: (a) Whether the proposed collection of information is necessary for the proper performance of the functions of the Commission, including whether the information shall have practical utility; (b) the accuracy of the Commission's estimates of the burden of the proposed collection of information; (c) ways to enhance the quality, utility, and clarity of the information to be collected; and (d) ways to minimize the burden of the collection of information on respondents, including through the use of automated collection techniques or other forms of information technology. Consideration will be given to comments and suggestions submitted in writing within 60 days of this publication.

The Commission may not conduct or sponsor a collection of information unless it displays a currently valid control number. No person shall be subject to any penalty for failing to comply with a collection of information subject to the PRA that does not display a valid Office of Management and Budget (OMB) control number.

Please direct your written comments to: Thomas Bayer, Chief Information Officer, Securities and Exchange Commission, c/o Remi Pavlik-Simon, 6432 General Green Way, Alexandria, VA 22312 or send an e-mail to: *PRA_Mailbox@sec.gov.*

Dated: April 28, 2011.

Cathy H. Ahn,

Deputy Secretary.

[FR Doc. 2011–10852 Filed 5–3–11; 8:45 am]

BILLING CODE 8011–01–P

[2] (515 × 1 hour) = 515 hours.

SECURITIES AND EXCHANGE COMMISSION

[Release No. 34–64355; File No. SR–SCCP–2011–02]

Self-Regulatory Organizations; The Stock Clearing Corporation of Philadelphia; Notice of Filing and Immediate Effectiveness of Proposed Rule Change Relating to Amendments to the By-Laws of Its Parent Corporation, The NASDAQ OMX Group, Inc.

April 27, 2011.

Pursuant to Section 19(b)(1) of the Securities Exchange Act of 1934 ("Act"),[1] notice is hereby given that on April 14, 2011, the Stock Clearing Corporation of Philadelphia ("SCCP") filed with the Securities and Exchange Commission ("Commission") the proposed rule change described in Items I, II, and III below, which Items have been prepared primarily by SCCP. SCCP filed the proposal pursuant to Section 19(b)(3)(A)(iii) of the Act[2] and Rule 19b–4(f)(6)[3] thereunder so that the proposal was effective upon filing with the Commission. The Commission is publishing this notice to solicit comments on the rule change from interested parties.

I. Self-Regulatory Organization's Statement of the Terms of Substance of the Proposed Rule Change

The proposed rule change relate to amendments to the By-Laws of SCCP's parent corporation, The NASDAQ OMX Group, Inc. ("NASDAQ OMX").

II. Self-Regulatory Organization's Statement of the Purpose of, and Statutory Basis for, the Proposed Rule Change

In its filing with the Commission, SCCP included statements concerning the purpose of and basis for the proposed rule change and discussed any comments it received on the proposed rule change. The text of these statements may be examined at the places specified in Item IV below. SCCP has prepared summaries, set forth in sections (A), (B), and (C) below, of the most significant aspects of these statements.[4]

[1] 15 U.S.C. 78s(b)(1).

[2] 15 U.S.C. 78s(b)(3)(A)(iii).

[3] 17 CFR 240.19b–4(f)(6).

[4] The Commission has modified the text of the summaries prepared by SCCP.

(A) Self-Regulatory Organization's Statement of the Purpose of, and Statutory Basis for, the Proposed Rule Change

NASDAQ OMX recently made certain clarifying amendments to its By-Laws.[5] Specifically, the recently approved NASDAQ OMX rule change: (i) Amended the name of the Nominating Committee to the Nominating & Governance Committee; (ii) amended the NASDAQ OMX PHLX, Inc. reference to reflect a recent conversion to a limited liability company; and (iii) clarified By-Law Article IV, Section 4.4 that broker nonvotes are not counted as a vote cast either "for" or "against" a director in an uncontested election.[6]

NASDAQ OMX By-Laws previously provided for a Nominating Committee, which is appointed pursuant to the By-Laws. In addition to the responsibilities listed in By-Law Article IV, Section 4.13(h), the Nominating Committee also conducts certain governance functions such as consulting with the Board of Directors ("Board") and the management to determine the characteristics, skills, and experience desired for the Board as a whole and for its individual members, overseeing the annual director evaluation, and reviewing the overall effectiveness of the Board. Accordingly, NASDAQ OMX renamed and changed all references to the "Nominating Committee" in the By-Laws, to the "Nominating & Governance Committee" so that the title of the committee accurately reflects all of its current functions, including those that are deemed governance functions. The proposal to rename the Nominating Committee did not change the function of the committee but was intended to clarify the current functions and its governance role with respect to the Board selection process.

Additionally, NASDAQ OMX amended Article 1, Section (o) of NASDAQ OMX's By-Laws to change the reference to "NASDAQ OMX PHLX, Inc." to "NASDAQ OMX PHLX LLC" to reflect a recently filed rule change to convert NASDAQ OMX PHLX, Inc. from a Delaware corporation to a Delaware limited liability company.[7]

Finally, NASDAQ OMX added the words "and broker nonvotes" to NASDAQ OMX's By-Law Article IV,

[5] Securities Exchange Act Release No. 34–64285 (April 8, 2011) 76 FR 21085 (April 14, 2011) (File No. SR–NASDAQ–2011–025) ("Approval Order"). SR–NASDAQ–2011–025 was filed by NASDAQ Stock Market LLC on behalf of NASDAQ OMX to amend the By-Laws of its parent corporation.

[6] *Id.*

[7] Securities Exchange Act Release No. 34–62783 (August 27, 2010), 75 FR 54204 (September 3, 2010) (File No. SR–Phlx–2010–104).

Section 4.4 to make clear that broker nonvotes will not be counted as votes cast either "for" or "against" that director's election. In its filing to amend NASDAQ OMX's By-Laws, NASDAQ Stock Market LLC noted that NASDAQ OMX's past practice has been to not count a broker nonvote as a vote cast either for or against a director's election.[8] Accordingly, this change clarifies this practice by codifying it into the By-Laws, especially in light of NASDAQ OMX's recent change to a majority vote standard in the uncontested election of directors.

In 2010, NASDAQ OMX amended its By-Laws to state that in an uncontested election, a majority voting standard would apply to the election of its directors, requiring directors to be elected by the holders of a majority of the votes cast at any meeting for the election of directors at which a quorum is present in an uncontested election.[9] A plurality standard would still remain in a contested election. While in its filing to amend NASDAQ OMX's By-Laws, NASDAQ Stock Market LLC noted that it has always been NASDAQ OMX's practice to not count broker nonvotes "for" or "against" in director elections, the Commission noted in its Approval Order that the impact of the broker nonvote and how such votes are counted will take on added significance under NASDAQ OMX's newly adopted majority vote standard for director elections. Although in its filing NASDAQ Stock Market LLC stated that under Delaware case law,[10] broker nonvotes are not considered as votes cast for or against a proposal or director nominee, SCCP proposes the change for clarity and transparency purposes.

SCCP believes that the proposed rule change is consistent with the provisions of Section 6 of the Act,[11] in general, and with Sections 6(b)(1) and 6(b)(5) of the Act,[12] in particular, in that the proposal enables SCCP to be so organized as to have the capacity to be able to carry out the purposes of the Act, the rules and regulations thereunder, and self-regulatory organization rules, and is designed to prevent fraudulent and manipulative acts and practices, to promote just and equitable principles of trade, to foster cooperation and coordination with persons engaged in regulating, clearing, settling, processing information with respect to, and facilitating transactions in securities, to remove impediments to and perfect the mechanism of a free and open market and a national market system, and, in general, to protect investors and the public interest.

SCCP believes that changing the name of the Nominating Committee to the Nominating and Governance Committee and amending references to an exchange name to reflect a corporate change to a limited liability company are both clarifying in nature. The changes will ensure that the committee's title accurately reflects its functions and will ensure that the By-Laws accurately and properly reflect an exchange entity name. As discussed above, the amendment that broker nonvotes will not be counted as a vote either "for" or "against" in director elections will codify NASDAQ OMX's past practice, providing clarity and transparency. Accordingly SCCP believes that the amendments are consistent with investor protection and the public interest.

(B) Self-Regulatory Organization's Statement on Burden on Competition

SCCP does not believe that the proposed rule change will have any impact or impose any burden on competition.

(C) Self-Regulatory Organization's Statement on Comments on the Proposed Rule Change Received From Members, Participants, or Others

Written comments relating to the proposed rule change have not been solicited or received. SCCP will notify the Commission of any written comments received by SCCP.

III. Date of Effectiveness of the Proposed Rule Change and Timing for Commission Action

The foregoing proposed rule change has become effective upon filing pursuant to Section 19(b)(3)(A)(iii) of the Act[13] and Rule 19b–4(f)(6)[14] thereunder because the proposed rule change does not: (i) Significantly affect the protection of investors or the public interest; (ii) impose any significant burden on competition; and (iii) become operative for 30 days after the date of the filing, or such shorter time as the Commission may designate. At any time within 60 days of the filing of the proposed rule change, the Commission summarily may temporarily suspend such rule change if it appears to the Commission that such action is necessary or appropriate in the public interest, for the protection of investors, or otherwise in furtherance of the purposes of the Act. If the Commission takes such action, the Commission shall institute proceedings to determine whether the proposed rule should be approved or disapproved.

IV. Solicitation of Comments

Interested persons are invited to submit written data, views, and arguments concerning the foregoing, including whether the proposed rule change is consistent with the Act. Comments may be submitted by any of the following methods:

Electronic Comments

- Use the Commission's Internet comment form (*http://www.sec.gov/rules/sro.shtml*); or
- Send an e-mail to *rule-comments@sec.gov*. Please include File Number SR–SCCP–2011–002 on the subject line.

Paper Comments

- Send paper comments in triplicate to Elizabeth M. Murphy, Secretary, Securities and Exchange Commission, 100 F Street, NE., Washington, DC 20549–1090.

All submissions should refer to File Number SR–SCCP–2011–002. This file number should be included on the subject line if e-mail is used. To help the Commission process and review your comments more efficiently, please use only one method. The Commission will post all comments on the Commission's Internet Web site (*http://www.sec.gov/rules/sro.shtml*). Copies of the submission, all subsequent amendments, all written statements with respect to the proposed rule change that are filed with the Commission, and all written communications relating to the proposed rule change between the Commission and any person, other than those that may be withheld from the public in accordance with the provisions of 5 U.S.C. 552, will be available for Web site viewing and printing in the Commission's Public Reference Room, 100 F Street, NE., Washington, DC 20549, on official business days between the hours of 10 a.m. and 3 p.m. Copies of such filings also will be available for inspection and copying at the principal office of SCCP and on SCCP's Web site at *http://*

[8] Securities Exchange Act Release No. 34–63925 (February 17, 2011), 76 FR 10418 (February 24, 2011) (File No. SR–NASDAQ–2011–025).

[9] Securities Exchange Act Release No. 34–61786 (April 8, 2010), 75 FR 19436 (April 14, 2010) (File No. SR–NASDAQ–2010–025).

[10] *Berlin* v. *Emerald Partners,* 552 A.2d 482 494 (Del Supr. 1988).

[11] 15 U.S.C. 78f.

[12] 15 U.S.C. 78f(b)(1), (5).

[13] 15 U.S.C. 78s(b)(3)(A)(iii).

[14] 17 CFR 240.19b–4(f)(6). In addition, Rule 19b–4(f)(6) requires a self-regulatory organization to give the Commission written notice of its intent to file the proposed rule change at least five business days prior to the date of filing of the proposed rule change, or such shorter time as designated by the Commission. NASDAQ OMX PHLX LLC has satisfied this requirement.

nasdaqomxphlx.cchwallstreet.com/NASDAQOMXPHLX/pdf/sccp-filings/2011/SR-SCCP-2011-02.pdf.

All comments received will be posted without change; the Commission does not edit personal identifying information from submissions. You should submit only information that you wish to make available publicly. All submissions should refer to File Number SR–SCCP–2011–02 and should be submitted on or before May 25, 2011.

For the Commission by the Division of Trading and Markets, pursuant to delegated authority.[15]

Cathy H. Ahn,

Deputy Secretary.

[FR Doc. 2011–10854 Filed 5–3–11; 8:45 am]

BILLING CODE 8011–01–P

[15] 17 CFR 200.30–3(a)(12).

SECURITIES AND EXCHANGE COMMISSION

[Release No. 34–64365; File No. SR–NASDAQ–2011–058]

Self-Regulatory Organizations; The NASDAQ Stock Market LLC; Notice of Filing and Immediate Effectiveness of Proposed Rule Change Regarding Limitation of Liability

April 28, 2011.

Pursuant to Section 19(b)(1) of the Securities Exchange Act of 1934 ("Act"),[1] and Rule 19b–4 thereunder,[2] notice is hereby given that on April 28, 2011, The NASDAQ Stock Market LLC ("NASDAQ"), filed with the Securities and Exchange Commission ("SEC" or "Commission") the proposed rule change as described in Items I and II below, which Items have been substantially prepared by NASDAQ. The Commission is publishing this notice to solicit comments on the proposed rule change from interested persons.

I. Self-Regulatory Organization's Statement of the Terms of Substance of the Proposed Rule Change

NASDAQ is filing with the Securities and Exchange Commission ("SEC" or "Commission") a proposal for The NASDAQ Stock Market LLC ("NASDAQ" or "Exchange") to amend Rule 4626 (Limitation of Liability) regarding expansion of the Exchange's limitation of liability under specified circumstances.

The Exchange requests that the Commission waive the 30-day operative delay period contained in Exchange Act Rule 19b–4(f)(6)(iii).[3]

The text of the proposed rule change is available from NASDAQ's Web site at *http://nasdaq.cchwallstreet.com/Filings/,* at NASDAQ's principal office, and at the Commission's Public Reference Room.

II. Self-Regulatory Organization's Statement of the Purpose of, and Statutory Basis for, the Proposed Rule Change

In its filing with the Commission, NASDAQ included statements concerning the purpose of and basis for the proposed rule change and discussed any comments it received on the proposed rule change. The text of these statements may be examined at the places specified in Item IV below. NASDAQ has prepared summaries, set forth in sections A, B, and C below, of the most significant aspects of such statements.

A. Self-Regulatory Organization's Statement of the Purpose of, and Statutory Basis for, the Proposed Rule Change

1. Purpose

The purpose of this proposed rule change is to amend Rule 4626 regarding expansion of the Exchange's limitation of liability rule under specified circumstances.

Rule 4626 currently states that except as provided for in subsection (b) of the rule, Nasdaq and its affiliates shall not be liable for any losses, damages, or other claims arising out of the Nasdaq Market Center or its use. Subsection (b)(1) states that for the aggregate of all claims made by all market participants related to the use of the Nasdaq Market Center during a single calendar month, Nasdaq's payments under Rule 4676 [sic] shall not exceed the larger of $500,000, or the amount of the recovery obtained by Nasdaq under any applicable insurance policy.[4]

The Exchange now proposes to add a new section to expand the maximum amount of payments that the Exchange may make during a calendar month pursuant to Rule 4626 in enumerated circumstances added in new subsection (b)(2).

First, the (b)(2) claims have to be related to a systems malfunction or error of the Nasdaq Market Center concerning one the following functions that are system enforced by the Nasdaq trading system on behalf of the claimant: locked/crossed markets, trade through protection, market maker quoting, order protection, or firm quote compliance.[5] And second, Nasdaq has to determine in its sole discretion that such systems malfunction or error was caused exclusively by Nasdaq's trading system and that no outside factors contributed to the malfunction or error. That is, the trading system issue would have to be caused exclusively by the Exchange to trigger subsection (b)(2).[6]

For example, if the needed market data provided to the Exchange to properly perform a locked/crossed markets analysis was incorrect and therefore caused the Exchange's relevant trading system functionality to quote or execute improperly, the requirements of subsection (b)(2) would not be met because any resulting issue was not caused exclusively by the Exchange. A similar result would occur should any other third party or non-Exchange specific input to the Exchange's trading systems likewise cause incorrect processing by the Exchange.

Nasdaq's payments under subsection (b)(2) for all claims made by all market participants during a single calendar month, shall not exceed the larger of $3,000,000, or the amount of the recovery obtained by Nasdaq under any applicable insurance policy, subject to the overall cap on payments under Rule 4626 discussed below.

Finally, the Exchange proposes to add new subsection (b)(3) stating that Nasdaq's total payment during a single calendar month pursuant to Rule 4626 (including both subsections (b)(1) and (b)(2)) shall not exceed $3,000,000.[7]

2. Statutory Basis

The Exchange believes that its proposal is consistent with Section 6(b) of the Act[8] in general, and furthers the objectives of Section 6(b)(5) of the Act[9] in particular, in that it is designed to promote just and equitable principles of trade, to remove impediments to and

[1] 15 U.S.C. 78s(b)(1).

[2] 17 CFR 240.19b–4.

[3] 17 CFR 240.19b–4(f)(6)(iii).

[4] Rule 4676 [sic] was amended in 2009 to the current version. *See* Securities Exchange Act Release No. 60794 (October 6, 2009), 74 FR 52522 (October 13, 2009) (SR–NASDAQ–2009–084) (notice of filing and immediate effectiveness). The Commission notes that the references to "Rule 4676" herein are typographical errors and the correct rule number is 4626.

[5] Rule 610 and 611 of Regulation NMS and Exchange Rule 4613. Notwithstanding this provision, the Exchange notes that market participants are not absolved of their compliance obligations under the Exchange rules or the Act.

[6] Claims under subsection (b)(2) would remain subject to the other limitations for recovery contained in Rule 4672 [sic], including the limitations on covered losses contained in the introductory language of subsection (b).

[7] The Exchange proposes to add the word "payment" in subsection (b)(1) for consistency with proposed new subsections (b)(2) and (b)(3).

[8] 15 U.S.C. 78f(b).

[9] 15 U.S.C. 78f(b)(5).

perfect the mechanism of a free and open market and a national market system, and, in general to protect investors and the public interest.

The Exchange believes that its proposal to expand Rule 4626 (Limitation of Liability) under specified circumstances will promote fairness in the market place in situations where the firm's claim results from a problem in a compliance function performed by the Exchange's trading system that is solely the fault of the Exchange.[10]

B. Self-Regulatory Organization's Statement on Burden on Competition

NASDAQ does not believe that the proposed rule change will result in any burden on competition that is not necessary or appropriate in furtherance of the purposes of the Act.

C. Self-Regulatory Organization's Statement on Comments on the Proposed Rule Change Received From Members, Participants, or Others

Written comments were neither solicited nor received.

III. Date of Effectiveness of the Proposed Rule Change and Timing for Commission Action

Because the foregoing proposed rule change does not: (i) Significantly affect the protection of investors or the public interest; (ii) impose any significant burden on competition; and (iii) become operative for 30 days from the date on which it was filed, or such shorter time as the Commission may designate, it has become effective pursuant to Section 19(b)(3)(A) of the Act[11] and Rule 19b–4(f)(6)(iii) thereunder.[12] The Exchange has asked the Commission to waive the 30-day operative delay so that the proposal may become operative immediately upon filing. The Commission believes that waiving the 30-day operative delay is consistent with the protection of investors and the public interest because such waiver will allow the Exchange to immediately expand Rule 4626 to help promote fairness in the marketplace in specified circumstances where claims result from systems malfunctions or errors that are solely the fault of the Exchange.[13] Accordingly, the Commission waives the 30-day operative delay requirement and designates the proposed rule change as operative upon filing with the Commission.

At any time within 60 days of the filing of the proposed rule change, the Commission summarily may temporarily suspend such rule change if it appears to the Commission that such action is necessary or appropriate in the public interest, for the protection of investors, or otherwise in furtherance of the purposes of the Act.

IV. Solicitation of Comments

Interested persons are invited to submit written data, views, and arguments concerning the foregoing, including whether the proposed rule change is consistent with the Act. Comments may be submitted by any of the following methods:

Electronic Comments

- Use the Commission's Internet comment form (*http://www.sec.gov/rules/sro.shtml*); or
- Send an e-mail to *rule-comments@sec.gov*. Please include File Number SR–NASDAQ–2011–058 on the subject line.

Paper Comments

- Send paper comments in triplicate to Elizabeth M. Murphy, Secretary, Securities and Exchange Commission, 100 F Street, NE., Washington, DC 20549–1090.

All submissions should refer to File Number SR–NASDAQ–2011–058. This file number should be included on the subject line if e-mail is used. To help the Commission process and review your comments more efficiently, please use only one method. The Commission will post all comments on the Commission's Internet Web site (*http://www.sec.gov/rules/sro.shtml*). Copies of the submission, all subsequent amendments, all written statements with respect to the proposed rule change that are filed with the Commission, and all written communications relating to the proposed rule change between the Commission and any person, other than those that may be withheld from the public in accordance with the provisions of 5 U.S.C. 552, will be available for Web site viewing and printing in the Commission's Public Reference Room, 100 F Street, NE., Washington, DC 20549, on official business days between the hours of 10 a.m. and 3 p.m. Copies of such filing also will be available for inspection and copying at the principal office of the Exchange. All comments received will be posted without change; the Commission does not edit personal identifying information from submissions. You should submit only information that you wish to make publicly available. All submissions should refer to File Number SR–NASDAQ–2011–058 and should be submitted on or before May 25, 2011.

For the Commission, by the Division of Trading and Markets, pursuant to delegated authority.[14]

Cathy H. Ahn,

Deputy Secretary.

[FR Doc. 2011–10859 Filed 5–3–11; 8:45 am]

BILLING CODE 8011–01–P

[10] This would include events like the one on Monday, April 25, 2011 involving a quoting problem with the Exchange's automated quotation refresh system (AQR). Because the claim for redress for trades impacted by this AQR problem does not arise until settlement, claims timely filed from this event will be eligible for review pursuant to proposed Rule 4626(b)(2).

[11] 15 U.S.C. 78s(b)(3)(A).

[12] 17 CFR 240.19b–4(f)(6)(iii). In addition, Rule 19b–4(f)(6)(iii) requires that a self-regulatory organization submit to the Commission written notice of its intent to file the proposed rule change, along with a brief description and text of the proposed rule change, at least five business days prior to the filing of the proposed rule change, or such shorter time as designated by the Commission. The Exchange has requested that the Commission waive the five business day notice requirement. The Commission waives the five day notice requirement.

[13] For purposes only of waiving the 30-day operative delay, the Commission has considered the proposed rule's impact on efficiency, competition, and capital formation. *See* 15 U.S.C. 78c(f).

[14] 17 CFR 200.30–3(a)(12).

SECURITIES AND EXCHANGE COMMISSION

[Release No. 34–64364; File No. SR–FINRA–2011–012]

Self-Regulatory Organizations; Financial Industry Regulatory Authority, Inc.; Order Granting Approval of a Proposed Rule Change Relating to TRACE Reporting of Asset-Backed Securities

April 28, 2011.

I. Introduction

On March 3, 2011, the Financial Industry Regulatory Authority, Inc. ("FINRA") filed with the Securities and Exchange Commission ("Commission"), pursuant to Section 19(b)(1) of the Securities Exchange Act of 1934 (the "Act")[1] and Rule 19b–4 thereunder,[2] a proposed rule change related to Trade Reporting and Compliance Engine ("TRACE") reporting of Asset-Backed Securities. The proposed rule change was published for comment in the **Federal Register** on March 21, 2011.[3] The Commission received no comments on the proposal. This order approves the proposed rule change.

[1] 15 U.S.C. 78s(b)(1).

[2] 17 CFR 240.19b–4.

[3] *See* Securities Exchange Act Release No. 64084 (March 16, 2011), 76 FR 15352 ("Notice").

II. Description of the Proposal

In February 2010, the Commission approved FINRA's proposal to amend the FINRA Rule 6700 Series to define "Asset-Backed Securities" as TRACE–Eligible Securities, thereby subjecting members to the requirement to report transactions in such securities to TRACE.[4] The proposal is to become effective on May 16, 2011.[5] In the current proposed rule change, FINRA proposes additional amendments to the FINRA Rule 6700 Series and FINRA Rule 7730 to prepare for the reporting of Asset-Backed Securities transactions to TRACE. The proposed rule change amends or supplements the TRACE reporting and other requirements that will apply to Asset-Backed Securities transactions. Specifically, the proposed rule change would:

(1) In FINRA Rule 6710, clarify, simplify, or conform the defined terms "TRACE-Eligible Security," "Reportable TRACE Transaction," "Agency Debt Security," "Asset-Backed Security" and "TRACE System Hours"; add the defined term, "Securitizer"; and delete the defined terms "Sponsor" and "Issuing Entity";

(2) In FINRA Rule 6730, (A) revise, renumber, and conform the text of parallel reporting provisions in FINRA Rule 6730(a); (B) incorporate minor amendments regarding the duration and expiration of the pilot program for reporting Asset-Backed Securities transactions ("Pilot Program"); (C) consolidate reporting requirements for Asset-Backed Securities transactions that are executed other than during TRACE System Hours; (D) simplify how settlement is reported for Asset-Backed Securities transactions; (E) add alternative reporting requirements for Asset-Backed Securities transactions that are collateralized mortgage obligation ("CMO") or real estate mortgage investment conduit ("REMIC") transactions that occur prior to the issuance of the CMO or REMIC ("pre-issuance CMOs/REMICs"); and (F) add new FINRA Rule 6730(a)(6) to clarify a member's obligation to provide information to FINRA Operations regarding a TRACE-Eligible Security when such security is not in the TRACE system, and to incorporate other minor technical or clarifying amendments to the Rule;

(3) In FINRA Rule 6760, incorporate requirements that apply to Securitizers of Asset-Backed Securities, alternative notification requirements for pre-issuance CMOs/REMICs, and minor technical, conforming, or clarifying changes; and

(4) In FINRA Rule 7730, add the Financial Information eXchange ("FIX") as a method to report transactions to TRACE, establish a system-related FIX fee, and incorporate a minor technical amendment.

III. Discussion and Commission's Findings

After carefully considering the proposed rule change, the Commission finds that it is consistent with the requirements of the Act and the rules and regulations thereunder applicable to a national securities association.[6] In particular, the Commission finds that the proposal is consistent with Section 15A(b)(6) of the Act,[7] which requires, among other things, that FINRA rules must be designed to prevent fraudulent and manipulative acts and practices, to promote just and equitable principles of trade, and, in general, to protect investors and the public interest. The Commission believes that the proposal clarifies the standards for reporting Asset-Backed Securities, will assist FINRA by supporting more timely and accurate reporting to TRACE of transactions in Asset-Backed Securities and enhance FINRA's surveillance of the debt market in connection with Asset-Backed Securities transactions for the protection of investors and in furtherance of the public interest.

The Commission further finds that the proposal to add to Rule 7730 a fee for reporting transactions in Asset-Backed Securities via FIX is consistent with Section 15A(b)(5) of the Act, which requires, among other things, that FINRA rules provide for the equitable allocation of reasonable dues, fees, and other charges among members, issuers, and other persons using any facility or system that FINRA operates or controls.[8] The fee is similar to the Computer-to-Computer Interface ("CTCI") fee that currently is assessed to members that elect to report transactions in TRACE-Eligible Securities to TRACE via a CTCI line.

IV. Conclusion

It is therefore ordered, pursuant to Section 19(b)(2) of the Act,[9] that the proposed rule change (SR–FINRA–2011–012), be, and hereby is, approved.

For the Commission, by the Division of Trading and Markets, pursuant to delSegated authority.[10]

Cathy H. Ahn,

Deputy Secretary.

[FR Doc. 2011–10809 Filed 5–3–11; 8:45 am]

BILLING CODE 8011–01–P

SECURITIES AND EXCHANGE COMMISSION

[Release No. 34–64362; File No. SR–EDGA–2011–13]

Self-Regulatory Organizations; EDGA Exchange, Inc.; Notice of Filing and Immediate Effectiveness of Proposed Rule Change to Extend the Pilot Period of the Inbound Router, as described in EDGA Rule 2.12(b)

April 28, 2011.

Pursuant to Section 19(b)(1) of the Securities Exchange Act of 1934 ("Act"),[1] and Rule 19b–4 thereunder,[2] notice is hereby given that on April 20, 2011, EDGA Exchange, Inc. (the "Exchange" or "EDGA") filed with the Securities and Exchange Commission ("Commission") the proposed rule change as described in Items I, II, and III below, which Items have been prepared by the Exchange. The Commission is publishing this notice to solicit comments on the proposed rule change from interested persons.

I. Self-Regulatory Organization's Statement of the Terms of Substance of the Proposed Rule Change

The Exchange proposes to extend the pilot period of the Exchange's inbound router, as described in Rule 2.12(b), so that the Exchange can receive inbound routes of equities orders through DE Route, the Exchange's routing broker dealer, from EDGX Exchange, Inc. ("EDGX"). The text of the proposed rule change is attached as Exhibit 5 and is available on the Exchange's Web site at *http://www.directedge.com,* at the Exchange's principal office, and at the Public Reference Room of the Commission.

---

[4] *See* Securities Exchange Act Release No. 61566 (February 22, 2010), 75 FR 9262 (March 1, 2010). This proposed rule change also amended FINRA Rule 7730 to establish fees for reporting transactions in Asset-Backed Securities.

[5] *See* Securities Exchange Act Release No. 63223 (November 1, 2010), 75 FR 68654 (November 8, 2010) (Notice of Filing and Immediate Effectiveness of SR–FINRA–2010–054 to Extend the Implementation Period for SR–FINRA–2009–065); *Regulatory Notice* 10–55 (October 2010).

[6] In approving this proposal, the Commission has considered the proposed rule's impact on efficiency, competition, and capital formation. *See* 15 U.S.C. 78c(f).

[7] 15 U.S.C. 78o–3(b)(6).

[8] 15 U.S.C. 78o–3(b)(5).

[9] 15 U.S.C. 78s(b)(2).

[10] 17 CFR 200.30–3(a)(12).

[1] 15 U.S.C. 78s(b)(1).

[2] 17 CFR 240.19b–4.

II. Self-Regulatory Organization's Statement of the Purpose of, and Statutory Basis for, the Proposed Rule Change

In its filing with the Commission, the Exchange included statements concerning the purpose of, and basis for, the proposed rule change and discussed any comments it received on the proposed rule change. The text of these statements may be examined at the places specified in Item IV below. The self-regulatory organization has prepared summaries, set forth in Sections A, B and C below, of the most significant aspects of such statements.

A. Self-Regulatory Organization's Statement of the Purpose of, and the Statutory Basis for, the Proposed Rule Change

1. Purpose

Currently, Direct Edge ECN, LLC d/b/a DE Route ("DE Route") is the approved outbound order routing facility of EDGX. [3] The Exchange, through DE Route, has also been approved to receive inbound routes of equities orders by DE Route from EDGX. The Exchange's authority to receive inbound routes of equities orders by DE Route from EDGX is subject to a pilot period of twelve months, ending July 1, 2011. The Exchange hereby seeks to extend the previously approved pilot period (with the attendant obligations and conditions outlined in the Commission's Approval Order) for an additional twelve months, through June 30, 2012. This is reflected in the proposed amendment to EDGA Rule 2.12(b).

2. Statutory Basis

The statutory basis for the proposed rule change is Section 6(b)(5) of the Act,[4] which requires the rules of an exchange to promote just and equitable principles of trade, to remove impediments to and perfect the mechanism of a free and open market and a national market system, to foster cooperation and coordination with persons engaged in facilitating transactions in securities, and, in general, to protect investors and the public interest. Specifically, the proposed rule change will allow the Exchange to continue receiving inbound routes of equities orders from DE Route acting in its capacity as a facility of EDGX, in a manner consistent with prior approvals and established protections. The Exchange believes that extending the previously approved pilot period for twelve months will permit both the Exchange and the Commission to further assess the impact of the Exchange's authority to receive direct inbound routes of equities orders via DE Route, including the attendant obligations and conditions.

B. Self-Regulatory Organization's Statement on Burden on Competition

The proposed rule change does not impose any burden on competition that is not necessary or appropriate in furtherance of the purposes of the Act.

C. Self-Regulatory Organization's Statement on Comments on the Proposed Rule Change Received from Members, Participants, or Others

The Exchange has not solicited, and does not intend to solicit, comments on this proposed rule change. The Exchange has not received any unsolicited written comments from members or other interested parties.

III. Date of Effectiveness of the Proposed Rule Change and Timing for Commission Action

Because the foregoing proposed rule change does not: (i) Significantly affect the protection of investors or the public interest; (ii) impose any significant burden on competition; and (iii) become operative for 30 days from the date on which it was filed, or such shorter time as the Commission may designate, it has become effective pursuant to Section 19(b)(3)(A) of the Act [5] and Rule 19b–4(f)(6)(iii) thereunder.[6]

A proposed rule change filed under Rule 19b–4(f)(6) [7] normally does not become operative prior to 30 days after the date of the filing. However, pursuant to Rule 19b–4(f)(6)(iii),[8] the Commission may designate a shorter time if such action is consistent with the protection of investors and the public interest.

At any time within 60 days of the filing of the proposed rule change, the Commission summarily may temporarily suspend such rule change if it appears to the Commission that such action is necessary or appropriate in the public interest, for the protection of investors, or otherwise in furtherance of the purposes of the Act.

IV. Solicitation of Comments

Interested persons are invited to submit written data, views, and arguments concerning the foregoing, including whether the proposed rule change is consistent with the Act. Comments may be submitted by any of the following methods:

Electronic Comments

- Use the Commission's Internet comment form (*http://www.sec.gov/rules/sro.shtml);* or
- Send an e-mail to *rule-comments@sec.gov.* Please include File Number SR–EDGA–2011–13 on the subject line.

Paper Comments

- Send paper comments in triplicate to Elizabeth M. Murphy, Secretary, Securities and Exchange Commission, 100 F Street, NE., Washington, DC 20549–1090.

All submissions should refer to File Number SR–EDGA–2011–13. This file number should be included on the subject line if e-mail is used. To help the Commission process and review your comments more efficiently, please use only one method. The Commission will post all comments on the Commission's Internet Web site (*http://www.sec.gov/rules/sro.shtml*). Copies of the submission, all subsequent amendments, all written statements with respect to the proposed rule change that are filed with the Commission, and all written communications relating to the proposed rule change between the Commission and any person, other than those that may be withheld from the public in accordance with the provisions of 5 U.S.C. 552, will be available for Web site viewing and printing in the Commission's Public Reference Room, 100 F Street, NE., Washington, DC 20549, on official business days between the hours of 10 a.m. and 3 p.m.[9] Copies of the filing also will be available for inspection and copying at the principal office of the Exchange. All comments received will be posted without change; the Commission does not edit personal identifying information from submissions. You should submit only information that you wish to make available publicly. All submissions should refer to File Number SR–EDGA–2011–13 and should be submitted on or before May 25, 2011.

[3] *See* Securities Exchange Act Release No. 61698 (March 12, 2010), 75 FR 13151 (March 18, 2010) (hereinafter referred to as the "Commission's Approval Order").

[4] 15 U.S.C. 78f(b)(5).

[5] 15 U.S.C. 78s(b)(3)(A).

[6] 17 CFR 240.19b–4(f)(6)(iii).

[7] 17 CFR 240.19b–4(f)(6).

[8] 17 CFR 240.19b–4(f)(6)(iii).

[9] The text of the proposed rule change is available on the Commission's Web site at *http://www.sec.gov.*

For the Commission, by the Division of Trading and Markets, pursuant to delegated authority.[10]

Cathy H. Ahn,

Deputy Secretary.

[FR Doc. 2011–10808 Filed 5–3–11; 8:45 am]

BILLING CODE 8011–01–P

SECURITIES AND EXCHANGE COMMISSION

[Release No. 34–64361; File No. SR–EDGX–2011–12]

Self-Regulatory Organizations; EDGX Exchange, Inc.; Notice of Filing and Immediate Effectiveness of Proposed Rule Change To Extend the Pilot Period of the Inbound Router, as Described in EDGX Rule 2.12(b)

April 28, 2011.

Pursuant to Section 19(b)(1) of the Securities Exchange Act of 1934 ("Act"),[1] and Rule 19b–4 thereunder,[2] notice is hereby given that on April 20, 2011, EDGX Exchange, Inc. (the "Exchange" or "EDGX") filed with the Securities and Exchange Commission ("Commission") the proposed rule change as described in Items I, II, and III below, which Items have been prepared by the Exchange. The Commission is publishing this notice to solicit comments on the proposed rule change from interested persons.

I. Self-Regulatory Organization's Statement of the Terms of Substance of the Proposed Rule Change

The Exchange proposes to extend the pilot period of the Exchange's inbound router, as described in Rule 2.12(b), so that the Exchange can receive inbound routes of equities orders through DE Route, the Exchange's routing broker dealer, from EDGA Exchange, Inc. ("EDGA"). The text of the proposed rule change is attached as Exhibit 5 and is available on the Exchange's Web site at *http://www.directedge.com,* at the Exchange's principal office, and at the Public Reference Room of the Commission.

II. Self-Regulatory Organization's Statement of the Purpose of, and Statutory Basis for, the Proposed Rule Change

In its filing with the Commission, the Exchange included statements concerning the purpose of, and basis for, the proposed rule change and discussed any comments it received on the proposed rule change. The text of these statements may be examined at the places specified in Item IV below. The self-regulatory organization has prepared summaries, set forth in Sections A, B and C below, of the most significant aspects of such statements.

A. Self-Regulatory Organization's Statement of the Purpose of, and the Statutory Basis for, the Proposed Rule Change

1. Purpose

Currently, Direct Edge ECN, LLC d/b/a DE Route ("DE Route") is the approved outbound order routing facility of EDGA.[3] The Exchange, through DE Route, has also been approved to receive inbound routes of equities orders by DE Route from EDGA. The Exchange's authority to receive inbound routes of equities orders by DE Route from EDGA is subject to a pilot period of twelve months, ending July 1, 2011. The Exchange hereby seeks to extend the previously approved pilot period (with the attendant obligations and conditions outlined in the Commission's Approval Order) for an additional twelve months, through June 30, 2012. This is reflected in the proposed amendment to EDGX Rule 2.12(b).

2. Statutory Basis

The statutory basis for the proposed rule change is Section 6(b)(5) of the Act,[4] which requires the rules of an exchange to promote just and equitable principles of trade, to remove impediments to and perfect the mechanism of a free and open market and a national market system, to foster cooperation and coordination with persons engaged in facilitating transactions in securities, and, in general, to protect investors and the public interest. Specifically, the proposed rule change will allow the Exchange to continue receiving inbound routes of equities orders from DE Route acting in its capacity as a facility of EDGA, in a manner consistent with prior approvals and established protections. The Exchange believes that extending the previously approved pilot period for twelve months will permit both the Exchange and the Commission to further assess the impact of the Exchange's authority to receive direct inbound routes of equities orders via DE Route, including the attendant obligations and conditions.

B. Self-Regulatory Organization's Statement on Burden on Competition

The proposed rule change does not impose any burden on competition that is not necessary or appropriate in furtherance of the purposes of the Act.

C. Self-Regulatory Organization's Statement on Comments on the Proposed Rule Change Received From Members, Participants, or Others

The Exchange has not solicited, and does not intend to solicit, comments on this proposed rule change. The Exchange has not received any unsolicited written comments from members or other interested parties.

III. Date of Effectiveness of the Proposed Rule Change and Timing for Commission Action

Because the foregoing proposed rule change does not: (i) Significantly affect the protection of investors or the public interest; (ii) impose any significant burden on competition; and (iii) become operative for 30 days from the date on which it was filed, or such shorter time as the Commission may designate, it has become effective pursuant to Section 19(b)(3)(A) of the Act[5] and Rule 19b–4(f)(6)(iii) thereunder.[6]

A proposed rule change filed under Rule 19b–4(f)(6)[7] normally does not become operative prior to 30 days after the date of the filing. However, pursuant to Rule 19b–4(f)(6)(iii),[8] the Commission may designate a shorter time if such action is consistent with the protection of investors and the public interest.

At any time within 60 days of the filing of the proposed rule change, the Commission summarily may temporarily suspend such rule change if it appears to the Commission that such action is necessary or appropriate in the public interest, for the protection of investors, or otherwise in furtherance of the purposes of the Act.

IV. Solicitation of Comments

Interested persons are invited to submit written data, views, and arguments concerning the foregoing, including whether the proposed rule change is consistent with the Act. Comments may be submitted by any of the following methods:

Electronic Comments

- Use the Commission's Internet comment form (*http://www.sec.gov/rules/sro.shtml*); or

[10] 17 CFR 200.30–3(a)(12).

[1] 15 U.S.C. 78s(b)(1).

[2] 17 CFR 240.19b–4.

[3] *See* Securities Exchange Act Release No. 61698 (March 12, 2010), 75 FR 13151 (March 18, 2010) (hereinafter referred to as the "Commission's Approval Order").

[4] 15 U.S.C. 78f(b)(5).

[5] 15 U.S.C. 78s(b)(3)(A).

[6] 17 CFR 240.19b–4(f)(6)(iii).

[7] 17 CFR 240.19b–4(f)(6).

[8] 17 CFR 240.19b–4(f)(6)(iii).

• Send an e-mail to *rule-comments@sec.gov.* Please include File Number SR–EDGX–2011–12 on the subject line.

Paper Comments

• Send paper comments in triplicate to Elizabeth M. Murphy, Secretary, Securities and Exchange Commission, 100 F Street, NE., Washington, DC 20549–1090.

All submissions should refer to File Number SR–EDGX–2011–12. This file number should be included on the subject line if e-mail is used. To help the Commission process and review your comments more efficiently, please use only one method. The Commission will post all comments on the Commission's Internet Web site (*http://www.sec.gov/rules/sro.shtml*). Copies of the submission, all subsequent amendments, all written statements with respect to the proposed rule change that are filed with the Commission, and all written communications relating to the proposed rule change between the Commission and any person, other than those that may be withheld from the public in accordance with the provisions of 5 U.S.C. 552, will be available for Web site viewing and printing in the Commission's Public Reference Room, 100 F Street, NE., Washington, DC 20549, on official business days between the hours of 10 a.m. and 3 p.m.[9] Copies of the filing also will be available for inspection and copying at the principal office of the Exchange. All comments received will be posted without change; the Commission does not edit personal identifying information from submissions. You should submit only information that you wish to make available publicly. All submissions should refer to File Number SR–EDGX–2011–12 and should be submitted on or before May 25, 2011.

For the Commission, by the Division of Trading and Markets, pursuant to delegated authority.[10]

Cathy H. Ahn,

Deputy Secretary.

[FR Doc. 2011–10807 Filed 5–3–11; 8:45 am]

BILLING CODE 8011–01–P

[9] The text of the proposed rule change is available on the Commission's Web site at *http://www.sec.gov.*

[10] 17 CFR 200.30–3(a)(12).

SECURITIES AND EXCHANGE COMMISSION

[Release No. 34–64360; File No. SR–DTC–2011–05]

Self-Regulatory Organizations; The Depository Trust Company; Notice of Filing of Proposed Rule Change To Amend Rules Relating to the Memo Segregation Function

April 28, 2011.

Pursuant to Section 19(b)(1) of the Securities Exchange Act of 1934 ("Act")[1] and Rule 19b–4 thereunder[2] notice is hereby given that on April 15, 2011, The Depository Trust Company ("DTC") filed with the Securities and Exchange Commission ("Commission") the proposed rule change as described in Items I and II below, which Items have been prepared primarily by DTC.[3] The Commission is publishing this notice to solicit comments on the proposed rule change from interested persons.

I. Self-Regulatory Organization's Statement of the Terms of the Substance of the Proposed Rule Change

The purpose of this proposed rule change is to amend DTC's rules relating to its Memo Segregation Service to no longer permit stock loan or stock loan return-related turnaround deliveries for a security when there is a deficit in the Memo Segregation account.

II. Self-Regulatory Organization's Statement of the Purpose of, and Statutory Basis for, the Proposed Rule Change

In its filing with the Commission, DTC included statements concerning the purpose of and basis for the proposed rule change and discussed any comments it received on the proposed rule change. The text of these statements may be examined at the places specified in Item IV below. DTC has prepared summaries, set forth in sections (A), (B), and (C) below, of the most significant aspects of these statements.[4]

(A) Self-Regulatory Organization's Statement of the Purpose of, and Statutory Basis for, the Proposed Rule Change

Rule 15c3–3 ("Customer Protection Rule"), which was implemented by the Commission under the Act, requires, among other things, that broker-dealers maintain possession or control of fully-paid or excess margin securities they hold for the account of customers.[5] DTC's Memo Segregation Service ("MSEG") is an optional service which offers a mechanism for broker-dealer participants to protect fully-paid or excess margin securities by allowing the participant to shield from unintended delivery a designated quantity of securities that are in the participant's DTC free account or that may be received during the daily processing cycle. In this regard, the participant may set a "counter" for a specified minimum quantity of each security to be held in its account as a threshold to any redelivery intraday. When the counter for a security is greater than the inventory of the participant, MSEG will prevent the delivery of any quantity of the affected security out of the participant's account unless: (1) The delivery is a permitted delivery (*e.g.,* a free of value ACATS delivery or a "turnaround" as described below) or (2) the participant provides DTC with new instructions to reduce the MSEG counter.

The MSEG procedures currently support two optional "turnaround" MSEG indicators which enable participants to make deliveries for certain transaction types (including, but not limited to, stock loans and stock loan returns) from certain positions received intraday regardless of any MSEG-related deficit. Recently, DTC was advised by the Regulatory and Clearance Committee of the Securities Operations Section of SIFMA that several broker-dealer participants had expressed concern that their practices for turnaround of stock loans and stock loan returns (*i.e.,* MSEG overrides) may be deemed by FINRA to be contrary to the Customer Protection Rule. DTC also communicated directly with participants affected through their use of this functionality, and they expressed similar concerns. In order to accommodate its participants in this regard, DTC is therefore proposing to revise its procedures so that MSEG would no longer permit stock loan or stock loan return-related turnaround deliveries for a security when there is an MSEG deficit in the account.

In order to effect the proposed change described above, DTC will amend its Settlement Service Guide ("Service Guide"), which is incorporated into DTC's procedures, to make existing indicators that allow for the turnaround of stock loans and stock loan returns more restrictive. As a result, the

[1] 15 U.S.C. 78s(b)(1).

[2] 17 CFR 240.19b–4.

[3] The text of the proposed rule change is attached as Exhibit 5 to DTC's filing, which is available at *http://www.dtcc.com/downloads/legal/rule_filings/2010/dtc/2011-05.pdf.*

[4] The Commission has modified the text of the summaries prepared by DTC.

[5] 17 CFR 204.15c3–3.

procedures will no longer permit deliveries for stock loans (designated in the Service Guide as Reason Code 10), stock loan returns (Reason Code 20), The Options Clearing Corporation ("OCC") stock loans (reason code 260), OCC stock loan returns (reason code 270), American Depository Receipt ("ADR") stock loans (reason code 280), and ADR stock loan returns (reason code 290) to be completed from turnaround shares when an MSEG deficit exists.[6]

The proposed rule change is consistent with the requirements of the Securities Exchange Act of 1934, as amended, ("Act") and the rules and regulations thereunder applicable to DTC because it modifies a service of DTC so that it enables participants to better protect customer fully-paid and excess margin securities which are held at DTC and in general, protects investors and the public interest.

In addition, the proposed rule change is consistent with the CPSS–IOSCO Recommendations for securities settlement systems ("Recommendations"). Recommendation 12, "Protection of Customers' Securities," states, *in relevant part:* "Entities holding securities in custody should employ accounting practices and safekeeping procedures that fully protect customer's securities." Section 3.61 of this Recommendation includes the statement that "one way that a customer can be protected in the event of a custodian's insolvency is through segregation (identification) of customer securities on the books of the custodian (and of all subcustodians, and ultimately, the CSD [Central Securities Depository])." The term "custodian" in this context would refer to the participant and not to DTC as we, DTC, understand the Recommendations. DTC neither takes direct responsibility, as the CSD, for the designation of assets as customer assets nor is it required to do so by law or regulation. However, DTC accommodates the needs of its participants to segregate (identify) customer securities by identifying mechanisms such as MSEG. The MSEG proposal is, accordingly, consistent with this Recommendation to the extent it applies to DTC. The change will reduce the risk of unintended delivery by broker-dealer participants of customer securities, which might otherwise be deemed to be contrary to the Customer Protection Rule.

[6] The proposed change will also eliminate references in the Settlement Service Guide that MSEG-related functions are processed through the Participant Terminal System (PTS), as participants may currently use various platforms to communicate with DTC.

(B) Self-Regulatory Organization's Statement on Burden on Competition

DTC does not believe that the proposed rule change would impose any burden on competition.

(C) Self-Regulatory Organization's Statement on Comments on the Proposed Rule Change Received From Members, Participants or Others

Written comments relating to the proposed rule change have not been solicited or received. DTC will notify the Commission of any written comments received by DTC.

III. Date of Effectiveness of the Proposed Rule Change and Timing for Commission Action

Within forty-five days of the date of publication of this notice in the **Federal Register** or within such longer period (i) as the Commission may designate up to ninety days of such date if it finds such longer period to be appropriate and publishes its reasons for so finding or (ii) as to which the self-regulatory organization consents, the Commission will:

(A) By order approve or disapprove the proposed rule change or

(B) Institute proceedings to determine whether the proposed rule change should be disapproved.

IV. Solicitation of Comments

Interested persons are invited to submit written data, views, and arguments concerning the foregoing, including whether the proposed rule change is consistent with the Act. Comments may be submitted by any of the following methods:

Electronic Comments

- Use the Commission's Internet comment form (*http://www.sec.gov/rules/sro.shtml*) or
- Send an e-mail to *rule-comments@sec.gov.* Please include File Number SR–DTC–2011–05 on the subject line.

Paper Comments

- Send paper comments in triplicate to Elizabeth M. Murphy, Secretary, Securities and Exchange Commission, 100 F Street, NE., Washington, DC 20549–1090.

All submission should refer to File Number SR–DTC–2011–05. This file number should be included on the subject line if e-mail is used. To help the Commission process and review your comments more efficiently, please use only one method. The Commission will post all comments on the Commission's Internet Web site (*http://www.sec.gov/rules/sro.shtml*). Copies of the submission, all subsequent amendments, all written statements with respect to the proposed rule change that are filed with the Commission, and all written communications relating to the proposed rule change between the Commission and any person, other than those that may be withheld from the public in accordance with the provisions of 5 U.S.C. 552, will be available for Web site viewing and printing in the Commission's Public Reference Section, 100 F Street, NE., Washington, DC 20549–1090, on official business days between the hours of 10 a.m. and 3 p.m. Copies of such filings will also be available for inspection and copying at the principal office of DTC and on DTC's Web site at *http://www.dtcc.com/downloads/legal/rule_filings/2011/dtc/2011-05.pdf.* All comments received will be posted without change; the Commission does not edit personal identifying information from submissions. You should submit only information that you wish to make available publicly. All submissions should refer to File Number SR–DTC–2011–05 and should be submitted on or before May 25, 2011.

For the Commission by the Division of Trading and Markets, pursuant to delegated authority.[7]

Cathy H. Ahn,

Deputy Secretary.

[FR Doc. 2011–10806 Filed 5–3–11; 8:45 am]

BILLING CODE 8011–01–P

SECURITIES AND EXCHANGE COMMISSION

[Release No. 34–64359; File No. SR–ISE–2011–27]

Self-Regulatory Organizations; International Securities Exchange, LLC; Notice of Filing and Immediate Effectiveness of Proposed Rule Change To Permit the Listing of Series With $0.50 and $1 Strike Price Increments on Certain Options Used To Calculate Volatility Indexes

April 28, 2011.

Pursuant to Section 19(b)(1) of the Securities Exchange Act of 1934 ("Act")[1] and Rule 19b–4 thereunder,[2] notice is hereby given that, on April 26, 2011, the International Securities Exchange, LLC (the "Exchange" or "ISE") filed with the Securities and Exchange Commission (the "Commission") the proposed rule change as described in Items I and II below, which Items have

[7] 17 CFR 200.30–3(a)(12).

[1] 15 U.S.C. 78s(b)(1).

[2] 17 CFR 240.19b–4.

been prepared by the Exchange. The Commission is publishing this notice to solicit comments on the proposed rule change from interested persons.

I. Self-Regulatory Organization's Statement of the Terms of Substance of the Proposed Rule Change

The Exchange proposes to amend its rules to permit the listing of strike prices in $0.50 intervals where the strike price is less than $75, and strike prices in $1.00 intervals where the strike price is between $75 and $150 for option series used to calculate volatility indexes. The text of the proposed rule change is available on the Exchange's Web site *http://www.ise.com,* at the principal office of the Exchange, and at the Commission's Public Reference Room.

II. Self-Regulatory Organization's Statement of the Purpose of, and Statutory Basis for, the Proposed Rule Change

In its filing with the Commission, the Exchange included statements concerning the purpose of, and basis for, the proposed rule change and discussed any comments it received on the proposed rule change. The text of these statements may be examined at the places specified in Item IV below. The self-regulatory organization has prepared summaries, set forth in Sections A, B and C below, of the most significant aspects of such statements.

A. Self-Regulatory Organization's Statement of the Purpose of, and Statutory Basis for, the Proposed Rule Change

1. Purpose

The purpose of this proposed rule change is to permit the Exchange to list strike prices in $0.50 intervals where the strike price is less than $75, and strike prices in $1.00 intervals where the strike price is between $75 and $150 for option series used to calculate volatility indexes. This proposal is based on a recently filed rule change by NYSE Arca, Inc. ("NYSE Arca") and NYSE Amex LLC ("NYSE Amex").[3]

To effect this change, the Exchange is proposing to add new Supplementary Material .11 to ISE Rule 504. The new provision will permit the listing of strike prices in $0.50 intervals where the strike price is less than $75, and strike prices in $1.00 intervals where the strike price is between $75 and $150 for option series used to calculate volatility indexes.[4]

Volatility indexes are calculated and disseminated by the CBOE, which also list options on the resulting index. At this time, ISE has no intention of listing volatility options, and will not be selecting options in any equity securities, Exchange-Traded Fund Shares, Trust Issued Receipts, Exchange Traded Notes, Index-Linked Securities, or indexes to be the basis of a volatility index.

To the extent that the CBOE or another exchange selects a multiply listed product as the basis of a volatility index, proposed Supplementary Material .11 would permit ISE to list and compete in all series listed by the CBOE for purposes of calculating a volatility index.

ISE has analyzed its capacity and represents that it believes the Exchange and the Options Price Reporting Authority have the necessary systems capacity to handle the additional traffic associated with the listing of strike prices in $0.50 intervals where the strike price is less than $75, and strike prices in $1.00 intervals where the strike price is between $75 and $150 for option series used to calculate volatility indexes in securities selected by the CBOE.

2. Statutory Basis

The basis under the Securities Exchange Act of 1934 ("Exchange Act") for this proposed rule change is the requirement under Section 6(b)(5) that an exchange have rules that are designed to promote just and equitable principles of trade, and to remove impediments to and perfect the mechanism for a free and open market and a national market system, and in general, to protect investors and the public interest. In particular, the proposed rule change will allow the Exchange to offer a full range of all available option series in a given class, including those selected by other exchanges to be the basis of a volatility index. While this proposal will generate additional quote traffic, the Exchange does not believe that this increased traffic will become unmanageable since the proposal is restricted to a limited number of classes. Further, the Exchange does not believe that the proposal will result in a material proliferation of additional series because it is restricted to a limited number of classes.

B. Self-Regulatory Organization's Statement on Burden on Competition

The proposed rule change does not impose any burden on competition that is not necessary or appropriate in furtherance of the purposes of the Act.

C. Self-Regulatory Organization's Statement on Comments on the Proposed Rule Change Received From Members, Participants, or Others

The Exchange has not solicited, and does not intend to solicit, comments on this proposed rule change. The Exchange has not received any unsolicited written comments from members or other interested parties.

III. Date of Effectiveness of the Proposed Rule Change and Timing for Commission Action

Because the foregoing proposed rule change does not significantly affect the protection of investors or the public interest, does not impose any significant burden on competition, and, by its terms, does not become operative for 30 days from the date on which it was filed, or such shorter time as the Commission may designate, it has become effective pursuant to Section 19(b)(3)(A) of the Act[5] and Rule 19b-4(f)(6) thereunder.[6]

The Exchange has requested that the Commission waive the 30-day operative delay. The Commission believes that waiver of the operative delay is consistent with the protection of investors and the public interest because the proposal is substantially similar to that of another exchange that has been approved by the Commission.[7] Therefore, the Commission designates the proposal operative upon filing.[8]

At any time within 60 days of the filing of the proposed rule change, the Commission summarily may temporarily suspend such rule change if it appears to the Commission that such

[3] *See* SR–NYSEArca–2011–19 and SR–NYSEAmex-2011–26. In its filing, NYSE Arca and NYSE AMEX cite to the Commission's approval of a recent filing by the Chicago Board Options Exchange ("CBOE").

[4] For example, CBOE calculates the CBOE Gold ETF Volatility Index ("GVZ"), which is based on the VIX methodology applied to options on the SPDR Gold Trust ("GLD"). The current filing would permit $0.50 strike price intervals for GLD options where the strike price is $75 or less. ISE is currently permitted to list strike prices in $1 intervals for GLD options (where the strike price is $200 or less), as well as for other exchange-traded fund options. *See* ISE Rule 504.

[5] 15 U.S.C. 78s(b)(3)(A).

[6] 17 CFR 240.19b–4(f)(6). In addition, Rule 19b–4(f)(6)(iii) requires the Exchange to give the Commission written notice of the Exchange's intent to file the proposed rule change, along with a brief description and text of the proposed rule change, at least five business days prior to the date of filing of the proposed rule change, or such shorter time as designated by the Commission. The Exchange has satisfied the five-day prefiling requirement.

[7] *See* Exchange Act Release No. 64189 (April 5, 2011), 76 FR 20066 (April 11, 2011) (SR–CBOE–2011–008).

[8] For purposes only of waiving the 30-day operative delay, the Commission has considered the proposed rule's impact on efficiency, competition, and capital formation. *See* 15 U.S.C. 78c(f).

action is necessary or appropriate in the public interest, for the protection of investors, or otherwise in furtherance of the purposes of the Act.

IV. Solicitation of Comments

Interested persons are invited to submit written data, views, and arguments concerning the foregoing, including whether the proposed rule change is consistent with the Act. Comments may be submitted by any of the following methods:

Electronic Comments

- Use the Commission's Internet comment form (*http://www.sec.gov/rules/sro.shtml*); or
- Send an e-mail to *rule-comments@sec.gov.* Please include File Number SR–ISE–2011–27 on the subject line.

Paper Comments

- Send paper comments in triplicate to Elizabeth M. Murphy, Secretary, Securities and Exchange Commission, 100 F Street, NE., Washington, DC 20549–1090.

All submissions should refer to File Number SR–ISE–2011–27. This file number should be included on the subject line if e-mail is used. To help the Commission process and review your comments more efficiently, please use only one method. The Commission will post all comments on the Commission's Internet Web site (*http://www.sec.gov/rules/sro.shtml*). Copies of the submission, all subsequent amendments, all written statements with respect to the proposed rule change that are filed with the Commission, and all written communications relating to the proposed rule change between the Commission and any person, other than those that may be withheld from the public in accordance with the provisions of 5 U.S.C. 552, will be available for Web site viewing and printing in the Commission's Public Reference Room, 100 F Street, NE., Washington, DC 20549, on official business days between the hours of 10 a.m. and 3 p.m. Copies of the filing also will be available for inspection and copying at the principal office of the Exchange. All comments received will be posted without change; the Commission does not edit personal identifying information from submissions. You should submit only information that you wish to make available publicly. All submissions should refer to File Number SR–ISE–2011–27 and should be submitted on or before May 25, 2011.

For the Commission, by the Division of Trading and Markets, pursuant to delegated authority.[9]

Cathy H. Ahn,

Deputy Secretary.

[FR Doc. 2011–10805 Filed 5–3–11; 8:45 am]

BILLING CODE 8011–01–P

SECURITIES AND EXCHANGE COMMISSION

[Release No. 34–64354; File No. SR–CBOE–2011–041]

Self-Regulatory Organizations; Chicago Board Options Exchange, Incorporated; Notice of Filing of Proposed Rule Change Establishing Qualified Contingent Cross Orders

April 27, 2011.

Pursuant to Section 19(b)(1) of the Securities Exchange Act of 1934 (the "Act") [1] and Rule 19b–4 thereunder,[2] notice is hereby given that, on April 18, 2011, the Chicago Board Options Exchange, Incorporated ("Exchange" or "CBOE") filed with the Securities and Exchange Commission (the "Commission") the proposed rule change as described in Items I and II below, which Items have been prepared by the Exchange. The Commission is publishing this notice to solicit comments on the proposed rule change from interested persons.

I. Self-Regulatory Organization's Statement of the Terms of Substance of the Proposed Rule Change

The Exchange is proposing rules to create a new order type referred to as a qualified contingent cross order ("QCC Order"). The text of the rule proposal is available on the Exchange's Web site (*http://www.cboe.org/legal*), at the Exchange's Office of the Secretary and at the Commissions Public Reference Room.

II. Self-Regulatory Organization's Statement of the Purpose of, and Statutory Basis for, the Proposed Rule Change

In its filing with the Commission, the Exchange included statements concerning the purpose of and basis for the proposed rule change and discussed any comments it received on the proposed rule change. The text of these statements may be examined at the places specified in Item IV below. The Exchange has prepared summaries, set forth in sections A, B, and C below, of the most significant parts of such statements.

A. Self-Regulatory Organization's Statement of the Purpose of, and Statutory Basis for, the Proposed Rule Change

1. Purpose

The International Securities Exchange, LLC ("ISE") recently received Commission approval of a proposed rule change which adopted a qualified contingent cross order type (the "ISE Proposal"). CBOE has opposed the ISE Proposal, but believes we now need to adopt rules to introduce a similar order type for competitive reasons, as indicated in our qualified contingent order briefs and comment letters responding to the ISE Proposal.[3] Therefore, CBOE is proposing to adopt rules related to a new QCC Order type.

Background

The Exchange is currently a party to the Options Order Protection and Locked/Crossed Market Plan ("Distributive Linkage Plan"),[4] and has implemented Exchange rules in conjunction with that plan (the "Distributive Linkage Rules").[5] Similar to Regulation NMS under the Act, the Distributive Linkage Plan requires,

---

[9] 17 CFR 200.30–3(a)(12).

[1] 15 U.S.C. 78s(b)(1).

[2] 17 CFR 240.19b–4.

[3] ISE first proposed to adopt a qualified contingent cross order type through SR–ISE–2009–35. This proposal was approved by the Commission's Division of Trading and Markets (the "Division") pursuant to delegated authority on August 28, 2009, Securities Exchange Act Release No. 60584 (August 28, 2009), 74 FR 45663 (September 3, 2009) (SR–ISE–2009–35), but this approval was stayed by a CBOE petition seeking full Commission review. *See* Letters from Joanne Moffic-Silver, General Counsel and Corporate Secretary, CBOE, dated September 4 and 14, 2009. ISE thereafter submitted its modified rule change, SR–ISE–2010–73, and a letter requesting that the Commission vacate the Division's approval of SR–ISE–2009–35 simultaneous with the approval of SR–ISE–2010–73. CBOE submitted numerous letters objecting to ISE's original and modified qualified contingent cross proposals, however, the Commission approved SR–ISE–2010–73 and set aside SR–ISE–2009–35 on February 24, 2011. *See* Securities Exchange Act Release Nos. 62523 (July 16, 2010), 75 FR 43211 (July 23, 2010) (SR–ISE–2010–73) (ISE Proposal), 63955 (February 24, 2011) (SR–ISE–2010–73) (ISE Approval), and 69354 (February 24, 2011) (SR–ISE–2009–35); *see also, e.g.,* CBOE comment letters and materials dated July 16, 2009, September 4, 2009, September 14, 2009, September 17, 2009, December 3, 2009, January 20, 2010, April 7, 2010, and April 9, 2010, which can be viewed at the following links: *http://www.sec.gov/comments/sr-ise-2009–35/ise200935.shtml#notice; http://www.sec.gov/rules/sro/ise/isearchive/isearchive2009.shtml#SR–ISE–2009–35;* and *http://www.sec.gov/comments/sr–ise–2010–73/ise201073.shtml.* As a result, CBOE is submitting the instant rule change proposal as a competitive response to SR–ISE–2010–73.

[4] *See* Securities Exchange Act Release No. 60405 (July 30, 2009), 74 FR 39362 (August 6, 2009) (File No. 4–546).

[5] *See* Securities Exchange Act Release No. 60551 (August 20, 2009), 74 FR 43196 (August 26, 2009) (SR–CBOE–2009–040).

among other things, that the Exchange establish, maintain and enforce written policies and procedures that are reasonably designed to prevent "Trade-Throughs."[6] A Trade-Through is a transaction in an option series at a price that is inferior to the best price available in the market.[7]

The Distributive Linkage Plan replaced the Plan for the Purpose of Creating and Operating an Intermarket Option Linkage ("Old Linkage Plan"), and the Distributive Linkage Rules replaced the then-existing CBOE rules implementing the Old Linkage Plan ("Old Linkage Rules"). The Old Linkage Plan and the Old Linkage Rules provided a limited Trade-Through exemption for "Block Trades," defined to be trades of 500 or more contracts with a premium value of at least $150,000.[8] However, as with Regulation NMS, the Distributive Linkage Plan does not provide a Block Trade exemption.

The ISE Proposal stated that the loss of the Block Trade exemption, among other things, adversely affects the ability of its members to effect large trades that are tied to stock,[9] and therefore proposed a QCC as a limited substitute for the Block Trade exemption. While we continue to disagree with the premise that QCC serves as a limited substitute for the Block Trade exemption (*e.g.,* the Block Trade exemption is designed to provide Trade-Through relief, as discussed above; whereas QCC does not provide Trade-Through relief, as discussed below) and our views with respect to the potential impact that the ISE Proposal may have on market structure remain unchanged,[10] we nonetheless are proposing to adopt rules related to QCC Orders in order to permit the Exchange to remain competitive with ISE, and the other options exchanges that may also adopt rules for QCCs, by making QCC Orders available to CBOE Trading Permit Holders ("TPHs") and their customers through the Exchange.

Proposal

The Exchange is proposing to amend CBOE Rule 6.53, *Certain Types of Orders Defined,* to include a new QCC Order type. When a CBOE TPH effects a qualified contingent trade ("QCT")[11] in a Regulation NMS stock,[12] the TPH will be permitted to cross the options leg(s) of the trade on CBOE immediately without exposure if the order is for at least 1000 contracts, is part of a QCT,[13] is executed at a price at least equal to the national best bid or offer ("NBBO"), and there are no public customer orders resting in the Exchange's electronic book at the same price.

The QCC Order type would permit TPHs to provide their customers a net price for the entire trade, and then allow the TPH to execute the options leg(s) of the trade on CBOE at a price at least equal to the NBBO while using the QCT exemption to effect the trade in the equities leg at a price necessary to achieve the net price.[14] Under the proposal, CBOE will not permit the options component(s) of a QCC Order to trade through the NBBO.[15]

Under this proposal, CBOE would permit QCC Orders to be submitted electronically from on or off the floor through the CBOE Hybrid Trading System. In this regard, we note that, in order to effect proprietary orders (including QCC Orders) electronically from on the floor of the Exchange, TPHs must ensure that they qualify for an exemption from Section 11(a)(1) of the Act,[16] which concerns proprietary trading on an exchange by an exchange member. Generally, Section 11(a)(1) of the Act restricts any member of a national securities exchange from effecting any transaction on such exchange for (i) the member's own account, (ii) the account of a person associated with the member, or (iii) an account over which the member or a person associated with the member exercises discretion, unless a specific exemption is available. Examples of common exemptions include the exemption for transactions by broker dealers acting in the capacity of a market maker under Section 11(a)(1)(A),[17] the "G" exemption for yielding priority to non-members under Section 11(a)(1)(G) of the Act and Rule 11a1–1(T) thereunder,[18] and "Effect vs. Execute" exemption under Rule 11a2–2(T) under the Act.[19] In this regard, we note that, consistent with existing Exchange Rules for effecting proprietary orders from on the floor of the Exchange, TPHs effecting QCC Orders and relying on the G exemption would be required to yield priority to any interest in the electronic book at the same price (not just public customer orders) to ensure that non-member interest is protected.[20]

The Exchange's proposal addresses the mechanics of executing the stock and options components of a net-price transaction. The Exchange believes that it is necessary that it provide TPHs and their customers with the same trading capabilities available on other exchanges with respect to QCCs,

[6] Section 5(a) of the Distributive Linkage Plan.

[7] Section 2(21) of the Distributive Linkage Plan.

[8] Old Linkage Plan Sections 2(3) and 8(c)(i)(C); and former CBOE Rule 6.80(2).

[9] *See* ISE Proposal at 43212.

[10] *See* note 3, *supra.*

[11] The Commission, by order, has provided Trade-Through relief for QCTs from Rule 611(a) of Regulation NMS, 17 CFR 242.611(a). *See* Securities Exchange Act Release No. 57620 (April 4, 2008) (the "QCT Release," which supersedes a release initially granting the QCT exemption, Securities Exchange Act Release No. 54389 (August 31, 2006)). The QCT Release provides an exemption from Trade-Through liability in the equity market for multi-component, fully-hedged trades where one order is contingent on the execution of one or more additional orders.

[12] An "NMS stock" is defined in Rule 600 of Regulation NMS under the Exchange Act, 17 CFR 242.600.

[13] The Exchange is proposing to define a qualified contingent cross trade substantively identical to the Commission's definition in the QCT Release. A qualified contingent cross trade must meet the following conditions: (i) At least one component must be an NMS stock, as defined in Rule 600 of Regulation NMS, 17 CFR 242.600; (ii) all components must be effected with a product or price contingency that either has been agreed to by all the respective counterparties or arranged for by a broker-dealer as principal or agent; (iii) the execution of one component must be contingent upon the execution of all other components at or near the same time; (iv) the specific relationship between the component orders (*e.g.,* the spread between the prices of the component orders) is determined by the time the contingent order is placed; (v) the component orders must bear a derivative relationship to one another, represent different classes of shares of the same issuer, or involve the securities of participants in mergers or with intentions to merge that have been announced or cancelled; and (vi) the transaction must be fully hedged (without regard to any prior existing position) as a result of other components of the contingent trade. Consistent with the QCT Release and the ISE Proposal, TPHs must demonstrate that the transaction is fully hedged using reasonable risk-valuation methodologies. *See* QCT Release, *supra* note 11, at footnote 9.

[14] CBOE will adopt policies and procedures to ensure that TPHs use the QCC Order properly. First, we will require TPHs to properly mark all QCC Orders as such. In addition, CBOE will implement an examination and surveillance program to assess TPH compliance with the requirements applicable to QCC Orders, including the requirement that the stock leg of the transaction be executed at or near the same time as the options leg. We believe that ISE and other exchanges adopting a QCC-type order are also required to adopt similar policies and procedures.

[15] While the QCC Order type does not provide exposure for price improvement for the options leg(s) of a stock-option order, the options leg(s) must be executed at the NBBO or better. The Commission has previously approved crossing transactions with no opportunity for price improvement. *See, e.g.,* ISE Rules 715 and 721, and Interpretation and Policy .08 of CBOE Rule 6.74A.

[16] 15 U.S.C. 78k(a)(1).

[17] 15 U.S.C. 78k(a)(1)(A).

[18] 15 U.S.C. 78k(a)(1)(G) and 17 CFR 240.11a1–1(T).

[19] 17 CFR 240.11a2–2(T).

[20] *See, e.g.,* Securities Exchange Act Release No. 59546 (March 10, 2009), 74 FR 11144 (March 16, 2009)(SR–CBOE–2009–016) and related CBOE Regulatory Circular RG09–35 (regulatory circular provides TPHs guidance on the application of Section 11(a)(1) to trading on CBOE's Hybrid Trading System; the circular describes Section 11(a)(1) and certain of the exemptions to Section 11(a)(1) as well as the application of the (G) Order exemption and the Effect vs. Execute exemption (Rule 11a2–2(T)) to trading on the Hybrid Trading System).

including the change proposed herein, which would permit TPHs to execution the options leg(s) of large complex orders on the Exchange. This rule change is being proposed as a competitive response, and is substantially similar in all material respects, to the ISE Proposal that was recently approved by the Commission.[21]

2. Statutory Basis

The proposed rule change is consistent with Section 6(b) of the Act,[22] in general, and furthers the objectives of Section 6(b)(5) of the Act,[23] in particular, in that an exchange should have rules that are designed to prevent fraudulent and manipulative acts and practices, to promote just and equitable principles of trade, to remove impediments to and perfect the mechanism of a free and open market and a national market system, and, in general, to protect investors and the public interest. In particular, the proposed QCC Order type will prevent executions from occurring when there is a public customer order resting in the electronic book at the same price and will assure that only large-size orders (*i.e.,* orders of at least 1000 contracts) are eligible. The proposed rule will facilitate the ability of CBOE TPHs to execute large options orders that are tied to stock in an efficient manner, while also protecting the national market system against Trade-Throughs.

B. Self-Regulatory Organization's Statement on Burden on Competition

CBOE does not believe that the proposed rule change will impose any burden on competition that is not necessary or appropriate in furtherance of the purposes of the Act.

C. Self-Regulatory Organization's Statement on Comments on the Proposed Rule Change Received From Members, Participants, or Others

The Exchange neither solicited nor received comments on the proposal.

III. Date of Effectiveness of the Proposed Rule Change and Timing for Commission Action

Within 45 days of the date of publication of this notice in the **Federal Register** or within such longer period (i) as the Commission may designate up to 90 days of such date if it finds such longer period to be appropriate and publishes its reasons for so finding or (ii) as to which the self-regulatory organization consents, the Commission will:

(A) By order approve or disapprove such proposed rule change, or

(B) Institute proceedings to determine whether the proposed rule change should be disapproved.

IV. Solicitation of Comments

Interested persons are invited to submit written data, views, and arguments concerning the foregoing, including whether the proposed rule change is consistent with the Act. Comments may be submitted by any of the following methods:

Electronic Comments

- Use the Commission's Internet comment form (*http://www.sec.gov/rules/sro.shtml*); or
- Send an e-mail to *rule-comments@sec.gov*. Please include File Number SR–CBOE–2011–041 on the subject line.

Paper Comments

- Send paper comments in triplicate to Elizabeth M. Murphy, Secretary, Securities and Exchange Commission, 100 F Street, NE., Washington, DC 20549–1090.

All submissions should refer to File Number SR–CBOE–2011–041. This file number should be included on the subject line if e-mail is used. To help the Commission process and review your comments more efficiently, please use only one method. The Commission will post all comments on the Commission's Internet Web site (*http://www.sec.gov/rules/sro.shtml*). Copies of the submission, all subsequent amendments, all written statements with respect to the proposed rule change that are filed with the Commission, and all written communications relating to the proposed rule change between the Commission and any person, other than those that may be withheld from the public in accordance with the provisions of 5 U.S.C. 552, will be available for Web site viewing and printing in the Commission's Public Reference Room, 100 F Street, NE., Washington, DC 20549, on official business days between the hours of 10 a.m. and 3 p.m. Copies of such filing also will be available for inspection and copying at the principal office of the Exchange. All comments received will be posted without change; the Commission does not edit personal identifying information from submissions. You should submit only information that you wish to make available publicly. All submissions should refer to File No. SR–CBOE–2011–041 and should be submitted on or before May 25, 2011.

For the Commission, by the Division of Trading and Markets, pursuant to delegated authority.[24]

Cathy H. Ahn,

Deputy Secretary.

[FR Doc. 2011–10771 Filed 5–3–11; 8:45 am]

BILLING CODE 8011–01–P

[21] *See* note 3, *supra.*

[22] 15 U.S.C. 78f(b).

[23] 15 U.S.C. 78f(b)(5).

[24] 17 CFR 200.30–3(a)(12).

SECURITIES AND EXCHANGE COMMISSION

[Release No. 34–64358; File No. SR–CHX–2011–03]

Self-Regulatory Organizations; Chicago Stock Exchange, Inc.; Notice of Filing and Immediate Effectiveness of Proposed Rule Change To Alter the CHX Fee Schedule Relating to the CHX Connect Service

April 28, 2011.

Pursuant to Section 19(b)(1) of the Securities Exchange Act of 1934 ("Act") [1] and Rule 19b-4 thereunder,[2] notice is hereby given that, on April 26, 2011, the Chicago Stock Exchange, Inc. ("CHX" or "Exchange") filed with the Securities and Exchange Commission (the "Commission") the proposed rule change as described in Items I, II, and III below, which Items have been prepared by the Exchange. CHX has filed the proposal pursuant to Section 19(b)(3)(A) of the Act [3] and Rule 19b-4(f)(2) thereunder,[4] which renders the proposal effective upon filing with the Commission. The Commission is publishing this notice to solicit comments on the proposed rule change from interested persons.

I. Self-Regulatory Organization's Statement of the Terms of Substance of the Proposed Rule Change

The CHX proposes to amend its Schedule of Participant Fees and Assessments (the "Fee Schedule"), effective April 26, 2011, to alter its schedule of fees for Participants relating to its CHX Connect service. The text of this proposed rule change is available on the Exchange's Web site at *http://www.chx.com/rules/proposed_rules.htm,* at the principal office of the Exchange, and at the Commission's Public Reference Room, 100 F Street, NE., Washington, DC, 20549.

[1] 15 U.S.C. 78s(b)(1).

[2] 17 CFR 240.19b–4.

[3] 15 U.S.C. 78s(b)(3)(A).

[4] 17 CFR 240.19b–4(f)(2).

II. Self-Regulatory Organization's Statement of the Purpose of, and Statutory Basis for, the Proposed Rule Change

In its filing with the Commission, the CHX included statements concerning the purpose of and basis for the proposed rule changes and discussed any comments it received regarding the proposal. The text of these statements may be examined at the places specified in Item IV below. The CHX has prepared summaries, set forth in sections A, B and C below, of the most significant aspects of such statements.

A. Self-Regulatory Organization's Statement of the Purpose of, and Statutory Basis for, the Proposed Rule Change

1. Purpose

Through this filing, the Exchange is proposing to alter its schedule of fees charged to Participants for receiving orders through its CHX Connect service. CHX Connect is a communications service owned and operated by the Exchange which allows users to transmit orders and related transaction information directly to any destination (such as an over-the-counter market maker or order-routing vendor) connected to the service without being submitted to the Exchange's trading facilities. As an alternative to private order routing systems or vendors, users may also elect to use CHX Connect to transmit orders to the Exchange's Matching System and to CHX-registered Institutional Brokers.

Currently, the Fee Schedule provides for a $5,000 monthly base fee for Participants that receive orders through CHX Connect, as well as additional charges and credits based upon the number of shares that are processed by CHX Connect during the month. The Exchange proposes to simplify this structure by eliminating the additional charges and credits and limiting the fee charged to Participants that receive orders through CHX Connect to a flat $5,000 monthly amount. This proposed change will not raise fees on any Participant and, in some cases, will reduce the fees charged to Participants that receive orders through CHX Connect. The Exchange believes that these changes will equitably allocate fees for the CHX Connect service among its Participants by charging all Participants that receive orders through CHX Connect the same base amount.

2. Statutory Basis

The Exchange believes that the proposed rule change is consistent with Section 6(b) of the Act [5] in general, and furthers the objectives of Section 6(b)(4) of the Act [6] in particular, in that it provides for the equitable allocation of reasonable dues, fees and other charges among members and other persons using any facility or system which the Exchange operates or controls. Among other things, this change to the fee schedule would equitably allocate the fee for the CHX Connect service among Participants that receive orders through CHX Connect by charging all such Participants the same base amount. This proposed change will not raise fees on any Participant and, in some cases, will reduce the fees charged to Participants that receive orders through CHX Connect.

B. Self-Regulatory Organization's Statement on Burden on Competition

The Exchange does not believe that the proposed rule change will impose any burden on competition that is not necessary or appropriate in furtherance of the purposes of the Act.

C. Self-Regulatory Organization's Statement on Comments Regarding the Proposed Rule Change Received From Members, Participants or Others

No written comments were solicited or received.

III. Date of Effectiveness of the Proposed Rule Change and Timing for Commission Action

The foregoing rule change has become effective pursuant to Section 19(b)(3)(A)(ii) of the Act [7] and subparagraph (f)(2) of Rule 19b–4 thereunder [8] because it establishes or changes a due, fee or other charge applicable to the Exchange's members and non-members, which renders the proposed rule change effective upon filing.

At any time within 60 days of the filing of the proposed rule change, the Commission summarily may temporarily suspend such rule change if it appears to the Commission that such action is necessary or appropriate in the public interest, for the protection of investors, or otherwise in furtherance of the purposes of the Act.

IV. Solicitation of Comments

Interested persons are invited to submit written data, views, and arguments concerning the foregoing, including whether the proposed rule change is consistent with the Act. Comments may be submitted by any of the following methods:

Electronic Comments

- Use the Commission's Internet comment form (*http://www.sec.gov/rules/sro.shtml*); or
- Send an e-mail to *rule-comments@sec.gov.* Please include File Number SR–CHX–2011–03 on the subject line.

Paper Comments

- Send paper comments in triplicate to Elizabeth M. Murphy, Secretary, Securities and Exchange Commission, 100 F Street, NE., Washington, DC 20549–1090.

All submissions should refer to File Number SR–CHX–2011–03. This file number should be included on the subject line if e-mail is used. To help the Commission process and review your comments more efficiently, please use only one method. The Commission will post all comments on the Commission's Internet Web site (*http://www.sec.gov/rules/sro.shtml*). Copies of the submission, all subsequent amendments, all written statements with respect to the proposed rule change that are filed with the Commission, and all written communications relating to the proposed rule change between the Commission and any person, other than those that may be withheld from the public in accordance with the provisions of 5 U.S.C. 552, will be available for Web site viewing and printing in the Commission's Public Reference Room, 100 F Street, NE., Washington, DC 20549, on official business days between the hours of 10 a.m. and 3 p.m. Copies of the filing also will be available for inspection and copying at the principal office of the Exchange. All comments received will be posted without change; the Commission does not edit personal identifying information from submissions. You should submit only information that you wish to make available publicly. All submissions should refer to File Number SR–CHX–2011–03 and should be submitted on or before May 25, 2011.

For the Commission, by the Division of Trading and Markets, pursuant to delegated authority.[9]

Cathy H. Ahn,

Deputy Secretary.

[FR Doc. 2011–10856 Filed 5–3–11; 8:45 am]

BILLING CODE 8011–01–P

[5] 15 U.S.C. 78f(b).

[6] 15 U.S.C. 78f(b)(4).

[7] 15 U.S.C. 78s(b)(3)(A)(ii).

[8] 17 CFR 240.19b–4(f)(2).

[9] 17 CFR 200.30–3(a)(12).

SECURITIES AND EXCHANGE COMMISSION

[Release No. 34–64356; File No. SR–BSECC–2011–002]

Self-Regulatory Organizations; The Boston Stock Exchange Clearing Corporation; Notice of Filing and Immediate Effectiveness of Proposed Rule Change Relating to Amendments to the By-Laws of its Parent Corporation, the NASDAQ OMX Group, Inc.

April 27, 2011.

Pursuant to Section 19(b)(1) of the Securities Exchange Act of 1934 ("Act"), [1] notice is hereby given that on April 14, 2011, the Boston Stock Exchange Clearing Corporation ("BSECC") filed with the Securities and Exchange Commission ("Commission") the proposed rule change described in Items I, II, and III below, which Items have been prepared primarily by BSECC. BSECC filed the proposal pursuant to Section 19(b)(3)(A)(iii) of the Act [2] and Rule 19b–4(f)(6) [3] thereunder so that the proposal was effective upon filing with the Commission. The Commission is publishing this notice to solicit comments on the rule change from interested parties.

I. Self-Regulatory Organization's Statement of the Terms of Substance of the Proposed Rule Change

The proposed rule change relate to amendments to the By-Laws of BSECC's parent corporation, The NASDAQ OMX Group, Inc. ("NASDAQ OMX").

II. Self-Regulatory Organization's Statement of the Purpose of, and Statutory Basis for, the Proposed Rule Change

In its filing with the Commission, BSECC included statements concerning the purpose of and basis for the proposed rule change and discussed any comments it received on the proposed rule change. The text of these statements may be examined at the places specified in Item IV below. BSECC has prepared summaries, set forth in sections (A), (B), and (C) below, of the most significant aspects of these statements.[4]

(A) Self-Regulatory Organization's Statement of the Purpose of, and Statutory Basis for, the Proposed Rule Change

NASDAQ OMX recently made certain clarifying amendments to its By-Laws.[5] Specifically, the recently approved NASDAQ OMX rule change: (i) Amended the name of the Nominating Committee to the Nominating & Governance Committee; (ii) amended the NASDAQ OMX PHLX, Inc. reference to reflect a recent conversion to a limited liability company; and (iii) clarified By-Law Article IV, Section 4.4 that broker nonvotes are not counted as a vote cast either "for" or "against" a director in an uncontested election.[6]

NASDAQ OMX By-Laws previously provided for a Nominating Committee, which is appointed pursuant to the By-Laws. In addition to the responsibilities listed in By-Law Article IV, Section 4.13(h), the Nominating Committee also conducts certain governance functions such as consulting with the Board of Directors ("Board") and the management to determine the characteristics, skills, and experience desired for the Board as a whole and for its individual members, overseeing the annual director evaluation, and reviewing the overall effectiveness of the Board. Accordingly, NASDAQ OMX renamed and changed all references to the "Nominating Committee" in the By-Laws, to the "Nominating & Governance Committee" so that the title of the committee accurately reflects all of its current functions, including those that are deemed governance functions. The proposal to rename the Nominating Committee did not change the function of the committee but was intended to clarify the current functions and its governance role with respect to the Board selection process.

Additionally, NASDAQ OMX amended Article 1, Section (o) of NASDAQ OMX's By-Laws to change the reference to "NASDAQ OMX PHLX, Inc." to "NASDAQ OMX PHLX LLC" to reflect a recently filed rule change to convert NASDAQ OMX PHLX from a Delaware corporation to a Delaware limited liability company.[7]

Finally, NASDAQ OMX added the words "and broker nonvotes" to NASDAQ OMX's By-Law Article IV, Section 4.4 to make clear that broker nonvotes will not be counted as votes cast either "for" or "against" that director's election. In its filing to amend NASDAQ OMX's By-Laws, NASDAQ Stock Market LLC noted that NASDAQ OMX's past practice has been to not count a broker nonvote as a vote cast either for or against a director's election.[8] Accordingly, this change clarifies this practice by codifying it into the By-Laws, especially in light of NASDAQ OMX's recent change to a majority vote standard in the uncontested election of directors.

In 2010, NASDAQ OMX amended its By-Laws to state that in an uncontested election, a majority voting standard would apply to the election of its directors, requiring directors to be elected by the holders of a majority of the votes cast at any meeting for the election of directors at which a quorum is present in an uncontested election.[9] A plurality standard would still remain in a contested election. While in its filing to amend NASDAQ OMX's By-Laws, NASDAQ Stock Market LLC noted that it has always been NASDAQ OMX's practice to not count broker nonvotes "for" or "against" in director elections, the Commission noted in its Approval Order that the impact of the broker nonvote and how such votes are counted will take on added significance under NASDAQ OMX's newly adopted majority vote standard for director elections. Although in its filing NASDAQ Stock Market LLC stated that under Delaware case law,[10] broker nonvotes are not considered as votes cast for or against a proposal or director nominee, BSECC proposes the change for clarity and transparency purposes.

BSECC believes that the proposed rule change is consistent with the provisions of Section 6 of the Act,[11] in general, and with Sections 6(b)(1) and 6(b)(5) of the Act,[12] in particular, in that the proposal enables BSECC to be so organized as to have the capacity to be able to carry out the purposes of the Act, the rules and regulations thereunder, and self-regulatory organization rules, and is designed to prevent fraudulent and manipulative acts and practices, to promote just and equitable principles of trade, to foster cooperation and coordination with persons engaged in

[1] 15 U.S.C. 78s(b)(1).

[2] 15 U.S.C. 78s(b)(3)(A)(iii).

[3] 17 CFR 240.19b–4(f)(6).

[4] The Commission has modified the text of the summaries prepared by BSECC.

[5] Securities Exchange Act Release No. 34–64285 (April 8, 2011), 76 FR 21085 (April 14, 2011) (File No. SR–NASDAQ–2011–025) ("Approval Order"). SR–NASDAQ–2011–025 was filed by NASDAQ Stock Market LLC on behalf of NASDAQ OMX to amend the By-Laws of its parent corporation.

[6] *Id.*

[7] Securities Exchange Act Release No. 34–62783 (August 27, 2010), 75 FR 54204 (September 3, 2010) (File No. SR–Phlx–2010–104).

[8] Securities Exchange Act Release No. 34–63925 (February 17, 2011), 76 FR 10418 (February 24, 2011) (File No. SR–NASDAQ–2011–025).

[9] Securities Exchange Act Release 34–61786 (April 8, 2010), 75 FR 19436 (April 14, 2010) (File No. SR–NASDAQ–2010–025).

[10] *Berlin* v. *Emerald Partners,* 552 A.2d 482 494 (Del Supr. 1988).

[11] 15 U.S.C. 78f.

[12] 15 U.S.C. 78f(b)(1),(5).

regulating, clearing, settling, processing information with respect to, and facilitating transactions in securities, to remove impediments to and perfect the mechanism of a free and open market and a national market system, and, in general, to protect investors and the public interest.

BSECC believes that changing the name of the Nominating Committee to the Nominating and Governance Committee and amending references to an exchange name to reflect a corporate change to a limited liability company are both clarifying in nature. The changes will ensure that the committee's title accurately reflects its functions and will ensure that the By-Laws accurately and properly reflect an exchange entity name. As discussed above, the amendment that broker nonvotes will not be counted as a vote either "for" or "against" in director elections will codify NASDAQ OMX's past practice, providing clarity and transparency. Accordingly BSECC believes that the amendments are consistent with investor protection and the public interest.

(B) Self-Regulatory Organization's Statement on Burden on Competition

BSECC does not believe that the proposed rule change will have any impact or impose any burden on competition.

(C) Self-Regulatory Organization's Statement on Comments on the Proposed Rule Change Received from Members, Participants, or Others

Written comments relating to the proposed rule change have not been solicited or received. BSECC will notify the Commission of any written comments received by BSECC.

III. Date of Effectiveness of the Proposed Rule Change and Timing for Commission Action

The foregoing proposed rule change has become effective upon filing pursuant to Section 19(b)(3)(A)(iii) of the Act [13] and Rule 19b–4(f)(6) [14] thereunder because the proposed rule change does not: (i) Significantly affect the protection of investors or the public interest; (ii) impose any significant burden on competition; and (iii) become operative for 30 days after the date of the filing, or such shorter time as the Commission may designate. At any time within 60 days of the filing of the proposed rule change, the Commission summarily may temporarily suspend such rule change if it appears to the Commission that such action is necessary or appropriate in the public interest, for the protection of investors, or otherwise in furtherance of the purposes of the Act. If the Commission takes such action, the Commission shall institute proceedings to determine whether the proposed rule should be approved or disapproved.

IV. Solicitation of Comments

Interested persons are invited to submit written data, views, and arguments concerning the foregoing, including whether the proposed rule change is consistent with the Act. Comments may be submitted by any of the following methods:

Electronic Comments

- Use the Commission's Internet comment form (*http://www.sec.gov/rules/sro.shtml*); or
- Send an e-mail to *rule-comments@sec.gov.* Please include File Number SR–BSECC–2011–002 on the subject line.

Paper Comments

- Send paper comments in triplicate to Elizabeth M. Murphy, Secretary, Securities and Exchange Commission, 100 F Street, NE., Washington, DC 20549–1090.

All submissions should refer to File Number SR–BSECC–2011–002. This file number should be included on the subject line if e-mail is used. To help the Commission process and review your comments more efficiently, please use only one method. The Commission will post all comments on the Commission's Internet Web site (*http://www.sec.gov/rules/sro.shtml*). Copies of the submission, all subsequent amendments, all written statements with respect to the proposed rule change that are filed with the Commission, and all written communications relating to the proposed rule change between the Commission and any person, other than those that may be withheld from the public in accordance with the provisions of 5 U.S.C. 552, will be available for Web site viewing and printing in the Commission's Public Reference Room, 100 F Street, NE., Washington, DC 20549, on official business days between the hours of 10 a.m. and 3 p.m. Copies of such filings also will be available for inspection and copying at the principal office of BSECC and on BSECC's Web site at *http://nasdaqomxbx.cchwallstreet.com/NASDAQOMXBX/pdf/bsecc-filings/2011/SR-BSECC-2011-002.pdf.*

All comments received will be posted without change; the Commission does not edit personal identifying information from submissions. You should submit only information that you wish to make available publicly. All submissions should refer to File Number SR–BSECC–2011–002 and should be submitted on or before May 25, 2011.

For the Commission by the Division of Trading and Markets, pursuant to delegated authority.[15]

Cathy H. Ahn,

Deputy Secretary.

[FR Doc. 2011–10855 Filed 5–3–11; 8:45 am]

BILLING CODE 8011–01–P

[13] 15 U.S.C. 78s(b)(3)(A)(iii).

[14] 17 CFR 240.19b–4(f)(6). In addition, Rule 19b–4(f)(6) requires a self-regulatory organization to give the Commission written notice of its intent to file the proposed rule change at least five business days prior to the date of filing of the proposed rule change, or such shorter time as designated by the Commission. NASDAQ OMX PHLX LLC has satisfied this requirement.

[15] 17 CFR 200.30–3(a)(12).

SECURITIES AND EXCHANGE COMMISSION

[Release No. 34–64363; File No. SR–FINRA–2011–011]

Self-Regulatory Organizations; Financial Industry Regulatory Authority, Inc.; Order Approving Proposed Rule Change To Amend the By-Laws of FINRA Regulation, Inc. With Regard to District Committees

April 28, 2011.

I. Introduction

On February 25, 2011, the Financial Industry Regulatory Authority, Inc. ("FINRA") filed with the Securities and Exchange Commission ("Commission"), pursuant to Section 19(b)(1) of the Securities Exchange Act of 1934 ("Act") [1] and Rule 19b–4 thereunder,[2] a proposed rule change to amend the By-Laws of FINRA's regulatory subsidiary ("FINRA Regulation") with regard to District Committee structure and governance to, among other things, adjust the size and composition of District Committees to align more closely with the industry representation on the FINRA Board and replace District Nominating Committees with a process of direct nomination and election based on firm size. The proposed rule change was published for comment in the **Federal Register** on March 7, 2011.[3] The Commission received one comment letter on the proposed rule change.[4]

[1] 15 U.S.C. 78s(b)(1).

[2] 17 CFR 240.19b–4.

[3] *See* Securities Exchange Act Release No. 64002 (March 2, 2011), 76 FR 12390 ("Notice").

[4] *See* letter from Ed Horwitz, District and Committee Member, Horwitz and Associates, Inc.,

Continued

FINRA responded to the Horwitz Letter on April 15, 2011.[5] This order approves the proposed rule change.

II. Background—District Committees, District Nominating Committees, Districts and Regions

Pursuant to the By-Laws, the FINRA Regulation Board of Directors determines the boundaries of the districts and the size of the District Committees. The FINRA Regulation Board has established eleven districts, overseen by FINRA District Offices, which are administratively grouped within five regions (the West, the Midwest, the South, the North and New York).

Currently, FINRA District Committee members contribute to the regulatory process by, among other things, serving as panelists in disciplinary proceedings in accordance with FINRA Rules; considering and recommending policies and rule changes; and endeavoring to educate FINRA members and others as to the objects, purposes and work of FINRA and FINRA Regulation. The District Committees meet on average twice each year, jointly with the other District Committees in their respective regions. District Committees are composed of nine members, with the exception of the New York District Committee which has twelve. Due to staggered three-year District Committee membership terms, one-third of each District Committee's positions are available for election each year. In some cases, a District Committee may have additional positions to fill if a member has died, resigned, or been removed creating a vacancy on the Committee.

The District Nominating Committees are composed of five members each, a majority of whom have served on a District Committee, are current or former FINRA Regulation Directors, or current or former FINRA Governors. As part of the election process, the By-Laws require the Corporate Secretary to provide each District Nominating Committee and District Director notice, on or before June 1 of each year, identifying the members of the District Committees and District Nominating Committees whose terms are expiring within the next calendar year. After the vacancies are announced, any interested party may propose a candidate profile which will be used by the District Nominating Committees for review, a process that usually involves candidate interviews and that will conclude with the nomination of a slate of candidates for election. The By-Laws also provide a process whereby a registered person meeting the vacancy requirements may be considered for nomination as an additional ("petition") candidate in a contested election. In recent years, FINRA has witnessed a decline in the number of eligible individuals willing to serve on the District or District Nominating committees or to undergo the nomination process. FINRA believes this decline is due to a number of perceived problems which FINRA seeks to address by streamlining the nomination and election process as described below.

III. Description of the Proposed Rule Change

FINRA proposed to modify the FINRA Regulation By-Laws ("By-Laws") with regard to District Committees in several respects. FINRA proposed to:

- Adjust the size and composition of District Committees over a three-year transition period to align more closely with the industry representation on the FINRA Board;
- Replace District Nominating Committees with a process of direct nomination and election based on firm size;
- Codify the current practice of District Committees meeting on a regional basis;
- Eliminate the Advisory Council;
- Amend the qualification requirements and prescribe further term limits for District Committee members;
- Revise procedures for qualification and accounting of ballots to be administered solely by an Independent Agent; and
- Make other procedural and administrative changes.

IV. Discussion of Comment Letter

As noted above, the Commission received one comment letter on the proposed rule change and FINRA responded to the comment.[6] The commenter opposed the proposal for two reasons. First, the commenter states that the proposed rule change would give large firms disproportionate representation on the District Committees. The commenter notes that Large Firms make up 8.52 percent of FINRA's membership and employ 88.04 percent of the total registered representatives, while Small Firms make up 91.48 percent of FINRA's membership and employ 11.95 percent of the total registered representatives.[7] Though the commenter acknowledges that large firms employ a significant majority of registered representatives, he notes that representatives do not count as members.

FINRA responded to the issues raised in the Horwitz Letter. FINRA believes that the proposed composition of the District Committees which is based on the size of firms will ensure fairness and balance between those firms that make up the largest percentage of membership and those firms that employ the largest percentage of the registered representative population. FINRA noted that three-sevenths of the District Committee members would be associated with Small Firms, one-seventh with Mid-Sized Firms and three-sevenths with Large Firms, as these terms are defined in FINRA's rules. FINRA believes that having representation on the District Committees of firms of different sizes should result in inclusion of firms having different business models, and more fully represent the interests of FINRA's diverse membership in committee discussions. FINRA further states that the proposed compositional structure of the District Committees is similar to the compositional structures of industry representatives on the FINRA Board of Governors and the National Adjudicatory Council ("NAC").

Second, the commenter questions the proposal to eliminate the District Nominating Committees and replace them with a process of self-nomination by individuals who meet the qualification requirements. The commenter believes that this proposed change will make the voting process a popularity contest rather than a selection by peers based on proven track records and industry background.

FINRA stated that it has witnessed a decline in the number of eligible individuals willing to serve on the District or District Nominating committees or to undergo the nomination process. In response, FINRA proposed to replace District Nomination Committees with a process of direct candidate nomination and election by the membership because FINRA believes the proposal will create a more accessible, transparent, and effective election process. Moreover, FINRA notes that the District Nominating Committees are made up of a majority of former District Committee members, or current or former Directors of the FINRA Regulation Board and Governors

to Commission, dated March 25, 2011 ("Horwitz Letter").

[5] *See* letter from John Komoroske, Vice President, Member Regulation, FINRA, to Elizabeth M. Murphy, Secretary, Commission dated April 15, 2011 ("FINRA Response").

[6] *See supra* notes 4 and 5.

[7] The commenter has combined the categories of Mid-Sized Firm and Large Firm. *See* Response letter at 2.

of the FINRA Board. FINRA stated that it intends to seek informal input from retiring District Committee members regarding potential future members, thus continuing to draw upon the expertise of this group, without the need and expense of the current District Nominating Committees.

V. Commission Findings

The Commission has carefully reviewed the proposed rule change, the comment letter, and FINRA's response to the comment, and believes that FINRA has appropriately responded to the commenter's concerns. The Commission finds that the proposed rule change is consistent with the requirements of the Act and the rules and regulations thereunder applicable to a national securities association, and, in particular, with the provisions of Section 15A(b)(6) of the Act,[8] which requires, among other things, that FINRA rules be designed to prevent fraudulent and manipulative acts and practices, to promote just and equitable principles of trade, and, in general, to protect investors and the public interest.[9]

The proposed rule change is designed to streamline the nomination and election process for District Committees, adjust the size and composition of District Committees, amend the qualification requirements, prescribe further term limits for District Committee members, and make other administrative and technical changes to the process, and should result in additional candidates willing to serve on a District Committee. The proposal aligns the representation of members on the District Committees to be generally consistent with the industry representation on the FINRA Board of Governors and the industry representation on the NAC. As FINRA stated in its Response Letter, three-sevenths of the District Committee members will represent Small Firms, one-seventh will represent Mid-Sized Firms and three-sevenths will represent Large Firms. FINRA's goal is to more closely align the membership of the District Committees with its membership while streamlining the process for finding and electing candidates to serve on the District Committee.

FINRA will prohibit a District Committee member from serving consecutive three-year terms to bring different perspectives and views to District Committees. Individuals interested in serving more than one term may do so on a non-consecutive basis. FINRA is eliminating the Advisory Council and will seek views on policy issues and recommendations directly from its membership. With these changes, the Commission believes that FINRA will be able to realize the goals of the District Committee system without the time and resource expenditures now required of Advisory Council members and FINRA staff. Further, centralizing the election process within the Corporate Secretary's office should streamline the process making it more efficient. The Corporate Secretary's office will be able to apply its administrative experience from other FINRA elections to the process for District Committee elections. [10]

VI. Conclusion

It is therefore ordered, pursuant to Section 19(b)(2) of the Act,[11] that the proposed rule change (SR–FINRA–2011–011) be, and hereby is, approved.

For the Commission, by the Division of Trading and Markets, pursuant to delegated authority.[12]

Cathy H. Ahn,

Deputy Secretary.

[FR Doc. 2011–10857 Filed 5–3–11; 8:45 am]

BILLING CODE 8011–01–P

[8] 15 U.S.C 78*o*–3(b)(6).

[9] In approving the proposed rule change, the Commission has considered the proposed rule's impact on efficiency, competition, and capital formation. *See* 15 U.S.C. 78c(f).

[10] FINRA will implement the proposal on the first day of the month following Commission approval.

[11] 15 U.S.C. 78s(b)(2).

[12] 17 CFR 200.30–3(a)(12).

SECURITIES AND EXCHANGE COMMISSION

[Release No. 34–64369; File No. SR–FINRA–2011–021]

Self-Regulatory Organizations; Financial Industry Regulatory Authority, Inc.; Notice of Filing and Immediate Effectiveness of Proposed Rule Change Relating to Extension of Implementation Date for Expansion of the Order Audit Trail System to All NMS Stocks

April 29, 2011.

Pursuant to Section 19(b)(1) of the Securities Exchange Act of 1934 ("Act") [1] and Rule 19b–4 thereunder,[2] notice is hereby given that on April 26, 2011, Financial Industry Regulatory Authority, Inc. ("FINRA") filed with the Securities and Exchange Commission ("SEC" or "Commission") the proposed rule change as described in Items I and II below, which Items have been prepared by FINRA. FINRA has designated the proposed rule change as constituting a "non-controversial" rule change under paragraph (f)(6) of Rule 19b–4 under the Act,[3] which renders the proposal effective upon receipt of this filing by the Commission.

I. Self-Regulatory Organization's Statement of the Terms of Substance of the Proposed Rule Change

FINRA is proposing to establish October 3, 2011, as the implementation date of the amendments to FINRA Rules 7410 and 7470 that the Commission approved on November 12, 2010.[4]

The text of the proposed rule change is available on FINRA's Web site at *http://www.finra.org,* at the principal office of FINRA and at the Commission's Public Reference Room.

II. Self-Regulatory Organization's Statement of the Purpose of, and Statutory Basis for, the Proposed Rule Change

In its filing with the Commission, FINRA included statements concerning the purpose of and basis for the proposed rule change and discussed any comments it received on the proposed rule change. The text of these statements may be examined at the places specified in Item IV below. FINRA has prepared summaries, set forth in sections A, B, and C below, of the most significant aspects of such statements.

A. Self-Regulatory Organization's Statement of the Purpose of, and Statutory Basis for, the Proposed Rule Change

1. Purpose

FINRA is filing the proposed rule change to establish October 3, 2011, as the implementation date for the amendments to the OATS rules expanding the OATS recording and reporting requirements to all NMS stocks.

On November 12, 2010, the SEC approved SR–FINRA–2010–044, which amended FINRA Rules 7410 and 7470 to expand the OATS recording and reporting requirements to include all NMS stocks.[5] On January 11, 2011, FINRA published *Regulatory Notice* 11–03 announcing that the Commission approved the amendments and that FINRA was publishing a new version of the *OATS Reporting Technical Specifications.* Pursuant to the SEC's approval of SR–FINRA–2010–044 and

[1] 15 U.S.C. 78s(b)(1).

[2] 17 CFR 240.19b–4.

[3] 17 CFR 240.19b–4(f)(6).

[4] *See* Securities Exchange Act Rel. No. 63311 (November 12, 2010), 75 FR 70757 (November 18, 2010) (SR–FINRA–2010–044).

[5] *See* Securities Exchange Act Rel. No. 63311 (November 12, 2010), 75 FR 70757 (November 18, 2010) (SR–FINRA–2010–044).

the timing set forth in *Regulatory Notice* 11–03, the amendments to the OATS Rules are currently scheduled to begin to be phased in on July 11, 2011, six months after the publication of *Regulatory Notice* 11–03 and the revised *OATS Reporting Technical Specifications.*

Since the publication of the *Notice* and the *OATS Reporting Technical Specifications,* many firms and industry groups have requested that the implementation date for the new recording and reporting requirements be delayed to allow firms sufficient time to make necessary systems updates and changes. In addition, firms have noted that the time needed to make the necessary changes was increased because firms are also changing and updating their systems to comply with the SEC's new rule on risk management controls for broker-dealers with market access, Rule 15c3–5 under the Act,[6] which has a compliance date of July 14, 2011.[7] As a result of these discussions, FINRA is seeking to delay the implementation of the new OATS recording and reporting requirements for NMS stocks until October 3, 2011, to give firms sufficient time to make necessary changes to their systems to enable them to comply with the expanded OATS recording and reporting requirements. Consequently, FINRA will begin to phase-in the new recording and reporting requirements beginning on October 3, 2011.

FINRA has filed the proposed rule change for immediate effectiveness.

2. Statutory Basis

FINRA believes that the proposed rule change is consistent with the provisions of Section 15A(b)(6) of the Act,[8] which requires, among other things, that FINRA rules must be designed to prevent fraudulent and manipulative acts and practices, to promote just and equitable principles of trade, and, in general, to protect investors and the public interest. FINRA believes that extending the implementation date of the extension of the OATS Rules to all NMS stocks will ensure that firms have sufficient time to make the necessary changes to their systems to be able to comply with the new OATS recording and reporting requirements when they become effective.

B. Self-Regulatory Organization's Statement on Burden on Competition

FINRA does not believe that the proposed rule change will result in any burden on competition that is not necessary or appropriate in furtherance of the purposes of the Act.

C. Self-Regulatory Organization's Statement on Comments on the Proposed Rule Change Received From Members, Participants, or Others

Written comments were neither solicited nor received.

III. Date of Effectiveness of the Proposed Rule Change and Timing for Commission Action

Because the foregoing proposed rule change does not: (i) Significantly affect the protection of investors or the public interest; (ii) impose any significant burden on competition; and (iii) become operative for 30 days from the date on which it was filed, or such shorter time as the Commission may designate, it has become effective pursuant to Section 19(b)(3)(A) of the Act[9] and Rule 19b–4(f)(6) thereunder.[10]

At any time within 60 days of the filing of the proposed rule change, the Commission summarily may temporarily suspend such rule change if it appears to the Commission that such action is necessary or appropriate in the public interest, for the protection of investors, or otherwise in furtherance of the purposes of the Act.

IV. Solicitation of Comments

Interested persons are invited to submit written data, views, and arguments concerning the foregoing, including whether the proposed rule change is consistent with the Act. Comments may be submitted by any of the following methods:

Electronic Comments

- Use the Commission's Internet comment form (*http://www.sec.gov/rules/sro.shtml*); or
- Send an e-mail to *rule-comments@sec.gov.* Please include File Number SR–FINRA–2011–021 on the subject line.

Paper Comments

- Send paper comments in triplicate to Elizabeth M. Murphy, Secretary, Securities and Exchange Commission, 100 F Street, NE., Washington, DC 20549–1090.

All submissions should refer to File Number SR–FINRA–2011–021. This file number should be included on the subject line if e-mail is used. To help the Commission process and review your comments more efficiently, please use only one method. The Commission will post all comments on the Commission's Internet Web site (*http://www.sec.gov/rules/sro.shtml*). Copies of the submission, all subsequent amendments, all written statements with respect to the proposed rule change that are filed with the Commission, and all written communications relating to the proposed rule change between the Commission and any person, other than those that may be withheld from the public in accordance with the provisions of 5 U.S.C. 552, will be available for Web site viewing and printing in the Commission's Public Reference Room, 100 F Street, NE., Washington, DC 20549, on official business days between the hours of 10 a.m. and 3 p.m. Copies of such filing also will be available for inspection and copying at the principal office of FINRA. All comments received will be posted without change; the Commission does not edit personal identifying information from submissions. You should submit only information that you wish to make publicly available. All submissions should refer to File Number SR–FINRA–2011–021 and should be submitted on or before May 25, 2011.

For the Commission, by the Division of Trading and Markets, pursuant to delegated authority.[11]

Cathy H. Ahn,

Deputy Secretary.

[FR Doc. 2011–10897 Filed 5–3–11; 8:45 am]

BILLING CODE 8011–01–P

[6] 17 CFR 240.15c3–5.

[7] *See* Securities Exchange Act Release No. 63241 (November 3, 2010), 75 FR 69792 (November 15, 2010).

[8] 15 U.S.C. 78*o*–3(b)(6).

[9] 15 U.S.C. 78s(b)(3)(A).

[10] 17 CFR 240.19b–4(f)(6).

[11] 17 CFR 200.30–3(a)(12).

SMALL BUSINESS ADMINISTRATION

Advisory Committee on Veterans Business Affairs Meeting

AGENCY: U.S. Small Business Administration.

ACTION: Notice of open Federal Advisory Committee Meeting.

SUMMARY: The SBA is issuing this notice to announce the location, date, time, and agenda for the next meeting of the Advisory Committee on Veterans Business Affairs. The meeting will be open to the public.

DATES: May 19, 2011 from 9 a.m. to 5 p.m. in the Eisenhower Conference room, side B, located on the 2nd floor.

ADDRESSES: U.S. Small Business Administration, 409 3rd Street, SW., Washington, DC 20416.

SUPPLEMENTARY INFORMATION: Pursuant to section 10(a)(2) of the Federal Advisory Committee Act (5 U.S.C., Appendix 2), SBA announces the meeting of the Advisory Committee on Veterans Business Affairs. The Advisory Committee on Veterans Business Affairs serves as an independent source of advice and policy recommendation to the Administrator of the U.S. Small Business Administration.

The purpose of this meeting is to focus on framing the discussion for policy and programs that encompasses government support of veterans' entrepreneurship. For information regarding our veterans' resources and partners, please visit our Web site at *http://www.sba.gov/vets.*

FOR FURTHER INFORMATION CONTACT: The meeting is open to the public. Anyone wishing to attend this meeting or to make a presentation to the Advisory Committee on Veterans Business Affairs, advance notice is requested. Please contact Cheryl Simms, Program Liaison, at the U.S. Small Business Administration, Office of Veterans Business Development, 409 3rd Street, SW., Washington, DC 20416; Telephone number: (202) 619–1697; Fax number (202) 481–6085 or by e-mail at *cheryl.simms@sba.gov*.

If you require accommodations because of a disability, please contact the Office of Veterans Business Development at (202) 205–6773 at least two weeks in advance.

Dated: April 21, 2011.

Dan S. Jones,

SBA Committee Management Officer.

[FR Doc. 2011–10777 Filed 5–3–11; 8:45 am]

BILLING CODE 8025–01–P

SMALL BUSINESS ADMINISTRATION

Revocation of License of Small Business Investment Company

Pursuant to the authority granted to the United States Small Business Administration by the Prospero Ventures of the United States District Court for the Northern District of Washington, Oakland Division, dated Prospero Ventures, the United States Small Business Administration hereby revokes the license of Prospero Ventures, L.P. a California Limited Partnership, to function as a small business investment company under the Small Business Investment Company License No. 979–0422 issued to Prospero Ventures, L.P. on September 29, 1999 and said license is hereby declared null and void as of September 15, 2010.

United States Small Business Administration.

Dated: April 27, 2011.

Sean J. Greene,

Associate Administrator for Investment.

[FR Doc. 2011–10776 Filed 5–3–11; 8:45 am]

BILLING CODE 8025–01–P

OFFICE OF THE UNITED STATES TRADE REPRESENTATIVE

Petition Under Section 302 on Access to the German Bar Aptitude Examination; Decision Not To Initiate Investigation

AGENCY: Office of the United States Trade Representative.

ACTION: Decision not to initiate investigation.

SUMMARY: The United States Trade Representative (Trade Representative) has determined not to initiate an investigation under Section 301 of the Trade Act of 1974, as amended (Trade Act), with respect to a petition alleging, among other things, that the Government of Germany has breached obligations under the Treaty of Friendship, Commerce and Navigation Between the United States of America and the Federal Republic of Germany (the FCN Treaty) to afford U.S. citizens national treatment and most-favored-nation (MFN) status in connection with requirements for access to the German bar aptitude examination.

DATES: *Effective Date:* April 28, 2011.

FOR FURTHER INFORMATION CONTACT: Jared Wessel, Assistant General Counsel, (202) 395–3150; William Busis, Deputy Assistant United States Trade Representative for Monitoring and Enforcement and Chair of the Section 301 Committee, (202) 395–3150; David Weiner, Deputy Assistant United States Trade Representative for Europe, (202) 395–4620; or Christopher Melly, Deputy Assistant United States Trade Representative for Services, (202) 395–4510.

SUPPLEMENTARY INFORMATION: On March 14, 2011, Mr. Peter M. Haver filed a petition on his own behalf pursuant to Section 302 of the Trade Act addressed to acts, policies, and practices of the Government of Germany regarding requirements for access to the German bar aptitude examination. The petition contends that Mr. Haver (the petitioner) is a U.S. citizen who practices U.S. and French law as a foreign legal consultant in Germany. The petition states that under German law, only nationals of Germany, the European Economic Area, and the Swiss Confederation are eligible to sit for the German bar aptitude examination. The petition alleges that these acts, policies, and practices restrict U.S. citizens from sitting for the German bar aptitude examination and, therefore, from gaining admission to the German bar, and that these restrictions: (1) Violate the national treatment obligations of the FCN Treaty; (2) violate the MFN obligations of the FCN Treaty; and
(3) constitute unreasonable and discriminatory treatment of U.S. citizens. The petition requests that the Trade Representative Atake measures" against Germany under Section 301.

The Trade Representative, upon the advice of the interagency Section 301 Committee, has decided not to initiate an investigation under Section 301 of the Trade Act in response to the petition. The Trade Representative's decision is based on three separate grounds.

First, the petition fails to allege that Mr. Haver has the significant interest necessary to have standing as an interested person to file a petition under Section 302 of the Trade Act. *See* 15 CFR 2006.0(b). According to the petition, Mr. Haver need not sit for the examination to practice law in Germany because he has an "automatic right to German bar membership" based on the fact that he has resided and practiced law in Germany for three years. Because Mr. Haver claims he has another, automatic option for obtaining admission to the German bar, the petition fails to allege that Mr. Haver has the significant interest necessary to have standing to file a petition regarding access to the German bar aptitude examination. The petition does not allege, for example, that there is any economic benefit to Mr. Haver through admission by examination that he would not obtain through automatic admission based on his three years of practice.

Second, in the framework of the Trade Act, the petition's allegations that Germany breached its national treatment and MFN obligations under the FCN Treaty amount to an allegation of an unjustifiable act, policy, or practice under Section 301(d)(4) (defining an unjustifiable act, policy, or practice as one that "is in violation of, or inconsistent with, the international legal rights of the United States," including an act, policy, or practice that "denies national or most-favored-nation treatment"), and not an allegation of the violation of a "trade agreement" under Section 301(a)(1)(B)(i). To be actionable under Section 301, an unjustifiable act, policy, or practice must burden or restrict U.S. commerce. *See* Section

301(a)(1)(B)(ii) of the Trade Act. Here, the petition fails to include sufficient information on burdens or restrictions on U.S. commerce arising from the alleged restrictions under German law on access to the German bar aptitude examination. The petition does not establish the volume of trade in legal services involved or how that volume is impacted by the restrictions in question. *See also* 15 CFR 2006.1(a)(7) (requiring that a petition contain information on the burden or restriction on U.S. commerce.)

Third, the initiation of a Section 301 investigation in response to the petition would not be an effective means to address the matters raised in the petition. *See* Section 302(c) of the Trade Act. According to the petition, Mr. Haver previously raised his claims under the FCN Treaty in German courts, and the German courts have rejected those claims. Mr. Haver claims that the German courts' interpretation of the FCN Treaty is erroneous.

The FCN Treaty does include a dispute settlement mechanism: disputes between the parties regarding the interpretation or application of the FCN Treaty may be submitted to the International Court of Justice (ICJ). An ICJ proceeding, however, would not be an effective tool for purposes of Section 301 of the Trade Act. In particular, under the statutory provisions applicable to the allegations in the petition, the Trade Representative would have to conclude the investigation, and decide what action to take under Section 301, within 12 months. *See* Section 304(a)(2)(B) of the Trade Act. An ICJ proceeding conducted pursuant to the FCN Treaty would typically take longer than 12 months. For this and other reasons, initiation of an investigation under Section 301 would not be an effective means to address the alleged restrictions on access to the German bar aptitude examination.

This decision not to initiate an investigation under Section 301 does not preclude other means to try to address the matters raised in the petition.

William Busis,

Chair, Section 301 Committee.

[FR Doc. 2011–10874 Filed 5–3–11; 8:45 am]

BILLING CODE 3190–W1–P

DEPARTMENT OF TRANSPORTATION

Federal Aviation Administration

Notice of Intent To Rule on Request To Release Airport Property at Hammond Northshore Regional Airport, Hammond, LA

AGENCY: Federal Aviation Administration (FAA), DOT.

ACTION: Notice of request to release airport property.

SUMMARY: The FAA proposes to rule and invites public comment on the release of land at the Hammond Northshore Regional Airport, Hammond, Louisiana. The property consists of vacant land located on the corner of Industrial Park Road and Shelton Road near the Hammond Northshore Regional Airport just outside the city limits of Hammond, Louisiana. The land in question was acquired by the city of Hammond, Louisiana on September 8, 1948, through provisions of the Federal Property and Administration Service Act of 1949 and the Surplus Property Act of 1944.

As airport owner, the city of Hammond has requested to release a parcel in an effort to obtain a control tower at the Hammond Northshore Regional Airport. As part of this release, this parcel will change from aeronautical to non-aeronautical use and be limited to some type of commercial or industrial use under the provisions of Section 125 of the Wendell H. Ford Aviation Investment Reform Act for the 215t Century (AIR 21).

DATES: Comments must be received on or before June 3, 2011.

ADDRESSES: *Comments on this application may be mailed or delivered to the FAA at the following address:* Mr. Lacey D. Spriggs, Federal Aviation Administration, Southwest Region, Airports Division, Manager/Louisiana/New Mexico Airports Development Office, ASW–640, 2601 Meacham Boulevard, Fort Worth, Texas 76137.

In addition, one copy of any comments submitted to the FAA must be mailed or delivered to Mr. Bradley R. Brandt, Acting Aviation Director, Louisiana Department of Transportation, at the following address: P.O. Box 94245, Baton Rouge, Louisiana 70804.

FOR FURTHER INFORMATION CONTACT: Mr. Justin Barker, Federal Aviation Administration, Program Manager/Louisiana/New Mexico Airports Development, Office, ASW–640, 2601 Meacham Boulevard, Fort Worth, Texas 76137.

The request to release property may be reviewed in person at this same location.

SUPPLEMENTARY INFORMATION: The FAA invites public comment on the request to release property at the Hammond Northshore Regional Airport under the provisions of the AIR 21.

The following is a brief overview of the request:

As airport owner, the city of Hammond has requested to release a parcel comprised of 17.01 acres that was acquired under the 1945 acquisition of property with aeronautical rights attached. The release of property will not adversely affect the Hammond Northshore Regional Airport because the parcel is located immediately east of the airport on the on Industrial Park Road. The parcel is separated from the airport by Industrial Park Road. This property was part of the Runway Protection Zone for Runway 22 which is no longer in use and can never be used for airport purposes. The sale is estimated to provide $545,000.00 to be used for construction of a new control tower at the airport. In the event that the proposed control tower project is not funded, the city of Hammond has provided written concent that the proceeds of this land release will be used for other needed airport improvements at the Hammond Northshore Regional Airport.

Any person may inspect the request in person at the FAA office listed above under **FOR FURTHER INFORMATION CONTACT**.

In addition, any person may, upon request, inspect the application, notice and other documents germane to the application in person at the Hammond Northshore Regional Airport.

Issued in Fort Worth, Texas on April 1, 2011.

Kelvin L. Solco,

Manager, Airports Division.

[FR Doc. 2011–10637 Filed 5–3–11; 8:45 am]

BILLING CODE M

DEPARTMENT OF TRANSPORTATION

Federal Aviation Administration

Public Notice for Waiver of Aeronautical Land-Use Assurance; Richard Downing Airport, Coshocton, OH

AGENCY: Federal Aviation Administration, DOT.

ACTION: Notice of intent of waiver with respect to land.

SUMMARY: The Federal Aviation Administration (FAA) is considering a

proposal to change a portion of the airport from aeronautical use to non-aeronautical use and to authorize the sale of the airport property. The proposal consists of the sale of vacant, unimproved land owned by the Coshocton County Regional Airport Authority. Parcels LR3, LR4, LR5, LR6, and LR7 total approximately 9.714 acres. The land was acquired under grants 5–39–0028–01, 5–39–0028–02, and 3–39–0028–0183. There are no impacts to the airport by allowing the airport to dispose of the property. The proposed land for release is vacant, not required for future development, safety, or compatible land use. Approval does not constitute a commitment by the FAA to financially assist in the disposal of the subject airport property nor a determination of eligibility for grant-in-aid funding from the FAA. The disposition of proceeds from the disposal of the airport property will be in accordance with FAA's Policy and Procedures Concerning the Use of Airport Revenue, published in the **Federal Register** on February 16, 1999.

In accordance with section 47107(h) of title 49, United States Code, this notice is required to be published in the **Federal Register** 30 days before modifying the land-use assurance that requires the property to be used for an aeronautical purpose.

DATES: Comments must be received on or before June 3, 2011.

FOR FURTHER INFORMATION CONTACT: Alex Erskine, Program Manager, Detroit Airports District Office, 11677 South Wayne Road, Suite 107, Romulus, Michigan 48174. *Telephone Number:* (734) 229–2927/*FAX Number:* (734) 229–2950. Documents reflecting this FAA action may be reviewed at this same location or at Richard Downing Airport, Coshocton, Ohio.

SUPPLEMENTARY INFORMATION: Following are legal descriptions of the property located in Keene and Tuscarawas Townships, County of Coshocton, State of Ohio, and described as follows:

Parcel LR3

Being a tract of land in Lot 22. Fourth Quarter, Hamilton's Section, D.V. 6/62, Range 6W, Township 6N, Keene Township, and the First Quarter, Range 6W. Township 5N. Tuscarawas Township, Coshocton County, State of Ohio, and being further described as follows:

Beginning at a point on the South line of said Keene Township and on the North line of said Tuscarawas Township, said point being in Airport Road and on the West line of the lands of R.F. & K.A. Adams (O.R. 123/181), said point being located 271 degrees 01′ 42″, a distance of one thousand three hundred six and sixty hundredths (1,306.60) feet from a 5″ concrete monument recovered at the Southeast corner of said Lot 22;

Thence, crossing into the said First Quarter of Tuscarawas Township and with the said West line of the lands of R.F. & K.A. Adams, 174 degrees 55′42″, a distance of eighteen and eighty-seven hundredths (18.87) feet to a point at the Northeast corner of the lands of the City of Coshocton (D.V. 236/173) (old canal lands);

Thence, with the said lands of the City of Coshocton the following five (5) courses:

1. 264 degrees 55′15″, a distance of twenty-four and ninety-one hundredths (24.91) feet to a set steel pin;
2. 266 degrees 55′31″, a distance of one hundred and six hundredths (100.06) feet to a point;
3. 267 degrees 29′51″, a distance of one hundred and ten hundredths (100.10) feet to a point;
4. 259 degrees 12′37″, a distance of one hundred and fifty hundredths (100.50) feet to a point;
5. 267 degrees 40′08″, a distance of twenty-two and twenty-six hundredths (22.26) feet to a set steel pin;

Thence, running through the lands of the Coshocton County Regional Airport Authority (D.V. 274/349) (Second Tract) with the following three (3) courses;

1. Crossing back into said Lot 22, Fourth Quarter, Keene Township, 354 degrees 39′22″, a distance of six hundred twenty-eight and seventeen hundredths (628.17) feet to a set steel pin;
2. 84 degrees 24′53″, a distance of three hundred seventeen and ninety-five hundredths (317.95) feet to a set steel pin;
3. Continuing 84 degrees 24′53″, a distance of thirty-two and nineteen hundredths (32.19) feet to a point on the said West line of the lands of R.F. & K.A. Adams and in said Airport Road;

Thence, with the said lands of R.D. & K.A. Adams and running in said Airport Road, 174 degrees 55′42″, a distance of four hundred fifty-one and sixty-three hundredths (451.63) feet to a point;

Thence, running through the said lands of the Coshocton County Regional Airport Authority, 269 degrees 55′42″, a distance of thirty-two and twelve hundredths (32.12) feet to a point at the Southeast corner of Lot 31, Town of Newport (D.V. 5/479) (vacated 1894);

Thence, with said Lot 31 the following four (4) courses:

1. 269 degrees 55′42″, a distance of one hundred thirty-two and no hundredths (132.00) feet to a point;
2. 359 degrees 55′42″, a distance of one hundred thirty-two and no hundredths (132.00) feet to a point;
3. 90 degrees 10′02″, a distance of one hundred twenty and fifty hundredths (120.50) feet to a point;
4. 174 degrees 55′42″, a distance of one hundred thirty-two and no hundredths (132.00) feet to a point;

Thence, running through the said lands of the Coshocton County Regional Airport Authority, 89 degrees 55′42″, a distance of thirty-two and twelve hundredths (32.12) feet to a point in said Airport Road and on the said West line of the lands of R.F. & K.A. Adams;

Thence, running in said Airport Road and with the said West line of the lands of R.F. & K.A. Adams, 174 degrees 55′42″, a distance of sixty-five and seventy-six hundreths (65.76) feet to a point on a projection of the North line of the lands of the Board of Commissioners (O.R. 260/185);

Thence, with the said projection of the North line of the Board of Commissioners, 264 degrees 09′56″, a distance of eight and seventy hundredths (8.70) feet to a point on the centerline of said Airport Road and at the Northeast corner of the said lands of the Board of Commissioners;

Thence, with the said lands of the Board of Commissioners the following six (6) courses:

1. With the said centerline of Airport Road, 174 degrees 09′45″, a distance of eighty and no hundredths (80.00) feet to a point;
2. 271 degrees 19′21″, a distance of thirty-five and ninety hundredths (35.90) feet to a set steel pin;
3. Continuing 271 degrees 19′21″, a distance of sixty-two and thirty-eight hundredths (62.38) feet to a set steel pin;
4. 354 degrees 09′56″, a distance of sixty-seven and seventy-seven hundredth (67.77) feet to a set steel pin;
5. 84 degrees 09′56″, a distance of sixty and no hundredths (60.00) feet to a set steel pin;
6. Continuing 84 degrees 09′56″, a distance of thirty-seven and fifty-one hundredths (37.51) feet to a point at the said Northeast corner of the said lands of the Board of Commissioners;

Thence, with the said projection of the North line of the lands of the Board of Commissioners, 84 degrees 09′56″, a distance of eight and seventy hundredths (8.70) feet to the point on the said West line of the lands of R.F. & K.A. Adams;

Thence, with the said West line of the lands of R.F. & K.A. Adams, 174 degrees 55′42″, a distance of ninety-four and seven hundredths (94.07) feet to the point of beginning;

The above described tract contains four and four hundred sixty-two thousandths (4.462) acres, more or less, of which four and one hundred eighty-seven thousandths (4.187) acres are in said Lot 22, Fourth Quarter, Keene Township (part of 017–09400109–00) and zero and two hundred seventy-five thousandths (0.275) acres are in the said First Quarter, Tuscarawas Township (part of 035–15100002–01), as surveyed by R. Scott Johnson, Registered Professional Surveyor No. 6791, August 25, 2005.

This description is intended to convey part of the Second Tract of the lands previously transferred to the Coshocton County Regional Airport Authority (D.V. 274/349).

(Quit-Claim Area)

Being a tract of land in Lot 22, Fourth Quarter, Hamilton's Section, D.V. 6/62, Range 6W, Township 6N, Keene Township, Coshocton County, State of Ohio, and being further described as follows:

Beginning at a point at the Southeast corner of Lot 31, Town of Newport (D.V. 5/479) (vacated 1894), said point being located from a 5″ concrete monument recovered at the Southeast comer of said Lot 22 by the following three (3) courses:

1. With the South line of said Keene Township, 271 degrees 01′42″, a distance of one thousand three hundred six and sixty hundredths (1,306.60) feet to a point in Airport Road and on the West line of the lands of R.F. & K.A. Adams (O.R. 123/181);

2. Running in said Airport Road and with the said West line of the lands of R.F. & K.A. Adams, 354 degrees 55′42″, a distance of one hundred fifty-nine and eighty-three hundredths (159.83) feet to a point on a projection of the South line of said Lot 31;

3. With the said projection of the South line of Lot 31, 269 degrees 55′42″, a distance of thirty-two and twelve hundredths (32.12) feet to the said beginning point;

Thence, with said Lot 31 the following four (4) courses:

1. 269 degrees 55′42″, a distance of one hundred thirty-two and no hundredths (132.00) feet to a point;

2. 359 degrees 55′42″, a distance of one hundred thirty-two and no hundredths (132.00) feet to a point;

3. 90 degrees 10′02″, a distance of one hundred twenty and fifty hundredths (120.50) feet to a point;

4. 174 degrees 55′42″, a distance of one hundred thirty-two and no hundredths (132.00) feet to the point of beginning;

The above described tract contains zero and three hundred eighty-two thousandths (0.382) acres, more or less, as surveyed by R. Scott Johnson, Registered Professional Surveyor No. 6791, August 25, 2005.

This description is intended to convey all of Lot 31, Town of Newport, D.V. 5, Page 479 (vacated 1894) (017–09400109–00).

Parcel LR4

Being a tract of land in Lot 22, Plat of Hamilton's Section, Deed Book 6, Page 62, Fourth Quarter, Range 6W, Township 6N, Keene Township, Coshocton County, State of Ohio, and being further described as follows;

Note: North based on GPS observations. All steel pins indicated as set are ⅝″ x 30″ rebar with plastic caps. *Research Data:* Deeds, surveys and plats of record.

Beginning at a steel pin set on the Southwest Right-of-Way line of Hanger Court, said pin being located from a point at the Southwest corner of the Dedication Plat of the Extension of Airport Road (C. R. 202), Plat Book 4, Page 144, by the following four (4) courses:

1. With the Southeast line of the vacated portion of Airport Road (C. R. 202) (O.R. 350/279), 205 degrees 19′20″, a distance of eighty-one and fifty-seven hundredths (81.57) feet to a point on the Right-of-Way line of said Airport Road (C. R. 202);

2. With the said Right-of-Way line of Airport Road (C. R. 202), 128 degrees 03′55″, a distance of sixty and ninety-six hundredths (60.96) feet to a point;

3. With the said Right-of-Way line of Hanger Court, 214 degrees 17′38″, a distance of five hundred ten and thirty-nine hundredths (510.39) feet to a point;

4. Continuing with the said Right-of-Way line of Hanger Court, 126 degrees 32′23″, a distance of eight and twenty hundredths (8.20) feet to the said beginning point;

Thence, continuing with the said Right-of-Way line of Hanger Court, 126 degrees 32′23″, a distance of forty and no hundredths (40.00) feet to a set steel pin;

Thence, running through the lands of the Coshocton County Regional Airport Authority (D.R. 274/349) with the following five (5) courses:

1. 216 degrees 32′23″, a distance of five hundred fifty-four and ninety-eight hundredths (554.98) feet to a set steel pin;

2. 126 degrees 32′23″, a distance of five hundred forty and eighty hundredths (540.80) feet to a set steel pin;

3. 216 degrees 32′23″, a distance of one hundred fifty and no hundredths (150.00) feet to a set steel pin;

4. 306 degrees 32′23″, a distance of five hundred eighty and eighty hundredths (580.80) feet to a set steel pin;

5. 36 degrees 32′23″, a distance of seven hundred four and ninety-eight hundredths (704.98) feet to the point of beginning;

The above described tract contains two and five hundred ten thousandths (2.510) acres, more or less, as surveyed by R. Scott Johnson, Registered Professional Surveyor No. 6791, September 19, 2007.

Parcel LR5

Being a tract of land in Lot 21, Plat of Hamilton's Section, D.B. 6, Page 62, Fourth Quarter. Range 6W, Township 6N, Keene Township. Coshocton County, State of Ohio and being further described as follows;

Beginning at a recovered 4″ square concrete monument at the Northeast corner of Lot 13, J.H. Snedeker Park Addition No. 5, Plat Book 3, Page 42 and on the West line of the said Fourth Quarter;

Thence through the lands of the Coshocton County Regional Airport Authority (D.R. 274/349) the following three courses;

1. 115 degrees 27′ 01″ a distance of two-hundred eighty-one and forty-seven hundredths (281.47) feet to a set steel pin;

2. 193 degrees 51′ 43″ a distance of seventy-one and eighty-one hundredths (71.81) feet to a set steel pin;

3. 272 degrees 32′ 14″ a distance of two-hundred forty-five and zero hundredths (245.00) feet to a steel pin set on the said West line of the Fourth Quarter;

Thence with the said West line of the Fourth Quarter 02 degrees 29′ 14″ a distance of one-hundred eighty and zero hundredths (180.00) feet to the said point of beginning;

The above described tract contains zero and seven-thousand three-hundred thirty-five ten-thousandths (0.7335) acres, more or less, as surveyed by R. Scott Johnson, Registered Professional Surveyor No. 6791. January 26, 2009.

This description is intended to convey part of the lands previously transferred to the Coshocton County Regional Airport Authority (D.R. 274/349) (017–09400096–00 part).

Parcel LR6

Being a tract of land in Lot 21, Plat of Hamilton's Section, D.B. 6, Page 62, Fourth Quarter, Range 6W, Township 6N, Keene Township, Coshocton

County, State of Ohio and being further described as follows;

Beginning at a point at the Southeast corner of Lot 15, J.H. Snedeker Park Addition No. 5, Plat Book 3, Page 42. Said point also being located on the West line of the said Fourth Quarter, in a sand box and 92 degrees 32′ 14″ a distance of ninety-four and thirty-one hundredths (94.31) feet from a 4″ square concrete monument with X recovered at the Southwest corner of said Lot 15;

Thence with the East line of said J.H. Snedeker Park Addition No. 5 and the said West line of the Fourth Quarter 02 degrees 29′ 14″ a distance of one-hundred seventy-two and zero hundredths (172.00) feet to a set steel pin; thence through the lands of the Coshocton County Regional Airport Authority (D.R. 274/349 & O.R. 437/946) the following four (4) courses;

1. 92 degrees 32′ 14″ a distance of two-hundred forty-five and zero hundredths (245.00) feet to a set steel pin;

2. 201 degrees 51′ 31″ a distance of two-hundred fourteen and six hundredths (214.06) feet to a recovered 5/8″ rebar with plastic cap;

3. 272 degrees 32′ 14″ a distance of one-hundred forty-four and zero hundredths (144.00) feet to a recovered 5/8″ rebar with plastic cap at the center of vacated T.R. 201 (O.R. 437/946);

4. Continuing 272 degrees 32′ 14″, a distance of thirty and no hundredths (30.00) feet to a point on the said East line of J.H. Snedeker Park Addition No. 5, Plat Book 3, Page 42;

Thence with the said East line of J.H. Snedeker Park Addition No. 5, Plat Book 3, Page 42, 02 degrees 29′ 14″ a distance of thirty and zero hundredths (30.00) feet to the point of beginning;

The above described tract contains nine-thousand seven-hundred fifteen ten-thousandths (0.9715) acres, more or less, as surveyed by R. Scott Johnson, Registered Professional Surveyor No. 6791, January 26, 2009 and revised September 3, 2009.

This description is intended to convey part of the lands previously transferred to the Coshocton County Regional Airport Authority (D.R. 274/349 & O.R. 437/946) (017–09400096–00 part).

Parcel LR7

Being 0.662 acres, more or less, in Lot 21, Plat of Hamilton's Section, DR 6, page 62, in the Fourth Quarter of Township 6 North, Range 6 West, United States Military Lands, in Township of Keene, in the County of Coshocton, in the State of Ohio, conveyed to Coshocton County Regional Airport Authority, DR 274–349 (part, 1st. tract) and OR 109–64 (part), Parcel No. 017–09400096–00 (part) and more particularly described as follows:

Commencing at a concrete monument found at the Southeast corner of Lot 36, J. H. Snedeker Park Addition No. 5, Plat Book 3, page 42, said monument being the *True Point of Beginning:*

Thence, with the East line of Lot 36 and the extension of the East line of Lot 36, of said Plat, the following 2 courses:

1. Thence, N. 02° 22′ 32″ E. a distance of 175.49′ to a concrete monument found;

2. Thence, N. 02° 22′ 32″ E. a distance of 30.00′ to a point;

Thence, through the property of Coshocton County Regional Airport Authority, DR 274–349 and OR 109–64, the following 8 courses:

1. Thence, S, 87° 37′ 00″ E. a distance of 30.00′ to a 5/8″ rebar set;

2. Thence, S. 87° 37′ 00″ E. a distance of 143.93′ to a 5/8″ rebar set;

3. Thence, S. 21° 41′ 47″ W. a distance of 31.79′ to a 5/8″ rebar found;

4. Thence, S. 22° 11′ 20″ W. a distance of 72.48′ to a 5/8″ rebar set;

5. Thence, S. 16° 02′ 04″ W. a distance of 110.11' to 5/8″ rebar set;

6. Thence, N. 87° 46′ 04″ W. a distance of 82.84′ to a 5/8″ rebar set;

7. Thence, N. 87° 46′ 04″ W. a distance of 17.59′ to a concrete monument found;

8. Thence, N. 87° 46′ 04″ W. a distance of 12.41′ to the True Point of Beginning, containing 0.662 acres, more or less, and is subject to all easements, rights-of-way, or restrictions, whether recorded or implied.

Bearings are based on Plat Book 3, page 42 and are for angular calculations only.

Surveys by: R. Scott Johnson, James V. Gute, Rolland L. Marx.

Description and plat by Alan Donaker, Professional Surveyor, #8050, from a survey of the premises on June 25, in the year of our Lord Two Thousand Nine. REVISED August 25, 2009.

Issued in Romulus, Michigan on March 31, 2011.

John L. Mayfield Jr.,

Manager, Detroit Airports District Office, FAA, Great Lakes Region.

[FR Doc. 2011–10812 Filed 5–3–11; 8:45 am]

BILLING CODE 4910–13–P

DEPARTMENT OF THE TREASURY

Office of Foreign Assets Control

Additional Designations, Foreign Narcotics Kingpin Designation Act

AGENCY: Office of Foreign Assets Control, Treasury.

ACTION: Notice.

SUMMARY: The Treasury Department's Office of Foreign Assets Control ("OFAC") is publishing the names of two individuals and one entity whose property and interests in property have been blocked pursuant to the Foreign Narcotics Kingpin Designation Act ("Kingpin Act") (21 U.S.C. 1901–1908, 8 U.S.C. 1182).

DATES: The designation by the Director of OFAC of the two individuals and one entity identified in this notice pursuant to section 805(b) of the Kingpin Act is effective on April 28, 2011.

FOR FURTHER INFORMATION CONTACT: Assistant Director, Compliance Outreach & Implementation, Office of Foreign Assets Control, Department of the Treasury, Washington, DC 20220, tel.: (202) 622–2490.

SUPPLEMENTARY INFORMATION:

Electronic and Facsimile Availability

This document and additional information concerning OFAC are available on OFAC's Web site (*http://www.treasury.gov/ofac*) or via facsimile through a 24-hour fax-on-demand service, tel.: (202) 622–0077.

Background

The Kingpin Act became law on December 3, 1999. The Kingpin Act establishes a program targeting the activities of significant foreign narcotics traffickers and their organizations on a worldwide basis. It provides a statutory framework for the President to impose sanctions against significant foreign narcotics traffickers and their organizations on a worldwide basis, with the objective of denying their businesses and agents access to the U.S. financial system and the benefits of trade and transactions involving U.S. companies and individuals.

The Kingpin Act blocks all property and interests in property, subject to U.S. jurisdiction, owned or controlled by significant foreign narcotics traffickers as identified by the President. In addition, the Secretary of the Treasury, in consultation with the Attorney General, the Director of the Central Intelligence Agency, the Director of the Federal Bureau of Investigation, the Administrator of the Drug Enforcement Administration, the Secretary of Defense, the Secretary of State, and the Secretary of Homeland Security when designating and blocking the property and interests in property, subject to U.S. jurisdiction, of foreign persons who are found to be: (1) Materially assisting in, or providing financial or technological support for or to, or providing goods or services in support of, the international

narcotics trafficking activities of a person designated pursuant to the Kingpin Act; (2) owned, controlled, or directed by, or acting for or on behalf of, a person designated pursuant to the Kingpin Act; or (3) playing a significant role in international narcotics trafficking.

On April 28, 2011, the Director of OFAC designated two individuals and one entity whose property and interests in property are blocked pursuant to section 805(b) of the Foreign Narcotics Kingpin Designation Act.

The list of additional designees is as follows:

1. SHAYESTEH, Bahram Ali (a.k.a. JADALI, Bahrami Ali; a.k.a. SHAYESTEH, Bahrami Ali), 80331 Muenchen, Bayern, Germany; DOB 6 May 1963; alt. DOB 6 Aug 1963; alt. DOB 13 Jun 1958; POB Tehran, Iran (individual) [SDNTK]
2. OEZER–SHAYESTEH, Guelin, 80331 Muenchen, Bayern, Germany; DOB 15 Feb 1962; citizen Germany (individual) [SDNTK]
3. INTERCONTINENTAL BAUMASCHINEN UND NUTZFAHRZEUGE HANDELS GMBH (a.k.a. INTERCONTINENTAL BAUMASCHINEN), Noerdliche Auffahrtsallee 13, 80638, Muenchen, Bayern, Germany; Klugstrasse 71, 80637, Munich, Germany; Business Registration Document #HRB147158 [SDNTK]

Dated: April 28, 2011.

Adam J. Szubin,

Director, Office of Foreign Assets Control.

[FR Doc. 2011–10785 Filed 5–3–11; 8:45 am]

BILLING CODE 4810–AL–P

DEPARTMENT OF THE TREASURY

Office of Foreign Assets Control

Unblocking of Specially Designated Nationals and Blocked Persons Pursuant to the Foreign Narcotics Kingpin Designation Act

AGENCY: Office of Foreign Assets Control, Treasury.

ACTION: Notice.

SUMMARY: The Department of the Treasury's Office of Foreign Assets Control ("OFAC") is publishing the name of one individual whose property and interests in property have been unblocked pursuant to the Foreign Narcotics Kingpin Designation Act ("Kingpin Act") (21 U.S.C. 1901–1908, 8 U.S.C. 1182).

DATES: The unblocking and removal from the list of Specially Designated Nationals and Blocked Persons ("SDN List") of the individual identified in this notice whose property and interests in property were blocked pursuant to the Kingpin Act is effective on April 28, 2011.

FOR FURTHER INFORMATION CONTACT: Assistant Director, Compliance Outreach & Implementation, Office of Foreign Assets Control, U.S. Department of the Treasury, 1500 Pennsylvania Avenue, NW., Washington, DC 20220, Tel.: (202) 622–2420.

SUPPLEMENTARY INFORMATION:

Electronic and Facsimile Availability

This document and additional information concerning OFAC are available from OFAC's Web site (*http://www.treasury.gov/ofac*) or via facsimile through a 24-hour fax-on-demand service at (202) 622–0077.

Background

The Kingpin Act became law on December 3, 1999. The Act provides a statutory framework for the President to impose sanctions against significant foreign narcotics traffickers and their organizations on a worldwide basis, with the objective of denying their businesses and agents access to the U.S. financial system and to the benefits of trade and transactions involving U.S. persons and entities.

The Kingpin Act blocks all property and interests in property, subject to U.S. jurisdiction, owned or controlled by significant foreign narcotics traffickers as identified by the President. In addition, the Secretary of the Treasury consults with the Attorney General, the Director of the Central Intelligence Agency, the Director of the Federal Bureau of Investigation, the Administrator of the Drug Enforcement Administration, the Secretary of Defense, the Secretary of State, and the Secretary of Homeland Security when designating and blocking the property or interests in property, subject to U.S. jurisdiction, of foreign persons found to be: (1) Materially assisting in, or providing financial or technological support for or to, or providing goods or services in support of, the international narcotics trafficking activities of a person designated pursuant to the Kingpin Act; (2) owned, controlled, or directed by, or acting for or on behalf of, a person designated pursuant to the Kingpin Act; or (3) playing a significant role in international narcotics trafficking.

On April 28, 2011, OFAC removed from the SDN List the individual listed below, whose property and interests in property were blocked pursuant to the Kingpin Act:

GALINDO LEYVA, Esperanza, 536 Huerto Place, Chula Vista, CA 91910; 950 Norella Street, Chula Vista, CA 91910; c/o INMOBILIARIA LA PROVINCIA S.A. DE C.V., Tijuana, Baja California, Mexico; c/o COMPLEJO TURISTICO OASIS, S.A. de C.V., Playas de Rosarito, Rosarito, Baja California, Mexico; c/o PLAYA MAR S.A. DE C.V., Tijuana, Baja California, Mexico; DOB 16 Aug 1920; POB San Ignacio, Sinaloa, Mexico; Passport 99020017901 (Mexico); R.F.C. #GALE–200816–6IA (Mexico); alt. R.F.C. #GALE–241004–61A (Mexico) (individual) [SDNTK]

Dated: April 28, 2011.

Adam J. Szubin,

Director, Office of Foreign Assets Control.

[FR Doc. 2011–10781 Filed 5–3–11; 8:45 am]

BILLING CODE 4810–AL–P

DEPARTMENT OF THE TREASURY

Office of Foreign Assets Control

Additional Designations, Foreign Narcotics Kingpin Designation Act

AGENCY: Office of Foreign Assets Control, Treasury.

ACTION: Notice.

SUMMARY: The Treasury Department's Office of Foreign Assets Control ("OFAC") is publishing the names of one individual and two entities whose property and interests in property have been blocked pursuant to the Foreign Narcotics Kingpin Designation Act ("Kingpin Act") (21 U.S.C. 1901–1908, 8 U.S.C. 1182). In addition, OFAC is publishing additions to the identifying information associated with one individual and one entity previously designated pursuant to the Kingpin Act.

DATES: The designation by the Director of OFAC of the one individual and two entities identified in this notice pursuant to section 805(b) of the Kingpin Act is effective on April 28, 2011.

FOR FURTHER INFORMATION CONTACT: Assistant Director, Compliance Outreach & Implementation, Office of Foreign Assets Control, Department of the Treasury, Washington, DC 20220, tel.: 202/622–2490.

SUPPLEMENTARY INFORMATION:

Electronic and Facsimile Availability

This document and additional information concerning OFAC are available on OFAC's Web site (*http://www.treasury.gov/ofac*) or via facsimile through a 24-hour fax-on-demand service, tel.: (202) 622–0077.

Background

The Kingpin Act became law on December 3, 1999. The Kingpin Act establishes a program targeting the activities of significant foreign narcotics traffickers and their organizations on a worldwide basis. It provides a statutory framework for the President to impose sanctions against significant foreign narcotics traffickers and their organizations on a worldwide basis, with the objective of denying their businesses and agents access to the U.S. financial system and the benefits of trade and transactions involving U.S. companies and individuals.

The Kingpin Act blocks all property and interests in property, subject to U.S. jurisdiction, owned or controlled by significant foreign narcotics traffickers as identified by the President. In addition, the Secretary of the Treasury consults with the Attorney General, the Director of the Central Intelligence Agency, the Director of the Federal Bureau of Investigation, the Administrator of the Drug Enforcement Administration, the Secretary of Defense, the Secretary of State, and the Secretary of Homeland Security when designating and blocking the property and interests in property, subject to U.S. jurisdiction, of foreign persons who are found to be: (1) Materially assisting in, or providing financial or technological support for or to, or providing goods or services in support of, the international narcotics trafficking activities of a person designated pursuant to the Kingpin Act; (2) owned, controlled, or directed by, or acting for or on behalf of, a person designated pursuant to the Kingpin Act; or (3) playing a significant role in international narcotics trafficking.

On April 28, 2011, the Director of OFAC designated one individual and two entities whose property and interests in property are blocked pursuant to section 805(b) of the Foreign Narcotics Kingpin Designation Act.

The list of additional designees is as follows:

Individual

1. LLANOS GAZIA, Jorge Luis (a.k.a. LLANOS GAZZIA, Jorge Luis), c/o AUDIO ALARMAS, S.A. DE C.V., Zapopan, Jalisco, Mexico; c/o BASALTOS TONALA, S.A. DE C.V., Tonala, Jalisco, Mexico; Asuncion No. 747 Int. 702, Providencia, Guadalajara, Jalisco C.P. 44630, Mexico; Avenida Lomas del Bosque No. 2700–42, Zapopan, Jalisco, Mexico; Calle Palmas No. 42, Colonia Lomas del Bosque, Zapopan, Jalisco C.P. 45110, Mexico; Jamundi, Colombia; DOB 20 Jun 1957; POB Cali, Colombia; C.U.R.P. LAGJ570620HNELZR00 (Mexico); Cedula No. 16446807 (Colombia); Credencial electoral LLGZJR57062088H900 (Mexico); R.F.C. LAGJ570620KV4 (Mexico); citizen Colombia; alt. citizen Mexico; nationality Italy (individual) [SDNTK]

Entities

1. AUDIO ALARMAS, S.A. DE C.V., Calle Paseo de los Tilos No. 1344, Colonia Tabachines, Zapopan, Jalisco C.P. 45188, Mexico; Paseo de los Tilos No. 1344 A, Col. Rancho Blanco, Guadalajara, Jalisco C.P. 44890, Mexico; Folio Mercantil No. 10987–1 (Mexico); R.F.C. AAL9802259P1 (Mexico) [SDNTK]
2. BASALTOS TONALA, S.A. DE C.V., Camino a Colimilla Km. 6, Colonia San Gaspar, Tonala, Jalisco C.P. 45404, Mexico; Zona Metropolitana, Guadalajara, Jalisco, Mexico; Folio Mercantil No. 24808 (Mexico); R.F.C. BTO041104AH2 (Mexico) [SDNTK]

In addition, OFAC has made additions to the identifying information associated with the following individual and entity previously designated pursuant to the Kingpin Act:

1. REYES GARZA, Agustin (a.k.a. "DON PILO"), c/o ESTETIC CARR DE OCCIDENTE, S.A. DE C.V., Guadalajara, Mexico; c/o ESTETICA CAR WASH S.A. DE C.V., Zapopan, Jalisco, Mexico; Calle Violetas No. 371, Colonia Las Bodegas, Zapopan, Jalisco, Mexico; DOB 21 Aug 1957; POB Guadalajara, Jalisco, Mexico; (individual) [SDNTK]
2. ESTETIC CARR DE OCCIDENTE, S.A. DE C.V., Zapopan, Jalisco, Mexico; Matricula Mercantil No. 48131–1 (Mexico) issued 08 May 2009; [SDNTK]

The listings for this individual and entity now appear as follows:

1. REYES GARZA, Agustin (a.k.a. "DON PILO"), c/o ESTETIC CARR DE OCCIDENTE, S.A. DE C.V., Guadalajara, Mexico; c/o ESTETICA CAR WASH S.A. DE C.V., Zapopan, Jalisco, Mexico; Calle Comercio No. 50, Colonia Escandon, Delegacion Miguel Hidalgo, Mexico City, Distrito Federal C.P. 11800, Mexico; Calle Milpa No. 87, Colonia El Vigia, Zapopan, Jalisco C.P. 45100, Mexico; Calle Persianas No. 204, Colonia Pensador Mexicano, Delegacion Venustiano Carranza, Mexico City, Distrito Federal C.P. 15510, Mexico; Calle Violetas No. 371, Colonia Las Bodegas, Zapopan, Jalisco, Mexico; DOB 21 Aug 1957; POB Guadalajara, Jalisco, Mexico; alt. POB Tamaulipas, Mexico; R.F.C. REGA570821RCA (Mexico) (individual) [SDNTK]
2. ESTETIC CARR DE OCCIDENTE, S.A. DE C.V., Periferico Norte No. 3109, Colonia Tabachines, Zapopan, Jalisco C.P. 45188, Mexico; Matricula Mercantil No. 48131–1 (Mexico) issued 08 May 2009; R.F.C. ECO090403GS9 (Mexico) [SDNTK]

Dated: April 28, 2011.

Adam J. Szubin,

Director, Office of Foreign Assets Control.

[FR Doc. 2011–10779 Filed 5–3–11; 8:45 am]

BILLING CODE 4810–AL–P

DEPARTMENT OF THE TREASURY

Office of Foreign Assets Control

Additional Designations, Foreign Narcotics Kingpin Designation Act

AGENCY: Office of Foreign Assets Control, Treasury.

ACTION: Notice.

SUMMARY: The Treasury Department's Office of Foreign Assets Control ("OFAC") is updating the public listing of four entities whose property and interests in property are blocked pursuant to the Foreign Narcotics Kingpin Designation Act ("Kingpin Act") (21 U.S.C. 1901–1908, 8 U.S.C. 1182). These entities were previously Blocked Pending Investigation and their listings will be updated to Blocked pursuant to the Kingpin Act.

DATES: The identification as blocked by the Director of OFAC of the four entities in this notice, pursuant to section 805(b) of the Kingpin Act, is effective on April 28, 2011.

FOR FURTHER INFORMATION CONTACT: Assistant Director, Compliance Outreach & Implementation, Office of Foreign Assets Control, Department of the Treasury, Washington, DC 20220, tel.: 202/622–2490.

SUPPLEMENTARY INFORMATION:

Electronic and Facsimile Availability

This document and additional information concerning OFAC are available on OFAC's Web site (*http://www.treasury.gov/ofac*) or via facsimile through a 24-hour fax-on demand service, tel.: (202) 622–0077.

Background

The Kingpin Act became law on December 3, 1999. The Kingpin Act establishes a program targeting the activities of significant foreign narcotics

traffickers and their organizations on a worldwide basis with the objective of denying their businesses and agents access to the U.S. financial system and to the benefits of trade and transactions involving U.S. companies and individuals.

The Kingpin Act blocks all property and interests in property, subject to U.S. jurisdiction, owned or controlled by significant foreign narcotics traffickers as identified by the President. In addition, the Secretary of the Treasury, in consultation with the Attorney General, the Director of the Central Intelligence Agency, the Director of the Federal Bureau of Investigation, the Administrator of the Drug Enforcement Administration, the Secretary of Defense, the Secretary of State, and the Secretary of Homeland Security, may designate and block the property and interests in property, subject to U.S. jurisdiction, of foreign persons he determines to be: (1) Materially assisting in, or providing financial or technological support for or to, or providing goods or services in support of, the international narcotics trafficking activities of a person designated pursuant to the Kingpin Act; (2) owned, controlled, or directed by, or acting for or on behalf of, a person designated pursuant to the Kingpin Act; or (3) playing a significant role in international narcotics trafficking.

On April 28, 2011, the Director of OFAC determined that the four entities identified in this notice that were previously Blocked Pending Investigation are Blocked pursuant to section 805(b) of the Kingpin Act.

OFAC has made changes to the listings of the following four entities which were previously Blocked Pending Investigation pursuant to the Kingpin Act:

1. IAC INTERNATIONAL INC. (a.k.a. I A C INTERNATIONAL INC.; a.k.a. INTERNATIONAL AIRLINE CONSULTING); 8940 NW 24 Terrace, Miami, FL 33122; Business Registration Document #P9800004558 (United States); US FEIN 65–0842701 [BPI–SDNTK]
2. AERO CONTINENTE (USA) INC. (a.k.a. AERO CONTINENTE, Inc.), 2858 NW 79 Avenue, Miami, FL 33122; Business Registration Document #P94000013372 (United States); US FEIN 65–0467983 [BPI–SDNTK]
3. CARGO AIRCRAFT LEASING CORP., 2310 NW 55th Court, Ft. Lauderdale, FL 33309; Business Registration Document #93000004034 (United States); US FEIN 65–0389435 [BPI–SDNTK]
4. INTERNATIONAL PACIFIC TRADING, INC., 2858 NW 79 Avenue, Miami, FL; US FEIN 65–0315268 (United States); Business Registration Document #V16155 (United States); US FEIN 65–0315268 [BPI–SDNTK]

The listings for these four entities have been updated to Blocked and appear as follows:

1. IAC INTERNATIONAL INC. (a.k.a. I A C INTERNATIONAL INC.; a.k.a. INTERNATIONAL AIRLINE CONSULTING); Miami, FL; Business Registration Document #P9800004558 (United States); US FEIN 65–0842701 [SDNTK]
2. AERO CONTINENTE (USA) INC. (a.k.a. AERO CONTINENTE, INC.), Miami, FL; Business Registration Document #P94000013372 (United States); US FEIN 65–0467983 [SDNTK]
3. CARGO AIRCRAFT LEASING CORP., Ft. Lauderdale, FL; Business Registration Document #93000004034 (United States); US FEIN 65–0389435 [SDNTK]
4. INTERNATIONAL PACIFIC TRADING, INC., Miami, FL; Business Registration Document #V16155 (United States); US FEIN 65–0315268 [SDNTK]

Dated: April 28, 2011.

Adam J. Szubin,

Director, Office of Foreign Assets Control.

[FR Doc. 2011–10786 Filed 5–3–11; 8:45 am]

BILLING CODE 4811–45–P

DEPARTMENT OF THE TREASURY

Office of Foreign Assets Control

Unblocking of Specially Designated Nationals and Blocked Persons Pursuant to Executive Order 12978

AGENCY: Office of Foreign Assets Control, Treasury.

ACTION: Notice.

SUMMARY: The U.S. Department of the Treasury's Office of Foreign Assets Control ("OFAC") is publishing the names of six individuals whose property and interests in property have been unblocked pursuant to Executive Order 12978 of October 21, 1995, *Blocking Assets and Prohibiting Transactions With Significant Narcotics Traffickers.*

DATES: The unblocking and removal from the list of Specially Designated Nationals and Blocked Persons ("SDN List") of the six individuals identified in this notice whose property and interests in property were blocked pursuant to Executive Order 12978 of October 21, 1995, is effective on April 28, 2011.

FOR FURTHER INFORMATION CONTACT: Assistant Director, Compliance Outreach & Implementation, Office of Foreign Assets Control, Department of the Treasury, Washington, DC 20220, tel.: 202/622–2490.

SUPPLEMENTARY INFORMATION:

Electronic and Facsimile Availability

This document and additional information concerning OFAC are available from OFAC's Web site (*http://www.treasury.gov/ofac*) or via facsimile through a 24-hour fax-on demand service at (202) 622–0077.

Background

On October 21, 1995, the President, invoking the authority, *inter alia,* of the International Emergency Economic Powers Act (50 U.S.C. 1701–1706) ("IEEPA"), issued Executive Order 12978 (60 FR 54579, October 24, 1995) (the "Order"). In the Order, the President declared a national emergency to deal with the threat posed by significant foreign narcotics traffickers centered in Colombia and the harm that they cause in the United States and abroad.

Section 1 of the Order blocks, with certain exceptions, all property and interests in property that are in the United States, or that hereafter come within the United States or that are or hereafter come within the possession or control of United States persons, of: (1) The foreign persons listed in an Annex to the Order; (2) any foreign person determined by the Secretary of Treasury, in consultation with the Attorney General and the Secretary of State: (a) to play a significant role in international narcotics trafficking centered in Colombia; or (b) to materially assist in, or provide financial or technological support for or goods or services in support of, the narcotics trafficking activities of persons designated in or pursuant to the Order; and (3) persons determined by the Secretary of the Treasury, in consultation with the Attorney General and the Secretary of State, to be owned or controlled by, or to act for or on behalf of, persons designated pursuant to the Order.

On April 28, 2011, the Director of OFAC removed from the SDN List the six individuals listed below, whose property and interests in property were blocked pursuant to the Order:

AVILA GONZALEZ, Humberto, c/o ADMINISTRADORA DE SERVICIOS VARIOS CALIMA S.A., Cali, Colombia; c/o CHAMARTIN S.A., Cali, Colombia; DOB 2 Apr 1960;

Cedula No. 14882052 (Colombia); Passport 14882052 (Colombia) (individual) [SDNT]

IDARRAGA RIOS, Andres Felipe, c/o 2000–DODGE S.L., Madrid, Spain; c/o 2000 DOSE E.U., Cali, Colombia; C Y S MEDIOS E.U., Cali, Colombia; Cedula No. 16274109 (Colombia); Passport 16274109 (Colombia) (individual) [SDNT]

MILLAN BONILLA, German, c/o CONSTRUVIDA S.A., Cali, Colombia; DOB 1 Feb 1952; Cedula No. 14995885 (Colombia) (individual) [SDNT]

PARRA VELASCO, Edwin Hiulder, Calle 55BN No. 2FN–77, Cali, Colombia; c/o PARQUE INDUSTRIAL PROGRESO S.A., Yumbo, Colombia; DOB 18 Apr 1961; POB Cali, Valle, Colombia; Cedula No. 16672814 (Colombia); Passport 16672814 (Colombia) (individual) [SDNT]

QUINTANA HERNANDEZ, Gonzalo, c/o DISTRIBUIDORA DE DROGAS LA REBAJA BOGOTA S.A., Bogota, Colombia; c/o GRACADAL S.A., Cali, Colombia; c/o POLIEMPAQUES LTDA., Bogota, Colombia; c/o ALERO S.A., Cali, Colombia; Cedula No. 16603939 (Colombia) (individual) [SDNT]

SALINAS CUEVAS, Jorge Rodrigo, c/o DISDROGAS LTDA., Yumbo, Valle, Colombia; Calle 13B No. 37–86 apt. 201–5, Cali, Colombia; DOB 10 Dec 1945; POB Neiva, Huila, Colombia; alt. POB Cali, Colombia; Cedula No. 14930332 (Colombia); Passport AG684621 (Colombia) (individual) [SDNT]

Dated: April 28, 2011.

Adam J. Szubin,

Director, Office of Foreign Assets Control.

[FR Doc. 2011–10787 Filed 5–3–11; 8:45 am]

BILLING CODE 4810–AL–P

DEPARTMENT OF VETERANS AFFAIRS

Privacy Act of 1974

AGENCY: Department of Veterans Affairs (VA).

ACTION: Notice of Amendment to System of Records.

SUMMARY: The Privacy Act of 1974 (5 U.S.C. 552a(e)(4)) requires that all agencies publish in the **Federal Register** a notice of the existence and character of their system of records. Notice is hereby given that VA is amending the system of records entitled "Consolidated Data Information System-VA" (97VA105) as set forth in the **Federal Register** 72 FR 46130–46133 dated August 16, 2007. VA is amending the system by revising the System Location, Categories of Records in the System, Purpose, Routine Uses of Records Maintained in the System, Record Source Category, and Appendix 5. VA is republishing the system notice in its entirety.

DATES: Comments on the amendment of this system of records must be received no later than June 3, 2011. If no public comment is received, the amended system will become effective June 3, 2011.

ADDRESSES: Written comments may be submitted through *http://www.Regulations.gov* by mail or hand-delivery to Director, Regulations Management (02REG), Department of Veterans Affairs, 810 Vermont Avenue, NW., Room 1068, Washington, DC 20420; or by fax to (202) 273–9026. Comments received will be available for public inspection in the Office of Regulation Policy and Management, Room 1063B, between the hours of 8 a.m. and 4:30 p.m., Monday through Friday (except holidays). Please call (202) 461–4902 (this is not a toll-free number) for an appointment. In addition, during the comment period, comments may be viewed online through the Federal Docket Management System (FDMS) at *http://www.Regulations.gov*.

FOR FURTHER INFORMATION CONTACT: Stephania Griffin, Veterans Health Administration (VHA) Privacy Officer (19F2), Department of Veterans Affairs, 810 Vermont Avenue, NW., Washington, DC 20420, (704) 245–2492.

SUPPLEMENTARY INFORMATION: Under § 527 of title 38, U.S.C., and the Government Performance and Results Act of 1993, Public Law 103–62, VA is required to measure and evaluate, on an ongoing basis, the effectiveness of VA benefit programs and services. In performing this required function, VA must collect, collate and analyze full statistical data regarding participation, provision of services, categories of beneficiaries, and planning of expenditures for all VA programs. This combined database is necessary for the Veterans Health Administration (VHA) to accurately and timely assess the current health care usage by the patient population served by VA, to forecast future demand for VA medical care by individuals currently eligible for service by VA medical facilities, and to understand the numerous implications of cross-usage between VA and non-VA health care systems.

As VA has widened its scope of the Centers for Medicare and Medicaid Services (CMS) data usage and further centralized the source of data in order to improve efficiency and protect privacy/security of data elements, it was necessary to implement changes to the management and use of these records. A summary of these changes follows:

1. The purpose of this system of records has been revised to add the need to use the records and information for evaluation of Department programs, and for research as defined by Common Rule.

2. The records will be retained at the site listed in Appendix 5.

3. Under Categories of Records information from the Persian Gulf registry has been added and the types of CMS records maintained now includes health care utilization, demographic, enrollment, and survey/assessment files including veteran and non-veteran data. In addition, information on veterans enrolled for VA health care who have participated in the periodic "VHA Survey of Veteran Enrollees' Health and Reliance Upon VA" is now included in the system. Additional data includes: Civilian Health and Medical Program of the Department of Veterans Affairs (CHAMPVA); VA/DOD Identity Repository (VADIR), as well as the OEF/OIF roster (Defense Manpower Data Center); and United States Renal Data System (USRDS).

4. System Manager and Address was updated to reflect: Manager, Medicare and Medicaid Analysis Center, 100 Grandview Rd., Suite 114, Braintree, MA 02184.

Under section 264, Subtitle F of Title II of the Health Insurance Portability and Accountability Act of 1996 (HIPAA) Public Law 104–191, 100 Stat. 1936, 2033–34 (1996), the Department of Health and Human Services (HHS) published a final rule, as amended, establishing Standards for Privacy of Individually-Identifiable Health Information, 45 CFR parts 160 and 164. VHA may not disclose individually-identifiable health information (as defined in HIPAA and the Privacy Rule, 42 U.S.C. 1320(d)(6) and 45 CFR 164.501) pursuant to a routine use unless either: (a) the disclosure is required by law, or (b) the disclosure is also permitted or required by the HHS Privacy Rule. The disclosures of individually-identifiable health information contemplated in the routine uses published in this amended system of records notice are permitted under the Privacy Rule or required by law. However, to also have authority to make such disclosures under the Privacy Act, VA must publish these routine uses. Consequently, VA is adding a preliminary paragraph to the routine

uses portion of the system of records notice stating that any disclosure pursuant to the routine uses in this system of records notice must be either required by law or permitted by the Privacy Rule before VHA may disclosed the covered information. VA is also proposing to add the following routine use disclosure of information maintained in the system:

• Routine use 8 was added. The record of an individual who is covered by a system of records may be disclosed to a Member of Congress, or a staff person acting for the member, when the member or staff person requests the record on behalf of and at the written request of the individual.

• Routine use 9 was added. Disclosure to other Federal agencies may be made to assist such agencies in preventing and detecting possible fraud or abuse by individuals in their operations and programs.

• Routine use 10 was added. Disclosure to the Equal Employment Opportunity Commission when requested in connection with investigations of alleged or possible discrimination practices, examinations of Federal affirmative employment programs, compliance with the Uniform Guidelines of Employee Selection Procedures, or other functions of the Commission as authorized by law or regulation.

• Routine use 11 was added. Disclosure to a former VA employee or contractor, as well as the authorized representative of a current or former employee or contractor of VA in proceedings before the Merit Systems Protection Board or the Office of the Special Counsel in connection with appeals, special studies of the civil service and other merit systems, review of rules and regulations, investigation of alleged or possible prohibited personnel practices, and such other functions promulgated in 5 U.S.C. 1205 and 1206, or as otherwise authorized by law.

• Routine use 12 was added. Disclosure to the Federal Labor Relations Authority, including its General Counsel, information related to the establishment of jurisdiction, investigation, and resolution of allegations of unfair labor practices, or in connection with the resolution of exceptions to arbitration awards when a question of material fact is raised in matters before the Federal Service Impasses Panel.

The Privacy Act permits VA to disclose information about individuals without their prior written consent for a routine use when the information will be used for a purpose that is compatible with the purpose for which we collected the information. In all of the routine use disclosures described above, the recipient of the information will use the information in connection with a matter relating to one of VA's programs, and will use the information to provide a benefit to VA, or disclosure is required by law.

The Report of Intent to Publish an Amended System of Records Notice and an advance copy of the system notice have been sent to the appropriate Congressional committees and to the Director of Office of Management and Budget (OMB) as required by 5 U.S.C. 552a(r) (Privacy Act) and guidelines issued by OMB (65 FR 77677), December 12, 2000.

Approved: March 30, 2011.

John R. Gingrich,

Chief of Staff, Department of Veterans Affairs.

97VA105

SYSTEM NAME:

"Consolidated Data Information System-VA".

SYSTEM LOCATION(S):

Records will be maintained at Department of Veteran Affairs (VA) Veterans Health Administration (VHA) sites for the Centers for Medicare & Medicaid Services (CMS) data (see VA Appendix 5).

CATEGORIES OF INDIVIDUALS COVERED BY THE SYSTEM:

Records include information concerning veterans, their spouses and their dependents, family members, active duty military personnel, and individuals who are not VA beneficiaries, but who receive health care services from VHA.

CATEGORIES OF RECORDS IN THE SYSTEM:

Categories of records in the system will include veterans' names, addresses, dates of birth, VA claim numbers, social security numbers (SSNs), and military service information, medical benefit application and eligibility information, code sheets and follow-up notes, sociological, diagnostic, counseling, rehabilitation, drug and alcohol, dietetic, medical, surgical, dental, psychological, and/or psychiatric medical information, prosthetic, pharmacy, nuclear medicine, social work, clinical laboratory and radiology information, patient scheduling information, family information such as next of kin, spouse and dependents" names, addresses, social security numbers and dates of birth, family medical history, employment information, financial information, third-party health plan information, information related to registry systems, date of death, VA claim and insurance file numbers, travel benefits information, military decorations, disability or pension payment information, amount of indebtedness arising from 38 U.S.C. benefits, applications for compensation, pension, education and rehabilitation benefits, information related to incarceration in a penal institution, medication profile such as name, quantity, prescriber, dosage, manufacturer, lot number, cost and administration instruction, pharmacy dispensing information such as pharmacy name and address.

The records will include information on Medicare beneficiaries from CMS databases including: health care usage, demographic, enrollment, and survey/assessment files including veteran and non-veteran data.

The records include information on Medicaid beneficiaries" utilization and enrollment from state databases.

The records include information on veterans enrolled for VA health care who have participated in the periodic "VHA Survey of Veteran Enrollees" Health and Reliance Upon VA."

The records also include information on: Civilian Health and Medical Program of the Department of Veterans Affairs (CHAMPVA), VA/DOD Identity Repository (VADIR), as well as the OEF/OIF roster (Defense Manpower Data Center), and United States Renal Data System (USRDS).

AUTHORITY FOR MAINTENANCE OF THE SYSTEM:

Section 527 of 38 U.S.C. and the Government Performance and Results Act of 1993, Public Law 103–62.

PURPOSE(S):

The purpose of this system of records is to conduct statistical studies and analyses which will support the formulation of Departmental policies and plans by identifying the total current health care usage of the VA patient population. The records and information may be used by VA in evaluation of Department programs. The information may be used to conduct research.

ROUTINE USES OF RECORDS MAINTAINED IN THE SYSTEM, INCLUDING CATEGORIES OF USERS AND THE PURPOSE OF SUCH USES:

VA may disclose protected health information pursuant to the following routine uses where required by law, or required or permitted by 45 CFR parts 160 and 164.

1. VA may disclose on its own initiative any information in this system, except the names and home addresses of veterans and their

dependents, which is relevant to a suspected or reasonably imminent violation of law, whether civil, criminal or regulatory in nature and whether arising by general or program statute or by regulation, rule or order issued pursuant thereto, to a Federal, State, local, Tribal, or foreign agency charged with the responsibility of investigating or prosecuting such violation, or charged with enforcing or implementing the statute, regulation, rule or order. On its own initiative, VA may also disclose the names and addresses of veterans and their dependents to a Federal agency charged with the responsibility of investigating or prosecuting civil, criminal or regulatory violations of law, or charged with enforcing or implementing the statute, regulation, rule or order issued pursuant thereto.

2. Disclosure may be made, excluding name and address (unless name and address are furnished by the requestor) for research purposes determined to be necessary and proper to epidemiological and other research facilities approved by the System Manager or the Under Secretary for Health, or designee.

3. Any record in the system of records may be disclosed to a Federal agency for the conduct of research and data analysis to perform a statutory purpose of that Federal agency upon the prior written request of that agency, provided that there is legal authority under all applicable confidentiality statutes and regulations to provide the data and VHA Medicare and Medicaid Analysis Center (MAC) has determined prior to the disclosure that VA data handling requirements are satisfied. MAC may disclose limited individual identification information to another Federal agency for the purpose of matching and acquiring information held by that agency for MAC to use for the purposes stated for this system of records.

4. Disclosure may be made to National Archives and Records Administration (NARA), General Services Administration (GSA) in records management inspections conducted under authority of 44 U.S.C.

5. VA may disclose information in this system of records to the Department of Justice (DoJ), either on VA's initiative or in response to DoJ's request for the information, after either VA or DoJ determines that such information is relevant to DoJ's representation of the United States or any of its components in legal proceedings before a court or adjudicative body, provided that, in each case, the agency also determines prior to disclosure that disclosure of the records to the Department of Justice is a use of the information contained in the records that is compatible with the purpose for which VA collected the records. VA, on its own initiative, may disclose records in this system of records in legal proceedings before a court or administrative body after determining that the disclosure of the records to the court or administrative body is a use of the information contained in the records that is compatible with the purpose for which VA collected the records.

6. Disclosure may be made to individuals, organizations, private or public agencies, or other entities or individuals with whom VA has a contract or agreement to perform such services as VA may deem practicable for the purposes of laws administered by VA, in order for the contractor, subcontractor, public or private agency, or other entity or individual with whom VA has an agreement or contract to perform the services of the contract or agreement. This routine use includes disclosures by the individual or entity performing the service for VA to any secondary entity or individual to perform an activity that is necessary for individuals, organizations, private or public agencies, or other entities or individuals with whom VA has a contract or agreement to provide the service to VA.

7. Any records may be disclosed to appropriate agencies, entities, and persons under the following circumstances: when (1) it is suspected or confirmed that the security or confidentiality of information in the system of records has been compromised; (2) the Department has determined that as a result of the suspected or confirmed compromise there is a risk of embarrassment or harm to the reputations of the record subjects, harm to economic or property interests, identity theft or fraud, or harm to the security or integrity of this system or other systems or programs (whether maintained by the Department or another agency or entity) that rely upon the compromised information; and (3) the disclosure is made to such agencies, entities, and persons who are reasonably necessary to assist in connection with the Department's efforts to respond to the suspected or confirmed compromise and prevent, minimize, or remedy such harm.

8. The record of an individual who is covered by a system of records may be disclosed to a Member of Congress, or a staff person acting for the member, when the member or staff person requests the record on behalf of and at the written request of the individual.

9. Disclosure to other Federal agencies may be made to assist such agencies in preventing and detecting possible fraud or abuse by individuals in their operations and programs.

10. VA may disclose information to the Equal Employment Opportunity Commission when requested in connection with investigations of alleged or possible discrimination practices, examinations of Federal affirmative employment programs, compliance with the Uniform Guidelines of Employee Selection Procedures, or other functions of the Commission as authorized by law or regulation.

11. VA may disclose information to a former VA employee or contractor, as well as the authorized representative of a current or former employee or contractor of VA, in proceedings before the Merit Systems Protection Board or the Office of the Special Counsel in connection with appeals, special studies of the civil service and other merit systems, review of rules and regulations, investigation of alleged or possible prohibited personnel practices, and such other functions promulgated in 5 U.S.C. 1206, or as otherwise authorized by law.

12. VA may disclose to the Federal Labor Relations Authority, including its General Counsel, information related to the establishment of jurisdiction, investigation, and resolution of allegations of unfair labor practices, or in connection with the resolution of exceptions to arbitration awards when a question of material fact is raised in matters before the Federal Service Impasses Panel.

POLICIES AND PRACTICES FOR STORING, RETRIEVING, ACCESSING, RETAINING AND DISPOSING OF RECORDS IN THE SYSTEM:

STORAGE:

Data are maintained on magnetic tape, disk, or laser optical media.

RETRIEVABILITY:

Records may be retrieved by name, name and one or more criteria (*e.g.*, dates of birth, death and service), SSN or VA claim number.

SAFEGUARDS:

1. Access to and use of these records is limited to those persons whose official duties require such access. Personnel screening is employed to prevent unauthorized disclosure.

2. Access to Automated Data Processing files is controlled at two levels: (1) Terminals, central processing units, and peripheral devices are generally placed in secure areas (areas that are locked or have limited access) or are otherwise protected; and (2) the system recognizes authorized users by

means of an individually unique password entered in combination with an individually unique user identification code.

3. Access to automated records concerning identification codes and codes used to access various VA automated communications systems and records systems, as well as security profiles and possible security violations is limited to designated automated systems security personnel who need to know the information in order to maintain and monitor the security of VA's automated communications and veterans' claim records systems. Access to these records in automated form is controlled by individually unique passwords and codes. Agency personnel may have access to the information on a need to know basis when necessary to advise agency security personnel or for use to suspend or revoke access privileges or to make disclosures authorized by a routine use.

4. Access to VA facilities where identification codes, passwords, security profiles and possible security violations are maintained is controlled at all hours by the Federal Protective Service, VA or other security personnel and security access control devices.

RETENTION AND DISPOSAL:

Copies of back-up computer files will be maintained at primary and secondary VA recipient sites for CMS data (see Appendix 5). Records will be maintained and disposed of in accordance with the records disposal authority approved by the Archivist of the United States, the National Archives and Records Administration, and published in Agency Records Control Schedules.

SYSTEM MANAGER AND ADDRESS:

Manager, Medicare and Medicaid Analysis Center, 100 Grandview Rd., Suite 114, Braintree, MA 02184.

NOTIFICATION PROCEDURE:

Individuals wishing to inquire whether this system of records contains information about them should submit a signed written request to the Manager, Medicare and Medicaid Analysis Center, 100 Grandview Rd., Suite 114, Braintree, MA 02184.

RECORDS ACCESS PROCEDURES:

An individual who seeks access to records maintained under his or her name or other personal identifier may write the System Manager named above and specify the information being contested.

CONTESTING RECORD PROCEDURES:

(See Records Access Procedures above).

RECORD SOURCE CATEGORIES:

Information may be obtained from the Patient Medical Records System (24VA136), Patient Fee Basis Medical and Pharmacy Records (23VA136), Veterans and Beneficiaries Identification and Records Location Subsystem (38VA23), Compensation, Pension, Education and Rehabilitation Records (58VA21/22), all other potential VA and non-VA sources of veteran demographic information, and CMS databases. The records also include information from: Civilian Health and Medical Program of the Department of Veterans Affairs (CHAMPVA), VA/DOD Identity Repository (VADIR), as well as the OEF/OIF roster (Defense Manpower Data Center), and United States Renal Data System (USRDS).

VA Appendix 5

1. VA Medicare and Medicaid Analysis Center, field unit of the Office of the Assistant Deputy Under Secretary for Health (ADUSH) for Policy and Planning, 100 Grandview Rd., Suite 114, Braintree, MA 02184.

2. VA Information Resource Center (VIReC), Hines VA Medical Center, 5th Ave & Roosevelt Ave, Hines, IL 60141. Veterans Health Administration (VHA), 810 Vermont Avenue, NW., Washington, DC 20420.

3. Office of the Assistant Deputy Under Secretary for Health (ADUSH) for Policy and Planning, 811 Vermont Avenue, NW., Washington, DC 20420, Silver Springs, MD, and/or Martinsburg, WV.

4. Austin Information Technology Center, 1615 Woodward Street, Austin, TX 78772.

5. VA facilities.

[FR Doc. 2011–10844 Filed 5–3–11; 8:45 am]

BILLING CODE P

FEDERAL REGISTER

Vol. 76 Wednesday,

No. 86 May 4, 2011

Part II

Department of Agriculture

Food and Nutrition Service

7 CFR Parts 271, 272 and 273

Supplemental Nutrition Assistance Program (SNAP): Eligibility, Certification, and Employment and Training Provisions; Proposed Rule

DEPARTMENT OF AGRICULTURE

Food and Nutrition Service

7 CFR Parts 271, 272, and 273

RIN 0584–AD87

Supplemental Nutrition Assistance Program (SNAP): Eligibility, Certification, and Employment and Training Provisions

AGENCY: Food and Nutrition Service, USDA.

ACTION: Proposed rule.

SUMMARY: This proposed rule would implement provisions of the Food, Conservation and Energy Act of 2008 (FCEA) affecting the eligibility, benefits, certification, and employment and training (E&T) requirements for applicant or participant households in the Supplemental Nutrition Assistance Program (SNAP). The rule would amend the SNAP regulations to: Exclude military combat pay from the income of SNAP households; raise the minimum standard deduction and the minimum benefit for small households; eliminate the cap on the deduction for dependent care expenses; index resource limits to inflation; exclude retirement and education accounts from countable resources; permit States to expand the use of simplified reporting; permit States to provide transitional benefits to households leaving State-funded cash assistance programs; allow States to establish telephonic signature systems; permit States to use E&T funds to provide post-employment job retention services; and limit the E&T funding cycle to 15 months. These provisions are intended to increase SNAP benefit levels for certain participants, reduce barriers to participation, and promote efficiency in the administration of the program.

DATES: Comments must be received on or before July 5, 2011.

ADDRESSES: The Food and Nutrition Service (FNS) invites interested persons to submit comments on this proposed rule. Comments may be submitted by any of the following methods:

Federal eRulemaking Portal: Preferred method. Go to *http://www.regulations.gov;* follow the online instructions for submitting comments on Docket FNS–2011–0008.

FAX: Submit comments by facsimile transmission to (703) 305–2486, attention: Lizbeth Silbermann.

Mail: Send comments to Lizbeth Silbermann, Director, Program Development Division, FNS, 3101 Park Center Drive, Room 810, Alexandria, Virginia, 22302, (703) 305–2494.

Hand delivery or Courier: Deliver comments to Ms. Silbermann at the above address.

All comments on this proposed rule will be included in the record and will be made available to the public. Please be advised that the substance of the comments and the identity of the individuals or entities submitting the comments will be subject to public disclosure. FNS will make the comments publicly available on the Internet via *http://www.regulations.gov.* All submissions will be available for public inspection at FNS during regular business hours (8:30 a.m. to 5 p.m., Monday through Friday) at 3101 Park Center Drive, Room 810, Alexandria, Virginia 22302–1594.

FOR FURTHER INFORMATION CONTACT: Angela Kline, Chief, Certification Policy Branch, Program Development Division, FNS, USDA, at the above address or by telephone at (703) 305–2495.

SUPPLEMENTARY INFORMATION:

I. Background

What acronyms or abbreviations are used in this supplementary discussion of the proposed provisions?

In the discussion of the proposed provisions in this rule, we use the following acronyms or other abbreviations to stand in for certain words or phrases:

Phrase	*Acronym, Abbreviation, or Symbol*
Code of Federal Regulations	CFR
Federal Register	FR
Federal Fiscal Year	FY
Food and Nutrition Act of 2008.	Act
Food and Nutrition Service	FNS or we
Food, Conservation and Energy Act of 2008 (Pub. L. 110–246).	FCEA
Food, Security and Rural Investment Act of 2002 (Pub. L. 107–171).	FSRIA
Secretary of the U.S. Department of Agriculture.	Secretary
Section (when referring to Federal regulations).	§
Supplemental Nutrition Assistance Program.	SNAP
Temporary Assistance for Needy Families.	TANF
United States Code	U.S.C.
U.S. Department of Agriculture.	the Department or we

What changes in the law triggered the need for this proposed rule?

The Food, Conservation and Energy Act of 2008 (Pub. L. 110–246) (FCEA), which was enacted on June 18, 2008, amended and renamed the Food Stamp Act of 1977, 7 U.S.C. 2011, *et seq.,* as the Food and Nutrition Act of 2008 (the Act). The FCEA also renamed the "Food Stamp Program" as the "Supplemental Nutrition Assistance Program" (SNAP) and made numerous amendments to the benefits and operation of the program. This rule proposes to codify into the SNAP regulations 12 provisions from the FCEA and also to make conforming nomenclature changes throughout part 273 of the SNAP regulations, including the change to the program's name. In addition, this rule proposes two changes to the SNAP certification and eligibility regulations to provide State options that are currently available to State agencies only through waiver requests. Finally, in § 273.12, this rule proposes to clarify the applicability of various provisions to different client reporting systems. The provisions included in this rule affect the eligibility, benefits, and certification of program participants as well as the E&T portion of the program.

When were States required to implement the statutorily-based provisions covered in this rulemaking?

The statutory provisions covered in this rule were effective on October 1, 2008. Many of the eligibility, certification and E&T provisions included in this proposed rule were mandated by the FCEA to be implemented by State agencies on October 1, 2008. These provisions with corresponding FCEA sections include:

- Section 4001—Changing the program name;
- Section 4101—Excluding military combat pay;
- Section 4102—Raising the standard deduction for small households;
- Section 4103—Eliminating the dependent care deduction caps;
- Section 4104(a)—Indexing the resource limits;
- Section 4104(b)—Excluding retirement accounts from resources;
- Section 4104(c)—Excluding education accounts from resources;
- Section 4107—Increasing the minimum benefit for small households; and
- Section 4122—Funding cycles for E&T programs.

The FCEA created new program options that State agencies may include in their administration of the program. State agencies were also permitted to implement these provisions on October 1, 2008. These provisions, which are addressed in this rule, are identified below with the corresponding FCEA section:

- Section 4105—Expanding simplified reporting;

• Section 4106—Expanding transitional benefits option;

• Section 4108—E&T funding of job retention services; and

• Section 4119—Telephonic signature systems.

Still other FCEA provisions, which are not addressed in this proposed rule, cannot be implemented by State agencies until the final regulations are issued by the Department. FNS informed State agencies of implementation timeframes for all SNAP provisions in the FCEA in a memorandum dated July 3, 2008. The information also included a basic description of the statutory provisions and can be found on the FNS Web site at: *http://www.fns.usda.gov/snap/whats_new.htm.*

What changes are proposed in this rule?

1. Program Name Change and Other Conforming Nomenclature Changes, Section 4001

Why did the law change the program's name?

Section 4001 of the FCEA changed the name of the program from the "Food Stamp Program" to the "Supplemental Nutrition Assistance Program" or "SNAP". This change in name reflects the fact that participants no longer receive stamps or coupons to make food purchases. The process of changing from paper coupons to electronic benefit transfer (EBT) cards began as a pilot project in 1984; the EBT system became available nationwide in June 2004. The FCEA de-obligated all remaining food coupons as legal tender for SNAP purchases on June 18, 2009.

Additionally, the new name reflects a focus on the nutritional aspect of the program. SNAP not only provides food assistance to low-income people, but also promotes nutrition to improve their health and well-being.

Do State agencies have to use the new program name, SNAP?

No. Although the official name of the program was changed on October 1, 2008, State agencies may continue to use State-specific names for SNAP. The Department has encouraged State agencies, however, to discontinue the use of the name, "Food Stamp Program".

Did the law make other name changes?

Yes. Section 4001 of the FCEA also changed the name of the statute that governs the program from the Food Stamp Act of 1977 to the Food and Nutrition Act of 2008. This change was also effective on October 1, 2008.

What name changes does this rule propose to make?

This rule proposes to make the following name changes in 7 CFR part 273 of the SNAP regulations:

Previous name	*New name*
Food Stamp Program.	Supplemental Nutrition Assistance Program (SNAP).
Food Stamp Act of 1977.	Food and Nutrition Act of 2008.
food stamp	SNAP.
food coupons	SNAP benefits or benefits.
food stamps ...	SNAP benefits or benefits.

Will these changes be made to the other Parts of the SNAP regulations?

Yes. We will publish other proposed or final rulemakings that will make these changes in other parts of the SNAP regulations.

Are there extensive revisions in part 273 resulting from these nomenclature changes?

Yes. This rule proposes to revise §§ 273.11(e) and 273.11(f) to update the procedures for providing benefits via EBT cards to residents of drug and alcohol treatment and rehabilitation centers and residents of group living arrangements. These procedures are already in use by these types of centers; only the regulatory description of the procedures is being updated.

2. Income Exclusions and Deductions: Military Combat-Related Pay Exclusion, Section 4101

What is the Combat-Related Pay Exclusion?

Section 4101 of FCEA amended section 5(d) of the Act (7 U.S.C. 2014(d)) to exclude special pay to United States Armed Services members that is received in addition to basic pay as a result of the member's deployment or service in a designated combat zone. The exclusion includes any special pay received pursuant to 37 U.S.C., Chapter 5 and any other payment that is authorized by the Secretary. To qualify for the exclusion, the pay must be received as a result of deployment to or service in a combat zone and must not have been received prior to deployment. Combat-related pay was first authorized as a SNAP exclusion in 2005 under the Consolidated Appropriations Act of 2005 (Pub. L. 108–447). The exclusion was subsequently renewed annually through appropriation legislation.

What is a Combat Zone?

A combat zone is any area that the President of the United States designates by Executive Order as an area in which the U.S. Armed Forces are engaging or have engaged in combat.

How is FNS proposing to implement this exclusion in the SNAP regulations?

We propose to add a new paragraph (20) to § 273.9(c) to exclude combat-related pay received by a household from a person who is serving in the U.S. Armed Forces who is deployed to or serving in a Federally-designated combat zone. We propose to define combat-related pay as income received by the household member under 37 U.S.C., Chapter 5 or as otherwise designated by the Secretary. Combat-related income is excluded if it is:

• Received in addition to the service member's basic pay;

• Received as a result of the service member's deployment to or service in an area that has been designated as a combat zone; and

• Not received by the service member prior to his/her deployment to or service in the designated combat zone.

How would combat-related pay be verified?

For individuals deployed to or serving in a combat zone, the amount of income received by or from the individual that is combat-related must be determined. This includes itemized combat-related payments authorized under 37 U.S.C., Chapter 5 in addition to any other combat-related payments authorized by the Secretary which were not received immediately prior to the deployment to or service in the combat zone. Although the specific means of verifying this information may vary by U.S. military service and by local area, a number of sources may be considered. Information regarding deployment to or service in a combat zone may be available via earnings and leave statements, military orders or public records on deployment of military units.

Does all income received by the service member in a combat zone qualify for the exclusion?

No. Only those funds authorized pursuant to 37 U.S.C., Chapter 5 or otherwise authorized by the Secretary that are provided as a result of deployment to or service in a combat zone qualify for the exclusion. Funds received by a household prior to the service member's deployment are included as household income requiring the State agency to differentiate between the service member's "regular" pay and combat-related pay to determine the excluded amount. For example, consider a service member who typically provides a household with $500 a month prior to deployment; however, after deployment the service member receives an additional $200 in combat-related pay and makes that pay available to the household. As a result, the family receives a total of $700 a month, but only $500 is counted as income because the additional $200 is combat-related.

Is the deployed military member considered a household member?

Military personnel who have been deployed are not included as household members for purposes of determining SNAP benefits as they are not living with the remaining eligible members of the household. However, income made available to the household by the deployed military member is considered household income, unless it is otherwise excluded under program rules.

3. Income Exclusions and Deductions: Standard Deduction Increase, Section 4102

What is the standard deduction?

The standard deduction was established under the Food Stamp Act of 1977, which eliminated certain deductions and created a single standard deduction available to all households. The standard deduction is subtracted from a household's gross monthly income to determine a SNAP household's net income and to calculate the benefit amount, if eligible.

How has the standard deduction changed over the years?

The Personal Responsibility and Work Opportunity Reconciliation Act of 1996 (PRWORA) (Pub. L. 104–193), froze the standard deduction at $134 for all households residing in the 48 States and the District of Columbia. The Food, Security and Rural Investment Act of 2002 (Pub. L. 107–171) (FSRIA) replaced the $134 standard deduction with a deduction that varied according to household size and was adjusted annually for cost-of-living increases. For households in the 48 contiguous States and the District of Columbia, Alaska, Hawaii, and the U.S. Virgin Islands, FSRIA set the deduction at 8.31 percent of the applicable net income limit based on household size and stipulated that no SNAP household may receive an amount less than the 2002 deduction amount ($134 for most households) or more than the current standard deduction for a six-person household. Households residing in Guam receive a somewhat higher deduction.

What changes did the FCEA make to the standard deduction?

Section 4102 of the FCEA amended section 5(e) of the Act (7 U.S.C. 2014(e)) to raise the minimum standard deduction for one, two, or three person households from $134 to $144. This change was effective in FY 2009 for the 48 contiguous States and the District of Columbia. In addition, it changed the minimum standard deduction amounts for Alaska, Hawaii, the U.S. Virgin Islands, and Guam to $246, $203, $127, and $289, respectively. Beginning in FY 2010 and each fiscal year thereafter, FCEA indexed the minimum standard deduction to inflation.

How is the minimum standard deduction indexed to inflation?

Beginning FY 2010, the amount of the minimum standard deduction is adjusted each year on October 1 to reflect changes in the Consumer Price Index for All Urban Consumers (CPI–U) published by the Bureau of Labor Statistics of the Department of Labor, for items other than food. The amount is calculated based on the previous fiscal year amount adjusted for changes in the CPI–U for the 12-month period ending on the preceding June 30, rounded down to the nearest dollar.

How does FNS plan to incorporate this change in the regulations?

FNS is proposing to amend the regulations at § 273.9(d)(1)(iii) to incorporate the FCEA changes in the minimum standard deduction. In addition, FNS plans to correct the citation at § 273.12(e)(1)(B) from § 273.9(d)(7) to § 273.9(d)(1).

How does increasing the minimum standard deduction affect eligible SNAP households?

Increasing the minimum standard deduction strengthens the food purchasing power of low-income households, including working families with children, the elderly and disabled on fixed incomes, and individuals who have lost jobs due to economic conditions. This change will be of significant impact to smaller households of three or fewer people, primarily in the 48 contiguous States and DC, who would otherwise qualify for a smaller deduction and lower benefit amounts without the minimum standard. Adjusting the minimum standard deduction each fiscal year also protects eligible SNAP households from any future erosion in benefits due to inflation.

4. Income Exclusions and Deductions: Eliminating the cap on Dependent Care Expenses, Section 4103

How does this change affect SNAP households?

A deduction for dependent care costs is currently available when a SNAP household member must work, perform job seeking activities, attend required employment and training activities, or attend college or training in order to get a job. The deduction amount had been capped since 1993 at $200 per month for children under the age of 2 years and $175 for other dependents. Section 4103 of the FCEA amended section 5(e)(3) of the Act (7 U.S.C. 2014(e)(3)) by eliminating the caps on the deduction for dependent care expenses and allowing eligible households to deduct the full amount of their dependent care costs.

When was this change effective?

The change was effective October 1, 2008. State agencies were required to implement the provision for new households applying for benefits as of that date. For ongoing households already on the program, the Department encouraged State agencies to implement the change in the deduction amount as soon as possible on or after October 1, 2008, on a case-by-case basis, at the first opportunity to enter the household's case file.

Why was this change made?

Prior to the FCEA, the caps on the dependent care deduction had not been adjusted for many years and no longer reflected the actual dependent care costs that low-income households pay. Eliminating the caps ties the deduction to actual expenses and reflects these costs in determining assistance to working families.

How is the Department proposing to revise the deduction for dependent care costs?

We propose to amend §§ 273.9(d)(4) and 273.10(e)(1)(i)(E) to eliminate the caps. We propose to clarify that in addition to direct payments made to the care provider for the actual cost of care, the expenses of transporting dependents to and from care and separate activity fees charged by the care provider that are required for the care arrangement are also deductible. We also propose to incorporate at § 273.9(d)(4) longstanding guidance that defines dependent care to include children through the age of 15 as well as incapacitated persons of any age that are in need of dependent care. Finally, we propose to restore language to that section that permits households to deduct dependent care costs if a household member needs care for a dependent in order to seek employment. This provision was inadvertently removed from the regulations as part of a 1989 technical amendment to the regulations. Dependent care costs would be deductible for job seeking household members who are either complying with E&T requirements or an equivalent State agency job search requirement.

What are actual costs of care?

Section 5(e)(3) of the Act specifies that the actual costs that are necessary for the care of a dependent may be deducted if the care enables a household member to accept or continue employment, or to participate in training or education in preparation for employment. In the preamble to the proposed rule to implement the provisions of the Food Stamp Act of 1977 (43 FR 18890), published on May

2, 1978, FNS stated that the dependent care deduction applies only to the direct compensation to the care provider. Since then, FNS has provided guidance on specific situations to determine "actual costs of care" or whether care was needed for employment or to prepare for employment. In some instances, this limited guidance defined these costs more broadly than the 1978 interpretation, particularly concerning the transportation of dependents to and from care.

What are other dependent care expenses?

In addition to direct payments to the care provider, we propose to permit households to deduct other out-of-pocket costs that are part of the total cost of dependent care incurred by SNAP households and necessary for the household to participate in or maintain the care arrangement. The following types of dependent care expenses would be deductible under this proposal:

- Transportation costs to and from the care facility; and
- Activity fees associated with structured care programs.

Only those expenses that are separately identified, necessary to participate in the care arrangement, and not already paid by another source on behalf of the household would be deductible. Under current SNAP regulations at § 273.2(f)(2) and § 273.2(f)(3), State agencies may require households to verify any dependent care expenses and must verify any questionable information.

Why include transportation?

The Department has three reasons for including the expenses of transportation as part of the actual costs of dependent care. First, the removal of the dependent care caps by the FCEA indicates an important shift by Congress in recognizing that associated costs represent a major expense for working households. Second, a consistent national policy on this issue is needed. Despite FNS' initial interpretation (in the preamble to the 1978 proposed rule) limiting dependent care deductible expenses to direct payments to a dependent care provider, subsequent interpretations indicated that the cost of transporting dependents to and from care facilities were allowable. In the absence of a consistent national policy, some State agencies developed policies that permit the deduction of transportation costs and other dependent care costs. Third, during the floor discussions in both houses of Congress prior to the passage of the FCEA, members of Congress expressed support for allowing the deduction of transportation costs.

What are activity fees and why include them?

An activity fee is an expense associated with a structured care program. Examples of activity fees that may be deductible under this proposal include:

- The cost of an art class for an after school program or an adult day care program;
- Additional fees charged for attending a sports camp; and
- The cost of field trips sponsored by summer camps.

The Department views the elimination of the dependent care caps as an indication of Congress' recognition of the importance of affordable, reliable, and safe care for the children or other dependents of SNAP households. Dependent care involves many different types of costs, including fees charged for activities that are part of structured dependent care programs, such as before and after school care, summer camps, or adult day care. For older children, dependent care expenses are more likely to include costs for participating in recreational or educational enrichment activities. As with other dependent care costs, a key to allowability of an activity fee is whether the activity enables a household member to be employed or pursue training or education to prepare for employment. To count toward the household's dependent care expenses, activity fees would have to be specific and identifiable additional costs.

Since State agencies would be responsible for determining the allowability of specific costs claimed as activity fees, we encourage States and local agencies to provide comments on this proposal. Commenters might consider addressing the following questions: Are activity fees identifiable additional charges paid by households that can be verified? Is more detailed guidance needed to determine allowable costs, and what specific conditions would commenters wish to see in a final rule?

Why set the upper age limit for child care at 15 years of age?

As previously mentioned, FNS' longstanding policy permits dependent care expenses for children from birth through age 15 to be deductible. This upper age limit for children stems from requirements at section 6(d)(1)(A)of the Act (7 U.S.C. 2015(d)(1)(A)) and § 273.7(a) of the regulations that SNAP household members who turn 16 must register for work unless they are attending school at least half-time or are otherwise exempt from work registration. Although we have consistently indicated age 15 as the upper age limit for allowable dependent care expenses in response to specific situations, a formal nationwide policy has not been issued. Since questions about the upper age limit for deductible child care expenses continue to arise occasionally, this rule provides an opportunity to propose to codify FNS policy.

Are there any age restrictions on dependent care expenses for disabled persons?

No. Since a person can become incapacitated at any age and thus require dependent care, we propose to specify that dependent care costs for an incapacitated person of any age would be deductible. Although this proposal does not tie the allowability of dependent care expenses for incapacitated adults to the SNAP regulatory definition of "elderly or disabled member", we think that any adult requiring dependent care would be either disabled or elderly. The SNAP regulations at § 271.2 of this chapter define "elderly or disabled member" as someone who is 60 years of age or older or is determined to be disabled based on receipt of specific payments such as SSI, veterans' disability benefits, or other disability or retirement payments. Disability must be verified per § 273.2(f)(1)(viii). We welcome comments on whether adult dependent care expenses should be limited only to adults that meet the regulatory definition of "elderly or disabled member".

5. Resources: Asset Indexation, Section 4104

What changes did the law make to resource limits for SNAP households?

Section 4104(a) of the FCEA amended Section 5(g) of the Act (7 U.S.C. 2014(g)) to mandate that the current asset limits be indexed to inflation, rounding down to the nearest $250 beginning October 1, 2008.

How does the Department propose to index assets?

Current regulations at § 273.8(b) limit SNAP households without disabled or elderly members to a maximum of $2,000 in resources and SNAP households with disabled or elderly members to a maximum of $3,000 in resources. This rule proposes to revise § 273.8(b) by indexing the current asset limits to inflation. Section 4104(a) of the FCEA mandated that the Department use the CPI–U published by the Bureau of Labor Statistics of the Department of Labor. Starting October 1, 2008, and each October 1 thereafter, the maximum allowable resources would be adjusted based on the previous year's rate of inflation. The value of a household's

resources would be rounded down to the nearest $250 increment.

Why change the asset limits?

These changes allow the resource limits to keep pace with inflation. Without this indexation, the maximum allowable resources would remain constant even as the prices of goods and services rise.

When does the Department estimate that the maximum allowable resources will increase?

The Department estimates that the maximum allowable resources will not increase until FY 2013.

6. Resources: Exclusion of Retirement Accounts From Resources, Section 4104

How would the proposed rule affect retirement accounts?

Consistent with Section 4104(b) of the FCEA (Section 5(g)(7) of the Act), we propose to exclude all funds that are in tax-preferred retirement accounts from countable resources when determining eligibility for SNAP. This proposed revision would amend the SNAP regulations at § 273.8(e)(2)(i).

Which retirement accounts would be excluded?

The proposed rule would exclude funds from countable resources if they are in accounts that fall under any of the following sections of the Internal Revenue Code of 1986 (Title 26 of the United States Code) (IRC): 401(a), 403(a), 403(b), 408, 408A plans, 457(b), 501(c)(18).

IRC Section 401(a) plans include simple 401(k) plans and traditional 401(k) plans. Simple 401(k) plans are for small businesses, are subject to some limitations on employer contributions, and are exempt from some restrictions. Other 401(k) plans, also referred to as "cash or deferred arrangement" (CODA) plans, allow employees to defer compensation in the plan.

IRC section 403(a) plans are funded through annuity insurance. Section 403(b) plans are also called "tax sheltered annuities" or "custodial account plans", are available to tax exempt nonprofit organizations and public schools, and are often funded through employee contributions.

Section 408 of the IRC describes Individual Retirement Accounts and Annuities (IRAs), including simple retirement accounts and Simplified Employee Pension Plans (SEPs). IRAs are controlled by individuals rather than employers. Simple retirement account IRAs are only available to small businesses. SEPs are sponsored by small business employers and allow the employer to add funds to the account and function like IRAs.

Roth IRAs are described in Section 408A of IRC. Qualified distributions to Roth IRAs are tax-free.

Section 457 of IRC describes funded plans provided by State or local governments and unfunded plans offered by nonprofit organizations.

The proposed rule would also exclude all funds in a Federal Thrift Savings Plan (5 U.S.C. 8439). Federal Thrift Savings Plans are plans offered by the Federal government to its employees.

Why is the Department proposing to maintain discretion over future retirement accounts?

The FCEA provides the Secretary with discretion to exclude future retirement accounts should new types of retirement accounts develop. Thus, the proposed rule would allow the Department to exclude any subsequently created retirement accounts that are exempt from Federal taxes. This would allow the Department to maintain consistency with regard to its treatment of retirement accounts.

7. Resources: Exclusion of Education Accounts From Resources, Section 4104

How does the proposed rule affect the treatment of education savings accounts?

Consistent with Section 4104(c) of the FCEA, which amended Section 5(g)(8) of the Act (7 U.S.C. 2014(g)(8)), the proposed rule would exclude all tax-preferred education savings accounts from resources when determining SNAP eligibility. This proposed provision would amend the SNAP regulations by adding a new paragraph at § 273.8(e)(20).

Which education savings accounts would be excluded?

We propose to exclude all funds in education savings accounts from resources if the fund is described in section 529 or section 530 of the IRC. Section 529 of the IRC describes qualified tuition programs that allow a contributor to contribute funds or purchase tuition credits for qualified education expenses for a designated beneficiary. Section 529 plans can only be used for qualified higher education expenses for tuition, fees, books, supplies, and equipment.

Section 530 of the IRC describes Coverdell Education Savings Accounts, formerly known as "Education Individual Retirement Accounts". Coverdell Education Savings Accounts are trusts created to pay the education expenses of the designated beneficiary. The funds in a Coverdell Education Savings Account can be used for any qualified higher education expense or any qualified elementary and secondary education expense. These expenses could be for tuition, fees, tutoring, books, uniforms, room and board, transportation, supplies, and other equipment.

How does the Department propose to handle future changes to education savings accounts?

As with the retirement accounts, the FCEA provides the Secretary with discretion to exclude subsequent education savings accounts. Thus, this rule proposes that the Department maintain discretion over future tax-preferred education savings accounts. This would permit the Department to maintain consistent policy concerning education saving accounts should the IRC develop new types of tax-preferred education savings accounts.

8. State Options From the FCEA: Expansion of Simplified Reporting, Section 4105

What is simplified reporting?

Simplified reporting is an option available to State agencies under SNAP regulations at § 273.12(a)(5) that requires minimal household reporting in comparison to the other types of household reporting systems that are available to State agencies under the SNAP regulations. During the certification period in a simplified reporting system, a household must only report when the following occurs:

- Gross monthly income exceeds the SNAP gross monthly income standard, which is set at 130 percent of the Federal income poverty guidelines; or
- The work hours of an able-bodied adult without dependents (ABAWD) falls below the minimum average of 20 hours.

In addition, a household may also be required to submit a periodic report, generally about halfway through the certification period, for which certain changes that have occurred since certification must be reported. The reporting requirements for the periodic reports are limited in number and scope by Federal regulations, which have benefitted SNAP households as well as State agencies. Because of the reduced reporting burden, simplified reporting has afforded relatively stable benefit levels for households. In addition, with fewer periodic reports to process, simplified reporting has reduced State agencies' administrative workload as well as error rates. The popularity of simplified reporting has grown steadily since its addition to the regulations in November 2000; today, almost all State agencies place most households certified for at least 4 months on simplified reporting.

How did the law expand simplified reporting?

Section 4105 of the FCEA removed a restriction in section 6(c)(1)(A) of the Act (7 U.S.C. 2015(c)(1)(A)) that prohibited periodic reporting for certain households. The households included homeless, migrant and seasonal farm workers, and disabled or elderly adults in households with no earnings. This restriction discouraged State agencies from including these households in their simplified reporting systems. The FCEA eliminated the ban on periodic reporting by these households but limited the frequency with which State agencies may require these households to file periodic reports. As a result, effective October 1, 2008, State agencies may place all households on simplified reporting, allowing elderly, disabled, homeless, and migrant and seasonal farm worker households to participate with only minimal change reporting requirements.

What is the statutory limit for periodic reports for elderly, disabled, homeless and migrant or seasonal farm worker households?

As amended by the FCEA, Section 6(c)(1)(A) of the Act limits the frequency of periodic reporting for homeless and migrant or seasonal farm worker households to every 4 months and for households in which all adult members are elderly or disabled with no earned income to once a year. The 4-month limitation on reporting frequency for homeless and migrant or seasonal farm worker households is consistent with current periodic reporting requirements. To be consistent with current law, regulations published on January 29, 2010 (75 FR 4912), specified the periodic reporting limitation of once per year for the elderly or disabled households with no earned income.

How does this rule propose to implement the statutory change to simplified reporting?

We propose to clarify in § 273.12 the periodic reporting requirements and frequency of required periodic reporting for all households that are placed under the State agency's simplified reporting system. These revised provisions are located at proposed paragraphs (d)(6)(iii)(A) and (d)(6)(iii)(B), respectively.

What other changes are proposed for § 273.12?

We are proposing to reorganize § 273.12 to improve the readability of the section and to clarify aspects of current reporting requirements applicable under each reporting system. Currently, there are four SNAP client reporting systems. Three of these client reporting systems are covered in § 273.12, as noted below:

- Change reporting—§ 273.12(a), (b), (c), and (d);
- Quarterly reporting—§ 273.12(a)(4), (b), and (c);
- Simplified reporting—§ 273.12(a)(5), (b), and (c); and
- Monthly reporting—§ 273.21.

We propose to reorganize and clarify the requirements for the reporting systems currently covered under § 273.12, as noted above. The reason for this is that all State agencies are currently using one or more of the reporting systems that are currently contained in § 273.12 for the majority of their SNAP households. States' use of monthly reporting, located in § 273.21, is now negligible. We recognize that further reorganizations will probably be needed in future years to keep pace with the continuing evolution of client reporting requirements in SNAP. A future issue may be whether to remove regulations concerning a reporting system that is no longer utilized by any State agency.

What is the rationale for revising § 273.12?

Like most sections in part 273, which covers the certification and eligibility requirements for SNAP households, § 273.12 was initially written in the late 1970's to incorporate the provisions of the Food Stamp Act of 1977. At that time, client reporting requirements were contained under a single "change reporting" system. Later, § 273.12 was amended to add other client reporting options in addition to change reporting, without always completely identifying which of the required change reporting provisions also applied to the other reporting systems. Other incremental changes were made to reporting requirements over time as well. As a result, the regulations on specific provisions of various reporting systems are unclear. This lack of clarity is particularly noticeable in paragraphs (b), (c), and (d) of the current § 273.12, which cover requirements for report forms, State agency action on changes, and household failure to report, respectively.

How is FNS proposing to reorganize the section?

We propose the following paragraphs for § 273.12:

Paragraph (a) General requirements;
Paragraph (b) Change reporting;
Paragraph (c) Quarterly reporting;
Paragraph (d) Simplified reporting;
Paragraph (e); Mass changes; and
Paragraph (f) Optional reporting requirements for public assistance (PA) and general assistance (GA) households.

Paragraph (a) would describe the general requirement for household reporting, identify the reporting systems currently permitted under the regulations, and list the location in the regulations for the client reporting systems.

Paragraphs (b), (c), and (d) would describe the requirements appropriate to change, quarterly, and simplified reporting systems, respectively, addressing the following topics:

- Features;
- Included households;
- What households must report;
- Special procedures for child support payments;
- How households must report;
- When households must report;
- When households fail to report; and
- State agency action on changes.

The provisions for State agency implementation of mass changes and reporting options for PA and GA households, currently located at paragraphs (e) and (f) of this section would remain unchanged other than nomenclature changes.

FNS is interested in commenters' thoughts on this proposed revision. We think that there are positive aspects to using a systematic approach to describe the requirements for each respective reporting system. The most important advantage will be the ease in locating all requirements pertinent to each reporting system. In addition, we think that this revision will enable State agencies to compare the relative advantages and disadvantages of each reporting system more easily. The drawback to this approach is a certain amount of redundancy that will increase the overall length of the section.

Is FNS proposing any clarification of reporting requirements beyond just a reorganization of § 273.12?

Yes. Although our primary intention is to explain the requirements of each reporting system covered in § 273.12 in a more logical and consistent manner, we are also proposing to clarify aspects of certain reporting requirements. These clarifications include:

- *Household requirement to report changes in liquid resources.*

We are proposing three clarifications that would apply to households subject to change, quarterly, and simplified reporting. First, we propose to clarify that elderly and disabled households would only report changes when liquid resources (*i.e.,* cash, money in checking or savings accounts, saving certificates, stocks or bonds, and lump sum payments) reach or exceed the maximum amount permitted for these households under the Act. Second, we propose to specify that the maximum resource levels for elderly and disabled households and for all other households (currently set at $3,000 and $2,000,

respectively) will reflect adjustments for inflation under proposed § 273.8(b)(1). Third, we propose language that would exempt households from reporting changes in liquid resources if the State agency excludes resources for categorically eligible households. Current FNS guidance provides a blanket waiver from the resource limitation reporting requirements for categorically eligible households, as provided under § 273.2(j)(2)(v).

• *Household requirement to report changes in vehicle acquisition.* We propose to clarify that households will not have to report changes in vehicle acquisitions that are not fully excludable under SNAP regulations if the State agency uses TANF vehicle rules, as provided under § 273.8(f)(4). Current FNS guidance provides for a blanket waiver of this reporting requirement if the State agency is using TANF vehicle rules in lieu of SNAP vehicle rules.

• *Standardization of certain reporting requirement features.* We are proposing to clarify that certain basic features currently applicable to one or more reporting systems are applicable to all three reporting systems covered in § 273.12. These features include permitting households under a change reporting system to report changes by fax, e-mail, or through a State agency's Web site; specifying that the change report form must be written in clear, simple language and must meet SNAP bilingual requirements; and specifying that reporting requirements for applicants (currently located at § 273.12(a)(3)) and provisions describing permissible claim action by State agencies when households fail to report (currently located at § 273.12(d)) apply to quarterly and simplified reporting systems as well as change reporting systems.

9. State Options From the FCEA: Transitional Benefits Alternative, Section 4106

What is the transitional benefit alternative (TBA)?

TBA is an option provided at Section 11(s) in the Act (7 U.S.C. 2020(s)) that permits State agencies to offer transitional SNAP benefits to households leaving certain public assistance programs. TBA was incorporated into the SNAP regulations at § 273.12(f)(4) by a final rule, "Noncitizen Eligibility and Certification Provisions of Pub. L. 104–193", published on November 21, 2000 (65 FR 70183). TBA ensures that households that are leaving public assistance programs can continue to meet their nutritional needs as they transition from public assistance to the workforce. TBA guarantees a fixed SNAP benefit amount and eliminates reporting requirements during the transition period, which is up to five months. During this time, households receive SNAP benefits that equal the amount received immediately prior to the termination of TANF benefits, with adjustments made for the loss of TANF.

How did the FCEA change this option?

Section 4106 of the FCEA amended Section 11(s)(1) of the Act to permit State agencies to provide transitional SNAP benefits to households with children that cease to receive cash assistance under a State-funded public assistance program. Prior to this change in the law, States were able to provide transitional SNAP benefits only to households that stopped receiving Federally-funded TANF assistance. FCEA sought to provide similar treatment of State-funded programs, similar in purpose to TANF assistance.

How will this change affect SNAP households?

This provision enables State agencies to extend TBA to additional households with children that are being terminated from State-funded public assistance that is similar to TANF but not funded through TANF. For some households, this could mean an additional period of TBA eligibility if the State has a cash benefit program that follows after TANF ends. For other households that did not receive TANF, it provides an opportunity for stabilized SNAP benefits after the State-funded assistance program ends.

What types of assistance programs would qualify under this provision?

As specified in the Act at Section 11(s)(1)(B), eligible programs are those funded by States that provide cash assistance to families with children. These state-funded cash assistance programs would be separate from State-level TANF funding streams. An example of an eligible program would be a State general assistance program that provides cash assistance to families with children. Programs that would not be eligible under this provision include programs that are funded by local level governments and programs that do not provide a cash benefit.

Is it possible for a household to receive TBA more than once—first, when the TANF benefits end and again, when the State-funded cash assistance (SFCA) ends?

Yes, provided that certain conditions exist. First, the household must be qualified to receive transitional benefits based on State agency criteria, which must be described in the State plan of operation, per § 273.26. Second, the SFCA must meet the criteria in Section 11(s)(1)(B) of the Act as described above—that is, it must provide SFCA to families with children. Third, the SFCA must be provided after the family is terminated from TANF.

How does the Department propose to implement this provision?

We propose to amend State plan requirements at § 272.2(d)(1)(H) and subpart H in part 273 of the SNAP regulations, to specify that household's eligibility for TBA may be based on SFCA in addition to TANF. We propose to specify that a household may qualify for an additional TBA period if it participates in a SFCA program that continues after TANF has ended. We also propose that in administering TBA based on SFCA, State agencies would follow the same procedures they currently use to administer TBA based on TANF. In making this change, we propose to add SFCA to numerous provisions in subpart H of part 273, which include:

• § 273.26—introductory paragraph and paragraph (a);
• § 273.27—paragraphs (a) and (c);
• § 273.29—paragraphs (c) and (d); and
• § 273.32.

10. Increasing Benefits for Small Households: Minimum Benefit Increase, Section 4107

How did the FCEA increase minimum benefit amounts?

Section 4107 of the FCEA amended section 8(a) of the Act (7 U.S.C. 2017(a)) to increase the minimum benefit amount for one and two-person households from $10 to 8 percent of the maximum allotment for a one-person household, rounded to the nearest whole dollar. The maximum allotment is based on the Thrifty Food Plan (TFP) (Section 4(u) of the Act (7 U.S.C. 2013(u) and 7 CFR 271.2). For FY 2009, this change effectively increased the minimum allotment from $10 to $14 for households in the 48 contiguous States and the District of Columbia (.08 × the one-person TFP of $176 = $14, rounded to the nearest whole dollar). The American Recovery and Reinvestment Act of 2009 (ARRA) (Pub. L. 111–5) further increased the minimum monthly benefit amount for these households from $14 to $16 by raising the maximum allotment, which is used in the minimum benefit calculation (.08 × the increased one-person TFP of $200, rounded to the nearest whole dollar), effective April 1, 2009. SNAP households residing in Alaska, Hawaii, Guam, and the U.S. Virgin Islands receive somewhat higher minimum

benefit amounts since these geographic areas have higher TFP amounts, reflecting higher food prices in these areas.

How does FNS propose to incorporate this change in the regulations?

We propose to amend the regulations at § 273.10(e)(2)(ii)(C) to incorporate the FCEA provision indexing the minimum benefit amount to 8 percent of the maximum allotment for a one-person household, rounded to the nearest whole dollar. In addition, FNS proposes to update the definition of "minimum benefit" in § 271.2 to remove the reference to the former minimum benefit amount of $10 and specify that the minimum benefit shall be based on the provisions of § 273.10.

How does increasing the minimum benefit affect SNAP households?

The Food Stamp Act of 1977 established a monthly minimum benefit of $10 per month for one- and two-person households, and the amount has not been adjusted since that time. As a result, this minimum benefit no longer purchases the same amount of food today as it did more than 30 years ago. Since the TFP is adjusted each fiscal year to reflect price changes, tying the minimum benefit amount to the TFP maintains the purchasing power for smaller households and ensures that future minimum benefit amounts reflect increases in food prices.

11. Employment and Training (E&T): Funding for Job Retention Services, Section 4108

What changes did the law make in E&T program components?

Section 6(d)(4) of the Act (7 U.S.C. 2015(d)(4)) specifies components that State agencies must include as part of E&T programs. Current regulations at § 273.7(e)(1) provide that a State agency must include one or more of the following components:

- A job search program;
- A job search training program;
- A workfare program;
- A work experience and/or training program;
- A project, program or experiment aimed at accomplishing the purpose of the E&T program;
- Educational programs or activities; and
- A program to improve the self-sufficiency of recipients through self-employment.

Section 4108 of the FCEA amended Section 6(d)(4) of the Act to add a new E&T component. Under the amendment, State agencies are allowed to provide job retention services for up to 90 days to an individual who secured employment after receiving other employment/training services under the E&T program offered by the State agency.

What are job retention services?

The Department proposes to amend § 273.7(e)(1)(viii) of the SNAP regulations to define job retention as services provided to individuals who have secured employment to help achieve satisfactory performance, keep the job, and to increase earnings over time. Such services and reimbursable participant costs may include but are not limited to:

- Counseling;
- Coaching;
- Support services;
- Life skill classes;
- Referrals to other services;
- Clothing required for the job;
- Equipment or tools required for the job;
- Test fees;
- Union dues; and
- Licensing and bonding fees.

Can job retention services be provided to individuals after their benefits have ended?

State agencies electing to provide job retention services may extend these services to households leaving SNAP up to the 90 day limit. Job retention services are a time-limited training and support process that assist the individual in assessing job needs and provides assistance and resources as needed. As the individual gains job independence, less assistance is required and the goal of self-sufficiency is achieved. Therefore, the State agency may provide job retention services to individuals losing benefits as a result of increased earnings, consequently, keeping households on track to independence and reducing the possibility of returning to the program.

Would an individual who refuses to accept job retention services be considered an ineligible household member?

Under current regulations at § 273.7(f)(1), a non-exempt individual who fails to comply without good cause is ineligible. Under a strict interpretation of Section 6(d)(1) of the Act (7 U.S.C. 2015(d)(1)), an E&T participant who obtains suitable employment, remains eligible, and fails to accept job retention services may be considered non-compliant. Imposing a penalty on an employed, otherwise eligible individual for choosing not to accept job retention services would place an undue burden on the household and would only serve to block the path to self sufficiency.

Current rules at § 273.7(e)(4) allow voluntary participation in program components without penalty for failure to comply with E&T requirements. The Department proposes that otherwise eligible individuals be treated the same as a volunteer if the individual elects not to accept job retention services offered by the State agency. Such individuals would not be subject to E&T program participation requirements imposed by the State agency. Failure to participate in a job retention program would not result in disqualification.

How did the changes in the law affect voluntary participants?

Section 4108 of the FCEA also modified Section 6(d)(4) of the Act (7 U.S.C. 2015(d)(4)) to permit individuals voluntarily participating in employment and training programs to participate beyond the required maximum of a number of hours based on their benefit divided by the minimum wage. The Department is proposing to amend current rules at § 273.7(e)(4)(iii) to indicate that voluntary participants are not subject to the limitations specified in § 273.7(e)(3) which limit the number of hours spent in an E&T component. Under current regulations the total amount of time spent each month by a participant in an E&T work program, combined with hours worked in a workfare program, and hours worked for compensation must not exceed 120 hours. The total number of hours, which the State agency can mandate (120 hours), would be unaffected.

12. State Options From the FCEA: Telephonic Signature Systems, Section 4119

What is the statutory authority for these proposed changes?

Section 4119 of FCEA amended section 11(e) of the Act (7 U.S.C. 2020(e)) to permit a State agency to accept spoken signatures, subject to certain conditions. Congress used the term "recorded verbal assent" in the statute. In this proposed rule, the Department uses the term "spoken signature" to reflect the range of changes regarding signatures for households' SNAP documents.

What are SNAP's current regulations regarding signatures?

SNAP's current regulations at § 273.2(c)(1) provide for handwritten and electronic signatures. There is no mention of spoken signatures, or of gestured signatures, for those individuals unable to provide spoken assent. By gestured signatures, the Department means a household's attestation or assent through a purely visual language, like American Sign Language (ASL).

The Department's current policy, which would remain in place under this proposed rule, is two-fold:

• A State agency must accept handwritten signatures from applying households, and

• No State agency must accept unwritten signatures if it chooses not to do so.

In particular, the Department has consistently recommended that every State agency consult legal counsel to verify that the verbal assent constitutes a valid signature pursuant to State law.

What is the Department proposing about signatures for SNAP applications?

Essentially, the Department is proposing four changes regarding signatures for SNAP applications:

• To implement Section 4119 of the FCEA by stating clearly that a State agency may accept spoken signatures;

• To implement that statute's restrictions on spoken signatures;

• To apply those restrictions to other signatures, both written and unwritten; and

• To permit gestured, or visual signatures, as an alternative for those individuals who are unable to provide spoken verbal assent.

These proposed changes would apply to applications submitted at initial certification and recertification and to reports required to be submitted under the client periodic reporting systems allowed by SNAP regulations (monthly, quarterly, or simplified reporting systems).

What is a spoken signature?

A spoken signature is intended to include means of assenting to information other than written or electronic. An obvious example would involve an interactive interview with a SNAP household over the telephone. The State agency would elicit responses from the household. At the end of the interview the household would agree that the information is correct and that the household understands its rights and responsibilities. An audio recording of the agreement would be made and linked to the case. That spoken agreement is one example of a spoken signature. The interactive interview and the signature then become part of the household's permanent case record.

May a State agency accept spoken signatures?

Yes, subject to certain requirements, which are discussed later.

Must a State agency accept spoken signatures?

No. This would be a matter for each State agency to decide. However, the Department encourages State agencies to explore this format because of the benefit that it provides to households. For example, people with less acute vision or limited mobility would be able to apply more easily and State agencies could accept applications and conduct interviews over the telephone with less administrative burden.

What are the specific conditions for spoken signatures?

The Department is proposing three conditions that the Act contains and one additional condition. First, section 11(e)(2)(C)(iii)(IV) of the Act (7 U.S.C. 2020(e)(2)(C)(iii)(IV)) requires a State agency to give a household a written copy of the completed application, along with simple instructions for correcting errors or omissions. Although the copy need not be a transcript of the conversation, the copy must contain the information that the State agency uses to determine the household's eligibility and to calculate its SNAP benefit. Since the State agency wants to provide the household with a correct determination, it is in the State agency's interest to ensure that the information in its possession is accurate and complete. The interests of the State agency, the household, and the Department conform exactly on this point.

Second, the Act (at Section 11(c)(iii)(VI), 7 U.S.C. 2020(c)(iii)(VI)) requires the State agency to treat the date of the spoken signature as the date of application. Section 11(e)(2)(B)(iv) of the Act (7 U.S.C. 2020(e)(2)(B)(iv)) requires that the date of application is the date on which a signed application with the applicant's name and address arrives at the State agency's office. In the case of a spoken signature, that signature would arrive at the State agency's office as it is being transmitted, in other words, on that very day. This would eliminate the delay in the filing date that occurs when submitting a paper application via mail, thereby improving client access.

Third, under the Department's proposal, a State agency's system for accepting spoken signatures would have to comply with SNAP's bilingual requirements for the use of appropriate bilingual personnel and printed material in the administration of the program. Section 11(e)(1)(B) of the Act requires a State agency to "comply with regulations of the Secretary requiring the use of appropriate bilingual personnel and printed material in the administration of the program in those portions of political subdivisions in the State in which a substantial number of members of low-income households speak a language other than English". These bilingual regulations are found at § 272.4(b) of this chapter.

Fourth, the Department is also proposing that the State agency give the household at least ten days to return any corrections. This is SNAP's current standard for providing verification; a consistent standard would simplify the situation for both the household and the State agency.

May a State agency accept electronic signatures?

Yes. Current program rules at § 273.2(c)(1) allow an agency to accept electronic signatures. This proposed rule clarifies that this provision is subject to the same restrictions and conditions the Department is proposing for spoken signatures that were discussed above. This is SNAP's current policy, and allows State agencies to continue to explore and to adopt these technologies as a way to improve their service to households and to simplify their management of SNAP cases.

If a State agency accepts electronic, spoken, or gestured signatures anywhere in the State, must it do so statewide?

No. The Department is not proposing that any such system be statewide. We are taking this approach for two reasons. First, a State agency may want to phase such a system into place over a long period of time. This would be particularly true in a State that was adopting other administrative enhancements, like new computer systems and call centers. Second, some State agencies supervise SNAP, but it is the States' counties that actually administer SNAP. In those States, some counties or groups of counties may be capable of accepting these other forms of signatures, while others may not use those technologies. The Department does not want to delay the use of these new systems until a State agency could operate them statewide.

The only signature format that would be statewide, as required in section 11(e)(2)(C)(iii)(III) of the Act, is the handwritten signature.

What does the Department mean by a gestured signature?

Although this is not currently used in the administration of SNAP, it is conceivable that a State agency would want to conduct an interview over a video link. In such a situation, an applicant with limited hearing could converse with the State agency in a language other than English, like American Sign Language (ASL) or another form of Manually Coded English (MCE), to use two examples.

Why is the Department proposing that gestured signatures be acceptable?

There are three reasons. First, it provides those with less acute hearing equal access to SNAP and promotes program access for these individuals.

Second, the Department does not want to impose the unnecessary burden of a handwritten signature if a State agency considers a gestured signature to

be legally sufficient under its own State laws.

Third, the Department envisions a gestured signature to be part of an interactive interview as described above regarding spoken signatures. If a gestured signature is acceptable to a State agency, there would be no reason to treat those with less acute hearing differently from those with more acute hearing.

Would all the restrictions and conditions about spoken and electronic signatures also apply to gestured signatures?

Yes, and for the same reasons.

Could a State agency require a household to provide an unwritten signature of any type?

No. The Act at section 11(e)(2)(C)(iii)(III) prohibits a State agency from taking any action to "deny or interfere with the right of the household to apply in writing". In addition, the SNAP regulations already provide that a State agency must make applications available to potential applicants and to other interested parties. For these reasons, the Department is proposing rules that will make it absolutely clear that a household has the right to obtain a printed application, to sign that application in writing, to submit that signed application, and thus to begin the process of application.

Handwritten communication is convenient, portable, and completely independent of modern technology. It is available to almost everyone. So while spoken signatures are extremely useful, particularly for those with less acute vision, the household's right to submit a handwritten signature must be preserved.

What changes is the Department proposing about handwritten signatures?

Only one, regarding signing with an "X". In 1980, FNS issued a policy memorandum that accepted an "X" as a valid signature. However, at that time FNS required that someone sign the application as a witness. The witness could be the person who accepted the application on the State agency's behalf. The Department's current policy is that a signature is acceptable if the State agency accepts it. So the Department is proposing to add "X" as an acceptable signature if the State agency decides that it is acceptable, and to remove the requirement that the "X" be witnessed. However, a State agency could continue to require a witness if the State's law requires it.

What are the requirements that the Department is proposing to place on all signatures?

The Act at section 11(e)(2)(C)(iii) requires that a State agency's system for spoken signatures meet certain requirements. We propose to extend the following requirements to all types of signatures:

- Record for future reference the assent of the household member and the information to which assent was given;
- Include effective safeguards against impersonation, identity theft, and invasions of privacy;
- Not deny or interfere with the right of the household to apply in writing;
- Promptly provide to the household member a written copy of the completed application, with instructions for a simple procedure for correcting any errors or omissions (except that this requirement does not apply to an application that a household signs by hand);
- Comply with the SNAP regulations regarding bilingual requirements; and
- Satisfy all requirements for a signature on an application under this Act and other laws applicable to SNAP, with the date on which the household member provides verbal assent considered as the date of application for all purposes.

Why is the Department proposing that all signatures meet these conditions?

These are sound administrative practices which will enhance both SNAP's integrity and households' security. With the exception of the provision about safeguards, these conditions are essentially already in place. Current SNAP regulations already require a State agency to maintain records, already define the date of application consistent with this provision, and already impose bilingual standards.

With regard to safeguarding privacy, the Department does not think that this requirement would be a significant burden to a State agency. State agencies already protect households' privacy by observing the regulations on the confidentiality of households' records (§ 272.1(c)) and by prudent administrative practices.

How would a State agency protect a household against impersonation?

The Department is not proposing a specific method for doing this. SNAP already requires that State agencies verify the identity of everyone who applies for SNAP. Identity is the only criterion that all SNAP households must verify, even under expedited service procedures and disaster programs. The Department thinks that ordinary verification of identity would be a sufficient safeguard in almost all circumstances; a State agency always has the authority to require additional verification when identity remains questionable even after the household provides initial verification.

Is the Department proposing similar changes for periodic reporting forms?

Yes. There are three types of periodic reporting systems—monthly, quarterly, and simplified, each with specific reporting requirements and forms. Periodic reporting forms are functionally equivalent to applications in that they are clients' signed statements of circumstances. Since non-written signatures suffice for applications, the Department believes that non-written signatures should also suffice for periodic reporting forms. However, as with applications, a State agency is not required to accept non-written signatures. (*See* proposed revisions at §§ 273.12(c)(4)(ii)(F), 273.12(d)(4)(ii)(F), and 273.21(h)(2)(vi)).

Is the Department proposing similar changes for the reporting forms used by change reporters?

No. There is no Federal requirement that a household assigned by the State agency to a change reporting system must sign the report form provided by the State agency. Therefore there is no need for Federal regulations that would accommodate non-written signatures for these forms.

Would SNAP's ordinary recordkeeping requirements, including timeframes, apply to these recordings?

Yes. Although the Department is not proposing this specifically, if the Department adopts this proposal as a final rule the recordkeeping requirements for case records would automatically apply to these recordings. These requirements appear in SNAP's regulations at § 272.1(f).

How does the Department propose to implement this provision?

We propose to amend various provisions in §§ 273.2(b), 273.2(c), 273.12(c) and (d), 273.14(b), and 273.21(h) to specify the conditions under which a household may attest to the accuracy of a SNAP application or a periodic report of changed information.

13. Employment and Training (E&T): Funding Cycle, Section 4122

How long are unexpended employment and training funds available?

Current rules at § 273.7(d)(1)(i) provide that each State agency will receive a 100 percent Federal grant each fiscal year to operate an E&T program. Regulations at § 273.7(d)(1)(i)(D) provide that if a State agency does not obligate or expend all of the funds allocated to it for a fiscal year, FNS will reallocate the unobligated, unexpended

funds to other State agencies each fiscal year or subsequent fiscal year. Prior to enactment of the FCEA, the Act provided these funds remain available until expended. However, Section 4122 of FCEA amended Section 16(h)(1)(A) of the Act (7 U.S.C. 2025(h)(1)(A)) to limit the time unspent unmatched Federal funding for E&T program expenses may remain available to 15 months. Unspent carryover funding will no longer remain available until expended.

The only reference in the regulations to the amount of time these funds will remain available can be found at § 273.7(d)(3)(ix); the regulations at § 273.7(d)(1) are silent on this matter. Therefore, the Department proposes to revise § 273.7(d)(3)(ix) to remove the reference that the funds allocated in accordance with paragraph § 273.7(d)(1) will remain available until obligated or expended. In accordance with current policy, if a State agency does not obligate or expend all of the funds allocated for a fiscal year, FNS will continue to reallocate the unobligated, unexpended funds to other State agencies as practicable within the legislatively mandated timeframe of 15 months. State agencies are encouraged to promptly advise FNS of all unobligated, unexpended funds. State agencies would continue to have 12 months to spend their annual Federal E&T grants.

14. Other State Options Proposed by FNS: Telephone Interviews at Initial Certification and Recertification

What is the current requirement concerning interviews at initial application and recertification?

Current regulations at § 273.2(e)(1) mandate a face-to-face interview at initial application and at least every 12 months after that, except for certain households certified for more than 12 months. Under § 273.2(e)(2), the State agency may waive the face-to-face interview in lieu of a telephone interview if requested by the household based on a hardship such as disability, inadequate transportation, or an employment conflict. If the State agency waives the face-to-face interview based on household hardship, it must document the waiver in the household's case file. Under § 273.14(b)(3), State agencies must meet the same interview requirements for households at recertification including a face-to-face interview and may waive the face-to-face interview as provided in § 273.2(e).

How is FNS is proposing to change the face-to-face interview?

FNS is proposing to amend §§ 273.2(e)(2) and 273.14(b)(3) to allow State agencies to use a telephone interview rather than a face-to-face interview without documenting hardship. State agencies would be required to provide a face-to-face interview if requested by the household or if the State agency determines that one is necessary. However, if a household that meets the State agency's hardship criteria requests to waive the in-office interview, the State agency would be required to conduct the interview by telephone or to schedule a home visit. FNS clarified this policy in a June 25, 2009 memorandum, which can be found on the FNS Web site at: *http://www.fns.usda.gov/snap/rules/Memo/2009/062509.pdf.*

Why is FNS proposing this change?

To date, FNS has approved 39 waivers allowing State agencies to use telephone interviews in lieu of face-to-face interviews at initial application and/or recertification without requiring that the agency document hardship in the case file. These waivers have benefited both State agencies by providing increased flexibility and households by eliminating the need to travel to the local office for a face-to-face interview. FNS has collected information on the outcomes of these waivers; these data indicates that substituting telephone interviews for in-office face-to-face interviews has had no discernible impact on quality control error rates. Making this policy an option in the regulations rather than a waiver simplifies State administration and eliminates the need for States to submit requests for FNS approval.

15. Other State Options Proposed by FNS: Averaging Student Work Hours

What is the student work requirement?

Under Section 6(e) of the Act (7 U.S.C. 2015(e)) and § 273.5(b), students enrolled at least half-time in an institution of higher education, are ineligible to participate in SNAP unless they meet at least one of several criteria. One criterion allows students to participate if they are employed for a minimum of 20 hours a week. In the absence of a methodology for calculating the 20-hour limit, FNS has interpreted this to mean that, as a condition of eligibility full-time college students must work a minimum of 20 hours every week.

How is FNS proposing to change the work requirement?

We propose to amend § 273.5(b)(5) to provide State agencies with the option to determine compliance with the 20-hour minimum work requirement by averaging the number of hours worked over the month using an 80-hour monthly minimum.

Why is FNS proposing this change?

FNS has approved waivers to 13 State agencies allowing them to average the number of hours worked over a month in determining compliance with the student work requirement of § 273.5(b)(5). These waivers provide State agencies with additional administrative flexibility and reduce the burden associated with determining compliance with an absolute minimum weekly standard. Averaging the numbers of hours worked also better reflects the nature of student employment, which frequently has a varied work schedule to accommodate academic demands. We also note that other SNAP work requirements, such as those for able-bodied adults without dependents (ABAWDs) mandated by § 273.24(a)(1), provide for the averaging of the number of hours worked to determine compliance with the requirement. Finally, SNAP eligibility is otherwise determined on a monthly rather than a weekly basis.

16. Miscellaneous: Proposed Corrections To Remove Outdated Language

Finally, FNS proposes to remove an outdated provision and to make other minor corrections. The provision that we propose to remove, § 272.3(c)(5), contains a reference to an outdated reference in the Act and is no longer relevant. Additionally, we propose to remove references to the Job Training Partnership Act (JTPA) at §§ 273.9(b)(1)(iii), 273.9(b)(1)(v), and 273.9(c)(10) and to replace them with current references to the Workforce Investment Act of 1998 (WIA).

II. Procedural Matters

Executive Orders 12866 and 13563

We have examined the impacts of this proposed rule as required by Executive Order 12866 on Regulatory Planning and Review (September 30, 1993) and Executive Order 13563 on Improving Regulation and Regulatory Review (January 18, 2011). Executive Orders 12866 and 13563 direct agencies to assess all costs and benefits of available regulatory alternatives and, if regulation is necessary, to select regulatory approaches that maximize net benefits (including potential economic, environmental, public health and safety effects, distributive impacts, and equity). Executive Order 13563 emphasizes the importance of quantifying both costs and benefits, of reducing costs, of harmonizing rules, and of promoting flexibility. This rule has been designated an "economically" significant rule, under section 3(f)(1) of Executive Order 12866. Accordingly,

the rule has been reviewed by the Office of Management and Budget. Consistent with the requirements of Executive Orders 12866 and 13563, a Regulatory Impact Analysis (RIA) was developed for this proposed rule.. The conclusions of this analysis are summarized below.

Statement of Need: This proposed rulemaking is necessary to amend SNAP regulations to implement provisions of the FCEA that establish new eligibility and certification requirements for the receipt of SNAP benefits. These provisions are intended to increase SNAP benefit levels for certain participants, reduce barriers to participation, and promote efficiency in the administration of the program.

Benefits: There are many potential societal benefits of this proposed rule. Some provisions, such as excluding combat-related income and excluding certain types of savings from resources, may make some households newly eligible for SNAP benefits. Other provisions, such as increasing the minimum standard deduction and minimum benefit, may increase SNAP benefits for certain households. Provisions such as expanding simplified reporting and allowing States to accept telephonic signatures will reduce the administrative burden for households and make it easier for households to apply for SNAP. We estimate that all the provisions contained in this rule will reduce household-level burden by over 20 million hours.

Costs: As noted above, the changes in the proposed rule result in a major reduction of paperwork burden for SNAP clients and State agencies. We estimated that this reduction in burden reflects an overall annualized cost savings of $147.4 million.

Transfers: The Department has estimated the total SNAP costs to the Federal Government of the FCEA provisions implemented in the proposed rule at $831 million in FY 2010 and $5.619 billion over the 5 years FY 2010 through FY 2014. These impacts are already incorporated into the President's budget baseline.

Regulatory Impact Analysis

0584–AD87

Supplemental Nutrition Assistance Program (SNAP): Eligibility, Certification, and Employment and Training Provisions of the Food, Conservation and Energy Act of 2008

I. Statement of Need

This proposed rulemaking is necessary to amend SNAP regulations to implement provisions of the FCEA that establish new eligibility and certification requirements for the receipt of SNAP. The rule would amend the SNAP regulations to: Exclude military combat pay from the income of SNAP households; raise the minimum standard deduction and the minimum benefit for small households; eliminate the cap on the deduction for dependent care expenses; index resource limits to inflation; exclude retirement and education accounts from countable resources; permit States to expand the use of simplified reporting; permit States to provide transitional benefits to households leaving State-funded cash assistance programs; allow States to establish telephonic signature systems; permit States to use E&T funds to provide post-employment job retention services; and limit the E&T funding cycle to 15 months. These provisions are intended to increase SNAP benefit levels for certain participants, reduce barriers to participation, and promote efficiency in the administration of the program.

II. Summary of Impacts

The Department has estimated the total SNAP costs to the Government of the FCEA provisions implemented in the proposed rule as $831 million in fiscal year (FY) 2010 and $5.619 billion over the 5 years FY 2010 through FY 2014. These impacts are already incorporated into the President's budget baseline. The Federal budget impacts are summarized below; these estimates are categorized as transfers in the accounting statement that follows.

TABLE 1—SUMMARY OF FEDERAL BUDGET IMPACTS

	FY2010	FY2011	FY2012	FY2013	FY2014	Total
Nomenclature Revisions—Section 4001	*	*	*	*	*	*
Military Combat Pay Exclusion—Section 4101	$1	$1	$1	$1	$1	$5
Increase the Standard Deduction Minimum to $144 in FY 2009 and Index—Section 4102	265	322	387	472	543	1,989
Eliminating the Dependent Care Deduction Cap—Section 4103	153	161	156	147	139	756
Indexing the Asset Limit—Section 4104(a)	0	0	0	0	4	4
Excluding Retirement Savings—Section 4104(b)	191	301	289	270	254	1,305
Excluding Educational Savings—Section 4104(c)	2	4	4	3	3	16
Simplified Reporting Expansion—Section 4105	114	179	171	160	151	775
Transitional Benefits Option—Section 4106	7	11	11	11	10	50
Minimum Benefit Increase—Section 4107	76	99	94	88	104	461
Employment and Training Funding for Job Retention—Section 4108	*	*	*	*	*	*
Telephonic Signature Systems—Section 4119	22	47	67	63	59	258
Employment and Training Cycle Reduction—Section 4122	*	*	*	*	*	*
Option to Conduct Telephone Interviews at Certification and Recertification	*	*	*	*	*	*
Option to Average Student Work Hours	*	*	*	*	*	*

As required by OMB Circular A–4, in Table 2 below, we have prepared an accounting statement showing the annualized estimates of benefits, costs and transfers associated with the provisions of this proposed rule.

TABLE 2—ACCOUNTING STATEMENT

	Primary estimate	Year dollar	Discount rate	Period covered
Benefits				
Qualitative: Provisions will improve program delivery by simplifying program rules, reducing reporting burdens, and providing States with greater administrative flexibility and options on how they administer the program. In addition, the provisions reflect Congressional desire to increase program access, for example, by excluding certain savings accounts from countable resources.				
Costs				
Annualized Monetized ($millions/year)	−138 −143	2010 2010	7% 3%	FY2010–2014
Transfers				
Annualized Monetized ($millions/year) From the Federal Government to Participating Households.	$1,111 $1,118	2010 2010	7% 3%	FY2010–2014

In the discussion that follows, we provide a section by section description of the potential impacts.

Section by Section Analysis of Impacts

Many of the cost estimates rely on microsimulation models to estimate the impacts of potential changes to SNAP on the number and characteristics of eligible and participating persons and the effect on total benefit costs. A microsimulation model is composed of an underlying database and a computer program with a set of parameters and methods. The database is constructed from a nationally representative sample of households and the set of parameters and methods translate the rules of SNAP into a series of conditions that determine a household's eligibility and benefit level. By changing the parameters and methods, we can evaluate whether a change to SNAP rules will have a relatively small or large effect on households and overall SNAP benefit costs. FNS has two microsimulation models: one uses SNAP Quality Control (QC) data [1] to estimate impacts on current SNAP participants and the other model uses the U.S. Census Bureau's Survey of Income and Program Participation (SIPP) [2] to estimate impacts on both potentially eligible households and current SNAP participants.

Nomenclature Revisions—Section 4001

Discussion: Section 4001 of the FCEA changed the name of the program from the Food Stamp Program to the Supplemental Nutrition Assistance Program or SNAP. This change in name reflects the fact that participants no longer receive stamps or coupons to make food purchases. Additionally, the new name reflects a focus on the nutritional aspect of the program. SNAP not only provides food assistance to low-income people, but also promotes nutrition to improve their health and well-being.

Effect on Low-Income Families: There could be some confusion among low-income families regarding the new program name. We expect that many people will continue to use the term Food Stamps and will adopt the new name of Supplemental Nutrition Assistance Program or SNAP over time.

Federal Cost Impact: We do not anticipate any additional cost to the Government from this name change. We are using the existing inventory of printed materials and will change the name and logos when we re-order materials.

Participant Impacts: We do not anticipate any significant change in participation resulting from the program name change.

Military Combat Pay Exclusion—Section 4101

Discussion: Current regulations define the permissible items that may be excluded from household income when determining SNAP eligibility. Section 4101 of FCEA amended section 5(d) of the Act to exclude special pay to United States Armed Services members that is received in addition to basic pay as a result of the member's deployment or service in a designated combat zone. The exclusion includes any special pay received pursuant to chapter 5 of title 37 of the USC and any other payment that is authorized by the Secretary. The special pay may include Combat, Imminent Danger, Hardship, Family Separation Allowance, Combat-related Injury and Rehabilitation Pay. To qualify for the exclusion, the pay must be received as a result of deployment to or service in a combat zone and must have not been received prior to deployment.

Effect on Low-Income Families: This provision affects a subset of what is already a small population: very few military families receive SNAP, approximately 2,000 households. Department of Defense studies [3] and SNAP QC both indicate that a small percentage of SNAP recipients serve in the Armed Forces.

Moreover, military SNAP recipients will qualify for the special pay income exclusions only during those time(s) that their military service specifically places them in a combat zone. We estimate that only 20 percent of SNAP military households would receive any of the relevant special pays.

Federal Cost Impact: There is minimal cost to the program for FY 2010 through FY 2014. The anticipated cost for FY 2010 is $1 million, which remains unchanged for each year through FY 2014, for a total 5 year cost of $5 million. These impacts are already incorporated into the President's budget baseline.

To estimate the effect of this provision, we assume that approximately 15 percent of the 2,000 military households receiving SNAP would receive special combat or imminent danger pay. This percentage comes from a Department of Defense Manpower Data Center report [4] that

[1] SNAP Quality Control Data available online at: *http://hostm142.mathematica-mpr.com/fns/.*

[2] For more information *see: http://www.census.gov/sipp/.*

[3] *Food Stamp Usage in the Military,* Unpublished Department of Defense Report, Office of the Under Secretary of Defense Personal and Readiness, Directorate of Compensation, Military Personnel Policy, May 2003.

[4] Active Duty Military Personnel Strengths by Regional Area and by Country Quarterly Report, Defense Manpower Data Center, Department of Defense, September 30, 2010.

indicates that 15 percent of the total Active Force is currently deployed to the war zones in Iraq and Afghanistan. The standard amount for combat or imminent danger pay is $225 [5] which would affect the SNAP benefit as follows: the $225 increase in monthly earned income would ordinarily decrease a military household's SNAP benefit by approximately $70.20 ($225 less 20 percent for earned income deduction times a 39 percent benefit reduction rate). This benefit reduction rate represents the average incremental change in benefits for each dollar change in the standard deduction (when we calculate the weighted average of the benefit reduction rate for households with and without the shelter deduction, we get an average benefit reduction rate of 39 percent).

The Family Separation Allowance is currently $250 per month,[6] and based on the Department of Defense Manpower Data Center report, we estimate that approximately 20 percent of military SNAP households may receive this pay—either due to deployment in a war zone or deployment to another location where the service member is not permitted to bring a family. Excluding the Family Separation Allowance from countable income would increase the household SNAP benefit by $78.

Hardship Duty Pay ranges between $50 and $150 per month.[7] We assume $100 per month for estimating purposes and that the same 15 percent deployed to the war zones also receive Hardship Duty Pay. Excluding the Hardship Duty Pay from countable income would increase the household SNAP benefit by $31.20. Finally, Combat Related Injury and Rehabilitation Pay ranges between $430 and $205 per month (depending on the receipt of Combat Pay, and only continues for approximately 3 months). Since the nature of a qualifying injury would be one that is serious enough to require rehabilitation, but not serious enough to separate the injured service member from the Armed Forces, we estimate that a very small percentage of military SNAP households (less than one percent) will receive this pay.

The total anticipated cost per year from excluding the various special pays as countable income is estimated at approximately $1 million. (The total number of households affected by a particular type of special pay is multiplied by the monthly amount of that pay, less the 20 percent earned income deduction and the 39 percent benefit reduction rate, multiplied by the number of months, 3 or 12, that the special pay is in effect).

Participation Impacts: No impact on current military SNAP participants is anticipated as a result of this provision, as the households that may be affected already receive SNAP. We do not anticipate that this provision will make any families newly eligible.

Uncertainty: Aside from anecdotal evidence that receives publicity from time to time; little research had been done to quantify the extent of SNAP participation in the Armed Forces. The Department of Defense has conducted its own studies during the late 1990s and as recently as 2003.[8] Those reports have typically found that very few (usually between 1000 and 2000) military households receive SNAP. FNS QC data also seem to corroborate the Department of Defense figures. Because these estimates are largely based on a non-USDA study and one of the employment status variables in the QC database, there is some uncertainty in their accuracy. The effect of this provision is also dependent on contingencies surrounding current military operations during this period. For example, the extent to which more or fewer military personnel will be required to deploy to combat zones in the future will affect the cost of this provision to the government. Finally, changes in military special pay and allowances may also alter the cost impact.

Increase the Standard Deduction Minimum to $144 in FY 2009 and Index—Section 4102

Discussion: The standard deduction is one of the allowable deductions subtracted from a household's gross monthly income to help determine a SNAP household's net income and benefit amount, if eligible. Current regulations set the standard deduction at 8.31 percent of the applicable net income limit based on household size, but no less than the deduction in place in 2002 ($134 for most households). Section 4102 of the FCEA, raised the minimum standard deduction for FY 2009 for the 48 States and the District of Columbia from $134 to $144. In addition, it changed the minimum standard deduction amounts for Alaska, Hawaii, the U.S. Virgin Islands, and Guam to $246, $203, $127, and $289, respectively. Beginning FY 2010 and each fiscal year thereafter, the minimum standard deduction is indexed to inflation.

Effect on Low-Income Families: This provision will affect some low-income families not already receiving the maximum SNAP benefit by allowing them to claim a larger standard deduction and to obtain higher SNAP benefits. Smaller households with one, two or three members will be affected by the provision—larger households will not be affected because their standard deduction is already higher than the amount provided in this provision, and they will be allowed to claim the larger of the two.

Federal Cost Impact: The cost to the Government is estimated to be $265 million in FY 2010 and $1.99 billion over the 5 years from FY 2010 through FY 2014. This cost was estimated using a simulation model [9] and 2007 QC data. These impacts are already incorporated in the President's budget baseline. We estimate that this provision results in a slight increase in benefits for current participants living in one, two and three-person households.

To estimate the effect of this provision, we assumed a change in the standard deduction beginning in FY 2009, where the new minimum standard deduction is equal to $144 and indexed to the Consumer Price Index (CPI) in FY 2010 and later. We then compared this revised standard deduction to the previous deduction. The previous deduction was the greater of $134 or 8.31 percent of the monthly Federal poverty guideline values by household size, as calculated by the U.S. Department of Health and Human Services (HHS) and used for SNAP eligibility standards. The guidelines are published in January or February of each year and are the SNAP net income limits in the following fiscal year. The poverty guidelines used for setting the FY 2010 SNAP net income limits were published on January 23, 2009. The poverty threshold values used in FY 2011 and beyond were calculated by inflating the FY 2010 values by the Calendar Year CPI for All Urban Consumers as forecasted in the Office of Management and Budget's economic assumptions. For each household size and for each year, these values were multiplied by 8.31 percent.

[5] For more information see Defense Finance and Accounting Service at *http://www.dfas.mil/army2/specialpay/hostilefireimminentdangerpay.html.*

[6] For more information see Defense Finance and Accounting Service at *http://www.dfas.mil/militarypay/woundedwarriorpay/familyseparationallowancefsa.html.*

[7] For more information see Figure 17–1. Hardship Duty Location Pay for Designated Areas: *http://comptroller.defense.gov/fmr/07a/07a_17.pdf.*

[8] *Food Stamp Usage in the Military,* Unpublished Department of Defense Report, Office of the Under Secretary of Defense Personal and Readiness, Directorate of Compensation, Military Personnel Policy, May 2003.

[9] Model technical documentation available online: *http://hostm142.mathematica-mpr.com/fns/.*

The new standard deduction, therefore, is the higher of the new minimum standard deduction of $144 in FY 2009 indexed to inflation, or 8.31 percent of the poverty level corresponding to household size. For example, for a three person family in FY 2009, the standard deduction of $144 is higher than $121, which is 8.31 percent of the poverty level for a three person household. This family would receive the higher standard deduction of $144, which represents a $10 increase from the previous minimum standard deduction of $134.

EXPECTED DOLLAR INCREASE IN THE SNAP STANDARD DEDUCTION BY HOUSEHOLD SIZE AND FISCAL YEARS 2009 THROUGH 2014

Household size	2009	2010	2011	2012	2013	2014
1 person	10	7	9	11	13	16
2 persons	10	7	9	11	13	16
3 persons	10	7	9	11	13	16
4 persons	0	0	0	0	0	0
5 persons	0	0	0	0	0	0
6+ persons	0	0	0	0	0	0

To determine the total cost of this proposal, we estimated the number of households affected for each household size and in each year. The projections were adjusted based on data for the proportion of households of each size receiving less than the maximum allotment, tabulated from 2007 QC data, the most recent data available. The cost of this provision was then calculated for each household size in each year. The cost equaled the product of the change in the standard deduction for each household size, the number of households affected, 12 months, and a benefit reduction rate of 39 percent. This is then applied to the standard deduction. The individual costs for each household size were summed in each year and rounded to the nearest million dollars.

Participant Impacts: While we do not expect this provision to significantly increase SNAP participation, we estimate that setting the standard deduction equal to $144 in FY 2009 and indexing to inflation will raise benefits among one, two and three-person households currently participating. In FY 2010 we estimate that approximately 13.7 million participants will receive higher benefits due to this provision, with an average increase in monthly benefits of $1.61 per participant.

Uncertainty: Because these estimates are largely based on recent 2007 QC data, they have a moderate level of certainty. To the extent that the distribution of SNAP households by household size and income changes over time, the cost to the Government could be larger or smaller. To the extent that actual poverty guidelines are higher or lower than projected, the cost to the Government could be larger or smaller.

Eliminating the Dependent Care Deduction Cap—Section 4103

Discussion: A deduction for dependent care costs is available when a SNAP household member must work, perform job seeking activities, attend required employment and training activities, or attend college or training in order to get a job. Under current regulations, there is a cap on the dependent care deduction of $200 for children under age 2 and $175 for older dependents. Section 4103 of the FCEA amended section 5(e)(3) of the Act by eliminating the cap on the deduction for dependent care expenses and allowing eligible households to deduct the full amount of their dependent care costs. In addition, dependent care expenses also include the costs of transporting dependents to and from the care facility and the costs of activity fees that are associated with dependent care.

Effect on Low-Income Families: The effect of this provision will be to increase the benefit of current SNAP participants who incur and claim dependent care costs in excess of the current cap, who do not already receive the maximum SNAP allotment. It will potentially make a small number of households with sizeable dependent care expenses, whose gross income is under the gross income threshold but whose net income currently exceeds the net income threshold, to become newly eligible.

Federal Cost Impact: The total cost to the Government of this provision is expected to be $153 million in FY 2010. The 5-year total for FY 2010 through FY 2014 is $756 million. These impacts are already incorporated into the President's FY 2010 budget baseline.

The cost to the Government of eliminating the dependent care cap is expected to be $82 million in 2010 and $408 million for the 5 years from FY 2010 through FY 2014. For this cost estimate, we used numbers produced by the Congressional Budget Office (CBO),[10] adjusted by changes in SNAP caseloads and issuance.

The cost to the Government of allowing transportation costs to be included in the dependent care deduction is expected to be $71 million in FY 2010. The 5-year total for FY 2010 through FY 2014 is $348 million.

To estimate the impact of allowing transportation costs, we used a micro-simulation model based on the 2007 QC data. We have no data for transportation costs associated with dependent care costs, but we do know that some States allow Temporary Assistance for Needy Families (TANF) participants to claim up to $60 per month. We simulated the impact of increasing the dependent care deduction by $60 for all households using the deduction. However, eleven States (Alabama, Arizona, Georgia, Illinois, Kentucky, Massachusetts, Missouri, Montana, Texas, Wisconsin, and the District of Columbia) already include transportation costs as an allowable dependent care expense, so we excluded those States from our simulation. The simulation estimates that the increased deduction will increase costs by 0.24 percent, or $143 million in FY 2010.

However, we had to make an adjustment because not all families with dependent care expenses incur any transportation costs. From the 2004 *Green Book,*[11] we know that 29 percent of families in poverty using some form of childcare have immediate family members provide childcare (such as staggered work schedules between parents, an unemployed father, or an older child), 19 percent use a relative or friend to care for the child in the child's home, 21 percent use a day care center, and 31 percent use a family day care home. We assume that those using

[10] Unpublished cost estimate provided by CBO.

[11] *2004 Green Book,* Background Material and Data on Programs Within the Jurisdiction of the Committee on Ways and Means, March 2004.

immediate family members don't use the dependent care deduction. We assume that none of those with children cared for at home incur transportation costs, all of those using a day care center incur transportation costs, and half of those using family day care homes incur transportation costs. Since roughly half of those who incur dependent care expenses also incur transportation costs, we halved the cost to $71 million in FY 2010.

We do not anticipate any significant cost impact from including activity fees in dependent care expenses.

Participation Impact: As a result of eliminating the dependent care cap, an estimated 479,000 people living in 145,000 households will receive larger benefits in FY 2010. We estimate that the average benefit increase per household will be $47 per month. We have no data on any new participants, but the number is expected to be minimal. These estimates are based on numbers provided by the CBO,[12] adjusted by changes in SNAP caseloads.

As a result of allowing transportation costs to be included as deductable dependent care expenses, we estimate that 614,000 individuals will receive larger benefits in FY 2010. Using the micro-simulation model based on 2007 QC data, we estimated the impact of increasing the dependent care deduction by $60, which is the amount that some States allow TANF households to claim. The model, which excludes the 11 States already allowing transportation costs to be counted, estimates that 3.51 percent of SNAP participants (1.2 million people) will receive larger benefits. However, because many households who claim the dependent care deduction do not incur transportation costs, we halve the estimate. We estimate that 614,000 people receive an average monthly benefit increase of nearly $9.68 per person in FY 2010.

Uncertainty: There is a moderate level of uncertainty associated with the estimate for eliminating the dependent care cap. The cost and participation impacts came from CBO, which derived their estimate from QC data. However, although the QC data file has a variable showing the actual dependent care expense, in many cases, the coded expense is the same amount as the cap. Thus, the QC data file underestimates the number of households that would receive a larger benefit if the dependent care expense deduction cap was eliminated. To address this limitation, the CBO, in their scoring, imputed dependent care values to many households with dependent care expenses. The accuracy of this estimate depends on the quality of their imputation.

There is a large degree of uncertainty associated with the estimate for including transportation costs and activity costs as allowable dependent care expenses. We have no data on the actual transportation or activity costs incurred by low-income families who have dependent care expenses, requiring us to make some broad assumptions.

Indexing the Asset Limit—Section 4104(a)

Discussion: Current regulations at § 273.8(b) limit SNAP households without disabled or elderly members to a maximum of $2,000 in resources and SNAP households with disabled or elderly members to a maximum of $3,000 in resources. This rule proposes to revise § 273.8(b) by indexing the current asset limits to inflation. The Department proposes to use the Consumer Price Index for All Urban Consumers published by the Bureau of Labor Statistics of the Department of Labor. Starting October 1, 2008, and each October 1 thereafter, the maximum allowable resources would be adjusted based on the previous year's rate of inflation. Each adjusted resource limit would be rounded down to the nearest $250.

Effect on Low-Income Families: This provision will allow some households to become newly-eligible for the program. It will not affect those currently participating. It also will not affect those who apply and are found to be categorically eligible and, thus, not subject to the asset test.

Moreover, based on assumptions regarding increases in the cost of living indices, the provision will have no impact until FY 2014, when the asset limit for households with elderly and disabled members increases. The asset limit for all other households will increase in FY 2016.

Federal Cost Impact: There is no cost impact for FY 2010 through FY 2013. The estimated cost to the Government in FY 2014 is $4 million for a total 5 year cost of $4 million. These impacts are already incorporated into the President's budget baseline.

To estimate the effect of this provision, we used data from the U.S. Census Bureau's 2005 SIPP which includes information on household income and expenses. We simulated the impact of increasing the asset limit from $3,000 to $3,250 for households with elderly and disabled members in FY 2014. In our simulation, the cost of benefits increases by 0.051 percent in FY 2014.

The first adjustment is to the participation rate of those made eligible by this provision. The simulation model overestimates the participation rate of those newly eligible. The model assumes that about half of those newly eligible will participate. However, studies on the impact of relaxing the asset limit show that only a quarter of new eligibles participate,[13] so we adjust the impact by halving it.

A second adjustment is to allow for a phase-in period. Studies on the impact of relaxing the asset limit show that it takes several years before all who ultimately come on the program are participating. For this estimate, we assume that the take-up period lasts three years. For FY 2014, we only assume a take-up rate of one-third. The cost estimate is $5 million for FY 2014.

Participation Impacts: Among current SNAP participants, there is no impact. However, this provision could make some families newly eligible if their assets are above the current limit but under the new limit. Some of these newly eligible families may choose to participate in the program, potentially increasing program costs. In our simulation, the number of participants increases by 0.042 percent in FY 2014. We applied the same adjustments as in the cost impact for the participation rate and phase-in period. The estimated number of new participants is 2,000 in FY 2014.

Uncertainty: Because these estimates are largely based on a model that uses a large national database, they have a moderate level of certainty. The data are based on information collected in fall 2005 and, to the extent that asset holdings of low-income households have changed since then, the cost to the Government could be larger or smaller. Also, to the extent that actual changes in the cost of living are larger or smaller than forecasted in the President's 2010 Budget, the asset limit may be adjusted sooner or later than the cost estimate assumes. Finally, we lack recent data showing the actual participation rate of eligible people with assets, so there is some uncertainty with the participation rate adjustment.

Excluding Retirement Savings—Section 4104(b)

Discussion: Current regulations include the value of funds held in

[12] Unpublished cost estimate provided by CBO.

[13] Wemmerus, Nancy and Bruce Gottlieb. *Relaxing the FSP Vehicle Asset Test: Findings from the North Carolina Demonstration*. Report submitted to the U.S. Department of Agriculture, Food and Nutrition Service. Alexandria, VA: Mathematica Policy Research, January 22, 1999.

Individual Retirement Accounts (IRAs) and Keogh plans as countable resources (but 401K retirement accounts are currently excluded) and applies the value toward the $2,000 asset limit ($3,000 for households with at least one disabled or elderly member). This provision excludes such accounts as countable resources.

Effect on Low-Income Families: This provision will allow some households to become newly eligible for the program if excluding IRAs and Keogh plans as countable resources lowers their assets below the asset limit. It will not affect those currently participating. It also will not affect those who apply and are found to be categorically eligible and, thus, not subject to the asset test.

Federal Cost Impact: We estimate that the cost to the Government of this provision will be $191 million in FY 2010 and $1.305 billion over the 5 years from FY 2010 through FY 2014. These impacts are already incorporated into the President's budget baseline.

To estimate the cost impact of this provision, we used SIPP data which includes information on household income and expenses. We simulated the impact of excluding IRA and Keogh accounts. In our simulation, the program cost increases by 1.71 percent.

However, the simulation model overestimates the participation rate of those newly eligible. The model assumes that about half of those newly eligible will participate. However, those with retirement savings typically have work histories and short eligibility spells, so we assume that only a small fraction—one-sixth—will actually participate. Thus, we divide the cost impact by three.

A second adjustment is to allow for a phase-in period. Studies on the impact of relaxing the asset limit show that it takes several years before all who ultimately come on the program are participating. For this estimate, we assume that the take-up period lasts three years. We assume a take-up rate of one-third in 2009 (the first year that this provision took effect), two-thirds in 2010, and 100 percent in FY 2011 through FY 2014.

Finally, four States—Illinois, Minnesota, Ohio, and Pennsylvania—already exclude retirement savings. The model does not incorporate this exclusion, so we make an out-of-model adjustment. The four States accounted for 14.27 percent of benefits issued in FY 2008, so we reduced the cost by the same percentage.

Thus, the cost estimate is $191 million for 2010. The cost estimate is $1.305 billion for the 5 year period from FY 2010 to FY 2014.

Participation Impacts: Among current SNAP participants, there is no impact. However, this provision could make some families newly eligible if excluding IRA and Keogh savings accounts causes their countable assets to fall below the asset limit. Some of these newly eligible families may choose to participate in the program, potentially increasing program costs. In our simulation, the number of participants increases by 1.39 percent.

We applied the same adjustments as in the cost impact for the participation rate and phase-in period. Finally, we make an out-of-model adjustment for the four States—Illinois, Ohio, Pennsylvania, and Minnesota—that already exclude all retirement savings accounts. The four States accounted for 13.84 percent of participants in FY 2008, so we reduced the number of new participants by that percentage. Thus, the estimated number of new participants is 93,000 in 2010 and 148,000 in 2011, when the take-up rate reaches 100 percent.

Uncertainty: Because these estimates are largely based on a model that uses a large national database, they have a moderate level of certainty. The data are based on information collected in fall 2005 and, to the extent that asset holdings of low-income households have changed since then, the cost to the Government could be larger or smaller. Finally, we lack recent data showing the actual participation rate of eligible people with assets, so there is some uncertainty with the participation rate adjustment.

Excluding Educational Savings—Section 4104(c)

Discussion: Current regulations include the value of funds held in tax-preferred education savings accounts (such as 529 College Savings accounts or Coverdale accounts) as countable resources and applies the value toward the $2,000 asset limit ($3,000 for households with at least one disabled or elderly member). This provision excludes such accounts as countable resources.

Effect on Low-Income Families: This provision will allow some households to become newly eligible for the program if excluding educational savings accounts as countable resources lowers their assets below the asset limit. It will not affect those currently participating. It also will not affect those who apply and are found to be categorically eligible and thus not subject to the asset test.

Federal Cost Impact: We estimate that the cost to the Government of this provision will be $2 million in FY 2010 and $16 million over the 5 years from FY 2010 through FY 2014. These impacts are already incorporated into the President's budget baseline.

SIPP data does not include information on educational savings accounts, so we used the 2004 Survey of Consumer Finances (SCF) [14] to tabulate the number of low-income households (defined as below 200 percent of poverty) that had educational savings accounts and compared that figure to the number that had IRAs or Keogh accounts. According to the SCF, approximately 2 million low-income households had IRA or Keogh accounts, but only 28,000 (1.4 percent) had educational savings accounts. We estimated the cost impact of excluding educational savings accounts as being 1.4 percent of the impact of excluding IRA and Keogh accounts, or 0.024 percent (1.71 percent times 1.40 percent).

However, the simulation model overestimates the participation rate of newly-eligible. The model assumes that about half of those newly-eligible will participate. However, those with education savings typically have work histories and short eligibility spells, so we assume that only a small fraction—one-sixth—will actually participate.[15] Thus, we divide the cost impact by three.

A second adjustment is to allow for a phase-in period. Studies on the impact of relaxing the asset limit show that it takes several years before all who ultimately come on the program are participating. For this estimate, we assume that the take-up period lasts three years. We assume a take-up rate of one-third in 2009, two-thirds in 2010, and 100 percent in 2010–2014.

Finally, six States—Illinois, Massachusetts, Maryland, Michigan, Ohio, and Pennsylvania—already exclude retirement savings. The model does not incorporate this exclusion, so we make an out-of-model adjustment. The six States accounted for 21.57 percent of benefits issued in FY 2008, so we reduced the cost by that percentage.

Thus, the cost estimate is $2 million for 2010. The cost estimate is $16 million for the 5 year period from FY 2010 to FY 2014.

Participation Impacts: Among current SNAP participants, there is no impact. However, this provision could make some families newly eligible if

[14] For more information *see: http://www.federalreserve.gov/pubs/oss/oss2/scfindex.html.*

[15] There is no extant data to estimate how many households made newly-eligible by this provision would choose to participate. This assumption is based on the professional judgment of Federal SNAP administrators.

excluding educational savings causes their countable assets to fall below the asset limit. Some of these newly eligible families may choose to participate in the program, potentially increasing program costs.

SIPP data does not include information on educational savings account, so we used the SCF to tabulate the number of low-income households (defined as below 200 percent of poverty) that had educational savings accounts and compared that figure to the number that had IRAs or Keogh accounts. According to the SFC, approximately 2 million low-income households had IRA or Keogh accounts, but only 28,000 (1.4 percent) had educational savings accounts. We estimated the participant impact of excluding educational savings accounts as being 1.4 percent of the impact of excluding IRA and Keogh accounts, or 0.019 percent (1.39 percent times 1.40 percent).

We applied the same adjustments as in the cost impact for the participation rate and phase-in period. Finally, six States—Illinois, Massachusetts, Maryland, Michigan, Ohio, and Pennsylvania—already exclude retirement savings. The model does not incorporate this exclusion, so we make an out-of-model adjustment. The six States accounted for 21.31 percent of participants issued in FY 2008, so we reduced the number of new participants by that percentage.

Thus, the estimated number of new participants is 1,000 in 2010 (34,972,000 baseline participants times the 0.019 percent impact, times the 33.33 percent participation adjustment, times the 66.67 percent take-up rate adjustment, and times the 78.69 percent from excluding the six States).

Uncertainty: There is a moderate amount of uncertainty with these estimates. The estimates are derived from using the ratio of people with educational savings accounts to IRAs and Keogh accounts and applying it to the SIPP-based micro-simulation result. This assumes that excluding the educational accounts will have the same proportional impact, which is a reasonable, but untested hypothesis. Moreover, the SIPP data are based on information collected in fall 2005 and the SCF data is based on information collected in 2004. To the extent that asset holdings of low-income households have changed since the data were collected, the cost to the Government could be larger or smaller.

Simplified Reporting Expansion—Section 4105

Discussion: Simplified reporting is an option available to State agencies under SNAP regulations at § 273.12(a)(5) that requires minimal household reporting in comparison to the other types of household reporting systems that are available to State agencies under the SNAP regulations. Section 4105 of the FCEA removed a restriction that had discouraged State agencies from placing certain households (homeless, migrant and seasonal farm workers, and elderly or disabled adults with no earned income) on simplified reporting.

Effect on Low-Income Families: This provision will reduce the paperwork burden on low-income participants in the States that implement it by over 200,000 burden hours. It may result in more families continuing to receive benefits, given that they will be required to submit fewer reports in order to maintain eligibility.

Federal Cost Impact: The cost to the Government is estimated to be $114 million in FY 2010 and $775 million over the 5 years from FY 2010 through FY 2014. These impacts are already incorporated in the President's budget baseline.

The cost of this provision comes from the income changes that are no longer captured as quickly with simplified reporting which, in turn, may affect benefit levels. Our approach is to measure the difference between a perfect change reporting system, where all income changes are captured in a timely manner, to a system where no income changes are reported. Then we reduce this difference by the misreporting already occurring for elderly and disabled SNAP participants. The result is the reporting changes that are lost to simplified reporting.

To determine the cost to the government, we use a simulation model with SIPP data to estimate the benefit impact from perfect change reporting to ignoring all income changes. From this we subtract the small percentage of over and underpayments that occur from errors in reporting income (less than one percent). We then factor in the percentage of households that we estimate will continue to report changes more frequently than required (10 percent of households), and the percentage of States that we estimate are likely to act on those changes (50 percent of States). From this we determine a net cost, and adjust it by an assumed State take-up rate of 33 percent in 2009, 67 percent in 2010 and 100 percent in 2011 and beyond.

Participant Impacts: This provision affects participants in the States that opt to implement it. All households who are placed in a simplified reporting system benefit by reduced frequency of required reporting.

Uncertainty: There is uncertainty in the number of households that will continue to report changes with greater frequency than is required, the percentage of States that will take action based on information that is reported more frequently than is required, and the number of States that will implement this option. In general, increases in income occur more often for low-income households than do decreases in income. If delayed reporting results in higher income not being reported sooner, then we would anticipate the cost to the Government to be higher.

Transitional Benefits Option—Section 4106

Discussion: Prior to the FCEA, transitional benefits were available only to those leaving the TANF program. Section 4106 of the FCEA allowed States to provide transitional benefits to families leaving State-funded cash assistance programs. Programs that would not be eligible under this provision include programs that are funded by local level governments and programs that do not provide a cash benefit.

Effect on Low-Income Families: This provision provides low-income families leaving State-funded assistance programs with five additional months of SNAP benefits. As a result, these families have more money available for food, helping ease the transition out of State cash assistance programs.

Federal Cost Impact: The cost to the Government is estimated to be $7 million in FY 2010 and $50 million over the 5 years from FY 2010 through FY 2014. These impacts are already incorporated in the President's budget baseline.

To determine the cost to the Government, using SNAP QC data we first estimated the monthly cost of transitional benefits for households with children leaving TANF at approximately $54. We used this per household cost as a proxy for the per household cost of families with children leaving State-funded assistance programs. We then multiplied the per household cost by 22,000 households estimated to leave State-funded assistance programs to determine the maximum total cost. Additionally, we applied phase-in assumptions to account for the phase-in of this provision among the States with State-funded benefits. We assume that

25 percent of States with State-funded benefits would implement this provision in 2009, increasing to a maximum of 75 percent of these States in 2011.

Participant Impacts: This provision will not increase the number of participants, but it will allow households with children receiving State-funded cash assistance to extend their SNAP benefits for a period of five months after they stop receiving cash assistance.

Uncertainty: The cost of this provision could vary depending on the number and timing of States that choose to implement it. It could also increase if more States adopted State-funded cash assistance programs, but this appears unlikely given the relatively static number of States that have offered these benefits over time.

Minimum Benefit Increase—Section 4107

Discussion: Current regulations set the minimum benefit at $10.00. Section 4107 of the FCEA mandated that, effective October 1, 2008 and each fiscal year thereafter, the minimum benefit amount for households of one and two persons is 8 percent of the maximum allotment for a household of one, rounded to the nearest whole dollar.

Effect on Low-Income Families: This provision will affect low-income participants receiving the minimum benefit by increasing their monthly benefit. An eligible household's SNAP benefit is computed by subtracting 30 percent of its net income from the maximum benefit. All one and two person households are guaranteed to receive at least the minimum benefit (except during the initial month of participation).

Federal Cost Impact: The cost to the Government is $76 million in FY 2010 and $461 million over the 5 years from FY 2010 through FY 2014. These impacts are already incorporated in the President's budget baseline. Using the microsimulation model with 2007 QC data, we estimate that in FY 2010 this provision increases benefits for approximately 3.6 percent of participants, or 1.25 million people, who will receive an average monthly benefit increase of $5.

The cost of this provision was estimated by comparing the previous minimum benefit of $10 to 8 percent of the one-person maximum allotment.

EXPECTED DOLLAR INCREASE IN SNAP MINIMUM BENEFIT

[By fiscal years 2009 through 2014]

Household size	2009	2010	2011	2012	2013	2014
Minimum benefit under prior law	10	10	10	10	10	10
Minimum benefit under current law	14	15	15	15	16	16

The estimate cost of raising the minimum benefit was derived using a microsimulation model with FY 2007 QC data. The model indicated that the provision would increase total SNAP benefits by 0.13 percent in FY 2010, increasing to 0.20 percent of total benefits in FY 2014. We then applied this percentage to total baseline benefits to derive the total cost.

Participant Impacts: The model indicated that in 2010 approximately 3.6 percent of participants will receive higher benefits. We applied this percentage to the total number of participants and determined that approximately 1.25 million participants will receive a benefit increase due to this provision, with an average monthly benefit increase per affected participant of $5 in FY 2010, rising to $7 in FY 2014.

Uncertainty: There is a small degree of uncertainty associated with the estimate to raise the minimum benefit. The estimate is based on 2007 QC data and assumes that the proportion of participants receiving the minimum benefit will remain constant over time. If the proportion of participants receiving the minimum benefit were to increase or decrease, the cost of this provision would also increase or decrease accordingly.

Employment and Training Funding for Job Retention—Section 4108

Discussion: Section 6(d)(4) of the Act (7 U.S.C. 2015(d)(4)) specifies components that State agencies must include as part of E&T programs. Current regulations at § 273.7(e)(1) provide for seven approved uses of (Employment and Training) E&T funds. Section 4108 of the FCEA amended Section 6(d)(4) of the Act to add a new approved use of E&T funds. Job retention services for up to 90 days to an individual who secured employment after receiving other employment/training services under the E&T program offered by the State agency. It also clarifies that any individual voluntarily electing to participate in an E&T program is not subject to the hour of work limitation.

Effect on Low-Income Families: This provision could enable participants to more rapidly acquire the skills they need to become employed or increase their earnings, which could have a positive effect on family income.

Federal Cost Impact: We do not anticipate any significant cost impact to the Government from this provision, through either a change in benefits or State spending on E&T services.

Participant Impacts: We do not anticipate an effect on SNAP participation from this provision.

Telephonic Signature Systems—Section 4119

Discussion: Under current regulations there is no provision for accepting a spoken or gestured signature. This provision allows States to establish a system by which an applicant may sign an application through a recorded verbal agreement over the telephone.

Effect on Low-Income Families: This option would allow new low-income participants to begin receiving benefits an estimated three days sooner. We estimate that for the average newly participating household, this could provide approximately $25 to $30 in additional benefits at the start of their benefit receipt.

Federal Cost Impact: The cost to the Government is estimated to be $22 million in FY 2010 and $258 million over the 5 years from FY 2010 through FY 2014. These impacts are already incorporated in the President's budget baseline. We estimate that this provision will provide benefits 2–3 days sooner than if applicants mailed their applications.[16] The cost estimate is based on an additional 3 days of benefits for new applicant households.

To estimate this provision, we examined the baseline participant estimates for each fiscal year and derived the expected year to year

[16] This assumption is based on the professional judgment of Federal SNAP administrators.

growth in the number of participants. We then took the average monthly participant benefit and multiplied it by 2.23 to create the average household benefit. The 2007 QC data indicates that the average household benefit is 2.23 times the average monthly benefit per participant. We then divided the monthly household benefit by 30 (days) to determine the average value of one day of household benefits, and multiplied that by 3 (days) to come up with the average cost of three additional days of household benefits.

Furthermore, we did not assume that all States would take up this option immediately, or ever. We assume a phase-in for this provision, with States providing telephonic signatures to 2 percent of new participants in FY 2009, increasing to a maximum of 15 percent [17] of new participants in FY 2012 and beyond.

Participant Impacts: We do not anticipate any significant impact on the number of participants from this provision. However, it will provide benefits to participants sooner than if all applications were required to be mailed. The total number of new participants affected depends on the number of States choosing the option of telephonic signatures. At most, we estimate that 15 percent of new participants will sign their applications telephonically.

Uncertainty: The uncertainty in this provision relates to the number of States that will take up this option. We assume that at most, States will utilize this option for 15 percent of new participants. If more or fewer States were to choose this option, the number of participants receiving benefits sooner would either increase or decrease accordingly.

Employment and Training Cycle Reduction—Section 4122

Discussion: Current rules at § 273.7(d)(1)(i) provide that each State agency will receive a 100 percent Federal grant each fiscal year to operate an E&T program. Regulations at § 273.7(d)(1)(i)(D) provide that if a State agency does not obligate or expend all of the funds allocated to it for a fiscal year, FNS will reallocate the unobligated, unexpended funds to other State agencies each fiscal year or subsequent fiscal year. Prior to enactment of the FCEA, the Act provided these funds remain available until expended. However, Section 4122 of FCEA amended Section 16(h)(1)(A) of the Act (7 U.S.C. 2025(h)(1)(A)) to limit the time unspent unmatched Federal funding for E&T program expenses may remain available to 15 months. Unspent carryover funding will no longer remain available until it's expended.

Effect on Low-Income Families: We do not anticipate any effect on low-income families from this provision.

Federal Cost Impact: We do not anticipate any significant cost impact for the Government from this provision.

Participant Impacts: We do not anticipate any impact on participation from this provision.

Option To Conduct Telephone Interviews at Certification and Recertification

Discussion: FNS is proposing to amend §§ 273.2(e)(2) and 273.14(b)(3) to allow State agencies to use a telephone interview rather than a face-to-face interview without documenting hardship. State agencies would be required to provide a face-to-face interview if requested by the household or if the State agency determines that one is necessary. However, if a household that meets the State agency's hardship criteria requests to waive the in-office interview, the State agency would be required to conduct the interview by telephone or to schedule a home visit.

Effect on Low-Income Families: We do not anticipate any effect on low-income families from this provision.

Federal Cost Impact: We do not anticipate any significant cost impact for the Government from this provision since many States are already employing this option. FNS has approved 39 waivers allowing State agencies to use telephone interviews in lieu of face-to-face interviews if requested by the household or if the State agency determines that one is necessary.

Participant Impacts: We do not anticipate any impact on participation from this provision.

Option To Average Student Work Hours

Discussion: Under Section 6(e) of the Act and § 273.5(b), students enrolled at least half-time in an institution of higher education, are ineligible to participate in SNAP unless they meet at least one of several criteria. One criterion allows students to participate if they are employed for a minimum of 20 hours a week. We propose to amend § 273.5(b)(5) to provide State agencies with the option to determine compliance with the 20-hour minimum work requirement by averaging the number of hours worked over the month using an 80-hour monthly minimum.

Effect on Low-Income Families: This provision may enable some low-income students to become eligible for SNAP if the student is able to meet the minimum work requirement under the proposed State option. The number of students who may become eligible for SNAP is likely very small so that the cost impact would be minimal.

Federal Cost Impact: We do not anticipate any significant cost impact for the Government from this provision, as some States are already employing this option. FNS has approved waivers to 13 State agencies allowing them to average the number of hours worked in determining compliance with the student work requirement.

Participant Impacts: We do not anticipate any impact on participation from this provision.

III. Alternatives Considered

Most aspects of the proposed rule are non-discretionary and tie to explicit, specific requirements for SNAP in the FCEA. The mandatory effective date of most SNAP provisions in the FCEA was October 1, 2008. However, the Department did consider alternatives in implementing of Section 4103 of the FCEA, *Elimination of caps on dependent care deduction.*

Section 5(e)(3) of the Act specifies that the actual costs that are necessary for the care of a dependent may be deducted if the care enables a household member to accept or continue employment, or to participate in training or education in preparation for employment. Section 4103 of the FCEA eliminated the caps that had been placed on the amount of monthly dependent care costs that households could deduct; eligible households have been able to deduct the full amount of their dependent care costs since the October 1, 2008 effective date for this provision.

Only those expenses that are separately identified, necessary to participate in the care arrangement, and not already paid by another source on behalf of the household would be deductible. As part of the proposed rule, the Department is clarifying the types of *dependent care expenses permitted under the deduction. It considered the following alternatives:*

- *Include the costs of transporting dependents to and from care and separate activity fees charged by the care provider required for the care arrangement.* During the floor discussions prior to passage of the FCEA, it was recognized that some States already allow transportation costs to be deducted for dependent care, but no limit was placed in the law. This

[17] There is no extant data on how many States might choose this option. This assumption is based on the professional judgment of Federal SNAP administrators.

change would result in a nominal increase in program costs, but would ensure that national policy is consistent in ensuring that dependent care-related transportation costs do not compromise access to the program for clients.

• *Limit the deductions to direct compensation to the care provider. Historical policy applied the deduction more narrowly to direct compensation to the care provider. Like the option above, this would create a consistent national policy. It would nominally lower program costs, but would force some* States to eliminate these deductions and may result in an increased administrative burden for States.

After careful consideration, the Department chose the first alternative. The removal of the dependent care caps by the FCEA indicates an important shift by Congress in recognizing that associated costs represent a major expense for working households, and this alternative appropriately recognizes that dependent care involves many different types of costs, including transportation costs and fees charged for activities in structured dependent care programs.

IV. References

Food Stamp Usage in the Military, Unpublished Department of Defense Report, Office of the Under Secretary of Defense Personal and Readiness, Directorate of Compensation, Military Personnel Policy, May 2003.

Leftin, Joshua, Andrew Gothro and Esa Eslami. *Characteristics of Supplemental Nutrition Assistance Households: Fiscal Year 2009.* Report submitted to the U.S. Department of Agriculture, Food and Nutrition Service. Alexandria, VA: Mathematica Policy Research, October 2010. *http://www.fns.usda.gov/ora/menu/Published/SNAP/FILES/Participation/2009Characteristics.pdf.*

Wemmerus, Nancy and Bruce Gottlieb. *Relaxing the FSP Vehicle Asset Test: Findings from the North Carolina Demonstration.* Report submitted to the U.S. Department of Agriculture, Food and Nutrition Service. Alexandria, VA: Mathematica Policy Research, January 22, 1999. *http://www.mathematica-mpr.com/publications/pdfs/relaxreport1.pdf.*

2004 Green Book, Background Material and Data on Programs Within the Jurisdiction of the Committee on Ways and Means, March 2004. *http://www.gpoaccess.gov/wmprints/green/index.html.*

SNAP Quality Control Data available online at: *http://hostm142.mathematica-mpr.com/fns/.*

Technical documentation for microsimulation models available online at: *http://hostm142.mathematica-mpr.com/fns/.*

U.S. Census Bureau Survey of Income and Program Participation: *http://www.census.gov/sipp/.*

The Federal Reserve Board Survey of Consumer Finances: *http://www.federalreserve.gov/pubs/oss/oss2/scfindex.html.*

Active Duty Military Personnel Strengths by Regional Area and by Country Quarterly Report, Defense Manpower Data Center, Department of Defense, September 30, 2010. *http://siadapp.dmdc.osd.mil/personnel/MILITARY/history/hst1009.pdf.*

Defense Finance and Accounting Service Hostile Fire and Imminent Danger Pay: *http://www.dfas.mil/army2/specialpay/hostilefireimminentdangerpay.html.*

Defense Finance and Accounting Service Family Separation Allowance: *http://www.dfas.mil/militarypay/woundedwarriorpay/familyseparationallowancefsa.html.*

Hardship Duty Location Pay for Designated Areas, *see* Figure 17–1: *http://comptroller.defense.gov/fmr/07a/07a_17.pdf.*

Executive Order 13175

USDA will undertake, within 6 months after this rule becomes effective, a series of Tribal consultation sessions to gain input by elected Tribal officials or their designees concerning the impact of this rule on Tribal governments, communities and individuals. These sessions will establish a baseline of consultation for future actions, should any be necessary, regarding this rule. Reports from these sessions for consultation will be made part of the USDA annual reporting on Tribal Consultation and Collaboration. USDA will respond in a timely and meaningful manner to all Tribal government requests for consultation concerning this rule and will provide additional venues, such as Webinars and teleconferences, to periodically host collaborative conversations with Tribal leaders and their representatives concerning ways to improve this rule in Indian country.

The policies contained in this rule would not have Tribal implications that preempt Tribal law.

Regulatory Flexibility Act

The Regulatory Flexibility Act (5 U.S.C. 601–612) requires Agencies to analyze the impact of rulemaking on small entities and consider alternatives that would minimize any significant impacts on small entities. Pursuant to that review, it is certified that this proposed rule would not have a significant impact on small entities.

The provisions of this proposed rule, affecting the eligibility, benefits, certification, and employment and training requirements for applicant or participant households in the Supplemental Nutrition Assistance Program (SNAP), are implemented through State agencies, which are not small entities as defined by the Regulatory Flexibility Act. In addition, the majority of this rule's provisions have been in implementation since the enactment of the Food, Conservation, and Energy Act of 2008 (FCEA). This rule proposes to amend the SNAP regulations to be consistent with the requirements of FCEA.

Unfunded Mandates Reform Act

Title II of the Unfunded Mandates Reform Act of 1995 (UMRA), Public Law 104–4, establishes requirements for Federal agencies to assess the effects of their regulatory actions on State, local, and Tribal governments and the private sector. Under Section 202 of the UMRA, the Department generally must prepare a written statement, including a cost/benefit analysis, for proposed and final rules with Federal mandates that may result in expenditures to State, local, or Tribal governments in the aggregate, or to the private sector, of $100 million or more in any one year. When such a statement is needed for a rule, Section 205 of the UMRA generally requires the Department to identify and consider a reasonable number of regulatory alternatives and adopt the least costly, more cost-effective or least burdensome alternative that achieves the objectives of the rule.

This rule contains no Federal mandates (under the regulatory provisions of Title II of the UMRA) that impose costs on State, local, or Tribal governments or to the private sector of $100 million or more in any one year. This rule is, therefore, not subject to the requirements of Sections 202 and 205 of the UMRA.

Executive Order 12372

SNAP is listed in the Catalog of Federal Domestic Assistance under No. 10.551. For the reasons set forth in the final rule in 7 CFR 3015, subpart V and related Notice (48 FR 29115), the Program is included in the scope of Executive Order 12372, which requires intergovernmental consultation with State and local officials.

Federalism Impact Statement

Executive Order 13132 requires Federal agencies to consider the impact of their regulatory actions. Where such actions have federalism implications, agencies are directed to provide a statement for inclusion in the preamble to the regulations describing the agency's considerations in terms of the three categories called for under section

(6)(b)(2)(B) of the Executive Order 13132.

Prior Consultation With State Officials

After the FCEA was enacted on June 18, 2008, FNS held a series of conference calls with State agencies and FNS regional offices to explain the SNAP provisions included in the public law and to answer questions that State agencies had about implementing the changes to the program. On July 3, 2008, FNS issued an implementation memorandum that described each SNAP-related provision in the FCEA and provided basic information to assist State agencies in meeting statutorily-mandated implementation timeframes. FNS responded to additional questions that State agencies submitted and posted the answers on the FNS Web site. Another forum for consultation with State officials on implementation of the FCEA provisions included various conferences hosted by FNS regional offices, State agency professional organizations, and program advocacy organizations. During these conferences, held in the latter part of 2008 and early months of 2009, FNS officials responded to a range of questions posed by State agency officials related to implementation of FCEA provisions.

Nature of Concerns and the Need To Issue This Rule

This rule proposes to implement changes required by the FCEA. State agencies were generally interested in understanding the timeframes for implementing the various provisions and the implications of the statutory provisions on State agency administration workload and on applicants and participants. FNS was able to answer questions that directly related to the mandatory or optional nature of the provisions and to confirm the statutorily-mandated timeframes for implementation. FNS was also able to respond to questions that involved current regulations or written policy. An example of such an issue was whether uncapped dependent care claimed by an applicant or participant must be verified. FNS was able to answer this question by drawing on current policy at § 273.2(f), which requires that dependent care expenses, like other household costs, must only be verified if questionable or if the State agency opts to require verification of such costs. However, State agencies raised a number of questions that required policy development and could not be answered without promulgation of a new rulemaking. These types of questions raised by State agencies or program advocacy organizations contributed directly to the development of policy proposed in this rule. For example, State agencies asked whether transportation costs associated with getting a dependent to and from care could be counted as part of dependent care expenses and thus be deducted. Specific SNAP policy on this issue had not been sufficiently developed prior to this rule; thus, we have proposed a clarification in this area.

Extent to Which We Met Those Concerns

FNS has considered the impact of the proposed rule on State and local agencies. This rule proposes to make changes that are required by law. All but two of the provisions in this rule would implement provisions of the FCEA, which were effective on October 1, 2008. The two additional provisions that we have proposed are discretionary in nature and would give State agencies regulatory options that currently may only be waived through SNAP's administrative waiver request procedures.

Executive Order 12988

This rule has been reviewed under Executive Order 12988, Civil Justice Reform. This rule is intended to have preemptive effect with respect to any State or local laws, regulations or policies that conflict with its provisions or that would otherwise impede its full implementation. This rule is not intended to have retroactive effect unless so specified in the "Effective Date" paragraph of this rule. Prior to any judicial challenge to the provisions of this rule or the application of its provisions, all applicable administrative procedures must be exhausted. In the Supplemental Nutrition Assistance Program, the administrative procedures are as follows: (1) For program benefit recipients—State administrative procedures issued pursuant to Section 11(e) of the Act (7 U.S.C. 2020(e)(1)) and regulations at § 273.15; (2) for State agencies—administrative procedures issued pursuant to Section 14 of the Act (7 U.S.C. 2023) and regulations at § 276.7 (for rules related to non-Quality Control liabilities) or part 283 (for rules related to Quality Control liabilities); (3) for Program retailers and wholesalers—administrative procedures issued pursuant to Section 14 of the Act (7 U.S.C. 2023) and 7 CFR 279.

Civil Rights Impact Analysis

FNS has reviewed this proposed rule in accordance with the Department Regulation 4300–4, "Civil Rights Impact Analysis," to identify and address any major civil rights impacts the rule might have on minorities, women, and persons with disabilities. After a careful review of the rule's intent and provisions, and of the characteristics of SNAP households and individual participants, we have determined that this rule would not have a disproportionate impact on any of these groups. We have no discretion in implementing many of these changes. The changes that are required to be implemented by law have already been implemented as of October 1, 2008. FNS expects that the discretionary provisions included in this proposed rule will benefit applicants and participants that are among the protected classes of individuals. All data available to FNS indicate that protected individuals have the same opportunity to participate in SNAP as non-protected individuals. FNS specifically prohibits the State and local government agencies that administer the Program from engaging in actions that discriminate based on race, color, national origin, sex, religion, age, disability, marital or family status (SNAP's nondiscrimination policy can be found at § 272.6(a)). Where State agencies have options, and they choose to implement a certain provision, they must implement it in such a way that it complies with the regulations at § 272.6.

Paperwork Reduction Act

The Paperwork Reduction Act of 1995 (44 U.S.C. Chapter 35; *see* 5 CFR part 1320) requires that OMB approve all collections of information by a Federal agency from the public before they can be implemented. Respondents are not required to respond to any collection of information unless it displays a current valid OMB control number. This proposed rule contains new provisions that will affect reporting and recordkeeping burdens under currently approved collections and will be merged into OMB No. 0584–0064 and No. 0584–0083 once approved by OMB. The changes in burden that would result from the provisions in the proposed rule are described below, and are subject to review and approval by OMB. When the information collection requirements have been approved, FNS will publish a separate action in the **Federal Register** announcing OMB's approval.

Comments on the information collection in this proposed rule must be received by July 5, 2011. Send comments to the Office of Information and Regulatory Affairs, OMB, *Attention:* Desk Officer for FNS, Washington, DC 20503. Please also send a copy of your comments to Lizbeth Silbermann, Supplemental Nutrition Assistance Program, Food and Nutrition Service,

U.S. Department of Agriculture, 3101 Park Center Drive, Room 812, Alexandria, Virginia 22302. For further information, or for copies of the information collection requirements, please contact Ms. Silbermann at the address indicated above.

Comments are invited on: (1) Whether the proposed collection of information is necessary for the proper performance of the Agency's functions, including whether the information will have practical utility; (2) the accuracy of the Agency's estimate of the proposed information collection burden, including the validity of the methodology and assumptions used; (3) ways to enhance the quality, utility and clarity of the information to be collected; and (4) ways to minimize the burden of the collection of information on those who are to respond, including use of appropriate automated, electronic, mechanical, or other technological collection techniques or other forms of information technology.

All responses to this request for comments will be summarized and included in the request for OMB approval. All comments will also become a matter of public record.

OMB Number: 0584—NEW

Title: Supplemental Nutrition Assistance Program Forms—Applications, Periodic Reporting, and Notices.

Type of Request: New.

Abstract: This rule proposes to codify into SNAP regulations 12 provisions from FCEA and to make conforming changes throughout § 273, including the change to the program's name. The rule also proposes two changes to the SNAP certification and eligibility regulations to provide State options that are currently available only through waivers. The FCEA provisions affect eligibility, benefits, and certification of program participants as well as the employment and training (E&T) portion of the program. This rulemaking proposes a new information collection to account for changes required by FCEA.

The average burden per response and the annual burden hours for this new information collection are explained and summarized in the following chart. A burden reduction of 20,397,156.60 hours will be merged with OMB No. 0584–0064 once approved by OMB.

Section of regulation	Title	Form number (if any)	Estimated number of respondents	Report filed annually	Total annual responses (Col. D×E)	Estimated avg. number of manhours per response	Estimated total manhours (Col. F×G)
A	B	C	D	E	F	G	H
REPORTING							
STATE AGENCY LEVEL							
Part 273	Change of Program Name		44	1.00	44.00	8.0000	352.00
273.9(c)	Exclusion of combat-related pay.			0.00	0.00		0.00
273.9(d)(1)(iii)	Increase of minimum standard deduction.			0.00	0.00		0.00
§§ 273.9(d)(4) & 273.10(e)(1)(i)(E).	Elimination of cap on dependent care expenses—SA Operation Manual update.		53	1.00	53.00	8.0000	424.00
Do.	Newly certified households w/ dependent care.		53	7,317.75	387,840.75	0.0835	32,384.70
Do.	Existing households w/dependent care.		53	10,778.26	571,247.78	0.0334	19,079.68
273.10(e)(2)(ii)(C)	Minimum benefit increase		53	1.00	53.00	0.5000	26.50
273.8(b)	Asset indexation		53	16.98	900.00	0.0167	15.03
273.8(e)(2)(i)	Exclusion of retirement accounts from resources.						
Do.	Newly certified households		53	792.45	42,000.01	0.0167	701.40
Do.	New and Existing households		53	138,528.30	7,342,000.01	0.0167	−122,611.40
273.8(e)	Exclusion of education accounts from resources.						
Do.	Newly certified households		53	18.87	1,000.11	0.0167	16.70
Do.	New households (existing households not included, already captured in respondents under retirement accounts provision).		53	8.59	455.01	0.0167	−7.60
§§ 273.12(a)(5), (b), and (c)	Expansion of simplified reporting.						
Do.	Newly added elderly or disabled households.		47	53,000.00	2,491,000.00	0.1837	457,596.70
§ 272.2(d)(1)(H) and 273 Subpart H.	Transitional benefits alternative.			0.00	0.00		0.00
§§ 273.2(b) & (c), 273.12(c) and (d), 273.14(b), and 273.21(h).	Telephonic signature		3	1.00	3.00	120.0000	360.00
§§ 273.2(e)(2) & 273.14(b)(3)	Telephonic interviews		40	1.00	40.00	2.0000	−80.00
273.5(b)(5)	Averaging student work hours		53	13,431.30	711,858.90	0.0835	−59,440.22
§§ 273.7(e)(1)(viii) & 273.7(e)(4)(iii).	Employment and Training: Job retention services.						0.00
State Agency Burden Total			53	223,897.50	11,548,495.56		328,817.49
HOUSEHOLD LEVEL							
Part 273	Change of Program Name			0.00	0.00		0.00
273.9(c)	Exclusion of combat-related pay.			0.00	0.00		0.00
273.9(d)(1)(iii)	Increase of minimum standard deduction.			0.00	0.00		0.00

Section of regulation	Title	Form number (if any)	Estimated number of respondents	Report filed annually	Total annual responses (Col. D×E)	Estimated avg. number of manhours per response	Estimated total manhours (Col. F×G)
A	B	C	D	E	F	G	H
§§ 273.9(d)(4) & 273.10(e)(1)(i)(E).	Elimination of cap on dependent care expenses.						
Do.	Newly certified households w/ dependent care.		387,841	1.00	387,841.00	0.0835	32,384.72
Do.	Existing households w/dependent care.			1.00	571,248.00	0.0334	19,079.68
Do.			571,248				
273.10(e)(2)(ii)(C)	Minimum benefit increase			0.00	0.00		0.00
273.8(b)	Asset indexation			0.00	0.00		0.00
273.8(e)(2)(i)	Exclusion of retirement accounts from resources.						
Do.	New and existing households		7,342,000	1.00	7,342,000.00	0.0167	−122,611.40
273.8(e)	Exclusion of education accounts from resources.						
Do.	New households (existing households not included, already captured in respondents under retirement accounts provision).		455	1.00	455.00	0.0167	−7.60
§§ 273.12(a)(5), (b), and (c)	Expansion of simplified reporting.		2,491,000	1.00	2,491,000.00	0.0835	207,998.50
§ 272.2(d)(1)(H) and 273 Subpart H.	Transitional benefits alternative.			0.00	0.00		0.00
§§ 273.2(b) & (c), 273.12(c) and (d), 273.14 (b) and 273.21(h).	Telephonic signature			0.00	0.00		0.00
§§ 273.2(e)(2) & 273.14(b)(3)	Telephonic interviews		10,431,409	1.00	10,431,409.00	2.0000	−20,862,818.00
273.5(b)(5)	Averaging student work hours			0.00	0.00		0.00
§§ 273.7(e)(1)(viii) & 273.7(e)(4)(iii).	Employment and Training: Job retention services.						0.00
Household burden total			21,223,953	6.00	21,223,953.00		−20,725,974.09
Total Reporting burden of Eligibility, Certification and E&T Proposed Rule.							−20,397,156.6
Total Existing Reporting Burden for OMB No. 0584–0064							24,893,623
Total Reporting Burden for 0584–0064 with Eligibility, Certification and E&T Proposed Rule.							4,496,466
RECORDKEEPING							
STATE AGENCY LEVEL							
No recordkeeping burden incurred as a result of the proposed rule.		0	0	0	0	0	0
HOUSEHOLD LEVEL							
No recordkeeping burden incurred as a result of the proposed rule.		0	0	0	0	0	0

Reporting

1. Renaming the Program—Part 273

As indicated earlier, Section 4001 of the FCEA renamed the Food Stamp Program the Supplemental Nutrition Assistance Program (SNAP). Under the proposed rule, the new program name and other nomenclature changes are updated throughout part 273 of the SNAP regulations. State agencies, however, are not required to change the local program name to the official Federal name under the FCEA and may continue to use state-specific names for SNAP. The Department has, however, encouraged States to discontinue the use of the name Food Stamp Program. If a State agency chooses to adopt the official Federal program name or change from Food Stamps to an alternative name in response to FCEA, it will incur the initial burden costs of updating the State agency Web site and print materials such as operation manuals, program forms, and client information packets.

State agency burden: To date, 27 States have adopted the official program name. A total of 17 States are adopting or have adopted an alternate program name and 9 States are undecided and/or are still using the Food Stamp Program name. For the 44 State agencies that have adopted SNAP or an alternate name for the program, FNS estimates 352 burden hours (44 State agencies × 8 burden hours = 352 total burden hours).

Household burden: No household burden is estimated for this requirement.

2. Exclusion of Combat-Related Pay—§ 273.9(c)

Under the Act, State agencies would be required to exclude combat-related pay from consideration as income in determining SNAP eligibility and benefit amounts. State agencies would require verifiable documentation from households that differentiates regular income from combat-related pay. The process of excluding combat-related pay will create an upfront cost burden for the State, which includes updating operation manuals and staff with the changes of this provision. FNS proposes to add a new paragraph (20) to § 273.9(c)

describing the exclusion requirement of combat-related pay.

State agency burden: The Consolidated Appropriations Act, 2005, Public Law 108–447, allowed State agencies to exclude combat-related pay from consideration as income. Since States have incorporated this requirement in compliance with the Appropriations Act of 2005, which is now codified under the FCEA, FNS does not assume additional burdens to State agencies from this provision. In addition, FNS does not assume additional costs related to verification of combat-related pay since eligibility workers are already obtaining and verifying income on the household's military income.

Household burden: FNS does not estimate an additional burden to the household for this provision since households are already verifying income.

3. Increasing the Standard Deduction for Small Households—§ 273.9(d)(1)(iii)

FNS proposes to amend the regulation at § 273.9(d)(1)(iii) to include the changes in the standard deduction required by the Act. The FCEA required State agencies to implement the new minimum standard deduction approved by this rulemaking for FY 2009 for all 53 State agencies and to index the amounts annually beginning in FY 2010. The increased minimum standard deduction was incorporated as a means to increase the purchasing power of households. This provision would not impose an additional burden on State agencies or households since the standard deduction amounts are already modified and updated on an annual basis. State agencies can adjust the standard deduction to reflect the increased figure as part of the benefit calculation.

State agency burden: No burden estimated for State agencies.

Household burden: No burden estimated for households.

4. Elimination of Dependent Care Caps—§§ 273.9(d)(4) and 273.10(e)(1)(i)(E)

FNS proposes to amend §§ 273.9(d)(4) and 273.10(e)(1)(i)(E) to eliminate the caps on dependent care expenses. The FCEA stipulates that State agencies would no longer cap a household's deduction for dependent care. Working households with children are allowed to deduct the entire amount of child care expenses when determining benefits. Applying this requirement to existing SNAP households does pose an additional burden on State agencies because this requirement would be applied on a case-by-case basis. The burden would result from additional administrative steps required to apply the new provisions.

State agency burden: FNS estimates a burden of 8 hours, totaling 424 burden hours (8 hours × 53 State agencies = 424 burden hours), for State agencies to develop procedures and modify manuals to incorporate the new dependent care requirements. As for applying these provisions toward new households, FNS estimates a State agency burden of 5 minutes or .0835 hours at the initial interview per household and 2 minutes or .0334 hours at recertification per household. According to the National Data Bank Survey (NDB), there are 8,618,690 newly certified households and 12,694,400 existing households in SNAP. Approximately 4.5 percent or 387,841 new households and 571,248 existing households receive dependent care (Characteristics of Food Stamp Households of 2007). Based on this information, FNS estimates a combined burden of 51,465 hours (387,841 newly certified households with dependent care × .0835 hours = 32,385 burden hours; 571,248 existing households with dependent care × .0334 hours = 19,080 burden hours) to implement the requirements under the new dependent care provision.

Household burden: Households may have to provide additional verification of costs greater than $175 to $200 and for additional types of expenses associated with dependent care (*i.e.* transportation and activity fees). FNS estimates that newly certified households will incur an additional burden of 5 minutes or .0835 hours (5 minutes or .0835 hours × 387,841 new households = 32,385 burden hours) to obtain additional verification information and a burden of 2 minutes or .0334 hours (2 minutes or .0334 hours × 571,248 recertified households = 19,080 burden hours) for existing households. The combination of newly certified and existing households results in 51,465 burden hours.

5. Increasing the Minimum Benefit for Small Households—§ 273.10(e)(2)(ii)(C)

FNS proposes to amend § 273.10(e)(2)(ii)(C) to include the FCEA increase in the minimum benefit amount for one and two-person households from $10 to 8 percent of the maximum allotment. State agencies would have a minimum burden associated with implementing this change in the benefit amount, since it will now be adjusted annually rather than being a fixed amount.

State agency burden: FNS estimates a burden of 30 minutes per State agency, totaling 27 burden hours (30 minutes or .5 hr × 53 State agencies = 27 burden hours) for State agencies to incorporate this provision.

Household burden: No burden is estimated for households.

6. Indexing Asset Limits to Inflation—§ 273.8(b)

The FCEA authorized several changes to resource limits. The Act stipulated that the asset limit be indexed to inflation to the nearest $250 increment. This change in the Act allows resource limits to keep pace with rising prices of goods and services. Initially, the changes proposed by the rule will lead to changes in the State agency's system and operational manual. This will be a minimal burden to State agencies. This rulemaking proposes to amend § 273.8(b) by indexing current asset limits to inflation.

State agency burden: FNS estimates an additional burden of 15 hours to State agencies for the implementation of this provision (900 initial certification applications × 1 minute or .0167 hours = 15 burden hours). This burden will not be incurred by State agencies until FY2013 when this provision will be fully implemented.

Household burden: No household burden estimated.

7. Exclusion of Retirement Accounts From Resources §§ 273.8(e)(2)(i) and Education Accounts 273.8(e)

Additionally, FNS is proposing that all funds in tax-preferred retirement accounts and education savings accounts be excluded from countable resources for the purposes of SNAP. State agencies would no longer need to consider retirement accounts and education savings accounts as resources. Because these resources will no longer be considered as part of the SNAP eligibility process, State agencies may see growth in the volume of applications which can lead to a small administrative burden. FNS proposes to revise SNAP regulations at §§ 273.8(e)(2)(i) and 273.8(e) to incorporate these changes.

According to FNS' Office of Research and Analysis, based on Quality Control data, 46 percent of all SNAP households are not categorically eligible and, therefore, are impacted by this provision. Categorically-eligible households are not subjected to the income and asset standard tests, and thus are not affected by the exclusion of retirement and educational savings accounts from the asset tests. Households that are not categorically-

eligible (7,342,000) are affected by this legislation and are able to have those two types of assets excluded. The number of people positively affected would be roughly the same for both groups, except that more people were made eligible by excluding retirement savings then by excluding educational savings. Therefore, existing households were not included in the education resources burden estimate since these households have been captured within the burden estimates for the exclusion of retirement accounts.

State agency burden: Under this provision, a State agency will no longer need to consider retirement accounts and education savings accounts as resources. This will reduce the State's resource verification burden. However, State agencies will need to consider the potential growth in SNAP applications and the potential administrative burden associated with it. FNS estimates a 1 minute burden or .0167 hours associated with additional administrative processes resulting from the exclusion of retirement account resources (*42,000 newly certified households associated with retirement accounts × .0167 hours = 701 burden hours), totaling 701 burden hours. FNS assumes a total of 122,611 (.0167 hours × *7,342,000 newly certified and existing households = 122,611 reduced burden hours) reduced burden hours associated with the FCEA retirement resources provision.

FNS estimates a 1 minute burden or .0167 hours associated with additional administrative processes resulting from the exclusion of education account resources (1,000 newly certified households with education accounts × .0167 hours = 17 burden hours), totaling 17 burden hours. FNS assumes an 8 hour burden reduction (.0167 hours × *455 newly certified households = 8 burden hours) for newly certified households impacted by the exclusion of education resources.

Household burden: Households will no longer need to provide necessary supporting documents for the tax-preferred accounts. FNS estimates a 1 minute or .0167 burden hour reduction since households are no longer required to provide verification of retirement accounts, totaling 122,611 reduced burden hours (.0167 hours × *7,342,000 newly certified and existing households = 122,611 reduced burden hours). FNS estimates a 1 minute or .0167 burden hours reduction since households are no longer required to provide verification of education accounts, totaling a reduction of 8 hours (.0167 hours × *455 newly certified households = 8 burden hours). *Household estimates provided by the Office of Research and Analysis.

8. Expanding Simplified Reporting—§§ 273.12(a)(5), (b), and (c)

The expansion of simplified reporting under the FCEA allows State agencies to place all households on simplified reporting. Elderly, disabled, homeless, migrant and seasonal farm workers are no longer prohibited from periodic reporting. This provision greatly reduces the reporting burden for households and State agencies. FNS proposes to revise §§ 273.12(a)(5), (b), and (c) to reflect that the frequency of periodic reporting for elderly and disabled households without earned income has been limited to one report every twelve months.

State agency burden: Based on information available to FNS, 47 States have expanded simplified reporting beyond earned income households. As indicated by the NDB Participation by State Program data, 12,694,400 existing households may be added to the expanded simplified reporting option. Of these, 2,491,000 are elderly and/or disabled households without earnings (FY2008 Quality Control Data; 8th Edition State Options Report). FNS estimates that with the implementation of this rulemaking, 2,491,000 elderly and/or disabled households may be added to the expanded simplified reporting option. FNS assumes that without simplified reporting these households would otherwise have been subject to change reporting or status reporting. By expanding simplified reporting to all households, elderly and/or disabled households without earnings that submitted 2 reports annually under change reporting can submit 1 annual report under simplified reporting. FNS estimates that a State agency spends 11 minutes or .1837 hours processing each report. Prior to the expansion of simplified reporting to the elderly and/or disabled households without earnings, the total State agency burden was 915,193 hours (2,491,000 elderly and/or disabled households × 2 reports under change reporting = 4,982,000 reports × 11 minutes or .1837 hrs = 915,193 burden hours). Under this rulemaking, the State burden is reduced from 915,193 to 457,597 burden hours (11 minutes or .1837 hours × 2,491,000 reports = 457,597 burden hours).

Household burden: The provision reduces household reporting burden because of the limited number of reports required under simplified reporting. F NS estimates that it takes a household 5 minutes or .0835 hours to complete a change report. By expanding simplified reporting to all households, elderly and/or disabled households without earnings can submit one report, thereby reducing the household burden from 415,997 hours to complete a change report (2,491,000 elderly and/or disabled households × 2 reports under change reporting = 4,982,000 reports × 5 minutes or .0835 hrs = 415,997 burden hours) to 207,999 burden hours under simplified reporting (2,491,000 elderly and/or disabled households × 1 report = 2,491,000 reports × 5 minutes or .0835 = 207,999 burden hours).

9. Expanding Transitional Benefits—§ 272.2(d)(1)(H) and 273 Subpart H

FCEA provides State agencies the option to offer transitional benefits to households with children that cease to receive cash assistance from state-funded public assistance programs. To begin the process of transitional benefits, State agencies should provide the household with a notice of expiration (NOE) and a transition notice (TN). It is assumed that the burden for the TN would be minimal since the TN can sometimes replace the NOE. FNS proposes a revision of State plan requirements at § 272.2(d)(1)(H) and subpart H in part 273 of the SNAP regulations to reflect this option. In addition, this provision requires a revision to the State plan which is incorporated in the new information collection burden entitled, "Operating Guidelines, Forms, and Waivers."

State agency burden: Current regulations require that States that offer transitional benefits provide households leaving cash assistance programs with a TN. If no transitional benefit is offered, State agencies would provide households with a NOE prior to the end of the certification period or a Notice of Adverse Action. Since State agencies would automatically generate a notice, regardless of the type of notice, FNS does not estimate an additional burden for State agencies.

Household burden: Upon exiting a cash assistance program, the SNAP household's benefits are recalculated to account for the reduction in income. Therefore, no additional information is collected or required from the household. No additional burden to the household is estimated if transitional benefits are received or not.

10. Telephonic Signatures—§§ 273.2(b) & (c), 273.12(c) & (d), 273.14(b), and 273.21(h)

The Act allows State agencies to establish a system by which an applicant may sign an application through recorded verbal assent over the telephone. FNS proposes several changes to incorporate this option:

• State clearly that a State agency may accept a spoken signature;
• Implement restrictions on spoken signatures;
• Apply restrictions to other signatures, written as well as unwritten; and
• Allow gestured or visual signatures as alternatives for those individuals that are unable to provide verbal assent.

Since the telephonic signature process would be a component of the application process, periodic reporting process, and recertification process, it is estimated that the State agency will incur an upfront cost burden of 120 hours to implement system changes and train staff on system usage. FNS proposes to revise §§ 273.2(b) & (c), 273.12(c) & (d), 273.14(b), and 273.21(h) to specify conditions under which a household may attest to the accuracy of a SNAP application or periodic report.

State agency burden: SNAP current policy allows State agencies to continue to explore and to adopt technologies as a way to improve their service to households and to simplify their management of SNAP. State agencies that may want to incorporate a system that supports the recording of telephonic signatures may need to phase such a system into place over a long period of time. Based on this, FNS assumes that in each fiscal year, over the next 3 years, three State agencies will work toward incorporating a system that supports the capabilities required under this provision. FNS estimates an upfront cost burden of 120 hours per State agency over the course of 3 years. This results in a total of 360 burden hours for three State agencies in the first 3 years.

Household burden: While this rulemaking should improve access for clients, the application process remains the same. Therefore, FNS does not assume a burden for households.

FNS Proposed State Options: This rule also proposes two changes to the program certification and eligibility regulations to offer State options that are currently available only through waivers—telephone interviews at certification and recertification, and averaging student work hours. The reporting burdens for these proposed options are discussed below.

11. Telephone Interviews—§§ 273.2(e)(2) and 273.14(b)(3)

FNS proposes to amend §§ 273.2(e)(2) and 273.14(b)(3) to allow states to use a telephone interview rather than a face-to-face interview without documenting hardship. State agencies would be required to conduct a face-to-face interview if requested by the household or if the State agency determines one is necessary. Currently, 40 states are conducting telephone interviews under a face-to-face waiver. Per this provision, State agencies will no longer be required to collect data on information based on the type of interview that households received, nor will they be required to document household hardship. The result is a reduction in state burden hours due to simplification of the certification and recertification process.

State agency burden: Since a large number of States have incorporated telephone interviews through the waiver process, FNS assumes that the implementation of this provision will result in a reduction in administrative burden to State agencies due to no longer requiring the approval of waivers for telephonic interviews. FNS estimates a 2 hour reduction in burden hours for State agencies, totaling 80 reduced burden hours (2 hours × 40 States with active face-to-face waivers = 80 reduced burden hours).

Household burden: This proposed provision permits households to fulfill the interview requirement without the need to visit the local SNAP office, reducing transportation costs and potential loss of wages for households. Assuming that 80% of households within States that have approved face-to-face waivers are having telephone interviews, FNS estimates a 2 hour reduction in household burden, totaling 20,862,818 reduced burden hours (13,039,262 households under approved waiver × 80% = 10,431,409 households × 2 hours = 20,862,818 reduced burden hours).

12. Averaging Student Work Hours—§ 273.5(b)(5)

FNS also proposes to amend § 273.5(b)(5) to give States the option to determine compliance of the 20-hour minimum work requirement by averaging the number of student hours worked over a month using a 80-hour monthly minimum. Modification of the existing regulation grants States the additional administrative flexibility and reduced burden associated with determining compliance with minimum weekly work standards.

State agency burden: Based on limited waiver data, FNS estimates that 3.34 percent of a State agency's caseload is composed eligible student households. Based on this assumption, the modification of § 273.5(b)(5) would decrease the State agency burden hours by 5 minutes or .0835 hours, totaling 59,440 reduced burden hours annually (21,313,090 newly certified and existing households × 3.34% = 711,857 eligible student households × .0835 hours = 59,440 reduced burden hours).

Household burden: Student households must continue to provide documentation to support the number of hours worked. Therefore, no additional burden is estimated under this provision for the household.

13. E&T Job Retention Services—§§ 273.7(e)(1)(viii) & 273.7(e)(4)(iii)

FCEA amended section 6(d)(4) of the Act to incorporate a new employment and training component. The provision permits the use of education and training funds for post-employment job retention services for up to 90 days. It clarifies that any individual voluntarily electing to participate in an E&T program is not subject to the 120 hour work limit. FNS proposes to amend §§ 273.7(e)(1) (viii) and 273.7(e)(4)(iii) of the SNAP regulations to define job retention as services provided to individuals who have secured employment to help achieve satisfactory performance, keep the job and increase earnings over time.

State agency burden: No burden is estimated under this provision for State agencies.

Household burden: No burden is estimated under this provision for households.

Recordkeeping

Maintaining case records: Section 4119 of the FCEA amended Section 11(e)(2)(C) of the Act (7 U.S.C. 2020(e)(2)(C)) to allow State agencies to establish a system by which an applicant may sign an application through recorded verbal assent over the telephone. The system must record the verbal assent, include effective safeguards against impersonation, identity theft and invasions of privacy, not interfere with the right to apply in writing, provide the household a written copy of the application with instructions for correcting any errors, and make the date of application the date of the verbal assent. State agencies are to implement changes to their telephone system for the efficient collection, storage, and protection of large amounts of data to meet the requirements under Section 11(a) of the Act (7 U.S.C. 2020(a)) and § 271.4(a)(6) of the SNAP regulations concerning record maintenance.

State agencies that incorporate a system that records verbal assent would be required to keep record of the information gathered and submitted to FNS. We do not foresee an additional record keeping burden resulting from the maintenance of recorded verbal data since the information that is recorded is

the same as the information collected with paper applications. Therefore, the recordkeeping burden remains unchanged under this information collection.

OMB Number: 0584—NEW

Title: Operating Guidelines, Forms, and Waivers.

Forms: Not Applicable.

Type of Request: New.

Abstract: The regulations at § 272.2 require that State agencies plan and budget program operations and establish objectives for each year. State agencies are required to submit program activity statements and State plan of operation updates to FNS Regional Offices for review and approval. The FCEA provided that the employment and training provision and optional provisions, included in this proposed rule, may be implemented by State agencies on October 1, 2008.

The average burden per response and the annual burden hours for this new information collection are explained and summarized below. A total of 34 burden hours will be merged with OMB No. 0584–0083 once approved by OMB.

Section of regulation	Title	Form number (if any)	Estimated number of respondents	Report filed annually	Total annual responses (Col. DxE)	Estimated avg. no. of man-hours per response	Estimated total man-hours (Col. FxG)
A	B	C	D	E	F	G	H
REPORTING							
STATE AGENCY LEVEL							
§ 273.7(d)(3)(ix)	Shortening the E&T funding cycle.						0.000
§ 272.2(d)	Simplified Reporting		47	1	47	.25	11.75
	Transitional Benefits		19	1	19	.25	4.75
	E&T for Job Retention		12	1	12	.25	3
	Telephonic Signature		3	1	3	.25	.75
	Telephonic Interviews		40	1	40	.25	10
	Averaging of Student work hrs		15	1	15	.25	3.75
State Agency Level Totals			47	6	136		34
RECORDKEEPING							
STATE AGENCY LEVEL							
No recordkeeping burden incurred as a result of the proposed rule.							

Reporting

1. Shortening the E&T Funding Cycle—§ 273.7(d)(3)(ix)

Section 4122 of the FCEA, which amended section 16(h)(1)(A) of Act (7 U.S.C. 2025(h)(1)(A)), limits the timeframe States can keep unspent unmatched Federal funding for E&T purposes and limited the timeframe of availability of unspent unobligated funds to 15 months. FNS proposes to reallocate the unexpended funds to other state agencies as practicable. State agencies are required to provide FNS with a report of changes to the E&T plan as they occur. FNS proposes to revise § 273.7(d)(3)(ix) of the regulations to incorporate this change.

State agency burden: FNS does not estimate a burden to State agencies.

2. Describing State Options in State Plan of Operation—§ 272.2(d)

Additionally, FNS proposes to amend § 272.2(d) of the SNAP regulations in order for State agencies that opt to implement certain provisions of the FCEA, to include such options in the State Plan of Operation.

The optional provisions are: Simplified reporting; transitional benefits; employment and training funding of job retention services; telephonic signature systems; telephonic interviews at certification and recertification; and averaging student work hours. The regulations at § 272.2(f) require that State agencies provide FNS with changes to these plans as they occur. Since these options are newly provided by FCEA, State agencies that choose these options must include them in their State Plans of Operation the year the options are implemented. Additionally, if there are changes to the options in subsequent years, State agencies must update their State Plans of Operation to reflect the changes.

Estimates of burden: 47 States have expanded simplified reporting; 19 States have adopted transitional benefits; 12 States have opted to use employment and training funding for job retention services; 3 States are expected to adopt the telephonic signature systems in the next year; 40 States have approved waivers for telephonic interviews; 15 States have adopted averaging student work hours.

FNS estimates an average burden of 15 minutes or .25 hours per State agency per option selected, totaling 34 burden hours (47 simplified reporting States × .25 hours = 11.75; 19 transitional benefit States × .25 = 4.75; 12 States have incorporated E &T training funding for job retention services × .25 hours = 3; 3 telephonic signature States per year × .25 = .75; 40 telephonic interview States × .25 = 10; 15 States that average student work hours × .25 = 3.75) for the year.

Recordkeeping

No recordkeeping burden was incurred under this proposed rule.

E-Government Act Compliance

FNS is committed to complying with the E–Government Act, 2002 to promote the use of the Internet and other information technologies to provide increased opportunities for citizen access to Government information and services, and for other purposes.

List of Subjects

7 CFR Part 271

Food stamps, Grant programs-social programs. Reporting and recordkeeping requirements.

7 CFR Part 272

Alaska, Civil rights, Food stamps, Grant programs-social programs, Penalties, Reporting and recordkeeping requirements, Unemployment compensation, Wages.

7 CFR Part 273

Administrative practice and procedure, Aliens, Claims, Employment, Food stamps, Fraud, Government employees, Grant programs-social programs, Income taxes, Reporting and recordkeeping requirements, Students, Supplemental Security Income, Wages.

Accordingly, 7 CFR parts 271, 272 and 273 are proposed to be amended as follows:

1. The authority citation for parts 271, 272 and 273 continues to read as follows:

Authority: 7 U.S.C. 2011–2036.

PART 271—GENERAL INFORMATION AND DEFINITIONS

2. In § 271.2, revise the definition of *Minimum benefit* to read as follows:

§ 271.2 Definitions.

* * * * *

Minimum benefit means the minimum monthly amount of SNAP benefits that one- and two-person households receive. The amount of the minimum benefit shall be determined according to the provisions of § 273.10 of this chapter.

* * * * *

PART 272—REQUIREMENTS FOR PARTICIPATING STATE AGENCIES

3. In § 272.2, revise paragraphs (d)(1)(xvi)(A) through (H) to read as follows:

§ 272.2 Plan of operation.

* * * * *

(d) * * *

(1) * * *

(xvi) * * *

(A) Section 273.2(c)(7)(viii) of this chapter, it must include in the Plan's attachment the option to accept spoken signatures on the application and reapplication forms;

(B) Sections 273.2(e)(2) and 273.14(b)(3) of this chapter, it must include in the Plan's attachment the option to provide telephone interviews in lieu of face-to-face interviews at initial application and reapplication;

(C) Sections 273.2(f)(1)(xii), 273.2(f)(8)(i)(A), 273.9(d)(5), and 273.9(d)(6)(i) of this chapter, it must include in the Plan's attachment the options it has selected;

(D) Section 273.5(b)(5) of this chapter, it must include in the Plan's attachment the option to average student work hours;

(E) Section 273.9(c)(3) of this chapter, it must include in the Plan's attachment a statement that the option has been selected and a description of the types of educational assistance being excluded under the provision;

(F) Sections 273.9(c)(18) and 273.9(c)(19) of this chapter, it must include in the Plan's attachment a statement of the options selected and a description of the types of payments or the types of income being excluded under the provisions;

(G) Sections 273.12(b), 273.12(c), and 273.12(d) of this chapter, it must include in the Plan's attachment a statement of the household reporting system or systems has/have been selected and a description of any options available under each reporting system it has selected and the types of households assigned to each reporting system used by the State agency; and

(H) Section 273.26 of this chapter, it must include in the Plan's attachment a statement that transitional SNAP benefits are available and a description of the eligible programs by which households may qualify for transitional benefits; if one of the eligible programs includes a State-funded cash assistance program, whether household participation in that program runs concurrently or sequentially to TANF; the categories of households eligible for such benefits; the maximum number of months for which transitional benefits will be provided; and any other items required to be included under subpart H of part 273 of this chapter.

* * * * *

§ 272.3 [Amended]

4. In § 272.3, remove paragraph (c)(5) and redesignate paragraphs (c)(6) and (c)(7) as paragraphs (c)(5) and (c)(6), respectively.

PART 273—CERTIFICATION OF ELIGIBLE HOUSEHOLDS

5. Part 273 of this chapter is proposed to be amended as follows:

a. Remove the words "the Food Stamp Program" and add in their place, the word "SNAP" each time they appear in this part;

b. Remove the words "Food Stamp Program" and add in their place, the word "SNAP" each time they appear in this part;

c. Remove the words "Food Stamp Act" and "Food Stamp Act of 1977" and add in their place, the words "Food and Nutrition Act of 2008" each time they appear in this part;

d. Remove the words "food stamp" and add in their place, the word "SNAP" each time it appears in this part; and

e. Remove the words "food stamps" wherever they appear and add in their place, the words "SNAP benefits".

6. In § 273.2:

a. Add new paragraph (b)(1)(x);

b. Revise paragraphs (c)(1) and (c)(3);

c. Add new paragraph (c)(7);

d. Revise paragraph (e)(2);

e. Revise the first and last sentences of paragraph (i)(3)(i);

f. Revise paragraph (i)(3)(ii);

g. Revise the last sentence of paragraph (k)(1)(i)(O);

h. Amend the first sentence of paragraph (n)(4)(i)(C) by removing the word "coupons" and replacing it with the word "benefits"; and

i. Amend paragraph (n)(4)(iii) by removing the words "authorization documents or coupons" and replacing them with the words "EBT accounts".

The additions and revisions read as follows:

§ 273.2 Office operations and application processing.

* * * * *

(b) * * *

(1) * * *

(x) A State agency may consider an application form to be an on-line document, a recorded spoken conversation, or a recorded signed conversation. If a State agency uses a non-paper application form, the State agency shall provide the household with a paper copy of the form that complies with paragraphs (b)(1)(i) through (b)(1)(ix) of this section.

* * * * *

(c) * * *

(1) *Household's right to file.* (i) *Where to file.* Households must file SNAP applications by submitting the forms to the SNAP office either in person, through an authorized representative, by fax or other electronic transmission, by mail, or by completing an on-line electronic application.

(ii) *Right to file in writing.* All households have the right to apply or to re-apply for SNAP in writing. The State agency shall neither deny nor interfere with a household's right to apply or to re-apply in writing.

(iii) *Right to same-day filing.* Each household has the right to file an application form on the same day it contacts the SNAP office during office hours. The household shall be advised that it does not have to be interviewed before filing the application and may file an incomplete application form as long as the form contains the applicant's name and address, and is signed by a responsible member of the household or the household's authorized representative. Regardless of the type of system the State agency uses (paper or electronic), the State agency must provide a means for applicants to immediately begin the application process with name, address and signature.

(iv) *Recording the filing date.* State agencies shall document the date the application was filed by recording on the application the date it was received by the SNAP office. When a resident of an institution is jointly applying for SSI and SNAP benefits prior to leaving the institution, the filing date of the application to be recorded by the State agency on the SNAP application is the date of release of the applicant from the institution.

(v) *Non-paper applications.* These provisions apply when a household completes any application, other than a paper application.

(A) *Opportunity to review information.* The State agency shall give the household at least 10 days to review the information that has been recorded electronically and must provide it with a copy of that information for its records.

(B) *A copy.* The State agency shall give the household a copy of the submitted or recorded information for their records.

(vi) *Date of application.* State agencies must document the date the application was filed by recording the date of receipt at the SNAP office.

(vii) *Residents of institutions.* The following special provisions apply to residents of institutions.

(A) *Filing date.* When a resident of an institution is jointly applying for SSI and SNAP benefits prior to leaving the institution, the filing date of the application that the State agency must record is the date of release of the applicant from the institution.

(B) *Processing deadline.* The length of time a State agency has to deliver benefits is calculated from the date the application is filed in the SNAP office designated by the State agency to accept the household's application, except when a resident of a public institution is jointly applying for SSI and SNAP benefits prior to his/her release from an institution in accordance with § 273.1(e)(2).

(C) *Certification procedures.* Residents of public institutions who apply for SNAP prior to their release from the institution shall be certified in accordance with § 273.2(g)(1) or § 273.2(i)(3)(i), as appropriate.

* * * * *

(3) *Availability of the application form.* (i) *General availability.* The State agency shall make application forms readily accessible to potentially eligible households. The State agency shall also provide an application form to anyone who requests the form. Regardless of the type of system the State agency uses (paper or electronic), the State agency must provide a means for applicants to immediately begin the application process with name, address and signature. If the State agency maintains a Web page, it must make the application available on the Web page in each language in which the State agency makes a printed application available. The State agency must provide on the Web page the addresses and phone numbers of all State SNAP offices and a statement that the household should return the application form to its nearest local office. The applications must be accessible to persons with disabilities in accordance with Section 504 of the Rehabilitation Act of 1973, Public Law 93–112, as amended by the Rehabilitation Act Amendments of 1974, Public Law 93–516, 29 U.S.C. 794.

(ii) *Paper forms.* The State agency must make paper application forms readily accessible and available even if the State agency also accepts application forms electronically or through other media.

* * * * *

(7) *Signing an application or reapplication form.* In this paragraph, the word "form" refers to applications and reapplications.

(i) *Requirement for a signature.* An application must be signed to establish a filing date and to determine the State agency's deadline for acting on the application. The State agency shall not certify a household without a signed form.

(ii) *Right to provide written signature.* All households have the right to sign a SNAP form in writing.

(iii) *Unwritten signatures.* The State agency shall decide whether unwritten signatures are acceptable. The State agency is not required to accept unwritten signatures.

(A) These may include electronic signature techniques, handwritten signatures that the household transmits by fax or other electronic transmission, recorded spoken signatures, or recorded gestured signatures.

(B) A State agency is not required to obtain a written signature in addition to an unwritten signature.

(iv) *Who may sign the form.* (A) An adult member of the household. The State agency decides who is an adult.

(B) An authorized representative, as described in § 273.2(n)(1).

(v) *Criteria for all signatures.* All systems for signatures must meet all of the following criteria:

(A) Record for future reference the assent of the household member and the information to which assent was given;

(B) Include effective safeguards against impersonation, identity theft, and invasions of privacy;

(C) Not deny or interfere with the right of the household to apply in writing;

(D) Promptly provide to the household member a written copy of the completed application, with instructions for a simple procedure for correcting any errors or omissions (except that this requirement does not apply to an application that a household signs by hand);

(E) Comply with the SNAP regulations regarding bilingual requirements at § 272.4(b) of this chapter; and

(F) Satisfy all requirements for a signature on an application under the Act and other laws applicable to SNAP, with the date on which the household member provides verbal assent considered as the date of application for all purposes.

(vi) *Handwritten signatures.* These provisions apply specifically to handwritten signatures.

(A) If the signatory cannot sign with a name, an X is a valid signature.

(B) The State agency may require a witness to attest to an X.

(C) An employee of the State agency may serve as a witness.

(vii) *Electronic signatures.* These provisions apply specifically to electronic signatures.

(A) The State agency may accept an electronic signature but is not required to do so.

(B) Some examples of electronic signature are the use of a Personal Identification Number (PIN), a computer password, clicking on an "I accept these conditions" button on a computer screen, and clicking on a "Submit" button on a computer screen.

(C) The State agency shall promptly provide to the household member a written copy of the completed application, with instructions for a simple procedure for correcting any errors or omissions.

(D) The State agency's procedure shall allow the household at least 10 calendar days to return corrections; and

(E) The State agency shall regard the date of the signature as the date of application for all purposes.

(viii) *Spoken signatures.* These provisions apply specifically to spoken signatures.

(A) The State agency may accept a spoken signature but is not required to do so. A State agency that chooses to accept spoken signatures under this paragraph (c)(7)(viii) must specify in its State plan of operation that it has selected this option.

(B) An example of a spoken signature is saying "Yes" or "No", "I agree" or "I do not agree", or otherwise clearly indicating assent or agreement during an interview over the telephone.

(C) The State agency shall promptly provide to the household member a written copy of the completed application, with instructions for a simple procedure for correcting any errors or omissions.

(D) The State agency's procedure shall allow the household at least 10 calendar days to return corrections;

(E) The State agency shall regard the date of the signature as the date of application for all purposes.

(ix) *Gestured signatures.* These provisions apply specifically to gestured signatures.

(A) The State agency may accept a gestured signature but is not required to do so.

(B) Gestured signatures include the use of signs and expressions to communicate "Yes" or "I agree" in American Sign Language (ASL), Manually Coded English (MCE) or another similar language or method during an interview, in person or over a video link.

(C) The State agency shall promptly provide to the household member a written copy of the completed application, with instructions for a simple procedure for correcting any errors or omissions.

(D) The State agency's procedure shall allow the household at least 10 calendar days to return corrections.

(E) The State agency shall regard the date of the signature as the date of application for all purposes.

* * * * *

(e) * * *

(2) The State agency may waive the face-to-face interview required in paragraph (e)(1) of this section in favor of a telephone interview on a case-by-case basis because of household hardship situations as determined by the State agency; for specified categories of households; or for all applicant households. However, the State agency must grant a face-to-face interview to any household that requests one. The State agency has the option of conducting a telephone interview or a home visit that is scheduled in advance with the household if the office interview is waived. A State agency that chooses to interview households by telephone in lieu of the face-to-face interview must specify this choice in its State plan of operation and describe the types of households that will be routinely offered a telephone interview in lieu of a face-to-face interview.

* * * * *

(i) * * *

(3) * * *

(i) * * * For households entitled to expedited service, the State agency shall post benefits to the household's EBT card and make them available to the household not later than the 7th calendar day following the date an application was filed. * * * Whatever systems a State agency uses to ensure meeting this delivery standard shall be designed to allow a reasonable opportunity for providing the household with an EBT card and PIN no later than the 7th calendar day following the day the application was filed.

(ii) *Drug addicts and alcoholics, group living arrangement facitilies.* For residents of drug addiction or alcoholic treatment and rehabilitation centers and residents of group living arrangements who are entitled to expedited service, the State agency shall make benefits available to the recipient not later than the 7 calendar days following the date an application was filed.

* * * * *

(k) * * *

(1) * * *

(i) * * *

(O) * * * It shall also include the client's rights and responsibilities (including fair hearings, authorized representatives, out-of-office interviews, reporting changes and timely reapplication), information on how and where to obtain an EBT card and PIN and how to use an EBT card and PIN (including the commodities clients may purchase with SNAP benefits.

* * * * *

7. In § 273.5, revise paragraph (b)(5) to read as follows:

§ 273.5 Students.

* * * * *

(b) * * *

(5) Be employed for a minimum of 20 hours per week; and be paid for such employment or, if self-employed, be employed for a minimum of 20 hours per week and receiving weekly earnings at least equal to the Federal minimum wage multiplied by 20 hours. The State agency may determine compliance with this requirement by averaging the number of hours worked per week based on employment of a minimum of 80 hours per month. A State agency that chooses to average student work hours must specify this choice in its State plan of operation.

* * * * *

8. In § 273.7:

a. Amend paragraph (d)(3)(ix) by removing the first sentence;

b. Add new paragraph (e)(1)(viii);

c. Revise paragraph (e)(4)(iii);

e. Amend introductory paragraph (k) by removing the words "SNAP coupon" and adding in their place the words "SNAP benefit";

f. Amend paragraph (k)(4) by removing the words "SNAP coupon" and adding in their place the words "SNAP benefit";

g. Amend paragraph (k)(6) by removing the words "SNAP coupon" and adding in their place the words "SNAP benefit";

h. Amend paragraph (m)(1) by removing the word "coupon" and adding in its place the word "benefit"; and

i. Amend paragraph (m)(5)(ii) by removing the word "coupon" and adding in its place the word "benefit".

The addition and revision read as follows:

§ 273.7 Work provisions.

* * * * *

(e) * * *

(1) * * *

(viii) Job retention services that are designed to help achieve satisfactory performance, retain employment and to increase earnings over time. The State agency may offer job retention services for up to 90 days to an individual who has secured employment. The State agency may provide job retention services to households leaving SNAP up to the 90-day limit. The participant must have secured employment after receiving other employment/training services under the E&T program offered by the State agency. An otherwise eligible individual who refuses or fails to accept job retention services offered by the State agency may not be disqualified as specified in paragraph (f)(2) of this section.

* * * * *

(4) * * *

(iii) Voluntary participants are not subject to the limitations specified in paragraph (e)(3) of this section.

* * * * *

9. In § 273.8:

a. Revise paragraphs (b), (c)(1), and (e)(2); and

b. Add a new paragraph (e)(20).

The revisions and addition read as follows:

§ 273.8 Resource eligibility standards.

* * * * *

(b) *Maximum allowable financial resources.* The maximum allowable liquid and non-liquid financial resources of all members of a household without elderly or disabled members shall not exceed $2,000, as adjusted for inflation in accordance with paragraph (b)(1) of this section. For households including one or more disabled or

elderly members or one or more members over age 60, such financial resources shall not exceed $3,000, as adjusted for inflation in accordance with paragraph (b)(2) of this section.

(1) Beginning October 1, 2008, and each October 1 thereafter, the maximum allowable financial resources shall be adjusted and rounded down to the nearest $250 to reflect changes in the Consumer Price Index for the All Urban Consumers published by the Bureau of Labor Statistics of the Department of Labor (for the 12-month period ending the preceding June).

(2) Each adjustment shall be based on the unrounded amount for the prior 12-month period.

(c) * * *

(1) Liquid resources, such as cash on hand, money in checking and savings accounts, saving certificates, stocks or bonds, and lump sum payments as specified in § 273.9(c)(8); and

* * * * *

(e) * * *

(2) Household goods, personal effects, the cash value of life insurance policies, one burial plot per household member, and the value of one bona fide funeral agreement per household member, provided that the agreement does not exceed $1,500 in equity value, in which event the value above $1,500 is counted. The cash value of pension plans or funds shall be excluded. The following retirement accounts shall be excluded:

(i) Funds in a plan, contract, or account that meet the following sections of the Internal Revenue Code of 1986:

(A) Section 401(a), which includes funds commonly known as "tax qualified plans" or "401(k) plans";

(B) Section 403(a), which includes funds that are similar to 401(a) but are funded through annuity insurance;

(C) Section 403(b), which includes retirement plans for some employees of public schools and tax exempt organizations;

(D) Section 408, which includes traditional Individual Retirement Accounts and Annuities (IRAs);

(E) Section 408A plans, which include plans commonly known as Roth IRAs;

(F) Section 457(b); and

(G) Section 501(c)(18).

(ii) Funds in a Federal Thrift Savings Plan as defined by 5 U.S.C. 83.

(iii) Any other retirement plan that is designated tax-exempt under a similar provision of the Internal Revenue Code of 1986.

(iv) FNS reserves the right to exclude other retirement accounts from financial resources and will provide notification of these provisions through policy memoranda.

* * * * *

(20) The following education accounts are excluded from allowable financial resources:

(i) Funds in a qualified tuition program, as defined by section 529 of the Internal Revenue Code of 1986; and

(ii) Coverdell education savings accounts, as defined by section 530 of the Internal Revenue Code of 1986.

(iii) FNS reserves the right to exclude other education programs, contracts, or accounts from financial resources and will provide notification of these provisions through policy memoranda.

* * * * *

10. In § 273.9:

a. Amend paragraph (a)(4) by removing the Web site "*www.fns.usda.gov/fsp*" and replacing them with the Web site "*www.fns.usda.gov/snap*"

b. Amend the second sentence of paragraph (b)(1)(iii) by removing the words in the second sentence "Job Training Partnership Act" and replacing them with the words "Workforce Investment Act of 1998";

c. Amend the first sentence of paragraph (b)(1)(v) by removing the words "section 204(b)(1)(C) or section 264(c)(1)(A)" and replacing them with the words "title 1 of the Workforce Investment Act of 1998";

d. Amend paragraph (c)(10)(v) by removing the words "Job Training Partnership Act (Pub. L. 90–300)" and replacing them with the words "Workforce Investment Act of 1998";

e. Add new paragraph (c)(20);

f. Revise paragraphs (d)(1)(iii);

g. Amend the second sentence of paragraph (d)(3)(x), by removing the word "coupon" and replacing it with the word "benefit"; and

h. Revise paragraph (d)(4).

The addition and revisions read as follows:

§ 273.9 Income and deductions.

* * * * *

(c) * * *

(20) Income received by a member of the United States Armed Forces under 37 U.S.C., Chapter 5 or otherwise designated by the Secretary as excludable that is:

(i) Received in addition to the service member's basic pay;

(ii) Received as a result of the service member's deployment to or service in an area designated as a combat zone as determined pursuant to Executive Order or Public Law; and

(iii) Not received by the service member prior to the service member's deployment to or service in a Federally-designated combat zone.

(d) * * *

(1) * * *

(iii) *Minimum deduction levels.* Notwithstanding paragraphs (d)(1)(i) and (d)(1)(ii) of this section, the standard deduction for FY 2009 for each household in the 48 States and the District of Columbia, Alaska, Hawaii, Guam, and the Virgin Islands shall not be less than $144, $246, $203, $289, and $127, respectively. Beginning FY 2010 and each fiscal year thereafter, the amount of the minimum standard deduction is equal to the unrounded amount from the previous fiscal year adjusted to the nearest lower dollar increment to reflect changes for the 12-month period ending on the preceding June 30 in the Consumer Price Index for All Urban Consumers published by the Bureau of Labor Statistics of the Department of Labor, for items other than food.

* * * * *

(4) *Dependent Care.* Payments for dependent care when necessary for a household member to accept or continue employment, comply with the employment and training requirements as specified under § 273.7(e), or attend training or pursue education that is preparatory to employment, except as provided in § 273.10(d)(1)(i). Costs that may be deducted are limited to the care of a household member who requires dependent care, including care of a child through the age of 15 or an incapacitated person of any age in need of dependent care. Dependent care expenses must be separately identified, necessary to participate in the care arrangement, and not already paid by another source on behalf of the household. Allowable dependent care costs include:

(i) The costs of care given by an individual care provider or care facility;

(ii) Transportation costs to and from the care facility; and

(iii) Activity fees associated with the care provided to the dependent that are necessary for the household to participate in or maintain the care.

* * * * *

11. In § 273.10:

a. Amend paragraph (e)(1)(i)(E) by removing the words "up to a maximum amount";

b. Revise paragraph (e)(2)(ii)(C); and

c. Amend paragraph (e)(2)(vi) by replacing the word "housholds" with the word "households".

The revision read as follows:

§ 273.10 Determining household eligibility and benefit levels.

* * * * *

(e) * * *

(2) * * *

(ii) * * *

(C) Except during an initial month, all eligible one-and two-person households shall receive minimum monthly allotments equal to the minimum benefit. The minimum benefit is 8 percent of the maximum allotment for a household of one, rounded to the nearest whole dollar.

* * * * *

12. In § 273.11:

a. Remove paragraph (e)(2)(iii) and redesignate paragraph (e)(2)(iv) as paragraph (e)(2)(iii);

b. Redesignate paragraphs (e)(5), (e)(6), and (e)(7) as paragraphs (e)(6), (e)(7), and (e)(8);

c. Add a new paragraph (e)(5);

d. Revise newly redesignated paragraph (e)(6);

e. Revise the last sentence of newly redesignated paragraph (e)(7);

f. Revise the second and fourth sentences of newly redesignated paragraph (e)(8);

g. Remove the last sentence of paragraph (f)(4);

h. Revise paragraph (f)(5);

i. Redesignate paragraphs (f)(6) and (f)(7) as paragraphs (f)(7) and (f)(8);

j. Add a new paragraph (f)(6);

k. Revise the first sentence of newly redesignated (f)(7); and

l. Revise the first sentence of newly redesignated (f)(8).

The additions and revisions read as follows:

§ 273.11 Action on households with special circumstances.

* * * * *

(e) * * *

(5) DAA centers may redeem benefits in various ways depending on the State's EBT system design. The designs may include DAA use of individual household EBT cards at authorized stores, authorization of DAA centers as retailers with EBT access via POS at the center, DAA use of a center EBT card that is an aggregate of individual household benefits, and other designs. Regardless of the process elected, the State must ensure that the EBT design or DAA procedures prohibit the DAA from obtaining more than one-half of the household's allotment prior to the 16th of the month or permit the return of benefits to the household's EBT account through a refund, transfer, or other means. Guidelines for approval of EBT systems are contained in part 274 of this chapter.

(6) When a household leaves the center, the center must perform the following:

(i) *Notify the State agency.* If possible, the center must provide the household with a change report form to report to the State agency the household's new address and other circumstances after leaving the center and must advise the household to return the form to the appropriate office of the State agency within 10 days. After the household leaves the center, the center can no longer act as the household's authorized representative for certification purposes or for obtaining or using benefits.

(ii) Provide the household with its EBT card if it was in the possession of the center. The center must return to the State agency any EBT card not provided to departing residents by the end of each month.

(iii) If no benefits have been spent on behalf of the individual household, the center must return the full value of any benefits already debited from the household's current monthly allotment back into the household's EBT account at the time the household leaves the center.

(iv) If the benefits have already been debited from the EBT account and any portion spent on behalf of the household, the following procedures must be followed.

(A) If the household leaves prior to the 16th day of the month, the center must ensure that the household has one-half of its monthly benefit allotment remaining in its EBT account unless the State agency issues semi-monthly allotments and the second half has not been posted yet.

(B) If the household leaves on or after the 16th day of the month, the State agency, at its option, may require the center to give the household a portion of its allotment. If the center is authorized as a retailer, the State agency may require the center to provide a refund for that amount back to the household's EBT account at the time that the household leaves the center. Under an EBT system where the center has an aggregate EBT card, the State agency may, but is not required to, transfer apportion of the household's monthly allotment from a center's EBT account back to the household's EBT account. In either case, the household, not the center, must be allowed to have sole access to any benefits remaining in the household's EBT account at the time the household leaves the center.

(v) If the household has already left the center, and as a result, the center is unable to return the benefits in accordance with this paragraph, the center must advise the State agency, and the State agency must effect the return instead. These procedures are applicable at any time during the month.

(7) * * * The organization or institution shall be strictly liable for all losses or misuse of benefits and/or EBT cards held on behalf of resident households and for all overissuances which occur while the households are residents of the treatment center.

(8) * * * The State agency shall promptly notify FNS when it has reason to believe that an organization or institution is misusing benefits and/or EBT cards in its possession. * * * The State agency shall establish a claim for overissuances of benefits held on behalf of resident clients as stipulated in paragraph (e)(7) of this section if any overissuances are discovered during an investigation or hearing procedure for redemption violations. * * *

* * * * *

(f) * * *

(5) When the household leaves the facility, the GLA, either acting as an authorized representative or retaining use of the EBT card and benefits on behalf of the residents (regardless of the method of application), shall return the EBT card (if applicable) to the household. The household, not the GLA, shall have sole access to any benefits remaining in the household's EBT account at the time the household leaves the facility. The State agency must ensure that the EBT design or procedures for GLAs permit the GLA to return unused benefits to the household through a refund, transfer, or other means.

(6) If, at the time the household leaves, no benefits have been spent on behalf of that individual household, the facility must return the full value of any benefits already debited from the household's current monthly allotment back into the household's EBT account. These procedures are applicable at any time during the month. However, if the facility has already debited benefits and spent any portion of them on behalf of the individual, the facility shall do the following:

(i) If the household leaves the GLA prior to the 16th day of the month, the facility shall provide the household with its EBT card (if applicable) and one-half of its monthly benefit allotment. Where a group of residents has been certified as one household and a member of the household leaves the center:

(A) The facility shall return a pro rata share of one-half of the household's benefit allotment to the EBT account and advise the State agency that the individual is entitled to that pro rata share; and

(B) The State agency shall create a new EBT account for the individual,

issue a new EBT care and transfer the pro rata share from the original household's EBT account to the departing individual's EBT account. The facility will instruct the individual on how to obtain the new EBT card based on the State agency's card issuance procedures.

(ii) If the household or an individual member of the group household leaves on or after the 16th day of the month and the benefits have already been debited and used, the household or individual does not receive any benefits.

(iii) The GLA shall return to the State agency any EBT cards not provided to departing residents at the end of each month. Also, if the household has already left the facility and as a result, the facility is unable to perform the refund or transfer in accordance with this paragraph, the facility must advise the State agency, and the State agency must effect the return or transfer instead.

(iv) Once the resident leaves, the GLA no longer acts as his/her authorized representative. The GLA, if possible, shall provide the household with a change report form to report to the State agency the individual's new address and other circumstances after leaving the GLA and shall advise the household to return the form to the appropriate office of the State agency within 10 days.

(7) The same provisions applicable to drug and alcoholic treatment center in paragraphs (e)(7) and (e)(8) of this section also apply to GLAs when acting as an authorized representative. * * *

(8) If the residents are certified on their own behalf, the benefits may either be debited by the GLA to be used to purchase meals served either communally or individually to eligible residents or retained by the residents and used to purchase and prepare food for their own consumption. * * *

* * * * *

12. In § 273.12:

a. Revise paragraphs (a), (b), (c), and (d);

b. Amend paragraph (e)(1)(B) by removing the reference "273.9(d)(7)" and replacing it with the reference "273.9(d)(1); and

c. Amend paragraph (e)(1)(C) by removing the reference "273.9(d)(8)" and replacing it with the reference "273.9(d)(6)".

The revisions read as follows:

§ 273.12 Reporting requirements.

(a) *General requirements.* Households participating in SNAP have a responsibility to report changes in their circumstances based on reporting system to which they are assigned by the State agency. Households that are participating in Transitional Benefits Alternative are not required to report, but may report changes in their circumstances that occur while they are receiving SNAP transitional benefits. There are four client reporting systems to which State agencies may assign participating households. A State agency may not assign a household to more than one client reporting system for any given month. Whenever the State agency switches a household to a different reporting system, the State agency must notify the household of the change and explain any different reporting requirements with which the household must comply. The State agency must specify in its State plan of operation the client reporting systems selected, describe any option available under each reporting system that the State agency has chosen to implement, and identify the types of households that will be subject to each reporting system. For each client reporting system, State agencies shall not impose any additional reporting requirements on households beyond the requirements described in the SNAP regulations as follows:

(1) For change reporting, § 273.12(b);

(2) For monthly reporting, § 273.21;

(3) For quarterly reporting, § 273.12(c); and

(4) For simplified reporting, § 273.12(d).

(b) *Change reporting.* The State agency may establish a system of incident or change reporting. The following requirements are applicable to change reporting systems.

(1) *Features.* Households assigned to change reporting must report to the State agency whenever a change in any household circumstance identified in paragraph (b)(3) of this section occurs. Generally, changes must be reported within 10 days of the occurrence or within 10 days of the end of the month in which the change occurred.

(2) *Included households.* A State agency may assign any household to a change reporting system.

(3) *What households must report.* Households assigned to change reporting must report the following changes:

(i) A change of more than $50 in unearned income, excluding households with jointly processed PA/SNAP or GA/SNAP cases;

(ii) A change in the source of income, including starting or stopping a job or changing jobs, if the amount of income changes;

(iii) A change in one of the following in earned income for households certified for 6 months or less:

(A) A change in the wage rate or salary or a change in full-time or part-time employment status (as determined by the employer or as defined in the State's PA program); or

(B) A change of more than $100 in monthly earnings.

(iv) A change in household composition;

(v) A change in residence and resulting shelter cost changes;

(vi) Acquisition of a licensed vehicle that is not fully excludable under § 273.8(e), unless the State agency uses TANF vehicle rules, as provided at § 273.8(f)(4);

(vii) A change in liquid resources, such as cash, stocks, bonds, and bank accounts that reach or exceed $3,000 for elderly or disabled households or $2,000 for all other households, unless the State agency excludes resources when determining PA or SSI eligibility, as provided at § 273.2(j)(2)(v);

(viii) Reduced work hours for able-bodied adults without dependents (ABAWDs) subject to time limits of § 273.24, if the number of hours worked each week falls below 20 hours, based on a monthly average, as provided in § 273.24(a)(1)(i); and

(ix) A change in child support payments, if the household has a legal obligation to pay, unless the State agency has chosen to receive this information from the State Child Support Enforcement (CSE) agency, as provided at § 273.2(f)(1)(xii).

(4) *Special procedures for child support payments.* For households eligible for the child support exclusion at § 273.9(c)(17) or deduction at § 273.9(d)(5), the State agency may use information provided by the State CSE agency in determining the household's legal obligation to pay child support, the amount of its obligation and amounts the household has actually paid if the household pays its child support exclusively through its State CSE agency and has signed a statement authorizing release of its child support payment records to the State agency. Households do not have to provide any additional verification unless they disagree with the information provided by the State CSE. If a State agency chooses to utilize information provided by the State CSE agency in accordance with this paragraph, it must specify this choice in its State plan of operation. If the State agency does not choose to utilize information provided by its State CSE agency, the State agency may make reporting child support payments an optional change reporting item in accord in accordance with paragraph (b)(3)(ix) of this section.

(5) *How households must report.* (i) *Acceptable ways of reporting.* Households must notify the State agency of changes that have occurred to the household. The household may report by sending a change report form, by telephone, or in person. The State agency may also permit the household to report changes by other electronic means such as by fax, e-mail, or through the State agency's Web site.

(ii) *Change report form.* The State agency must provide the household with a form for reporting changes that occur during the certification period. At a minimum, the State agency must provide a change report form to households at certification, recertification, and whenever a change report form is returned by the household. A change report may be provided to households more often at the State agency's option. The change report form must be written in clear, simple language, and must meet the bilingual requirements described in § 272.4(b) of this chapter. The State agency shall pay for postage for return of the form. The report form must include:

(A) A list of the reportable items described in paragraph (b)(3) of this section and a statement that the household must report if any of these items have changed for the household since certification or the last change report filed, whichever is later;

(B) Space for the household to report whether the change will continue beyond the report month;

(C) The civil and criminal penalties for violations of the Act in understandable terms and in prominent and boldface lettering;

(D) A reminder to the household of its right to claim actual utility costs if its costs exceed the standard;

(E) The number of the SNAP office and a toll-free number or a number where collect calls will be accepted for households outside the local calling area; and

(F) If the State agency has chosen to disregard reported changes that affect some deductions in accordance with paragraph (b)(8)(ii) of this section, a statement explaining that the State agency will not change certain deductions until the household's next recertification and identifying those deductions.

(6) *When households must report.* (i) Applicants must report changes that occur after the interview but before the date of the notice of eligibility within 10 days of the date of the notice.

(ii) For all changes other than income, households must report changes within 10 days of the date the change becomes known to the household, or at the State agency's option, the household must report changes within 10 days of the end of the month in which the change occurred.

(iii) For reportable changes in income, the State agency may require the changes to be reported as early as within 10 days of the date that the household becomes aware of the change or as late as 10 days after that the household received the first payment attributable to the change. For example, in the case of new employment, the State may require the household to report the change within 10 days of the date that the household becomes aware of the new employment, within 10 days of the date the employment begins or within 10 days of the date that the household receives its first paycheck.

(iv) If the State agency requires verification of changes that increase benefits, the household must provide the verification within 10 days from the date the change is reported to provide verification required by § 273.2(f)(8)(ii).

(7) *When households fail to report.* If the State agency discovers that the household failed to report a change as required by paragraph (b) of this section and, as a result, received benefits to which it was not entitled, the State agency shall file a claim against the household in accordance with § 273.18. If the discovery is made within the certification period, the household is entitled to a notice of adverse action if the household's benefits are reduced. A household shall not be held liable for a claim because of a change in household circumstances that it is not required to report in accordance with § 273.12(b)(3). Individuals shall not be disqualified for failing to report a change, unless the individual is disqualified in accordance with the disqualification procedures specified in § 273.16.

(8) *State agency action on changes.* (i) *General requirement to act.* The State agency shall take prompt action on all changes to determine if a change affects the household's eligibility or benefit level. However, the State agency has the option to disregard a reported change to an established deduction in accordance with paragraph (b)(8)(ii) of this section.

(A) *Exception for temporary income changes.* If the change is not expected to continue for at least 1 month beyond the month in which the change is reported, the State agency is not required to act on the change.

(B) *Exception for medical changes.* The State agency must not act on changes in the medical expenses of households eligible for the medical expense deduction unless the changes are considered verified upon receipt and do not require contact with the household to verify. If changes to the household's medical expenses are considered verified upon receipt, then the State agency shall act on the changes as described in paragraph (b)(8) of this section.

(ii) *State agency postponement of action on reported changes.* (A) *Changes in certain deductible expenses.* Except for changes described in paragraph (b)(8)(ii)(C)(*1*) of this section, the State agency may postpone acting on reported changes to deductions allowed under § 273.9(d) and established at certification. If the State agency chooses to act on changes that affect a deduction, it may not act on changes to the deduction in only one direction, *i.e.,* changes that only increase or decrease the amount of the deduction, but must act on all changes that affect the deduction. A State agency that chooses to postpone changes in deductions must state in its State plan of operation that it has selected this option and specify the deductions affected. When the State agency opts to disregard a change in a deduction, the deduction amount established at certification will continue until the following occurs:

(*1*) The next recertification or after the 6th month of certification for households certified for 12 months that report a change in deductions during the first 6 months of the certification period;

(*2*) The required 12-month contact occurs for elderly or disabled households certified for 24 months in accordance with § 273.10(f)(1) that report a change in deductions during the first 12 months of the certification period;

(*3*) The 13th month of certification for households residing on reservations certified for 24 months in accordance with § 273.10(f)(2) and are required to submit monthly reports that report a change in deductions during the first 12 months of the certification; and

(*4*) The next recertification for households certified for 24 months in accordance with § 273.10(f)(1) and (f)(2) that report a change in deductions during the second 12 months of the certification period.

(B) *Changes in other reportable items.* Except for the changes described in paragraph (b)(8)(ii)(C)(*2*) of this section, the State agency may also postpone action on certain reportable items described in paragraph (b)(3) of this section when the changes are reported by the household or when the State agency learns of the changes from a source other than the household. The timeframes for required State agency action on the postponed reported items

shall be the same as for required State agency action on postponed deductions as described in paragraphs (b)(8)(ii)(A)(*1*)–(b)(8)(ii)(A)(*4*) of this section.

(C) *Changes that cannot be postponed.* State agencies may not postpone action on reported changes described in paragraphs (b)(8)(ii)(C)(*1*) and (b)(8)(ii)(C)(*2*) of this section.

(*1*) *Residence and shelter costs.* When a household reports a change in residence within the first 6 months of the certification period, the State agency must investigate and take action on corresponding changes in shelter costs. However, if a household fails to provide information regarding the associated changes in shelter costs within 10 days of the reported change in residence, the State agency should notify the household that its allotment will be recalculated without the deduction. The notice must explain that the household does not need to wait for its first utility or rental payments to contact the SNAP office. Alternative forms of verification may be accepted, if necessary.

(*2*) *Earned income and new deductions.* State agencies must act on reported changes in these items in accordance with paragraphs (b)(8)(v) and (b)(8)(vi) of this section.

(iii) *Notifying the household.* The State agency must notify the household of the receipt of the change report and how the reported change affects the household's eligibility or benefit level. The State agency must provide another change report form to the household. The State agency must also advise the household of additional verification requirements, if any, and inform the household that failure to provide verification will result in any increases in benefits reverting to the original level.

(iv) *Case file documentation.* The State agency must document the reported change in the household's case file, even if there is no change in the household's eligibility or benefit level. The State agency must document the date a change is reported, which shall be the date the State agency receives a report form or is advised of the change over the telephone or by a personal visit.

(v) *Changes that increase benefits.*

(A) *Timeframes for increasing benefit levels.*

(*1*) *If verification is required.* If the household provides verification on a timely basis as described in paragraph (b)(6)(iv) of this section, the State agency shall increase benefit levels no later than the first allotment issued 10 days after the date the change was reported. If the household does not provide verification on a timely basis as described in paragraph (b)(6)(iv) of this section but does provide the verification at a later date, the State agency shall increase benefit levels no later than the first allotment issued 10 days after the verification was received. If the household does not provide required verification, the State agency shall not increase the household's benefits in response to the reported change.

(*2*) *Household composition or reduced income.* For changes that result in an increase in a household's benefits due to the addition of a new household member who is not a member of another certified household, or due to a decrease of $50 or more in the household's gross monthly income, the State agency shall make the change effective not later than the first allotment issued 10 days after the date the change was reported. However, in no event shall these changes take effect any later than the month following the month in which the change is reported. If it is too late for the State agency to adjust the following month's allotment, the State agency shall issue supplementary benefits or otherwise provide an opportunity for the household to obtain the increase in benefits by the 10th day of the following month, or the household's normal issuance cycle in that month, whichever is later. For example, a household reporting a $100 decrease in income at any time during May would have its June allotment increased. If the household reported the change after the 20th of May and it was too late for the State agency to adjust the benefits normally issued on June 1st, the State agency would issue supplementary benefits for the amount of the increase by June 10th.

(*3*) *All other changes.* The State agency shall make the change effective no later than the first allotment issued 10 days after the date the change was reported to the State agency. For example, a $30 decrease in income reported on the 15th of May would increase the household's June allotment. If the same decrease was reported on May 28th, and the household's normal issuance cycle was on June 1st, the household's allotment would have to be increased by July 1st.

(B) *Restoration of benefits.* The State agency shall restore lost benefits if it fails to act on a change that resulted in an increase of benefits and was reported in a timely manner, as described in paragraph (b)(8)(v)(A) of this section.

(vi) *Changes that decrease benefits.*

(A) *Timeframes for decreasing benefits.*

(*1*) *Notice of adverse action.* The State agency shall issue a notice of adverse action within 10 days of the date the change was reported, unless one of the exemptions described at § 273.13(a)(3) or § 273.13(b) applies. The effective date of the benefit reduction shall be no later than the allotment for the month following the month in which the notice of adverse action period has expired, unless the household has requested a fair hearing and continuation of benefits.

(*2*) *Adequate notice.* If one of the exemptions described at § 273.13(a)(3) or § 273.13(b) applies, the State agency may issue an adequate notice instead of a notice of adverse action. The adequate notice must arrive no later than the date the benefit reduction is effective. The effective date of the benefit reduction shall be no later than the month following the change was reported.

(B) *Verified information that reduces benefits.* If the household submits verification of a change results in reduced benefits, the State agency shall establish a claim for the overissuance in accordance with § 273.18. If State agency determines that a household has refused to cooperate as defined in § 273.2(d), the State agency shall issue a notice of adverse action and terminate the household's eligibility. If a household has refused to provide verification as a part of the State agency's reporting system requirements, the household must provide the required verification at a subsequent certification or recertification.

(C) *Suspension of benefits.* The State agency may suspend a household's certification prospectively for 1 month if the household becomes temporarily ineligible because of a periodic increase in recurring income or other change not expected to continue in the subsequent month. If the suspended household again becomes eligible, the State agency shall issue benefits to the household on the household's normal issuance date. If the suspended household does not become eligible after 1 month, the State agency shall terminate the household's certification. Households are responsible for reporting changes as required by paragraph (b) of this section during the period of suspension.

(vii) *Unclear information.* During the certification period, the State agency may obtain information about changes in a household's circumstances from which the State agency cannot readily determine the effect of the change on the household's benefit amount. The State agency might receive such unclear information from a third party or from the household itself. The State agency must pursue clarification and verification of household circumstances using the following procedure:

(A) *Issue a request for contact.* The State agency must issue a written request for contact (RFC) which clearly advises the household of the verification it must provide or the actions it must take to clarify its circumstances, which affords the household at least 10 days to respond and to clarify its circumstances, either by telephone or by correspondence, as the State agency directs, and which states the consequences if the household fails to respond to the RFC.

(B) *Acceptable response to the RFC.* When the household responds to the RFC and provides sufficient information, the State agency must act on the new circumstances in accordance with paragraphs (b)(8)(i), (b)(8)(v) or (b)(8)(vi) of this section.

(C) *Failure to respond acceptably to the RFC.* The State agency has two options.

(*1*) *Option One—Termination.* If the household does not respond to the RFC, or does respond but refuses to provide sufficient information to clarify its circumstances, the State agency must issue a notice of adverse action as described in § 273.13, which terminates the case, explains the reasons for the action, and advises the household of the need to submit a new application if it wishes to continue participating in the program.

(*2*) *Option Two—Suspension.* If the household does not respond to the RFC, or does respond but refuses to provide sufficient information to clarify its circumstances, the State agency may elect to issue a notice of adverse action as described in § 273.13, which suspends the household for 1 month before the termination becomes effective, explains the reasons for the action, and advises the household of the need to submit a new application if it wishes to continue participating in the program. If a household responds satisfactorily to the RFC during the period of suspension, the State agency must:

(*i*) Reinstate the household without requiring a new application;

(*ii*) Issue the allotment for the month of suspension; and

(*iii*) If necessary, adjust the household's participation with a new notice of adverse action.

(c) *Quarterly reporting.* The State agency may establish a system of quarterly reporting. The following requirements are applicable to quarterly reporting systems.

(1) *Features.* SNAP households that are assigned to quarterly reporting must submit changes in household circumstances on a report form provided by the State agency three times a year. Except for the requirement to report reduction in ABAWD work hours, as described at § 273.12(c)(3)(i), the State agency may determine what information households must report, including items required to be reported under the change reporting system described at § 273.12(c)(3)(ii). State agencies are required to act on changes reported by the household or otherwise become known in accordance with § 273.12(c)(8).

(2) *Included households.* The State agency may include all households within a quarterly reporting system, except migrant or seasonal farm worker households, households that have no earned income and in which all adult members are elderly or disabled, households in which all members are homeless individuals, or households assigned to the monthly reporting and simplified reporting systems described at §§ 273.21(b) and 273.12(d), respectively. The State agency may also limit quarterly reporting to specific categories of households.

(3) *What households must report.* Households assigned to quarterly reporting to must report the following changes:

(i) Reduced work hours for able-bodied adults without dependents (ABAWDs) subject to time limits of § 273.24, if the number of hours worked each week falls below 20 hours, based on a monthly average, as provided in § 273.24(a)(1)(i); and

(ii) Other changes as required by the State agency, which may include the following items:

(A) A change of more than $50 in unearned income, excluding households with jointly processed PA/SNAP or GA/SNAP cases;

(B) A change in the source of income, including starting or stopping a job or changing jobs, if the amount of income changes;

(C) A change in earned income for households certified for 6 months or less:

(*1*) A change in the wage rate or salary or a change in full-time or part-time employment status (as determined by the employer or as defined in the State's PA program); or

(*2*) A change of more than $100 in monthly earnings.

(D) A change in household composition;

(E) A change in residence and resulting shelter cost changes;

(F) Acquisition of a licensed vehicle that is not fully excludable under § 273.8(e), unless the State agency uses TANF vehicle rules, as provided at § 273.8(f)(4);

(G) A change in liquid resources, such as cash, stocks, bonds, and bank accounts reach or exceed $3,000 for elderly or disabled households or $2,000 for all other households, unless the State agency excludes resources when determining PA or SSI eligibility, as provided at § 273.2(j)(2)(v); and

(H) A change in child support payments, if the household has a legal obligation to pay, unless the State agency receives this information from the State CSE agency, as provided at § 273.2(f)(1)(xii).

(4) *Special procedures for child support payments.* For households eligible for the child support exclusion at § 273.9(c)(17) or deduction at § 273.9(d)(5), the State agency may use information provided by the State CSE agency in determining the household's legal obligation to pay child support, the amount of its obligation and amounts the household has actually paid if the household pays its child support exclusively through its State CSE agency and has signed a statement authorizing release of its child support payment records to the State agency. Households do not have to provide any additional verification unless they disagree with the information provided by the State CSE. If a State agency chooses to utilize information provided by the State CSE agency in accordance with this paragraph (c)(4), it must specify this choice in its State plan of operation. If the State agency does not choose to utilize information provided by its State CSE agency, the State agency may make reporting child support payments an optional quarterly reporting item in accord in accordance with paragraph (c)(3)(ix) of this section.

(5) *How households must report.* Households must file a quarterly report form as required by the State agency. Except for reporting reduced work hours by ABAWD household members as described at § 273.12(c)(3)(i), the quarterly report shall be the sole reporting requirement for information that is required to be reported on the form. The State agency may limit the report to specific items while requiring that households report other items through the use of the change report form described at § 273.12(b)(5)(ii). If a household reports a change outside of the quarterly reporting timeframes established by the State agency, the State agency must act on the change in accordance with paragraph (c)(8) of this section.

(i) *State agency notification of household reporting requirements.* The State agency must notify households of the quarterly reporting requirement, including the consequences of failure to

file a report, at initial certification and recertification.

(ii) *Quarterly report form.* The State agency must provide the household with a form for reporting changes on a quarterly basis. At a minimum, the State agency must provide a quarterly report form to households at certification, recertification, and after a quarterly report form is returned by the household. The quarterly report form must be written in clear, simple language, and must meet the bilingual requirements described in § 272.4(b) of this chapter. The report form must include:

(A) A list of the reportable items described in paragraph (c)(3) of this section and a statement that the household must report if any of these items have changed for the household since certification or the last quarterly report filed, whichever is later;

(B) The date by which the agency must receive the form;

(C) The consequences of submitting a late or incomplete form, including whether the State agency will delay payment if the form is not received by a specified date;

(D) The verification that the household must submit with the form;

(E) Where the household may call to obtain help in completing the form;

(F) A statement to be signed by a member of the household (in accordance with § 273.2(c)(7) regarding acceptable methods of signature) indicating his or her understanding that the information provided may result in reduction or termination of benefits;

(G) A brief description of the SNAP fraud penalties;

(H) If the State agency has chosen to disregard reported changes that affect certain deductions in accordance with paragraph (c)(8)(ii) of this section, a statement explaining that the State agency will not change certain deductions until the household's next recertification and identify those deductions; and

(I) If the form requests social security numbers, the following information, which may be on the form itself or included as an attachment to the form:

(*1*) A statement of the State agency's authority to require social security numbers (including the statutory citation, the title of the statute, and the fact that providing social security numbers is mandatory);

(*2*) The purpose of requiring social security numbers;

(*3*) The routine uses for social security numbers; and

(*4*) The consequences of not providing social security numbers.

(6) *When households must report.* (i) *Changes occurring prior to certification.* Applicants in a quarterly reporting system must report changes that occur after the interview but before the date of the notice of eligibility no later than 10 days from the date the notice was received.

(ii) *Reduced ABAWD work hours.* Households must report changes described in § 273.12(c)(3)(i) no later than 10 days from the end of the month in which the reduced work hours occurred.

(iii) *Filing the quarterly report.* The State agency shall specify the date by which each quarterly report must be filed. The State agency shall provide the household a reasonable period after the end of the last month covered by the report in which to return the report.

(7) *If households fail to report.* (i) *Quarterly report.* If a household fails to file a complete report by the specified filing date, the State agency must send a notice to the household advising it of the missing or incomplete report no later than 10 days from the date the report should have been submitted. If the household does not respond to the notice, the household's participation must be terminated. The State agency may combine the notice of a missing or incomplete report with the adequate notice of termination described in paragraph (c)(8) of this section. A household shall not be held liable for a claim because of a change in household circumstances that it is not required to report in accordance with § 273.12(c)(3).

(ii) *Reportable changes outside of the quarterly report.* If the State agency discovers that the household failed to report a reduction in the hours worked by an ABAWD household member, as required by paragraph (c)(3)(i) of this section and, as a result, received benefits to which it was not entitled, the State agency shall file a claim against the household in accordance with § 273.18. If the discovery is made within the certification period, the household is entitled to a notice of adverse action if the household's benefits are reduced.

(8) *State agency action on changes.* (i) *General requirement to act.* The State agency shall take prompt action on all changes to determine if a change affects the household's eligibility or benefit level. However, the State agency has the option to disregard a reported change to an established deduction in accordance with paragraph (c)(8)(ii) of this section.

(A) *Exception for temporary income changes.* If the change is not expected to continue for at least 1 month beyond the month in which the change is reported, the State agency is not required to act on the change.

(B) *Exception for medical changes.* The State agency must not act on changes in the medical expenses of households eligible for the medical expense deduction unless the changes are considered verified upon receipt and do not require contact with the household to verify. If changes to the household's medical expenses are considered verified upon receipt, then the State agency shall act on the changes as described in paragraph (b)(8) of this section.

(ii) *State agency postponement of action on reported changes.* (A) *Changes in certain deductible expenses.* Except for changes described in paragraph (c)(8)(ii)(C)(*1*) of this section, the State agency may postpone acting on reported changes to deductions allowed under § 273.9(d) and established at certification. If the State agency chooses to act on changes that affect a deduction, it may not act on changes to the deduction in only one direction, *i.e.,* changes that only increase or decrease the amount of the deduction, but must act on all changes that affect the deduction. A State agency that chooses to postpone changes in deductions must state in its State plan of operation that it has selected this option and specify the deductions affected. When the State agency opts to disregard a change in a deduction, the deduction amount established at certification will continue until the following occurs:

(*1*) The next recertification or after the 6th month of certification for households certified for 12 months that report a change in deductions during the first 6 months of the certification period;

(*2*) The required 12-month contact occurs for elderly and disabled households certified for 24 months in accordance with § 273.10(f)(1) that report a change in deductions during the first 12 months of the certification period;

(*3*) The 13th month of certification for households residing on reservations certified for 24 months in accordance with § 273.10(f)(2) and are required to submit monthly reports that report a change in deductions during the first 12 months of the certification; and

(*4*) The next recertification for households certified for 24 months in accordance with § 273.10(f)(1) and (f)(2) that report a change in deductions during the second 12 months of the certification period.

(B) *Changes in other reportable items.* Except for the changes described in paragraph (c)(8)(ii)(C)(*2*) of this section, the State agency may also postpone action on certain reportable items described in paragraph (c)(3) of this

section when the changes are reported by the household or when the State agency learns of the changes from a source other than the household. The timeframes for required State agency action on the postponed reported items shall be the same as for required State agency action on postponed deductions as described in paragraphs (c)(8)(ii)(A)(*1*)–(c)(8)(ii)(A)(*1*)(*4*) of this section.

(C) *Changes that cannot be postponed.* State agencies may not postpone action on reported changes described in paragraphs (c)(8)(ii)(C)(*1*)–(c)(8)(ii)(C)(*2*) of this section.

(*1*) *Residence and shelter costs.* When a household reports a change in residence within the first 6 months of the certification period, the State agency must investigate and take action on corresponding changes in shelter costs. However, if a household fails to provide information regarding the associated changes in shelter costs within 10 days of the reported change in residence, the State agency should notify the household that its allotment will be recalculated without the deduction. The notice must explain that the household does not need to wait for its first utility or rental payments to contact the SNAP office. Alternative forms of verification may be accepted, if necessary.

(*2*) *Earned income and new deductions.* If the State agencies must act on reported changes in these items in accordance with paragraphs (c)(8)(v) and (c)(8)(vi) of this section.

(ii) *Notifying the household.* The State agency must notify the household of the receipt of the quarterly report and how the report affects the household's eligibility or benefit level. The State agency must also provide another quarterly report form to the household. The State agency must also advise the household of additional verification requirements, if any, and inform the household that failure to provide verification will result in any increases in benefits reverting to the original level.

(iii) *Case file documentation.* The State agency must document receipt of the quarterly report in the household's case file, even if there is no change in the household's eligibility or benefit level. The State agency must document the date the report is received. The State agency shall also document the date any other change is reported by the household in addition to the quarterly report.

(iv) *Changes that increase benefits.* (A) *Timeframes for increasing benefit levels.* (*1*) *If verification is required.* If the household provides verification on a timely basis as required by the State agency, the State agency shall increase benefit levels no later than the first allotment issued 10 days after the quarterly report was received. If the household does not provide verification on a timely basis as required by the State agency but does provide the verification at a later date, the State agency shall increase benefit levels no later than the first allotment issued 10 days after the verification was received. If the household does not provide required verification, the State agency shall not increase the household's benefits in response to the change reported on the quarterly report.

(*2*) *Household composition or reduced income.* For changes that result in an increase in a household's benefits due to the addition of a new household member who is not a member of another certified household, or due to a decrease of $50 or more in the household's gross monthly income, the State agency shall make the change effective not later than the first allotment issued 10 days after the date the change was reported. However, in no event shall these changes take effect any later than the month following the month in which the change is reported. If it is too late for the State agency to adjust the following month's allotment, the State agency shall issue supplementary benefits or otherwise provide an opportunity for the household to obtain the increase in benefits by the 10th day of the following month, or the household's normal issuance cycle in that month, whichever is later. For example, a household reporting a $100 decrease in income at any time during May would have its June allotment increased. If the household reported the change after the 20th of May and it was too late for the State agency to adjust the benefits normally issued on June 1st, the State agency would issue supplementary benefits for the amount of the increase by June 10th.

(*3*) *All other changes.* The State agency shall make the change effective no later than the first allotment issued 10 days after the date the change was reported to the State agency. For example, a $30 decrease in income reported on the 15th of May would increase the household's June allotment. If the same decrease was reported on May 28, and the household's normal issuance cycle was on June 1st, the household's allotment would have to be increased by July.

(B) *Restoration of benefits.* The State agency shall restore lost benefits if it fails to act on a change that resulted in an increase of benefits and was reported in a timely manner, as described in paragraph (c)(5)(ii) of this section.

(v) *Changes that decrease benefits.* (A) *Timeframes for decreasing benefits.* (*1*) *Notice of Adverse action.* The State agency shall issue a notice of adverse action within 10 days of the date the change was reported, unless one of the exemptions described at § 273.13(a)(3) or (b) applies. The effective date of the benefit reduction shall be no later than the allotment for the month following the month in which the notice of adverse action period has expired, unless the household has requested a fair hearing and continuation of benefits.

(*2*) *Adequate notice.* If one of the exemptions described at § 273.13(a)(3) or (b) applies, the State agency may issue an adequate notice instead of a notice of adverse action. The adequate notice must arrive no later than the date the benefit reduction is effective. The effective date of the benefit reduction shall be no later than the month following the change was reported.

(B) *Verified information that reduces benefits.* If the household submits verification of a change results in reduced benefits, the State agency shall establish a claim for the overissuance in accordance with § 273.18. If State agency determines that a household has refused to cooperate as defined in § 273.2(d), the State agency shall issue a notice of adverse action and terminate the household's eligibility. If a household has refused to provide verification as a part of the State agency's reporting system requirements, the household must provide the required verification at a subsequent certification or recertification.

(C) *Suspension of benefits.* The State agency may suspend a household's certification prospectively for 1 month if the household becomes temporarily ineligible because of a periodic increase in recurring income or other change not expected to continue in the subsequent month. If the suspended household again becomes eligible, the State agency shall issue benefits to the household on the household's normal issuance date. If the suspended household does not become eligible after one month, the State agency shall terminate the household's certification. Households are responsible for reporting changes as required by paragraph (c) of this section during the period of suspension.

(vi) *Unclear information.* During the certification period, the State agency may obtain information about changes in a household's circumstances from which the State agency cannot readily determine the effect of the change on the household's benefit amount. The State agency might receive such unclear information from a third party or from

the household itself. The State agency must pursue clarification and verification of household circumstances using the following procedure:

(A) *Issue a request for contact (RFC).* The State agency must issue a written RFC which clearly advises the household of the verification it must provide or the actions it must take to clarify its circumstances, which affords the household at least 10 days to respond and to clarify its circumstances, either by telephone or by correspondence, as the State agency directs, and which states the consequences if the household fails to respond to the RFC.

(B) *Acceptable response to the RFC.* When the household responds to the RFC and provides sufficient information, the State agency must act on the new circumstances in accordance with paragraphs (c)(8)(i), (c)(8)(v), or (c)(8)(vi) of this section.

(C) *Failure to respond acceptably to the RFC.* The State agency has two options.

(*1*) *Option One—Termination.* If the household does not respond to the RFC, or does respond but refuses to provide sufficient information to clarify its circumstances, the State agency must issue a notice of adverse action as described in § 273.13, which terminates the case, explains the reasons for the action, and advises the household of the need to submit a new application if it wishes to continue participating in the program.

(*2*) *Option Two—Suspension.* If the household does not respond to the RFC, or does respond but refuses to provide sufficient information to clarify its circumstances, the State agency may elect to issue a notice of adverse action as described in § 273.13, which suspends the household for 1 month before the termination becomes effective, explains the reasons for the action, and advises the household of the need to submit a new application if it wishes to continue participating in the program. If a household responds satisfactorily to the RFC during the period of suspension, the State agency must:

(*i*) Reinstate the household without requiring a new application;

(*ii*) Issue the allotment for the month of suspension; and

(*iii*) If necessary, adjust the household's participation with a new notice of adverse action.

(d) *Simplified reporting.* The State agency may establish a simplified reporting system. The following requirements are applicable to simplified reporting systems. A State agency that chooses to use simplified reporting procedures in accordance with this section must indicate this choice in its State Plan of Operation and specify the types of households to whom the simplified reporting requirements apply.

(1) *Features.* Simplified reporting requires minimal household reporting in comparison to the other types of household reporting systems that are available to State agencies under the SNAP regulations. During the certification period, a household must only report if gross monthly income exceeds the SNAP gross monthly income standard and if the work hours of an ABAWD falls below the minimum average of 20 hours. In addition, the State agency must require all households certified for longer than 6 months, except for households in which all adults are elderly or disabled with no earnings, to submit a periodic report. The periodic report is generally due about halfway through the certification period, for which certain changes that have occurred since certification must be reported.

(2) *Included households.* The State agency may include any household certified for at least 4 months within a simplified reporting system.

(3) *What households must report.* (i) At any time during the certification period, households must report:

(A) Gross monthly income that exceeds 130 percent of the monthly Federal poverty income guideline for the household's size that existed at the most recent certification or recertification regardless of any changes in household size; and

(B) Reduced work hours for ABAWDs subject to time limits of § 273.24, if the number of hours worked each week falls below 20 hours, based on a monthly average, as provided in § 273.24(a)(1)(i).

(ii) Households required to file a periodic report as described in paragraph (d)(5)(ii) of this section must report changes in the following:

(A) A change of more than $50 in unearned income, excluding households with jointly processed PA/SNAP or GA/SNAP cases;

(B) A change in the source of income, including starting or stopping a job or changing jobs, if the amount of income changes;

(C) A change in earned income for households certified for 6 months or less:

(*1*) A change in the wage rate or salary or a change in full-time or part-time employment status (as determined by the employer or as defined in the State's PA program); or

(*2*) A change of more than $100 in monthly earnings.

(D) A change in household composition;

(E) A change in residence and resulting shelter cost changes;

(F) Acquisition of a licensed vehicle that is not fully excludable under § 273.8(e), unless the State agency uses TANF vehicle rules, as provided at § 273.8(f)(4);

(G) A change in liquid resources, such as cash, stocks, bonds, and bank accounts reach or exceed $3,000 for elderly or disabled households or $2,000 for all other households, unless the State agency excludes resources when determining PA or SSI eligibility, as provided at § 273.2(j)(2)(v); and

(H) A change in child support payments, if the household has a legal obligation to pay, unless the State agency receives this information from the State CSE agency, as provided at § 273.2(f)(1)(xii);

(4) *Special procedures for child support payments.* For households eligible for the child support exclusion at § 273.9(c)(17) or deduction at § 273.9(d)(5), the State agency may use information provided by the State CSE agency in determining the household's legal obligation to pay child support, the amount of its obligation and amounts the household has actually paid if the household pays its child support exclusively through its State CSE agency and has signed a statement authorizing release of its child support payment records to the State agency. Households do not have to provide any additional verification unless they disagree with the information provided by the State CSE. If a State agency chooses to utilize information provided by the State CSE agency in accordance with this paragraph (d)(4), it must specify this choice in its State plan of operation. If the State agency does not choose to utilize information provided by its State CSE agency, the State agency may make reporting child support payments an optional periodic reporting item in accordance with paragraph (d)(3)(ii)(H) of this section.

(5) *How households report changes.* All households subject to simplified reporting requirements must report the changes described in paragraph (d)(3)(i) using procedures required by the State agency. Households subject to periodic reporting must also report the changes listed in paragraph (d)(3)(ii) on the periodic form provided by the State agency.

(i) *State agency notification of household reporting requirements.* The State agency must explain the simplified reporting requirements to households at certification, recertification, and if the State agency

transfers the household to simplified reporting. The State agency must provide the following information to the household:

(A) A written or oral explanation of how simplified reporting works, including what needs to be reported and verified and the consequences of failing to report changes;

(B) For households required to submit a periodic report, the additional changes that must be addressed in the periodic report, when the periodic report must be filed and how to obtain assistance in filing the periodic report; and

(C) A telephone number (toll-free number or a number where collect calls will be accepted outside the local calling area) that the household may call to ask questions or obtain help in reporting changes or completing the periodic report; and

(D) Special assistance in completing and filing periodic reports to households whose adult members are all either mentally or physically disabled or are non-English speaking or otherwise lacking in reading and writing skills that prevent them from completing and filing the report.

(ii) *Periodic report forms.* The periodic report shall be the sole reporting instrument for changes required to be reported under paragraph (d)(3)(ii) of this section, and the State agency may not require additional information to be reported on the periodic report form other than the requirements described under paragraph (d)(3)(ii) of this section. The State agency must provide periodic report forms to all households that are required to file periodic reports as described at paragraph (d)(6)(iii) of this section. At a minimum, the State agency must provide a periodic report form to households at certification, recertification, and after a periodic report form is returned by the household. The periodic report form must be written in clear, simple language, and must meet the bilingual requirements described in § 272.4(b) of this chapter. The periodic report form must include:

(A) A list of the reportable items described in paragraph (d)(3) of this section and a statement that the household must report if any of these items have changed for the household since certification or the last periodic report was filed, whichever is more recent;

(B) The date by which the agency must receive the form;

(C) The consequences of submitting a late or incomplete form;

(D) The verification that the household must submit with the form;

(E) Where the household may call for help in completing the form;

(F) A statement to be signed by a member of the household (in accordance with § 273.2(c)(7) regarding acceptable methods of signature) indicating his or her understanding that the information provided may result in reduction or termination of benefits;

(G) A brief description of the SNAP fraud penalties;

(H) If the State agency has chosen to disregard reported changes that affect certain deductions in accordance with paragraph (d)(8)(ii) of this section, a statement explaining that the State agency will not change certain deductions until the household's next recertification and identify those deductions; and

(I) If the form requests social security numbers, the following information, which may be on the form itself or included as an attachment to the form:

(*1*) A statement of the State agency's authority to require social security numbers (including the statutory citation, the title of the statute, and the fact that providing social security numbers is mandatory);

(*2*) The purpose of requiring social security numbers;

(*3*) The routine uses for social security numbers; and

(*4*) The consequences of not providing social security numbers.

(6) *When households must report.* (i) *Changes occurring prior to certification.* Applicants in a simplified reporting system must report changes that occur after the interview but before the date of the notice of eligibility no later than 10 days from the end of the calendar month in which the eligibility notice was received.

(ii) *Reduced ABAWD work hours or excess gross monthly income.* A household must report when average weekly hours worked by an ABAWD member of the household falls below 20 hours. A household must also report when its gross monthly income exceeds the gross monthly income limit for its size. A household must report either of these changes no later than 10 days from the end of the calendar month in which the change occurred, provided that the household has at least 10 days within which to report the change.

(iii) *Periodic reports.* (A) *Exempt households.* The State agency must not require the submission of periodic reports by households certified for 12 months or less in which all adult members are elderly or disabled with no earned income.

(B) *Submission of periodic reports by non-exempt households.* Households that are certified for longer than 6 months, except those in which all adult members are elderly or disabled with no earned income, must file a periodic report between 4 months and 6 months, as required by the State agency. Households in which all adult members are elderly or disabled with no earned income and that are certified for periods lasting between 13 months and 24 months must file a periodic report once a year. In selecting a due date for the periodic report, the State agency must provide itself sufficient time to process reports so that households that have reported changes that will reduce or terminate benefits will receive adequate notice of action on the report in the first month of the new reporting period.

(7) *When households fail to report.* (i) *Reportable changes outside of the periodic report.* If the State agency discovers that the household failed to report a change as required by paragraphs (d)(3)(i) and (d)(3)(ii) of this section and, as a result, received benefits to which it was not entitled, the State agency shall file a claim against the household in accordance with § 273.18. If the discovery is made within the certification period, the household is entitled to a notice of adverse action if the household's benefits are reduced.

(ii) *Periodic report.* If a household fails to file a complete periodic report by the filing date required by the State agency, the State agency must send a notice to the household advising it of the missing or incomplete report no later than 10 days from the date the report should have been submitted. If the household does not respond to the notice, the household's participation must be terminated. The State agency may combine the notice of a missing or incomplete report with the adequate notice of termination described in paragraph (d)(8) of this section. A household shall not be held liable for a claim because of a change in household circumstances that it is not required to report in accordance with § 273.12(d)(3).

(8) *State agency action on changes.* (i) *General requirement to act.* The State agency shall take prompt action on all changes described in paragraphs (d)(8)(iii) or (d)(8)(iv) of this section to determine if a change affects the household's eligibility or benefit level. However, the State agency has the option to disregard a reported change to an established deduction in accordance with paragraph (d)(8)(ii) of this section.

(A) *Exception for temporary income changes.* If the change is not expected to continue for at least 1 month beyond the month in which the change is reported, the State agency is not required to act on the change.

(B) *Exception for medical changes.* The State agency must not act on changes in the medical expenses of households eligible for the medical expense deduction unless the changes are considered verified upon receipt and do not require contact with the household to verify. If changes to the household's medical expenses are considered verified upon receipt, then the State agency shall act on the changes as described in paragraph (d)(8) of this section.

(ii) *State agency postponement of action on reported changes.* (A) *Changes in certain deductible expenses.* Except for changes described in paragraph (d)(8)(ii)(C)(*1*) of this section, the State agency may postpone acting on reported changes to deductions allowed under § 273.9(d) and established at certification. If the State agency chooses to act on changes that affect a deduction, it may not act on changes to the deduction in only one direction, *i.e.,* changes that only increase or decrease the amount of the deduction, but must act on all changes that affect the deduction. A State agency that chooses to postpone changes in deductions must state in its State plan of operation that it has selected this option and specify the deductions affected. When the State agency opts to disregard a change in a deduction, the deduction amount established at certification will continue until the following occurs:

(*1*) The next recertification or after the 6th month of certification for households certified for 12 months that report a change in deductions during the first 6 months of the certification period;

(*2*) The required 12-month contact occurs for elderly and disabled households certified for 24 months in accordance with § 273.10(f)(1) that report a change in deductions during the first 12 months of the certification period;

(*3*) The 13th month of certification for households residing on reservations certified for 24 months in accordance with § 273.10(f)(2) and are required to submit monthly reports that report a change in deductions during the first 12 months of the certification; and

(*4*) The next recertification for households certified for 24 months in accordance with §§ 273.10(f)(1) and (f)(2) that report a change in deductions during the second 12 months of the certification period.

(B) *Changes in other reportable items.* Except for the changes described in paragraph (d)(8)(ii)(C)(*2*) of this section, the State agency may also postpone action on certain reportable items described in paragraph (d)(3) of this section when the changes are reported by the household or when the State agency learns of the changes from a source other than the household. The timeframes for required State agency action on the postponed reported items shall be the same as for required State agency action on postponed deductions as described in paragraphs (d)(8)(ii)(A)(*1*)–(d)(8)(ii)(A)(*4*) of this section.

(C) *Changes that cannot be postponed.* State agencies may not postpone action on reported changes described in paragraphs (d)(8)(ii)(C)(*1*)–(d)(8)(ii)(C)(*2*) of this section.

(*1*) *Residence and shelter costs.* When a household reports a change in residence within the first 6 months of the certification period, the State agency must investigate and take action on corresponding changes in shelter costs. However, if a household fails to provide information regarding the associated changes in shelter costs within 10 days of the reported change in residence, the State agency should notify the household that its allotment will be recalculated without the deduction. The notice must explain that the household does not need to wait for its first utility or rental payments to contact the SNAP office. Alternative forms of verification may be accepted, if necessary.

(*2*) *Earned income and new deductions.* If the State agencies must act on reported changes in these items in accordance with paragraphs (d)(8)(v) and (d)(8)(vi) of this section.

(iii) *State agency action on changes reported outside of a periodic report.* Unless the State agency has opted to postpone acting on changes permitted under paragraph (d)(8)(ii) of this section, the State agency must act when the household reports that its gross monthly income exceeds the gross monthly income limit for its household size or if the household reports that the work hours of an ABAWD household member fall below the required 20-hour weekly average. The State agency must act on all other changes reported by a household outside of a periodic report in accordance with one of the following two methods:

(A) Act on any change in household circumstances that becomes known to the State agency; or

(B) Act only on changes that result in an increase of the household's SNAP benefits. However, if the State agency chooses this option, it must also act on the following changes that result in a decrease of the household's SNAP benefits:

(*1*) The household has voluntarily requested that its case be closed in accordance with § 273.13(b)(12);

(*2*) The State agency has information about the household's circumstances considered verified upon receipt; or

(*3*) There has been a change in the household's PA grant, or GA grant in project areas where GA and SNAP cases are jointly processed in accord with § 273.2(j)(2).

(iv) *State agency action on changes reported on the periodic report.* The State agency shall promptly determine if a change affects the household's eligibility or benefit level and take appropriate action. If the change is not expected to continue for at least one month beyond the month in which the change is reported, the State agency is not required to act on the change.

(A) *Notifying the household.* The State agency must notify the household of the receipt of the periodic report and how the report affects the household's eligibility or benefit level. The State agency must also provide another periodic report form to the household. The State agency must also advise the household of additional verification requirements, if any, and inform the household that failure to provide verification will result in any increases in benefits reverting to the original level.

(B) *Case file documentation.* The State agency must document receipt of the periodic report in the household's case file, even if there is no change in the household's eligibility or benefit level. The State agency must document the date the report is received. The State agency shall also document the date any other change is reported by the household in addition to the periodic report.

(v) *Changes that increase benefits.* (A) *Timeframes for increasing benefit levels.* (*1*) *If verification is required.* If the household provides verification on a timely basis as required by the State agency, the State agency shall increase benefit levels no later than the first allotment issued 10 days after the periodic report was received. If the household does not provide verification on a timely basis as required by the State agency but does provide the verification at a later date, the State agency shall increase benefit levels no later than the first allotment issued 10 days after the verification was received. If the household does not provide required verification, the State agency shall not increase the household's benefits in response to the change reported on the periodic report.

(*2*) *Household composition or reduced income.* For changes that result in an increase in a household's benefits due to the addition of a new household member who is not a member of another

certified household, or due to a decrease of $50 or more in the household's gross monthly income, the State agency shall make the change effective not later than the first allotment issued 10 days after the date the change was reported. However, in no event shall these changes take effect any later than the month following the month in which the change is reported. If it is too late for the State agency to adjust the following month's allotment, the State agency shall issue supplementary benefits or otherwise provide an opportunity for the household to obtain the increase in benefits by the 10th day of the following month, or the household's normal issuance cycle in that month, whichever is later. For example, a household reporting a $100 decrease in income at any time during May would have its June allotment increased. If the household reported the change after the 20th of May and it was too late for the State agency to adjust the benefits normally issued on June 1st, the State agency would issue supplementary benefits for the amount of the increase by June 10th.

(*3*) *All other changes.* The State agency shall make the change effective no later than the first allotment issued 10 days after the date the change was reported to the State agency. For example, a $30 decrease in income reported on the 15th of May would increase the household's June allotment. If the same decrease was reported on May 28th, and the household's normal issuance cycle was on June 1st, the household's allotment would have to be increased by July.

(B) *Restoration of benefits.* The State agency shall restore lost benefits if it fails to act on a change that resulted in an increase of benefits and was reported in a timely manner, as described in paragraph (d)(5)(ii) of this section.

(vi) *Changes that decrease benefits.* (A) *Timeframes for decreasing benefits.* (*1*) *Notice of Adverse action.* The State agency shall issue a notice of adverse action within 10 days of the date the change was reported, unless one of the exemptions described at § 273.13(a)(3) or (b) applies. The effective date of the benefit reduction shall be no later than the allotment for the month following the month in which the notice of adverse action period has expired, unless the household has requested a fair hearing and continuation of benefits.

(*2*) *Adequate notice.* If one of the exemptions described at § 273.13(a)(3) or (b) applies, the State agency may issue an adequate notice instead of a notice of adverse action. The adequate notice must arrive no later than the date the benefit reduction is effective. The effective date of the benefit reduction shall be no later than the month following the change was reported.

(B) *Verified information that reduces benefits.* If the household submits verification of a change results in reduced benefits, the State agency shall establish a claim for the overissuance in accordance with § 273.18. If State agency determines that a household has refused to cooperate as defined in § 273.2(d), the State agency shall issue a notice of adverse action and terminate the household's eligibility. If a household has refused to provide verification as a part of the State agency's reporting system requirements, the household must provide the required verification at a subsequent certification or recertification.

(C) *Suspension of benefits.* The State agency may suspend a household's certification prospectively for 1 month if the household becomes temporarily ineligible because of a periodic increase in recurring income or other change not expected to continue in the subsequent month. If the suspended household again becomes eligible, the State agency shall issue benefits to the household on the household's normal issuance date. If the suspended household does not become eligible after 1 month, the State agency shall terminate the household's certification. Households are responsible for reporting changes as required by paragraphs (d)(8)(i), (d)(8)(iv), or (d)(8)(vi) of this section during the period of suspension.

(vii) *Unclear information.* During the certification period, the State agency may obtain information about changes in a household's circumstances from which the State agency cannot readily determine the effect of the change on the household's benefit amount. The State agency might receive such unclear information from a third party or from the household itself. The State agency must pursue clarification and verification of household circumstances using the following procedure:

(A) *Issue a Request for Contact (RFC).* The State agency must issue a written RFC which clearly advises the household of the verification it must provide or the actions it must take to clarify its circumstances, which affords the household at least 10 days to respond and to clarify its circumstances, either by telephone or by correspondence, as the State agency directs, and which states the consequences if the household fails to respond to the RFC.

(B) *Acceptable response to the RFC.* When the household responds to the RFC and provides sufficient information, the State agency must act on the new circumstances in accordance with paragraph (d)(8) of this section.

(C) *Failure to respond acceptably to the RFC.* The State agency has two options.

(*1*) *Option One—Termination.* If the household does not respond to the RFC, or does respond but refuses to provide sufficient information to clarify its circumstances, the State agency must issue a notice of adverse action as described in § 273.13 which terminates the case, explains the reasons for the action, and advises the household of the need to submit a new application if it wishes to continue participating in the program.

(*2*) *Option Two—Suspension.* If the household does not respond to the RFC, or does respond but refuses to provide sufficient information to clarify its circumstances, the State agency may elect to issue a notice of adverse action as described in § 273.13 which suspends the household for 1 month before the termination becomes effective, explains the reasons for the action, and advises the household of the need to submit a new application if it wishes to continue participating in the program. If a household responds satisfactorily to the RFC during the period of suspension, the State agency must:

(*i*) Reinstate the household without requiring a new application;

(*ii*) Issue the allotment for the month of suspension; and

(*iii*) If necessary, adjust the household's participation with a new notice of adverse action.

* * * * *

§ 273.13 [Amended]

13. Amend paragraph (b)(10) by removing the words "food stamp coupon" and adding in their place the words "Snap benefit".

14. In § 273.14:

a. Amend paragraph (b)(2) by adding a new fourth sentence; and

b. Amend the first and fourth sentences of paragraph (b)(3) by removing the words " a face-to-face interview" and adding in their place the words "an interview".

The addition reads as follows:

§ 273.14 Recertification.

* * * * *

(b) * * *

(2) * * * The provisions of § 273.2(c)(7) regarding acceptable signatures on applications also apply to applications used at recertification.

* * *

* * * * *

15. In § 273.15:

a. Revise the second sentence of paragraph (c)(1);

b. Amend paragraph (c)(2) by removing the word "coupon" and replacing it with the words "SNAP benefit";

c. Amend paragraph (c)(3) by removing the word "coupon" and replacing it with the words "SNAP benefit";

d. Amend paragraph (q)(4) by removing the word "coupon" and replacing it with the words "SNAP benefit"; and

e. Amend introductory paragraph(s) by removing the word "coupon" and replacing it with the words "SNAP benefit".

The revision reads as follows:

§ 273.15 Fair hearings.

* * * * *

(c) * * *

(1) * * * Decisions that result in an increase in household benefits shall be reflected in the household's EBT account within 10 days of the receipt of the hearing decision even if the State agency must provide supplementary benefits or otherwise provide the household with an opportunity to obtain the benefits outside of the normal issuance cycle. * * *

* * * * *

16. In § 273.16, revise paragraph (c)(2) to read as follows:

§ 273.16 Disqualification for internal program violation.

* * * * *

(c) * * *

(2) committed any act that constitutes a violation of SNAP, SNAP regulations, or any State statute for the purpose of using, presenting, transferring, acquiring, receiving, possessing or trafficking of SNAP benefits or EBT cards.

* * * * *

§ 273.18 [Amended]

17. In § 273.18, remove paragraph (f)(4) and redesignate paragraphs (f)(5), (f)(6), and (f)(7) as paragraphs (f)(4), (f)(5), and (f)(6).

18. In § 273.21, revise paragraph (h)(2)(vi) to read as follows:

§ 273.21 Monthly Reporting and Retrospective Budgeting (MRRB).

* * * * *

(h) * * *

(2) * * *

(vi) Include a statement to be signed by a member of the household (in accordance with § 273.2(c)(7) regarding acceptable methods of signature), indicating his or her understanding that the provided information may result in changes in the level of benefits, including reduction and termination;

* * * * *

19. In § 273.25:

a. Revise the section heading, and paragraph (a)(1);

b. Amend the heading of (b) and introductory paragraph by removing the word "SFSP" and replacing it with the word "S–SNAP";

c. Amend paragraph (b)(1) by removing the word "SFSP" and replacing it with the word "S–SNAP and by removing the word "FSP" wherever it occurs and replacing it with the word "SNAP";

d. Amend paragraphs (b)(2) and (b)(3) by removing the word "SFSP" wherever it occurs and replacing it with the word "S–SNAP";

e. Amend paragraph (c) by removing the word "SFSP" wherever it occurs in the first sentence and replacing it with the word "S–SNAP" and by revising the third sentence; and

f. Amend paragraphs (d) and (e) by removing the word "SFSP" wherever it occurs and replacing it with the word "S–SNAP".

The revisions read as follows:

§ 273.25 Simplified SNAP.

(a) * * *

(1) Simplified SNAP (S–SNAP) means a program authorized under 7 U.S.C. 2035.

* * * * *

(c) * * * The State agency must determine under regular SNAP rules the eligibility and benefits of any household that it has found ineligible for TANF assistance because of time limits, more restrictive resource stands, or other rules that do not apply to SNAP.

* * * * *

20. Revise § 273.26 to read as follows:

§ 273.26 General eligibility guidelines.

(a) *Eligible programs.* The State agency may elect to provide transitional SNAP benefits to households whose participation in the following programs is ending:

(1) TANF; or

(2) A State-funded cash assistance (SFCA) program that provides assistance to families with children.

(b) *Description of State transitional benefits.* A State agency that chooses to provide transitional benefits must describe features of its transitional SNAP benefits alternative in its plan of operation, as specified in § 272.2(d)(1)(xvi)(H) and as described in §§ 273.26(b)(1)— 273.26(b)(6).

(1) A statement that transitional benefits are available;

(2) The eligible programs by which households may qualify for transitional benefits;

(3) If the State agency is offering transitional benefits through a SFCA program, in addition to TANF, whether the SFCA program participation runs concurrently or sequentially to TANF;

(4) The categories of households eligible for such benefits;

(5) The maximum number of months for which transitional benefits will be provided; and

(6) Any other items required to be included under this subpart H.

(c) *Eligible households.* The State agency may limit transitional benefits to households in which all members had been receiving TANF or SFCA, or it may provide such benefits to any household in which at least one member had been receiving TANF or SFCA.

(d) *Ineligible households.* The State agency may not provide transitional benefits to a household that is leaving TANF or SFCA when:

(1) The household is leaving TANF due to a TANF sanction or the household is leaving the SFCA program due to a SFCA program sanction;

(2) The household is a member of a category of households designated by the State agency as ineligible for transitional benefits;

(3) All household members are ineligible to receive SNAP benefits because they are:

(i) Disqualified for an intentional program violation in accordance with § 273.16;

(ii) Ineligible for failure to comply with a work requirement in accordance with § 273.7;

(iii) Receiving SSI in a cash-out State in accordance with § 273.20;

(iv) Ineligible students in accordance with § 273.5;

(v) Ineligible aliens in accordance with § 273.4;

(vi) Disqualified for failing to provide information necessary for making a determination of eligibility or for completing any subsequent review of its eligibility in accordance with § 273.2(d) and § 273.21(m)(1)(ii);

(vii) Disqualified for knowingly transferring resources for the purpose of qualifying or attempting to qualify for the program as provided at § 273.8(h);

(viii) Disqualified for receipt of multiple SNAP benefits;

(ix) Disqualified for being a fleeing felon in accordance with § 273.11(n); or

(x) ABAWD who fail to comply with the requirements of § 273.24.

(e) *Optional household exclusions.* The State agency has the option to exclude households where all household members are ineligible to receive SNAP benefits because they are:

(1) Disqualified for failure to perform an action under Federal, State or local law relating to a means-tested public assistance program in accordance with § 273.11(k);

(2) Ineligible for failing to cooperate with child support agencies in accordance with § 273.11(o) and 273.11(p); or

(3) Ineligible for being delinquent in court-ordered child support in accordance with § 273.11(q).

(f) *Recalculating eligibility for denied households.* The State agency must use procedures at § 273.12(f)(3) to determine the continued eligibility and benefit level of households denied transitional benefits under § 273.26.

21. In § 273.27:

a. Revise the first and fourth sentences of paragraph (a); and

b. Revise the first and third sentences of paragraph (c).

The revisions read as follows:

§ 273.27 General administrative guidelines.

(a) When a household leaves TANF or a SFCA program, the State agency may freeze for up to 5 months, the household's benefit amount after making an adjustment for the loss of TANF or the SFCA. * * * Before initiating the transitional period, the State agency must recalculate the household's SNAP benefit amount by removing the TANF payment or the SFCA payment from the household's SNAP income. * * *

* * * * *

(c) When a household leaves TANF or the SFCA program, the State agency at its option may end the household's existing certification period and assign the household a new certification period that conforms to the transitional period. * * * If the transitional period results in a shortening of the household's certification period, the State agency shall not issue a household a notice of adverse action under § 273.10(f)(4) but shall specify in the transitional notice required under § 273.29 that the household must be recertified when it reaches the end of the transitional benefit period or if it returns to TANF or the SFCA program during the transitional period.

22. In § 273.29, revise paragraphs (c) and (d) to read as follows:

§ 273.29 Transitional notice requirements.

* * * * *

(c) A statement that if the household returns to TANF or the SFCA program during its transitional benefit period, the State agency will either reevaluate the household's SNAP case or require the household to undergo a recertification. However, if the household has been assigned a new certification period in accordance with § 273.27(c), the notice must inform the household that it must be recertified if it returns to TANF or the SFCA program during its transitional period;

(d) A statement explaining any changes in the household's benefit amount due to the loss of TANF income or SFCA program income and/or changes in household circumstances learned from another State or Federal means-tested assistance program;

* * * * *

23. In § 273.32, revise the heading and the first and third sentences to read as follows:

§ 273.32 Households who return to TANF or a SFCA program during the transitional period.

If a household receiving transitional benefits returns to TANF or the SFCA program during the transitional period, the State agency shall end the household's transitional benefits and follow the procedures in § 273.31 to determine the household's continued eligibility and benefits for SNAP. * * * However, for a household assigned a new certification period in accordance with § 273.27(c), the household must be recertified if it returns to TANF or the SFCA program during its transitional period.

Dated: April 20, 2011.

Kevin Concannon,

Under Secretary, Food, Nutrition and Consumer Services.

[FR Doc. 2011–10151 Filed 5–3–11; 8:45 am]

BILLING CODE 3410–30–P

FEDERAL REGISTER

Vol. 76 Wednesday,

No. 86 May 4, 2011

Part III

Department of Health and Human Services

Centers for Medicare & Medicaid Services

42 CFR Parts 482, 485, 491, et al.
Medicare & Medicaid Programs; Influenza Vaccination Standard for Certain Participating Providers and Suppliers; Proposed Rule

DEPARTMENT OF HEALTH AND HUMAN SERVICES

Centers for Medicare & Medicaid Services

42 CFR Parts 482, 485, 491, and 494

[CMS–3213–P]

RIN 0938–AP92

Medicare & Medicaid Programs; Influenza Vaccination Standard for Certain Participating Providers and Suppliers

AGENCY: Centers for Medicare & Medicaid Services (CMS), HHS.

ACTION: Proposed rule.

SUMMARY: This proposed rule would require certain Medicare and Medicaid providers and suppliers to offer all patients an annual influenza vaccination, unless medically contraindicated or unless the patient or patient's representative or surrogate declined vaccination. This proposed rule is intended to increase the number of patients receiving annual vaccination against seasonal influenza and to decrease the morbidity and mortality rates from influenza. This proposed rule would also require certain providers and suppliers to develop policies and procedures that would allow them to offer vaccinations for pandemic influenza, in case of a future pandemic influenza event for which a vaccine may be developed.

DATES: To be assured consideration, comments must be received at one of the addresses provided below, no later than 5 p.m. EST on July 5, 2011.

ADDRESSES: In commenting, please refer to file code CMS–3213–P. Because of staff and resource limitations, we cannot accept comments by facsimile (FAX) transmission.

You may submit comments in one of four ways (please choose only one of the ways listed):

1. *Electronically.* You may submit electronic comments on this regulation to *http://www.regulations.gov.* Follow the instructions under the "More Search Options" tab.

2. *By regular mail.* You may mail written comments to the following address ONLY: Centers for Medicare & Medicaid Services, Department of Health and Human Services, Attention: CMS–3213–P, P.O. Box 8010, Baltimore, MD 21244–1850.

Please allow sufficient time for mailed comments to be received before the close of the comment period.

3. *By express or overnight mail.* You may send written comments to the following address ONLY: Centers for Medicare & Medicaid Services, Department of Health and Human Services, Attention: CMS–3213–P, Mail Stop C4–26–05, 7500 Security Boulevard, Baltimore, MD 21244–1850.

4. *By hand or courier.* If you prefer, you may deliver (by hand or courier) your written comments before the close of the comment period to either of the following addresses:

a. For delivery in Washington, DC—Centers for Medicare & Medicaid Services, Department of Health and Human Services, Room 445–G, Hubert H. Humphrey Building, 200 Independence Avenue, SW., Washington, DC 20201.

(Because access to the interior of the Hubert H. Humphrey Building is not readily available to persons without Federal government identification, commenters are encouraged to leave their comments in the CMS drop slots located in the main lobby of the building. A stamp-in clock is available for persons wishing to retain a proof of filing by stamping in and retaining an extra copy of the comments being filed.)

b. For delivery in Baltimore, MD—Centers for Medicare & Medicaid Services, Department of Health and Human Services, 7500 Security Boulevard, Baltimore, MD 21244–1850.

If you intend to deliver your comments to the Baltimore address, please call telephone number (410) 786–9994 in advance to schedule your arrival with one of our staff members.

Comments mailed to the addresses indicated as appropriate for hand or courier delivery may be delayed and received after the comment period.

Submission of comments on paperwork requirements. You may submit comments on this document's paperwork requirements by following the instructions at the end of the "Collection of Information Requirements" section in this document. For information on viewing public comments, see the beginning of the **SUPPLEMENTARY INFORMATION** section.

FOR FURTHER INFORMATION CONTACT: Lauren Oviatt, (410) 786–4683. Maria Hammel, (410) 786–1775. Jeannie Miller, (410) 786–3164.

SUPPLEMENTARY INFORMATION:

Inspection of Public Comments: All comments received before the close of the comment period are available for viewing by the public, including any personally identifiable or confidential business information that is included in a comment. We post all comments received before the close of the comment period on the following Web site as soon as possible after they have been received: *http://www.regulations.gov.* Follow the search instructions on that Web site to view public comments.

Comments received timely will also be available for public inspection as they are received, generally beginning approximately 3 weeks after publication of a document, at the headquarters of the Centers for Medicare & Medicaid Services, 7500 Security Boulevard, Baltimore, Maryland 21244, Monday through Friday of each week from 8:30 a.m. to 4 p.m. To schedule an appointment to view public comments, phone 1–800–743–3951.

I. Background

A. General Overview

Various sections of the Social Security Act (the Act) define the terms that Medicare uses for each provider and supplier's regulatory provisions. In some cases, these definitions describe the requirements providers and suppliers must meet for purposes of the Medicare program. Generally, these provisions also specify that the Secretary of the Department of Health and Human Services (HHS) (the Secretary) may establish such other requirements as the Secretary finds necessary in the interest of the health and safety of individuals receiving services.

The Secretary has established in regulations the requirements that each provider and supplier must meet to participate in the Medicare and Medicaid programs. These requirements are called the Conditions of Participation (CoPs) for providers and the Conditions for Coverage or Conditions for Certification (CfCs) for certain suppliers. The CoPs and CfCs are intended to protect public health and safety and to ensure that high quality care is provided to all persons.

To help reduce the spread of seasonal influenza infection, we are proposing to establish influenza vaccination standards for the following providers and suppliers:

- Hospitals (all types that participate in Medicare)
- Critical Access Hospitals (CAHs)
- Rural Health Clinics (RHCs)
- Federally Qualified Health Centers (FQHCs)
- End-Stage Renal Disease (ESRD) Facilities

These providers and suppliers have in common two key factors: (1) In each setting, the patients present before health care providers with staff licensed to provide vaccination at the time and location of the encounter; and (2) all have ready access to equipment and

storage appropriate for handling, controlling, and administering vaccines.

B. The Impact of Influenza

Influenza and pneumococcal disease kill more people in the United States (U.S.) each year than all other vaccine-preventable diseases combined. Influenza and pneumonia combined represent the fifth leading cause of death in the elderly. Influenza infection rates are highest among children, yet rates of serious illness and death are highest among persons age 65 or older and persons of any age who have medical conditions that place them at increased risk for complications from influenza (See Centers for Disease Control (CDC), "Prevention and Control of Influenza: Recommendations of the Advisory Committee on Immunization Practices (ACIP)", MMWR 2008; 57(RR–7): 1–60).

The estimated number of annual influenza-associated deaths from respiratory and circulatory causes (including pneumonia and influenza causes) during 1976 through 2007, ranged from 3,349 in 1986 through 1987 to 48,614 in 2003 through 2004. An average of 220,000 influenza-associated hospitalizations occurred during seasonal influenza epidemics over the same time period. Ninety percent of the influenza related deaths occur in the 65 years and older age group. When combined with underlying medical conditions, this group's estimated risk of influenza-associated hospitalizations is 560 per 100,000 persons, compared with 190 per 100,000 healthy elderly persons. Among persons age 50 to 64, the risk for influenza-associated hospitalizations is also substantially higher for persons with underlying conditions compared with healthy adults. (See CDC, "Estimates of Death Associated With Seasonal Influenza—United States, 1976–2007," MMWR 2010; 59(33):1057–1062; and CDC, "Prevention and Control of Seasonal Influenza with Vaccines: Recommendations of the Advisory Committee on Immunization Practices (ACIP)", MMWR 2009; 58(RR–8): 1–56).

The economic cost to society for seasonal influenza has been estimated to be $87.1 billion each year, including $10.4 billion in direct medical costs (See Molinari NA, Ortega-Sanchez JR, Messonnier ML, *et al.,* "The annual impact of seasonal influenza in the US: Measuring disease burden and costs," Vaccine 2007; 25: 5086–96).

C. Influenza Prevention Through Vaccination

Influenza vaccination is the primary method for preventing influenza and its more severe complications. According to the ACIP, influenza vaccination should be provided to all persons 6 months of age and older (CDC, "Prevention and Control of Influenza with Vaccines: Recommendations of the Advisory Committee on Immunization Practices (ACIP)", MMWR 2010; 59 (RR–8): 1–62). While certain groups are at higher risk for influenza infection or complications (including infants younger than 6 months and children from ages 6 months to 18 years old, pregnant women, persons age 50 or older, and adults with certain chronic medical conditions), vaccination can offer protection to all individuals. However, less than 40 percent of the population received an influenza vaccination during the 2008 to 2009 influenza season. (See CDC, "Prevention and Control of Seasonal Influenza with Vaccines: Recommendations of the Advisory Committee on Immunization Practices (ACIP)", MMWR 2009; 58(RR–8): 1–56).

Vaccination has been shown to reduce influenza illness, work absenteeism, antibiotic use, physician visits, hospitalization, and deaths. An ACIP report states that, "vaccination is associated with reductions in influenza-related respiratory illness and physician visits among all age groups, hospitalization and death among persons at high risk, otitis media (ear infections) among children, and work absenteeism among adults" (See MMWR, "Recommendations and Reports", May 28, 2004/53(RR06); 1–40).

Although influenza vaccination levels increased substantially during the 1990s, further improvements in vaccine coverage levels are needed. The Healthy People 2010 target for influenza vaccination among persons age 65 or older was 90 percent and the Healthy People 2020 target for this population continues at 90 percent (IID 12.7 at *http://www.healthypeople.gov/2020/topicsobjectives2020/objectiveslist.aspx?topicid=23).* The national influenza vaccination coverage for the 2006 to 2007 influenza season among persons age 65 or older was estimated to be only 66.8 percent (National Health Interview Survey, 2007, *http://www.cdc.gov/nchs/data/nhis/earlyrelease/200806_04.pdf*).

We believe that there are missed opportunities for vaccinating persons, especially those at higher risk for influenza complications, including opportunities to vaccinate patients who are in the hospital for other causes. In a national study of Medicare patients (who are primarily elderly or disabled) hospitalized with common clinical conditions, a large proportion had not received influenza vaccination before hospitalization and very few received vaccination while in the hospital (See Bratzler DW, Houck PM, Jiang H, *et al.,* "Failure to vaccinate Medicare inpatients: A missed opportunity", Arch Intern Med 2002; 162: 2349–56).

Although the success of childhood vaccination programs has resulted in the reduction or elimination of vaccine-preventable diseases among children, similar success has not been attained among adults (See Roush SW, Murphy TV, "Historical Comparisons of Morbidity and Mortality for Vaccine-Preventable Diseases in the U.S.", JAMA 2007; 298(18): 2155–2163).

We have made previous efforts to increase vaccination. For example, Section 4107 of the Balanced Budget Act of 1997 extended the influenza and pneumococcal vaccination campaign conducted by the Centers for Medicare & Medicaid Services (CMS) in conjunction with CDC and the National Coalition for Adult Immunization (NCAI) through fiscal year 2002, authorizing $8 million for each fiscal year from 1998 to 2002. Although Medicare coverage of influenza vaccine was increased under this legislation, rates of vaccination did not improve as anticipated.

On October 2, 2002, we published a final rule with comment period entitled, "Condition of Participation: Immunization Standards for Hospitals, Long-Term Care Facilities, and Home Health Agencies" (67 FR 61808) that removed the patient-specific physician order requirement for the administration of influenza and pneumococcal vaccines from the CoPs for Medicare and Medicaid participating hospitals, LTC facilities, and home health agencies (HHAs). The final rule was effective as of its October 2, 2002 publication date. These vaccines can now be administered per a physician approved facility or agency policy, following assessment of the patient or resident for contraindications. On October 7, 2005, we published a final rule entitled, "Condition of Participation: Immunization Standard for Long Term Care Facilities" (70 FR 58834) that requires participating nursing homes to offer all residents an annual influenza vaccination. This final rule was a major step towards increasing the vaccination rates in the LTC population, as the vaccination rate reached 90 percent in the first year the rule was effective (beginning October 7, 2005, per the Current Medicare Beneficiary Survey). More recent data from the Minimum Data Set shows that the national average for influenza vaccinations administered to LTC residents is approximately 91

percent (data period October 1, 2008 through March 31, 2010).

Other strategies for increasing rates of influenza vaccination include physician reminders (for example, flagging charts) and patient reminders (CDC, MMWR 2008; 57(RR–7): 1–60). In February 2010, the ACIP expanded its previous vaccination recommendations to include all adults beginning in the 2010 through 2011 influenza season. That is, the ACIP now recommends that all people age 6 months and older receive annual influenza vaccinations (CDC, "Prevention and Control of Influenza with Vaccines: Recommendations of the Advisory Committee on Immunization Practices (ACIP)", MMWR 2010; 59 (RR–8): 1–62).

Until this year, ACIP recommendations endorsed by the CDC (hereafter referred to as ACIP recommendations) for seasonal influenza vaccination focused on vaccination of higher risk adults, children ages 6 months to 18 years, and persons with close contact with people of higher risk. These recommendations applied to about 85 percent of the U.S. population. However, the ACIP is now focusing its attention on protecting all people, including healthy persons aged 6 months and older, who were hard hit by the 2009 H1N1 pandemic virus, which has continued circulating into this season and may continue beyond. Previously the ACIP did not specifically recommend vaccination for healthy adults between the ages of 19 and 49.

Another reason cited in favor of a universal recommendation for vaccination is that many people in currently recommended "higher risk" groups are unaware that they are considered at risk and recommended for vaccination. The ACIP also recognizes the practicality and value of issuing a simple and clear message regarding the importance of influenza vaccination in the hopes that this would remove impediments to vaccination and expand coverage.

Finally, new data collected over the course of the 2009 H1N1 pandemic indicates that some people who did not previously have a specific recommendation for vaccination may also be at higher risk of serious influenza-related complications, including those people who are obese, post-partum women, and people in certain racial/ethnic groups (*http://www.cdc.gov/media/pressrel/2010/r100224.htm* and CDC, "Prevention and Control of Influenza with Vaccines: Recommendations of the Advisory Committee on Immunization Practices (ACIP)", MMWR 2010; 59 (RR–8): 1–62).

D. Pandemic Influenza

A pandemic is the worldwide spread of a new disease. An influenza pandemic occurs when a new influenza virus emerges and spreads around the world, and most people do not have immunity. Viruses that have caused past pandemics typically originated from animal influenza viruses.

This dynamic nature of influenza viruses creates the possibility that a new virus will develop, either through mutation or mixing of individual influenza viruses, in turn creating the possibility for new viral strains that can cause illness and spread efficiently among humans. When a pandemic virus strain emerges, 25 to 35 percent of the population could develop clinical disease, increasing their risk of mortality. The direct and indirect health costs alone (not including disruptions in trade and other costs to business and industry) have been estimated to approach $181 billion for a moderate pandemic (similar to those in 1957 and 1968) with no interventions. Faced with the threat of a severe pandemic, the U.S. and its international partners will need to respond quickly and forcefully to reduce the spread of influenza and lessen the number of severe illnesses and deaths and the burden on the healthcare system. HHS has developed the *HHS Pandemic Influenza Plan* specifically to prepare for responding to a severe pandemic (see *http://www.hhs.gov/pandemicflu/plan/part1.html*).

In April 2009, a new influenza A (H1N1) virus was determined to be the cause of influenza illness in two children in the United States during March and April 2009 and the cause of outbreaks of respiratory illness in Mexico. This virus was transmitted in communities across North America within weeks and was identified in many areas of the world by May 2009. On June 11, 2009, the World Health Organization (WHO) declared a worldwide pandemic, indicating ongoing community-level transmission of the novel influenza A (H1N1) virus in multiple areas of the world. As with the seasonal influenza, vaccination is the most effective method for preventing pandemic influenza and related complications. (CDC, MMWR 2009; 58(RR10); 1–8). However, substantial amounts of infection occurred before adequate amounts of vaccine were available. While the full impact of the H1N1 pandemic has yet to be assessed, there is a need for health care providers and suppliers to be prepared to offer any available vaccines for pandemic influenza events when vaccine becomes available to ensure that delays in vaccine administration are minimized. Please see Section III of this preamble for a discussion of vaccine supply.

II. Disparities

In 1985, the Secretary of HHS issued a landmark report (colloquially known as the Heckler Report, for former HHS Secretary Margaret Heckler) which revealed large and persistent gaps in health status among different racial and ethnic groups and served as an impetus for addressing health inequalities for racial and ethnic minorities in the U.S. This report led to the establishment of the Office of Minority Health (OMH) within HHS, with a mission to address these disparities within the U.S. National concerns for these differences, termed health disparities, and the associated excess mortality and morbidity have been the focus of national health status reviews, including Healthy People 2000, 2010, and 2020.

Since the release of the Heckler Report, research has extensively documented the pervasiveness of health and health care disparities. Currently, vulnerable populations can be defined by race or ethnicity, socio-economic status, geography, gender, age, disability status, risk status related to sex and gender, and other populations identified to be at-risk for health disparities. We are aware that other populations at risk may include persons with visual, hearing, cognitive perceptual problems, language barriers, pregnant women, infants, and persons with disabilities or special health care needs.

Much attention has been given to reducing health disparities in vulnerable populations at the national level. We remain vigilant in our efforts to improve health care quality for all persons by improving health care access and by eliminating real and perceived barriers to care that may contribute to less than optimal health outcomes for all populations. We are aware that vaccination rates remain low among some minority populations. As stated above, the national influenza vaccination coverage for the 2006 through 2007 influenza season among persons age 65 and older has been estimated to be 66.8 percent; the rate is higher for non-Hispanic whites (69.3 percent) compared to non-Hispanic blacks (56.4 percent) and Hispanics (53.1 percent) (National Health Interview Survey, 2007, *http://www.cdc.gov/nchs/data/nhis/earlyrelease/200806_04.pdf*). Key reasons for these disparities include differences in vaccine-seeking by patients and differences in the

likelihood of providers recommending vaccination (Herbert PL, Frick KD, Kane RL, McBean AM, "The causes of racial and ethnic differences in influenza vaccination rates among elderly Medicare beneficiaries", Health Serv Res 2005; 40: 517–37; Winston CA, Wortley PM, Lees KA, "Factors associated with vaccination of Medicare beneficiaries in five U.S. communities: Results from the Racial and Ethnic Adult Disparities in Immunization Initiative survey", 2003. J Am Geriatr Soc 2006; 54: 303–10).

We believe that expanding access to influenza vaccination through the provisions proposed in this rule would address the needs of vulnerable populations and help to diminish health and health care disparities. We believe our proposed inclusion of FQHCs among provider types covered by this proposed rule should greatly assist in this goal. For example, 71 percent of FQHC patients live in poverty and 38 percent are uninsured (*http://www.hrsa.gov/data-statistics/health-center-data/index.html*). FQHCs include several different types of health centers, including centers that focus on particularly disadvantaged groups such as migrants, homeless, public housing residents, and native Hawaiians. Therefore, we are specifically requesting comments in regard to how we could strengthen our proposed requirements to address disparities.

III. Adequacy of Vaccine Supply

We recognize that there have been years where the release of vaccine was delayed or less than expected. For example, in the fall of 2004 there was a major shortage of inactivated influenza vaccine in the U.S. One of the major manufacturers of the influenza vaccine informed CDC in early October 2004, that none of its influenza vaccine would be available for distribution in the U.S. Because of the shortage, Federal health officials released interim guidelines as to who should receive an influenza vaccination, describing those at high-risk of influenza-related health complications as a priority group. At that time, the interim recommendations from CDC stated that people age 65 and older, as well as persons between the ages of 2 to 64 with chronic medical conditions and children ages 6 to 23 months, were to be prioritized for receiving influenza vaccination. Other groups deemed a priority were nursing home residents.

We understand that providers and suppliers may be concerned about how they would meet the requirements of this proposed rule in the event of an influenza vaccine shortage. We would not be able to require providers and suppliers to offer vaccination if they were unable to obtain vaccine supplies. We would expect providers and suppliers to make timely efforts to acquire vaccines. In the case of limited supply, we would expect providers and suppliers to follow any guidance issued by CDC regarding priority groups for vaccination.

IV. Provisions of the Proposed Regulations

We are proposing to require certain providers and suppliers to develop and implement policies and procedures regarding annual influenza and pandemic influenza vaccination. Pandemic procedures would be implemented when a pandemic event was announced by the Secretary. The proposed policies and procedures would be required to take into account, and reflect reasonable consideration of, guidelines established by nationally recognized organizations (for example, CDC and the American Academy of Pediatrics), including, but not limited to, guidelines addressing patients for whom vaccination may be prioritized or temporarily contraindicated.

The proposed influenza vaccination standard would (to the extent applicable) affect the following Medicare- and Medicaid-participating providers and suppliers: Hospitals (all types, including Short-term Acute Care, Psychiatric, Rehabilitation, Long Term Care, Children's, and Cancer), Critical Access Hospitals (CAHs), Rural Health Clinics (RHCs), Federally Qualified Health Centers (FQHCs), and End-Stage Renal Disease (ESRD) Facilities. We have proposed this standard for these provider and supplier types because we believe that each of them have—(a) RNs or other appropriately licensed medical personnel present when serving patients; and (b) the ability to manage vaccination and vaccine supplies with minimal additional cost or complications (for example, they already store and manage medications).

Due to the benefits that these provisions are estimated to offer (discussed later in this rule), we plan, after consideration of any comments received, to publish the proposed regulations as final in the early Fall of 2011, with the intent that they would become effective during the 2011 through 2012 influenza season. We believe that the potential consequences of not finalizing this rule as soon as possible far outweigh the burden that would be imposed on providers and suppliers. We welcome your comments on these publication and implementation plans.

Below, we set forth the influenza vaccination requirements that we propose each of the above providers and suppliers meet.

1. Hospitals—Conditions of Participation: Infection Control (§ 482.42)

The following provisions of this proposed rule would apply to all hospitals in the Medicare and Medicaid programs. Section 1861(e)(1) through (e)(9) of the Act—(1) Defines the term "hospital"; (2) lists some of the statutory requirements that a hospital must meet to be eligible for Medicare participation; and (3) specifies that a hospital must also meet other requirements as the Secretary finds necessary in the interest of the health and safety of the hospital's patients. Under this authority, the Secretary has established in the regulations 42 CFR part 482, the requirements that a hospital must meet to participate in the Medicare program. Section 1905(a) of the Act provides that Medicaid payments may be applied to hospital services. Regulations at 42 CFR § 440.10(a)(3)(iii) require hospitals to meet the Medicare CoPs to qualify for participation in Medicaid.

We are proposing to add a new CoP standard for influenza vaccination at § 482.42(c). The proposed standard would require all types of hospitals regulated under the hospital CoPs to establish policies and procedures for administering annual influenza vaccinations, and pandemic influenza vaccinations in the case of a pandemic event. Pandemic procedures would be implemented when a pandemic event was announced by the Secretary. The hospital's policies and procedures would have to take into account, and reflect reasonable consideration of, the recommendations in guidelines established by nationally recognized organizations (including, but not limited to, guidelines addressing patients for whom vaccination may be prioritized or temporarily contraindicated). The proposed policies and procedures would be required to ensure that the patient was offered the influenza vaccination as soon as the vaccine was available, on or after September 1 through the end of February, except when medically contraindicated, when the patient or the patient's representative or surrogate declined vaccination, or if the patient had already received that year's vaccination.

This standard would also require hospitals to educate the patient or patient's representative or surrogate on the benefits and risks associated with the vaccination. The patient's representative or surrogate, who could

be a family member or friend that accompanied the patient, could act as a liaison between the patient and the hospital to help the patient communicate, understand, remember, and cope with the interactions that took place during the visit, and explain any instructions to the patient that were delivered by the hospital staff. If a patient was unable to fully communicate directly with hospital staff, then the hospital could give vaccination information to the patient's representative or surrogate. The patient also would have the choice of using an interpreter of his or her own or one supplied by the hospital. A professional interpreter is not considered to be a patient's representative or surrogate. Rather, it is the professional interpreter's role to pass information from the hospital to the patient. In addition, this standard would require the hospital to update the patient's health records to include (at a minimum) the date the patient or patient's representative or surrogate received education on influenza vaccination, and the date of administration or refusal of the vaccine.

Hospitals often have large outpatient populations, including those who may attend clinics (such as physical therapy clinics) that are not necessarily prepared to provide vaccine injections. This proposed rule would require that all hospital patients be offered vaccination. Therefore, we would expect that the hospital's policies and procedures address all patients, whether they were receiving inpatient or outpatient services. For example, it could be appropriate to refer certain outpatients to another clinic or department on the hospital campus if the patient wanted to receive vaccination and the outpatient was in a department of the hospital that was not equipped to administer the vaccine.

As stated above, influenza vaccination would be offered throughout the influenza season to all persons 6 months of age and older for whom vaccination is not contraindicated. Vaccination is expected to offer both direct protection to the patients receiving vaccination and indirect benefits to others by decreased exposure to infected persons.

2. Critical Access Hospitals—Condition of Participation: Provision of Services (§ 485.635)

Section 1820(c)(2)(B) of the Act sets out criteria for designation as a CAH, and section 1820(e)(3) of the Act instructs the Secretary to certify a facility as a CAH if the facility, among other things, "meets such other criteria as the Secretary may require." Under this authority, the Secretary has established CoPs for CAHs at 42 CFR part 485, subpart F. Our CoP at § 485.635 sets out our requirements regarding provision of services at CAHs.

We are proposing to add a new CoP standard for influenza vaccination at § 485.635(b). The proposed standard would require Critical Access Hospitals (CAHs) to establish policies and procedures for administering annual influenza vaccination, and pandemic influenza vaccination in the case of a pandemic event. Pandemic procedures would be implemented when a pandemic event was announced by the Secretary. The CAH's policies and procedures would have to take into account, and reflect reasonable consideration of, the recommendations in guidelines established by nationally recognized organizations (including, but not limited to, guidelines addressing patients for whom vaccination may be prioritized or temporarily contraindicated). The proposed policies and procedures would ensure that the patient was offered the influenza vaccination as soon as the vaccine was available, on or after September 1 through the end of February, except when medically contraindicated, when the patient or the patient's representative or surrogate declined vaccination, or when the patient already received that year's vaccine. This standard would also require CAHs to educate the patient or patient's representative or surrogate on the benefits and risks associated with the vaccine. The patient's representative or surrogate, who could be a family member or friend that accompanied the patient, could act as a liaison between the patient and the CAH to help the patient communicate, understand, remember, and cope with the interactions that would take place during the visit, and explain any instructions to the patient that were delivered by the CAH staff. If a patient was unable to fully communicate directly with CAH staff, then the CAH could give vaccination information to the patient's representative or surrogate. The patient also would have the choice of using an interpreter of his or her own or one supplied by the CAH. A professional interpreter is not considered to be a patient's representative or surrogate. Rather, it is the professional interpreter's role to pass information from the CAH to the patient. In addition, this standard would require the CAH to update the patient's health records to include (at a minimum) the date the patient or patient's representative or surrogate received education on the influenza vaccination, and the date of administration or refusal of the vaccine.

As stated above, the influenza vaccine would be offered throughout the influenza season to all persons over the age of 6 months for whom vaccination was not contraindicated. Requiring CAHs to offer influenza vaccination would offer both direct protection to the patients receiving vaccination and indirect benefits to others through decreased exposure to infected persons.

3. Rural Health Clinics and FQHCs—Provision of Services (§ 491.9)

We are proposing to add a new CfC standard for influenza vaccination at § 491.9(d). The proposed standard would require Rural Health Clinics (RHCs) and Federally Qualified Health Centers (FQHCs) to establish policies and procedures for administering annual influenza vaccinations and pandemic influenza vaccinations, in the case of a pandemic event. Pandemic procedures would be implemented when a pandemic event was announced by the Secretary. The clinic or center's policies and procedures would have to take into account, and reflect reasonable consideration of, the recommendations in guidelines established by nationally recognized organizations (including, but not limited to, guidelines addressing patients for whom vaccination may be prioritized or temporarily contraindicated). The proposed policies and procedures would ensure that the patient was offered the influenza vaccination, except when medically contraindicated, when the patient or the patient's representative or surrogate declined vaccination, or when the patient already received that year's vaccine.

This standard would also require RHCs and FQHCs to educate the patient or patient's representative or surrogate on the benefits and risks associated with the vaccine. The patient's representative or surrogate, who could be a family member or friend that accompanied the patient, could act as a liaison between the patient and the RHC or FQHC to help the patient communicate, understand, remember, and cope with the interactions that might take place during the visit, and explain any instructions to the patient that would be delivered by the RHC or FQHC staff. If a patient was unable to fully communicate directly with RHC or FQHC staff, then the RHC or FQHC could give vaccination information to the patient's representative or surrogate. The patient would also have the choice of using an interpreter of his or her own or one supplied by the RHC or FQHC.

A professional interpreter is not considered to be a patient's representative or surrogate. Rather, it is the professional interpreter's role to pass information from the RHC or FQHC to the patient. In addition, this standard would require the RHC or FQHC to update the patient's health records to include (at a minimum) the date the patient or patient's representative or surrogate received education on the influenza vaccination, and the date of administration or refusal of the vaccine.

As stated above, influenza vaccine would be offered throughout the influenza season to all persons over the age of 6 months for whom vaccination was not contraindicated. Requiring RHCs and FQHCs to offer influenza vaccination would offer both direct protection to the patients receiving vaccination and indirect benefits to others through decreased exposure to infected persons.

4. ESRD Facility—Condition for Coverage: Infection Control (§ 494.30)

We are proposing to add a new CfC standard for influenza vaccination at § 494.30(d). The proposed standard would require ESRD facilities to establish policies and procedures for administering annual influenza vaccinations, and pandemic influenza vaccinations in the case of a pandemic event. Pandemic procedures would be implemented when a pandemic event was announced by the Secretary. The ESRD facility's policies and procedures would have to take into account, and reflect reasonable consideration of, the recommendations in guidelines established by nationally recognized organizations (including, but not limited to, guidelines addressing patients for whom vaccination might be prioritized or temporarily contraindicated). The proposed policies and procedures would ensure that each patient was offered the influenza vaccination, except when medically contraindicated, when the patient or the patient's representative or surrogate declined vaccination, or when the patient had already received that year's vaccine.

This standard would also require ESRD facilities to educate the patient or patient's representative or surrogate on the benefits and risks associated with the vaccine. The patient's representative or surrogate, who could be a family member or friend that accompanies the patient, may act as a liaison between the patient and the ESRD facility to help the patient communicate, understand, remember, and cope with the interactions that take place during the visit, and explain any instructions to the patient that are delivered by the ESRD facility staff. If a patient is unable to fully communicate directly with the ESRD facility, then the ESRD facility may give vaccination information to the patient's representative or surrogate. The patient also has the choice of using an interpreter of his or her own or one supplied by the ESRD facility. A professional interpreter is not considered to be a patient's representative or surrogate. Rather, it is the professional interpreter's role to pass information from the ESRD facility to the patient. In addition, it would require the ESRD facility to update the patient's health records to include (at a minimum) the date the patient or patient's representative or surrogate received education on the influenza vaccination, and the date of administration or refusal of the vaccine.

As stated above, the influenza vaccine should be offered throughout the influenza season to all persons over the age of 6 months for whom vaccination is not contraindicated. Requiring ESRD facilities to offer influenza vaccination would offer both direct protection to the patients receiving vaccination and indirect benefits to others through decreased exposure to infected persons.

V. Collection of Information Requirements

Under the Paperwork Reduction Act of 1995, we are required to provide 60-day notice in the **Federal Register** and solicit public comment before a collection of information requirement is submitted to the Office of Management and Budget (OMB) for review and approval. In order to fairly evaluate whether an information collection should be approved by OMB, section 3506(c)(2)(A) of the Paperwork Reduction Act of 1995 requires that we solicit comment on the following issues:

- The need for the information collection and its usefulness in carrying out the proper functions of our agency.
- The accuracy of our estimate of the information collection burden.
- The quality, utility, and clarity of the information to be collected.
- Recommendations to minimize the information collection burden on the affected public, including automated collection techniques.

We believe that many of the providers and suppliers addressed in this proposed rule already offer annual influenza vaccinations, and offered the H1N1 vaccine in 2009–2010, but for the purposes of this analysis, we are assuming that all of the providers and suppliers would need to develop new policies and procedures. We are soliciting public comment on the information collection requirements (ICRs) discussed below:

A. ICRs Regarding Condition of Participation: Infection Control (§ 482.42)

Proposed § 482.42(c)(1) would require a hospital to develop and implement policies and procedures regarding seasonal influenza and pandemic influenza vaccination. Proposed § 482.42(c)(2) would further specify that policies and procedures must take into account, and reflect reasonable consideration of, guidelines established by nationally recognized organizations. The hospital would also be required to comply with the conditions listed at proposed § 482.42(c)(3), which includes, but is not limited to, patient (or patient representative or surrogate) education with respect to the benefits, risks, and potential side effects of the vaccination.

The burden associated with the requirements in this section would be the time and effort necessary to develop and implement policies and procedures regarding annual influenza and pandemic influenza vaccinations. Since the policies would address annual vaccinations, there would also be an ongoing burden associated with maintaining the policies and procedures. Similarly, there would also be some burden associated with performing the patient (or patient representative or surrogate) education as stated at proposed § 482.42(c)(3). We estimate that 5,100 hospitals would be required to comply with these requirements. We also estimate that it would take 5 hours to develop, implement and annually maintain the policies and procedures for influenza vaccination. The estimated annual burden associated with developing, implementing and maintaining policies and procedures is 25,500 hours (5,100 hospitals × 5 hours per hospital). The total estimated annual cost associated with these requirements is $1,147,500 (25,500 hours × $45 per hour).

We further estimate that it would take each of the 5,100 hospitals 3 minutes to perform the patient or patient representative or surrogate education a total of 20,000,000 times annually. The estimated annual burden associated with this requirement is 1,000,000 hours (20,000,000 responses × .05 hours per response). The total estimated annual cost associated with these requirements is $45,000,000 (1,000,000 hours × $45 per hour).

B. ICRs Regarding Condition of Participation: Provision of Services (§ 485.635)

Proposed § 485.635 states that CAHs must develop and implement policies and procedures regarding seasonal influenza and pandemic influenza vaccination. Proposed § 485.635(b)(2) further specifies that policies and procedures must take into account, and reflect reasonable consideration of, guidelines established by nationally recognized organizations. The CAH would also be required to comply with the conditions listed at proposed § 485.635(b)(3), which include but are not limited to patient (or patient representative or surrogate) education with respect to the benefits, risks, and potential side effects of the vaccination.

The burden associated with the requirements in this section would be the time and effort necessary to develop and implement policies and procedures regarding annual influenza and pandemic influenza vaccination. Since the policies would address annual vaccinations, there would also be an ongoing burden associated with maintaining the policies and procedures. Similarly, there would also be some burden associated with performing the patient (or patient representative or surrogate) education as stated at proposed § 485.635(b)(3). We estimate that 1,300 CAHs would be required to comply with these proposed requirements. We also estimate that it would take 5 hours to develop, implement, and annually maintain the policies and procedures for influenza vaccination. The estimated annual burden associated with developing, implementing and maintaining policies and procedures is 6,500 hours (1,300 CAHs × 5 hours per CAH). The total estimated annual cost associated with these requirements is $292,500 (6,500 hours × $45 per hour).

We further estimate that it would take each of the 1,300 CAHs 3 minutes to perform the patient or patient representative or surrogate education. We have included the number of hours and costs for these services in the overall hospital total in the preceding discussion of burden for § 482.4.

C. ICRs Regarding Provision of Services (§ 491.9)

Proposed § 491.9 states that RHCs and FQHCs would have to develop and implement policies and procedures regarding seasonal influenza and pandemic influenza vaccination. Proposed § 491.9(d)(2) further specifies that policies and procedures would have to take into account, and reflect reasonable consideration of, guidelines established by nationally recognized organizations. The RHC or FQHC would also have to comply with the conditions listed at proposed § 491.9(d)(3), which would include but not be limited to patient (or patient representative or surrogate) education with respect to the benefits, risks, and potential side effects of the vaccination.

The burden associated with the requirements in this section would be the time and effort necessary to develop and implement policies and procedures regarding seasonal influenza and pandemic influenza vaccination. Since the policies would address annual vaccination, there would also be some ongoing burden associated with maintaining the policies and procedures. Similarly, there would also be a burden associated with performing the patient (or patient representative or surrogate) education as stated at proposed § 491.9(d)(3).

We estimate that 3,800 RHCs and 1,100 FQHCs would be required to comply with these requirements. We also estimate that it would take 5 hours to develop, implement and annually maintain the policies and procedures for influenza vaccination. The estimated annual burden associated with this requirement is 24,500 hours (4,900 facilities × 5 hours per facility). The total estimated annual cost associated with these proposed requirements is $1,102,500 (24,500 hours × $45 per hour).

We further estimate that it would take each of the 4,900 RHCs or FQHCs 3 minutes to perform the patient or patient representative or surrogate education 25,000,000 times annually. The estimated annual burden associated with this requirement is 1,250,000 hours (25,000,000 responses × .05 hours per response). The total estimated annual cost associated with these proposed requirements is $56,250,000 (1,250,000 hours × $45 per hour).

D. ICRs Regarding Condition: Infection Control (§ 494.30)

Proposed § 494.30 states that ESRD facilities would have to develop and implement policies and procedures regarding seasonal influenza and pandemic influenza vaccination. Proposed § 494.30(d)(2) further specifies that policies and procedures would have to take into account, and reflect reasonable consideration of, guidelines established by nationally recognized organizations. The ESRD facility would also be required to comply with the conditions listed at proposed § 494.30(d)(3), which would include, but not be limited to, patient (or patient representative or surrogate) education with respect to the benefits, risks, and potential side effects of the vaccination.

The burden associated with the requirements in this section would be the time and effort necessary to develop and implement policies and procedures regarding seasonal influenza and pandemic influenza vaccination. Since the policies would address annual vaccinations, there would also be an ongoing burden associated with maintaining the policies and procedures. Similarly, there would also be some burden associated with performing the patient (or patient representative or surrogate) education, as stated at proposed § 494.30(d)(3). We estimate that 5,400 ESRD facilities would be required to comply with these requirements. We also estimate that it would take 5 hours to develop, implement and annually maintain the policies and procedures for influenza vaccination. The estimated annual burden associated with this requirement is 27,000 hours (5,400 facilities × 5 hours per facility). The total estimated annual cost associated with these proposed requirements is $1,215,000 (27,000 hours × $45 per hour).

We further estimate that it would take each of the 5,400 ESRD facilities 3 minutes to perform the patient or patient representative or surrogate education 500,000 times annually, for a total estimated burden of 25,000 hours (500,000 responses × .05 hours per response). The estimated annual cost is $1,125,000 (25,000 hours × $45 per hour).

The total estimated annual cost associated with these proposed requirements is approximately $106 million, as shown in Table 1.

TABLE 1—ESTIMATED ANNUAL RECORDKEEPING AND REPORTING REQUIREMENTS

Regulation section(s)	OMB Control No.	Respondents	Responses	Burden per response (hours)	Total annual burden (hours)	Hourly labor cost of reporting ($)	Total labor cost of reporting ($)	Total capital/ maintenance costs ($)	Total cost ($)
§ 482.4(c)	0938—New ..	5,100	5,100	5	25,500	**45	1,147,500	0	1,147,500
		5,100	20,000,000	.05	1,000,000	**45	45,000,000	0	45,000,000
§ 485.635(b)	0938—New ..	1,300	1,300	5	6,500	**45	292,500	0	292,500
§ 491.1	0938—New ..	4,900	4,900	5	24,500	**45	1,102,500	0	1,102,500
		4,900	25,000,000	.05	1,250,000	**45	56,250,000	0	56,250,000
§ 494.30	0938—New ..	5,400	5,400	5	27,000	**45	1,215,000	0	1,215,000
		5,400	500,000	.05	25,000	45	1,125,000	0	1,125,000
Total	.....	16,700	45,516,700	.....	2,358,500	.....	.....	.....	106,132,500

*$31.31 is the mean hourly wage of a registered nurse according to the Bureau of Labor Statistics of the U.S. Department of Labor (*http://www.bls.gov/oes/current/oes291111.htm#nat*). We have increased this rate to include the fringe benefits and overhead costs of these staff, for a total of $45 an hour, rounded. Fringe benefits equal about 30% of total compensation, according to the BLS (*http://www.bls.gov/news.release/ecec.nr0.htm*). We assume that nurses will be the professional staff primarily involved in establishing policies and procedures, performing patient education, and administering vaccines, and that other staff involved will have hourly wages both higher and lower than nurses, but on average a similar amount.

**Totals for these functions may differ slightly from those in RIA analysis due to rounding. Note that the RIA contains several categories of costs, such as vaccines and vaccine administration, that are not PRA costs.

If you comment on these information collection and recordkeeping requirements, submit your comments electronically as specified in the **ADDRESSES** section of this proposed rule.

VI. Regulatory Impact Analysis

A. Introduction

We have examined the impacts of this rulemaking as required by Executive Orders 12866 (September 1993) and 13563 (January 2011). Executive Orders 12866 and 13563 direct agencies to assess all costs and benefits of available regulatory alternatives and, if regulation is necessary, to select regulatory approaches that maximize net benefits (including potential economic, environmental, public health and safety effects, distributive impacts, and equity). Executive Order 13563 emphasizes the importance of quantifying both costs and benefits, of reducing costs, of harmonizing rules, and of promoting flexibility. A regulatory impact analysis (RIA) must be prepared for rules with economically significant effects ($100 million or more in any 1 year). This proposed rule has been designated an "economically significant" regulatory action under section 3(f)(1) of Executive Order 12866. Accordingly, the rule has been reviewed by the Office of Management and Budget.

B. Statement of Need

We have determined that these proposed CoPs and CfCs would protect public health and safety and ensure high quality care to patients in the settings that would be subject to this requirement. Increasing the utilization of effective preventive services is a goal of both CMS and CDC. We believe that this proposed rule would facilitate the delivery of appropriate vaccinations in a timely manner, increase vaccination coverage levels, and decrease morbidity and mortality rates associated with seasonal influenza. We believe that the "required request" approach we are proposing would encourage patients to receive desired vaccinations without expending both time and trouble to find out where to obtain them, and allow them to obtain expert and individualized advice. Patients could receive vaccinations without making an extra trip to a medical care provider or inconveniently waiting to receive service. As a result, we expect the costs of the proposal would be far lower per patient served than alternatives, the resulting rates of vaccination and protection from influenza far higher, the economic and life-saving benefits substantial, and the net effects overwhelmingly beneficial.

C. Overall Impact

We estimate in the analysis that follows that the costs associated with this proposed rule would be approximately $330 million annually and that its quantifiable, monetized benefits would be approximately $830 million annually, reflecting decreased medical care costs ($710 million) and savings in patient time ($120 million). In addition, the proposed rule would have substantial life-saving effects that we have not quantified. The distribution of medical costs and savings by payer is summarized in the table below:

TABLE 2—DISTRIBUTION OF MEDICAL COSTS AND SAVINGS

[$ In millions]

Primary payer	Gross vaccination cost	Reduced treatment costs to payers	Net cost to payers
Medicare	$165	−$545	−$380
Medicaid	35	−35	0
Private Insurance	130	−130	0
Total	330	−710	−380

As described in more detail below, we estimate that all categories of payers would at least break even in financial terms. There is substantial uncertainty over both the cost and benefit estimates, and we believe that either estimate could be as much as 50 percent higher or lower.

D. Anticipated Costs

In order to comply with this rule, providers and suppliers would need to develop the necessary policies and

procedures to be followed by staff as standard practices. In Table 3, we estimate that the number and types of providers potentially subject to the proposed rule would be as follows:

TABLE 3—ESTIMATED NUMBER OF PROVIDERS & SUPPLIERS AFFECTED BY THE INFLUENZA VACCINATION PROPOSED RULE*

Provider/supplier	Number
Hospitals (incl. Psychiatric and Inpatient Rehabilitation Facilities)	5,100
Critical Access Hospitals (CAHs)	1,300
Rural Health Clinics (RHCs)	3,800
Federally Qualified Health Centers (FQHCs)	1,100
End-Stage Renal Disease Facilities (ESRD Facilities)	5,400
Total Providers and Suppliers	16,700

In Table 4, we present our estimate of the likely annual time and costs that providers and suppliers would need to spend each year in policy development and planning activities. Because each influenza season is unique, and because there are periodic updates to vaccine recommendations and advice, as well as local variations in disease incidence each year, we estimate that these costs would continue to be incurred each year.

TABLE 4—ESTIMATED ANNUAL POLICY AND PROCEDURE IMPLEMENTATION COSTS RELATED TO THE INFLUENZA VACCINATION PROPOSED RULE

Number of Providers/Suppliers	16,700
Hours spent per Provider/Supplier	5
Total hours	83,500
Cost per hour**	$45
Total cost to providers and suppliers (millions)	$3.75

* Source is CMS data on participating Medicare providers.
** See Table 1 for basis of hourly cost estimate.

This rule proposes that the patient's vaccination status be documented in the patient's medical record. The status must indicate, at a minimum, the following: that the patient (or the patient's representative or surrogate) was asked whether the patient was already vaccinated; that patients not already vaccinated were provided education regarding the benefits, risks, and potential side effects of influenza vaccination; and that these patients either received the influenza vaccination or did not receive the influenza vaccination due to medical contraindications, previous influenza vaccination during the current influenza season, or patient refusal. We estimate that documentation would take approximately 0.6 minutes per patient, one percent of an hour, taking into account all situations (for example, whether the patient had already received the vaccine, or newly received the vaccine).

Tables 5 and 6 summarize the likely effects of this proposed requirement, based on patient volume at each type of facility.

TABLE 5—ESTIMATED NUMBER OF PATIENTS BY TYPE OF PROVIDER & SUPPLIER

Provider/supplier	Number
Hospitals (incl. Psychiatric and Inpatient Rehabilitation Facilities)*	20,000,000.
Critical Access Hospitals (CAHs)*	Incl. above.
Rural Health Clinics (RHCs)	5,000,000.
Federally Qualified Health Centers (FQHCs)	20,000,000.
End-Stage Renal Disease Facilities (ESRD Facilities)	500,000.
Total Patients	45,500,000.

* Hospital and CAH data assume one half of annual discharges; all others use annual caseload of unique patients.

TABLE 6—ESTIMATED ANNUAL MEDICAL RECORD COSTS RELATED TO THE INFLUENZA VACCINATION PROPOSED RULE

Number of patients (millions)	45.5
Hours spent per patient	.01
Total hours (millions)	.45
Cost per hour*	$45
Total cost to providers and suppliers (millions)	$20.2M

* See Table 1 for basis of hourly cost estimate.

In addition, facility staff would need to ask the questions above (that is, ascertain vaccination status, and explain the risks and benefits to patients who have not previously been vaccinated). We estimate that this process would take an average of 3 minutes, or 0.05 of an hour, as shown in Table 7.

TABLE 7—ESTIMATED ANNUAL PATIENT INQUIRY AND COUNSELING COSTS RELATED TO THE INFLUENZA VACCINATION PROPOSED RULE*

Number of patients (millions)	45.5
Hours spent per patient	.05
Total hours (millions)	2.3
Cost per hour**	$45
Total cost to providers and suppliers (millions)	$103M

* Most data from preceding tables.
** See Table 1 for basis of hourly wage estimate.

For those patients who agree to receive vaccination, time would be required to obtain and position supplies and equipment, to perform the vaccination, and to dispose of sharps. We estimate that, on average, this would take an additional 6 minutes per patient, or 0.1 of an hour. For purposes of this analysis, we assume that twenty percent of all patients have been vaccinated before the provider request is made. The basis for this estimate is that since overall about 40 percent of Americans currently are vaccinated over the course of the influenza season (*http://www.cdc.gov/mmwr/preview/mmwrhtml/rr5908a1.htm?s_cid=rr5908a1_e*), about half of these persons would have been vaccinated before one of the provider encounters covered by this proposed rule. We estimate that one half of the remainder (40 percent) would agree to be vaccinated, for a total vaccination rate among these persons of 60 percent (see sensitivity discussion later in this analysis). We also estimate that the elderly would be disproportionately likely to take the vaccine, since the risks they face, which would have been explained to them, are so much higher than the general patient population. We have found no empirical basis for any estimate in the literature, but believe that a specific request to patients already being served by the facilities covered by this proposed rule is likely to substantially increase the proportion of the population agreeing to what, under this rule, would be a far more convenient health care offering. We welcome comments on this assumption.

Finally, we also assume that one half of the additional 40 percent would have been vaccinated elsewhere, later in the influenza season, so that only half of this amount represents additional vaccination costs to society. In other words, absent these proposed requirements, 40 percent of these persons would have been vaccinated somewhere else, but these encounters lead half of that 40 percent to be vaccinated by the providers affected by this proposed rule rather than elsewhere.

Accordingly, assuming that the patient population at these facilities on average reasonably approximates the vaccination status of the population at large, the total percentage of these patients we estimate will ultimately be vaccinated will rise to 60 percent from 40 percent (20 percent already vaccinated plus 40 percent newly vaccinated equals 60 percent total vaccination rate), but the net increase in those vaccinated is only half of the number vaccinated at these facilities (20 percent already vaccinated plus 40 percent newly vaccinated less the 20 percent who would later have been vaccinated equals the same 60 percent total vaccination rate). Using these same fractions, the net cost of vaccine administration for these patients is not the amount we estimate in the "total cost" line of Table 7 will be spent at these facilities, but that amount less spending on the 20 percent who would later have been vaccinated elsewhere, for a "net cost to society" line in Table 8 that is only half as large. We emphasize that these are rough estimates intended to show the general magnitudes of the effects of the proposed rule. Therefore, although we estimate these providers would vaccinate half of those not already vaccinated, the total percentage of the patient population in these settings we estimate will be vaccinated is 60 percent, not 80 percent.

TABLE 8—ESTIMATED ANNUAL VACCINATION ADMINISTRATION COSTS RELATED TO THE INFLUENZA VACCINATION PROPOSED RULE

Number of patients vaccinated under this rule (millions)*	18.2
Hours spent per patient	.1
Total hours (millions)	1.8
Cost per hour**	$45
Total cost to providers and suppliers (millions)	$81M
Less reduction in costs to other providers (millions)	−$40.5M
Net cost to society (millions)	$40.5M

* Forty percent of total patients.
** See Table 1 for basis of hourly cost estimate.

In addition, these patients would receive the vaccine itself. The cost of the vaccine is not well established in the literature, in part because the existence of substantial government intervention in the market, and special prices for public purchasers, complicate the matter. Medicare itself pays about $12 per dose, and for purposes of this analysis we assume that about half of the patients who would otherwise not be vaccinated are Medicare or Medicaid beneficiaries, that the price to Medicare or Medicaid is therefore applicable to half of all patients who would be vaccinated under this proposed rule. In this regard, about 40 percent of all hospital admissions are for the elderly

and almost half of all FQHC patients are Medicare (7 percent) or Medicaid (37 percent) participating (See 2009 Data Snapshot for health center data at *http://www.hrsa.gov/data-statistics/health-center-data/NationalData/2009/2009datasnapshot.html*). Medicare and Medicaid between them finance the great majority of care for the elderly, who are most at risk to influenza infection and related complications, most likely to be served by providers subject to the proposed rule, and, therefore we estimate, most likely to agree to be vaccinated. We further assume that the price for private-pay patients is twice as high, for an average of $18 across all publicly and privately financed patients. Based on these assumptions, and previous tables, Table 9 shows the cost of vaccine under the proposed rule.

TABLE 9—ESTIMATED ANNUAL VACCINE COSTS RELATED TO THE INFLUENZA VACCINATION PROPOSED RULE

Number of patients vaccinated under this rule (millions) *	18.2M
Average vaccine cost per patient	$18
Total cost billed through these providers and suppliers (millions)	$327M
Less reduction in cost billed through other providers and suppliers ** (millions)	−$163.5M
Net cost to society (millions)	$163.5M

* Forty percent of total patients.
** Twenty percent would have been vaccinated by other providers.

Unlike the previous tables, which estimated initial costs to providers and supplier subject to this proposed rule, we assume that none of the costs of vaccine will be paid by those entities. Instead, in the vast majority of cases the cost of the vaccine will be paid by public or private insurers, and in most of the remainder by the patients themselves. In total, we estimate (tables 4, 6, 7, and 8) that providers and suppliers covered by this proposed rule would incur total annual costs of about $170 million ($3.75M, $20.2M, $103M, and $40.5M respectively). Almost all of this would be reimbursed by insurance or charges to patients, so the net cost to providers would be far less. The total cost per provider and supplier, however, would average only about $5,000 even if they bore all of the cost. Since hospitals and FQHCs each account for almost half of all patients affected by this proposed rule, they would incur the great majority of these costs. Other provider and supplier types would incur far lower costs, because they have far fewer patients on average.

Another way to look at these costs is on a per-patient basis. Taking into account all costs including vaccines, whether incurred by providers, patients, or third-party insurance (including Medicare and Medicaid), the costs of the proposed rule are about $330 million annually for those who would not otherwise have been vaccinated. Based on the estimates above, the gross total cost of vaccination is about $30 per person, and the net cost $18 per person. This latter figure actually overestimates the net cost, since it assumes that the cost in other settings is identical, which it is not (see the discussion which follows). Vaccination incidental to a medical encounter for another purpose (for example, dialysis or surgical procedure) saves substantial costs in patient and provider time compared to a standalone visit.

We have not incorporated one major cost reduction in the preceding tables. Because we estimate that half of the 18 million patients vaccinated under this rule would have been vaccinated in other settings at a later time, those patients would avoid the sometimes substantial costs of time and inconvenience they would otherwise have incurred. On average, a separate trip to a medical care provider to be vaccinated is likely to consume close to an hour. For example, a trip to a drug store might involve a 20 minute drive, a 20 minute wait in line, and a 20 minute drive home. A trip to a physician office might take even longer. Assuming that patient time is valued at $20 an hour, and that the 9 million patients estimated as likely to have been vaccinated elsewhere had they not been vaccinated in one of the settings proposed in this rule, the potential time savings are on the order of 9 million hours, valued potentially at $180 million. (Note: $20 an hour is a very rough estimate taking into account that in most cases patients use leisure time rather than otherwise paid time for non-emergency visits; this value has been used in other Federal analyses of consumer time.) Some of these patients would have found ways to combine these visits with other trips to the same settings, but even if one third of them had done so, time savings would still be perhaps 6 million hours and $120 million. (There are also provider savings, but these are estimated in the preceding tables.) The time savings to these patients are a substantial additional benefit of this rule, reducing time spent by most from roughly one hour plus a few minutes for actual vaccine administration to just the few minutes for vaccine administration.

It is possible that an increase in the number of influenza vaccinations provided may result in a slight increase in the number of adverse events. Persons who experience an adverse event as a result of an influenza vaccination may be eligible for compensation under the National Vaccine Injury Compensation Program.

E. Anticipated Benefits

For purposes of a point estimate of benefits, we estimate above that the overall vaccination rate, by the end of the influenza season, would rise from about 40 percent to about 60 percent as the net result of this rule, if issued in final as proposed, for approximately 45 million covered patients. That corresponds to a net additional 9 million persons vaccinated. These persons would on average be younger than those protected under the rule issued in 2005 to protect the disproportionately elderly patients in long term care facilities, but would on average be far older than the population at large simply by virtue of Medicare or Medicaid coverage and disproportionate use by the elderly of providers addressed under this proposed rule. This estimate of effectiveness is heavily influenced by the results of the recent initiative to increase vaccination rates among nursing home residents. It appears that person-to-person counseling by health care professionals, especially to elderly patients already under care, with vaccination conveniently available after patient assent, is vastly more effective in obtaining patient participation than generalized public awareness campaigns or simple availability of insurance coverage. For example, a person willing to be vaccinated after a public awareness campaign would still have to identify a participating provider, travel to the vaccination location, arrive at a

time when the service is offered, and wait for service (in many settings patients wait in long lines). The patients addressed by this proposed rule avoid such inconvenience and cost.

The benefits of influenza vaccination in preventing morbidity and mortality are highest among the elderly, so the benefits of this proposed rule would not be as high, per person, as under the 2005 rule, which addressed the overwhelmingly elderly population of nursing homes. We nonetheless estimate the benefits of this proposed rule as very substantial, many times higher than the cost of the rule. Rates of influenza infection, seriousness of illness, vaccine effectiveness, and mortality prevention all vary by age of patient and by health status of patient. For example, a recent study estimates the average annual rate of influenza-associated deaths with underlying respiratory and circulatory causes to be .2 per 100,000 persons in the population from infancy through age 18, 1.5 per 100,000 persons from age 19 through age 64, and 66.1 per 100,000 persons at age 65 or above (M.G. Thompson, *et al,* "Estimates of Deaths Associated with Seasonal Influenza—United States, 1976–2007," CDC, MMWR 10, 59(33): 1057–1062).

We do not have detailed data on age and medical conditions for all of the settings to which this proposed rule would apply. However, a substantial majority of hospital patients are middle-aged (20 percent ages 45 to 64) or elderly (40 percent ages 65 or older), and hospital patients account for almost half of those that this proposed rule would affect.

Based on its own conclusions from recent research, ACIP recommends seasonal influenza vaccination at all ages (for a highly detailed discussion, see "Prevention and Control of Seasonal Influenza with Vaccines," op cit, pages 27–28): "Influenza vaccine should be provided to all persons who want to reduce the risk for becoming ill with influenza or of transmitting it to others. However, emphasis on providing routine vaccination annually to certain groups at higher risk for influenza infection or complications is advised, including all children aged 6 months–18 years, all persons aged greater than 50 years, and other adults at risk for medical complications from influenza."

Recent literature suggests the benefits of vaccination for influenza would outweigh costs for populations of all ages, regardless of overall risk categories (of course, vaccination would be contraindicated for some specific patients; these are broad population estimates).

Another recent study put the potential economic and life saving benefits of vaccination in clear perspective (Molinari, Noelle-Angelique, *et al.,* "The Annual Impact of Seasonal Influenza in the U.S.: Measuring Disease Burden and Costs," Vaccine 25 (2007), pages 5086–5096). This study calculated the total annual economic burden of influenza, including medical costs, lost earnings, and lost life, at about $87 billion annually (in 2003 dollars).

The effectiveness of vaccination in preventing morbidity and mortality presents another major uncertainty. Among children, for example, it depends on which type of vaccine is used, and whether one or two doses are given, in addition to risk status, virulence of the virus in a particular year, and how well the vaccine for a particular year matches the virus strains circulating that year. Study results also vary widely because it is difficult to control for underlying risk factors. As previously discussed in this preamble, the patients of both hospitals and health centers are disproportionately likely to fall in the least healthy categories. The ACIP report, "Prevention and Control of Seasonal Influenza with Vaccines," compares the results of vaccine effectiveness studies and finds typical results to fall between 27 and 70 percent effectiveness in preventing hospitalization for pneumonia and influenza among elderly adults.

The 2005 final rule (70 FR 58834), discussed earlier in this preamble, estimated that in long term care facilities a 16 percent increase in the percent vaccinated annually would increase the number vaccinated by 320,000, reduce the number of illnesses by 10,000, reduce the number of hospitalizations by 5,300, and reduce the number of deaths by about 2,300.

The projected increase in vaccination under this proposed rule for persons aged 65 or older would be approximately 3.2 million persons if we assume that 40 percent of 20 million persons are aged 65 or older and that this population would have an additional take up rate of 40 percent. If we assume that immunization for the hospitalized elderly is roughly half as effective in preventing illness compared to immunization for the long term care population (that is, prevents illness in 1.5% of the immunized rather than 3%), the additional vaccination would result in a reduction in number of illnesses in this group of about 50,000. If we assume that the likelihood of hospitalization is somewhat higher in the non-institutionalized group (those institutionalized already receiving 24-hour medical care), the reduction in illnesses might reduce the number of hospitalizations by about 35,000.

In contrast to the long term care situation, however, the same patients are unlikely to present to providers and suppliers affected by this proposed rule year after year (the major exception to this point would be ESRD patients). Finally, it is unlikely that the risks of hospitalization and death are as high in the elderly population at large, or even the elderly population already hospitalized or being served in other provider settings, as in long term care facilities. Unfortunately, none of the existing literature estimates lives saved for persons who are already in medical care settings, in many cases very ill, as contrasted to persons of the same age who are not acutely ill or in some cases (for example, ESRD patients) chronically ill.

All of these uncertainties are so substantial that we cannot estimate with any confidence the numbers of lives likely to be saved. Likewise, estimates of the value of lives saved would not only reflect these uncertainties, but also the many uncertainties surrounding such valuations. Accordingly, we do not attempt to estimate in either quantitative or dollar terms the very substantial life-saving benefits of this proposed rule.

There are also uncertainties surrounding the likely reductions in morbidity and medical treatment costs for these patients, but those are far less. Accordingly, we have used adjusted estimates from the 2005 rule of $10,000 per hospitalization to provide a rough estimate of future medical care savings. By far the largest category of savings, in dollar terms, results from hospitalizations prevented. In total, we estimate medical care savings to be approximately $710 million annually, as detailed in the analysis that follows.

F. Distribution of Costs and Benefits

The estimates presented in this analysis are primarily based on economic costs and benefits to providers and patients. Such estimates do not address who pays. In this section of the analysis we analyze the likely incidence of costs and savings to various categories of payers, including insurance programs and patients themselves.

Absent detailed data on the rapidity and extent of future adjustments, or of the rapidity and extent of future adjustments in insurance payments (for example, to what extent will Medicare or other insurance payments to hospitals reflect vaccine administration costs), it is impossible to make precise estimates of the incidence of costs.

However, it is likely that about two-fifths of the affected patients would be elderly Medicare beneficiaries. Because Medicare pays less for vaccine than other payers, Medicare would therefore pay roughly one-fourth of the cost of vaccine and vaccine administration costs, or about $80 million annually, for elderly Medicare patients (some of this cost would be borne by the elderly, through their share of the Part B premium). Assuming that all of the hospitalizations prevented among the elderly would be Medicare patients, that the average cost of an influenza hospitalization is on the order of $10,000 for Part A costs, and that 35,000 elderly hospitalizations would be avoided, offsetting savings to the Medicare program from reduced hospitalization would be about $350 million, less roughly $10 million for the Part A deductible, for a net Part A saving to the government of $340 million. There would also be ambulatory cost savings. For hospitalized patients we assume these would average $2,000, for gross savings of $50 million and net savings to the government of $40 million after cost sharing. Assuming 50,000 fewer illnesses in this group not leading to hospitalization, and an average of one visit per patient at an average cost of $350, ambulatory savings to Medicare for these elderly patients would be about $15 million after patient cost sharing. These calculations lead to an estimate of savings to the government of $350 million for Part A patients age 65 and older, and of $65 million for Part B patients 65 and older. The total would be $430 million under these assumptions and calculations. These estimates assume that the numbers of hospitalizations and illnesses prevented among the elderly would be at slightly over half the rate estimated for the long term care vaccination program, and are correspondingly sensitive to changes in this assumption.

The estimates above are for elderly participants in Medicare. However, about one-fifth of beneficiaries enrolled in Medicare are disabled rather than elderly. Assuming that disabled beneficiaries are roughly as likely as the elderly to use the providers that would be affected by this proposed rule, to accept the offer, and to benefit (they are younger, but less healthy, on average), we would expect the savings and cost estimates to be roughly 20 percent higher than the figures above for the Medicare program as a whole. The total net savings to the Medicare program would be approximately $540 million in the first year, based on the assumptions above.

We note that patients would not bear directly any of the vaccine or vaccine administration costs. Insured patients would gain from reductions in both inpatient and outpatient incidence of influenza-caused treatment through reduced coinsurance and copayments for the treatments they would otherwise receive. The uninsured would gain from elimination of inpatient and outpatient charges to which they would otherwise be exposed.

Other insurers, including Medicaid, would incur costs roughly in proportion to their share of the population in the settings we propose to cover, and taking into account whether they are primary or secondary. Absent precise data, we think it likely that Medicaid would be affected roughly in proportion to its coverage of the non-elderly and non-disabled population (for whom Medicare is primary), realizing vaccine and vaccine administration costs of roughly 10 percent of the total. Accordingly, Medicaid payments to providers would be on the order of $30 million a year (ten percent of $330 million in costs incurred by providers). These payments would be financed through the same Federal and State shares as other Medicaid payments for these services. Medicaid savings would be far lower, proportionally, than Medicare costs because the incidence of hospitalization among younger influenza patients is so much lower. We think it reasonable to assume that hospitalization savings would roughly equal and quite possibly exceed vaccine administration costs, so that the net effect of the rule on Medicaid costs would be close to zero, or even cost-saving. We emphasize that these are very rough estimates.

We have no better basis for estimating costs or savings to private insurers. Overall, we think that they will pay about half of the costs of the program. Because their enrollees are generally below age 65, and if above such age have Medicare as primary insurance, their savings from reduced medical care costs will reflect the far lower incidence of influenza morbidity and mortality at younger ages, and the correspondingly lower potential cost savings. Similar to our conclusion for Medicaid, we think it reasonable to assume that savings to private health plans would likely approximate the costs of the program, and would in any event have a negligible effect on overall costs. Again, we emphasize that these are very rough estimates.

Accordingly, as outlined in Table 10, all categories of payers would at least break even in financial terms, and those that disproportionately serve the oldest and sickest, notably Medicare, would likely achieve substantial savings in relation to their costs.

TABLE 10—DISTRIBUTION OF MEDICAL COSTS AND SAVINGS

[$ In millions]

Primary payer	Gross vaccination cost	Reduced treatment costs to payers	Net cost to payers
Medicare	$165	−$545	−$380
Medicaid	35	−35	0
Private Insurance	130	−130	0
Total	330	−710	−380

G. Uncertainty of the Estimated Costs and Benefits

Clearly, both these cost and benefit estimates are subject to substantial uncertainty. For example, actual rates for vaccination may be considerably higher or lower than those we have estimated. Some covered providers and suppliers are already taking the steps, incurring the costs, and helping their clients attain the life-saving benefits we have estimated. However, the preponderance of the evidence discussed earlier in this preamble suggests that the present level of effort is low. Due to this and other uncertainties, we believe that the costs and benefits actually realized under the proposed rule could easily be half, or double, our estimates. Perhaps the

greatest uncertainty lies in our estimate that roughly half of the patients who would otherwise be unvaccinated will accept the vaccination offers made under the proposed rule. If the incremental proportion were to be only one-fourth, both costs and benefits would be halved. If almost all patients accepted the offers, both costs and benefits would be approximately doubled. We think both extremes are quite unlikely (for example, some patients will be firm refusers of vaccine no matter how well the offer is made). We do not, however, have great confidence that the incremental percentage will be at or near 50 percent, rather than 40 percent or 60 percent. Another area of uncertainty is the effectiveness of the vaccine in preventing influenza, particularly among the elderly, with estimates quoted previously in this analysis ranging from 27 to 70 percent. There will be some independent effect from the recently issued rule on coverage of preventive health services by health insurance plans, but that rule contained no estimate of resulting vaccination improvements and we have no way to take those into account in our estimates. As another example of the caution that should be used in interpreting these estimates, dollar estimates of benefits depend crucially not only on these take-up rates, but also on the uncertain extent to which these types of atypical patients would otherwise have been hospitalized had they become ill from influenza.

As previously discussed, we do not include an estimate in either quantitative or dollar terms of the very substantial life-saving benefits of this proposed rule in our primary estimate. However, if as many as 5,000, 10,000, or even 20,000 deaths from influenza complications could be avoided, even a very conservative value per life saved could yield many billions of dollars in benefits.

Throughout this analysis, we have used rounded numbers to emphasize that none of the assumptions, calculations, and estimates should be taken as precise or certain. We welcome comments on all assumptions and calculations.

H. Effects of Pandemic Provisions

We have not attempted to quantify the costs or benefits of the proposed requirements regarding preparation for, and services under, potential future pandemics. We believe that the costs of planning and developing procedures for such services fall within the estimates we have developed for annual influenza. The actual costs of vaccination, and benefits thereof, are essentially unpredictable. No one knows when another pandemic may arrive. We believe, however, that the potential benefits exceed the potential costs to at least the same degree as for annual influenza. We welcome comments and information on this conclusion, and any quantitative information that may shed more light on costs and benefits.

I. Alternatives Considered

We considered other alternatives regarding vaccinating patients and residents against influenza.

One alternative would be to keep the present rules, as they are written (that is, no requirements). The current regulations, however, have so far not been effective in increasing the annual rate of influenza vaccination, with the notable and extremely important exception of long term care facility patients. The increase in percent vaccinated in this high-risk group to approximately 90 percent (as discussed previously) demonstrates unequivocally the potency of the "routine request" protocol recently applied to that group and herein proposed for additional tens of millions of patients.

Outside long term care settings, despite the Federal government's unified efforts to increase the availability of safe and effective vaccines, and despite substantial progress in reducing many vaccine preventable diseases, many at-risk individuals and care-givers are not receiving influenza vaccines. Section 4107 of the Balanced Budget Act of 1997 extended the influenza vaccination campaign being conducted by CMS in conjunction with CDC and the National Coalition for Adult Immunization through fiscal year 2002, authorizing $8 million for each fiscal year from 1998 to 2002. Although Medicare reimbursement for influenza vaccination was increased under this legislation, rates of vaccination did not improve as anticipated. This suggests that neither improved payment nor traditional campaigns are likely to lead to substantial improvements in annual vaccination rates.

Another alternative would be to explore untried ways to educate providers on the value of influenza vaccines without rulemaking. However, as discussed in studies cited earlier in this rule, provider education, so far, has not been effective in improving vaccination rates.

There are a number of additional alternatives that we have considered within the context of the proposed rule.

We have not proposed requiring these providers and suppliers to offer pneumococcal vaccine, in contrast to the 2005 rule for long term care facilities. Pneumococcal vaccine is recommended for all children less than 59 months old. In addition, children older than 24 months who are at high risk of pneumococcal disease, adults over the age of 65, and adults under age 65 with certain risk factors are recommended to receive the pneumococcal vaccine. While there is a large population that could benefit from pneumococcal vaccination, the vaccine should only be given once or twice, depending on the patient's age. Because it is not designed or recommended for regular administration, we believe it is best provided or prescribed by primary care physicians who maintain long-term records for patients. We welcome comments on this tentative decision, and information on any research evidence that might bear on the issue.

The precise timing of vaccination and the precise populations to be offered vaccination may vary from year to year, depending on the availability of vaccine. We considered various ways of providing flexibility for supply problems, and concluded that the best way to handle such contingencies without having to engage in rulemaking annually, or in situations where conditions change too rapidly for normal rulemaking procedures, would be to require that facility planning take into account the latest recommendations of appropriate expert bodies.

We considered both expanding and contracting the categories of suppliers and providers covered in this rule. The set we have chosen have in common two key factors: (1) in each setting the patients present before health care providers with staff licensed to provide vaccination available at the time and location of the encounter, and (2) ready access to equipment and storage appropriate for handling, controlling, and administering vaccine. In contrast, home health agency aides (as an example) are rarely, if ever, registered nurses, and would not normally have the means to transport refrigerated vaccines. Hospices, while capable of administering vaccine, would be inappropriate providers for this purpose because of the terminal health situations faced by their patients.

We also considered requiring providers to offer vaccination only to higher risk patients, such as those over 45 years of age or over 65 years of age. A variation would be for providers to use medical risk categories, such as suppressed immune system or weak heart or lung function, to identify patients most in need of vaccine protection at all ages. We do not

propose such alternatives, but welcome comment on them. The reasons for not departing from a universal requirement are threefold. First, all patient categories, even healthy children, have now been shown to benefit from vaccination. All payers and providers roughly break even (or do better) from a universal, uniform practice. Second, such alternatives add complexity and cost if based on diagnostic or other medical indicators requiring individualized decisions about each patient, and are arguably too simplistic or arbitrary otherwise. For example, a 64-year-old may not be any less likely to benefit from vaccination than a 65-year-old. Third, and of great practical importance, if a provider has any substantial number of patients in any mandatory group (for example, patients over age 65), the provider will have to do the same planning, develop the same protocols, provide the same staff training, go through the same vaccine ordering and storage procedures, *etc.* as it would if all patients were covered. While a precise calculation is difficult, it appears that there are significant economies of scale and very little savings in burden to providers from covering all patients.

We welcome comments on these and any other alternatives that would improve the rule.

J. Accounting Statement

As required by OMB Circular A–4 (available at *http://www.whitehouse.gov/omb/circulars/a004/a-4.pdf*), in Table 10, we have prepared an accounting statement showing the classification of the costs and benefits associated with the provisions of this proposed rule. The accounting statement is based on estimates provided in the RIA. Because we assume that costs and benefits remain constant in real terms over the years, the discounted costs and benefits, when "annualized" to an average yearly amount, are the same as the one year/first year estimates provided throughout this analysis. We have used as an estimating horizon a 10-year period, which is the lowest normally used in Regulatory Impact Analyses. We would not expect, however, that the estimates would in fact remain as projected. As emphasized repeatedly throughout this analysis, our estimates are very rough and we would not be surprised to see real world effects that are substantially higher or lower. For purposes of this table, we have used a low estimate that is half our primary estimate, and a high estimate that is double our primary estimate.

TABLE 11—ACCOUNTING STATEMENT: CLASSIFICATION OF ESTIMATED COSTS AND SAVINGS

[$ In millions]

Category	Primary estimate	Low estimate	High estimate	Units		
				Year dollars	Discount rate (percent)	Period covered *
Benefits						
Annualized Qualitative (Unquantified) Value of Lives Saved among Patients Immunized.	Thousands of lives saved but no precise estimate.	Thousands of lives saved but no precise estimate.	Thousands of lives saved but no precise estimate.	2011	7	2011–20
	Thousands of lives saved but no precise estimate.	Thousands of lives saved but no precise estimate.	Thousands of lives saved but no precise estimate.	2011	3	2011–20
Annualized Value of Travel and Convenience Savings to Patients Immunized.	$120	$60	$240	2011	7	2011–20
	$120	$60	$240	2011	3	2011–20
Annualized Value of Reduced Medical Care Costs Incurred for Patients Immunized.	$710	$355	$1,420	2011	7	2011–20
	$710	$355	$1,420	2011	3	2011–20
Costs						
Annual Monetized Costs to Medical Care Providers and Suppliers.	$330	$165	$660	2011	7	2011–20
	$330	$165	$660	2011	3	2011–20
Transfers						
Annualized Payments to Medical Care Providers and Suppliers by Federal Government.	($380)	($190)	($760)	2011	7	2011–20
	($380)	($190)	($760)	2011	3	2011–20

* The 6-month influenza season begins each fall and ends the next spring, thus falling in two calendar years. The first season covered by this proposed rule begins in the fall of 2011.

VII. Regulatory Flexibility Act (RFA)

The RFA (15 U.S.C. 603(a)), as modified by the Small Business Regulatory Enforcement Fairness Act of 1996 (SBREFA) (Pub. L. 104–121), requires agencies to determine whether proposed or final rules would have a significant economic impact on a substantial number of small entities and, if so, to prepare a Regulatory Flexibility Analysis and to identify in the notice of proposed rulemaking or final rulemaking any regulatory options that could mitigate the impact of the proposed regulation on small businesses. For purposes of the RFA, small entities include businesses that are small as determined by size standards issued by the Small Business Administration, nonprofit organizations, and small governmental jurisdictions. Individuals and States are not included in the definition of a small entity.

For purposes of the RFA, we normally assume that all of the entities affected by Medicare-related rules are small, either by virtue of size or nonprofit status. As indicated in the analysis that follows, we estimate that most affected entities would incur costs of only a few thousand dollars a year. In the case of hospitals, costs would be somewhat higher but would vary primarily with patient caseload. The average per patient cost we estimate for provider costs (approximately $26) is only about one fourth of one percent of the average hospital cost per stay (approximately $10,000). On July 19, 2010, the Department of the Treasury, Department of Labor, and Department of Health and Human Services, published a rule in the **Federal Register** (75 FR 41726) entitled, "Interim Final Rules for Group Health Plans and Health Insurance Issuers Relating to Coverage of Preventive Services Under the Patient Protection and Affordable Care Act," which mandated that health plans in the individual and group health insurance markets cover a number of preventive services, including influenza vaccination, at no copayment or coinsurance cost to patients. In practice, this means that these plans must pay providers and suppliers for providing such vaccinations. We also have information that in the group health market virtually all health plans already paid providers and suppliers for influenza vaccination (John Hunsaker *et al.,* "Health Insurance Plans and Immunization: Assessment of Practices and Policies, 2005 through 2008," *Pediatrics,* V. 124, December 2009). In general, insurance payments to providers and suppliers approximate the cost of vaccination and may in many situations, such as those addressed by this proposed rule, be higher.

As a result, we do not believe that this rule would have a significant economic impact on a substantial number of small entities, and we certify that an Initial Regulatory Flexibility Analysis is not required. In the particular case of Federally qualified health centers, used by many uninsured patients, average per patient costs are only about $600 annually, and $26 represents about a 1 percent increase in patient costs assuming that one-fifth of all patients would be vaccinated above baseline levels (these centers are already encouraged and able to provide influenza vaccine to their patients). While this amount is substantial, it is not close to the 3 to 4 percent cost increase that HHS normally uses as the threshold of economic significance for RFA purposes if these providers had to absorb this cost. Both RHCs and FQHCs operate, moreover, under a reimbursement scheme called "All Inclusive Reimbursement Rate" (AIRR) under which Medicare and Medicaid pay for all covered services. Since vaccinations against influenza are covered under both programs, the AIRR rates should, over the period of time needed for adjustments, soon cover all costs of vaccination related to Medicare and Medicaid patients, who are about one half of the total caseload for these provider types. These conclusions would remain valid even if provider costs were twice as high as those we estimate (as discussed previously in the analysis, these costs are low compared to many estimates in the literature because all patients covered by this rule are already in provider facilities and we estimate only marginal costs). In summary, we believe that the proposed rule will have little or no consequential adverse impact on provider costs, net of insurance reimbursement. We further note that there will be little or no adverse impact on insurance companies, since they will recover any cost increases through minor rate adjustments, and the costs we estimate are negligible in proportion to industry revenues (further, we believe that few affected insurance firms are small entities as defined in the RFA). Ultimately, all of these costs will be borne by the workers or taxpayers who pay insurance premiums. We welcome comments on these estimates and conclusions.

In addition, section 1102(b) of the Act requires us to prepare a regulatory impact analysis if a rule may have a significant impact on the operations of a substantial number of small rural hospitals. This analysis must conform to the provisions of the RFA. For purposes of section 1102(b) of the Act, we define a small rural hospital as a hospital that is located outside of a Metropolitan Statistical Area and has fewer than 100 beds. We do not believe a regulatory impact analysis is required here because, for the reasons stated above, this proposed rule would not have a significant impact on the operations of a substantial number of small rural hospitals.

VIII. Unfunded Mandates Reform Act of 1995

Section 202 of the Unfunded Mandates Reform Act of 1995 (Pub. L. 104–4) requires that agencies assess anticipated costs and benefits before issuing any rule whose mandates require spending in any 1 year of $100 million in 1995 dollars, updated annually for inflation. That threshold level is currently approximately $136 million. This proposed rule would impose no mandates on State, local, or Tribal governments in the aggregate. It would, however, impose gross costs of approximately $330 million annually on affected providers and suppliers, largely offset by third party payments (including grants-in-aid), and would, therefore, approach this threshold. Because of Medicare and Medicaid coverage of influenza vaccines and vaccine administration cost, and the predominant coverage of these costs by private plans, a rough estimate would be that in the first year almost all vaccine costs and at least one half of all other costs—$240 million or more—would be reimbursed through third party payments, leaving a net cost impact on providers of approximately $90 million. In future years as payment benchmarks were adjusted we would expect provider costs to drop further. Accordingly, we do not believe that this proposed rule requires analysis under UMRA. Regardless, the analysis we have prepared meets the requirements of UMRA.

IX. Federalism

Executive Order 13132 on Federalism establishes certain requirements that an agency must meet when it publishes a proposed rule (and subsequent final rule) that imposes substantial direct requirement costs on State and local governments, preempts State law, or otherwise has Federalism implications. We have determined that this proposed rule would not significantly affect the rights, roles, or responsibilities of the States. This proposed rule would not impose substantial direct requirement costs on State or local governments,

preempt State law, or otherwise implicate federalism.

List of Subjects

42 CFR Part 482

Grant programs—health, Hospitals, Medicaid, Medicare, Reporting and recordkeeping requirements.

42 CFR Part 485

Grant programs—health, Health facilities, Medicaid, Medicare, Reporting and recordkeeping requirements.

42 CFR Part 491

Grant programs—health, Health facilities, Medicaid, Medicare Reporting and recordkeeping requirements, Rural areas.

42 CFR Part 494

Health facilities, Kidney diseases, Medicare, Reporting and recordkeeping requirements.

For the reasons set forth in the preamble, the Centers for Medicare & Medicaid Services proposes to amend 42 CFR chapter IV as set forth below:

PART 482—CONDITIONS OF PARTICIPATION FOR HOSPITALS

1. The authority citation for part 482 continues to read as follows:

Authority: Secs. 1102, 1871 and 1881 of the Social Security Act (42 U.S.C. 1302, 1395hh, and 1395rr), unless otherwise noted.

Subpart C—Basic Hospital Functions

2. In § 482.42, a new paragraph (c) is added to read as follows:

§ 482.42 Condition of participation: Infection control.

* * * * *

(c) *Standard: Influenza vaccinations.* (1) The hospital must develop and implement policies and procedures regarding administration of annual and pandemic influenza vaccinations. Pandemic procedures are to be implemented when a pandemic event is announced by the Secretary.

(2) The hospital's policies and procedures must take into account, and reflect reasonable consideration of, the recommendations in guidelines established by nationally recognized organizations (including, but not limited to, guidelines addressing patients for whom vaccination may be prioritized or temporarily contraindicated).

(3) Within its policies and procedures, the hospital must ensure all of the following, subject to the reasonable availability of vaccine and where appropriate taking into account the condition of particular patients:

(i) Before receiving the influenza vaccination, each patient, or, where appropriate, the patient's representative or surrogate (as allowed under State law), receives education regarding the benefits, risks, and potential side effects of the vaccine.

(ii) Each patient is offered an influenza vaccination annually, from the time the vaccine is available on or after September 1 through the end of February of the following year, except when such vaccination is medically contraindicated or when the patient has already been vaccinated during this time period.

(iii) The patient, or, where appropriate, the patient's representative or surrogate, has the opportunity to decline vaccination.

(iv) The patient's health record includes documentation that indicates, at a minimum, the following:

(A) The date the patient, or the patient's representative or surrogate, was provided education regarding the benefits, risks, and potential side effects of influenza vaccination.

(B) The date the patient either received the influenza vaccination or did not receive the influenza vaccination due to medical contraindications, previous influenza vaccination during the time period, or patient refusal.

PART 485—CONDITIONS OF PARTICIPATION: SPECIALIZED PROVIDERS

3. The authority citation for part 485 continues to read as follows:

Authority: Secs. 1102 and 1871 of the Social Security Act (42 U.S.C. 1302 and 1395(hh)).

Subpart F—Conditions of Participation—Critical Access Hospitals (CAHs)

4. Section 485.635 is amended by—

A. Redesignating paragraphs (b) through (f) as paragraphs (c) through (g), respectively.

B. Adding a new paragraph (b).

The revisions and additions read as follows:

§ 485.635 Condition of participation: Provision of services.

* * * * *

(b) *Standard: Influenza vaccinations.* (1) The CAH must develop and implement policies and procedures regarding administration of annual and pandemic influenza vaccinations. Pandemic procedures are to be implemented when a pandemic event is announced by the Secretary.

(2) The CAH's policies and procedures must take into account, and reflect reasonable consideration of, the recommendations in guidelines established by nationally recognized organizations (including, but not limited to, guidelines addressing patients for whom vaccination may be prioritized or temporarily contraindicated).

(3) Within its policies and procedures, the CAH must ensure all of the following, subject to the reasonable availability of vaccine and where appropriate taking into account the condition of particular patients:

(i) Before receiving the influenza vaccination, each patient, or, where appropriate, the patient's representative or surrogate (as allowed under State law), receives education regarding the benefits, risks, and potential side effects of the vaccine.

(ii) Each patient is offered an influenza vaccination annually, from the time the vaccine is available on or after September 1 through the end of February of the following year, except when such vaccination is medically contraindicated or when the patient has already been vaccinated during this time period.

(iii) The date the patient, or, where appropriate, the patient's representative or surrogate, has the opportunity to decline vaccination.

(iv) The patient's health record includes documentation that indicates, at a minimum, the following:

(A) The date the patient, or the patient's representative or surrogate, was provided education regarding the benefits, risks, and potential side effects of influenza vaccination.

(B) The date the patient either received the influenza vaccination or did not receive the influenza vaccination due to medical contraindications, previous influenza vaccination during the time period, or patient refusal.

* * * * *

PART 491—CERTIFICATION OF CERTAIN HEALTH FACILITIES

5. The authority citation for part 491 continues to read as follows:

Authority: Sec. 1102 of the Social Security Act (42 U.S.C. 1302); and sec. 353 of the Public Health Service Act (42 U.S.C. 263a).

Subpart A—Rural Health Clinics: Conditions for Certification; and FQHC Conditions for Coverage

6. Section 491.9 is amended by—

A. Redesignating paragraph (d) as paragraph (e).

B. Adding a new paragraph (d).

The revisions and additions read as follows:

§ 491.9 Provision of services.

* * * * *

(d) *Standard: Influenza vaccinations.* (1) The clinic or center must develop and implement policies and procedures regarding administration of annual and pandemic influenza vaccination. Pandemic procedures are implemented when a pandemic event is announced by the Secretary.

(2) The clinic or center's policies and procedures must take into account, and reflect reasonable consideration of, the recommendations in guidelines established by nationally recognized organizations (including, but not limited to, guidelines addressing patients for whom vaccination may be prioritized or temporarily contraindicated).

(3) Within its policies and procedures, the clinic or center must ensure all of the following, subject to the reasonable availability of vaccine and where appropriate taking into account the condition of particular patients:

(i) Before receiving the influenza vaccination, each patient, or, where appropriate, the patient's representative or surrogate (as allowed under State law), receives education regarding the benefits, risks, and potential side effects of the vaccine.

(ii) Each patient is offered an influenza vaccination annually, from the time the vaccine is available on or after September 1 through the end of February of the following year, except when such vaccination is medically contraindicated or when the patient has already been vaccinated during this time period.

(iii) The patient, or, where appropriate, the patient's representative or surrogate, has the opportunity to decline vaccination.

(iv) The patient's health record includes documentation that indicates, at a minimum, the following:

(A) The date the patient, or the patient's representative or surrogate, was provided education regarding the benefits, risks, and potential side effects of influenza vaccination; and

(B) The date the patient either received the influenza vaccination or did not receive the influenza vaccination due to medical contraindications, previous influenza vaccination during the time period, or patient refusal.

* * * * *

PART 494—CONDITIONS FOR COVERAGE FOR END-STAGE RENAL DISEASE FACILITIES

7. The authority citation for part 494 continues to read as follows:

Authority: Secs. 1102 and 1871 of the Social Security Act (42 U.S.C. 1302 and 1395hh).

Subpart B—Patient Safety

8. Section 494.30 is amended by adding a new paragraph (d) to read as follows:

§ 494.30 Condition: Infection control.

* * * * *

(d) *Standard: Influenza vaccinations.* (1) The ESRD facility must develop and implement policies and procedures regarding administration of annual and pandemic influenza vaccinations. Pandemic procedures are implemented when a pandemic event is announced by the Secretary.

(2) The ESRD facility's policies and procedures must take into account, and reflect reasonable consideration of, the recommendations in guidelines established by nationally recognized organizations (including, but not limited to, guidelines addressing patients for whom vaccination may be prioritized or temporarily contraindicated).

(3) Within its policies and procedures, the ESRD facility must ensure all of the following, subject to the reasonable availability of vaccine and where appropriate taking into account the condition of particular patients:

(i) Before receiving the influenza vaccination, each patient, or, where appropriate, the patient's representative or surrogate (as allowed under State law), receives education regarding the benefits, risks, and potential side effects of the vaccine.

(ii) Each patient is offered an influenza vaccination annually, from the time the vaccine is available on or after September 1 through the end of February of the following year, except when such vaccination is medically contraindicated or when the patient has already been vaccinated during this time period.

(iii) The patient, or, where appropriate, the patient's representative or surrogate, has the opportunity to decline vaccination.

(iv) The patient's health record includes documentation that indicates, at a minimum, the following:

(A) The date the patient, or the patient's representative or surrogate, was provided education regarding the benefits, risks, and potential side effects of influenza vaccination; and

(B) The date the patient either received the influenza vaccination or did not receive the influenza vaccination due to medical contraindications, previous influenza vaccination during the time period, or patient refusal.

(Catalog of Federal Domestic Assistance Program No. 93.773, Medicare—Hospital Insurance; and Program No. 93.774, Medicare—Supplementary Medical Insurance Program.) (Catalog of Federal Domestic Assistance Program No. 93.773, Medical Assistance Program.)

Dated: September 3, 2010.

Donald M. Berwick,

Administrator, Centers for Medicare & Medicaid Services.

Approved: February 25, 2011.

Kathleen Sebelius,

Secretary.

Editorial Note: This document was received in the Office of the Federal Register on April 27, 2011.

[FR Doc. 2011–10646 Filed 4–29–11; 11:15 am]

BILLING CODE 4120–01–P

FEDERAL REGISTER

Vol. 76 Wednesday,

No. 86 May 4, 2011

Part IV

Department of Commerce

National Oceanic and Atmospheric Administration

50 CFR Part 218

Taking and Importing Marine Mammals; Military Training Activities Conducted Within the Gulf of Alaska Temporary Maritime Activities Area; Final Rule

DEPARTMENT OF COMMERCE

National Oceanic and Atmospheric Administration

50 CFR Part 218

[Docket No. 100817363–1137–02]

RIN 0648–BA14

Taking and Importing Marine Mammals; Military Training Activities Conducted Within the Gulf of Alaska Temporary Maritime Activities Area

AGENCY: National Marine Fisheries Service (NMFS), National Oceanic and Atmospheric Administration (NOAA), Commerce.

ACTION: Final rule.

SUMMARY: NMFS, upon application from the U.S. Navy (Navy), issues regulations to govern the unintentional taking of marine mammals incidental to training activities conducted in the Gulf of Alaska (GoA) Temporary Maritime Activities Area (TMAA) for the period April 2011 through April 2016. The Navy's activities are considered military readiness activities pursuant to the Marine Mammal Protection Act (MMPA), as amended by the National Defense Authorization Act for Fiscal Year 2004 (NDAA). These regulations, which allow for the issuance of "Letters of Authorization" (LOAs) for the incidental take of marine mammals during the described activities and specified timeframes, prescribe the permissible methods of taking and other means of effecting the least practicable adverse impact on marine mammal species or stocks and their habitat, as well as requirements pertaining to the monitoring and reporting of such taking.

DATES: Effective May 4, 2011 through May 4, 2016.

ADDRESSES: A copy of the Navy's application (which contains a list of references used in this document), NMFS' Record of Decision (ROD), and other documents cited herein may be obtained by writing to Michael Payne, Chief, Permits, Conservation and Education Division, Office of Protected Resources, National Marine Fisheries Service, 1315 East-West Highway, Silver Spring, MD 20910–3225 or by telephone via the contact listed here (see **FOR FURTHER INFORMATION CONTACT**).

FOR FURTHER INFORMATION CONTACT: Jolie Harrison, Brian D. Hopper, or Michelle Magliocca, Office of Protected Resources, NMFS, (301) 713–2289.

SUPPLEMENTARY INFORMATION:

Availability of Supporting Information

Extensive **SUPPLEMENTARY INFORMATION** was provided in the proposed rule for this activity, which was published in the **Federal Register** on Tuesday, October 19, 2010 (75 FR 64508). This information will not be reprinted here in its entirety; rather, all sections from the proposed rule will be represented herein and will contain either a summary of the material presented in the proposed rule or a note referencing the page(s) in the proposed rule where the information may be found.

Background

Sections 101(a)(5)(A) and (D) of the MMPA (16 U.S.C. 1361 *et seq.*) direct the Secretary of Commerce (Secretary) to allow, upon request, the incidental, but not intentional taking of marine mammals by U.S. citizens who engage in a specified activity (other than commercial fishing) during periods of not more than five consecutive years each if certain findings are made and regulations are issued or, if the taking is limited to harassment, notice of a proposed authorization is provided to the public for review.

Authorization shall be granted if NMFS finds that the taking will have a negligible impact on the species or stock(s), will not have an unmitigable adverse impact on the availability of the species or stock(s) for subsistence uses, and if the permissible methods of taking and requirements pertaining to the mitigation, monitoring and reporting of such taking are set forth.

NMFS has defined "negligible impact" in 50 CFR 216.103 as: "an impact resulting from the specified activity that cannot be reasonably expected to, and is not reasonably likely to, adversely affect the species or stock through effects on annual rates of recruitment or survival."

The National Defense Authorization Act of 2004 (NDAA) (Public Law 108–136) modified the MMPA by removing the "small numbers" and "specified geographical region" limitations and amended the definition of "harassment" as it applies to a "military readiness activity" to read as follows (Section 3(18)(B) of the MMPA): "any act that injures or has the significant potential to injure a marine mammal or marine mammal stock in the wild [Level A Harassment]; or any act that disturbs or is likely to disturb a marine mammal or marine mammal stock in the wild by causing disruption of natural behavioral patterns, including, but not limited to, migration, surfacing, nursing, breeding, feeding, or sheltering, to a point where such behavioral patterns are abandoned or significantly altered [Level B Harassment].

Summary of Request

In March 2009, NMFS received an application from the Navy requesting authorization to take individuals of 20 species of marine mammals (15 cetaceans and 5 pinnipeds) incidental to upcoming training activities to be conducted from April 2011 through April 2016 in the GoA TMAA, which is a 42,146 square nautical mile (nm^2) (145,482 km^2) polygon roughly the shape of a 300 nm (555.6 km) by 150 nm (277.8 km) rectangle oriented northwest to southeast in the long direction. NMFS subsequently requested additional information, which was provided in November 2009 in the form of a revised application. These training activities are classified as military readiness activities under the provisions of the NDAA of 2004. These military readiness activities may incidentally take marine mammals within the TMAA by exposing them to sound from mid-frequency or high-frequency active sonar (MFAS/HFAS) or underwater detonations. The Navy requested authorization to take individuals of 20 species of cetaceans and pinnipeds by Level B Harassment. Further, although it is neither anticipated to occur, nor does the Navy's model factor in any potential benefits from the implementation of mitigation measures, the Navy still requested authorization to take, by injury or mortality, up to 15 individual beaked whales (of any of the following species as a conservative (*i.e.,* overestimation) measure: Baird's beaked whale, Cuvier's beaked whale, Stejneger's beaked whale) over the course of the 5-year regulations.

Background of Request

The proposed rule contains a description of the Navy's mission, their responsibilities pursuant to Title 10 of the United States Code, and the specific purpose and need for the activities for which they requested incidental take authorization. The description contained in the proposed rule has not changed (75 FR 64508). The Navy plans to conduct up to two, 21-day training exercises (composed of smaller exercise components) per year between the months of April and October in the Gulf of Alaska.

Overview of the GoA TMAA

The proposed rule contains a description of the GoA TMAA. The description contained in the proposed rule has not changed (75 FR 64508). The GoA TMAA is a roughly rectangular area approximately 300 nm (555.6 km)

long by 150 nm (277.8 km) wide (42,146 nm^2 (145,482 km^2)), situated south of Prince William Sound and east of Kodiak Island.

Specified Activities

The proposed rule contains a complete description of the Navy's specified activities that are covered by these final regulations, and for which the associated incidental take of marine mammals will be authorized in the related LOAs. The proposed rule describes the nature and number of anti-submarine warfare (ASW) exercises and anti-surface warfare (ASUW) exercises involving both mid- and high-frequency active sonar (MFAS and HFAS), as well as explosive detonations. It also describes the sound sources and explosive types used (75 FR 64508, pages 64509–64518). The narrative description of the action contained in the proposed rule has not changed. Tables 1, 2, and 3 list the types of sonar sources and the estimated yearly use, summarize the characteristics of the exercise types, and list the explosive types used. One acoustic source mentioned in the text of the proposed rule, the MK–39 EMATT target, was not included in Table 1 in the proposed rule due to an oversight. It has been added to Table 1 in this final rule. Also, Table 1 in the proposed rule contained an error in the number of AN/SSQ–110A (IEER) sonobuoys. The Navy proposes to use 80 of these sonobuoys annually, which has been corrected in Table 1 in this final rule.

The Navy has carefully characterized the training activities planned for the GoA TMAA over the 5 years covered by these regulations; however, evolving real-world needs necessitate flexibility in both the types and amounts of sound sources used in annual activities. In the proposed rule, NMFS included regulatory text (see § 218.122(c)) allowing for inter-annual flexibility in the amount of use of specific sound and explosive sources, provided it does not affect the take estimates and anticipated impacts in a manner that changes our analysis. However, additional minor changes to the text are needed to address flexibility in the types of sources.

In some cases, the proposed rule identified the most representative or highest power source to represent a group of known similar sources. Additionally, the Navy regularly modifies or develops new technology, often in the way of sound sources that are similar to, but not exactly the same as, other sources. In this refinement to the final rule's regulatory text (§ 218.120 (c)(1) & (2)), we increase flexibility by inserting language that will allow for authorization of take incidental to the previously identified specified sources or to "similar sources," provided that the implementation of these changes in annual or biennial LOAs does not result in exceeding the incidental take analyzed and identified in the final rule.

BILLING CODE 3510–22–P

Sonar Sources	Frequency (kHz)	Source Level (dB) re 1 μPa @ 1 m	Emission Spacing (m)*	Vertical Directivity	Horizontal Directivity	Associated Platform	System Description	Annual Amount	Unit
AN/SQS-53	3.5	235	154	Omni	240° forward-looking	Cruiser (CG) and Destroyer (DDG) hull mounted sonar	ASW search, detection, & localization (approximately 120 pings per hour)	578	Hours
AN/SQS-56	7.5	225	129	13°	30°	Frigate (FFG) hullmounted sonar	ASW search, detection, & localization (approximately 120 pings per hour)	52	Hours
AN/AQS-13/22	Classifed (MF)	Classified	15	Omni	Omni	Helicopter Dipping sonar	ASW search, detection, & localization (10 pings/dip, 30 seconds between pings), also used to represent AN/AQS-13	192	Hours
AN/BQQ-10	Classifed (MF)	Classified	Classified	Classified	Classified	Submarine hull-mounted sonar	ASW search and attack (approximately one ping per two hours when in use)	48	Hours
BQS-15 or BQQ-24	Classified (HF)	Classified	Classified	Classified	Classified	Submarine hull-mounted sonar	20 pings per hours for 4 hours	24	Hours
AN/SSQ-62 DICASS (sonobuoy, tonal)	8	201	450	Omni	Omni	Helicopter and maritime patrol aircraft (P3 and P8 MPA) dropped sonobuoy	Remotely commanded expendable sonar-equipped buoy (approximately 12 pings per use, 30 secs between pings, 8 buoys per hour)	266	Buoys
MK-48 torpedo sonar	Classified (>10)	Classified	144	Omni	Omni	Submarine (SSN) launched torpedo (used during SINKEX)	Recoverable and non-explosive exercise torpedo; sonar is active approximately 15 min per torpedo run	2	Torpedoes
AN/SSQ-110A (IEER)	Classified (impulsive, broadband)	Classified	n/a	Omni	Omni	MPA deployed	ASW system consists of explosive acoustic source buoy (contains two 5 lb charges) and expendable passive receiver sonobuoy	80	Buoys
AN/SSQ-125 (MAC)	1	Classified	15	Omni	Omni	MPA deployed	AN/SSQ-110A replacement. ASW system consists of active sonobuoy and expendable passive receiver sonobuoy. Phased introduction beginning in 2011.	Included in IEER above	Buoys
MK-84 Range Pingers	12.9 or 37 (rare)	194	Ping dur. 15 msec / ping every 2 sec	90°	Omni	Ships, submarines, weapons, targets, and UUV (8-10 knot platform)	4 pingers maxused during a PUTR TRACKEX exercise. Surface ship pingers are at 7 m depth / target or sub pingers at 100 m depth. 8 hours total event duration each during PUTR operational days.	80	Hours
SUS MK-84	Selectable at 3.3 or 3.5	160	Continuous	Omni	Omni	Sonobuoy	Expendable buoy deployed from aircraft and ships used as a signaling device to communicate with submarines. Operating life of 70 seconds.	24	Buoys
PUTR Transponder	8.8 or 40	186 or 190	n/a		180 upward looking	Portable Undersea Tracking Range, deployed on ocean floor	2 pingers used 8 hrs per event. One ping every 2 seconds.	80	Hours

Table 1. Active sonar sources in the GOA and parameters used for modeling them. Many of the actual parameters and capabilities of these sonars are classified. Parameters used for modeling were derived to be as representative as possible. When, however, there were a wide range of potential modeling values, a nominal parameter likely to result in the most impact was used so that the model would err towards overestimation.

*Spacing means distance between pings at the nominal speed

CG – Guided Missile Cruiser; DDG – Guided Missile Destroyer; DICASS – Directional Command-Activated Sonobuoy System; FFG – Fast Frigate; HF – High-Frequency; MF – Mid-Frequency; MPA - Maritime Patrol Aircraft; UUV - Unmanned Underwater Vehicle.

EXERCISE TYPE	SINKEX	EER/IEER/MAC	RANGE OPERATIONS (PUTR)	BOMBEX [A-S]	GUNEX [A-S, S–S, S-A]	MISSILEX [A-A, S-A]	ASW Helicopter or MPA	ASW Surface	ASW Submarine
Sources / Weapons / Rounds	MK-48 MK-82 (Inert/HE) MK-83 (HE) AGM-88 HARM AGM-84 Harpoon AGM-65 Maverick AGM-114 Hellfire AGM-119 Penguin Standard Missile 1 Standard Missile 2 5"/54 BLP (Inert)	SSQ-110A (5 lb NEW) SSQ-125	MK-84 pingers	MK 82/83/84 BDU-45	5" (Inert/HE) 76mm (Inert/HE 57mm (Inert) 25mm (Inert) 20mm (Inert) 7.62mm (inert) .50 cal (inert)	Standard missle Sea Sparrow RAM AIM-7/9/120	AN/SSQ-62 DICASS AN/ASQ-22	AN/SQS-53 MFA Sonar AN/SQS-56 MFA Sonar MK-39 EMATT	BQQ-10 Submarine Sonar BQS-15 Submarine sonar SUS MK-84 Sonobuoy
Explosion in or on water	Yes	Yes - SSQ-110A No - SSQ-125	No	Yes	Yes	No	No	No	No
Length of Exercise	4-8 hrs over 2 days	6 hrs	4 hrs	1 hr	2-3 hrs	1 hr	2-4hrs	5-7 days	2-3 days
Detonations / hours/ rounds / sonobuoy or torpedo deployments, or helicopter sonar dips per exercise or year	MK-82 (Inert) = 3 MK-82 (HE) = 7 MK-83 (HE) = 4 AGM-88 HARM = 2 AGM-84 Harpoon = 5 AGM-65 Maverick = 3 AGM-114 Hellfire = 1 AGM-119 Penguin = 1 Standard Missile 1 = 1 Standard Missile 2 = 1 5"/54 BLP = 500 rounds	80 deploy/yr	MK-84 pingers = 80hrs	MK-82 (HE) = 128 MK-83 (HE) = 12 MK-84 = 4 (1 HE) BDU-45 (inert) = 216	5" (Inert) = 48 5" (HE) = 84 76mm (Inert) = 16 76mm (HE) = 28 57mm (Inert) = 200 25mm (Inert) = 6,000 20mm (Inert) = 20,000 7.62mm (inert) = 9,000 .50 cal (inert) = 2,400	**S-A** Standard missle, Sea Sparrow, RAM = 6 **A-A** AIM-7 = 18 AIM-9 = 24 AIM-120 = 18	AN/SSQ-62 DICASS AN/ASQ-22 = 192	AN/SQS-53 = 578hrs AN/SQS-56 = 52 MK-39 EMATT = 12hrs	BQQ-10 = 48hrs BQS-15 =24hrs SUS MK-84 = 24
Number Exercises per Year	2	4	20	36	32	6	44	3	3
Area Used	TMAA	TMAA	TMAA	TMAA	TMAA	TMAA	TMAA	TMAA	TMAA
Months of Yr	April - October	April - October	April - October	April - October	April - October	April - October	April - October	April - October	April - October

Table 2. Summary of Navy training activities in GoA TMAA and associated componets.

BILLING CODE 3510–22–C

Description of Marine Mammals in the Area of the Specified Activities

Twenty-six marine mammal species or populations/stocks have confirmed or possible occurrence within or adjacent to the GoA, including seven species of baleen whales (mysticetes), 13 species of toothed whales (odontocetes), five species of seals (pinnipeds), and the sea otter (mustelid). Nine of these species are ESA-listed and considered depleted under the MMPA: blue whale, fin whale, humpback whale, sei whale, sperm whale, North Pacific right whale, Cook Inlet beluga whale, Steller sea lion, and sea otter. Table 4 summarizes their abundance, Endangered Species Act (ESA) status, occurrence, density, and likely occurrence in the TMAA during the April to October timeframe. The sea otter is managed by the U.S. Fish and Wildlife Service and will not be addressed further here. The proposed rule contains a discussion of five species (Cook Inlet beluga whale, false killer whale, northern right whale dolphin, Risso's dolphin, and short-finned pilot whale) that are not considered further in the analysis because of their rarity in the GoA TMAA and therefore are unlikely to be impacted by the training. The proposed rule contains a discussion of important areas, including North Pacific right whale and Steller sea lion critical habitat, and feeding habitats for marine mammals in the GoA. The proposed rule also includes a discussion of marine mammal vocalizations. Finally, the proposed rule includes a discussion of the methods used to estimate marine mammal density in the GoA TMAA. The Description of Marine Mammals in the Area of Specified Activities section has not changed from what was in the proposed rule (75 FR 64508, pages 64518–64524).

BILLING CODE 3510–22–P

Ordnance/Explosive	Net Explosive Weight	Sub-TTS	TTS	Injury	Mortality	Exclusion Zone Used (m)
		177dB	182 SEL / 23psi	50% TM rupture, 205db or 23 psi-ms	Onset massive lung injury or 31 psi-ms	
5" Naval gunfire	**9.54 lbs**	413	227/269	43	23	549
76 mm Rounds	**1.6 lbs**	168	95/150	19	13	549
MK-82	**238 lbs**	2720	1584/809	302	153	914
MK-83	**574 lbs**	4056	2374/1102	468	195	914
MK-84	**945 lbs**	5196	3050/1327	611	226	914
SSQ-110 IEER	**5 lbs**	NA	325/271	155	76	914
MK-48	**851 lbs**	NA	2588/1198	762	442	1852

Table 3. Sources of at-sea explosives used in GoA TMAA for which take of marine mammals is anticipated. Table also indicates range to indicated threshold and size of Navy exclusion zone used in mitigation. **Units are meters.**

Common Name	Species Name	ESA/ MMPA Status	Occurrence Apr-Dec	Abundance	Density* /km^2
Mysticetes					
Blue whale	*Balaenoptera musculus*	E, D, S	Rare	1,368	NA
Fin whale	*Balaenoptera physalus*	E, D, S	Common	2,636	0.01
Sei whale	*Balaenoptera borealis*	E, D, S	Rare	43	NA
Minke whale	*Balaenoptera acutorostrata*		Rare	Unknown	0.0006
Humpback whale	*Megaptera novaeangliae*	E, D, S	Common	4,005	0.0019
Gray whale	*Eschrichtius robustus*		Common	18,813	0.0125
North Pacific right whale	*Eubalaena japonica*	E, D, S	Rare	Unknown (<100)	NA
Odontocetes					
Sperm whale	*Physeter macrocephalus*	E, D, S	Rare	Unknown	0.0003
Baird's beaked whale	*Berardius bairdii*		Rare	Unknown	0.0005
Cook Inlet beluga whale	*Delphinaptera leucas*	E, D, S	Extra-limital	375	NA
Cuvier's beaked whale	*Ziphius cavirostris*		Common	Unknown	0.0022
Dall's porpoise	*Phocoenoides dalii*		Common	83,400	0.1892
False killer whale	*Pseudorca crassidens*		Extra-limital	Unknown	NA
Killer whale (multiple stocks)	*Orcinus orca*		Common	249-1,123	0.01
Pacific white-sided dolphin	*Lagenorhynchus obliguidens*		Common	26,880	0.0208
Risso's dolphin	*Grampus griseus*		Extra-limital	11,621	NA
Short-finned pilot whale	*Globicephala macrorhynchus*		Extra-limital	245	NA
Harbor porpoise	*Phocoena phocoena*		Rare	41,854	NA
Northern right whale dolphin	*Lissodelphis borealis*		Extra-limital	12,876	NA
Stejneger's beaked whale	*Mesoplodon stejnegeri*		Common	Unknown	.0022**
Pinniped					
Stellar sea lion (eastern stock)	*Eumetopias jubatus*	T, D, S	Common	45,095-55,832	0.0098
Stellar sea lion (western stock)	*Eumetopias jubatus*	E, D, S	Common	38,988	0.0098
California sea lion	*Zalophus californianus*		Rare	238,000	NA
Harbor seal	*Phoca vitulina richardii*		Rare	45,975	NA
Northern elephant seal	*Mirounga angustirostris*		Common	124,000	0.0022
Northern fur seal	*Callorhinus ursinus*	D, S	Common	665,500	0.118
Mustelid					
Sea otter	*Enhydra lutris*	T, S	Extra-limital	Unknown	NA

Table 4. Marine Mammals of known or possible occurrence in GOA. Table includes status, ocurrence, and density.

* Density derived for summer (appendix B)

** Cuvier's beaked whale density used as surrogate

BILLING CODE 3510–22–C

Brief Background on Sound

The proposed rule contains a section that provides a brief background on the principles of sound that are frequently referred to in this rulemaking (75 FR 64508, pages 64524–64526). This section also includes a discussion of the functional hearing ranges of the different groups of marine mammals (by frequency) as well as a discussion of the two main sound metrics used in NMFS' analysis (sound pressure level (SPL) and sound energy level (SEL)). The information contained in the proposed rule has not changed.

Potential Effects of Specified Activities on Marine Mammals

With respect to the MMPA, NMFS' effects assessment serves four primary purposes: (1) To prescribe the permissible methods of taking (*i.e.,* Level B Harassment (behavioral harassment), Level A Harassment (injury), or mortality, including an identification of the number and types of take that could occur by Level A or Level B Harassment or mortality) and to prescribe other means of effecting the least practicable adverse impact on such species or stock and its habitat (*i.e.,* mitigation); (2) to determine whether the specified activity will have a negligible impact on the affected species or stocks of marine mammals (based on the likelihood that the activity will adversely affect the species or stock through effects on annual rates of recruitment or survival); (3) to determine whether the specified activity will have an unmitigable adverse impact on the availability of the species or stock(s) for subsistence uses; and (4) to prescribe requirements pertaining to monitoring and reporting.

In the Potential Effects of Specified Activities on Marine Mammals section of the proposed rule, NMFS included a

qualitative discussion of the different ways that MFAS/HFAS and underwater explosive detonations may potentially affect marine mammals (some of which NMFS would not classify as harassment), as well as a discussion of the potential effects of vessel movement and collision (75 FR 64508, pages 64526–64542). Marine mammals may experience direct physiological effects (such as threshold shift), acoustic masking, impaired communications, stress responses, and behavioral disturbance. This section also included a discussion of some of the suggested explanations for the association between the use of MFAS and marine mammal strandings (such as behaviorally-mediated bubble growth) that have been observed a limited number of times in certain circumstances (the specific events are also described) (75 FR 64508, pages 64535–64542). The information contained in the Potential Effects of Specified Activities on Marine Mammals section from the proposed rule has not changed.

Later, in the Estimated Take of Marine Mammals section, NMFS relates and quantifies the potential effects to marine mammals from MFAS/HFAS and underwater detonations of explosives discussed here to the MMPA definitions of Level A and Level B Harassment.

Mitigation

In order to issue an incidental take authorization (ITA) under section 101(a)(5)(A) of the MMPA, NMFS must set forth the "permissible methods of taking pursuant to such activity, and other means of effecting the least practicable adverse impact on such species or stock and its habitat, paying particular attention to rookeries, mating grounds, and areas of similar significance." The NDAA of 2004 amended the MMPA as it relates to military-readiness activities and the ITA process such that "least practicable adverse impact" shall include consideration of personnel safety, practicality of implementation, and impact on the effectiveness of the "military readiness activity." The training activities described in the GoA TMAA application are considered military readiness activities.

NMFS reviewed the proposed GoA TMAA activities and the proposed GoA TMAA mitigation measures as described in the Navy's LOA application to determine if they would result in the least practicable adverse effect on marine mammals. This included a careful balancing of the likely benefit of any particular measure to the marine mammals against the likely effect of that measure on personnel safety, practicality of implementation, and impact on the effectiveness of the "military-readiness activity." NMFS identified the need to further amplify the Navy's plan for how to respond in the event of a stranding in the GoA, and the Navy and NMFS subsequently coordinated and produced the draft Stranding Response Plan for the GoA, which was made available to the public at the NMFS' Web site: *http://www.nmfs.noaa.gov/pr/permits/incidental.htm#applications*.

NMFS' proposed rule includes a list of the Navy's proposed mitigation measures (75 FR 64508, pages 64542–64548), which have been included in the regulatory text of this document.

Based on our evaluation of the proposed measures and other measures considered by NMFS or recommended by the public, NMFS has determined that the required mitigation measures (including the Adaptive Management component, see below) provide adequate means of effecting the least practicable adverse impact on marine mammal species or stocks and their habitat, paying particular attention to rookeries, mating grounds, and areas of similar significance, while also considering personnel safety, practicality of implementation, and impact on the effectiveness of the military readiness activity. The proposed rule contains further support for this finding in the Mitigation Conclusion section (75 FR 64508, pages 64546–64548). During the public comment period, a few mitigation measures not previously considered were recommended, and NMFS' analysis of these measures is included in the Response to Public Comments section.

Research

The Navy provides a significant amount of funding and support to marine research. In the past five years, the agency funded over $100 million ($26 million in Fiscal Year 08 alone) to universities, research institutions, Federal laboratories, private companies, and independent researchers around the world to study marine mammals. The U.S. Navy sponsors 70 percent of all U.S. research concerning the effects of human-generated sound on marine mammals and 50 percent of such research conducted worldwide. Major topics of Navy-supported research include the following:

- Better understanding of marine species distribution and important habitat areas;
- Developing methods to detect and monitor marine species before and during training;
- Understanding the effects of sound on marine mammals, sea turtles, fish, and birds; and
- Developing tools to model and estimate potential effects of sound.

This research is directly applicable to fleet training activities, particularly with respect to the investigations of the potential effects of underwater noise sources on marine mammals and other protected species. Proposed training activities employ active sonar and underwater explosives, which introduce sound into the marine environment.

The Marine Life Sciences Division of the Office of Naval Research currently coordinates six programs that examine the marine environment and are devoted solely to studying the effects of noise and/or the implementation of technology tools that will assist the Navy in studying and tracking marine mammals. The six programs are as follows:

- Environmental Consequences of Underwater Sound
- Non-Auditory Biological Effects of Sound on Marine Mammals
- Effects of Sound on the Marine Environment
- Sensors and Models for Marine Environmental Monitoring
- Effects of Sound on Hearing of Marine Animals
- Passive Acoustic Detection, Classification, and Tracking of Marine Mammals

The Navy has also developed the technical reports referenced within this document, which include the Marine Resource Assessment. Furthermore, research cruises by NMFS and by academic institutions have received funding from the U.S. Navy. For example, in April 2009, the U.S. Pacific Fleet contributed approximately $250,000 to support a NMFS marine mammal density survey of the GoA's offshore waters. The goal of this study was to increase the state of awareness on marine mammal occurrence, density, and distribution within the GoA. The Navy-funded vessel-based line-transect survey conducted from onboard the NOAA ship *Oscar Dyson* determined marine mammal species distribution and abundance in the GoA TMAA. The survey cruise employed multiple observation techniques, including visual and passive acoustic observations, as well as photographic identifications (Rone *et al.,* 2009). In addition to the U.S. Pacific Fleet-funded monitoring initiative, the Chief of Naval Operations Environmental Readiness Division and the Office of Naval Research have developed a coordinated Science & Technology and Research & Development program focused on

marine mammals and sound. Total Investment in this program between 2004 and 2008 was $100 million. Fiscal Year 09 funding was $22 million and continued funding at levels greater than $14 million is foreseen in subsequent years (beyond 2010).

The Navy has sponsored several workshops to evaluate the current state of knowledge and potential for future acoustic monitoring of marine mammals. The workshops brought together acoustic experts and marine biologists from the Navy and other research organizations to present data and information on current acoustic monitoring research efforts, and to evaluate the potential for incorporating similar technology and methods on instrumented ranges. However, acoustic detection, identification, localization, and tracking of individual animals still requires a significant amount of research effort to be considered a reliable method for marine mammal monitoring. The Navy supports research efforts on acoustic monitoring and will continue to investigate the feasibility of passive acoustics as a potential mitigation and monitoring tool.

Overall, the Navy will continue to fund marine mammal research, and is planning to coordinate long-term monitoring/studies of marine mammals on various established ranges and operating areas. The Navy will continue to research and contribute to university/external research to improve the state of the science regarding marine species biology and acoustic effects. These efforts include mitigation and monitoring programs; data sharing with NMFS and via the literature for research and development efforts; and future research as described previously.

Monitoring

Section 101(a)(5)(A) of the MMPA states that, in order to issue an ITA for an activity, NMFS must set forth "requirements pertaining to the monitoring and reporting of such taking." The MMPA implementing regulations at 50 CFR 216.104 (a)(13) indicate that requests for LOAs must include the suggested means of accomplishing the necessary monitoring and reporting that will result in increased knowledge of the species and of the level of taking or impacts on populations of marine mammals that are expected to be present.

Proposed Monitoring Plan for the GoA TMAA

The Navy submitted a draft Monitoring Plan for the GoA TMAA which may be viewed at NMFS' Web site: *http://www.nmfs.noaa.gov/pr/permits/incidental.htm#applications.*

Navy Monitoring Plans are typically designed as a collection of focused "studies" to gather data that will allow the Navy to address one or more of the following questions:

(a) Are marine mammals exposed to MFAS/HFAS (1–10 kHz), especially at levels associated with adverse effects (*i.e.,* based on NMFS' criteria for behavioral harassment, TTS, or PTS)? If so, at what levels are they exposed?

(b) If marine mammals are exposed to MFAS/HFAS, do they redistribute geographically as a result of continued exposure? If so, how long does the redistribution last?

(c) If marine mammals are exposed to MFAS/HFAS, what are their behavioral responses to various levels?

(d) What are the behavioral responses of marine mammals that are exposed to explosives at specific levels?

(e) Is the Navy's suite of mitigation measures for MFAS/HFAS and explosives (*e.g.,* Protective Measures Assessment Protocol, major exercise measures agreed to by the Navy through permitting) effective at avoiding TTS, injury, and mortality of marine mammals?

Given the larger scope of training events within other Navy range complexes as compared to the GoA, not all of these original five study questions would necessarily be addressed in the final GoA TMAA Monitoring Plan. Rather, data collected from the GoA monitoring efforts would be used to supplement a consolidated range complex marine mammal monitoring report incorporating data from the Hawaii Range Complex, Marianas Island Range Complex, Northwest Training Range Complex, and Southern California Range Complex.

Data gathered in these studies will be collected by qualified, professional marine mammal biologists who are experts in their field.

Monitoring methods proposed for the GoA include use of passive acoustic monitoring (PAM) to primarily focus on providing additional data for study questions (b) and (c).

This monitoring plan has been designed to gather data on all species of marine mammals that are observed in the GoA TMAA study area; however, the Navy will prioritize monitoring efforts for ESA-listed species and beaked whale species. The Plan recognizes that deep-diving and cryptic species of marine mammals, such as beaked whales and sperm whales, may have low probability of visual detection (Barlow and Gisiner, 2006). Therefore, methods will be utilized to address this issue (*e.g.,* PAM).

During the comment period on the Notice of Receipt (75 FR 5575, February 3, 2010) for the GoA TMAA action, NMFS received multiple public comments suggesting that there are inadequate density, distribution, and abundance data for marine mammals in the GoA TMAA. As mentioned previously, the Navy funded a $250,000 density survey in the offshore waters of the GoA TMAA in April, 2009. The Navy developed its draft monitoring plan for the GoA TMAA was developed to contribute scientific information to the overall NMFS–Navy monitoring goals. It selected year-round PAM recorders as the most appropriate long-term tool for obtaining more precise marine mammal occurrence data (presence/absence) in the GoA TMAA, especially in the offshore waters where weather and sea conditions would likely limit the usefulness of visual surveys. At other Navy range complexes, results from similar PAM recordings have begun to provide better information on species-specific occurrence and behavior.

NMFS believes that we should vigorously target this baseline information need with the monitoring plan and, in consideration of the public comments that we received on the proposed rule (75 FR 64508, October 19, 2010), we worked with the Navy on revising the plan. The revised monitoring plan now includes a commitment by the Navy to deploy PAM devices in 2011 and 2012 in the GoA TMAA to detect, locate, and potentially track vocalizing marine mammals, as well as provide seasonal estimates of presence/absence. These devices will be deployed year-round, including during Navy training events. Given the potential seas states and ocean conditions during both winter and summer, and the relatively infrequent Navy presence in the GoA TMAA, PAM represents the best long-term monitoring technique to employ within the GoA TMAA. In addition to collecting marine mammal vocalization and echolocation data before, during, and after any Navy training event, information can be inferred as to whether the training event has an effect or no effect on observed vocalizations. In 2013 and 2014, the Navy plans to conduct further monitoring using either PAM or another survey method. An alternate survey technique would ideally be part of a larger focused effort during the same time period in coordination with other agencies or research organizations working in the area. While the exact extent and

technique to be employed is still undetermined (*e.g.,* including but not limited to visual survey), monitoring in 2013 and 2014 is expected to receive the same level of fiscal and logistical support as the 2011–2012 efforts.

In addition to the Monitoring Plan for the GoA, the Navy has established an Integrated Comprehensive Monitoring Program (ICMP). The ICMP is a Navy-wide monitoring framework that will provide an overarching structure and coordination that will, over time, compile data from all Navy range-specific monitoring plans; the GoA TMAA plan is just one component of the ICMP. The overall objective of the ICMP is to assimilate relevant data collected across Navy range complexes in order to answer questions pertaining to the impact of MFAS and underwater explosive detonations on marine animals. Top priorities of the ICMP include: monitoring Navy training events, particularly those involving MFAS and underwater detonations; collecting data to estimate the number of individuals exposed to sound levels above current regulatory thresholds; assessing the efficacy and practicability of monitoring and mitigation tools and techniques and the Navy's current mitigation methods; and adding to the overall knowledge base on potential behavioral and physiological effects to marine species from MFAS and underwater detonations. More information about the ICMP may be found in the Monitoring Plan for the GoA.

Monitoring Workshop

The Navy, with guidance and support from NMFS, will convene a Monitoring Workshop, including marine mammal and acoustic experts as well as other interested parties, in 2011. The Monitoring Workshop participants will review the monitoring results from other Navy rules and LOAs (*e.g.,* the Southern California Range Complex (SOCAL), Hawaii Range Complex (HRC), *etc.*). The Monitoring Workshop participants will provide their individual recommendations to the Navy and NMFS on the monitoring plan(s) after also considering the current science (including Navy research and development) and working within the framework of available resources and feasibility of implementation. NMFS and the Navy will then analyze the input from the Monitoring Workshop participants and determine the best way forward from a national perspective. Subsequent to the Monitoring Workshop, NMFS and the Navy will apply modifications to monitoring plans as appropriate.

Adaptive Management

Our understanding of the effects of MFAS and explosives on marine mammals is still in its relative infancy, and yet the science in this field is evolving fairly quickly. These circumstances make the inclusion of an adaptive management component both valuable and necessary within the context of 5-year regulations for activities that have been associated with marine mammal mortality in certain circumstances and locations (though not in the Pacific Ocean or within the GoA TMAA). NMFS has included an adaptive management component in these regulations, which will allow NMFS to consider new information from different sources to determine (in coordination with the Navy and with input regarding practicability) on an annual or biennial basis if mitigation or monitoring measures should be modified (including additions or deletions) if new data suggest that such modifications are appropriate for subsequent annual or biennial LOAs.

The following are some of the possible sources of applicable data: (1) Findings of the Workshop that the Navy will convene in 2011 to analyze monitoring results to date, review current science, and recommend modifications, as appropriate, to the monitoring protocols to increase monitoring effectiveness; (2) compiled results of Navy funded research and development (R&D) studies (presented pursuant to the ICMP, which is discussed elsewhere in this document); (3) results from specific stranding investigations (involving coincident MFAS or explosives training or not involving coincident use); (4) results from general marine mammal and sound research; and (5) any information which reveals that marine mammals may have been taken in a manner, extent or number not authorized by these regulations or subsequent Letters of Authorization.

Separately, in July, 2010, NMFS and the Navy convened the "Marine Mammals and Sound" workshop, which brought together science and policy experts from the government, the academic community, and non-governmental organizations with the goals of prioritizing marine mammal research needs and opening up a broad discussion of (and potentially making recommendations regarding) some of the current management issues related to marine mammals and sound. After the information and ideas gathered during this workshop are sorted, compiled, and assessed, NMFS will use them, as appropriate, to inform our management decisions on issues such as appropriate mitigation and monitoring. In addition to considering these workshop products in the broader context of all MMPA authorizations from the Office of Protected Resources, they will also be considered as NMFS and the Navy work through the Adaptive Management process outlined for the GOA below.

Mitigation measures or monitoring requirements could be modified, added, or deleted if new information suggests that such modifications would have a reasonable likelihood of accomplishing the goals of mitigation or monitoring laid out in this final rule and if the measures are practicable.

Reporting

In order to issue an ITA for an activity, section 101(a)(5)(A) of the MMPA states that NMFS must set forth "requirements pertaining to the monitoring and reporting of such taking." Effective reporting is critical both to compliance as well as ensuring that the most value is obtained from the required monitoring. The proposed rule contains the reporting requirements for the Navy (75 FR 64508, pages 64550–64552), and these requirements remain unchanged.

Comments and Responses

On October 19, 2010 (75 FR 64508), NMFS published a proposed rule in response to the Navy's request to take marine mammals incidental to military readiness training in the GoA TMAA and solicited comments, information, and suggestions concerning the proposed rule. NMFS received twelve comment letters from environmental non-governmental organizations, the Marine Mammal Commission (MMC), and interested members of the public. The comments are summarized, sorted into general topic areas, and addressed below. Full copies of the comment letters may be accessed at *http://www.regulations.gov.*

NMFS worked with the Navy to develop MMPA rules and LOAs for the GoA TMAA, Atlantic Fleet Active Sonar Training (AFAST) activities, Southern California Range Complex (SOCAL), Hawaii Range Complex (HRC), Mariana Islands Range Complex (MIRC), and Northwest Training Range Complex (NWTRC). Many of the issues raised in the public comments for this rule were also raised for these previous rules, and NMFS considered many of the broader issues in the context of all of these Navy actions when determining how to address the comments on the GoA TMAA. Responses to public comments on AFAST, SOCAL, and HRC were

published in January 2009, and responses to public comments on MIRC and NWTRC were published in August and November 2010, respectively. These final rules and their responses to public comments may provide the public with additional detail, if needed.

Additional Mitigation Recommendations

Comment 1: One commenter suggests that aerial surveys before SINKEXs (75 FR 64508, p. 64546) should be mandatory, especially when the Beaufort Sea State is above 3.

Response: As stated in the proposed rule, in the event of a Beaufort Sea State 4 or above, survey efforts shall be increased within the 2 nm (3.7 km) zone around the target. This shall be accomplished through the use of an additional aircraft, if available, and conducting tight search patterns. The exercise shall not be conducted unless the 2 nm (3.7 km) zone around the target could be adequately monitored visually.

Comment 2: One commenter suggests that over-flights should be required for spotting marine mammals before detonation exercises (75 FR 64508, p. 64552) because the typical sea state in GoA is usually greater than 1.

Response: As stated in the proposed rule, a series of surveillance over-flights shall be conducted within the exclusion and the safety zones, prior to and during exercises, when feasible.

Comment 3: One commenter asked whether the training could be done during times of the year that would result in the minimal impact to all species. Another commenter asked whether there is another location that could be used for at least part of the training, where fewer animals would be impacted.

Response: While several species of baleen whales have periods of increased prevalence within the TMAA, these times do not always overlap; hence, it is not possible for the Navy to avoid every species of marine mammal. Furthermore, most species are more prevalent during summer months, which is when the Navy needs to do their exercises. Training during the winter months is not an option due to human safety concerns. Certain specific types of seasonal and geographic restrictions or limitations are impracticable for the Navy's activities in the TMAA.

In response to the second part of the comment, the TMAA was chosen very carefully in order to meet the Navy's training requirements and allow for the safe operation of ships, aircraft, and submarines. Moving the training activities to alternative locations would impact the effectiveness of the training and has no known benefit. Moreover, satisfying this request is beyond NMFS' authority under current laws. Furthermore, the existing marine mammal density and distribution information does not suggest that there are specific areas within the GoA where training would result in fewer impacts to marine mammals.

Comment 4: One commenter asked if the military could develop and substitute computer-simulated training for at least part or most of the training.

Response: As explained in the Navy's EIS, the Navy often employs simulators and synthetic training, but live training in a realistic environment is vital to success. The Navy relies on realistic combat-like training to prepare men and women for deployment. Moreover, a simulator cannot match the dynamic nature of the environment, either in bathymetry, sound propagation properties, or oceanography. In addition, coordinated unit level and Strike Group Training activities require multiple crews to interact in a variety of acoustic environments that cannot be simulated. Finally, it is a training imperative that crews actually use the equipment they will be called upon to operate. For more information on the simulated training option please refer to the Alternatives Eliminated from Further Consideration section of the Navy's EIS.

Comment 5: One commenter refers to the Navy's claims that it does not anticipate beaked whale mortality, yet requests Level A take, and states that this is not acceptable; beaked whales require additional mitigation and protection from Navy sonar.

Response: As stated in the proposed rule, evidence from five beaked whale strandings (all of which have taken place outside the GoA TMAA, and have occurred over approximately a decade) suggests that the exposure of beaked whales to MFAS in the presence of certain conditions (*e.g.,* multiple units using active sonar, steep bathymetry, constricted channels, strong surface ducts, *etc.*) may result in strandings, potentially leading to mortality. Although not all five of these physical factors believed to have contributed to the likelihood of beaked whale strandings are present, in their aggregate, in the GoA TMAA, scientific uncertainty exists regarding what other factors, or combination of factors, may contribute to beaked whale strandings. Accordingly, to allow for scientific uncertainty regarding contributing causes of beaked whale strandings and the exact behavioral or physiological mechanisms that can lead to the stranding and/or death, the Navy has requested authorization for (and NMFS is authorizing) take by injury or mortality. Although NMFS is authorizing take by injury or mortality of up to 15 beaked whales over the course of the 5-year regulations, the Navy's model did not predict injurious takes of beaked whales and neither NMFS nor the Navy anticipates that marine mammal strandings or mortality will result from the operation of MFAS during Navy exercises within the GoA TMAA. NMFS determined that the impact to beaked whales from the Navy's activities cannot be reasonably expected to, and is not reasonably likely to, adversely affect the species or stock through effects on annual rates of recruitment or survival and, therefore, concluded that the activity would have a negligible impact for these species.

Comment 6: One commenter refers to NMFS' mention of the ENP Alaskan resident stock and ENP Alaskan transient stock (75 FR 64508, p. 64571) of killer whales and asks if this is the depleted Prince William Sound stock. If so, according to the commenter, they require special consideration.

Response: The ENP Alaska resident stock includes the Prince William Sound pod; however, this stock of killer whales is not listed as "depleted" under the MMPA. In the Gulf of Alaska, Malkin *et al.* (1999) described two genetically distinct communities of transient killer whales that do not interact, the so-called Gulf of Alaska transients and the AT1 transients. In 2004, the AT1 transient killer whale group was determined by NMFS to be depleted under the MMPA. Individuals from this stock may be present in the TMAA; however, the Navy's activities are not expected to occur in an area/time of specific importance for reproduction, feeding, or other known critical behaviors. Furthermore, these large-grouped gregarious animals are very likely to be detected by Marine Mammal Observers (MMOs) and Navy Lookouts. As stated in the proposed rule, NMFS has determined that the Navy's specified activities will have a negligible impact on this species.

Comment 7: The MMC recommends that the rule require the suspension of the Navy's activities if a marine mammal is seriously injured or killed and the injury or death could be associated with those activities. The injury or death should be investigated to determine the cause, assess the full impact of the activity or activities and determine how activities should be modified to avoid future injuries or deaths.

Response: NMFS and the Navy have developed a detailed Stranding Response Plan for the GoA TMAA that outlines protocols for, and describes the underlying rationale for shutdown (in very specific circumstances) and investigation in the event that dead or stranded animals are found in the vicinity of an exercise. In addition, NMFS' regulations include a provision for "General notification of injured or dead marine mammals," that requires Navy personnel to notify NMFS immediately (or as soon as clearance procedures allow) if an injured, stranded, or dead marine mammal is found during or shortly after, and in the vicinity of, any Navy training exercise utilizing MFAS, HFAS, or underwater explosive detonations. The provision further requires the Navy to provide NMFS with species identifications or descriptions of the animal(s), the conditions of the animal(s) (including carcass condition if the animal is dead), location, time of first discovery, observed behaviors (if alive), and photo or video of the animal(s) (if available).

It can take months to years to complete the necessary tests and analysis required to determine, with a reasonable amount of certainty, the cause of a marine mammal death—and sometimes it is not possible to determine it. All but one of the small number of strandings that have occurred around the world associated with MFAS exercises have occurred concurrent with MFAS exercises that would have been considered "major," which typically involve multiple surface vessels and last for a much longer duration than non-major exercises. Therefore, NMFS (with input from the Navy) determined that it was beneficial and practicable to preemptively outline an explicit plan (that includes a shutdown requirement in certain circumstances) for how to deal with a stranding that occurs during a major exercise, and Stranding Response Plans were developed for all of the areas in which major exercises are conducted. Alternatively, for non-major exercises, the general notification provisions apply, under which the Navy would contact NMFS as soon as clearance procedures allow and we would determine how best to proceed at that time.

Because: (1) So few strandings have been definitively associated with MFAS training in the 60+ years that the U.S. and other countries that share information have been conducting MFAS training; (2) the exercises conducted in the GoA TMAA are of short duration and seasonally limited (*i.e.,* no more than two 21-day exercises, which may only be conducted between the months of April and October); and (3) investigations take a long time and are not always conclusive, it is not reasonable or practicable to require the Navy to shut down every time an injured or dead animal is found in the vicinity pending the results of an investigation that could take years to conduct.

However, NMFS and the Navy will implement the Stranding Response Plan as written and, as in the past, will work together on a case-by-case basis within the constraints of our available resources to investigate the causes of any stranding or death occurring during a non-major exercise. Once investigations are completed and determinations made (as feasible), NMFS would use the available information to help reduce the likelihood that a similar event would recur and would work with the Navy on the necessary steps to ensure compliance by the Navy with the MMPA. NMFS and the Navy will develop and finalize a Memorandum of Agreement that will streamline and improve the way that the Navy assists NMFS during a stranding investigation. Finally, the Stranding Response Plan includes a provision for stranding debriefs/lessons learned meetings between NMFS and the Navy following a stranding response, and the GoA TMAA rule includes an adaptive management provision that allows for the modification of mitigation or monitoring measures based on new information (like that which might be gathered during a stranding response/investigation), as appropriate.

Comment 8: One commenter states that NMFS' assertion regarding blue whales most likely feeding during the summer months should lead to NMFS prohibiting Navy activities during this time.

Response: NMFS stated that, "like most baleen whales, blue whales would most likely feed in the north during summer months (potentially the GoA) and head southward in the cooler months." However, the GoA TMAA activities are not expected to occur in an area/time of specific importance for breeding, calving, or other known critical behaviors of blue whales. Currently, there are no known specific feeding grounds for blue whales within the TMAA. Furthermore, the blue whales' large size and detectability makes it unlikely that these animals would be exposed to the higher levels of sound expected to result in more severe effects. Moreover, training during other times of the year is not an option due to human safety concerns.

Comment 9: One commenter requests that NMFS protect feeding grounds for humpback whales and migratory routes for gray whales. In addition, this commenter and another commenter request that NMFS protect (*e.g.,* prohibit MFAS within) high bathymetric relief areas for beaked whales.

Response: In the proposed rule, NMFS stated that most baleen whales, including humpback and gray whales, would most likely feed in the north during summer months, potentially the GoA, and head southward in the cooler months. However, the GoA TMAA activities are not expected to occur in an area/time of specific importance for breeding, calving, or other known critical behaviors. Currently, there are no known specific feeding grounds for humpback or gray whales within the TMAA. Furthermore, their large size and detectability makes it unlikely that these animals would be exposed to the higher levels of sound expected to result in more severe effects.

As indicated in the Navy's EIS and referenced in the proposed rule, gray whales have a well-defined north-south migratory path that takes them through the GoA twice a year. During migration through the GoA, gray whales' primary occurrence extends seaward 15 nm (28 km) from the shoreline within a narrow margin of the TMAA's northern boundary. The April 2009 survey encountered one group of two gray whales within the western edge of the TMAA and two groups well outside the TMAA nearshore at Kodiak Island (Rone *et al.,* 2009). The potential impacts to gray whales from Navy training activities are specifically discussed in the Potential Effects of Specified Activities on Marine Mammals section of the proposed rule. Given the transient nature of gray whales during migration through the GoA, and in light of the Navy's mitigation measures, although some gray whales may be behaviorally disturbed, more severe responses are not anticipated and NMFS determined that the take will have a negligible impact on the stock.

With respect to high bathymetric relief areas and beaked whales, the Navy's training exercises are spread throughout the GoA TMAA (as opposed to being focused in an area of known particular importance). Furthermore, the Navy's activities in the GoA are only occurring for a 21-day period once or twice a year.

Comment 10: One commenter states that NMFS must ensure that SINKEXs do not occur in or near critical habitat or breeding/feeding grounds.

Response: NMFS agrees that protecting important habitat (*e.g.,*

critical habitat or areas known for displays of important behaviors such as breeding and feeding) can be an effective way to minimize impacts to marine mammals; however, SINKEXs will not occur in or near critical habitat because designated critical habitats for Steller sea lions and North Pacific right whales are outside of the GoA TMAA. Furthermore, the commenter has neither suggested particular areas used by marine mammals for breeding/feeding nor presented any additional evidence that NMFS could consider in identifying such areas within the GoA TMAA. Pursuant to the MMPA, NMFS makes mitigation decisions based on the biological information pertaining to the potential impacts of an activity on marine mammals and their habitat (and the practicability of the measure). SINKEXs, in general, require the most comprehensive suite of mitigation measures relative to other Navy training exercises and the permit issued to the Navy under the Marine Protection, Research and Sanctuaries Act requires vessels to be sunk in waters that are at least 6,000 ft (1,829 m) deep and at least 50 nm (92.6 km) from land. In addition, the Navy has agreed not to conduct SINKEXs within Habitat Areas of Particular Concern (HAPCs) established in the GoA. NMFS believes that the permit conditions and avoidance of HAPCs, in conjunction with the Navy's SINKEX mitigation plan, set forth a means for effecting the least practicable adverse impact. The rationale behind this finding was discussed in the Mitigation Conclusion section of the proposed rule (75 FR 64508, pages 64546–64548).

Comment 11: One commenter states that, with respect to North Pacific right whales, the Navy must take all possible precautions, including a larger buffer zone around the critical habitat area that extends inside the TMAA, and ceasing all activity when whales are present. Another similar comment states that NMFS should require sufficient buffers between critical habitat and the TMAA. Another commenter claims NMFS' proposal to allow Level B takes of North Pacific right whales (75 FR 64508, p. 64568), is unacceptable due to their critically endangered status.

Response: NMFS believes that the location of the TMAA relative to designated critical habitats is sufficient to avoid diminishing their conservation value to species. For example, the nearest boundary of the Pacific right whale critical habitat is approximately 16 nm (30 km) west of the southwest corner of the TMAA. NMFS believes that this distance, coupled with the fact that most exercises will take place away from the boundaries of the TMAA, provide an adequate buffer around North Pacific right whale critical habitat. In addition, current regulations (50 CFR 224.103(c)) require ships to maneuver to maintain at least 500 yards (460 m) of separation from any observed right whale (consistent with safety of ship). The Navy's model predicted that approximately 10 takes of North Pacific right whales would occur within the GoA TMAA over the course of five years (and no takes by injury or mortality). NMFS believes that by implementing specific mitigation measures the Navy has minimized, to the extent practicable, the impacts to North Pacific right whales and their critical habitat.

In addition, the TMAA is located offshore of the main habitat and foraging grounds for Steller sea lions. While the Steller sea lions' range runs adjacent to the TMAA, their foraging habitat consists primarily of shallow, nearshore areas, and continental shelf waters 8 to 24 km (4.3 to 13 nm) offshore, which are inshore of the TMAA boundaries. There is no critical habitat for Steller sea lions within the TMAA boundaries. The area designated as critical habitat was based on land use patterns, the extent of foraging trips, and the availability of prey items, with particular importance given to the haul out areas where Stellers rest, pup, nurse, mate, and molt.

With respect to the additional comment regarding takes of North Pacific right whales, as noted in the proposed rule, only Level B takes in the form of behavioral disturbances are anticipated. No TTS takes are estimated because the North Pacific right whales' large size and detectability makes it unlikely that these animals would be exposed to the higher levels of sound expected to result in more severe effects.

Mitigation Effectiveness

Comment 12: According to one commenter, NMFS states that bow riding dolphins will not be affected because they are outside the main beam of the sonar (75 FR 64508, p. 64547). The commenter then asks about the assumption that marine mammals will not approach ships, and whether the Navy is supposed to cease MFAS when marine mammals are within 1,000 yds.

Response: Dolphins are known to deliberately close in on a ship to ride the vessel's bow wave. While in the shallow-wave area of the vessel bow, dolphins are out of the main transmission axis of the active sonar. As stated in the proposed rule, if after conducting an initial maneuver to avoid close quarters with dolphins or porpoises, the Officer of the Deck (OOD) concludes that dolphins or porpoises are deliberately closing to ride the vessel's bow wave, no further mitigation actions are necessary while the dolphins or porpoises continue to exhibit bow wave riding behavior.

Comment 13: One commenter claims that NMFS fails to describe Navy's "suite of mitigation measures" (75 FR 64508, p. 64549).

Response: NMFS discussed the proposed mitigation measures in detail within the proposed rule (75 FR 64542, October 19, 2010). To briefly reiterate, they include personnel training, specific operating procedures and collision avoidance, shutdowns, buffer zones, and Lookouts. This information is also explicitly described in the regulatory text of the final rule.

Comment 14: One commenter asserts that safety zones (1,000 yard power-down and 200 yard shut down) around sonar domes are an inadequate and ineffective mitigation measure. Similarly, another commenter recommended that the 1,000 yard safety zone should be increased to 2,000 yards.

Response: The commenter provides no justification for increasing the buffer zone to 2,000 yards. The Navy's powerdown and shutdown strategy (*i.e.,* the specific distances) is intended to avoid exposure of marine mammals to injurious levels of sound (which is thought to occur at about 10 m from the source), and to reduce exposing marine mammals (to varying degrees, depending on the species and environmental conditions) to higher levels of sound that might be associated with more severe behavioral responses. As the proposed rule discussed, while visual detection of marine mammals is not anticipated to be 100% effective, the 1,000 yard safety zone coincides with a Lookout's ability to realistically maintain situational awareness over a large area of the ocean; including the ability to detect marine mammals during less than ideal sea state conditions. The Mitigation Conclusion section of the proposed rule describes NMFS' least practicable adverse impact analysis (75 FR 64508, pages 64546–64548).

Comment 15: One commenter expressed concern over the unknown impacts of the way sound travels with respect to the large underwater canyons in the GoA and states that the Navy does not set forth adequate measures to mitigate harmful effects of sonar primarily with sensitivity to fin, right, minke, or killer whales.

Response: In general, environmental parameters—such as bathymetry—play an important role in the Navy's analysis of marine mammal impacts, and due to the importance that propagation loss

plays in ASW exercises, the Navy has, over the last four to five decades, invested heavily in measuring and modeling environmental parameters. Within the GoA TMAA, the Navy has identified six bathymetric provinces ranging from 100 m to typical deep-water depths (slightly more than 5,000 m). To model how sound from a particular source travels through the water column, bathymetric features are combined with other environmental parameters, such as sound speed profiles and High-Frequency Bottom Loss classes to determine propagation loss, and, ultimately, the zone of influence of a particular sound source.

The model used by the Navy to estimate marine mammal exposures to sonar, which also considers the density of each species in the area, did not predict any Level A exposures (PTS) on fin, North Pacific right, minke, or killer whales. With respect to mitigation measures, NMFS indicates that Level A Harassment (injury) and Temporary Threshold Shift (TTS) (one type of Level B Harassment) are unlikely to occur because of: The distance from the source within which an animal would need to approach to be exposed to levels associated with injury (~ 10 m) or TTS (~178–335 m); the fact that Lookouts would detect animals at that close distance; the fact that the Navy model (which does not take mitigation or avoidance into consideration) predicted that 1 Dall's porpoise would be exposed to injurious levels of sound and 931 animals would be exposed to levels associated with TTS; and the fact that many (not all) animals will avoid sonar at some distance. Although modeling predicted that one animal would be exposed to levels of sound that would cause injury, Level A takes were not requested by the Navy (and NMFS is not authorizing Level A takes) because the implementation of mitigation and monitoring procedures will further minimize the potential for marine mammal exposures to sonar sources. Additionally, the Navy is capable of effectively monitoring a 1,000 m safety zone using a variety of techniques, including binoculars, night vision goggles, infrared cameras, and passive acoustic monitoring.

Comment 16: One commenter claims that NMFS assumes marine mammals can easily move away during SINKEXs, but asserts that little to nothing is known about how marine mammals in the GoA will react to noise.

Response: The commenter misrepresents this piece of text from the proposed rule. Up to two SINKEXs are planned annually for the GoA TMAA. These exercises are stationary and conducted in deep, open water where few marine mammals would typically be expected to be randomly encountered. NMFS does not solely rely on the animal's ability to detect the activity and avoid it as a mitigation measure during SINKEXs. In fact, SINKEXs have the most rigorous monitoring and shutdown protocol of any planned explosive exercise. For a complete list of these protocols, please refer to § 218.124(a)(4).

Impact Assessment

Comment 17: One commenter claims that NMFS refers to models, but does not provide a source (75 FR 64508, p. 64548).

Response: NMFS refers to the model used by the Navy to estimate marine mammal takes in the GoA, which is described in detail in Appendix B of the LOA application and Appendix D of the EIS.

Comment 18: One commenter claims that NMFS does not address the issue of greenhouse gases from overflights.

Response: NMFS is not authorizing the Navy's activities; rather, we are analyzing and authorizing the take of marine mammals incidental to those activities. NMFS does not anticipate that greenhouse gas emissions from overflights will result in marine mammal take, and therefore, we do not address the issue any further. Please refer to section 3.1 of the EIS for a detailed discussion of potential impacts to air quality, including emissions from aircraft activities.

Comment 19: One commenter claims NMFS states that the probability of marine mammals approaching the sonar dome is low (75 FR 64508, p. 64547), but does not cite where that information is from and does not take into account deep-diving whales that may be present.

Response: NMFS actually stated that the probability that a marine mammal would approach within the above distances of the sonar dome without being seen by the watchstanders is very low. The watchstanders' job is to look for marine mammals and activate a shutdown, should they approach within 200 yd (183 m).

Comment 20: One commenter asserts that NMFS claims that animals exposed to MFAS would not receive enough exposure to drive bubble growth to substantial size (75 FR 64508, p. 64553), and asks what studies substantiate this assertion.

Response: The proposed rule contained a detailed discussion of the many hypotheses involving both acoustically-mediated and behaviorally-mediated bubble growth. NMFS concluded that there is not sufficient evidence to definitively say that any of these hypotheses accurately describe the exact mechanism that leads from sonar exposure to a stranding. Despite the many theories involving bubble formation (both as a direct cause of injury and an indirect cause of stranding), Southall *et al.* (2007) summarizes that scientific disagreement or complete lack of information exists regarding the following important points: (1) Received acoustical exposure conditions for animals involved in stranding events; (2) pathological interpretation of observed lesions in stranded marine mammals; (3) acoustic exposure conditions required to induce such physical trauma directly; (4) whether noise exposure may cause behavioral reactions (such as atypical diving behavior) that secondarily cause bubble formation and tissue damage; and (5) the extent to which the post mortem artifacts introduced by decomposition before sampling, handling, freezing, or necropsy procedures affect interpretation of observed lesions. Based on the best available science, NMFS stated that a short duration of active sonar pings (such as that which an animal exposed to MFAS would be most likely to encounter) would not likely be long enough to drive bubble growth to any substantial size (75 FR 64553, October 19, 2010). The Navy's mitigation and monitoring measures are in place to prevent prolonged exposure of marine mammals to MFAS.

Comment 21: One commenter refers to NMFS' use of a risk function based on studies on four species and limited science (75 FR 64508, p. 64558) and asks if this is a risk model that will be used in the GoA. If so, the commenter asserts, it needs to integrate cumulative, long-term, synergistic stressors. The commenter claims that if there is no data to allow for this integration, then NMFS should not be using this risk function to estimate and authorize takes.

Response: NMFS has explained in the proposed rule why we chose the three datasets we used to define the risk function. These three datasets represent the only known data that specifically relate altered behavior responses (that NMFS would consider Level B Harassment) to exposure—at specific received levels—to MFAS and sources within or having components within the range of MFAS (1–10 kHz). As commenters have pointed out in previous rules, there are datasets that report marine mammal responses to lower levels of received sound; however, because of the structure of the curve NMFS uses and what it predicts (Level B Harassment), we need datasets

that show a response that we have determined qualifies as harassment (in addition to needing a source that is adequately representative of MFAS and includes reliable specific received level information), which many of the lower level examples do not.

Comment 22: One commenter claims that the hours of MFAS over a 5-year period are not readily apparent in Table 8.

Response: Table 8 (Table 5 in this final rule) is not intended to depict the hours of MFAS over a 5-year period. Rather, the table shows the Navy's estimated amount of take and NMFS' proposed annual take authorization. The hours of sonar sources authorized over a 5-year period are included in Subpart N of Part 218—Regulations Governing the Taking and Importing of Marine Mammals.

Comment 23: One commenter asks if sonar has been shown to affect the successful reproduction of any marine mammal species or their prey.

Response: In the Species Specific Analysis section of the proposed rule, NMFS discusses potential effects on marine mammals in the GoA TMAA, including population level effects. The GoA TMAA activities are not expected to occur in an area/time of specific importance for breeding, calving or other known critical behaviors. In addition, the size of many large whale species and group size of smaller ododocetes improves detectability and makes it unlikely that these animals would be exposed to higher levels of sound that would be expected to result in more severe effects. Therefore, the activities are not expected to adversely impact rates of recruitment and survival of these marine mammals species or stocks and NMFS has determined that the Navy's activities will have a negligible impact on the affected species or stocks. With respect to marine mammal prey, in the Effects on Marine Mammal Habitat section, NMFS discusses the effects on marine mammal food resources, including fish and invertebrates. Potential impacts to marine mammal food resources within the GoA TMAA are negligible given both the lack of hearing sensitivity to mid-frequency sonar, the very limited spatial and temporal scope of most Navy activities at sea including underwater detonations, and the high biological productivity of these resources. NMFS concludes that no short- or long-term effects to marine mammal food resources from Navy activities are anticipated within the GoA TMAA.

Comment 24: One commenter asserts that plastic, heavy metals, and nylon materials from sonobuoys will undoubtedly wash up along the GoA, degrading the marine environment and posing a potential risk to marine mammals, and believes that NMFS does not appropriately address the issue of flotsam from expended materials.

Response: The effects from expended materials are considered insignificant and discountable, as addressed in the Navy's EIS. The probability of a marine mammal ingesting any material is extremely low based on the size of the TMAA, the limited duration of the training exercises, and the low concentration of certain materials being used. Other materials are expected to sink beyond the known depth of marine mammals or are considered large enough to prohibit ingestion.

Comment 25: The MMC recommended that NMFS advise the Navy to consult with the U.S. Fish and Wildlife Service to determine if the Navy also needs authorization to take sea otters.

Response: The Navy has consulted on the GoA TMAA action under section 7 of the ESA with the USFWS, which has jurisdiction over sea otters. The Navy and the USFWS coordinated regarding the list of species, and sea otters were not included. Sea otters are considered to be extralimital to the GoA TMAA and none were encountered within the TMAA during the April 2009 GOALS survey (Rone *et al.,* 2009). The MMC concurred that sea otters were unlikely to enter the Navy training range area due to the distance from shore in their comment letter on the DEIS dated January 27, 2010.

Comment 26: The MMC recommended that NMFS require the Navy to conduct an external peer review of its marine mammal density estimates for the GoA, the data upon which those estimates are based, and the manner in which those data are being used.

Response: Both NMFS and the Navy use peer-reviewed science whenever it is available and applicable, and NMFS has encouraged the Navy to get the models they use and data they gather peer-reviewed. In 2008, the impacts analysis model used for the GoA TMAA (and the previous Navy EISs and final rules) underwent the NMFS peer review process using the Center for Independent Experts (CIE) and was deemed adequate and sufficient for the purpose for which it was being used. Recommendations made by the CIE for improvements were incorporated into the next generation model upgrades.

In the context of the Navy's GoA TMAA EIS/OEIS and LOA application, the marine mammal densities used in the Navy's impact analysis were derived from several sources, which are summarized in Table B–16 of the Navy's LOA application. The sources the Navy relied upon to derive density estimates for marine mammal species in the GoA are all from peer-reviewed journals. In addition, due to the lack of new survey data for marine mammals in the GoA, the Navy funded the Gulf of Alaska Line-Transect Survey (GOALS), which was conducted in April 2009. During this survey, line-transect visual data and acoustic data were collected over a 10-day period, from which densities were derived for fin and humpback whales for inshore and offshore strata.

Also, while it is not the same as peer review, both the NEPA and MMPA processes include a comment period during which the public can specifically recommend better ways to use the data to estimate density, which the Navy and NMFS take into account. For example, the proposed rule for the GoA TMAA (75 FR 64508, October 19, 2010) encouraged the public to recommend effective, regionally specific methods for augmenting existing marine mammal density, distribution, and abundance information in the GoA TMAA and to prioritize the specific density and distribution data needs in the area.

Further, a new systematic framework (that includes a hierarchy of preferred methodologies based on the data available in an area) is being developed by the Navy to estimate density in the analyses for the rule renewals that will follow the expiration of the MMPA rules for Navy training in 2009, 2010, and 2011 (*i.e.,* rules that would, if appropriate, be issued in 2014 and later). The Navy has indicated that they may pursue a peer review of this framework and NMFS has encouraged them to do so.

Comment 27: The MMC recommended that NMFS require the Navy to estimate marine mammal takes using season- and location-specific environmental parameters (including sound speed profiles and wind speed) and marine mammal densities before issuing the final rule; if the Navy plans to conduct training exercises in April or May, but does not provide more realistic take estimates for these months, NMFS should limit the final rule to exercises that occur during the period from June to October.

Response: The Navy did consider densities during April–May, but elected to use the higher summer densities as a conservative measure (*i.e.,* over prediction of potential exposures). The multi-day Northern Edge (NE) exercise is the main modeling driver for exposures, and these event-based exposures are what are summed in the "annual" exposures. Highest densities

from the summer were used to model two NE events; the sum of all current exposures likely overestimates exposure to all species (mitigation is not factored into these exposure values either), and re-modeling/re-assessing for April–May for two species of pinnipeds would not significantly change species specific or total exposures. The modeling was not done for an entire period of time (June–October) of continuous activity. This is different from other range complexes like SOCAL where there is year round unit level training. The only Navy ships in the GOA will likely be there in association with NE exercises.

Comment 28: Ocean Conservation Research (OCR) included a copy of their comments on the Navy's EIS and suggested that some of those comments also pertained to the MMPA authorization. Other commenters mirrored several of the recommendations that OCR made in these comments.

Response: OCR and others assert that the chemical, toxic, and "inert" pollution models used in the GoA DEIS are over simplistic and do not take into account the current state of knowledge about accumulation and concentrations of chemical, toxic, and "inert" pollutant behavior throughout the entire ocean, and up and down the entire food chain—including humans. The Navy did not expect GoA TMAA exercises to result in the production of any toxic chemicals that would affect marine mammals. The EIS did analyze the potential impacts from PUTR material, ordnance and target-related materials, chaff, sunken hulks (*i.e.,* SINKEXs), and expended sonobuoys, and found that no significant impacts to marine mammals were likely to result from those expended materials. Therefore, the Navy determined that marine mammals would not be taken via ingestion of toxins or interaction with the aforementioned expended materials and they did not request (nor did NMFS grant) authorization for take of marine mammals via these methods.

Comment 29: One commenter claims that, due to insufficient data provided on the sonar characteristics and source levels, assessments of potential impacts are incomplete.

Response: NMFS does not agree with the commenter's claim that insufficient data were provided on the sonar characteristics and source levels used in the GoA TMAA. To the extent permissible (*i.e.,* not classified), the Navy provided detailed source descriptions in Table B–4 of the Navy's LOA application. The same information was provided in Table D–4 of the Navy's EIS. If unclassified, these tables include source depth, center frequency, source level, emission spacing, vertical directivity, and horizontal directivity for the active sonar sources used in the TMAA. The Navy then used the characteristics of these sources to model the potential impacts on marine mammals.

Comment 30: One commenter claims that the bio-acoustic impact models used in the DEIS are overly simplistic and do not represent wild animal impacts or behaviors and do not account for agonistic qualities and characteristics of the various signals that would be introduced into the environment.

Response: NMFS does not agree with the commenter's claim that the impact models used in the DEIS are overly simplistic and unrepresentative. NMFS has responded to similar comments regarding the Navy's risk function analysis provided by Dr. David Bain in the Atlantic Fleet Active Sonar Training final rule (74 FR 4865) and refers readers to those comments and responses.

Comment 31: One commenter asserts that mid- and high-frequency sonar acoustic impact data on fish is lacking and does not justify the conclusion that impacts are "negligible or non-existent."

Response: Limited data exists on the effects of sound on fish, both in terms of number of well controlled studies and species tested. However, the vast majority of fish species studied to date are hearing generalists and cannot hear sounds above 500 to 1,500 Hz (0.5 to 1.5 kHz), depending on the species. Therefore, most fish are not likely to experience behavioral effects as a result of exposure to sonar because they cannot hear in that frequency range. Even for species that are capable of hearing above 1,500 Hz (1.5 kHz), their hearing in this range is poor compared to their sensitivity at lower frequencies. Moreover, even if a fish detects a mid- or high-frequency sound, masking of biologically relevant sounds is unlikely to occur since the vast majority of biologically relevant sounds for fish are below 1,000 Hz (1 kHz).

Comment 32: One commenter claims that the mortality "risk continuum" for fish due to explosives is inadequate and suspiciously biased to appear much more benign than it actually is. The conclusion in the DEIS section on fish admits that very little is known about impact of sonar, yet contradicts the summary table statement that "sonar used in Navy exercises would result in minimal harm to fish or EFH."

Response: The commenter refers to the Navy's analysis of potential impacts to fish and Essential Fish Habitat contained in the EIS. It is important to note that the analysis referred to was conducted in the context of the Magnuson-Stevens Fishery Conservation and Management Act, the ESA, and Executive Order 12114. The factors used to assess the significance of effects vary under these Acts, and are also different from those applied to the MMPA's effects analysis. The purpose of this comment period was for the public to provide comments on the proposed rule, which is being promulgated under the authority of the MMPA. In the Effects on Marine Mammal Habitat section of the proposed rule, NMFS discusses the effects on marine mammal food resources, including fish and invertebrates. Potential impacts to marine mammal food resources within the GoA TMAA are negligible given both the lack of hearing sensitivity to mid-frequency sonar, the very limited spatial and temporal scope of most Navy activities at sea including underwater detonations, and the high biological productivity of these resources. NMFS concludes that no short- or long-term effects to marine mammal food resources from Navy activities are anticipated within the GoA TMAA.

Comment 33: One commenter claims that the exposure risk models of marine mammals appear to contain many examples of "statistical manipulations of convenience" which erodes both the credibility of the models and the integrity of the entire DEIS.

Response: NMFS disagrees with the commenter's assertions. For example, the commenter takes issue with the density of species being presented in animals per km^2, which results in 0.0019 humpback whales per km^2, because there is no such thing as 0.0019 of a humpback whale. While the commenter is correct that there is no such thing as 0.0019 of a humpback whale, density is typically measured in terms of the number of animals per unit of area, which is usually per square kilometer or mile. In addition, the commenter asks whether setting the cutoff extent of the integral to 120 dB is based on either excluding the harbor porpoise from the marine mammal response data set or modifying the harbor porpoise risk function to a "heaviside step function." Harbor porpoise are found in coastal regions of northern temperate and subarctic waters (Reeves *et al.,* 2002). Generally, harbor porpoise are not found in water deeper than 100 m, and decline linearly as depth increases (Carretta *et al.,* 2001, Barlow 1988, Angliss and Allen 2009). A survey conducted in the GoA in June 2003 yielded a single sighting of two

individual harbor porpoises (Waite, 2003). The vessel survey conducted in April 2009 yielded 30 sightings of 89 harbor porpoise (Rone *et al.,* 2009). Based on their coastal distribution and limitation to shallower depths, it is unlikely that harbor porpoises would occur within the TMAA; therefore, there is no empirical density information for this species. The Navy used stock assessment information indicating an area for the GoA harbor porpoise stock of approximately 69,829 nm^2 (239,597 km^2) with an abundance of 41,854 animals. Assuming an even distribution of harbor porpoises in the GoA stock, there would be 2,719 harbor porpoises within the TMAA. While this figure is likely an overestimate, the Navy assumes for analysis purposes that 2,719 harbor porpoises will be exposed to Level B behavioral harassment.

Comment 34: One commenter claims that the model of bio-acoustic impact of explosives on marine mammals is overly simplistic because it models the animals as "linear input devices" and does not account for synergistic effects of stress on the animal or destruction of habitat and food sources.

Response: Although the Navy's model does not quantitatively consider the points raised by the commenter (because the quantitative data necessary to include those concepts in a mathematical model do not currently exist), NMFS and the Navy have qualitatively addressed these concerns in the effects analysis contained in the rule and EIS.

Comment 35: One commenter claims that NMFS dismisses effects of MFAS on fish because the Navy will be operating beyond the frequency that fish can hear, but does not take into account the effects of pressure from sound waves. The commenter further claims that NMFS cites one study on one species and references the lack of data on fish and exposure to sound, but goes on to make a broad assumption that no long-term negative effects will occur (75 FR 64508, p. 64562).

Response: In the Effects on Marine Mammal Habitat section, after some discussion, NMFS concludes that there "will be few, and more likely no, impacts on the behavior of fish from active sonar." NMFS also discusses the potential for both threshold shift and mortality to fish from MFAS, though we conclude that these impacts would be short-term (threshold shift) and insignificant to the population as a whole in light of natural daily mortality rates. As stated in the proposed rule, there are currently no well-established thresholds for estimating effects to fish from explosives other than mortality models. Fish that are located in the water column, in proximity to the source of detonation could be injured, killed, or disturbed by the impulsive sound and possibly leave the area. The huge variations in the fish population, including numbers, species, sizes, and orientation and range from the detonation point, make it very difficult to accurately predict mortalities at any specific site of detonation. Most fish species experience a large number of natural mortalities, especially during early life stages, and any small level of mortality caused by training exercises in the GoA TMAA involving explosives will likely be insignificant to the population as a whole.

Comment 36: One commenter claims NMFS cites an incident of damage to squid following airgun activity, but supports the position that the activity was "totally circumstantial" (75 FR 64508, p. 64563), thus participating in a Type II error. The commenter asserts that bias for the Navy on the part of NMFS is apparent.

Response: As stated in the proposed rule, the data presented showing damage to squid tissue is highly questionable since there was no way to differentiate between damage due to some external cause (*e.g.,* the seismic airgun) and normal tissue degradation that takes place after death, or due to poor fixation and preparation of tissue. To date, this work has not been published in peer reviewed literature, and detailed images of the reportedly damaged tissue are also not available.

Comment 37: One commenter expressed concern that NMFS did not account for non-Navy ships that may strike whales as they surface due to MFAS. This commenter further asserts that non-Navy ship traffic should not be excluded from consideration because they too pose a risk to marine mammals.

Response: NMFS appreciates the commenter's concern regarding the potential impacts of non-Navy vessel activity in the GoA; however, the non-Navy shipping traffic in the area falls outside of the scope of the proposed action that NMFS and the Navy analyzed as part of the proposed and final rulemaking process. For more information on non-Navy vessel activity, please refer to section 3.3 and section 4 of the Navy's EIS.

Under section 101(a)(5)(A) of the MMPA, NMFS prescribes regulations setting forth the permissible methods of taking pursuant to an activity *upon request* (emphasis added) by citizens of the United States. In this case, the Navy requested authorization from NMFS to permit the taking of marine mammals incidental to training activities in the GoA and NMFS, after determining that the total take during the 5-year period will have a negligible impact on marine mammals, has responded by prescribing regulations setting forth the permissible methods of taking pursuant to Navy training activities, and other means of effecting the least practicable adverse impact on marine mammals and their habitat.

Separately, non-Navy vessels are prohibited from taking marine mammals under section 101(a) of the MMPA. In addition, NMFS has regulations in effect that prohibit approaching within 100 yards (91.4 m) of a humpback whale in waters within 200 nm (370.4 km) of Alaska (50 CFR 224.103(b)). These regulations also require vessels to operate at a "slow safe speed" within proximity to a humpback whale. For other species or marine mammals in Alaskan waters, NMFS has guidelines that advise vessels to remain at least 100 yards (91.4 m) from marine mammals. The guidelines are available on the following Web site: *http://www.fakr.noaa.gov/protectedresources/mmv/guide.htm*. Guidelines and regulations are designed to prevent vessels from violating Federal law and to reduce the potential for inadvertently harming whales, dolphins, porpoises, seals and sea lions.

Comment 38: One commenter expressed concern that the speeds at which Navy ships travel (10–14 knots) increase the likelihood of ship strikes because NMFS has previously stated that speeds in excess of 10 knots cause fatalities in ship strike events.

Response: NMFS has analyzed the potential impacts from ship strikes in the proposed rule (75 FR 64508, pages 64540–64542) and includes mitigation measures to minimize the likelihood of ship strikes in the final rule (see § 218.124(a)(2)). Because of the relatively low density of Navy traffic in the GoA TMAA, the limited number of days that the Navy plans to conduct training activities in the GoA TMAA, the fact that there are no reports of Navy vessels striking a whale in the GoA, and the mitigation measures required under this final rule, NMFS does not believe that a vessel strike of a marine mammal is likely in the GoA TMAA.

Comment 39: One commenter claims that NMFS' authorization of lethal take of up to 15 beaked whales over the course of 5 years is unacceptable in the absence of scientific data about these animals in the GoA.

Response: NMFS appreciates the commenter's concern, but the MMPA directs NMFS to issue an incidental take authorization if certain findings can be made. Under the MMPA, NMFS must

make the decision of whether or not to issue an authorization based on the proposed action that the applicant submits. Any U.S. citizen (including the Navy) can request and receive an MMPA authorization as long as all of the necessary findings can be made. Both NMFS and the Navy have a responsibility to use the best available science to support our analyses and decisions under both the MMPA and NEPA. For example, in 2009, the Navy funded a baseline survey of the GoA to gather data on the distribution and density of marine mammals. The results from this survey, as well as other relevant literature presented in the LOA application and EIS, represent the best available science generated by the Navy and used by NMFS. As more surveys are conducted, data will be collected across additional months and areas (such as seamounts that are associated with the presence of beaked whales), which will allow for the calculation of more spatially and temporally explicit density estimates. In the meantime, the density estimates from the 2009 survey and other sources allow NMFS to make reasonable predictions regarding the number of marine mammals that might be exposed to particular levels of sound. In this case, NMFS has determined that the Navy's GoA TMAA exercises will have a negligible impact on the affected species or stock (including beaked whales) and, therefore, we plan to issue the requested MMPA authorization.

Comment 40: One commenter asks how NMFS can justify estimating takes using criteria that were developed based on assumptions about received levels of MFAS.

Response: The commenter misrepresents this discussion in the proposed rule. As discussed in the Acoustic Take Criteria section of the proposed rule, NMFS developed acoustic criteria that estimate at what received level (when exposed to MFAS/HFAS or explosive detonations) Level B Harassment, Level A Harassment, and mortality (for explosives) would occur. NMFS utilizes three acoustic criteria to assess impacts from MFAS/HFAS: PTS (injury—Level A Harassment), TTS (Level B Harassment), and behavioral harassment (Level B Harassment). A number of investigators have measured TTS in marine mammals. These studies measured hearing thresholds in trained marine mammals before and after exposure to intense sounds. Because PTS data do not currently exist for marine mammals (and are unlikely to be obtained due to ethical concerns), these levels are estimated using TTS data from marine mammals and relationships between TTS and PTS have been discovered through the study of terrestrial mammals. For behavioral harassment, NMFS uses acoustic risk continuum functions, which allow for probability of a response that NMFS would classify as harassment to occur over a range of possible received levels and assume that the probability of a response depends first on the "dose" (in this case, the received level of sound) and that the probability of a response increases as the "dose" increases. The Navy and NMFS have previously used acoustic risk functions to estimate the probable response of marine mammals to acoustic exposures for other training and research programs.

Comment 41: One commenter refers to NMFS' statement in the proposed rule that marine mammals that incur PTS due to approaching sonar sources may compensate, "although this may include energetic costs" and asserts that energetic costs can contribute to the decline of an animal's state of health, and that it is reasonable to assume that such costs could potentially lead to an animal's death.

Response: The commenter takes the statement quoted from the proposed rule out of context. First, in order to incur PTS a marine mammal would have to be within 10m of the sonar dome and NMFS believes that many animals would deliberately avoid exposing themselves to the received levels of active sonar necessary to induce injury by either moving away from the source or at least modifying their course to avoid a close approach. Second, in the unlikely event that an animal approaches the sonar vessel at close distance, NMFS believes that the mitigation measures (*i.e.,* shutdown/powerdown zones for MFAS/HFAS) would typically ensure that animals would not be exposed to injurious levels of sound. Third, if a marine mammal is able to approach a surface vessel within the distance necessary to incur PTS, the likely speed of the vessel (typically 10–12 knots) would make it very difficult for the animal to remain in range long enough to accumulate enough energy to result in more than a mild case of PTS. Fourth, although the Navy's modeling predicted that one Dall's porpoise would incur PTS from exposure to MFAS/HFAS, the Navy and NMFS believe this result is very unlikely to occur; therefore, the Navy has not requested authorization for takes by Level A Harassment and NMFS is not authorizing takes by Level A Harassment. Finally, although NMFS states that marine mammals may compensate for PTS, which may incur energetic costs, this would represent a worst case scenario that is unlikely to occur in the GoA TMAA because of the mitigation measures implemented to prevent animals from being exposed to injurious levels of sound. Therefore, NMFS determined that the impact to marine mammals from the Navy's activities cannot be reasonably expected to, and is not reasonably likely to, adversely affect the species or stock through effects on annual rates of recruitment or survival and concluded that the activity would have a negligible impact.

Comment 42: One commenter claims that NMFS' assertion that marine mammals will deliberately avoid exposing themselves to received levels of active sonar necessary to induce injury is not supported by available data and asks whether NMFS really believes this.

Response: See response to Comment 41 above.

Comment 43: One commenter claims NMFS assumes that marine mammals will not be exposed to sounds long enough to induce TTS, yet nothing is known about how marine mammals will respond to sound in the GoA. The commenter further claims that NMFS makes assumptions based on experiments, but the public does not know whether these experiments involved control, the number of test subjects, and other important information.

Response: The impacts of the Navy's training activities in the GoA have been analyzed in the Navy's DEIS and LOA application. A detailed description of the Navy's approach to analyzing the impacts on marine mammals is provided in Appendix D of the EIS and Appendix B of the LOA application. In the proposed rule, NMFS discusses the potential effects of Navy training activities, including active sonar, on marine mammals and refers to a number of studies that have measured TTS in marine mammals. These studies measured hearing thresholds in trained marine mammals before and after exposure to intense sounds. A detailed description of how the TTS criterion was derived from the results of these studies may be found in Chapter 3 of Southall *et al.* (2007), as well as the Navy's GoA TMAA LOA application.

Comment 44: One commenter expressed concern regarding NMFS' conclusion that the Navy activities would not be expected to occur in areas of reproduction, feeding, or other critical behaviors of beaked whales in light of lack of available information regarding these species in the GoA. This commenter expressed additional concern that NMFS mentions oceanic seamounts and submarine escarpments,

but fails to mention the effect of reverberating sound on beaked whales.

Response: The rule does not discount the potential impacts on beaked whales. NMFS specifically addresses the potential impacts to beaked whales in the following sections of the proposed rule: "Acoustically Mediated Bubble Growth;" "Behaviorally Mediated Responses to MFAS That May Lead to Stranding;" "Stranding and Mortality;" and "Association Between Mass Stranding Events and Exposure to MFAS." Specifically, in recognition of potential impacts to beaked whales and the scientific uncertainty surrounding their presence in the GoA and the exact mechanisms that lead to strandings, NMFS has authorized the mortality of 15 beaked whales over the course of 5 years in the unlikely event that a stranding occurs as a result of Navy training exercises. In addition, the commenter is misrepresenting a piece of the text from the proposed rule—although NMFS points out that the five factors that contributed to the stranding in the Bahamas are not all present in the GoA TMAA, we do not say that fact alone means strandings are unlikely to occur.

Comment 45: One commenter asks how NMFS can issue permits based on the best available data if NMFS admits that data does not exist on marine mammal behavioral response as a result of factors other than received levels of MFAS?

Response: NMFS relies on the best available date for analyzing the effects on marine mammals. However, because the best available data is constantly changing and our current knowledge of marine mammal behavioral response is limited, NMFS utilizes an adaptive management approach. In so doing, we are able to continuously assess behavioral effects and incorporate new mitigation or monitoring measures when necessary. NMFS never stated that data on factors other than received level is non-existent; but rather, that quantitative data on marine mammal behavioral response to factors other than received level does not exist. The proposed rule included a qualitative discussion of how factors other than received level (*e.g.,* speed, angle of approach) may impact a marine mammal's response to a sound source.

Comment 46: One commenter states that the proposed rule assumes that because stranding events have been low during 60 years of conducting MFAS/HFAS training exercises, they are not likely to occur, but unreported strandings and mortalities cannot be minimized since there was little to no oversight, mitigation, or reporting requirements during this period. Another commenter claims that, with respect to marine mammal injury/mortality stats, NMFS fails to account for whales that may sink to the bottom.

Response: The Navy has been conducting MFAS/HFAS training exercises throughout the world's oceans for over 60 years. Although the Navy has not conducted monitoring specifically in conjunction with training exercises in the past, people have been collecting data from stranded animals for approximately 30 years. In addition, although not all dead or injured animals are expected to end up on the shore (some may be eaten or float out to sea), one would expect that if marine mammals were being harmed by Navy training exercises with some regularity, more evidence would have been detected over the 30-year period.

Comment 47: One commenter states that NMFS' assumption that marine mammals will habituate to noise by comparing GoA to a different region is not a valid.

Response: In the proposed rule, NMFS stated that, "although the radiated sound from Navy vessels will be audible to marine mammals over a large distance, it is unlikely that animals will respond behaviorally (in a manner that NMFS would consider MMPA harassment) to low-level distant shipping noise as the animals in the area are likely to be habituated to such noises (Nowacek *et al.,* 2004)." Although Nowacek's study does not take place in the GoA, that does not change the fact that shipping currently occurs in the TMAA and the noise from Navy vessels should not cause a different reaction.

Comment 48: One commenter states that the studies NMFS cites on marine mammals in captivity to justify the assumption that marine mammals will avoid sound sources lack an adequate sample size, and asks if NMFS believes that these studies translate into the field with so many unknown variables, including lack of information about marine mammal behaviors in the GoA.

Response: The SSC Dataset (Controlled Laboratory Experiments with Odotocetes) is not the primary source of data for the behavioral harassment threshold; rather, it is one of three datasets (two of which are from wild species exposed to noise in the field) treated equally in the determination of the K value (equates to midpoint) of the behavioral risk function. NMFS recognizes that certain limitations may exist when one develops and applies a risk function to animals in the field based on captive animal behavioral data. However, we note that for the SSC Dataset: (1) Researchers had superior control over and ability to quantify noise exposure conditions; (2) behavioral patterns of exposed marine mammals were readily observable and definable; and (3) fatiguing noise consisted of tonal noise exposures with frequencies contained in the tactical MFAS bandwidth. NMFS does not ignore the deficiencies of these data, rather we weighed them against the value of the data and compared the dataset to the other available, applicable, and validated datasets and decided that the SSC dataset was one of the three appropriate datasets to use in the development of the risk function.

Monitoring and Reporting

Comment 49: One commenter claims that NMFS fails to define "Marine Species Awareness Training," and assumes that Navy personnel will be able to spot whales from the bridge, but does not include the sea state in their assertion. In addition, a similar comment claims that NMFS does not mention sea state when discussing the probability that watchstanders will likely observe whales.

Response: MSAT is a training course, intended for Navy Lookouts, designed to introduce marine mammal cues that may assist in avoiding potential collisions with whales during Navy activities. While NMFS does expect observers to see whales, we do not assume that observers will see every whale. NMFS recognizes that sea state affects visibility, which is why the Navy will increase survey efforts in the event of a Beaufort Sea State of 4 or above.

In response to the second part, the Navy's activities within the TMAA will occur during summer months, when Beaufort Sea State conditions are lower and visibility is better for monitoring. In addition to watchstanders, aerial surveys and passive acoustic monitoring (PAM) will also be used to observe for marine mammals. During sinking exercises (SINKEX), every attempt shall be made to conduct the exercise in sea states that are ideal for marine mammal sighting, Beaufort Sea State 3 or less. In the event of a 4 or above, survey efforts shall be increased within the 2 nm (3.7 km) zone around the target. This shall be accomplished through the use of an additional aircraft, if available, and by conducting tight search patterns.

Comment 50: One commenter states that NMFS fails to define "highly qualified and experienced observers of the marine environment" (75 FR 64508, p. 64543) and who will train them.

Response: NMFS explained in the proposed rule that Navy Lookouts, also referred to as "watchstanders," are highly qualified and experienced

observers of the marine environment. All Lookouts take part in Marine Species Awareness Training so that they are better prepared to spot marine mammals. Their duties also require that they report all objects sighted in the water, not just marine mammals, that may be indicative of a threat to the vessel and its crew. Lookouts are stationed day and night whenever a ship or surfaced submarine is moving through the water.

Comment 51: One commenter states that NMFS fails to define "most effective means to ensure quick and effective communication within the command structure in order to facilitate implementation of protective measures if marine species are spotted" (75 FR 64508, p. 64543).

Response: As previously stated, all Navy Lookouts undergo Marine Species Awareness Training. The Navy is responsible for deciding the most effective means of communicating information within the command structure. This is the same "quick communication" that Lookouts rely on to notify the captain that there is something in the vessel's path. NMFS does not define this means of rapid communication, because it is different for each vessel and best determined by Navy operators.

Comment 52: One commenter claims that NMFS fails to fully describe how they and the Navy plan to integrate results from monitoring data for the public and other interested entities.

Response: The Navy's annual monitoring reports will be available for public viewing on NFMS' Web site (*http://www.nmfs.noaa.gov/pr/permits/incidental.htm*). The Navy is in the process of making some of their data available through an on-line database.

Comment 53: One commenter asks if marine mammal observers will be aboard to watch for adverse effects. The commenter further asks whether sonar training is halted if observers note negative impacts from the training?

Response: As stated in the proposed rule, marine mammal observers and Navy Lookouts will be used to monitor for marine mammals before, during, and after training events. Should a marine mammal enter an exclusion zone, mitigation measures will be implemented. For example, the Navy will powerdown and shutdown sonar emitting devices when marine mammals are detected within ranges where the received sound level is likely to result in temporary threshold shift (TTS) or injury. In addition, the Navy and NMFS have a stranding response plan for the GoA that will be implemented in the event of a marine mammals stranding, which includes a shutdown requirement in the event of a live stranding. Furthermore, the rule includes an adaptive management component that allows for timely modification of mitigation or monitoring measures based on new information, when appropriate.

Comment 54: One commenter states that NMFS asserts that little is known about how marine mammals will react to sonar in the GoA, but mentions the Navy's claim that no marine mammals have been harassed in other training ranges, which the commenter believes should be a red flag that the Navy's monitoring system is not effective and asks what is the probability that zero marine mammals will be harassed during training exercises that occur year round?

Response: The Navy's LOA application and EIS clearly discuss the potential adverse effects (harassment) that marine mammals may experience when exposed to MFAS/HFAS and explosive detonations. The Navy has and will continue to work as an active partner to investigate the extent and severity of the impacts and how to reduce them (see Research section of this final rule). Regarding the issue of monitoring being effective, nowhere does either the Navy or NMFS indicate that the current monitoring (and associated mitigation) will eliminate impacts. The MMPA requires that NMFS put forth the means of effecting the least practicable adverse impacts, and NMFS has determined that the required mitigation and associated monitoring (meaning specifically the mitigation monitoring) measures accomplish this. If it were possible to eliminate impacts to marine mammals, an MMPA authorization would not be necessary.

Comment 55: The MMC and other commenters recommend that NMFS require the Navy to conduct seasonal, systematic vessel or aerial line-transect surveys supplemented with passive acoustic monitoring and satellite tracking to provide the data needed to describe marine mammal density, distribution, and habitat use during the seasons and in the regions when and where the Navy plans to conduct its exercises.

Response: NMFS agrees and has recommended that the Navy refocus their Monitoring Plan for the GoA TMAA. In 2011 and 2012, the Navy plans to deploy two PAM devices in the GoA TMAA to detect, locate, and potentially track vocalizing marine mammals, as well as provide seasonal estimates of presence/absence. These devices will be deployed year-round, including during Navy training events. Given the potential sea states and ocean conditions during both winter and summer, and the relatively infrequent Navy presence in the GoA TMAA, PAM represents the best long-term monitoring technique to employ within the GoA TMAA. In addition to collecting marine mammal vocalization and echolocation data before, during, and after any Navy training event, information from which NMFS can infer to whether the training event has an effect or no effect on observed vocalizations.

In response to public comment, the Navy has modified their monitoring plan such that in either 2013 or 2014, instead of deploying the PAM devices as originally planned, the Navy will conduct a survey using a visual method (most likely vessel survey), which will augment the data gathered by the PAM devices. The PAM devices will be deployed in whichever year (2013 or 2014) the visual survey is not conducted. An alternate survey technique would ideally be part of a larger focused effort during the same time period, in coordination with other agencies or research organizations working in the area. While the exact extent and technique to be employed is still to be determined (*e.g.,* including but not limited to visual surveys), monitoring in 2013 and 2014 is expected to receive the same level of fiscal and logistical support as the 2011–2012 efforts.

Comment 56: The MMC recommended that NMFS extend the required monitoring period to at least one hour before the resumption of training exercises when an animal has been sighted within the safety zone and after power-down and shut-down of active sonar sources.

Response: NMFS does not concur with the MMC that we should expand the delay (until sonar can be restarted after a shutdown due to a marine mammal sighting) to one hour for the following reasons:

- The ability of an animal to dive for extended periods (*i.e.,* greater than 30 minutes) does not mean that it will always do so. Therefore, the one hour delay would only potentially add value in instances when animals have remained under water for more than 30 minutes.
- Navy vessels typically move at speeds of 10–12 knots (5–6 m/sec) when operating active sonar and potentially much faster when not. Fish *et al.* (2006) measured speeds of 7 species of odontocetes and found that they ranged from 1.4–7.30 m/sec. Even if a vessel moves at the slower of the typical speeds associated with active sonar use,

an animal would need to be swimming near sustained maximum speed for an hour in the direction of the vessel's course to stay within the safety zone of the vessel. Increasing the typical speed associated with active sonar use would further narrow the circumstances in which the one hour delay would add value.

• Additionally, the times when animals are underwater for longer periods of time (*i.e.,* deep-diving) are the same times that a large portion of their motion is in the vertical direction, which means that they are far less likely to keep pace with a vessel moving horizontally across the surface.

• Given that the animal would need to have stayed in the immediate vicinity of the sound source for an hour and, considering the maximum area that both the vessel and the animal could cover in an hour, it is improbable that this would randomly occur. Moreover, considering that many animals have been shown to avoid both acoustic sources and ships without acoustic sources, it is improbable that a deep-diving cetacean (as opposed to a dolphin that might bow-ride) would choose to remain in the immediate vicinity of the source. NMFS believes that it is unlikely that a single cetacean would remain in the safety zone of a Navy sound source for up to one hour.

Comment 57: The MMC recommended that NMFS require all members of the Navy's mitigation teams to complete the marine mammal training program (*i.e.,* the NMFS-approved Marine Species Awareness Training) before they participate in any training activities.

Response: The Navy has Lookouts stationed onboard ships whose primary duty is to detect objects in the water, estimate their distance from the ship, and identify them as any of a number of inanimate or animate objects that are significant to a Navy exercise or as a marine mammal so that the mitigation measure can be implemented. Navy Lookouts undergo extensive training to learn these skills and the Marine Species Awareness Training is used to augment it with some information specific to marine mammals that will make them aware of some of the cues that they may not otherwise have learned and may contribute to their collection of slightly more accurate and descriptive information in their reports. However, Lookouts are not expected to identify marine mammals to species and they are not expected to provide in-depth behavioral or status information on marine mammals.

Comment 58: The MMC recommended that NMFS require the Navy to use a sufficient level of monitoring during all training activities to ensure that marine mammals are not being taken in unanticipated ways or numbers.

Response: There are two different types of monitoring required pursuant to the GoA TMAA. One type is outlined in the Monitoring Plan, which consists of different monitoring methods designed to address a series of focused study questions and is conducted by Marine Mammal Observers (MMOs).

The second type of monitoring is routinely conducted by Navy Lookouts on surface vessels (and opportunistically by personnel on other platforms). This monitoring is used to detect animals so the necessary mitigation measure can be implemented. Behavioral data that allow for a general assessment of the impacts are collected with other information (such as the status of sonar sources), which help verify the Navy's implementation of the appropriate mitigation measure. This data-gathering requirement is described in more detail in § 218.125 of the regulatory text entitled "Requirements for monitoring and reporting."

Comment 59: One commenter asked if there are plans for any long-term monitoring (1–2 years) of marine mammals after the training activities take place.

Response: In 2011 and 2012, the Navy plans to deploy two passive acoustic monitoring (PAM) devices in the GoA TMAA to detect, locate, and potentially track vocalizing marine mammals, as well as provide seasonal estimates of presence/absence. These devices will be deployed year-round, including during Navy training events. Given the potential sea states and ocean conditions during both winter and summer, and the relatively infrequent Navy presence in the GoA TMAA, PAM represents the best long-term monitoring technique to employ within the GoA TMAA. In addition to collecting marine mammal vocalization and echolocation data before, during, and after any Navy training event, information can be inferred as to whether the training event has an effect or no effect on observed vocalizations.

In response to public comment, the Navy has modified their mitigation plan such that in either 2013 or 2014, instead of deploying the PAM devices as originally planned, the Navy will conduct a survey using a visual method (most likely, vessel survey), which will augment the data gathered by the PAM devices. The PAM devices will be deployed in whichever year (2013 or 2014) the visual survey is not conducted. An alternate survey technique would ideally be part of a larger focused effort during the same time period in coordination with other agencies or research organizations working in the area. While the exact extent and technique to be employed is still to be determined (*e.g.,* including but not limited to visual surveys), monitoring in 2013 and 2014 is expected to receive the same level of fiscal and logistic support as the 2011–2012 efforts.

Comment 60: One commenter expressed concern over marine mammals potentially leaving Alaskan waters to avoid the exposure to sound and asks if marine mammals will be tagged/tracked to see how the Navy's activities will affect them.

Response: Currently, there are no plans to conduct tagging/tracking studies in the GoA TMAA. At this point, NMFS feels it is more important to improve our understanding of the presence, density, and abundance of marine mammal species in the area. Therefore, the focus will be on deploying PAM devices—two long-term deployments in 2011 and 2012—and either additional visual surveys or long-term deployments of PAMs in 2013 and 2014. A monitoring study for 2015 will be determined after adaptive management review, which NMFS has incorporated into the GoA TMAA rule and that allows for yearly review of Navy monitoring and current science that could influence (allow for the potential modification of) monitoring and mitigation measures in subsequent LOAs, if appropriate. Separately, the Navy has voluntarily developed and funded a number of research plans that are designed to address technologies to reduce the impacts of active acoustic sources on marine mammals (see Research section).

Subsistence Harvest of Marine Mammals

Comment 61: One commenter claims that even if Alutiiq, Eyak, and Tlingnit Tribes do not use the GoA TMAA for subsistence use, the animals used by these Tribes for traditional subsistence do. This commenter further requested that NMFS make public the letters that the consulted Tribes provided on the Navy's GoA TMAA DEIS.

Response: NMFS agrees that marine mammals that occur within the GoA TMAA are those that may be taken for subsistence use; however, the activities in the TMAA do not overlap in space or time with any subsistence hunts and should not directly impact any subsistence hunts through: Causing abandonment of locations where

subsistence use takes place; displacing subsistence users; or placing physical barriers between marine mammals and hunters. Any effects on marine mammals within the TMAA are likely to be behavioral in nature and temporary in duration and NMFS' negligible impact determination further supports the finding that the Navy training activities will not have an unmitigable adverse impact on the availability of marine mammal species or stocks for taking for subsistence uses.

With respect to the second point, pursuant to the Navy's American Indian/Alaskan Native policy, letters were sent to 12 local Tribes. These letters provided the Navy's preliminary determination that potential protected Tribal resources may be affected, but not adversely affected by Navy training activities in the GoA TMAA. The Navy asked whether the training activities would significantly affect any Tribal rights or protected Tribal resources, requested a reply, and invited consultation on a Government-to-Government basis. These letters and the written responses, if any, will be provided in Navy's Final EIS.

Comment 62: One commenter took issue with NMFS' claim that no Tribes around the GoA had concerns with the Navy's DEIS and assert that their Tribe (Tlingit) protested the Navy's plans to conduct training exercises in an area where their subsistence animals are known to migrate, feed, reproduce, *etc.*

Response: NMFS was unaware that the Tlingit protested the Navy's plans to conduct training in the GoA TMAA. Under the MMPA, in order to issue regulations authorizing the taking of marine mammals incidental to the Navy's training activities, NMFS must find that the total taking during the 5-year period will have a negligible impact on the affected marine mammal species or stocks and will not have an unmitigable adverse impact on the availability of such species or stock for taking for subsistence use. NMFS has made this determination and prescribed regulations setting forth the permissible method of taking, and other means of effecting the least practicable adverse impact on marine mammal species or stocks and their habitat, and on the availability of such species or stocks for subsistence use.

With respect to the EIS process, on April 18, 2008, the Navy sent a letter to the Yakutat Tlingit Tribe, asking if the proposed EIS would have a significant impact on any of the Tribal rights or resources, and therefore require formal Government-to-Government consultation. On June 4, 2008, via phone call, the Alaska Command (ALCOM) Native Liaison confirmed that the Yakutat Tlingit Tribe did not want to initiate formal Government-to-Government consultation with the Navy on the Gulf of Alaska Navy Training Activities EIS and the proposal would not have any significant impact on a Tribal right or resource. The Tribe was also sent a letter by Commander, U.S. Pacific Fleet on December 7, 2009 with a full hard copy of the Draft EIS, asking for their input and comments. No comments from the Tribe were received by the Navy on the Draft EIS.

Other

Comment 63: One commenter states that the Navy has recently expanded ASW training areas in multiple range complexes, and claims that adding the GoA is not justified by any scarcity of other training areas.

Response: As stated in the Navy's EIS, the location, oceanographic conditions, and area of training space make the TMAA (and Alaska Training Area components) a unique and strategically important training venue for the Navy. Furthermore, the GoA is not a recent expansion; the Navy has been training in this area for over 30 years.

Comment 64: Several commenters claim that there was a lack of alternatives analysis and establishment of protection areas in Navy's DEIS.

Response: Several comments were received that relate to the Navy's DEIS. The purpose of this comment period was for the public to provide comments on NMFS' proposed rule. Responses were not provided to comments on the EIS if their bearing on the MMPA authorization was not clear.

Comment 65: One commenter states that NMFS mentions a Memorandum of Understanding between NMFS and the Navy, but the document is apparently not ready, and asks how NMFS can make a determination on this request to take marine mammals when all of the documents are not in place for public review.

Response: NMFS and the Navy are still working on this document, but it is not intended for public review because it is an internal, interagency letter that pertains to coordination and cooperation between the two agencies.

Comment 66: Multiple commenters expressed general opposition to Navy activities and NMFS' issuance of an MMPA authorization, citing general concerns about the health and welfare of marine mammals.

Response: NMFS appreciates the commenters' concern for the marine mammals that live in the area of the Navy's training activities. The MMPA directs NMFS to issue an incidental take authorization if certain findings can be made. NMFS has determined that the Navy's GoA TMAA exercises will have a negligible impact on the affected species or stocks. Additionally, NMFS has worked with the Navy to develop mitigation measures that help minimize the impacts to marine mammals and a monitoring plan that will increase our understanding of the marine mammals in the area and guide their responses in the presence of marine mammals. Therefore, NMFS issues the necessary governing regulations and plans to issue the requested MMPA authorization.

Estimated Take of Marine Mammals

As mentioned previously, one of the main purposes of NMFS' effects assessments is to identify the permissible methods of taking, meaning: The nature of the take (*e.g.,* resulting from anthropogenic noise vs. from ship strike, *etc.*); the regulatory level of take (*i.e.,* mortality vs. Level A or Level B harassment); and the amount of take. The Potential Effects section identified the lethal responses, physical trauma, sensory impairment (permanent and temporary threshold shifts and acoustic masking), physiological responses (particular stress responses), and behavioral responses that could potentially result from exposure to MFAS/HFAS or underwater explosive detonations. This section will relate the potential effects to marine mammals from MFAS/HFAS and underwater detonation of explosives to the MMPA statutory definitions of Level A and Level B Harassment and attempt to quantify the effects that might occur from the specific training activities that the Navy is proposing in the GoA TMAA.

In the Estimated Take of Marine Mammals section of the proposed rule, NMFS related the potential effects to marine mammals from MFAS/HFAS and underwater detonations (discussed in the Potential Effects of Specified Activities on Marine Mammals section) to the MMPA statutory definitions of Level A and Level B Harassment and quantified (estimated) the effects on marine mammals that could result from the specific activities that the Navy intends to conduct. The subsections of that analysis are discussed individually below.

Definition of Harassment

The Definition of Harassment section of the proposed rule contains the definitions of Level A and Level B Harassment, and a discussion of which of the previously discussed potential effects of MFAS/HFAS or explosive detonations fall into the categories of

Level A Harassment (permanent threshold shift (PTS), acoustically mediated bubble growth, behaviorally mediated bubble growth, and physical disruption of tissues resulting from explosive shock waves) or Level B Harassment (temporary threshold shift (TTS), acoustic masking and communication impairment, and behavioral disturbance rising to the level of harassment). See 75 FR 64508, pages 64552–64554. No changes have been made to the discussion contained in this section of the proposed rule.

Acoustic Take Criteria

In the Acoustic Take Criteria section of the proposed rule, NMFS described the development and application of the acoustic criteria for both MFAS/HFAS and explosive detonations (75 FR 64508, pages 64554–64562). No changes have been made to the discussion contained in this section of the proposed rule.

Estimates of Potential Marine Mammal Exposure

The proposed rule describes in detail how the Navy estimated the take that will result from their proposed activities (75 FR 64508, pages 64559–64560), which entails the following three general steps: (1) A propagation model estimates animals exposed to sources at different levels; (2) further modeling determines the number of exposures to levels indicated in criteria above (*i.e.,* number of takes); and (3) post-modeling corrections refine estimates to make them more accurate. More information regarding the models used, the assumptions used in the models, and the process of estimating take is available in Appendix B of the Navy's application or Appendix D of the Navy's DEIS for the GoA TMAA.

Table 5, which is identical to Table 8 in the proposed rule with a few minor corrections, indicates the number of takes that were modeled and that are being authorized annually or biennially incidental to the Navy's activities, with the following allowances. The Navy has carefully characterized the training activities planned for the GoA TMAA over the 5 years covered by these regulations; however, evolving real-world needs necessitate flexibility in annual activities, which in turn is reflected in the annual variation in the potential take of marine mammals. NMFS has included language bounding this flexibility in the regulatory text (see § 218.122(c)). These potential annual variations were considered in the negligible impact analysis and the analysis in the proposed rule remains applicable. This language indicates that after-action modeled annual takes (*i.e.,* based on the activities that were actually conducted and which must be provided with the LOA application) of any individual species may vary, but will not ultimately exceed the indicated 5 year total for that species by more than 10 percent and will not exceed the indicated annual total by more than 25 percent in any given year; and that modeled total yearly take of all species combined may vary, but may not exceed the combined amount indicated below in any given year by more than 10 percent.

BILLING CODE 3510–22–P

Species	Modeled Sonar Exposures to Indicated Thresholds			Modeled Explosive Exposures to Indicated Thresholds				NMFS Annual Take Authorization		
	Level B Exposures		Level A Exposures (PTS)	Level B Exposures		Level A Exposures	Mortality			
	Risk Function (Behavioral)	TTS		Sub-TTS	TTS			Level B Harassment	Level A Harassment	Mortality
ESA Species										
Blue whale	1	0	0	1	0	0	0	2		
Fin whale	10,998	21	0	13	5	0	0	11,037		
Humpback whale	1,388	6	0	1	0	0	0	1,395		
North Pacific right whale	1	0		1	0	0	0	2		
Sei whale	4	0	0	4	0	0	0	8		
Sperm whale	327	1	0	1	0	0	0	329		
Stellar sea lion	11,104	1	0	2	1	0	0	11,108		
Mysticetes										
Gray whale	384	1	0	3	0	0	0	388		
Minke whale	677	2	0	2	0	0	0	681		
Odontocetes										
Baird's beaked whale	485	1	0	1	0	0	0	487	15 over the couse of 5-yr rule	
Stejneger's beaked whale	2,302	6	0	3	1	0	0	2,312		
Cuvier's beaked whale	2,302	6	0	3	1	0	0	2,312		
Dall's porpoise	205,485	768	0	84	37	2	1	206,374		
Harbor porpoise	5,438	0	0	2	0	0	0	5,440		
Killer whale	10,602	41	0	4	2	0	0	10,649		
Pacific white-sided dolphin	16,912	61	0	12	6	1	0	16,991		
Pinnipeds										
California sea lion	1	0	0	1	0	0	0	2		
Harbor seal	1	0	0	1	0	0	0	2		
Northern elephant seal	2,064	0	0	4	1	0	0	2,069		
Northern fur seal	154,144	16	0	26	16	1	0	154,202		
Total	**424,620**	**931**	**0**	**169**	**70**	**4**	**1**	**425,790**	**15**	**2,128,965**

Table 5. Navy's estimated marine mammal exposures to the thresholds and NMFS take authorization.

BILLING CODE 3510–22–C

Mortality

Evidence from five beaked whale strandings, all of which have taken place outside the GoA TMAA, and have occurred over approximately a decade, suggests that the exposure of beaked whales to MFAS in the presence of certain conditions (*e.g.,* multiple units using active sonar, steep bathymetry, constricted channels, strong surface ducts, *etc.*) may result in strandings, potentially leading to mortality. Although not all five of these physical factors believed to have contributed to the likelihood of beaked whale strandings are present, in their aggregate, in the GoA TMAA, scientific uncertainty exists regarding what other factors, or combination of factors, may contribute to beaked whale strandings. Accordingly, to allow for scientific uncertainty regarding contributing causes of beaked whale strandings and the exact behavioral or physiological mechanisms that can lead to the ultimate physical effects (stranding and/or death), the Navy has requested authorization for (and NMFS authorizes) take of beaked whales, by injury or mortality. Although NMFS authorizes take by injury or mortality of up to 15 beaked whales over the course of the 5-year regulations, the Navy's model did not predict any injurious takes of beaked whales would occur and neither NMFS nor the Navy anticipates that marine mammal strandings or mortality will result from the operation of MFAS during Navy exercises within the GoA TMAA.

Effects on Marine Mammal Habitat

NMFS' proposed rule includes a section that addresses the effects of the Navy's activities on Marine Mammal Habitat (75 FR 64508, pages 64562–64564). The analysis preliminarily concluded that the Navy's activities would have minimal effects on marine mammal habitat. No changes have been made to the discussion contained in this section of the proposed rule and NMFS has concluded there would be minimal effects on marine mammal habitat.

Analysis and Negligible Impact Determination

Pursuant to NMFS' regulations implementing the MMPA, an applicant for an LOA is required to estimate the number of animals that will be "taken" by the specified activities (*i.e.,* takes by harassment only, or takes by harassment, injury, and/or death). This estimate informs the analysis that NMFS must perform to determine whether the activity will have a "negligible impact" on the affected species or stock. Level B (behavioral) harassment occurs at the level of the individual(s) and does not assume any resulting population-level consequences, though there are known avenues through which behavioral disturbance of individuals can result in population-level effects (*e.g.,* pink-footed geese (*Anser brachyrhynchus*) in undisturbed habitat gained body mass and had about a 46-percent reproductive success compared with geese in disturbed habitat (being consistently scared off the fields on which they were foraging) which did not gain mass and has a 17-percent reproductive success). A negligible impact finding is based on the lack of likely adverse effects on annual rates of recruitment or survival (*i.e.,* population-level effects). An estimate of the number of Level B harassment takes, alone, is not enough information on which to base an impact determination. In addition to considering estimates of the number of marine mammals that might be "taken" through behavioral harassment, NMFS must consider other factors, such as the likely nature of any responses (their intensity, duration, *etc.*), the context of any responses (critical reproductive time or location, migration, *etc.*), as well as the number and nature of estimated Level A Harassment takes, the number of estimated mortalities, and effects on habitat. Generally speaking, and especially with other factors being equal, the Navy and NMFS anticipate more severe effects from takes resulting from exposure to higher received levels (though this is in no way a strictly linear relationship throughout species, individuals, or circumstances) and less severe effects from takes resulting from exposure to lower received levels.

In the Analysis and Negligible Impact Determination section of the proposed rule, NMFS addressed the issues identified in the preceding paragraph in combination with additional detailed analysis regarding the severity of the anticipated effects, and including species (or group)-specific discussions, to preliminarily determine that Navy training will have a negligible impact on the marine mammal species and stocks present in the GoA TMAA. No changes have been made to the discussion contained in the proposed rule (75 FR 64508, pages 64564–64574).

Determinations

Negligible Impact

Based on the analysis contained here and in the proposed rule (and other related documents) of the likely effects of the specified activity on marine mammals and their habitat and dependent upon the implementation of the mitigation and monitoring measures, NMFS finds that the total taking from Navy training exercises utilizing MFAS/HFAS and underwater explosives in the GoA TMAA will have a negligible impact on the affected species or stocks. NMFS issues regulations for these exercises that prescribe the means of effecting the least practicable adverse impact on marine mammals and their habitat and set forth requirements pertaining to the monitoring and reporting of that taking.

Subsistence Harvest of Marine Mammals

NMFS has determined that the issuance of 5-year regulations and subsequent LOAs for Navy training exercises in the GoA TMAA would not have an unmitigable adverse impact on the availability of the affected species or stocks for subsistence use. The Tribes nearest the GoA TMAA include the Alutiiq, Eyak, and Tlingit groups; however, these Tribes do not use the TMAA for subsistence. In March 2008, the Navy sent letters to 12 Tribes, including those listed above, with the assistance of the Alaskan Command's Tribal liaison, requesting Government-to-Government consultation pursuant to Executive Order 13175. None of the 12 Tribes indicated that they desired consultation on the proposed action. All 12 Tribes were also provided a copy of the GoA TMAA DEIS for review and comment. Comments on the DEIS were received from the Eyak, Afognak, and Shoonaq' Tribes. The Navy will continue to keep the Tribes informed of the timeframes of future joint training exercises.

ESA

There are eight marine mammal species under NMFS' jurisdiction that are listed as endangered or threatened under the ESA with confirmed or possible occurrence in the TMAA: Cook Inlet beluga whale, North Pacific right whale, humpback whale, sei whale, fin whale, blue whale, sperm whale, and Steller sea lion. Typically, the Cook Inlet beluga whale does not leave Cook Inlet, which is approximately 70 nm (129.6 km) from the nearest edge of the TMAA. Based on this information, Cook Inlet beluga whales are considered extralimital to the TMAA, were not considered further for analysis under the MMPA and the Navy concluded that their activities will have no effect on Cook Inlet beluga whales. Pursuant to section 7 of the ESA, the Navy has consulted with NMFS on this action. NMFS has also consulted internally on the issuance of regulations under

section 101(a)(5)(A) of the MMPA for this activity. The Biological Opinion concludes that the Navy's activities in the GoA TMAA and NMFS' issuance of these regulations are not likely to jeopardize the continued existence of threatened or endangered species under NMFS jurisdiction or destroy or adversely modify any designated critical habitat.

NEPA

NMFS participated as a cooperating agency on the Navy's Final Environmental Impact Statement (FEIS) for the GoA TMAA. NMFS subsequently adopted the Navy's FEIS for the purpose of complying with the MMPA.

Classification

This action does not contain any collection of information requirements for purposes of the Paperwork Reduction Act.

The Office of Management and Budget has determined that this rule is not significant for purposes of Executive Order 12866.

Pursuant to the Regulatory Flexibility Act (RFA), the Chief Counsel for Regulation of the Department of Commerce certified at the proposed rule stage to the Chief Counsel for Advocacy of the Small Business Administration that this rule will not have a significant economic impact on a substantial number of small entities. The RFA requires Federal agencies to prepare an analysis of a rule's impact on small entities whenever the agency is required to publish a notice of proposed rulemaking. However, a Federal agency may certify, pursuant to 5 U.S.C. 605 (b), that the action will not have a significant economic impact on a substantial number of small entities. During the public comment period, NMFS did not receive any comments related to this certification. The Navy is the sole entity that will be affected by this rulemaking, not a small governmental jurisdiction, small organization, or small business, as defined by the RFA. Any requirements imposed by a Letter of Authorization issued pursuant to these regulations, and any monitoring or reporting requirements imposed by these regulations, will be applicable only to the Navy. NMFS does not expect the issuance of these regulations or the associated LOAs to result in any impacts to small entities pursuant to the RFA. Because this action will directly affect the Navy and not a small entity, NMFS concludes the action will not result in a significant economic impact on a substantial number of small entities.

The Assistant Administrator for Fisheries has determined that there is good cause under the Administrative Procedure Act (5 U.S.C. 553(d)(3)) to waive the 30-day delay in effective date of the measures contained in the final rule. The Navy is the entity subject to the regulations and has informed NMFS that, due to unforeseen delays in publishing the Final EIS and in the interest of national security and homeland defense, it is imperative that these measures go into effect upon publication so that the LOA can be issued on or before June 1, 2011. The Navy has a compelling reason to conduct military readiness activities in the GoA TMAA without suspension or interruption. As discussed below, suspension/interruption of the Navy's ability to conduct training activities disrupts adequate and realistic testing of military equipment, vehicles, weapons, and sensors for proper operation and suitability for combat essential to our national security.

In order to meet its national security objectives, the Navy must continually maintain its ability to operate in a challenging at-sea environment, conduct military operations, control strategic maritime transit routes and international straits, and protect sea lines of communications that support international commerce. To meet these objectives, the Navy must develop and maintain proficiency with current and emerging defense systems by establishing and executing training programs, including at-sea training and exercises, and ensuring naval forces have access to the ranges, operating areas, and airspace needed to develop and maintain the skills for conducting naval activities. Such training is critical to achieving the level of certification, proficiency, and readiness needed to ensure that naval forces are combat-ready.

The training requirements are designed to provide the experience and familiarity needed to properly prepare U.S. Sailors and Marines for operational success. The Navy has identified and scheduled training in the Gulf of Alaska for the purpose of acquiring combat-ready certification for the fleet forces assigned to the GoA TMAA. Delays in training and evaluation affects the Navy's ability to meet its statutory mission to deploy worldwide naval forces equipped to meet existing and emergent threats. Although a 30-day delay may not affect specific training events, it will delay the effective date of the final rule, and thus could affect planning for future needs and emergent training which cannot be anticipated.

Waiver of the 30-day delay of the effective date of the final rule is in the public interest because it will allow the Navy to conduct training activities essential to homeland defense and national security, and to put capability into the hands of U.S. Sailors and Marines quickly.

List of Subjects in 50 CFR Part 218

Exports, Fish, Imports, Incidental take, Indians, Labeling, Marine mammals, Navy, Penalties, Reporting and recordkeeping requirements, Seafood, Sonar, Transportation.

Dated: April 25, 2011.

Samuel D. Rauch III,

Deputy Assistant Administrator for Regulatory Programs, National Marine Fisheries Service.

For reasons set forth in the preamble, 50 CFR part 218 is amended as follows:

PART 218—REGULATIONS GOVERNING THE TAKING AND IMPORTING OF MARINE MAMMALS

■ 1. The authority citation for part 218 continues to read as follows:

Authority: 16 U.S.C. 1361 *et seq.*

■ 2. Subpart N is added to part 218 to read as follows:

Subpart N—Taking and Importing Marine Mammals; Gulf of Alaska Temporary Maritime Activities Area (GoA TMAA)

Sec.
218.120 Specified activity and geographical area.
218.121 Effective dates.
218.122 Permissible methods of taking.
218.123 Prohibitions.
218.124 Mitigation.
218.125 Requirements for monitoring and reporting.
218.126 Applications for Letters of Authorization.
218.127 Letters of Authorization.
218.128 Renewal of Letters of Authorization and adaptive management.
218.129 Modifications to Letters of Authorization.

Subpart N—Taking and Importing Marine Mammals; Gulf of Alaska Temporary Maritime Activities Area (GoA TMAA)

§ 218.120 Specified activity and geographical area.

(a) Regulations in this subpart apply only to the U.S. Navy for the taking of marine mammals that occurs in the area outlined in paragraph (b) of this section and that occur incidental to the activities described in paragraph (c) of this section.

(b) The taking of marine mammals by the Navy is only authorized if it occurs within the Gulf of Alaska Temporary

Maritime Activities Area (GoA TMAA) (as depicted in Figure 1–1 in the Navy's application for GoA TMAA), which is bounded by a hexagon with the following six corners: 57°30′ N. lat., 141°30′ W. long.; 59°36′ N. lat., 148°10′ W. long.; 58°57′ N. lat., 150°04′ W. long.; 58°20′ N. lat., 151°00′ W. long.; 57°16′ N. lat., 151°00′ W. long.; and 55°30′ N. lat., 142°00′ W. long.

(c) The taking of marine mammals by the Navy is only authorized if it occurs incidental to the following activities:

(1) The use of the following mid-frequency active sonar (MFAS) sources, high-frequency active sonar (HFAS) sources, or similar sources for Navy training activities (estimated amounts below):

(i) AN/SQS–53 (hull-mounted active sonar)—up to 2,890 hours over the course of 5 years (an average of 578 hours per year);

(ii) AN/SQS–56 (hull-mounted active sonar)—up to 260 hours over the course of 5 years (an average of 52 hours per year);

(iii) AN/SSQ–62 (Directional Command Activated Sonobuoy System (DICASS) sonobuoys)—up to 1,330 sonobuoys over the course of 5 years (an average of 266 sonobuoys per year);

(iv) AN/AQS–22 (helicopter dipping sonar)—up to 960 "dips" over the course of 5 years (an average of 192 "dips" per year);

(v) AN/BQQ–10 (submarine hull-mounted sonar)—up to 240 hours over the course of 5 years (an average of 48 hours per year);

(vi) MK–48 (torpedo)—up to 10 torpedoes over the course of 5 years (a maximum of 2 torpedoes per year);

(vii) AN/SSQ–110A (IEER)—up to 400 buoys deployed over the course of 5 years (an average of 80 per year maximum combined use of AN/SSQ–110A or AN/SSQ–125);

(viii) AN/SSQ–125 (MAC)—up to 400 buoys deployed over the course of 5 years (an average of 80 per year maximum combined use of AN/SSQ–110A or AN/SSQ–125);

(ix) Range Pingers—up to 400 hours over the course of 5 years (an average of 80 hours per year);

(x) SUS MK–84—up to 120 devices over the course of 5 years (an average of 24 per year);

(xi) PUTR Transponder—up to 400 hours over the course of 5 years (an average of 80 hours per year); and

(xii) MK–39 EMATT Targets—up to 60 devices over the course of 5 years (an average of 12 per year).

(2) The detonation of the underwater explosives indicated in paragraph (c)(2)(i) of this section, or similar explosives, conducted as part of the training exercises indicated in paragraph (c)(2)(ii) of this section:

(i) Underwater Explosives (Net Explosive Weight (NEW)):

(A) 5″ Naval Gunfire (9.5 lbs NEW);

(B) 76 mm rounds (1.6 lbs NEW);

(C) Maverick (78.5 lbs NEW);

(D) MK–82 (238 lbs NEW);

(E) MK–83 (238 lbs NEW);

(F) MK–83 (574 lbs NEW);

(G) MK–84 (945 lbs NEW);

(H) MK–48 (851 lbs NEW);

(I) AN/SSQ–110A (IEER explosive sonobuoy—5 lbs NEW);

(ii) Training Events:

(A) Gunnery Exercises (S–S GUNEX)—up to 60 exercises over the course of 5 years (an average of 12 per year);

(B) Bombing Exercises (BOMBEX)—up to 180 exercises over the course of 5 years (an average of 36 per year);

(C) Sinking Exercises (SINKEX)—up to 10 exercises over the course of 5 years (a maximum of 2 per year);

(D) Extended Echo Ranging and Improved Extended Echo Ranging (EER/IEER) Systems—up to 400 deployments over the course of 5 years (an average of 80 per year);

(E) Missile exercises (A–S MISSILEX)—up to 20 exercises over the course of 5 years (an average of 4 per year).

(d) The taking of marine mammals may be authorized in an LOA for the activities and sources listed in § 218.120(c) should the amounts (*i.e.,* hours, dips, number of exercises) vary from those estimated in § 218.120(c), provided that the variation does not result in exceeding the amount of take indicated in § 218.122(c).

§ 218.121 Effective dates.

Regulations in this subpart are effective from May 4, 2011, through May 4, 2016.

§ 218.122 Permissible methods of taking.

(a) Under Letters of Authorization issued pursuant to §§ 216.106 and 218.127 of this chapter, the Holder of the Letter of Authorization (hereinafter "Navy") may incidentally, but not intentionally, take marine mammals within the area described in § 218.120(b), provided the activity is in compliance with all terms, conditions, and requirements of these regulations and the appropriate Letter of Authorization.

(b) The activities identified in § 218.120(c) must be conducted in a manner that minimizes, to the greatest extent practicable, any adverse impacts on marine mammals and their habitat.

(c) The incidental take of marine mammals under the activities identified in § 218.120(c) is limited to the species listed below in paragraphs (c)(4) and (5) of this section by the indicated method of take and the indicated number of times (estimated based on the authorized amounts of sound source operation), but with the following allowances for annual variation in activities:

(1) In any given year, annual take, by harassment, of any species of marine mammal may not exceed the amount identified in paragraphs (c)(4) and (5) of this section, for that species by more than 25 percent (a post-calculation/estimation of which must be provided in the annual LOA application);

(2) In any given year, annual take by harassment of all marine mammal species combined may not exceed the estimated total of all species combined, indicated in paragraphs (c)(4) and (5) of this section, by more than 10 percent; and

(3) Over the course of the effective period of this subpart, total take, by harassment, of any species may not exceed the 5-year amounts indicated in paragraphs (c)(4) and (5) of this section by more than 10 percent. A running calculation/estimation of takes of each species over the course of the years covered by the rule must be maintained.

(4) Level B Harassment:

(i) Mysticetes:

(A) Humpback whale (*Megaptera novaeangliae*)—6,975 (an average of 1,395 annually);

(B) Fin whale (*Balaenoptera physalus*)—55185 (an average of 11,037 annually);

(C) Blue whale (*Balaenoptera musculus*)—10 (an average of 2 annually);

(D) Sei whale (*Balaenoptera borealis)*—40 (an average of 8 annually);

(E) Minke whale (*Balaenoptera acutorostrata*)—3,405 (an average of 681 annually);

(F) Gray whale (*Eschrichtius robustus*)—1,940 (an average of 388 annually); and

(G) North Pacific right whale (*Eubalaena japonica*)—10 (an average of 2 annually).

(ii) Odontocetes:

(A) Sperm whales (*Physeter macrocephalus*)—1,645 (an average of 329 annually);

(B) Killer whale (*Orcinus orca*)—53,245 (an average of 10,649 annually);

(C) Harbor porpoise (*Phocoena phocoena*)—27,200 (an average of 5,440 annually);

(D) Baird's beaked whales (*Berardius bairdii*)—2,435 (an average of 487 annually);

(E) Cuvier's beaked whales (*Ziphius cavirostris*)—11,560 (an average of 2,312 annually);

(F) Stejneger's beaked whales (*Mesoplodon stejnegeri*)—11,565 (an average of 2,313 annually);

(G) Pacific white-sided dolphin (*Lagenorhynchus obliquidens*)—84,955 (an average of 16,991 annually); and

(H) Dall's porpoise (*Phocoenoides dalli*)—1,031,870 (an average of 206,374 annually).

(iii) Pinnipeds:

(A) Steller sea lion (*Eumetopias jubatus*)—55,540 (an average of 11,108 annually)

(B) California sea lion (*Zalophus californianus*)—10 (an average of 2 annually);

(C) Harbor seal (*Phoca vitulina richardsi*)—10 (an average of 2 annually);

(D) Northern elephant seal (*Mirounga angustirostris*)—10,345 (an average of 2,069 annually); and

(E) Northern fur seal (*Callorhinus ursinus*)—771,010 (an average of 154,202 annually).

(5) Level A Harassment and/or mortality of no more than 15 beaked whales (total), of any of the species listed in § 218.122(c)(1)(ii)(D) through (F) over the course of the 5-year regulations.

§ 218.123 Prohibitions.

No person in connection with the activities described in § 218.120 may:

(a) Take any marine mammal not specified in § 218.122(c);

(b) Take any marine mammal specified in § 218.122(c) other than by incidental take as specified in §§ 218.122(c)(1), (c)(2), and (c)(3);

(c) Take a marine mammal specified in § 218.122(c) if such taking results in more than a negligible impact on the species or stocks of such marine mammal; or

(d) Violate, or fail to comply with, the terms, conditions, and requirements of these regulations or a Letter of Authorization issued under §§ 216.106 and 218.127 of this chapter.

§ 218.124 Mitigation.

(a) When conducting training and utilizing the sound sources or explosives identified in § 218.120(c), the mitigation measures contained in a Letter of Authorization issued under §§ 216.106 and 218.127 of this chapter must be implemented. These mitigation measures include, but are not limited to:

(1) Personnel Training (for all Training Types):

(i) All commanding officers (COs), executive officers (XOs), Lookouts, Officers of the Deck (OODs), junior OODs (JOODs), maritime patrol aircraft aircrews, and Anti-Submarine Warfare (ASW) helicopter crews shall complete the NMFS-approved Marine Species Awareness Training (MSAT) by viewing the U.S. Navy MSAT digital versatile disk (DVD). All bridge Lookouts shall complete both parts one and two of the MSAT; part two is optional for other personnel.

(ii) Navy Lookouts shall undertake extensive training in order to qualify as a watchstander in accordance with the Lookout Training Handbook (Naval Education and Training Command [NAVEDTRA] 12968–D).

(iii) Lookout training shall include on-the-job instruction under the supervision of a qualified, experienced Lookout. Following successful completion of this supervised training period, Lookouts shall complete the Personal Qualification Standard Program, certifying that they have demonstrated the necessary skills (such as detection and reporting of partially submerged objects). Personnel being trained as Lookouts can be counted among required Lookouts as long as supervisors monitor their progress and performance.

(iv) Lookouts shall be trained in the most effective means to ensure quick and effective communication within the command structure in order to facilitate implementation of protective measures if marine species are spotted.

(v) All Lookouts onboard platforms involved in ASW training events shall review the NMFS-approved Marine Species Awareness Training material prior to use of mid-frequency active sonar.

(vi) All COs, XOs, and officers standing watch on the bridge shall have reviewed the Marine Species Awareness Training material prior to a training event employing the use of MFAS/HFAS.

(2) General Operating Procedures (for all Training Types):

(i) Prior to major exercises, a Letter of Instruction, Mitigation Measures Message or Environmental Annex to the Operational Order shall be issued to further disseminate the personnel training requirement and general marine species protective measures.

(ii) COs shall make use of marine species detection cues and information to limit interaction with marine mammals to the maximum extent possible consistent with safety of the ship.

(iii) While underway, surface vessels shall have at least two Lookouts with binoculars; surfaced submarines shall have at least one Lookout with binoculars. Lookouts already posted for safety of navigation and man-overboard precautions may be used to fill this requirement. As part of their regular duties, Lookouts shall watch for and report to the OOD the presence of marine mammals.

(iv) On surface vessels equipped with mid-frequency active sonar, pedestal mounted "Big Eye" (20x110) binoculars shall be properly installed and in good working order to assist in the detection of marine mammals in the vicinity of the vessel.

(v) Personnel on Lookout shall employ visual search procedures employing a scanning methodology in accordance with the Lookout Training Handbook (NAVEDTRA 12968–D).

(vi) After sunset and prior to sunrise, Lookouts shall employ Night Lookouts Techniques in accordance with the Lookout Training Handbook (NAVEDTRA 12968–D).

(vii) While in transit, naval vessels shall be alert at all times, use extreme caution, and proceed at a "safe speed," which means the speed at which the CO can maintain crew safety and effectiveness of current operational directives, so that the vessel can take action to avoid a collision with any marine mammal.

(viii) When marine mammals have been sighted in the area, Navy vessels shall increase vigilance and take all reasonable and practicable actions to avoid collisions and activities that might result in close interaction of naval assets and marine mammals. Such action may include changing speed and/or direction and are dictated by environmental and other conditions (*e.g.,* safety, weather).

(ix) Navy aircraft participating in exercises at sea shall conduct and maintain surveillance for marine mammals as long as it does not violate safety constraints or interfere with the accomplishment of primary operational duties.

(x) All marine mammal detections shall be immediately reported to assigned Aircraft Control Unit for further dissemination to ships in the vicinity of the marine species as appropriate when it is reasonable to conclude that the course of the ship will likely result in a closing of the distance to the detected marine mammal.

(xi) Naval vessels shall maneuver to keep at least 1,500 ft (500 yd or 457 m) away from any observed whale in the vessel's path and avoid approaching whales head-on. These requirements do not apply if a vessel's safety is threatened, such as when change of course will create an imminent and serious threat to a person, vessel, or aircraft, and to the extent vessels are restricted in their ability to maneuver. Restricted maneuverability includes, but is not limited to, situations when

vessels are engaged in dredging, submerged activities, launching and recovering aircraft or landing craft, minesweeping activities, replenishment while underway and towing activities that severely restrict a vessel's ability to deviate course. Vessels shall take reasonable steps to alert other vessels in the vicinity of the whale. Given rapid swimming speeds and maneuverability of many dolphin species, naval vessels would maintain normal course and speed on sighting dolphins unless some condition indicated a need for the vessel to maneuver.

(3) Operating Procedures (for Anti-submarine Warfare (ASW) Operations):

(i) On the bridge of surface ships, there shall always be at least three people on watch whose duties include observing the water surface around the vessel.

(ii) All surface ships participating in ASW training events shall have, in addition to the three personnel on watch noted in paragraph (i), at least two additional personnel on watch as Lookouts at all times during the exercise.

(iii) Personnel on Lookout and officers on watch on the bridge shall have at least one set of binoculars available for each person to aid in the detection of marine mammals.

(iv) Personnel on Lookout shall be responsible for reporting all objects or anomalies sighted in the water (regardless of the distance from the vessel) to the Officer of the Deck, since any object or disturbance (*e.g.,* trash, periscope, surface disturbance, discoloration) in the water may be indicative of a threat to the vessel and its crew or indicative of a marine mammal that may need to be avoided as warranted.

(v) All personnel engaged in passive acoustic sonar operation (including aircraft, surface ships, or submarines) shall monitor for marine mammal vocalizations and report the detection of any marine mammal to the appropriate watch station for dissemination and appropriate action.

(vi) During mid-frequency active sonar operations, personnel shall utilize all available sensor and optical systems (such as night vision goggles) to aid in the detection of marine mammals.

(vii) Aircraft with deployed sonobuoys shall use only the passive capability of sonobuoys when marine mammals are detected within 200 yd (183 m) of the sonobuoy.

(viii) Helicopters shall observe/survey the vicinity of an ASW exercise for 10 minutes before the first deployment of active (dipping) sonar in the water.

(ix) Helicopters shall not dip their sonar within 200 yd (183 m) of a marine mammal and shall cease pinging if a marine mammal closes within 200 yd (183 m) of the sound source after pinging has begun.

(x) Safety Zones—When marine mammals are detected by any means (aircraft, shipboard Lookout, or acoustically) within 1,000 yd (914 m) of the sonar dome (the bow), the ship or submarine shall limit active transmission levels to at least 6 decibels (dB) below normal operating levels for that source (*i.e.,* limit to at most 229 dB for AN/SQS–53 and 219 for AN/SQS–56, *etc.*).

(A) Ships and submarines shall continue to limit maximum transmission levels by this 6–dB factor until the animal has been seen to leave the 1,000-yd (914 m) exclusion zone, has not been detected for 30 minutes, or the vessel has transited more than 2,000 yds (1,829 m) beyond the location of the last detection.

(B) Should a marine mammal be detected within 500 yd (457 m) of the sonar dome, active sonar transmissions shall be limited to at least 10 dB below the equipment's normal operating level (*i.e.,* limit to at most 225 dB for AN/SQS–53 and 215 for AN/SQS–56, *etc.*). Ships and submarines shall continue to limit maximum ping levels by this 10–dB factor until the animal has been seen to leave the 500-yd (457 m) safety zone (at which point the 6–dB powerdown applies until the animal leaves the 1,000-yd (914 m) safety zone), has not been detected for 30 minutes, or the vessel has transited more than 2,000 yd (1,829 m) beyond the location of the last detection.

(C) Should the marine mammal be detected within 200 yd (183 m) of the sonar dome, active sonar transmissions shall cease. Sonar shall not resume until the animal has been seen to leave the 200-yd (183 m) safety zone (at which point the 10–dB or 6–dB powerdowns apply until the animal leaves the 500-yd (457 m) or 1,000-yd (914 m) safety zone, respectively), has not been detected for 30 minutes, or the vessel has transited more than 2,000 yd (1,829 m) beyond the location of the last detection.

(D) Special conditions applicable for dolphins and porpoises only: If, after conducting an initial maneuver to avoid close quarters with dolphins or porpoises, the OOD concludes that dolphins or porpoises are deliberately closing to ride the vessel's bow wave, no further mitigation actions are necessary while the dolphins or porpoises continue to exhibit bow wave riding behavior.

(xi) Prior to start up or restart of active sonar, operators shall check that the Safety Zone radius around the sound source is clear of marine mammals.

(xii) Active sonar levels (generally)—Navy shall operate active sonar at the lowest practicable level, not to exceed 235 dB, except as required to meet tactical training objectives.

(xiii) Submarine sonar operators shall review detection indicators of close-aboard marine mammals prior to the commencement of ASW training events involving MFAS.

Note to paragraph (a)(3): If the need for power-down should arise (as detailed in 218.114(a)(3)(x)) when the Navy is operating a hull-mounted or sub-mounted source above 235 db (infrequent), the Navy shall follow the requirements as though they were operating at 235 dB—the normal operating level (*i.e.,* the first power-down will be to 229 dB, regardless of at what level above 235 dB active sonar was being operated).

(4) Sinking Exercise:

(i) All weapons firing shall be conducted during the period 1 hour after official sunrise to 30 minutes before official sunset.

(ii) An exclusion zone with a radius of 1.0 nm (1.9 km) shall be established around each target. An additional buffer of 0.5 nm (0.9 km) will be added to account for errors, target drift, and animal movements. Additionally, a safety zone, which will extend beyond the buffer zone by an additional 0.5 nm (0.9 km), shall be surveyed. Together, the zones extend out 2 nm (3.7 km) from the target.

(iii) A series of surveillance over-flights shall be conducted within the exclusion and the safety zones, prior to and during the exercise, when feasible. Survey protocol shall be as follows:

(A) Overflights within the exclusion zone shall be conducted in a manner that optimizes the surface area of the water observed. This may be accomplished through the use of the Navy's Search and Rescue Tactical Aid, which provides the best search altitude, ground speed, and track spacing for the discovery of small, possibly dark objects in the water based on the environmental conditions of the day. These environmental conditions include the angle of sun inclination, amount of daylight, cloud cover, visibility, and sea state.

(B) All visual surveillance activities shall be conducted by Navy personnel trained in visual surveillance. At least one member of the mitigation team shall have completed the Navy's marine mammal training program for Lookouts.

(C) In addition to the overflights, the exclusion zone shall be monitored by passive acoustic means, when assets are

available. This passive acoustic monitoring shall be maintained throughout the exercise. Potential assets include sonobuoys, which can be utilized to detect any vocalizing marine mammals (particularly sperm whales) in the vicinity of the exercise. The sonobuoys shall be re-seeded as necessary throughout the exercise. Additionally, if submarines are present, passive sonar onboard submarines may be utilized to detect any vocalizing marine mammals in the area. The OCE shall be informed of any aural detection of marine mammals and shall include this information in the determination of when it is safe to commence the exercise.

(D) On each day of the exercise, aerial surveillance of the exclusion and safety zones shall commence 2 hours prior to the first firing.

(E) The results of all visual, aerial, and acoustic searches shall be reported immediately to the OCE. No weapons launches or firing may commence until the OCE declares the safety and exclusion zones free of marine mammals.

(F) If a marine mammal is observed within the exclusion zone, firing shall be delayed until the animal is re-sighted outside the exclusion zone, or 30 minutes have elapsed. After 30 minutes, if the animal has not been re-sighted it can be assumed to have left the exclusion zone. The OCE shall determine if the marine mammal is in danger of being adversely affected by commencement of the exercise.

(G) During breaks in the exercise of 30 minutes or more, the exclusion zone shall again be surveyed for any marine mammal. If marine mammals are sighted within the exclusion zone or buffer zone, the OCE shall be notified, and the procedure described above shall be followed.

(H) Upon sinking of the vessel, a final surveillance of the exclusion zone shall be monitored for 2 hours, or until sunset, to verify that no marine mammals were harmed.

(iv) Aerial surveillance shall be conducted using helicopters or other aircraft based on necessity and availability.

(v) Where practicable, the Navy shall conduct the exercise in sea states that are ideal for marine mammal sighting, Beaufort Sea State 3 or less. In the event of a Beaufort Sea State 4 or above, survey efforts shall be increased within the zones. This shall be accomplished through the use of an additional aircraft, if available, and conducting tight search patterns.

(vi) The exercise shall not be conducted unless the exclusion zone can be adequately monitored visually.

(vii) In the event that any marine mammals are observed to be harmed in the area, NMFS shall be notified as soon as feasible following the stranding communication protocol. A detailed description of the animal shall be taken, the location noted, and if possible, photos taken of the marine mammal. This information shall be provided to NMFS via the Navy's regional environmental coordinator for purposes of identification (see the draft Stranding Plan for detail).

(viii) An after action report detailing the exercise's time line, the time the surveys commenced and terminated, amount, and types of all ordnance expended, and the results of survey efforts for each event shall be submitted to NMFS.

(5) Surface-to-Surface Gunnery (up to 5-inch Explosive Rounds):

(i) For exercises using targets towed by a vessel, target-towing vessels shall maintain a trained Lookout for marine mammals when feasible. If a marine mammal is sighted in the vicinity, the tow vessel shall immediately notify the firing vessel, which shall suspend the exercise until the area is clear.

(ii) A 600-yd (585 m) radius buffer zone shall be established around the intended target.

(iii) From the intended firing position, trained Lookouts shall survey the buffer zone for marine mammals prior to commencement and during the exercise as long as practicable. Due to the distance between the firing position and the buffer zone, Lookouts are only expected to visually detect breaching whales, whale blows, and large pods of dolphins and porpoises.

(iv) The exercise shall be conducted only when the buffer zone is visible and marine mammals are not detected within it.

(6) Surface-to-Surface Gunnery (non-explosive rounds):

(i) A 200-yd (183 m) radius buffer zone shall be established around the intended target.

(ii) From the intended firing position, trained Lookouts shall survey the buffer zone for marine mammals prior to commencement and during the exercise as long as practicable.

(iii) If available, target-towing vessels shall maintain a Lookout (unmanned towing vessels will not have a Lookout available). If a marine mammal is sighted in the vicinity of the exercise, the tow vessel shall immediately notify the firing vessel in order to secure gunnery firing until the area is clear.

(iv) The exercise shall be conducted only when the buffer zone is visible and marine mammals are not detected within the target area and the buffer zone.

(7) Surface-to-Air Gunnery (Explosive and Non-explosive Rounds):

(i) Vessels shall orient the geometry of gunnery exercises in order to prevent debris from falling in the area of sighted marine mammals.

(ii) Vessels shall expedite the attempt to recover any parachute deploying aerial targets to reduce the potential for entanglement of marine mammals.

(iii) Target-towing aircraft shall maintain a Lookout if feasible. If a marine mammal is sighted in the vicinity of the exercise, the tow aircraft shall immediately notify the firing vessel in order to secure gunnery firing until the area is clear.

(8) Air-to-Surface Gunnery (Explosive and Non-explosive Rounds):

(i) A 200-yd (183 m) radius buffer zone shall be established around the intended target.

(ii) If surface vessels are involved, Lookout(s) shall visually survey the buffer zone for marine mammals prior to commencement and during the exercise.

(iii) Aerial surveillance of the buffer zone for marine mammals shall be conducted prior to commencement of the exercise. Aerial surveillance altitude of 500 ft to 1,500 ft (152–456 m) is optimum. Aircraft crew/pilot shall maintain visual watch during exercises. Release of ordnance through cloud cover is prohibited; aircraft must be able to actually see ordnance impact areas.

(iv) The exercise shall be conducted only if marine mammals are not visible within the buffer zone.

(9) Small Arms Training (Grenades, Explosive and Non-explosive Rounds)—Lookouts shall visually survey for marine mammals. Weapons shall not be fired in the direction of known or observed marine mammals.

(10) Air-to-Surface At-sea Bombing Exercises (explosive bombs and rockets):

(i) If surface vessels are involved, trained Lookouts shall survey for marine mammals. Ordnance shall not be targeted to impact within 1,000 yd (914 m) of known or observed marine mammals.

(ii) A 1,000-yd (914 m) radius buffer zone shall be established around the intended target.

(iii) Aircraft shall visually survey the target and buffer zone for marine mammals prior to and during the exercise. The survey of the impact area shall be made by flying at 1,500 ft (457 m) or lower, if safe to do so, and at the slowest safe speed. Release of ordinance

through cloud cover is prohibited: Aircraft must be able to see ordnance impact areas. Survey aircraft shall employ most effective search tactics and capabilities.

(iv) The exercise shall be conducted only if marine mammals are not visible within the buffer zone.

(11) Air-to-Surface At-Sea Bombing Exercises (Non-explosive Bombs and Rockets):

(i) If surface vessels are involved, trained Lookouts shall survey for marine mammals. Ordnance shall not be targeted to impact within 1,000 yd (914 m) of known or observed marine mammals.

(ii) A 1,000-yd (914 m) radius buffer zone shall be established around the intended target.

(iii) Aircraft shall visually survey the target and buffer zone for marine mammals prior to and during the exercise. The survey of the impact area shall be made by flying at 1,500 ft (457 m) or lower, if safe to do so, and at the slowest safe speed. Release of ordnance through cloud cover is prohibited: Aircraft must be able to actually see ordnance impact areas. Survey aircraft shall employ most effective search tactics and capabilities.

(iv) The exercise shall be conducted only if marine mammals and are not visible within the buffer zone.

(12) Air-to-Surface Missile Exercises (explosive and non-explosive):

(i) Aircraft shall visually survey the target area for marine mammals. Visual inspection of the target area shall be made by flying at 1,500 ft (457 m) or lower, if safe to do so, and at the slowest safe speed. Firing or range clearance aircraft must be able to actually see ordnance impact areas.

(ii) Explosive ordnance shall not be targeted to impact within 1,800 yd (1646 m) of sighted marine mammals.

(13) Aircraft Training Activities Involving Non-Explosive Devices:

(i) Non-explosive devices such as some sonobuoys and inert bombs involve aerial drops of devices that have the potential to hit marine mammals if they are in the immediate vicinity of a floating target. The exclusion zone (200 yd), therefore, shall be clear of marine mammals and around the target location.

(ii) [Reserved]

(14) Extended Echo Ranging/ Improved Extended Echo Ranging (EER/ IEER):

(i) Crews shall conduct visual reconnaissance of the drop area prior to laying their intended sonobuoy pattern. This search shall be conducted at an altitude below 500 yd (457 m) at a slow speed, if operationally feasible and weather conditions permit. In dual aircraft operations, crews are allowed to conduct coordinated area clearances.

(ii) Crews shall conduct a minimum of 30 minutes of visual and aural monitoring of the search area prior to commanding the first post detonation. This 30-minute observation period may include pattern deployment time.

(iii) For any part of the intended sonobuoy pattern where a post (source/ receiver sonobuoy pair) shall be deployed within 1,000 yd (914 m) of observed marine mammal activity, the Navy shall deploy the receiver ONLY and monitor while conducting a visual search. When marine mammals are no longer detected within 1,000 yd (914 m) of the intended post position, the Navy shall co-locate the explosive source sonobuoy (AN/SSQ–110A) (source) with the receiver.

(iv) When operationally feasible, Navy crews shall conduct continuous visual and aural monitoring of marine mammal activity. This is to include monitoring of own-aircraft sensors from first sensor placement to checking off station and out of RF range of these sensors.

(v) Aural Detection—If the presence of marine mammals is detected aurally, then that shall cue the Navy aircrew to increase the diligence of their visual surveillance. Subsequently, if no marine mammals are visually detected, then the crew may continue multi-static active search.

(vi) Visual Detection—If marine mammals are visually detected within 1,000 yd (914 m) of the explosive source sonobuoy (AN/SSQ–110A) intended for use, then that payload shall not be detonated. Aircrews may utilize this post once the marine mammals have not been re-sighted for 30 minutes, or are observed to have moved outside the 1,000-yd (914 m) safety buffer. Aircrews may shift their multi-static active search to another post, where marine mammals are outside the 1,000-yd (914 m) safety buffer.

(vii) Aircrews shall make every attempt to manually detonate the unexploded charges at each post in the pattern prior to departing the operations area by using the "Payload 1 Release" command followed by the "Payload 2 Release" command. Aircrews shall refrain from using the "Scuttle" command when two payloads remain at a given post. Aircrews shall ensure that a 1,000-yd (914 m) safety buffer, visually clear of marine mammals, is maintained around each post as is done during active search operations.

(viii) Aircrews shall only leave posts with unexploded charges in the event of a sonobuoy malfunction, an aircraft system malfunction, or when an aircraft must immediately depart the area due to issues such as fuel constraints, inclement weather, and in-flight emergencies. In these cases, the sonobuoy shall self-scuttle using the secondary or tertiary method.

(ix) The Navy shall ensure all payloads are accounted for. Explosive source sonobuoys (AN/SSQ–110A) that cannot be scuttled shall be reported as unexploded ordnance via voice communications while airborne, then upon landing via naval message.

(x) Marine mammal monitoring shall continue until out of own-aircraft sensor range.

(15) The Navy shall abide by the letter of the "Stranding Response Plan for Major Navy Training Exercises in the GoA TMAA" (available at: *http://www.nmfs.noaa.gov/pr/permits/incidental.htm*), which is incorporated herein by reference, to include the following measures:

(i) Shutdown Procedures—When an Uncommon Stranding Event (USE—defined in § 216.271) occurs during a Major Training Exercise (MTE) (as defined in the Stranding Plan, meaning including Multi-strike group exercises, Joint Expeditionary exercises, and Marine Air Ground Task Force exercises in the GoA TMAA), the Navy shall implement the procedures described below.

(A) The Navy shall implement a Shutdown (as defined in the Stranding Response Plan for GoA TMAA) when advised by a NMFS Office of Protected Resources Headquarters Senior Official designated in the GoA TMAA Stranding Communication Protocol that a USE (as defined in the Stranding Response Plan for the GoA TMAA) involving live animals has been identified and that at least one live animal is located in the water. NMFS and Navy shall communicate, as needed, regarding the identification of the USE and the potential need to implement shutdown procedures.

(B) Any shutdown in a given area shall remain in effect in that area until NMFS advises the Navy that the subject(s) of the USE at that area die or are euthanized, or that all live animals involved in the USE at that area have left the area (either of their own volition or herded).

(C) If the Navy finds an injured or dead marine mammal floating at sea during an MTE, the Navy shall notify NMFS immediately or as soon as operational security considerations allow. The Navy shall provide NMFS with the species or description of the animal(s), the condition of the animal(s) including carcass condition if the animal(s) is/are dead), location, time of

first discovery, observed behavior(s) (if alive), and photo or video of the animal(s) (if available). Based on the information provided, NMFS shall determine if, and advise the Navy whether a modified shutdown is appropriate on a case-by-case basis.

(D) In the event, following a USE, that: Qualified individuals are attempting to herd animals back out to the open ocean and animals are not willing to leave, or animals are seen repeatedly heading for the open ocean but turning back to shore, NMFS and the Navy shall coordinate (including an investigation of other potential anthropogenic stressors in the area) to determine if the proximity of MFAS/HFAS activities or explosive detonations, though farther than 14 nm from the distressed animal(s), is likely decreasing the likelihood that the animals return to the open water. If so, NMFS and the Navy shall further coordinate to determine what measures are necessary to further minimize that likelihood and implement those measures as appropriate.

(ii) Within 72 hrs of NMFS notifying the Navy of the presence of a USE, the Navy shall provide available information to NMFS (per the GoA TMAA Communication Protocol) regarding the location, number and types of acoustic/explosive sources, direction and speed of units using MFAS/HFAS, and marine mammal sightings information associated with training activities occurring within 80 nm (148 km) and 72 hrs prior to the USE event. Information not initially available regarding the 80 nm (148 km) and 72 hrs prior to the event shall be provided as soon as it becomes available. The Navy shall provide NMFS investigative teams with additional relevant unclassified information as requested, if available.

(iii) Memorandum of Agreement (MOA)—The Navy and NMFS shall develop a MOA, or other mechanism, that will establish a framework whereby the Navy can (and provide the Navy examples of how they can best) assist NMFS with stranding investigations in certain circumstances.

(b) [Reserved]

§ 218.125 Requirements for monitoring and reporting.

(a) General Notification of Injured or Dead Marine Mammals—Navy personnel shall ensure that NMFS is notified immediately ((see Communication Plan) or as soon as clearance procedures allow) if an injured, stranded, or dead marine mammal is found during or shortly after, and in the vicinity of, any Navy training exercise utilizing MFAS, HFAS, or underwater explosive detonations. The Navy shall provide NMFS with the species or description of the animal(s), the condition of the animal(s) (including carcass condition if the animal is dead), location, time of first discovery, observed behavior(s) (if alive), and photo or video of the animal(s) (if available). In the event that an injured, stranded, or dead marine mammal is found by the Navy that is not in the vicinity of, or during or shortly after, MFAS, HFAS, or underwater explosive detonations, the Navy shall report the same information as listed above as soon as operationally feasible and clearance procedures allow.

(b) General Notification of Ship Strike—In the event of a ship strike by any Navy vessel, at any time or place, the Navy shall do the following:

(1) Immediately report to NMFS the species identification (if known), location (lat/long) of the animal (or the strike if the animal has disappeared), and whether the animal is alive or dead, or whether its status is unknown.

(2) Report to NMFS as soon as operationally feasible the size and length of animal, an estimate of the injury status (*e.g.*, dead, injured but alive, injured and moving, unknown, *etc*)., vessel class/type and operational status.

(3) Report to NMFS the vessel length, speed, and heading as soon as feasible.

(4) Provide NMFS a photo or video of the animal(s), if equipment is available.

(c) The Navy must conduct all monitoring and/or research required under the Letter of Authorization including abiding by the GoA TMAA Monitoring Plan. (*http://www.nmfs.noaa.gov/pr/permits/incidental.htm#applications*)

(d) Report on Monitoring required in paragraph (c) of this section—The Navy shall submit a report annually on December 15 describing the implementation and results (through October of the same year) of the monitoring required in paragraph (c) of this section. The Navy shall standardize data collection methods across ranges to allow for comparison in different geographic locations.

(e) *Sonar Exercise Notification*—The Navy shall submit to the NMFS Office of Protected Resources (specific contact information to be provided in LOA) either an electronic (preferably) or verbal report within 15 calendar days after the completion of any MTER indicating:

(1) Location of the exercise;

(2) Beginning and end dates of the exercise; and

(3) Type of exercise.

(f) Annual GoA TMAA Report—The Navy shall submit an Annual Exercise GoA TMAA Report on December 15 of every year (covering data gathered through October). This report shall contain the subsections and information indicated below.

(1) MFAS/HFAS Training Exercises—This section shall contain the following information for the following Coordinated and Strike Group exercises: Joint Multi-strike Group Exercises; Joint Expeditionary Exercises; and Marine Air Ground Task Force GoA TMAA:

(i) Exercise Information (for each exercise):

(A) Exercise designator;

(B) Date that exercise began and ended;

(C) Location;

(D) Number and types of active sources used in the exercise;

(E) Number and types of passive acoustic sources used in exercise;

(F) Number and types of vessels, aircraft, *etc.,* participating in exercise;

(G) Total hours of observation by watchstanders;

(H) Total hours of all active sonar source operation;

(I) Total hours of each active sonar source (along with explanation of how hours are calculated for sources typically quantified in alternate way (buoys, torpedoes, *etc.*)); and

(J) Wave height (high, low, and average during exercise).

(ii) Individual marine mammal sighting info (for each sighting in each exercise):

(A) Location of sighting;

(B) Species (if not possible—indication of whale/dolphin/pinniped);

(C) Number of individuals;

(D) Calves observed (y/n);

(E) Initial Detection Sensor;

(F) Indication of specific type of platform observation made from (including, for example, what type of surface vessel; *i.e.,* FFG, DDG, or CG);

(G) Length of time observers maintained visual contact with marine mammal(s);

(H) Wave height (ft);

(I) Visibility;

(J) Sonar source in use (y/n);

(K) Indication of whether animal is < 200 yd, 200–500 yd, 500–1,000 yd, 1,000–2,000 yd, or > 2,000 yd from sonar source in (x) above;

(L) Mitigation Implementation—Whether operation of sonar sensor was delayed, or sonar was powered or shut down, and how long the delay was;

(M) If source in use (x) is hull-mounted, true bearing of animal from ship, true direction of ship's travel, and estimation of animal's motion relative to ship (opening, closing, parallel); and

(N) Observed behavior—Watchstanders shall report, in plain language and without trying to categorize in any way, the observed behavior of the animals (such as animal closing to bow ride, paralleling course/speed, floating on surface and not swimming, *etc.*).

(iii) An evaluation (based on data gathered during all of the exercises) of the effectiveness of mitigation measures designed to avoid exposing marine mammals to MFAS. This evaluation shall identify the specific observations that support any conclusions the Navy reaches about the effectiveness of the mitigation.

(2) ASW Summary—This section shall include the following information as summarized from non-major training exercises (unit-level exercises, such as TRACKEXs):

(i) Total Hours—Total annual hours of each type of sonar source (along with explanation of how hours are calculated for sources typically quantified in alternate way (buoys, torpedoes, *etc.*)).

(ii) Cumulative Impacts—To the extent practicable, the Navy, in coordination with NMFS, shall develop and implement a method of annually reporting other training (*i.e.,* Unit Level Training (ULT)) utilizing hull-mounted sonar. The report shall present an annual (and seasonal, where practicable) depiction of non-major training exercises geographically across the GoA TMAA. The Navy shall include (in the GoA TMAA annual report) a brief annual progress update on the status of the development of an effective and unclassified method to report this information until an agreed-upon (with NMFS) method has been developed and implemented.

(3) Sinking Exercises (SINKEXs)—This section shall include the following information for each SINKEX completed that year:

(i) Exercise info:

(A) Location;

(B) Date and time exercise began and ended;

(C) Total hours of observation by watchstanders before, during, and after exercise;

(D) Total number and types of rounds expended/explosives detonated;

(E) Number and types of passive acoustic sources used in exercise;

(F) Total hours of passive acoustic search time;

(G) Number and types of vessels, aircraft, *etc.,* participating in exercise;

(H) Wave height in feet (high, low, and average during exercise); and

(I) Narrative description of sensors and platforms utilized for marine mammal detection and timeline illustrating how marine mammal detection was conducted.

(ii) Individual marine mammal observation during SINKEX (by Navy Lookouts) information:

(A) Location of sighting;

(B) Species (if not possible—indication of whale/dolphin/pinniped);

(C) Number of individuals;

(D) Calves observed (y/n);

(E) Initial detection sensor;

(F) Length of time observers maintained visual contact with marine mammal;

(G) Wave height (ft);

(H) Visibility;

(I) Whether sighting was before, during, or after detonations/exercise, and how many minutes before or after;

(J) Distance of marine mammal from actual detonations (or target spot if not yet detonated)—use four categories to define distance:

(*1*) The modeled injury threshold radius for the largest explosive used in that exercise type in that OPAREA (762 m for SINKEX in the GoA TMAA);

(*2*) The required exclusion zone (1 nm for SINKEX in the GoA TMAA);

(*3*) The required observation distance (if different than the exclusion zone (2 nm for SINKEX in the GoA TMAA); and

(*4*) Greater than the required observed distance. For example, in this case, the observer shall indicate if < 762 m, from 762 m–1 nm, from 1 nm–2 nm, and > 2 nm.

(K) Observed behavior—Watchstanders shall report, in plain language and without trying to categorize in any way, the observed behavior of the animals (such as animal closing to bow ride, paralleling course/speed, floating on surface and not swimming *etc.*), including speed and direction.

(L) Resulting mitigation implementation—Indicate whether explosive detonations were delayed, ceased, modified, or not modified due to marine mammal presence and for how long.

(M) If observation occurs while explosives are detonating in the water, indicate munitions type in use at time of marine mammal detection.

(4) Improved Extended Echo-Ranging System (IEER) Summary:

(i) Total number of IEER events conducted in the GoA TMAA;

(ii) Total expended/detonated rounds (buoys); and

(iii) Total number of self-scuttled IEER rounds.

(5) Explosives Summary—The Navy is in the process of improving the methods used to track explosive use to provide increased granularity. To the extent practicable, the Navy shall provide the information described below for all of their explosive exercises. Until the Navy is able to report in full the information below, they shall provide an annual update on the Navy's explosive tracking methods, including improvements from the previous year.

(i) Total annual number of each type of explosive exercise (of those identified as part of the "specified activity" in this final rule) conducted in the GoA TMAA; and

(ii) Total annual expended/detonated rounds (missiles, bombs, *etc.*) for each explosive type.

(g) GoA TMAA 5–Yr Comprehensive Report—The Navy shall submit to NMFS a draft report that analyzes and summarizes all of the multi-year marine mammal information gathered during ASW and explosive exercises for which annual reports are required (Annual GoA TMAA Exercise Reports and GoA TMAA Monitoring Plan Reports). This report shall be submitted at the end of the fourth year of the rule (December 2014), covering activities that have occurred through October 2014.

(h) Comprehensive National ASW Report—By June, 2014, the Navy shall submit a draft National Report that analyzes, compares, and summarizes the active sonar data gathered (through January 1, 2014) from the watchstanders and pursuant to the implementation of the Monitoring Plans for the Northwest Training Range Complex, the Southern California Range Complex, the Atlantic Fleet Active Sonar Training, the Hawaii Range Complex, the Mariana Islands Range Complex, and the Gulf of Alaska.

(i) The Navy shall comply with the Integrated Comprehensive Monitoring Program (ICMP) Plan and continue to improve the program in consultation with NMFS.

§ 218.126 Applications for Letters of Authorization.

To incidentally take marine mammals pursuant to these regulations, the U.S. Citizen (as defined by § 216.103 of this chapter) conducting the activity identified in § 218.120(c) (*i.e.,* the Navy) must apply for and obtain either an initial Letter of Authorization in accordance with § 218.127 or a renewal under § 218.128.

§ 218.127 Letters of Authorization.

(a) A Letter of Authorization, unless suspended or revoked, will be valid for a period of time not to exceed the period of validity of this subpart, but must be renewed annually or biennially subject to renewal conditions in § 218.128.

(b) Each Letter of Authorization shall set forth:

(1) Permissible methods of incidental taking;

(2) Means of effecting the least practicable adverse impact on the species, its habitat, and on the availability of the species for subsistence uses (*i.e.,* mitigation); and

(3) Requirements for mitigation, monitoring and reporting.

(c) Issuance and renewal of the Letter of Authorization shall be based on a determination that the total number of marine mammals taken by the activity as a whole will have no more than a negligible impact on the affected species or stock of marine mammal(s).

§ 218.128 Renewal of Letters of Authorization and adaptive management.

(a) A Letter of Authorization issued under §§ 216.106 and 218.127 of this chapter or the activity identified in § 218.120(c) shall be renewed annually or biennially upon:

(1) Notification to NMFS that the activity described in the application submitted under § 218.126 shall be undertaken and that there will not be a substantial modification to the described work, mitigation or monitoring undertaken during the upcoming 12–24 months;

(2) Receipt of the monitoring reports and notifications within the indicated timeframes required under § 218.125(b through j); and

(3) A determination by NMFS that the mitigation, monitoring, and reporting measures required under § 218.124 and the Letter of Authorization issued under §§ 216.126 and 218.127 of this chapter were undertaken and will be undertaken during the upcoming period of validity of a renewed Letter of Authorization.

(b) If a request for a renewal of a Letter of Authorization issued under §§ 216.126 and 216.128 indicates that a substantial modification, as determined by NMFS, to the described work, mitigation or monitoring undertaken during the upcoming season will occur, NMFS will provide the public a period of 30 days for review and comment on the request. Review and comment on renewals of Letters of Authorization are restricted to:

(1) New cited information and data indicating that the determinations made in this document are in need of reconsideration, and

(2) Proposed changes to the mitigation and monitoring requirements contained in these regulations or in the current Letter of Authorization.

(c) A notice of issuance or denial of a renewal of a Letter of Authorization will be published in the **Federal Register**.

(d) Adaptive Management—NMFS may modify or augment the existing mitigation or monitoring measures (after consulting with the Navy regarding the practicability of the modifications) if doing so creates a reasonable likelihood of more effectively accomplishing the goals of mitigation and monitoring set forth in the preamble of these regulations. Below are some of the possible sources of new data that could contribute to the decision to modify the mitigation or monitoring measures:

(1) Results from the Navy's monitoring from the previous year (either from the GoA TMAA or other locations).

(2) Findings of the Monitoring Workshop that the Navy will convene in 2011.

(3) Compiled results of Navy-funded research and development (R&D) studies (presented pursuant to the Integrated Comprehensive Monitoring Plan).

(4) Results from specific stranding investigations (either from the GoA TMAA or other locations, and involving coincident MFAS/HFAS or explosives training or not involving coincident use).

(5) Results from the Long Term Prospective Study described in the preamble to these regulations.

(6) Results from general marine mammal and sound research (funded by the Navy (described below) or otherwise).

§ 218.129 Modifications to Letters of Authorization.

(a) Except as provided in paragraph (b) of this section, no substantive modification (including withdrawal or suspension) to the Letter of Authorization by NMFS, issued pursuant to §§ 216.126 and 218.127 of this chapter and subject to the provisions of this subpart, shall be made until after notification and an opportunity for public comment has been provided. For purposes of this paragraph, a renewal of a Letter of Authorization under § 218.128, without modification (except for the period of validity), is not considered a substantive modification.

(b) If the Assistant Administrator determines that an emergency exists that poses a significant risk to the well-being of the species or stocks of marine mammals specified in § 218.120(b), a Letter of Authorization issued pursuant to §§ 216.126 and 218.127 of this chapter may be substantively modified without prior notification and an opportunity for public comment. Notification will be published in the **Federal Register** within 30 days subsequent to the action.

[FR Doc. 2011–10440 Filed 5–3–11; 8:45 am]

BILLING CODE 3510–22–P

Reader Aids

Federal Register

Vol. 76, No. 86

Wednesday, May 4, 2011

CUSTOMER SERVICE AND INFORMATION

Federal Register/Code of Federal Regulations	
General Information, indexes and other finding aids	**202–741–6000**
Laws	**741–6000**
Presidential Documents	
Executive orders and proclamations	**741–6000**
The United States Government Manual	**741–6000**
Other Services	
Electronic and on-line services (voice)	**741–6020**
Privacy Act Compilation	**741–6064**
Public Laws Update Service (numbers, dates, etc.)	**741–6043**
TTY for the deaf-and-hard-of-hearing	**741–6086**

ELECTRONIC RESEARCH

World Wide Web

Full text of the daily Federal Register, CFR and other publications is located at: **www.fdsys.gov.**

Federal Register information and research tools, including Public Inspection List, indexes, and links to GPO Access are located at: **www.ofr.gov.**

E-mail

FEDREGTOC-L (Federal Register Table of Contents LISTSERV) is an open e-mail service that provides subscribers with a digital form of the Federal Register Table of Contents. The digital form of the Federal Register Table of Contents includes HTML and PDF links to the full text of each document.

To join or leave, go to **http://listserv.access.gpo.gov** and select *Online mailing list archives, FEDREGTOC-L, Join or leave the list (or change settings);* then follow the instructions.

PENS (Public Law Electronic Notification Service) is an e-mail service that notifies subscribers of recently enacted laws.

To subscribe, go to **http://listserv.gsa.gov/archives/publaws-l.html** and select *Join or leave the list (or change settings);* then follow the instructions.

FEDREGTOC-L and **PENS** are mailing lists only. We cannot respond to specific inquiries.

Reference questions. Send questions and comments about the Federal Register system to: **fedreg.info@nara.gov**

The Federal Register staff cannot interpret specific documents or regulations.

Reminders. Effective January 1, 2009, the Reminders, including Rules Going Into Effect and Comments Due Next Week, no longer appear in the Reader Aids section of the Federal Register. This information can be found online at **http://www.regulations.gov.**

CFR Checklist. Effective January 1, 2009, the CFR Checklist no longer appears in the Federal Register. This information can be found online at **http://bookstore.gpo.gov/.**

FEDERAL REGISTER PAGES AND DATE, MAY

24339–24786 2
24787–25210 3
25211–25514 4

CFR PARTS AFFECTED DURING MAY

At the end of each month the Office of the Federal Register publishes separately a List of CFR Sections Affected (LSA), which lists parts and sections affected by documents published since the revision date of each title.

3 CFR

Proclamations:
8658 24785
Executive Orders:
13571 24339
13572 24787
Administrative Orders:
01 24791

5 CFR

Proposed Rules:
550 24406
2640 24816

7 CFR

4288 24343
Proposed Rules:
271 ..... 24820, 25414
272 ..... 24820, 25414
273 25414
275 24820

9 CFR

93 24793
94 24793
95 24793
321 24714
332 24714
381 24714

10 CFR

429 24762
430 ..... 24762, 25211
Proposed Rules:
26 24831
61 24831

14 CFR

25 25229
39 ..... 24343, 24345, 24349, 24351, 24354, 24356, 24358, 24360, 24793, 24796, 24798
97 ..... 25231, 25232
Proposed Rules:
39 ..... 24407, 24832, 25259, 25264
71 24409
460 24836

17 CFR

Proposed Rules:
Ch. I 25274
229 25273
240 25273

19 CFR

210 24363

20 CFR

404 24802
405 24802
416 24802
422 24802

21 CFR

73 25234

24 CFR

200 24363
207 24363

26 CFR

301 24813

29 CFR

1910 24576
1915 24576

30 CFR

Proposed Rules:
70 25277
71 25277
72 25277
75 25277
90 25277
104 25277

31 CFR

Proposed Rules:
1069 24410

33 CFR

117 24372
165 24813
Proposed Rules:
165 ..... 24837, 24840, 24843, 25278

40 CFR

52 ..... 24372, 25178
180 ..... 25236, 25240
1042 25246
Proposed Rules:
52 ..... 24421, 24846
60 24976
63 24976
180 25281

42 CFR

Proposed Rules:
482 25460
485 25460
491 25460
494 25460

47 CFR

0 ..... 24376, 24383
1 ..... 24376, 24383
64 24393
Proposed Rules:
0 24434
1 24434
64 ..... 24437, 24442

73 24846

48 CFR

Proposed Rules:
4 24443
8 24443
17 24443
37 24443
52 24443

49 CFR

451 24402

50 CFR

218 25480
660 25246
679 ..... 24403, 24404

Proposed Rules:
17 25150
648 24444
679 25295

LIST OF PUBLIC LAWS

This is a continuing list of public bills from the current session of Congress which have become Federal laws. It may be used in conjunction with "P L U S" (Public Laws Update Service) on 202–741–6043. This list is also available online at *http://www.archives.gov/federal-register/laws*.

The text of laws is not published in the **Federal Register** but may be ordered in "slip law" (individual pamphlet) form from the Superintendent of Documents, U.S. Government Printing Office, Washington, DC 20402 (phone, 202–512–1808). The text will also be made available on the Internet from GPO's Federal Digital System (FDsys) at *http://www.gpo.gov/fdsys*. Some laws may not yet be available.

S. 307/P.L. 112–11
To designate the Federal building and United States courthouse located at 217 West King Street, Martinsburg, West Virginia, as the "W. Craig Broadwater Federal Building and United States Courthouse". (Apr. 25, 2011; 125 Stat. 213)

S.J. Res. 8/P.L. 112–12
Providing for the appointment of Stephen M. Case as a citizen regent of the Board of Regents of the Smithsonian Institution. (Apr. 25, 2011; 125 Stat. 214)

Last List April 19, 2011

Public Laws Electronic Notification Service (PENS)

PENS is a free electronic mail notification service of newly enacted public laws. To subscribe, go to *http://listserv.gsa.gov/archives/publaws-l.html*

Note: This service is strictly for E-mail notification of new laws. The text of laws is not available through this service. **PENS** cannot respond to specific inquiries sent to this address.