AUTHENTICATED
U.S. GOVERNMENT
INFORMATION
GPO

FEDERAL REGISTER

Vol. 76 Monday,
No. 147 August 1, 2011

Pages 45653–46184

OFFICE OF THE FEDERAL REGISTER

The **FEDERAL REGISTER** (ISSN 0097–6326) is published daily, Monday through Friday, except official holidays, by the Office of the Federal Register, National Archives and Records Administration, Washington, DC 20408, under the Federal Register Act (44 U.S.C. Ch. 15) and the regulations of the Administrative Committee of the Federal Register (1 CFR Ch. I). The Superintendent of Documents, U.S. Government Printing Office, Washington, DC 20402 is the exclusive distributor of the official edition. Periodicals postage is paid at Washington, DC.

The **FEDERAL REGISTER** provides a uniform system for making available to the public regulations and legal notices issued by Federal agencies. These include Presidential proclamations and Executive Orders, Federal agency documents having general applicability and legal effect, documents required to be published by act of Congress, and other Federal agency documents of public interest.

Documents are on file for public inspection in the Office of the Federal Register the day before they are published, unless the issuing agency requests earlier filing. For a list of documents currently on file for public inspection, see *www.ofr.gov.*

The seal of the National Archives and Records Administration authenticates the Federal Register as the official serial publication established under the Federal Register Act. Under 44 U.S.C. 1507, the contents of the **Federal Register** shall be judicially noticed.

The **Federal Register** is published in paper and on 24x microfiche. It is also available online at no charge at *www.fdsys.gov*, a service of the U.S. Government Printing Office.

The online edition of the **Federal Register** is issued under the authority of the Administrative Committee of the Federal Register as the official legal equivalent of the paper and microfiche editions (44 U.S.C. 4101 and 1 CFR 5.10). It is updated by 6:00 a.m. each day the **Federal Register** is published and includes both text and graphics from Volume 59, 1 (January 2, 1994) forward. For more information, contact the GPO Customer Contact Center, U.S. Government Printing Office. Phone 202-512-1800 or 866-512-1800 (toll free). E-mail, *gpo@custhelp.com.*

The annual subscription price for the **Federal Register** paper edition is $749 plus postage, or $808, plus postage, for a combined **Federal Register, Federal Register** Index and List of CFR Sections Affected (LSA) subscription; the microfiche edition of the **Federal Register** including the **Federal Register** Index and LSA is $165, plus postage. Six month subscriptions are available for one-half the annual rate. The prevailing postal rates will be applied to orders according to the delivery method requested. The price of a single copy of the daily **Federal Register,** including postage, is based on the number of pages: $11 for an issue containing less than 200 pages; $22 for an issue containing 200 to 400 pages; and $33 for an issue containing more than 400 pages. Single issues of the microfiche edition may be purchased for $3 per copy, including postage. Remit check or money order, made payable to the Superintendent of Documents, or charge to your GPO Deposit Account, VISA, MasterCard, American Express, or Discover. Mail to: U.S. Government Printing Office—New Orders, P.O. Box 979050, St. Louis, MO 63197-9000; or call toll free 1-866-512-1800, DC area 202-512-1800; or go to the U.S. Government Online Bookstore site, see *bookstore.gpo.gov.*

There are no restrictions on the republication of material appearing in the **Federal Register.**

How To Cite This Publication: Use the volume number and the page number. Example: 76 FR 12345.

Postmaster: Send address changes to the Superintendent of Documents, Federal Register, U.S. Government Printing Office, Washington, DC 20402, along with the entire mailing label from the last issue received.

SUBSCRIPTIONS AND COPIES

PUBLIC

Subscriptions:

Paper or fiche	**202–512–1800**
Assistance with public subscriptions	**202–512–1806**

General online information **202–512–1530; 1–888–293–6498**

Single copies/back copies:

Paper or fiche	**202–512–1800**
Assistance with public single copies	**1–866–512–1800 (Toll-Free)**

FEDERAL AGENCIES

Subscriptions:

Paper or fiche	**202–741–6005**
Assistance with Federal agency subscriptions	**202–741–6005**

Printed on recycled paper.

Contents

Federal Register

Vol. 76, No. 147

Monday, August 1, 2011

Agriculture Department
See Animal and Plant Health Inspection Service
See Forest Service

Alcohol, Tobacco, Firearms, and Explosives Bureau
NOTICES
Agency Information Collection Activities; Proposals, Submissions, and Approvals:
Firearms Transaction Record, Part 1, Over-the-Counter, 45863

Animal and Plant Health Inspection Service
NOTICES
Agency Information Collection Activities:
Pork and Poultry Products From Mexico Transiting the United States, 45769–45770

Army Department
NOTICES
Privacy Act; Systems of Records, 45783–45785

Arts and Humanities, National Foundation
See National Foundation on the Arts and the Humanities

Blind or Severely Disabled, Committee for Purchase From People Who Are
See Committee for Purchase From People Who Are Blind or Severely Disabled

Bureau of Consumer Financial Protection
NOTICES
Privacy Act; Systems of Records, 45757–45769

Coast Guard
RULES
Drawbridge Operation Regulations:
Raritan River, Arthur Kill and their Tributaries, Staten Island, NY and Elizabeth, NJ, 45690–45693
Safety Zones:
San Diego POPS Fireworks, San Diego, CA, 45693–45695
PROPOSED RULES
International Convention on Standards of Training, Certification and Watchkeeping for Seafarers:
Implementation of Amendments and Changes to Domestic Endorsements; Public Meetings, 45908–46081
Regulated Navigation Areas:
Pacific Sound Resources and Lockheed Shipyard EPA Superfund Cleanup Sites, Elliott Bay, Seattle, WA, 45738–45741

Commerce Department
See Foreign-Trade Zones Board
See International Trade Administration
See National Oceanic and Atmospheric Administration

Committee for Purchase From People Who Are Blind or Severely Disabled
NOTICES
Agency Information Collection Activities; Proposals, Submissions, and Approvals:
Nonprofit Agency Recordkeeping Requirements, 45782–45783

Commodity Futures Trading Commission
RULES
Provisions Common to Registered Entities; Correction, 45666
PROPOSED RULES
Clearing Member Risk Management, 45724–45730
Customer Clearing Documentation and Timing of Acceptance for Clearing, 45730–45738

Copyright Royalty Board
RULES
Use of Sound Recordings Under Statutory License, 45695–45696

Defense Department
See Army Department
NOTICES
Meetings:
Missile Defense Advisory Committee, 45783

Department of Transportation
See Pipeline and Hazardous Materials Safety Administration

Drug Enforcement Administration
NOTICES
Denial of Applications:
Shannon L. Gallentine, D.P.M., 45864–45867
Suspension of Registrations:
Michael S. Moore, M.D., 45867–45878

Employment and Training Administration
RULES
Wage Methodology for the Temporary Non-agricultural Employment H–2B Program:
Amendment of Effective Date, 45667–45673
NOTICES
Amended Certifications Regarding Eligibility to Apply for Worker Adjustment Assistance:
Alticor, Inc., et al., 45878
Cinram Manufacturing, LLC, et al., Olyphant, PA, 45879
West, A Thomson Reuters Legal, Eagan, MN, 45879
Determinations Regarding Eligibility to Apply for Worker Adjustment Assistance and Alternative Trade Adjustment Assistance, 45879–45881
Investigations Regarding Certifications of Eligibility to Apply for Worker Adjustment Assistance and Alternative Trade Assistance, 45881

Energy Department
See Energy Efficiency and Renewable Energy Office
See Federal Energy Regulatory Commission
NOTICES
Meetings:
Advanced Scientific Computing Advisory Committee, 45786

Energy Efficiency and Renewable Energy Office
NOTICES
Agency Information Collection Activities; Proposals, Submissions, and Approvals, 45786

Environmental Protection Agency
RULES
Approvals and Promulgations of Air Quality Implementation Plans:
Pennsylvania; Diesel-Powered Motor Vehicle Idling Act, 45705–45709
PROPOSED RULES
Approvals and Promulgations of Air Quality Implementation Plans:
Pennsylvania; Diesel-Powered Motor Vehicle Idling Act, 45741–45742
Secondary National Ambient Air Quality Standards for Oxides of Nitrogen and Sulfur, 46084–46147
NOTICES
Proposed Reissuance of a General NPDES Permit for Facilities Related to Oil and Gas Extraction, 45792
Proposed Settlement Agreements, Clean Air Act Citizen Suits, 45793–45794
Public Water System Supervision Program Revision for the State of Louisiana, 45794
Sixty-Eighth Report of the TSCA Interagency Testing Committee, 46174–46180

Executive Office of the President
See Presidential Documents

Federal Aviation Administration
RULES
Airworthiness Directives:
Cessna Aircraft Co. (Cessna) Models 337, 337A (USAF 02B), 337B, 337C, 337D, 337E, etc., Airplanes, 45657–45666
Superior Air Parts and Lycoming Engines (Formerly Textron Lycoming) Fuel-Injected Engines, 45655–45657
PROPOSED RULES
Airworthiness Directives:
Bombardier Inc. Model DHC–8–400 Series Airplanes, 45713–45715

Federal Communications Commission
NOTICES
Agency Information Collection Activities; Proposals, Submissions, and Approvals, 45794–45797

Federal Election Commission
NOTICES
Filing Dates for the New York Special Election in the 9th Congressional District, 45797–45798
Meetings; Sunshine Act, 45798
Policy Statements:
Program for Requesting Consideration of Legal Questions by the Commission, 45798–45799

Federal Energy Regulatory Commission
NOTICES
Combined Filings, 45787–45792

Federal Mine Safety and Health Review Commission
NOTICES
Meetings; Sunshine Act, 45799

Federal Trade Commission
PROPOSED RULES
Appliance Labeling, 45715–45724
NOTICES
Agency Information Collection Activities; Proposals, Submissions, and Approvals, 45799–45801
Analysis of Agreement Containing Consent Orders to Aid Public Comments:
Perrigo Co. and Paddock Laboratories, Inc., 45801–45804

Financial Crimes Enforcement Network
RULES
Financial Crimes Enforcement Network:
Repeal of Final Rule and Withdrawal of Finding of Primary Money Laundering Concern Against VEF Banka, 45689–45690

Fish and Wildlife Service
RULES
Financial Assistance:
Wildlife Restoration, Sport Fish Restoration, Hunter Education and Safety, 46150–46171

Food and Drug Administration
NOTICES
Animal Drug User Fee Rates and Payment Procedures for Fiscal Year 2012, 45811–45814
Animal Generic Drug User Fee Rates and Payment Procedures for Fiscal Year 2012, 45814–45818
Burden of Food and Drug Administration Food Safety Modernization Act Fee Amounts on Small Business, 45818–45820
Food Safety Modernization Act:
Domestic and Foreign Facility Reinspections, Recall, and Importer Reinspection User Fee Rates for Fiscal Year 2012, 45820–45825
Institute of Medicine Report; Availability:
Medical Devices and the Public's Health, The FDA 510(k) Clearance Process at 35 Years, 45825–45826
Medical Device User Fee Rates for Fiscal Year 2012, 45826–45831
Prescription Drug User Fee Rates for Fiscal Year 2012, 45831–45838

Foreign-Trade Zones Board
NOTICES
Applications for Manufacturing Authority:
Makita Corp. of America, Foreign-Trade Zone 26, Atlanta, GA, 45771–45772
Proposed Foreign-Trade Zones:
Brunswick, ME, 45772

Forest Service
NOTICES
Meetings:
Glenn/Colusa County Resource Advisory Committee, 45771
Plumas County Resource Advisory Committee, 45771
Tehama County Resource Advisory Committee, 45770–45771

Health and Human Services Department
See Food and Drug Administration
See National Institutes of Health
NOTICES
Agency Information Collection Activities; Proposals, Submissions, and Approvals, 45804–45805
Calculation of Annual Federal Medical Assistance Percentages for Indian Tribes for Use in the Title IV–E Foster Care, Adoption Assistance, and Kinship Guardianship Assistance Programs, 45805–45810
Meetings:
National Committee on Vital and Health Statistics, 45810–45811

Homeland Security Department
See Coast Guard
See U.S. Citizenship and Immigration Services
See U.S. Customs and Border Protection

Interior Department
See Fish and Wildlife Service
See Land Management Bureau
See National Park Service
See Surface Mining Reclamation and Enforcement Office
NOTICES
Meetings:
Vendor Outreach Workshop for Small Businesses in New Mexico, 45847–45848

Internal Revenue Service
RULES
Methods of Accounting Used by Corporations that Acquire Assets of Other Corporations, 45673–45689
NOTICES
Agency Information Collection Activities; Proposals, Submissions, and Approvals, 45906

International Trade Administration
NOTICES
Antidumping or Countervailing Duty Order, Finding, or Suspended Investigation; Administrative Review, 45773–45775
Antidumping or Countervailing Duty Order, Finding, or Suspended Investigations; Sunset Reviews, 45775
Final Results of Antidumping Duty New Shipper Reviews:
Certain Frozen Warmwater Shrimp from the Socialist Republic of Vietnam, 45775–45777
Initiation of Antidumping Duty New Shipper Reviews:
Tapered Roller Bearings and Parts Thereof, Finished and Unfinished from the People's Republic of China, 45777–45778
Initiation of Five Year (Sunset) Review, 45778–45780

International Trade Commission
NOTICES
Complaints, 45850–45851
Institution of Five-Year Reviews Concerning Countervailing Duty Orders:
Certain Bearings from China, France, Germany, and Italy, 45853–45856
Certain Lined Paper School Supplies from China, India, and Indonesia, 45851–45853
Institution of Five-Year Review Concerning the Antidumping Duty Orders:
Silicomanganese from Brazil, China, and Ukraine, 45856–45859
Investigations:
Certain Electronic Devices, Including Wireless Communication Devices, Portable Music And Data Processing Devices, And Tablet Computers, 45860–45861
Certain Video Analytics Software, Systems, Components Thereof, and Products Containing Same, 45859–45860

Justice Department
See Alcohol, Tobacco, Firearms, and Explosives Bureau
See Drug Enforcement Administration
NOTICES
Agency Information Collection Activities; Proposals, Submissions, and Approvals:
Customer Outreach and Information, 45861–45862
Semi-Annual Progress Report for Grantees from the Children and Youth Exposed to Violence, 45861
Semi-Annual Progress Report for Grantees from the Services, Training, Education and Policies to Reduce Domestic Violence, etc., 45862–45863

Labor Department
See Employment and Training Administration

Land Management Bureau
NOTICES
Application for Withdrawal of National Forest System Lands, Oregon, 45848

Library of Congress
See Copyright Royalty Board

Mine Safety and Health Federal Review Commission
See Federal Mine Safety and Health Review Commission

National Foundation on the Arts and the Humanities
NOTICES
Agency Information Collection Activities; Proposals, Submissions, and Approvals, 45881–45882

National Institutes of Health
NOTICES
Government-Owned Inventions; Availability for Licensing, 45838–45841
Meetings:
Center for Scientific Review, 45842–45843
National Heart, Lung, and Blood Institute, 45843
National Library of Medicine, 45842–45843

National Labor Relations Board
NOTICES
Meetings; Sunshine Act, 45882

National Oceanic and Atmospheric Administration
RULES
Fisheries of the Exclusive Economic Zone Off Alaska:
Pacific Ocean Perch in the West Yakutat District of the Gulf of Alaska; Closure, 45709
PROPOSED RULES
Fisheries of Northeastern United States:
Atlantic Mackerel, Squid, and Butterfish Fisheries; Amendment 11, 45742–45756
NOTICES
Environmental Assessments; Availability, etc.:
Emergency Restoration of Seagrass Impacts from the Deepwater Horizon Oil Spill Response, 45780
Meetings:
Atlantic Highly Migratory Species Advisory Panel, 45781
South Atlantic Fishery Management Council, 45780–45781
Permits:
Endangered Species; File No. 15552, 45781–45782

National Park Service
NOTICES
Environmental Impact Statements; Availability, etc.:
Denali Park Road Vehicle Management Plan, Denali National Park and Preserve, 45848–45849

Personnel Management Office
PROPOSED RULES
Pay in Nonforeign Areas, 45710–45713

Pipeline and Hazardous Materials Safety Administration
NOTICES
Agency Information Collection Activities; Proposals, Submissions, and Approvals, 45904–45906

Postal Regulatory Commission
NOTICES
Post Office Closings, 45882–45883

Presidential Documents
PROCLAMATIONS
Special Observances:
World Hepatitis Day (Proc. 8696), 46181–46184
ADMINISTRATIVE ORDERS
Lebanon; Continuation of National Emergency with Respect to Actions to Undermine its Sovereignty or Democratic Processes and Institutions, 45653

Securities and Exchange Commission
NOTICES
Self-Regulatory Organizations; Proposed Rule Changes:
EDGA Exchange, Inc., 45896–45899
EDGX Exchange, Inc., 45895–45896
Financial Industry Regulatory Authority, Inc., 45883–45885
NYSE Amex LLC, 45899–45902
NYSE Arca, Inc., 45885–45895

Social Security Administration
NOTICES
Agency Information Collection Activities; Proposals, Submissions, and Approvals, 45902–45904

Surface Mining Reclamation and Enforcement Office
NOTICES
Agency Information Collection Activities; Proposals, Submissions, and Approvals, 45849–45850

Transportation Department
See Federal Aviation Administration
See Pipeline and Hazardous Materials Safety Administration

Treasury Department
See Financial Crimes Enforcement Network
See Internal Revenue Service
NOTICES
Agency Information Collection Activities; Proposals, Submissions, and Approvals, 45906

U.S. Citizenship and Immigration Services
NOTICES
Agency Information Collection Activities:
E-Verify Program, 45843–45844
Agency Information Collection Activities; Proposals, Submissions, and Approvals, 45844–45845

U.S. Customs and Border Protection
NOTICES
Final Determinations on Country of Origin:
Certain Patient Transport Chair, 45845–45847

Veterans Affairs Department
RULES
Vocational Rehabilitation and Employment Program:
Changes to Subsistence Allowance, 45697–45705

Separate Parts In This Issue

Part II
Homeland Security Department, Coast Guard, 45908–46081

Part III
Environmental Protection Agency, 46084–46147

Part IV
Interior Department, Fish and Wildlife Service, 46150–46171

Part V
Environmental Protection Agency, 46174–46180

Part VI
Presidential Documents, 46181–46184

Reader Aids

Consult the Reader Aids section at the end of this page for phone numbers, online resources, finding aids, reminders, and notice of recently enacted public laws.

To subscribe to the Federal Register Table of Contents LISTSERV electronic mailing list, go to http://listserv.access.gpo.gov and select Online mailing list archives, FEDREGTOC-L, Join or leave the list (or change settings); then follow the instructions.

CFR PARTS AFFECTED IN THIS ISSUE

A cumulative list of the parts affected this month can be found in the Reader Aids section at the end of this issue.

3 CFR

Proclamations:
8696 46183

Administrative Orders:
Notices:
Notice of July 28, 2011 45653

5 CFR

Proposed Rules:
530 45710
531 45710
536 45710

14 CFR
39 (2 documents) 45655, 45657

Proposed Rules:
39 45713

16 CFR

Proposed Rules:
305 45715

17 CFR
40 45666

Proposed Rules:
1 (2 documents) 45724, 45730
23 (2 documents) 45724, 45730
39 45730

20 CFR
655 45667

26 CFR
1 45673

31 CFR
1010 45689

33 CFR
117 45690
165 45693

Proposed Rules:
165 45738

37 CFR
370 45695
382 45695

38 CFR
21 45697

40 CFR
52 45705

Proposed Rules:
50 46084
52 45741

46 CFR

Proposed Rules:
1 45908
10 45908
11 45908
12 45908
13 45908
14 45908
15 45908

50 CFR
80 46150
679 45709

Proposed Rules:
648 45742

Federal Register
Vol. 76, No. 147
Monday, August 1, 2011

Presidential Documents

Title 3—

The President

Notice of July 28, 2011

Continuation of the National Emergency With Respect to Actions of Certain Persons to Undermine the Sovereignty of Lebanon or Its Democratic Processes and Institutions

On August 1, 2007, by Executive Order 13441, the President declared a national emergency and ordered related measures blocking the property of certain persons undermining the sovereignty of Lebanon or its democratic processes or institutions and certain other persons, pursuant to the International Emergency Economic Powers Act (50 U.S.C. 1701–1706). The President determined that the actions of certain persons to undermine Lebanon's legitimate and democratically elected government or democratic institutions; to contribute to the deliberate breakdown in the rule of law in Lebanon, including through politically motivated violence and intimidation; to reassert Syrian control or contribute to Syrian interference in Lebanon; or to infringe upon or undermine Lebanese sovereignty and contribute to political and economic instability in that country and the region and constitute an unusual and extraordinary threat to the national security and foreign policy of the United States.

Certain ongoing activities, such as continuing arms transfers to Hizballah that include increasingly sophisticated weapons systems, serve to undermine Lebanese sovereignty, contribute to political and economic instability in Lebanon, and continue to pose an unusual and extraordinary threat to the national security and foreign policy of the United States. Therefore, the national emergency declared on August 1, 2007, and the measures adopted on that date to deal with that emergency, must continue in effect beyond August 1, 2011. In accordance with section 202(d) of the National Emergencies Act (50 U.S.C. 1622(d)), I am continuing for 1 year the national emergency declared in Executive Order 13441.

This notice shall be published in the *Federal Register* and transmitted to the Congress.

THE WHITE HOUSE,
July 28, 2011.

[FR Doc. 2011–19490
Filed 7–29–11; 8:45 am]
Billing code 3195–W1–P

Rules and Regulations

Federal Register

Vol. 76, No. 147

Monday, August 1, 2011

This section of the FEDERAL REGISTER contains regulatory documents having general applicability and legal effect, most of which are keyed to and codified in the Code of Federal Regulations, which is published under 50 titles pursuant to 44 U.S.C. 1510.

The Code of Federal Regulations is sold by the Superintendent of Documents. Prices of new books are listed in the first FEDERAL REGISTER issue of each week.

DEPARTMENT OF TRANSPORTATION

Federal Aviation Administration

14 CFR Part 39

[Docket No. FAA–2011–0547; Directorate Identifier 2011–NE–13–AD; Amendment 39–16757; AD 2011–15–10]

RIN 2120–AA64

Airworthiness Directives; Superior Air Parts and Lycoming Engines (Formerly Textron Lycoming) Fuel-Injected Engines

AGENCY: Federal Aviation Administration (FAA), DOT.

ACTION: Final rule; request for comments.

SUMMARY: We are adopting a new airworthiness directive (AD) for certain Superior Air Parts and Lycoming (formerly Textron Lycoming) fuel-injected engines. This AD requires removing from service, certain fuel servos. This AD was prompted by an accident involving a Piper PA32R–301. We are issuing this AD to correct the unsafe condition on these products.

DATES: This AD is effective August 16, 2011.

The Director of the Federal Register approved the incorporation by reference of a certain publication listed in the AD as of August 16, 2011.

We must receive comments on this AD by September 15, 2011.

ADDRESSES: You may send comments, using the procedures found in 14 CFR 11.43 and 11.45, by any of the following methods:

- *Federal eRulemaking Portal:* Go to *http://www.regulations.gov.* Follow the instructions for submitting comments.
- *Fax:* 202–493–2251.
- *Mail:* U.S. Department of Transportation, Docket Operations, M–30, West Building Ground Floor, Room W12–140, 1200 New Jersey Avenue, SE., Washington, DC 20590.
- *Hand Delivery:* U.S. Department of Transportation, Docket Operations, M–30, West Building Ground Floor, Room W12–140, 1200 New Jersey Avenue SE., Washington, DC 20590, between 9 a.m. and 5 p.m., Monday through Friday, except Federal holidays.

For service information identified in this AD, contact AVStar Fuel Systems, Inc., 1365 Park Lane South, Jupiter, FL 33458; phone: 561–575–1560; Web site: *www.avstardirect.com.* You may review copies of the referenced service information at the FAA, Engine & Propeller Directorate, 12 New England Executive Park, Burlington, MA 01803. For information on the availability of this material at the FAA, call 781–238–7125.

Examining the AD Docket

You may examine the AD docket on the Internet at *http://www.regulations.gov;* or in person at the Docket Management Facility between 9 a.m. and 5 p.m., Monday through Friday, except Federal holidays. The AD docket contains this AD, the regulatory evaluation, any comments received, and other information. The street address for the Docket Office (phone: 800–647–5527) is in the **ADDRESSES** section. Comments will be available in the AD docket shortly after receipt.

FOR FURTHER INFORMATION CONTACT: Neil Duggan, Aerospace Engineer, Atlanta Certification Office, FAA, 1701 Columbia Avenue, College Park, GA 30337; phone: 404–474–5576; fax: 404–474–5606; e-mail: *neil.duggan@faa.gov.*

SUPPLEMENTARY INFORMATION:

Discussion

On August 10, 2010, a Piper PA32R–301 airplane crashed after reporting a loss of engine power. The subsequent investigation by the National Transportation Safety Board suspects a faulty fuel servo, Bendix model RSA–10ED1. AVStar Fuel Systems (AFS) had overhauled the fuel servo using a new AFS diaphragm, part number (P/N) AV2541803. The diaphragm failed after 19 flight hours (FH) since new due to suspected manufacturing defects. AVStar Fuel Systems produces diaphragms, P/Ns AV2541801 and AV2541803 under a parts manufacturing authorization (PMA). Diaphragms produced from specific lot numbers could have stud threads that don't meet design, incomplete braze between the stud and hub, and studs made from lower temper material. Diaphragms from these lots could fail in fatigue prematurely. About 261 diaphragms, P/Ns AV2541801 and AV2541803, might still be service inside either AFS new or overhauled servos of any manufacturer (Bendix or Precision). Other overhaul facilities may also have purchased AFS diaphragms between the dates of May 21, 2010, and October 19, 2010, and used these diaphragms in their overhauls. This condition, if not corrected, could result in an in-flight engine shutdown due to a failed fuel servo diaphragm and damage to the airplane.

Relevant Service Information

We reviewed AFS Mandatory Service Bulletin (MSB) AFS–SB6, Revision 2, dated April 6, 2011. The MSB provides P/Ns and serial numbers (S/Ns) of affected servos.

FAA's Determination

We are issuing this AD because we evaluated all the relevant information and determined the unsafe condition described previously is likely to exist or develop in other products of the same type design.

AD Requirements

This AD requires, within 5 FH after the effective date of this AD, removing your fuel servo if AFS Diaphragm P/N AV2541801 or AV2541803 was installed at any time after May 20, 2010, as specified in AFS MSB AFS–SB6, Revision 2, dated April 6, 2011.

Differences Between the AD and the Service Information

AVStar Fuel Systems MSB AFS–SB6, Revision 2, dated April 6, 2011, doesn't specify a compliance time and recommends limiting special flight permits to delivery to a service location. This AD requires performing the required actions within 5 FH and prohibits special flight permits.

FAA's Justification and Determination of the Effective Date

An unsafe condition exists that requires the immediate adoption of this AD. The FAA has found that the risk to the flying public justifies waiving notice and comment prior to adoption of this rule because of the compliance requirement of 5 FH. Therefore, we find that notice and opportunity for prior

public comment are impracticable and that good cause exists for making this amendment effective in less than 30 days.

Comments Invited

This AD is a final rule that involves requirements affecting flight safety and was not preceded by notice and an opportunity for public comment. However, we invite you to send any written data, views, or arguments about this AD. Send your comments to an address listed under the **ADDRESSES** section. Include the docket number FAA–2011–0547 and Directorate Identifier 2011–NE–13–AD at the beginning of your comments. We specifically invite comments on the overall regulatory, economic, environmental, and energy aspects of this AD. We will consider all comments received by the closing date and may amend this AD because of those comments.

We will post all comments we receive, without change, to *http://www.regulations.gov,* including any personal information you provide. We will also post a report summarizing each substantive verbal contact we receive about this AD.

Costs of Compliance

We estimate that this AD affects 60,000 engines installed on aircraft of U.S. registry. We also estimate that it will take about 0.5 work-hour per engine to perform the inspection, 2.0 work-hours per engine to remove the servo from 261 engines with discrepant AFS Diaphragm P/N AV2541801 or AV2541803 installed and that the average labor rate is $85 per work-hour. We estimate the parts cost to be $565 per servo. Based on these figures, we estimate the total cost of the AD to U.S. operators to be $2,736,735.

Authority for This Rulemaking

Title 49 of the United States Code specifies the FAA's authority to issue rules on aviation safety. Subtitle I, section 106, describes the authority of the FAA Administrator. ''Subtitle VII: Aviation Programs'' describes in more detail the scope of the Agency's authority.

We are issuing this rulemaking under the authority described in subtitle VII, part A, subpart III, section 44701: ''General requirements.'' Under that section, Congress charges the FAA with promoting safe flight of civil aircraft in air commerce by prescribing regulations for practices, methods, and procedures the Administrator finds necessary for safety in air commerce. This regulation is within the scope of that authority because it addresses an unsafe condition that is likely to exist or develop on products identified in this rulemaking action.

Regulatory Findings

This AD will not have federalism implications under Executive Order 13132. This AD will not have a substantial direct effect on the States, on the relationship between the national government and the States, or on the distribution of power and responsibilities among the various levels of government.

For the reasons discussed above, I certify that this AD:

(1) Is not a ''significant regulatory action'' under Executive Order 12866,

(2) Is not a ''significant rule'' under DOT Regulatory Policies and Procedures (44 FR 11034, February 26, 1979),

(3) Will not affect intrastate aviation in Alaska, and

(4) Will not have a significant economic impact, positive or negative, on a substantial number of small entities under the criteria of the Regulatory Flexibility Act.

List of Subjects in 14 CFR Part 39

Air transportation, Aircraft, Aviation safety, Incorporation by reference, Safety.

Adoption of the Amendment

Accordingly, under the authority delegated to me by the Administrator, the FAA amends 14 CFR part 39 as follows:

PART 39—AIRWORTHINESS DIRECTIVES

■ 1. The authority citation for part 39 continues to read as follows:

Authority: 49 U.S.C. 106(g), 40113, 44701.

§ 39.13 [Amended]

■ 2. The FAA amends § 39.13 by adding the following new airworthiness directive (AD):

2011–15–10 Superior Air Parts and Lycoming Engines (formerly Textron Lycoming): Amendment 39–16757; Docket No. FAA–2011–0547; Directorate Identifier 2011–NE–13–AD.

(a) Effective Date

This AD is effective August 16, 2011.

(b) Affected ADs

None.

(c) Applicability

This AD applies to the Superior Air Parts engine models and Lycoming engine models listed in Table 1 of this AD with an AVStar Fuel Systems (AFS) fuel servo diaphragm, part numbers (P/Ns) AV2541801 and AV2541803, installed.

TABLE 1—AFFECTED LYCOMING AND SUPERIOR AIR PARTS ENGINES

Engine manufacturer	Engine model
Lycoming Engines	AEIO–320–D1B, –D2B, –E1A, –E1B, –E2A, –E2B.
	AIO–320–A1A, –A1B, –A2A, –A2B, –B1B, –C1B.
	IO–320–A1A, –A2A, –B1A, –B1B, –B1C, –B1E, –B1D, –B2A, –C1A, –C1B, –D1A, –D1C, –D1B, –E1A, –E1B, –E2A, –E2B, –F1A.
	LIO–320–B1A, –C1A.
	AEIO–360–A1A, –A1B, –A1B6, –A1E6, –A1C, –A1D, –A1E, –A2A, –A2B, –A2C, –B1B, –B1D, –B1F, –B1F6, –B1G6, –B2F, –B2F6, –B1H, –B4A, –H1A, –H1B.
	AIO–360–A1A, –A1B, –A2A, –A2B, –B1B.
	HIO–360–A1A, –A1B, –B1A, –B1B, –C1A, –C1B, –E1AD, –E1BD, –F1AD, –G1A.
	IO–360–A1A, –A1B, –A1B6, –A1B6D, –A1C, –A1D, –A1D6, –A1D6D, –A2A, –A2B, –A2C, –A3B6, –A3B6D, –A3D6D, –B1A, –B1B, –B1C, –B1D, –B1E, –B1F, –B1F6, –B1G6, –B2E, –B2F, –B2F6, –B4A, –C1A, –C1B, –C1C, –C1C6, –C1D6, –C1E6, –C1E6D, –C1F,–C1G6, –D1A, –E1A, –F1A, –J1AD, –J1A6D, –K2A, –L2A, –M1A, –M1B.
	LIO–360–C1E6, –M1A.
	TIO–360–A1A, –A1B, –A3B6, –C1A6D.

TABLE 1—AFFECTED LYCOMING AND SUPERIOR AIR PARTS ENGINES—Continued

Engine manufacturer	Engine model
	IO–540–A1A5, –B1A5, –B1B5, –B1C5, –C1B5, –C1C5, –C2C, –C4B5, –C4B5D, –C4D5, –C4C5, –C4D5D, –D4A5, –D4B5, –D4C5, –E1A5, –E1B5, –E1C5, –G1A5, –G1B5, –G1C5, –G1D5, –G1E5, –G1F5, –J4A5, –K1A5, –K1A5D, –K1B5, –K1B5D, –K1C5, –K1D5, –K1E5, –K1E5D, –K1F5, –K1F5D, –K1G5, –K1G5D, –K1H5, –K1J5, –K1J5D, –K1K5, –K2A5, –L1A5, –L1A5D, –L1B5D, –L1C5, –M1A5, –M1A5D, –M1B5D, –M1C5, –M2A5D, –N1A5, –P1A5, –R1A5, –S1A5, –T4A5D, –T4B5, –T4B5D, –T4C5D, –U1A5D, –U1B5D, –V4A5D, –V4A5, –W1A5, –W1A5D, –W3A5D, –AA1A5, –AA1B5, –AB1A5, –AC1A5, –AE1A5, –AF1A5.
	IGO–480–A1A6, –A1B6.
	AEIO–540–D4A5, –D4B5, –D4C5, –D4D5, –L1B5D, –L1B5, –L1D5.
	IVO–540–A1A.
	TIO–540–A1A, –A1B, –A2A, –A2B, –A1C, –A2C, –C1A, –E1A, –F2BD, –G1A, –H1A, –J2B, –J2BD, –K1AD, –N2BD, –R2AD, –S1AD, –T2AD, –U2A, –V2AD, –W2A, –AA1AD, –AB1AD, –AB1BD, –AE2A, –AF1A, –AF1B, –AG1A, –AH1A, –AJ1A, –AK1A.
	LTIO–540–F2BD, –J2B, –J2BD, –K1AD, –N2BD, –R2AD, –U2A, –V2AD, –W2A.
	IO–720–A1A, –A1B, –A1BD, –B1A, –B1B, –B1BD, –C1B, –C1BD, –D1B, –D1BD, –D1C, –D1CD.
	TIGO–541–B1A, –C1A, –D1A, –D1B, –E1A, –G1AD.
Superior Air Parts	IO–360–A1A1, A1A2, A2A1, A2A2, A3A1, A3A2, B1A1, B1A2, B2A1, B2A2, B3A1, B3A2, B4A1, B4A2, B5A1, B5A2, B6A1, B6A2, C1A1, C1A2, C2A1, C2A2, C2A1, C3A2, D1A1, D1A2, D2A1, D2A2, D3A1, D3A2, D4A1, D4A2, D5A1, D5A2, D6A1, D6A2, E1A1, E1A2, E2A1, E2A2, E3A1, E3A2.

(d) Unsafe Condition

This AD was prompted by an accident involving a Piper PA32R–301. We are issuing this AD to correct the unsafe condition on these products.

(e) Compliance

Comply with this AD within the compliance times specified, unless already done.

(f) Remove Fuel Servo

If an AFS fuel servo diaphragm P/N AV2541801 or AV2541803 was installed in your fuel servo at any time after May 20, 2010, do the following as specified AVStar Fuel Systems (AFS) Mandatory Service Bulletin (MSB) AFS–SB6, Revision 2, dated April 6, 2011:

(1) Before further flight remove the fuel servo.

(2) After the effective date of this AD, don't install any affected fuel servo containing a discrepant AVStar fuel servo diaphragm, P/N AV2541801 or AV2541803, as listed in AFS MSB AFS–SB6, Revision 2, dated April 6, 2011.

(g) Special Flight Permit

We will not issue a special flight permit.

(h) Alternative Methods of Compliance (AMOCs)

The Manager, Atlanta Aircraft Certification Office, FAA, has the authority to approve AMOCs for this AD, if requested using the procedures found in 14 CFR 39.19.

(i) Related Information

For more information about this AD, contact Neil Duggan, Aerospace Engineer, Atlanta Certification Office, FAA, 1701 Columbia Avenue, College Park, GA 30337; phone: (404) 474–5576; fax: (404) 474–5606; e-mail: *neil.duggan@faa.gov.*

(j) Material Incorporated by Reference

(1) You must use AVStar Fuel Systems Mandatory Service Bulletin AFS–SB6, Revision 2, dated April 6, 2011, to do the actions required by this AD, unless the AD specifies otherwise. The Director of the Federal Register approved the incorporation by reference (IBR) under 5 U.S.C. 552(a) and 1 CFR part 51 of the following service information on the date specified:

(2) The Director of the Federal Register approved the incorporation by reference of AVStar Fuel Systems Mandatory Service Bulletin AFS–SB6, Revision 2, dated April 6, 2011, on September 6, 2011 under 5 U.S.C. 552(a) and 1 CFR part 51.

(3) For service information identified in this AD, contact AVStar Fuel Systems, Inc., 1365 Park Lane South, Jupiter, FL 33458; 561–575–1560; Web site: *http://www.avstardirect.com.*

(4) You may review copies of the service information at the FAA, 12 New England Executive Park, Burlington, MA 01803. For information on the availability of this material at the FAA, call 781–238–7125.

(5) You may also review copies of the service information that is incorporated by reference at the National Archives and Records Administration (NARA). For information on the availability of this material at an NARA facility, call 202–741–6030, or go to *http://www.archives.gov/federal_register/code_of_federal_regulations/ibr_locations.html.*

Issued in Burlington, Massachusetts, on July 13, 2011.

Colleen M. D'Alessandro,

Acting Manager, Engine & Propeller Directorate, Aircraft Certification Service.

[FR Doc. 2011–18168 Filed 7–29–11; 8:45 am]

BILLING CODE 4910–13–P

DEPARTMENT OF TRANSPORTATION

Federal Aviation Administration

14 CFR Part 39

[Docket No. FAA–2011–0450; Directorate Identifier 2011–CE–010–AD; Amendment 39–16758; AD 2011–15–11]

RIN 2120–AA64

Airworthiness Directives; Cessna Aircraft Company (Cessna) Models 337, 337A (USAF 02B), 337B, 337C, 337D, 337E, T337E, 337F, T337F, 337G, T337G, M337B, F 337E, FT337E, F 337F, FT337F, F 337G, and FT337GP Airplanes

AGENCY: Federal Aviation Administration (FAA), DOT.

ACTION: Final rule.

SUMMARY: We are adopting a new airworthiness directive (AD) for the products listed above. This AD requires inspecting the wings for internal and external damage, repairing any damage, reinforcing the wings, installing operational limitation placards in the cockpit, and adding limitations to the airplane flight manual supplement. This AD was prompted by a review of installed Flint Aero, Inc. wing tip auxiliary fuel tanks, Supplemental Type Certificate (STC) SA5090NM. We are issuing this AD to detect and correct damage in the wings and to prevent overload failure of the wing due to the installation of the STC. Damage in the wing or overload failure of the wing could result in structural failure of the wing, which could result in loss of control.

DATES: This AD is effective September 6, 2011.

The Director of the Federal Register approved the incorporation by reference of certain publications listed in the AD as of September 6, 2011.

ADDRESSES: For service information identified in this AD, contact Flint Aero, Inc., 1942 Joe Crosson Drive, El Cajon, CA 92020; phone: (619) 448–1551; fax: (619) 448–1571; Internet: *http://www.flintaero.com.* You may review copies of the referenced service information at the FAA, Small Airplane Directorate, 901 Locust, Kansas City, MO 64106. For information on the availability of this material at the FAA, call (816) 329–4148.

Examining the AD Docket

You may examine the AD docket on the Internet at *http://www.regulations.gov;* or in person at the Docket Management Facility between 9 a.m. and 5 p.m., Monday through Friday, except Federal holidays. The AD docket contains this AD, the regulatory evaluation, any comments received, and other information. The address for the Docket Office (phone: 800–647–5527) is Document Management Facility, U.S. Department of Transportation, Docket Operations, M–30, West Building Ground Floor, Room W12–140, 1200 New Jersey Avenue, SE., Washington, DC 20590.

FOR FURTHER INFORMATION CONTACT: Dara Albouyeh, Aerospace Engineer, FAA, Los Angeles Aircraft Certification Office, 3960 Paramount Blvd., Lakewood, CA 90712; phone: (562) 627–5222; fax: (562) 627–5210; e-mail: *dara.albouyeh@faa.gov.*

SUPPLEMENTARY INFORMATION:

Discussion

We issued a notice of proposed rulemaking (NPRM) to amend 14 CFR part 39 to include an AD that would apply to the specified products. That NPRM published in the **Federal Register** on May 4, 2011 (76 FR 25264). That NPRM proposed to require inspecting the wings for internal and external damage, repairing any damage, reinforcing the wings, installing operational limitation placards in the cockpit, and adding limitations to the Flint Aero, Inc. Airplane Flight Manual Supplement.

Comments

We gave the public the opportunity to participate in developing this AD. The following presents the comments received on the proposal and the FAA's response to each comment.

Request To Remove Certain Steps From Appendix 1

Dennis L. Hamblin from Flint Aero, Inc. stated that steps 11, 13, and 14 should be removed from Appendix 1 of this AD. The inspection procedures in Appendix 1 are focused on damage caused by trimming of the close-out rib to allow passage of the fuel line. The Flint Aero, Inc. STC kit provides a close-out rib that replaces the Cessna close-out rib. This configuration allows for the passage of the fuel line. Additionally, the Flint Aero, Inc. STC kit provides reinforcement doublers for all added inspection openings/cutouts; therefore, there should be no unreinforced cutouts.

We do not agree with the commenter. All steps in Appendix 1 are required to check for any damage to the affected close-out rib, spar cap, and cut-outs that may have been caused by an overload condition regardless of the STC installation configuration.

We have not changed the final rule AD action based on this comment.

Request To Incorporate Revised Service Information

Flint Aero, Inc. issued a revision to Service Bulletin FA2 to correct a part number reference. We inferred that Flint Aero, Inc. wanted the FAA to include reference to the revised service bulletin into the final rule AD action.

We agree. We have revised the final rule AD action to incorporate the revised service bulletin.

Conclusion

We reviewed the relevant data, considered the comments received, and determined that air safety and the public interest require adopting the AD with the change described previously and any minor editorial changes. We have determined that these minor changes:

- Are consistent with the intent that was proposed in the NPRM for correcting the unsafe condition; and
- Do not add any additional burden upon the public than was already proposed in the NPRM.

We also determined that these changes will not increase the economic burden on any operator or increase the scope of the AD.

Costs of Compliance

We estimate that this AD affects 33 airplanes of U.S. registry.

We estimate the following costs to comply with this AD:

ESTIMATED COSTS

Action	Labor cost	Parts cost	Cost per product	Cost on U.S. operators
Inspection of the wing for damage	5 work-hours × $85 per hour = $425 per inspection cycle.	Not applicable	$425 per inspection cycle.	$14,025 per inspection cycle.
Fabricating and installing placards in the cockpit.	1 work-hour × $85 per hour = $85.	Not applicable	$85	$2,805.
Modifying the Limitations section of the Flint Aero, Inc. Airplane Flight Manual Supplement.	.5 work-hour × $85 per hour = $42.50.	Not applicable	$42.50	$1,402.50.
Reinforcing the upper wing skin, stringer, and wing front spar cap.	25 work-hours × $85 per hour = $2,125.	$1,070	$3,195	$105,435.

Authority for This Rulemaking

Title 49 of the United States Code specifies the FAA's authority to issue rules on aviation safety. Subtitle I, section 106, describes the authority of the FAA Administrator. Subtitle VII: Aviation Programs, describes in more detail the scope of the Agency's authority.

We are issuing this rulemaking under the authority described in subtitle VII, part A, subpart III, section 44701: ''General requirements.'' Under that section, Congress charges the FAA with promoting safe flight of civil aircraft in air commerce by prescribing regulations for practices, methods, and procedures the Administrator finds necessary for safety in air commerce. This regulation is within the scope of that authority because it addresses an unsafe condition that is likely to exist or develop on

products identified in this rulemaking action.

Regulatory Findings

This AD will not have federalism implications under Executive Order 13132. This AD will not have a substantial direct effect on the States, on the relationship between the national government and the States, or on the distribution of power and responsibilities among the various levels of government.

For the reasons discussed above, I certify that this AD:

(1) Is not a ''significant regulatory action'' under Executive Order 12866,

(2) Is not a ''significant rule'' under DOT Regulatory Policies and Procedures (44 FR 11034, February 26, 1979),

(3) Will not affect intrastate aviation in Alaska, and

(4) Will not have a significant economic impact, positive or negative, on a substantial number of small entities under the criteria of the Regulatory Flexibility Act.

List of Subjects in 14 CFR Part 39

Air transportation, Aircraft, Aviation safety, Incorporation by reference, Safety.

Adoption of the Amendment

Accordingly, under the authority delegated to me by the Administrator, the FAA amends 14 CFR part 39 as follows:

PART 39—AIRWORTHINESS DIRECTIVES

■ 1. The authority citation for part 39 continues to read as follows:

Authority: 49 U.S.C. 106(g), 40113, 44701.

§ 39.13 [Amended]

■ 2. The FAA amends § 39.13 by adding the following new airworthiness directive (AD):

2011–15–11 Cessna Aircraft Company: Amendment 39–16758; Docket No. FAA–2011–0450; Directorate Identifier 2011–CE–010–AD.

(a) Effective Date

This AD is effective September 6, 2011.

(b) Affected ADs

AD 2010–21–18, Amendment 39–16478, is related to the subject of this AD.

(c) Applicability

This AD applies to Cessna Aircraft Company (Cessna) Models 337, 337A (USAF 02B), 337B, 337C, 337D, 337E, T337E, 337F, T337F, 337G, T337G, M337B, F 337E, FT337E, F 337F, FT337F, F 337G, and FT337GP airplanes, all serial numbers, that:

(1) Are certificated in any category; and

(2) Are or have ever been modified by Flint Aero, Inc. Supplemental Type Certificate (STC) SA5090NM.

(d) Subject

Joint Aircraft System Component (JASC)/ Air Transport Association (ATA) of America Code 57; Wings.

(e) Unsafe Condition

This AD was prompted by a review of installed Flint Aero, Inc. wing tip auxiliary fuel tanks, STC SA5090NM. We are issuing this AD to detect and correct damage in the wings and to prevent overload failure of the wing due to the installation of the STC. Damage in the wing or overload failure of the wing could result in structural failure of the wing, which could result in loss of control.

(f) Compliance

Comply with this AD within the compliance times specified, unless already done.

(g) Required Actions

(1) Within the next 50 hours time-in-service (TIS) after September 6, 2011 (the effective date of this AD) or within 30 days after September 6, 2011 (the effective date of this AD), whichever occurs first, do a general and focused inspection of the left and right wing for internal and external damage at wing stations (WSTA) 150 and 177. Do the inspections following Appendix 1 of this AD.

(2) After the inspection required in paragraph (g)(1) of this AD if no damage was found and before the modification required in paragraph (g)(5) of this AD is incorporated, anytime severe and/or extreme turbulence is encountered during flight, before the next flight do a focused inspection of the wing for damage following steps 1, 2, 3, 4, 7, and 10 in Appendix 1 of this AD. Also inspect for signs of distress in the upper front spar in the area around WSTA 150 and 177. The definition of severe and extreme turbulence can be found in table 7–1–9 of the FAA Aeronautical Information Manual (AIM). You may obtain a copy of the FAA AIM at *http://www.faa.gov/air_traffic/publications/atpubs/aim/.*

(3) For airplanes that have not had the modification specified in paragraphs (g)(4) and (g)(5) incorporated, within the next 50 hours time-in-service (TIS) after September 6, 2011 (the effective date of this AD) or within 30 days after September 6, 2011 (the effective date of this AD), fabricate a placard (using at least ⅛-inch letters) with the following words and install the placard on the instrument panel within the pilot's clear view:

(i) ''MAINTAIN AT LEAST 12 GAL OF FUEL IN EACH WING TIP FUEL TANK FOR AIRPLANE WEIGHTS BETWEEN 3,400 LBS AND 4,330 LBS.''

(ii) ''MAINTAIN FULL FUEL IN EACH WING TIP FUEL TANK FOR AIRPLANE WEIGHTS AT OR ABOVE 4,330 LBS.''

(4) If damage or signs of distress are found during the inspections required in paragraphs (g)(1) and (g)(2) of this AD, before further flight do the following:

(i) Repair all damaged and distressed parts following FAA Advisory Circular (AC) 43.13–1B, Chapter 4, which can be found at *http://rgl.faa.gov/;*

(ii) Incorporate the modification reinforcement specified in Flint Aero, Inc. Service Bulletin FA2, Rev 2, dated April 8, 2011, or Flint Aero, Inc. Service Bulletin FA2, Rev 3, dated May 3, 2011, following Flint Aero, Inc. Drawing FA2, Rev A, dated April 8, 2011;

(iii) Remove the placard specified in paragraph (g)(3) of this AD;

(iv) Fabricate a new placard (using at least ⅛-inch letters) with the following words and install the placard on the instrument panel within the pilot's clear view: ''MAINTAIN AT LEAST 12 GAL OF FUEL IN EACH WING TIP FUEL TANK FOR AIRPLANE WEIGHTS AT OR ABOVE 4,330 LBS''; and

(v) Incorporate the information from Appendix 2 of this AD into the Limitations section of the Flint Aero, Inc. Airplane Flight Manual Supplement.

(5) If no damage or signs of distress are found during the inspections required in paragraphs (g)(1) and (g)(2) of this AD, within the next 100 hours TIS after September 6, 2011 (the effective date of this AD) or within 12 months after September 6, 2011 (the effective date of this AD), whichever occurs first, do the following:

(i) Incorporate the modification reinforcement specified in Flint Aero, Inc. Service Bulletin FA2, Rev 2, dated April 8, 2011, or Flint Aero, Inc. Service Bulletin FA2, Rev 3, dated May 3, 2011, following Flint Aero, Inc. Drawing FA2, Rev A, dated April 8, 2011;

(ii) Remove the placard specified in paragraph (g)(3) of this AD;

(iii) Fabricate a new placard (using at least 1/8-inch letters) with the following words and install the placard on the instrument panel within the pilot's clear view: ''MAINTAIN AT LEAST 12 GAL OF FUEL IN EACH WING TIP FUEL TANK FOR AIRPLANE WEIGHTS AT OR ABOVE 4,330 LBS''; and

(iv) Incorporate the information from Appendix 2 of this AD into the Limitations section of the Flint Aero, Inc. Airplane Flight Manual Supplement.

(6) You may incorporate the modification reinforcement specified in Flint Aero, Inc. Service Bulletin FA2, Rev 2, dated April 8, 2011, or Flint Aero, Inc. Service Bulletin FA2, Rev 3, dated May 3, 2011, following Flint Aero, Inc. Drawing FA2, Rev A, dated April 8, 2011, at any time after the inspection required in paragraph (g)(1) of this AD but no later than the compliance time specified in paragraph (g)(5) of this AD as long as no cracks were found. As required in paragraph (g)(4) of this AD, the modification reinforcement must be incorporated before further flight if damage or signs of distress are found.

(h) Alternative Methods of Compliance (AMOCs)

(1) The Manager, Los Angeles Aircraft Certification Office (ACO), FAA, has the authority to approve AMOCs for this AD, if requested using the procedures found in 14 CFR 39.19. In accordance with 14 CFR 39.19, send your request to your principal inspector or local Flight Standards District Office, as

appropriate. If sending information directly to the manager of the ACO, send it to the attention of the person identified in the Related Information section of this AD.

(2) Before using any approved AMOC, notify your appropriate principal inspector, or lacking a principal inspector, the manager of the local flight standards district office/certificate holding district office.

(i) Related Information

For more information about this AD, contact Dara Albouyeh, Aerospace Engineer, FAA, Los Angeles ACO, 3960 Paramount Blvd., Lakewood, CA 90712; phone: (562) 627–5222; fax: (562) 627–5210; e-mail: *dara.albouyeh@faa.gov.*

(j) Material Incorporated by Reference

(1) You must use the following service information to do the actions required by this AD, unless the AD specifies otherwise. The Director of the Federal Register approved the incorporation by reference (IBR) under 5 U.S.C. 552(a) and 1 CFR part 51 of the following service information on September 6, 2011:

(i) Flint Aero, Inc. Service Bulletin FA2, Rev 2, dated April 8, 2011;

(ii) Flint Aero, Inc. Service Bulletin FA2, Rev 3, dated May 3, 2011; and

(iii) Flint Aero, Inc. Drawing FA2, Rev A, dated April 8, 2011.

(2) For service information identified in this AD, contact Flint Aero, Inc., 1942 Joe Crosson Drive, El Cajon, CA 92020; phone: (619) 448–1551; fax: (619) 448–1571; Internet: *http://www.flintaero.com.*

(3) You may review copies of the referenced service information at the FAA, Small Airplane Directorate, 901 Locust, Kansas City, MO 64106. For information on the availability of this material at the FAA, call (816) 329–4148.

(4) You may also review copies of the service information that is incorporated by reference at the National Archives and Records Administration (NARA). For information on the availability of this material at an NARA facility, call 202–741–6030, or go to *http://www.archives.gov/federal_register/code_of_federal_regulations/ibr_locations.html.*

Appendix 1 to AD 2011–15–11

General and Focused Inspection Procedures

Perform a general and focused inspection of the wing for internal and external damage from wing station (WSTA) 23 to the wing tip. The general inspection must be performed in accordance with 14 CFR 43.15(c), using a checklist that includes at least the scope and detail of the items contained in Appendix D of 14 CFR part 43. The focused inspection must include the items listed below. Remove all wing access panels to conduct the inspections. Do these inspections following the manufacturer's service information and any other appropriate guidance, such as FAA Advisory Circular (AC) 43.13–1B Acceptable Methods, Techniques, and Practices—Aircraft Inspection and Repair. AC 43.13–1B can be found at *http://rgl.faa.gov/.*

Focused inspection items to look for:

(1) Wrinkles in upper wing skins, from the outboard edge on the fuel tank access covers (WSTA 150 or 177) to the WSTA 222 (See View B, Figure 3).

(2) Wrinkles in the upper wing skins from WSTA 55 to 66, adjacent to the booms (See View E, Figure 6).

(3) Cracking of the upper wing skins. Pay particular attention to any wrinkles, the radius between stiffeners at WSTA 150 (under fuel tank covers), and unreinforced access holes (See View B, Figure 3).

(4) Working (smoking) rivets outboard of the wing tank access covers.

(5) Fasteners with less than two diameters edge distance.

(6) Fasteners with less than four diameters center to center spacing.

(7) Looseness of attachments of the tip extension to the wing and wing tip to wing extension when pushing up and down on the tip.

(8) Any signs of distress along both front and rear spars, particularly in the area around WSTA 177.

(9) Inspect under any repairs to the upper skins, particularly in the area just outboard of the fuel tank access covers as these may be covering up existing damage.

(10) Inter-rivet buckling of the stringers attached to the upper surface skin, outboard of the fuel tank access covers (See View F, Figure 7).

(11) Inspect rib at WSTA 222 for damage. Trimming of the rib may have been done to allow installation of fuel lines (See View A, Figure 2). Repair in accordance with AC 43.13–1B, Chapter 4, paragraph 4–58(g) and Figure 4–14, or by using another FAA-approved method that restores equivalent strength of the wing rib.

Appendix 1 to AD 2011–15–11

General and Focused Inspection Procedures (Continued)

(12) Inspect and identify screws, installed in tapped (threaded) holes in metal substructure, used to attach wing tips, stall fences, fuel and electrical components, and access doors. For tapped holes, remove fastener and open up the diameter to provide a smooth bore hole, for the smallest oversize fastener, using close tolerance holes noted in AC 43.13–1B, paragraph 7–39 or other FAA-approved scheme. Maintain minimum 2 x fastener diameter edge distance and 4 x fastener diameter center to center spacing. Select and install new, equivalent strength or stronger, fasteners with nuts/collars in accordance with AC 43.13–1B, Chapter 7 and AC 43.13–2B, paragraph 108 or other FAA-approved repair. New fasteners must not have threads in bearing against the sides of the holes.

(13) Inspect wing skins for unreinforced cutouts. (See View C, Figure 4).

(14) Inspect the upper spar cap horizontal flanges for open holes (See View D, Figure 5).

BILLING CODE 4910–13–P

Appendix 1 to AD 2011-15-11 (Continued)

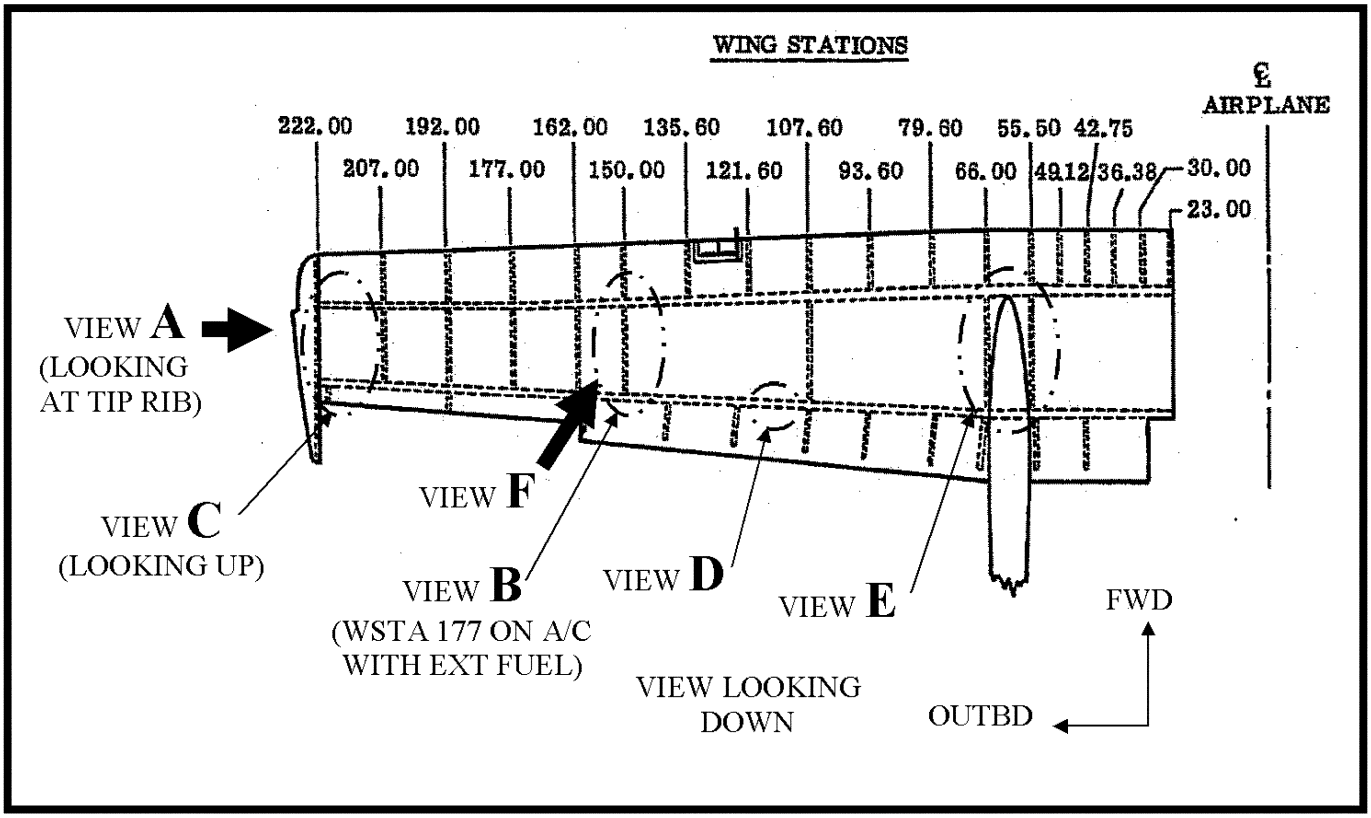

Figure 1

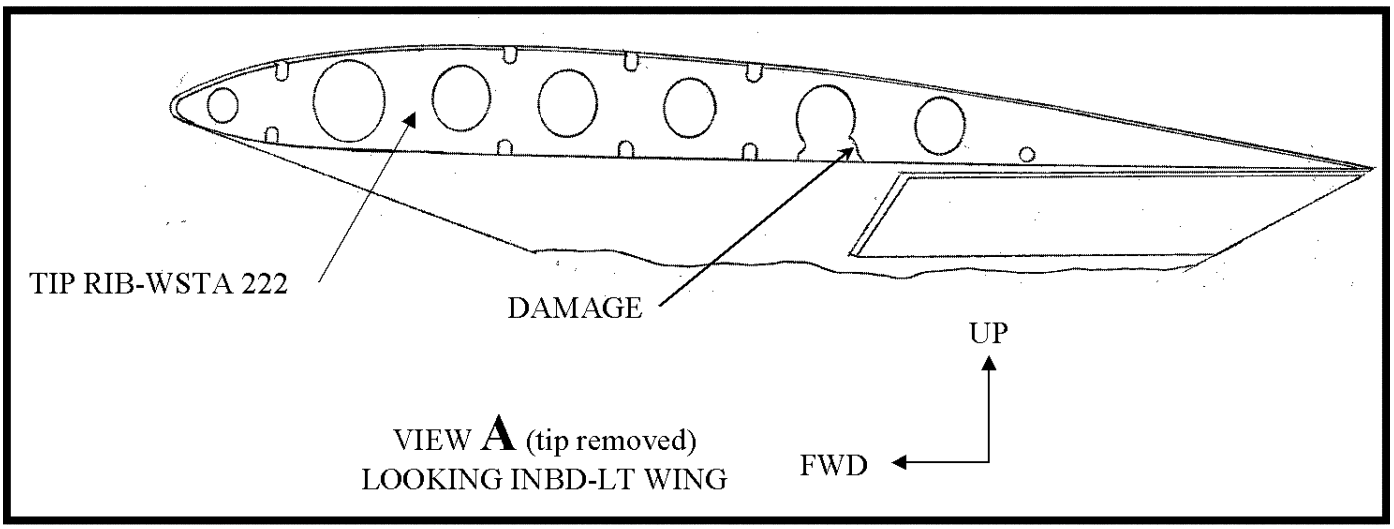

Figure 2

Appendix 1 to AD 2011-15-11 (Continued)

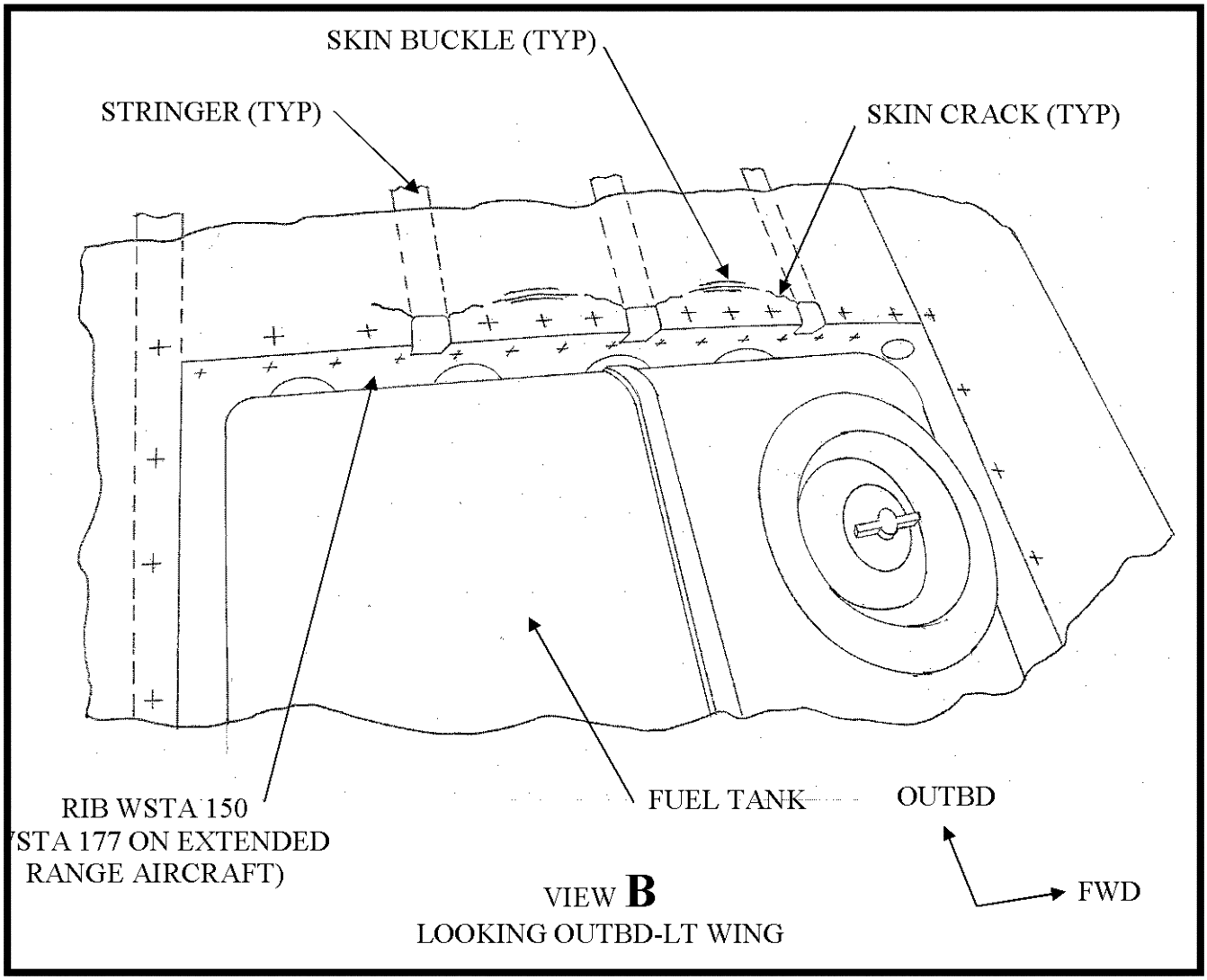

Figure 3

Appendix 1 to AD 2011-15-11 (Continued)

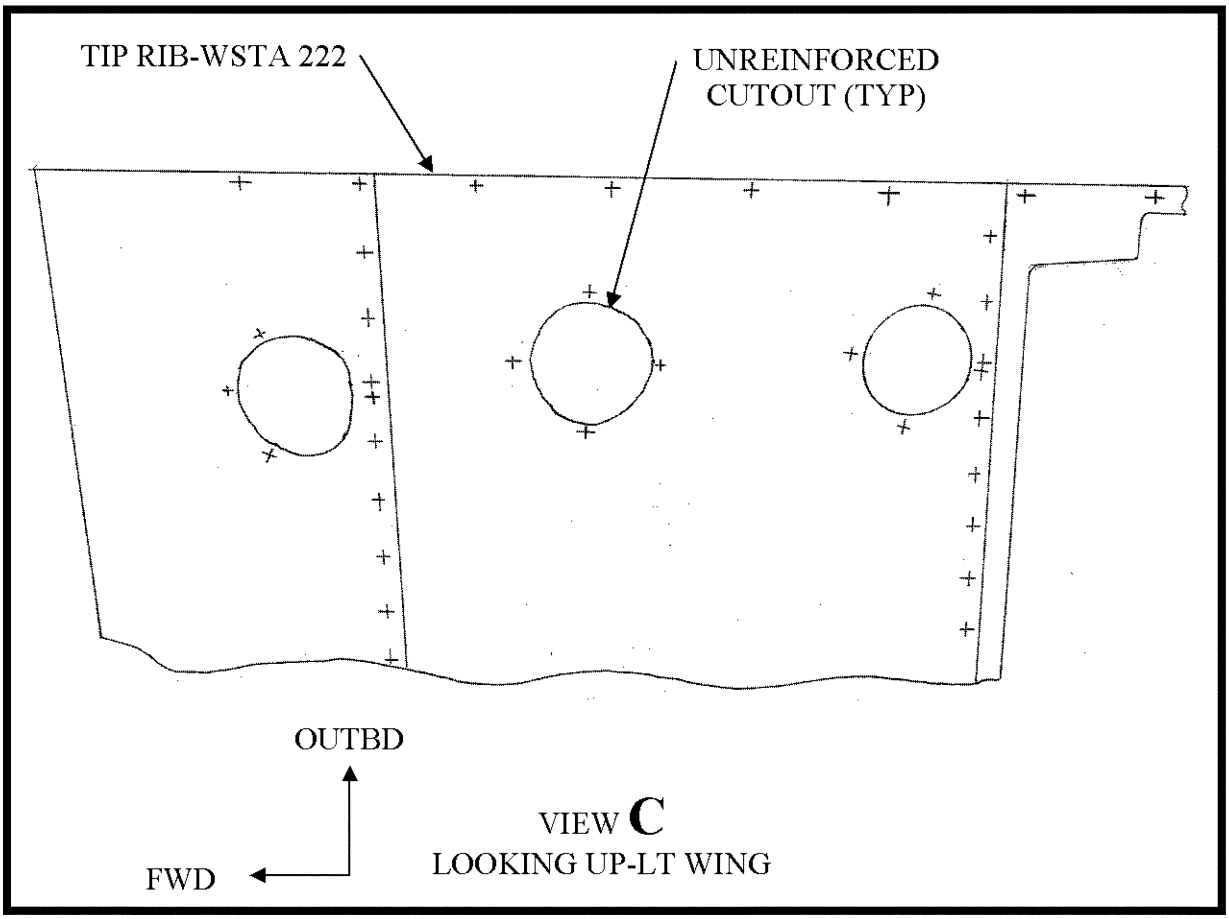

Figure 4

Appendix 1 to AD 2011-15-11 (Continued)

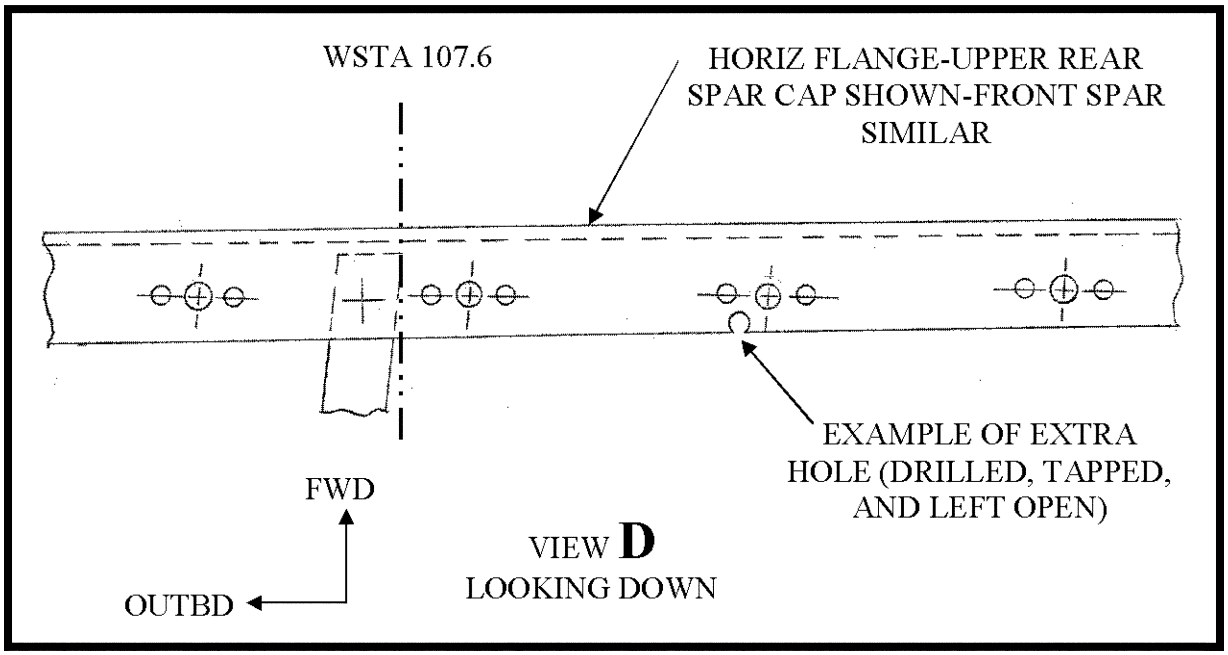

Figure 5

Appendix 1 to AD 2011-15-11 (Continued)

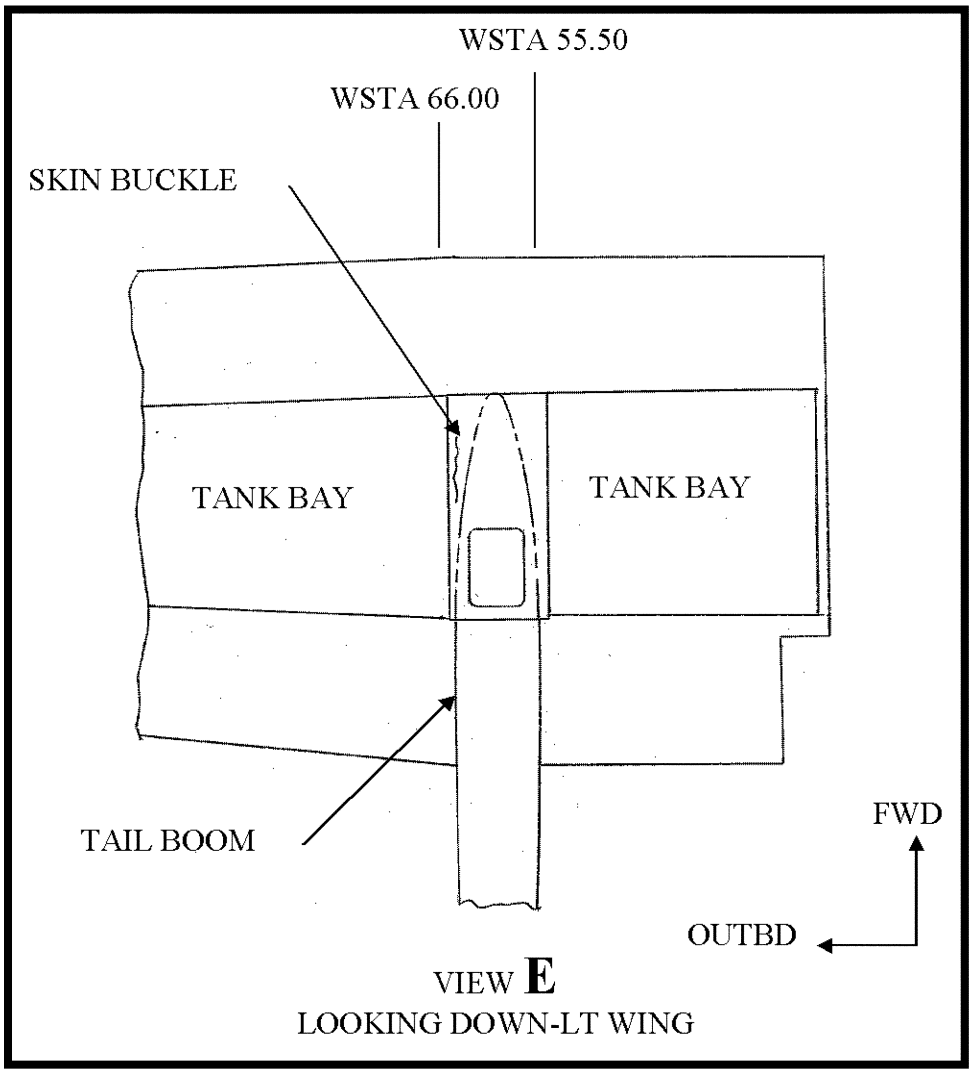

Figure 6

Appendix 1 to AD 2011-15-11 (Continued)

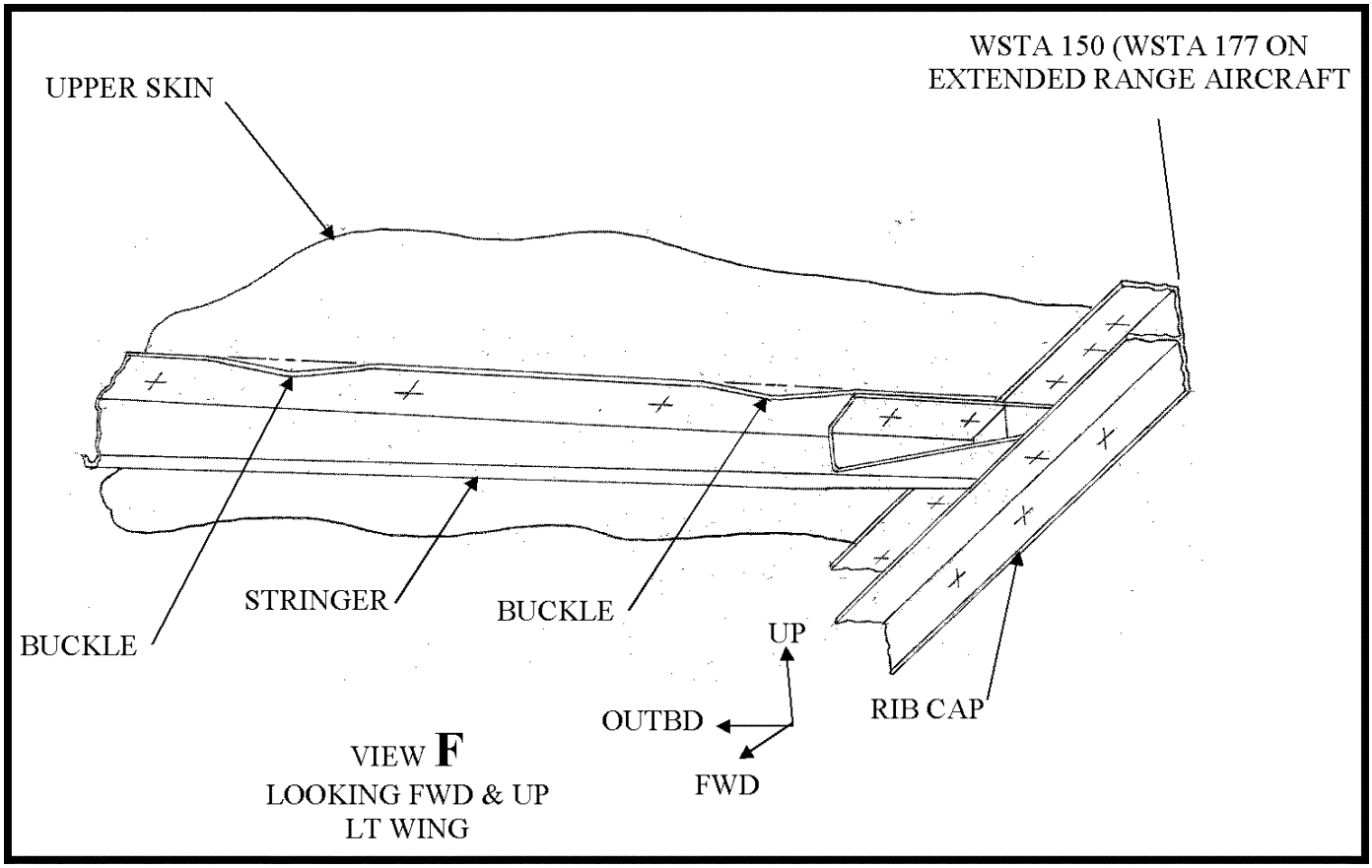

Figure 7

Appendix 2 to AD 2011–15–11

Airworthiness Limitations for the Flint Aero, Inc. Airplane Flight Manual Supplement.

''MAINTAIN AT LEAST 12 GAL OF FUEL IN EACH WING TIP FUEL TANK FOR AIRPLANE WEIGHTS AT OR ABOVE 4,330 LBS.''

Issued in Kansas City, Missouri, on July 14, 2011.

Earl Lawrence,

Manager, Small Airplane Directorate, Aircraft Certification Service.

[FR Doc. 2011–18242 Filed 7–29–11; 8:45 am]

BILLING CODE 4910–13–C

COMMODITY FUTURES TRADING COMMISSION

17 CFR Part 40

RIN 3038–AD07

Provisions Common to Registered Entities; Correction

AGENCY: Commodity Futures Trading Commission.

ACTION: Final rule; Correction.

SUMMARY: This document corrects incorrect text published in the **Federal Register** of July 27, 2011, regarding Provisions Common to Registered Entities.

DATES: *Effective date:* September 26, 2011.

FOR FURTHER INFORMATION CONTACT: Bella Rozenberg, Assistant Deputy Director, Division of Market Oversight (''DMO''), at 202–418–5119 or *brozenberg@cftc.gov*, Riva Spear Adriance, Associate Director, DMO at 202–418–5494 or *radriance@cftc.gov*, and Joseph R. Cisewski, Attorney Advisor, DMO at 202–418–5718 or *jcisewski@cftc.gov*, in each case, at the Commodity Futures Trading Commission, Three Lafayette Centre, 1155 21st Street, NW., Washington, DC 20581.

SUPPLEMENTARY INFORMATION: In FR Doc. 2011–18661 appearing on page 44776 in the **Federal Register** issue of Wednesday, July 27, 2011, the following correction is made:

§ 40.6 [Corrected]

On page 44794, in the right column, in § 40.6(a), the text ''other than a rule delisting or withdrawing the certification of a product,'' is corrected to read, ''other than a rule delisting or withdrawing the certification of a product with no open interest and submitted in compliance with §§ 40.6(a)(1)–(2) and § 40.6(a)(7),''.

Dated: July 27, 2011.

David A. Stawick,

Secretary of the Commission.

[FR Doc. 2011–19385 Filed 7–29–11; 8:45 am]

BILLING CODE P

DEPARTMENT OF LABOR

Employment and Training Administration

20 CFR Part 655

RIN 1205–AB61

Wage Methodology for the Temporary Non-Agricultural Employment H–2B Program; Amendment of Effective Date

AGENCY: Employment and Training Administration, Labor.

ACTION: Final rule.

SUMMARY: The Department of Labor (we or us) is amending the effective date of Wage Methodology for the Temporary Non-agricultural Employment H–2B Program; Final Rule, 76 FR 3452, Jan. 19, 2011 (the Wage Rule). The Wage Rule revised the methodology by which we calculate the prevailing wages to be paid to H–2B workers and United States (U.S.) workers recruited in connection with a temporary labor certification for use in petitioning the Department of Homeland Security to employ a nonimmigrant worker in H–2B status. The effective date of the Wage Rule was set at January 1, 2012. This Final Rule revises the effective date of the Wage Rule to 60 days after the publication date of this Final Rule.

DATES: The effective date of the final regulations published in the **Federal Register** on January 19, 2011, at 76 FR 3452, is September 30, 2011.

FOR FURTHER INFORMATION CONTACT: William L. Carlson, Ph.D., Administrator, Office of Foreign Labor Certification, ETA, U.S. Department of Labor, 200 Constitution Avenue, NW., Room C–4312, Washington, DC 20210; Telephone (202) 693–3010 (this is not a toll-free number). Individuals with hearing or speech impairments may access the telephone number above via TTY by calling the toll-free Federal Information Relay Service at 1–877–889–5627 (TTY/TDD).

SUPPLEMENTARY INFORMATION:

I. Amendment of Effective Date of the Wage Rule

A. The Prevailing Wage Final Rule

We published the Wage Rule on January 19, 2011. Under the Wage Rule, the prevailing wage for the H–2B program is based on the highest of the following: The wage rate established under an agreed-upon collective bargaining agreement; the wage rate established under the Davis-Bacon Act (DBA) or the McNamara O'Hara Service Contract Act (SCA) for that occupation in the area of intended employment; or the arithmetic mean wage rate established by the Occupational Employment Statistics (OES) wage survey for that occupation in the area of intended employment. The Wage Rule also permits the use of private wage surveys in very limited circumstances. Lastly, the Wage Rule required the new wage methodology to apply to all work performed on or after January 1, 2012. We selected the January 1, 2012 effective date because ''many employers already may have planned for their labor needs and operations for this year in reliance on the existing prevailing wage methodology. In order to provide employers with sufficient time to plan for their labor needs for the next year and to minimize the disruption to their operations, the Department is delaying implementation of this Final Rule so that the prevailing wage methodology set forth in this Rule applies only to wages paid for work performed on or after January 1, 2012.'' 76 FR 3462, Jan. 19, 2011.

On January 24, 2011, the plaintiffs in *CATA* v. *Solis,* Civil No. 2:09–cv–240–LP (E.D. Pa.), filed a motion for an order to require the Department to comply with the court's August 30, 2010 order,[1] arguing that the Wage Rule violated the Administrative Procedure Act (APA) because ''it did not provide notice to Plaintiffs and the public that DOL was considering delaying implementation of the new regulation and because DOL's reason for delaying implementation of the new regulation is arbitrary.'' *CATA* v. *Solis,* Dkt. No. 103–1, Plaintiff's Motion for an Order Enforcing the Judgment at 2 (Jan. 24, 2011). On June 16, 2011, the court issued a ruling that invalidated the January 1, 2012 effective date of the Wage Rule and ordered us to announce a new effective date for the rule within 45 days from June 16. The basis for the court's ruling was twofold: (1) That the almost one-year delay in the effective date was not a ''logical outgrowth'' of the proposed rule, and therefore violated the APA; and (2) that the Department violated the INA in considering hardship to employers when deciding to delay the effective date. The court held that ''it is apparent that in this case the notice of proposed rulemaking was deficient.'' *CATA* v. *Solis,* Dkt. No. 119, 2011 WL 2414555 at *4. The court noted that the NPRM said nothing about a delayed effective date, and accordingly ''the public would * * * be justified in assuming that any delay in the effective date would mirror the minimal delays associated with the issuance of similar wage regulations over the past several decades.'' *Id.* In finding a violation of the INA, the court relied extensively on the 1983 district court decision in *NAACP* v. *Donovan,* 566 F. Supp. 1202 (D.D.C. 1983), which held that the Department could not phase in a wage regime based upon a desire to alleviate hardship on small businesses, because '' '[in] administering the labor certification program, DOL is charged with protection of workers.' '' *CATA* v. *Solis,* Dkt. No. 119, 2011 WL 2414555 at *4 (citing *NAACP* v. *Donovan,* 566 F. Supp. at 1206).

In response to the court's order, we issued a Notice of Proposed Rulemaking (NPRM) on June 28, 2011, which proposed that the Wage Rule take effect 60 days from the date of publication of a final rule resulting from this rulemaking. Because we anticipated the date of publication of the final rule to be on or about August 1, 2011, we said in the NPRM that the effective date of the Wage Rule would be on or about October 1, 2011. The Wage Rule would be effective for wages paid to H–2B workers and U.S. workers recruited in connection with an H–2B labor certification for all work performed on or after the new effective date.

II. Discussion of Comments

A. Overview of Comments Received

We received 59 comments in response to the NPRM. Forty-two of the comments were completely unique, one was a duplicate, and the remainder were a form letter or based on a form letter. Commenters represented individual employers, worker advocacy groups, business associations, agents, the Chief Counsel for the Office of Advocacy of the Small Business Administration (Chief Counsel for Advocacy, SBA), Members of Congress, and various interested members of the public. The comments are discussed in greater detail below.

Some of the comments were outside the scope of the proposed rule. The NPRM proposed a new effective date for the Wage Rule and specifically provided that any comments relating to the merits of the Wage Rule would be deemed out

[1] On August 30, 2010, the U.S. District Court for the Eastern District of Pennsylvania in *CATA v. Solis,* 2010 WL 3431761 (E.D. Pa.) ruled that the Department had violated the Administrative Procedure Act by failing to adequately explain its reasoning for using skill levels as part of the H–2B prevailing wage determinations, and failing to consider comments relating to the choice of appropriate data sets in deciding to rely on OES data rather than SCA and DBA in setting the prevailing wage rates. The court ordered the Department to ''promulgate new rules concerning the calculation of the prevailing wage rate in the H–2B program that are in compliance with the Administrative Procedure Act no later than 120 days from the date of this order.'' The order was later amended to provide additional time, until January 18, 2011, to promulgate a final rule.

of scope and would not be considered. Furthermore, the NPRM stated that under the court's order, we cannot consider specific examples of employer hardship to delay the effective date of a new wage rule. See *CATA* v. *Solis,* Dkt. No. 119, 2011 WL 2414555 at *4. Many comments went well beyond the scope of amending the effective date of the Wage Rule. Among the comments that we deemed out of scope were comments that challenged the merits of the Wage Rule and asserted that the Wage Rule and/or the proposed effective date of the Wage Rule would result in employer hardship, including inadequate time to plan or prepare for the change in wages, cancellation of contracts, lower profits, and financial insolvency. Because the district court was clear that our consideration of hardship to employers when setting the January 1, 2012 effective date was contrary to our responsibilities under the INA to protect the wages and working conditions of U.S. workers, we cannot consider these comments in this rulemaking. We also did not consider comments submitted before the comment period began or after the comment period closed.

B. Adequacy of Comment Period

Several commenters did not believe that the ten day comment period provided an adequate amount of time for the public to comment on the NPRM, and several specifically requested extending the deadline for submission of comments, including up to 120 days. An agency is only required to provide a ''meaningful opportunity'' for comments on a proposed rule. *See Grand Canyon Air Tour Coalition* v. *FAA,* 154 F.3d 455 (D.C. Cir. 1998). In *Florida Power & Light Company* v. *NRC,* 846 F.2d 765 (D.C. Cir 1988), the court used a reasonableness standard to uphold the agency's 15 day comment period. Although the agency in that case was attempting to meet a Congressional deadline, we are under an analogous constraint here given the judicial requirement of the *CATA* order that a new effective date be announced within 45 days. As was true in *Florida Power,* despite the truncated comment period, we received more than 40 substantive comments addressing every aspect of the issue. We issued an NPRM that simply proposed to move up the effective date of the Wage Rule by 3 months. Ten days is ample time for a member of the public to review the NPRM, which only consisted of 4 pages in the **Federal Register,** and formulate a meaningful response. The shorter timeframe is warranted here, given the limited scope of this rulemaking and the court's June 16, 2011 order that we announce a new effective date within 45 days. Because we had to draft an NPRM, review comments, draft a final rule and submit both the NPRM and the Final Rule for Executive Order 12866 review within the 45-day period ordered by the court, the ten-day comment period is the most generous period that we could provide.

C. Authority of CATA Decision

An employer expressed its disagreement with the June 16, 2011 *CATA* decision, stating that the Department's consideration of employer hardship was appropriate and that the court misunderstood the procedural requirements of the H–2B program. An employer association chided the Department for its ''wholesale endorsement of the decision,'' arguing that the court's holding that the Department is not permitted to consider employer hardship was ''meaningless dicta,'' that the *CATA* case was not a legitimate case or controversy but more akin to an ''advisory opinion'' because both the plaintiffs' and our interests were aligned, and that the INA does not make any reference good or bad to employer hardship. While we understand that there may not be agreement with the merits of the June 16, 2011 *CATA* decision, it is binding on the Department and we must act in accordance with it. As to the commenter's claim that the plaintiffs' and our interests are aligned in the *CATA* litigation, we have vigorously defended our positions at all stages of the *CATA* case, including opposing the plaintiffs' January 24, 2011 motion. *See CATA* v. *Solis,* Dkt. No.105, Defendants' Opposition to Plaintiffs' Motion for Order Enforcing the Judgment.

D. Harm to H–2B and U.S. Workers

Two employer associations asserted that employers and workers stand and fall together—specifically, that there is no distinction between the benefit of employers and the benefit of workers and that a negative impact on the employer has an immediate negative effect on the workers. In an effort to illustrate that point, a number of employers and employer associations stated that the accelerated effective date would result in having to lay off their H–2B workers because they simply would not be able to afford the increase in wages based on the Wage Rule's new wage methodology. Additionally, some employers commented that as a result of their H–2B worker layoffs, they would be forced to lay off their U.S. workers who are in supervisory, support, and administrative positions.

Our responsibilities in the H–2B labor certification program first and foremost are to ensure that U.S. workers are given priority for temporary non-agricultural job opportunities and to protect U.S. workers' wages and working conditions from being adversely affected by the employment of foreign workers in such job opportunities. *See* 8 U.S.C. 1101(a)(15)(H)(ii)(b). Only when we certify that U.S. workers capable of performing the services or labor are not available and that the employment of the foreign worker(s) will not adversely affect the wages and working conditions of similarly employed U.S. workers (*see* 8 CFR 214.2(h)(6)) may an employer file an H–2B visa petition to bring in temporary foreign workers. The court was quite clear that ''[d]elaying the implementation of the Wage Rule requires, by necessity, the continued payment of a lower, invalid wage to H–2B workers.'' *CATA* v. *Solis,* Dkt. No. 119, 2011 WL 2414555 at *4. The payment of this lower, invalid wage clearly has an adverse effect on the wages of similarly employed U.S. workers.

We do not dispute that the implementation of the Wage Rule, whether on the amended or original timeframe, regrettably may result in the layoffs of H–2B workers and possibly U.S. workers in positions that support those that are currently filled by H–2B workers. However, our role in the H–2B program, as further reinforced by the district court in *CATA,* is to protect the wages and working conditions of similarly employed U.S. workers—a constituency that few, if any, of the commenters acknowledge—but who are the very group the labor certification program was designed to protect.

E. Earlier Effective Date

Two worker advocacy organizations and a labor organization supported putting the Wage Rule into effect as quickly as possible. A worker advocacy organization specifically requested ''the earliest administratively practical effective date'' for the Wage Rule and that the effective date be no later than 30 days after the publication of the final rule resulting from this rulemaking—i.e., August 31, 2011. The commenter stated that it disagreed with our suggestion in the NPRM that the fact that the Congressional Review Act (CRA) applied to the Wage Rule provided any basis for delaying the Wage Rule another 60 days from the date of publication of the final rule resulting from this rulemaking. The commenter believes that we have the authority under the APA to set an immediate effective date for the Wage

Rule upon publication of the final rule resulting from this rulemaking. The commenter contends that we would have good cause for doing so, as more than six months have passed without any action from Congress to vacate the Wage Rule under the CRA, while ''H–2B workers continue to be paid unlawfully low wages.'' While the commenter agreed that the Department's ''administrative needs in implementation of [the Wage Rule] is an appropriate factor to consider in establishing the effective date,'' the commenter believes that:

> It would be administratively practicable for DOL to immediately issue bulk interim prevailing wage determinations by electronic mail notifying all applicants for H–2B prevailing wage determinations submitted since October 1, 2010 that if they employed any H–2B workers after August 1, 2011, they would be immediately required to pay the FLC Data Center Level 3 wage based on 2011 OES data for the SOC (ONET/OES) code on their initial prevailing wage determination for their geographic area until such time as DOL determined if there were higher Service Contract Act (SCA) or Davis Bacon Act (DBA) wage rates for their H–2B workers and other workers in corresponding employment. Employers could be directed to *http://www.flcdatacenter.com/OESWizardStart.aspx,* the Online Wage Library—FLC Wage Search Wizard, to mathematically calculate the appropriate prevailing wage rate pending an individualized further notice from DOL. Employers for whom SCA or DBA wages might be appropriate could be notified of procedures for submitting further information for determining those wage rates.

The same commenter also stated that if we have an internal computerized system for tracking H–2B certification applications and decisions, identifying employers with certifications for periods of employment on or after August 1, 2011 should be relatively straightforward. Additionally, the commenter raised the possibility of whether the existing computerized data for the H–2B prevailing wage determinations could be used to automatically recompute new prevailing wage rates at the July 2011 OES Level 3 wage rates, which would relieve employers from having to re-calculate the new wage rates themselves. Lastly, the commenter stated that if we already have a cross reference by SOC (ONET/OES) codes for employment involving potential DBA or SCA wage rates, ''that possibility could be specifically flagged only for those codes and a questionnaire seeking additional information in relationship thereto could be generated.''

We still consider the proposed 60 day delayed effective date to be necessary and appropriate, despite the commenter's proposal of various operational measures to implement the Wage Rule in a more expeditious manner. We do not dispute that the 60 day delayed effective date requirement of the CRA applied only to the publication of the Wage Rule in January 2011 and that we are not legally required under the CRA to delay by 60 days from the publication of this rulemaking the effective date of the rule. However, while we agree with the commenter that the Wage Rule should have the ''earliest possible administratively practical effective date,'' an effective date of 30 days after the publication of the final rule does not provide us with sufficient operational time to issue new prevailing wage determinations (PWDs) under the methodology prescribed by the Wage Rule.

Because the new wage methodology under the Wage Rule would take effect for all wages paid to H–2B workers and U.S. workers recruited in connection with an H–2B labor certification for all work performed on or after the new effective date, we will have to issue PWDs using the Wage Rule methodology not only for all applications received after the new effective date but also for existing certifications for which work is to be performed on or after the new effective date. What this means is that our National Prevailing Wage Center (NPWC) will have to issue approximately 4,000 supplemental prevailing wage determinations.[2] This is a manual process, as there is no way to automatically link the PWD requests that were submitted and processed in the iCert prevailing wage system with the actual H–2B applications that were subsequently filed and approved for work that will be performed on or after the effective date. Many of these requests involve multiple locations, some including dozens of locations, each of which requires a separate determination.[3] While the NPWC anticipates being able to issue all of these 4,000 supplemental wage determinations before October 1, to do so before August 31 is physically and operationally impossible.

We appreciate the commenter's suggestions for streamlining the PWD process in order to implement the new Wage Rule in the most expeditious manner possible. However, it is imperative that we issue individual PWDs for each employer that has an H–2B labor certification for work being performed on or after the new effective date to ensure the integrity and enforceability of the new prevailing wage. The commenter's suggestion that employers calculate their own prevailing wage would present us with substantial challenges in both implementation and enforcement. NPWC staff provide a level of consistency and accuracy that would not be replicable if responsibility for PWDs were devolved to hundreds, if not thousands, of individual H–2B employers and their various representatives. In the simplest scenario proposed by the commenter, an employer with limited or no previous knowledge of the prevailing wage determination process would have to follow our instructions to use an unfamiliar set of online tools to determine their correct prevailing wage. In addition to possible errors caused by lack of familiarity with the system, further complications could arise for employers with certified occupations that are a blend of two unique occupations or with multiple areas of intended employment. There is potential for employer error at every step that could result in the unintentional payment of an incorrect wage rate to thousands of H–2B workers. Moreover, our ability to enforce an employer's failure to pay the correct wage would be compromised if we could not definitively show that the employer knew what the proper wage was (*see* 20 CFR 655.65(e)), which would be quite difficult, given the practical challenges just discussed.

Moreover, obtaining the appropriate SCA and DBA wages for the job opportunity is not as simple a process as obtaining the OES wage, since the SCA and DBA wages are determined in a completely different manner and updated on a completely separate timeframe. We make SCA and DBA wage rates available to Federal contracting officers and the public through the *http://www.wdol.gov* Web site. While it is easy to use this Web site to locate wage determinations, selecting the appropriate occupations or job classification from the wage determination presents additional opportunities for employer error. Occupations under the SCA are determined using the Dictionary of Occupational Titles (DOT). Employers would be required to review the

[2] It has not been possible to perform recalculations of the prevailing wage before July 1, as the wages in OES are updated on or about that date each year, and were not available before that date for use in the H–2B program.

[3] Until we have reviewed all affected applications some of which are still in the process of adjudication we will not know the exact number of determinations that that the NPWC must issue.

definitions in the DOT and determine the appropriate SCA occupation for their specific job opportunity. For example, an employer seeking to hire H–2B workers for its restaurant could be presented with SCA wage rates for a ''Cook I,'' ''Cook II,'' and ''Food Service Worker'' on the same wage determination. The employer would be required to analyze the DOT to determine the appropriate occupation.

A similar challenge exists with DBA wage rates. DBA wage rates reflect the area practice concept which makes it difficult for someone inexperienced with those wage rates to determine which rate applies. For example, in some areas of the country, a rate is established for ''welders,'' and in other areas welders receive the rate prescribed for the craft to which performance of the welding is an incidental operation, depending on whether it is the practice in the area to treat welding as a separate occupation. Therefore, we do not believe that employers could easily select the correct prevailing wage rate for the job opportunity without this specialized knowledge. The commenter implicitly acknowledges this complexity, as it offers no proposal for obtaining those wages in an expedited manner; instead, it proposes that employers be required to immediately begin paying the OES Level 3 wage and that the NPWC would determine the applicability of the SCA or DBA wage at a later date. This would serve further to undermine our ability to enforce the payment of the prevailing wage as of the new effective date if either the SCA or DBA wage eventually were found to be the highest wage (*see* 76 FR 3484 (Jan. 19, 2011) (to be codified at 20 CFR 655.10(b)(2)), because the employer may not have been aware at the time that the work was performed after the new effective date that either the SCA or DBA wage was the prevailing wage.

We do not think it appropriate to issue ''interim'' wage determinations and then issue corrected wage determinations at a later date, possibly requiring employers to pay make-up pay at a later date, or for workers to have their pay adjusted downward. Sound program administration and basic fairness require us to provide employers with a prevailing wage determination on which they can rely in time for them to make any needed adjustments in their payroll systems and pay the correct new wages when they are due. Issuing prevailing wage determinations as quickly as possible but in time for employers to implement them on the effective date avoids confusion for both employers and workers, and also reduces the necessity of enforcement actions and the possibility of litigation.

F. Later Effective Date

Two employer associations asserted that the court in *CATA* did not mandate an earlier effective date but merely required that the effective date be subject to notice and comment. One employer suggested that any new wage changes apply to H–2B visas released after the new effective date. We do not believe, based on the *CATA* decision and on our mandate to ensure that the employment of foreign workers in temporary non-agricultural positions does not adversely affect similarly employed U.S. workers, that we can further delay implementing the Wage Rule beyond the time that it takes to issue and implement the new prevailing wage determinations, as described above. While the court did not order us to issue any particular effective date, its decision made it clear that the court was concerned with the ''critical importance of avoiding the depression of wages paid to U.S. and to H–2B workers, and * * * the already protracted delay in implementing a valid prevailing wage regime.'' *CATA* v. *Solis,* Dkt. No. 119, 2011 WL 2414555 at *5. Applying the Wage Rule's prevailing wage methodology only to H–2B visas issued after the new effective date would result in what the court in *CATA* specifically sought to avoid—prolonging the payment of a lower, invalidated wage to H–2B workers. We believe that, under the court's decision, we must do all we can that is administratively and operationally feasible to minimize the period in which these payments continue.

G. Impact of Changing the Prevailing Wage for Existing Certifications

Several commenters objected to the application of the Wage Rule's prevailing wage methodology to existing certifications. An employer association asserted that we would be acting in conflict with our regulations providing that the prevailing wage would be valid throughout the intended of period employment. Similarly, another employer association claimed that allowing the new prevailing wage methodology to apply to existing certifications would violate the attestation on older versions of the ETA Form 9142, Appendix B.1 that ''the offered wage equals or exceeds the highest of the prevailing wage, the applicable, Federal, State, or local minimum wage, and the employer will pay the offered wage during the entire period of the approved labor certification.''

In the fall of 2010, the *CATA* plaintiffs moved for additional relief including seeking an order requiring the Department to condition future H–2B certifications on employer agreement to pay the wage rate under the Wage Rule once it became effective. We opposed this order, arguing that the regulation at 20 CFR 655.10(d) meant that once an employer had received a prevailing wage determination in any year, it is entitled to use that prevailing wage throughout the duration of its H–2B certification. In a November 24, 2010 ruling, the court rejected that argument:

> Nothing in § 655.10(d), nor any related regulation, prevents the DOL from devising interim measures to reduce the impact of the deficient methodology. Thus an employer must pay a valid wage for the duration of employment, but it does not follow that an employer must continue paying that wage after it has been deemed to be the product of an invalid regulation.

CATA v. *Solis,* Dkt. No. 97, 2010 WL 4823236 at *2 (footnote omitted). Although the court did not order us to take any specific action, we reconsidered our position in light of the court's ruling that the current wage methodology is invalid and that we have the authority to require employers to pay wages other than those issued in a prevailing wage determination. Accordingly, in these special circumstances, we decided that it is not appropriate to allow wage determinations made under the invalidated current methodology to continue to govern the payment of wages beyond the effective date of the Wage Rule.

While these commenters may not agree with the district court's rationale, as discussed above, the decision is nevertheless binding. As to the commenter's concern that an employer would be in violation of the attestation on the previous version of the ETA Form 9142, Appendix B.1, we do not consider the attestation to be inconsistent with an employer's payment of a higher wage rate once the Wage Rule takes effect. The attestation only requires that the offered wage equal or exceed the highest of the prevailing wage or applicable minimum wage and that the employer pay the offered wage during the time period the work is performed. If the prevailing wage increases as a result of the Wage Rule taking effect, then the employer's offered wage would need to increase in accordance with that change.

Additionally, a commenter stated that because employers have a protected property interest in the validity of the prevailing wage throughout the period of intended employment, we would be

denying the employer due process to take away that right without notice and an opportunity for an individual hearing. The commenter's concerns about due process are not warranted. As a threshold matter, due process applies only to individualized determinations, and not to legislative rulemaking. *See United States* v. *Florida East Coast Railway,* 410 U.S. 224, 244–46 (1973). We are not required to provide a hearing before taking an action that affects the property interest of a class of individuals or regulated entities. *See McMurtray* v. *Holladay,* 11 F.3d 499, 504 (5th Cir. 1993). In any event, when employers operating under current certifications are notified of the new prevailing wage, the notice will provide them with appropriate appeal rights under section 655.11, so that they can challenge the correctness of their individualized prevailing wage determination.

Another employer association claimed that because an employer would have advertised and tested the labor market at a wage rate that is different than the new prevailing wage under the Wage Rule, the employer could be accused of applying a wage that is higher than the wage that was advertised to domestic workers, which could result in a revocation of the employers' petition by DHS. The commenter relies on what it deems to be the Department of State's interpretation that an employer may not pay above the prevailing wage that was advertised at the time the H–2B job was advertised per regulation. Along the same lines, one commenter called for the Department to provide extra time to re-apply to USCIS for continued certification under the new prevailing wage, and another commenter stated that any new changes to the wage rates must not require employers to complete the recruitment phase or obtain a new foreign labor certification once these steps have already been completed.

The Department of State and USCIS, each of which play a role in the H–2B process, are aware of the unique circumstances of this supplemental wage determination process as outlined in the Wage Rule and in this Final Rule. We contacted each agency about this issue. The Department of State advised us that it might not issue a visa in some circumstances where the visa has not yet been issued but the wage will be higher than stated on the petition. However, because this is a regulatory change mandated by an agency with the authority to do so—namely, the Department—this is not in itself a basis for petition revocation. USCIS advised that, while circumstances vary, they generally cannot deny or revoke a nonimmigrant visa petition for this reason. We will continue to advise both the Department of State and USCIS as the supplemental wage determinations are issued.

III. Administrative Information

A. Executive Orders 12866 and 13563

Under Executive Order (E.O.) 12866 and E.O. 13563, we must determine whether a regulatory action is significant and therefore, subject to the requirements of the E.O.s and subject to review by the Office of Management and Budget (OMB). Section 3(f) of E.O. 12866 defines a ''significant regulatory action'' as an action that is likely to result in a rule that: (1) Has an annual effect on the economy of $100 million or more or adversely and materially affects a sector of the economy, productivity, competition, jobs, the environment, public health or safety, or State, local or Tribal governments or communities (also referred to as ''economically significant''); (2) creates serious inconsistency or otherwise interferes with an action taken or planned by another agency; (3) materially alters the budgetary impacts of entitlement grants, user fees, or loan programs or the rights and obligations of recipients thereof; or (4) raises novel legal or policy issues arising out of legal mandates, the President's priorities, or the principles set forth in the E.O. Executive Orders 13563 and 12866 direct agencies to assess all costs and benefits of available regulatory alternatives and, if regulation is necessary, to select regulatory approaches that maximize net benefits (including potential economic, environmental, public health and safety effects, distributive impacts, and equity). Executive Order 13563 emphasizes the importance of quantifying both costs and benefits, of reducing costs, of harmonizing rules, and of promoting flexibility.

We have determined that this Final Rule is not an economically significant regulatory action under sec. 3(f)(1) of E.O. 12866. We have, however, determined that this Final Rule is a significant regulatory action under sec. 3(f)(4) of the E.O. and, accordingly, OMB has reviewed this Final Rule.

B. Regulatory Flexibility Act

The Regulatory Flexibility Act (RFA) at 5 U.S.C. 603 requires agencies to prepare a regulatory flexibility analysis to determine whether a regulation will have a significant economic impact on a substantial number of small entities. Section 605 of the RFA allows an agency to certify a rule in lieu of preparing an analysis if the regulation is not expected to have a significant economic impact on a substantial number of small entities. Further, under the Small Business Regulatory Enforcement Fairness Act of 1996, 5 U.S.C. 801 (SBREFA), an agency is required to produce a compliance guidance for small entities if the rule has a significant economic impact. The Assistant Secretary of ETA has notified the Chief Counsel for Advocacy, Small Business Administration (SBA), under the RFA at 5 U.S.C. 605(b), and certified that this rule will not have a significant economic impact on a substantial number of small entities.

We received a comment from the Chief Counsel for Advocacy, SBA, in which the Chief Counsel contended that we did not adequately provide a factual basis for the RFA certification and that the certification did not take into consideration the economic impact that this unexpected change in the effective date of the Wage Rule will have on small businesses. The Chief Counsel for Advocacy, SBA strongly encouraged us to complete an Interim Regulatory Flexibility Analysis of the NPRM. Several associations also asserted that we failed to consider the impact of this rulemaking on small businesses.

In particular, the Chief Counsel for Advocacy, SBA, claimed that we offered no data or other analysis in support of the factual basis used to support the certification as required by the RFA beyond the statement ''[w]hile the change in the effective date of the Wage Rule that is being proposed in this NPRM may change the period in which the total cost burdens for small entities would occur, the Department believes that the amount of the total cost burdens themselves would not change.'' [4] An employer association stated that if the effective date moves to October 1, 2011, its average member's payroll would increase from $79,840 to $159,680 and that their ''total cost of labor'' would likely double or even triple these figures. Another employer association argued that if the period that the Wage Rule is in effect is increasing, the total cost burden would increase along with the extended period, as the difference in implementing the Wage Rule on October 1, 2011 as opposed to January 1, 2012 would be $1,872 per worker.

We disagree with the Chief Counsel for Advocacy, SBA's assessment that we did not provide a factual basis for the certification. As we stated in the NPRM, we already established in the Wage Rule that we believed that the Wage Rule was

[4] 76 FR 37686, 37688–89 (June 28, 2011).

not likely to impact a substantial number of small entities, and we provided an extensive analysis in the Wage Rule to support this conclusion. See 76 FR 3452, 3473–3482 (Jan. 19, 2011). Changing the effective date of the Wage Rule does not change the total cost burden for small entities as calculated under the Wage Rule. The total cost burden for small entities under the Wage Rule accounted for the increase in wage costs as a result of the new wage methodology (e.g., a $4.83 increase in the weighted average hourly wage for H–2B workers (and similarly employed U.S. workers hired in response to the recruitment required as part of the H–2B application)) [5] and the cost of reading and reviewing the Wage Rule—neither of which accounted for or were impacted by the original January 1, 2012 effective date of the Wage Rule. While we found that the Wage Rule has a significant economic impact [6] (contrary to a commenter's assertion that we did not make such a finding), we found that the Wage Rule did not impact a substantial number of small entities, as the small entities that have historically applied for H–2B workers represent relatively small proportions of all small businesses—i.e., less than 10% of the relevant universe of small entities in a given industry.[7] The H–2B employers that the commenters cite are already captured by these numbers, as the determination of the number of small entities affected by the Wage Rule neither accounted for, nor was affected by, the original January 1, 2012 effective date of the Wage Rule. We do not dispute that as a result of the Wage Rule, employers may in the short term experience an increase in costs, but the increase in total costs of the H–2B program as a result of the Wage Rule during the first year of its implementation and annually thereafter would be the same, regardless of whether it goes into effect October 1, 2011 or January 1, 2012. Therefore, the RFA analysis in the Wage Rule continues to be an accurate analysis of the impact of the Wage Rule on small businesses and would remain unaffected by the change in the effective date of the Wage Rule.

The Chief Counsel, Office of Advocacy, SBA, also stated that ''[t]here is nothing cited in the Proposed Rule that negates the agency's previous concern noted in the Wage Rule about the impact of the wage modification on small businesses, other than a court order mandating a new effective date,'' a sentiment that was echoed by a number of associations. However, the Chief Counsel is mistaken, as the NPRM clearly states that the need for the rulemaking arose from the *CATA* litigation under which the court specifically found that we violated the INA in considering hardship to employers (regardless of size) when deciding to delay the effective date. We do not dispute the Chief Counsel's observations that ''[s]mall businesses have made plans, commitments, and have expended money for the current year based on the January 1, 2012, effective date announced in the Wage Rule nearly six months ago'' but, as we discussed in the Wage Rule's RFA analysis, the rule does not impact a significant number of small businesses. Moreover, the court in *CATA* has explicitly prohibited us from considering these employer hardships when setting the effective date of the Wage Rule. Additionally, as we have explained above, we continue to rely on the total cost burden provided in the Wage Rule's RFA analysis, as it is not impacted by the change in the effective date of the Wage Rule.

C. Unfunded Mandates Reform Act of 1995

Title II of the Unfunded Mandates Reform Act of 1995 (2 U.S.C. 1531) directs agencies to assess the effects of Federal regulatory actions on State, local, and tribal governments, and the private sector. The Final Rule has no Federal mandate, which is defined in 2 U.S.C. 658(6) to include either a ''Federal intergovernmental mandate'' or a ''Federal private sector mandate.'' A Federal mandate is any provision in a regulation that imposes an enforceable duty upon State, local, or tribal governments, or imposes a duty upon the private sector which is not voluntary.

D. Small Business Regulatory Enforcement Fairness Act of 1996

We have determined that this rulemaking does not impose a significant impact on a substantial number of small entities under the RFA; therefore, we are not required to produce any compliance guides for small entities as mandated by the SBREFA. We have similarly concluded that this Final Rule is not a major rule requiring review by the Congress under the SBREFA because it will not likely result in: (1) An annual effect on the economy of $100 million or more; (2) a major increase in costs or prices for consumers, individual industries, Federal, State or local government agencies, or geographic regions; or (3) significant adverse effects on competition, employment, investment, productivity, innovation, or on the ability of U.S.-based enterprises to compete with foreign-based enterprises in domestic or export markets. We received two comments that suggested that the earlier effective date of the Wage Rule would exacerbate the already negative impact that higher wages resulting from the Wage Rule would have on competition, employment, and investment and, in particular, the crab meat processing industry, as cheaper foreign crabmeat will completely displace domestically produced crabmeat in local markets. Another employer echoed this concern for the manufacturing industry in general, stating that the change in effective date would result in job losses either because the company fails or moves its operations outside the U.S.

The only data offered by one of the commenters in support of these statements is an undated study on Maryland's crabmeat processing industry.[8] This study not only appears to challenge the underlying merits of the Wage Rule, which would make it out of scope for purposes of this rulemaking, but also is premised on the assumption that absolutely no U.S. workers would be willing to work in any positions formerly held by H–2B workers, thereby resulting in major job losses in Maryland's crabmeat processing industry and in the loss of related jobs affected by the crabmeat processing industry. Given that the increase in wages not only would ensure against adverse effect but may also have the effect of causing U.S. workers to become more interested in these jobs, the study's assumption that no U.S. workers would ever replace the H–2B workers is fundamentally flawed. Therefore, neither of these commenters makes a sufficient case that changing the effective date of the Wage Rule would result in significant adverse effects on competition, employment, investment, productivity, innovation, or on the ability of U.S.-based enterprises to compete with foreign-based enterprises in domestic or export markets.

E. Executive Order 13132—Federalism

We have reviewed this Final Rule in accordance with E.O. 13132 on federalism and have determined that it does not have federalism implications. The Final Rule does not have substantial direct effects on States, on the relationship between the States, or on the distribution of power and

[5] 76 FR 3452, 3475 (Jan. 19, 2011).

[6] See *id.* at 3476.

[7] *Id.*

[8] Lipton, Douglas D. Analysis of Economic Impact of H–2B Worker Program on Maryland's Economy.

responsibilities among the various levels of government as described by E.O. 13132. Therefore, we have determined that this Final Rule will not have a sufficient federalism implication to warrant the preparation of a summary impact statement.

F. Executive Order 13175—Indian Tribal Governments

We reviewed this Final Rule under the terms of E.O. 13175 and determined it not to have tribal implications. The Final Rule does not have substantial direct effects on one or more Indian tribes, on the relationship between the Federal Government and Indian tribes, or on the distribution of power and responsibilities between the Federal Government and Indian tribes. As a result, no tribal summary impact statement has been prepared.

G. Assessment of Federal Regulations and Policies on Families

Section 654 of the Treasury and General Government Appropriations Act, enacted as part of the Omnibus Consolidated and Emergency Supplemental Appropriations Act of 1999 (Pub. L. 105–277, 112 Stat. 2681) requires us to assess the impact of this Final Rule on family well-being. A rule that is determined to have a negative effect on families must be supported with an adequate rationale. We have assessed this Final Rule and determined that it will not have a negative effect on families.

H. Executive Order 12630—Government Actions and Interference With Constitutionally Protected Property Rights

The Final Rule is not subject to E.O. 12630, Governmental Actions and Interference with Constitutionally Protected Property Rights, because it does not involve implementation of a policy with takings implications.

I. Executive Order 12988—Civil Justice

The Final Rule has been drafted and reviewed in accordance with E.O. 12988, Civil Justice Reform, and will not unduly burden the Federal court system. The Department has developed the Final Rule to minimize litigation and provide a clear legal standard for affected conduct, and has reviewed the Final Rule carefully to eliminate drafting errors and ambiguities.

J. Plain Language

We drafted this Final Rule in plain language.

K. Paperwork Reduction Act

As part of our continuing effort to reduce paperwork and respondent burden, we conduct a preclearance consultation program to provide the general public and Federal agencies with an opportunity to comment on proposed and continuing collections of information in accordance with the Paperwork Reduction Act of 1995 (PRA) (44 U.S.C. 3506(c)(2)(A)). This process helps to ensure that the public understands the collection instructions; that respondents provide requested data in the desired format; that reporting burden (time and financial resources) is minimized; that collection instruments are clearly understood; and that we properly assess the impact of collection requirements on respondents.

The PRA requires all Federal agencies to analyze proposed regulations for potential time burdens on the regulated community created by provisions within the proposed regulations that require the submission of information. These information collection (IC) requirements must be submitted to the OMB for approval. Persons are not required to respond to a collection of information unless it displays a currently valid OMB control number as required in 5 CFR 1320.11(l) or it is exempt from the PRA.

The majority of the IC requirements for the current H–2B program are approved under OMB control number 1205–0466 (which includes ETA Form 9141 and ETA Form 9142). There are no burden adjustments that need to be made to the analysis. For an additional explanation of how we calculated the burden hours and related costs, the PRA package for information collection OMB control number 1205–0466 may be obtained at *http://www.RegInfo.gov.*

IV. Change of Effective Date of Wage Rule

In the final rule published January 19, 2011, 76 FR 3452, under the **DATES** section, the effective date of the final rule is amended to read as follows:

This final rule is effective September 30, 2011.

Signed in Washington, this 26th day of July 2011.

Jane Oates,

Assistant Secretary, Employment and Training Administration.

[FR Doc. 2011–19319 Filed 7–29–11; 8:45 am]

BILLING CODE 4510–FP–P

DEPARTMENT OF THE TREASURY

Internal Revenue Service

26 CFR Part 1

[TD 9534]

RIN 1545–BD81

Methods of Accounting Used by Corporations That Acquire the Assets of Other Corporations

AGENCY: Internal Revenue Service (IRS), Treasury.

ACTION: Final regulations.

SUMMARY: This document contains final regulations relating to the methods of accounting, including the inventory methods, to be used by corporations that acquire the assets of other corporations in certain corporate reorganizations and tax-free liquidations. These regulations clarify and simplify the rules regarding the accounting methods to be used following these reorganizations and liquidations.

DATES: *Effective date:* These regulations are effective on August 31, 2011.

Applicability date: For dates of applicability, see §§ 1.381(a)–1(e), 1.381(c)(4)–1(f), 1.381(c)(5)–1(f), and 1.446–1(e)(4)(iii).

FOR FURTHER INFORMATION CONTACT: Cheryl Oseekey at (202) 622–4970 (not a toll-free number).

SUPPLEMENTARY INFORMATION:

Background

This document contains amendments to 26 CFR part 1. On November 16, 2007, the IRS and the Treasury Department published a notice of proposed rulemaking (REG–151884–03) in the **Federal Register** (72 FR 64545). This notice of proposed rulemaking, while continuing most of the provisions of the regulations originally issued under sections 381(c)(4) and 381(c)(5) of the Internal Revenue Code (Code) regarding the methods of accounting to be used by a corporation that acquires the assets of another corporation in a section 381(a) transaction, proposed to clarify and simplify those existing regulations. The IRS received no comments in response to the notice of proposed rulemaking. No public hearing was requested or held. The proposed regulations, as revised by this Treasury decision, are adopted as final regulations.

Explanation of Provisions

The final regulations differ somewhat in organization and format from the notice of proposed rulemaking. These changes are intended to be editorial in

nature and are not intended to alter the substance and principles of the rules set forth in the notice of proposed rulemaking. The IRS and the Treasury Department made these changes to further advance the objective, as expressed in the preamble to the notice of proposed rulemaking, of reducing uncertainty and controversy by providing regulations under sections 381(c)(4) and 381(c)(5) that are clear, consistent, and administrable. For example, the final regulations under sections 381(c)(4) and 381(c)(5) have been drafted so that the regulations mirror each other to the greatest extent possible, thus highlighting the consistencies of the regulations' provisions. Similarly, many of the examples in the notice of proposed rulemaking have been revised in the final regulations to specify the substantive tax rule in the regulations that the examples illustrate. Additionally, new examples were added to the final regulations to provide further illustrations of the substantive tax rules in these regulations.

The keystone of the final regulations for sections 381(c)(4) and 381(c)(5) continues to be whether the acquiring corporation operates the trades or businesses of the parties to a section 381(a) transaction as separate and distinct trades or businesses following the date of distribution or transfer. The final regulations continue to provide that when the acquiring corporation operates the trades or businesses of the parties as separate and distinct trades or businesses after the date of distribution or transfer, the acquiring corporation will use a carryover method. In contrast, when the acquiring corporation does not operate the trades or businesses of the parties as separate and distinct trades or businesses after the date of distribution or transfer, the acquiring corporation will use a principal method. These rules do not apply when a carryover method or principal method, as applicable, is not a permissible method, or when the acquiring corporation chooses not to use a carryover method or principal method. In those cases, the general rules under section 446(e) that govern methods of accounting apply.

The final regulations modify the test for determining a principal method when the acquiring corporation does not operate the trades or businesses of the parties to the section 381(a) transaction as separate and distinct trades or businesses after the date of distribution or transfer. Under the final regulations, the determination of whether the distributor or transferor corporation is larger than the acquiring corporation is made by comparing certain attributes (that is, under section 381(c)(4) the adjusted bases of the assets and gross receipts, and under section 381(c)(5) the fair market value of the inventory) of only the trades or businesses that will be integrated after the date of distribution or transfer rather than comparing the attributes for the entire entity. The IRS and the Treasury Department believe that the attributes of a trade or business that will continue to operate as a separate and distinct trade or business after the date of distribution or transfer should not influence the determination of a principal method that will be used by trades or businesses that will be integrated after the date of distribution or transfer. The IRS and the Treasury Department also believe that applying the test at the trade or business level is consistent with § 1.446–1(d) because methods of accounting are generally determined at the trade or business level.

The final regulations also provide rules on how an acquiring corporation identifies a principal method when an acquiring corporation or a distributor or transferor corporation operates more than one separate and distinct trade or business on the date of distribution or transfer, has more than one method of accounting used in the trades or businesses, and the acquiring corporation combines the trades or businesses after the date of distribution or transfer. While the IRS and the Treasury Department do not think these situations occur frequently, the final regulations are revised to provide certainty for an acquiring corporation and to obviate the need to obtain a ruling in these situations.

The final regulations under sections 381(c)(4) and 381(c)(5) clarify the definition of ''cut-off basis.'' The final regulations provide that *cut-off basis* generally means a manner in which a change in method of accounting is made without a section 481(a) adjustment and under which only the items arising after the beginning of the year of change (or, in the case of a change made to a principal method, only the items arising after the date of distribution or transfer) are accounted for under the new method of accounting. The definition of cut-off basis is expanded in the final regulations under section 381(c)(5) to clarify that a taxpayer that makes a change within the last-in, first-out (LIFO) inventory method from one LIFO method or sub-method to another LIFO method or sub-method does not recompute the cost of its beginning inventories for the year of change under the new LIFO inventory method when it implements the change on a cut-off basis.

The final regulations under section 381(c)(5) also make certain organizational changes to § 1.381(c)(5)–1(e)(6) of the notice of proposed rulemaking with respect to the integration of inventories after a section 381(a) transaction. These changes do not change the substantive rules in the notice of proposed rulemaking but are intended to clarify that the rules apply whether the inventory method of either the acquiring corporation or the transferor or distributor corporation must be changed to a principal method. The IRS and the Treasury Department are considering issuing additional guidance that would clarify or modify the manner in which inventories must be combined and integrated in a section 381(a) transaction.

Finally, the final regulations correct the discussion of section 472(d) that was in § 1.381(c)(5)–1(e)(6)(ii)(B) of the notice of proposed rulemaking. Section 1.381(c)(5)–1(e)(6)(ii)(B) of the notice of proposed rulemaking provided that the restoration to cost of any previous write-downs to market value shall be taken into account fully in the year that included the date of distribution or transfer. Consistent with the amendments to section 472(d), the final regulations provide that these restorations shall be taken into account by the acquiring corporation ratably in each of the three taxable years beginning with the taxable year that includes the date of the distribution or transfer.

The IRS and the Treasury Department are aware that some practitioners were concerned that the notice of proposed rulemaking did not provide audit protection when an acquiring corporation uses a principal method after the date of distribution or transfer. For the reasons expressed in the preamble to the notice of proposed rulemaking, the final regulations continue to deny audit protection in these circumstances. Unlike changes in method of accounting under section 446(e) for which a taxpayer must disclose its use of a method of accounting, proper or improper, as part of the process for obtaining consent to make the change, changes to a principal method pursuant to these final regulations are made on the acquiring corporation's tax return with no disclosure on a Form 3115, ''Application for Change in Accounting Method,'' that a change in method of accounting occurred.

The IRS and the Treasury Department are aware that some taxpayers desire to obtain audit protection for a required change to a principal method by filing a Form 3115. However, the IRS and the Treasury Department believe that, given

the need for efficient tax administration, filing a Form 3115 merely to obtain audit protection should not be allowed. Although audit protection is not provided for a change to a principal method required under these regulations, audit protection ordinarily is provided for any voluntary change in method of accounting for which a party to a section 381(a) transaction obtains consent under section 446(e) and the generally applicable administrative procedures.

Special Analyses

It has been determined that this Treasury decision is not a significant regulatory action as defined in Executive Order 12866. Therefore, a regulatory assessment is not required. It is hereby certified that these regulations will not have a significant economic impact on a substantial number of small entities. Therefore, a regulatory flexibility analysis under the Regulatory Flexibility Act (5 U.S.C. chapter 6) is not required. This certification is based on the belief of the IRS and the Treasury Department that the corporate reorganizations and tax-free liquidations described in section 381(a) generally involve large entities. In addition, these final regulations reduce the burden on taxpayers by clarifying and simplifying the existing rules and make the procedures for requesting changes in methods of accounting relating to corporate reorganizations and tax-free liquidations described in section 381(a) consistent with the general rules for requesting changes in methods of accounting. Pursuant to section 7805(f), the notice of proposed rulemaking that preceded these final regulations was submitted to the Chief Counsel for Advocacy of the Small Business Administration for comment on its impact on small business. Consistent with 5 U.S.C. section 553(d), the regulations are effective 30 days after publication of this document in the **Federal Register**.

Drafting Information

The principal author of these final regulations is Cheryl Oseekey, Office of Associate Chief Counsel (Income Tax and Accounting). However, other personnel from the IRS and the Treasury Department participated in their development.

List of Subjects in 26 CFR Part 1

Income taxes, Reporting and recordkeeping requirements.

Adoption of Amendments to the Regulations

Accordingly, 26 CFR part 1 is amended as follows:

PART 1—INCOME TAXES

■ **Paragraph 1.** The authority citation for part 1 continues to read in part as follows:

Authority: 26 U.S.C. 7805 * * *

Section 1.381(c)(4)–1 also issued under 26 U.S.C. 381(c)(4). * * *

Section 1.381(c)(5)–1 also issued under 26 U.S.C. 381(c)(5). * * *

■ **Par. 2.** In § 1.381(a)–1, paragraph (b)(1)(i) is revised and paragraph (e) is added to read as follows:

§ 1.381(a)–1 General rule relating to carryovers in certain corporate acquisitions.

* * * * *

(b) * * *

(1) * * * (i) The complete liquidation of a subsidiary corporation upon which no gain or loss is recognized in accordance with the provisions of section 332;

* * * * *

(e) *Effective/applicability date.* The rules of paragraph (b)(1)(i) of this section apply to corporate reorganizations and tax-free liquidations described in section 381(a) that occur on or after August 31, 2011.

■ **Par. 3.** Section 1.381(c)(4)–1 is revised to read as follows:

§ 1.381(c)(4)–1 Method of accounting.

(a) *Introduction*—(1) *Purpose.* This section provides guidance regarding the method of accounting or combination of methods (other than inventory and depreciation methods) an acquiring corporation must use following a distribution or transfer to which sections 381(a) and 381(c)(4) apply and how to implement any associated change in method of accounting. See § 1.381(c)(5)–1 for guidance regarding the inventory method an acquiring corporation must use following a distribution or transfer to which sections 381(a) and 381(c)(5) apply. See § 1.381(c)(6)–1 for guidance regarding the depreciation method an acquiring corporation must use following a distribution or transfer to which sections 381(a) and 381(c)(6) apply.

(2) *Carryover method requirement for separate and distinct trades or businesses.* In a transaction to which section 381(a) applies, if an acquiring corporation continues to operate a trade or business of the parties to the section 381(a) transaction as a separate and distinct trade or business after the date of distribution or transfer, the acquiring corporation must use a carryover method as defined in paragraph (b)(5) of this section for each continuing trade or business, unless either the carryover method is impermissible and must be changed under paragraph (a)(4) of this section or the acquiring corporation changes the carryover method in accordance with paragraph (a)(5) of this section. The carryover method requirement applies to the overall method of accounting (for example, an accrual method of accounting) and any special method of accounting (for example, the percentage of completion method of accounting described in section 460) as defined in paragraph (b)(2) of this section used by each trade or business after the date of distribution or transfer. The acquiring corporation need not secure the Commissioner's consent to continue a carryover method.

(3) *Principal method requirement for trades or businesses not operated as separate and distinct trades or businesses.* In a transaction to which section 381(a) applies, if an acquiring corporation does not operate the trades or businesses of the parties to the section 381(a) transaction as separate and distinct trades or businesses after the date of distribution or transfer, the acquiring corporation must use a principal method determined under paragraph (c) of this section, unless either the principal method is impermissible and must be changed under paragraph (a)(4) of this section or the acquiring corporation changes the principal method in accordance with paragraph (a)(5) of this section. The principal method requirement applies to the overall method of accounting (for example, the cash receipts and disbursements method of accounting) and any special method of accounting (for example, the installment method under section 453) as defined in paragraph (b)(2) of this section used by each integrated trade or business after the date of distribution or transfer. The acquiring corporation must change to a principal method in accordance with paragraph (d)(1) of this section for each integrated trade or business and need not secure the Commissioner's consent to use a principal method.

(4) *Carryover method or principal method not a permissible method.* If a carryover method or principal method is not a permissible method of accounting, the acquiring corporation must secure the Commissioner's consent to change to a permissible method of accounting as provided in paragraph (d)(2) of this section. If the acquiring corporation must use a single method of accounting for a particular item after the date of distribution or transfer regardless of the

number of separate and distinct trades or businesses operated on that date, the acquiring corporation must use the principal method for that item as determined under paragraph (c) of this section, unless either the principal method is impermissible and must be changed under this paragraph (a)(4) or the acquiring corporation changes the principal method in accordance with paragraph (a)(5) of this section.

(5) *Voluntary change.* Any party to a section 381(a) transaction may request permission under section 446(e) to change a method of accounting for the taxable year in which the transaction occurs or is expected to occur. For trades or businesses that will not operate as separate and distinct trades or businesses after the date of distribution or transfer, a change in method of accounting for the taxable year that includes that date will be granted only if the requested method is the method that the acquiring corporation must use after the date of distribution or transfer. The time and manner of obtaining the Commissioner's consent to change to a different method of accounting is described in paragraph (d)(2) of this section.

(6) *Examples.* The following examples illustrate the rules of this paragraph (a). Unless otherwise noted, the carryover method is a permissible method of accounting.

Example (1). *Carryover method for separate and distinct trades or businesses after the date of distribution or transfer*—(i) *Facts.* X Corporation operates an employment agency that uses the overall cash receipts and disbursements method of accounting. T Corporation operates an educational institution that uses an overall accrual method of accounting. X Corporation acquires the assets of T Corporation in a transaction to which section 381(a) applies. After the date of distribution or transfer, X Corporation operates the employment agency as a trade or business that is separate and distinct from the educational institution.

(ii) *Conclusion.* Because after the date of distribution or transfer X Corporation operates the employment agency as a separate and distinct trade or business, under paragraph (a)(2) of this section X Corporation must use the carryover method for each continuing trade or business, unless either the carryover method is impermissible and must be changed under paragraph (a)(4) of this section or X Corporation changes the carryover method in accordance with paragraph (a)(5) of this section. As defined in paragraph (b)(5) of this section, the carryover method for the employment agency is the cash receipts and disbursements method of accounting and the carryover method for the educational institution is the accrual method of accounting used by T Corporation immediately prior to the date of distribution or transfer. There is no change in method of accounting, and X Corporation need not secure the Commissioner's consent to use either carryover method.

Example (2). *Carryover method for a special method of accounting*—(i) *Facts.* X Corporation provides personal grooming consulting and T Corporation provides weight management consulting. Both X Corporation and T Corporation use the same overall accrual method of accounting. X Corporation has elected to use the recurring item exception under § 1.461–5. T Corporation does not use the recurring item exception. X Corporation acquires the assets of T Corporation in a transaction to which section 381(a) applies. After the date of distribution or transfer, X Corporation operates the personal grooming consulting business as a trade or business that is separate and distinct from the weight management consulting business.

(ii) *Conclusion.* Because after the date of distribution or transfer, X Corporation operates the personal grooming consulting business as a separate and distinct trade or business, under paragraph (a)(2) of this section X Corporation must use a carryover method for each continuing trade or business, unless either the carryover method is impermissible and must be changed under paragraph (a)(4) of this section or X Corporation changes the carryover method in accordance with paragraph (a)(5) of this section. As defined in paragraph (b)(5) of this section, the carryover method for the overall method of accounting for each trade or business is the accrual method used immediately prior to the date of distribution or transfer. The carryover method for the special method of accounting for the personal grooming consulting business is the recurring item exception under § 1.461–5 while the carryover method for the weight management consulting business is not to use the recurring item exception under § 1.461–5. There is no change in method of accounting, and X Corporation need not secure the Commissioner's consent to use the carryover methods of accounting.

Example (3). *Carryover method for a special method of accounting not permissible*—(i) *Facts.* X Corporation is an engineering firm that uses the overall cash receipts and disbursements method of accounting and has elected under section 171 to amortize bond premium with respect to its taxable bonds acquired at a premium. T Corporation is a manufacturer that uses an overall accrual method of accounting and has not made a section 171 election to amortize bond premium with respect to its taxable bonds acquired at a premium. X Corporation acquires the assets of T Corporation in a transaction to which section 381(a) applies. After the date of distribution or transfer, X Corporation operates the engineering firm as a trade or business that is separate and distinct from the manufacturing business.

(ii) *Conclusion.* Because after the date of distribution or transfer X Corporation operates the engineering firm as a separate and distinct trade or business, under paragraph (a)(2) of this section X Corporation must use a carryover method for each continuing trade or business, unless either the carryover method is impermissible and must be changed under paragraph (a)(4) of this section or X Corporation changes the carryover method in accordance with paragraph (a)(5) of this section. As defined in paragraph (b)(5) of this section, the carryover method for the overall method of accounting for the engineering firm is the cash receipts and disbursements method used by X Corporation immediately prior to the date of distribution or transfer, and the carryover method for the overall method of accounting for the manufacturing business is the accrual method used by T Corporation immediately prior to the date of distribution or transfer. There is no change in method of accounting, and X Corporation need not secure the Commissioner's consent to use either carryover method. Notwithstanding that after the date of distribution or transfer X Corporation has two separate and distinct trades or businesses, X Corporation is permitted only one method of accounting for amortizable bond premium under section 171. Because after the date of distribution or transfer X Corporation must use a single method of accounting for bond premium for all trades or businesses, X Corporation must use the principal method for that item as determined under paragraph (c) of this section, unless either the principal method is impermissible and must be changed under paragraph (a)(4) of this section or X Corporation changes that method in accordance with paragraph (a)(5) of this section. X Corporation must change to the principal method in accordance with paragraph (d)(1) of this section. If amortizing bond premium is not the principal method, X Corporation may make an election to amortize bond premium to the extent permitted by section 171. See paragraph (e)(2) of this section for rules on making elections.

(b) *Definitions.* For purposes of this section—

(1) *Method of accounting.* A method of accounting has the same meaning as provided in section 446 and any applicable Income Tax Regulations.

(2) *Special method of accounting.* A special method of accounting is a method expressly permitted or required by the Internal Revenue Code, Income Tax Regulations, or administrative guidance published in the Internal Revenue Bulletin that deviates from the normal application of the cash receipts and disbursements method or an accrual method of accounting. The installment method under section 453, the mark-to-market method under section 475, the amortization of bond premium under section 171, the percentage of completion method under section 460, the recurring item exception of § 1.461–5, and the income deferral methods under section 455 and § 1.451–5 are examples of special methods of accounting. See § 1.446–1(c)(1)(iii).

(3) *Adoption of a method of accounting.* Adoption of a method of accounting has the same meaning as provided in § 1.446–1(e)(1).

(4) *Change in method of accounting.* A change in method of accounting has the same meaning as provided in § 1.446–1(e)(2).

(5) *Carryover method.* A carryover method for the overall method of accounting is the overall method of accounting that each party to a section 381(a) transaction uses for each separate and distinct trade or business immediately prior to the date of distribution or transfer. The carryover method for a special method of accounting for an item is the special method of accounting for that item that each party to a section 381(a) transaction uses for each separate and distinct trade or business immediately prior to the date of distribution or transfer.

(6) *Principal method.* A principal method is an overall or special method of accounting that is determined under paragraph (c) of this section.

(7) *Permissible method of accounting.* A permissible method of accounting is a method of accounting that is proper or permitted under the Internal Revenue Code or any applicable Income Tax Regulations.

(8) *Acquiring corporation.* An acquiring corporation has the same meaning as provided in § 1.381(a)–1(b)(2).

(9) *Distributor corporation.* A distributor corporation means the corporation, foreign or domestic, that distributes its assets to another corporation described in section 332(b) in a distribution to which section 332 (relating to liquidations of subsidiaries) applies.

(10) *Transferor corporation.* A transferor corporation means the corporation, foreign or domestic, that transfers its assets to another corporation in a transfer to which section 361 (relating to nonrecognition of gain or loss to corporations) applies, but only if—

(i) The transfer is in connection with a reorganization described in section 368(a)(1)(A), (a)(1)(C), or (a)(1)(F), or

(ii) The transfer is in connection with a reorganization described in section 368(a)(1)(D) or (a)(1)(G), provided the requirements of section 354(b) are met.

(11) *Parties to the section 381(a) transaction.* Parties to the section 381(a) transaction means the acquiring corporation and the distributor or transferor corporation that participate in a transaction to which section 381(a) applies.

(12) *Date of distribution or transfer.* The date of distribution or transfer has the same meaning as provided in section 381(b)(2) and § 1.381(b)–1(b).

(13) *Separate and distinct trades or businesses.* Separate and distinct trades or businesses has the same meaning as provided in § 1.446–1(d).

(14) *Gross receipts.* Gross receipts means all the receipts, including amounts that are excludible from gross income, that must be taken into account under the method of accounting used in a representative period (determined without regard to this section) for federal income tax purposes. For example, gross receipts includes income from investments, amounts received for services, rents, total sales (net of returns and allowances), and both taxable and tax-exempt interest. See paragraph (e)(5) of this section for rules on determining the representative period.

(15) *Audit protection.* Audit protection means, for purposes of paragraph (d)(1) of this section, that the IRS will not require an acquiring corporation that is required to change a method of accounting under paragraph (a)(3) of this section to change that method for a taxable year ending prior to the taxable year that includes the date of distribution or transfer.

(16) *Section 481(a) adjustment.* The section 481(a) adjustment means an adjustment that must be taken into account as required under section 481(a) to prevent amounts from being duplicated or omitted when the taxable income of an acquiring corporation is computed under a method of accounting different from the method used to compute taxable income for the preceding taxable year.

(17) *Cut-off basis.* A cut-off basis means a manner in which a change in method of accounting is made without a section 481(a) adjustment and under which only the items arising after the beginning of the year of change (or, in the case of a change made under paragraph (d)(1) of this section, after the date of distribution or transfer) are accounted for under the new method of accounting.

(18) *Adjustment period.* The adjustment period means the number of taxable years for taking into account the section 481(a) adjustment required as a result of a change in method of accounting.

(19) *Component trade or business.* A component trade or business is a trade or business of a party to the section 381(a) transaction that will be combined and integrated with a trade or business of the other party to the section 381 transaction. See paragraph (e)(4)(ii) of this section for the determination of whether a trade or business is operated as a separate and distinct trade or business after the date of distribution or transfer.

(c) *Principal method*—(1) *In general.* For each integrated trade or business, the principal method is generally the method of accounting used by the component trade or business of the acquiring corporation immediately prior to the date of distribution or transfer. If, however, the component trade or business of the distributor or transferor corporation is larger than the component trade or business of the acquiring corporation on the date of distribution or transfer, the principal method is the method used by the component trade or business of the distributor or transferor corporation immediately prior to that date. If the larger component trade or business does not have a special method of accounting for a particular item immediately prior to the date of distribution or transfer, the principal method for that item is the method of accounting used by the component trade or business that does have a special method of accounting for that item. See paragraph (e)(9) of this section for special rules concerning methods of accounting that are elected on a project-by-project, job-by-job, or other similar basis. For each integrated trade or business, the component trade or business of the distributor or transferor corporation is larger than the component trade or business of the acquiring corporation on the date of distribution or transfer if—

(i) The aggregate of the adjusted bases of the assets held by each component trade or business of the distributor or transferor corporation (determined under section 1011 and any applicable Income Tax Regulations) exceeds the aggregate of the adjusted bases of the assets of each component trade or business of the acquiring corporation immediately prior to the date of distribution or transfer, and

(ii) The aggregate of the gross receipts for a representative period of each component trade or business of the distributor or transferor corporation exceeds the aggregate of the gross receipts for the same period of each component trade or business of the acquiring corporation. See paragraph (e)(5) of this section for rules on determining the representative period.

(2) *Multiple component trades or businesses with different principal methods.* If a party to the section 381(a) transaction has multiple component trades or businesses and more than one principal overall method of accounting or more than one principal special method of accounting for an item, then the acquiring corporation may choose which of the principal methods of accounting used by such component trades or businesses will be the

principal methods of the integrated trade or business. The acquiring corporation must choose a principal method that is a permissible method of accounting. In general, a change to a principal method in a transaction to which section 381(a) and paragraph (a)(3) of this section applies is made under paragraph (d)(1) of this section.

(3) *Examples.* The following examples illustrate the rules of this paragraph (c). Unless otherwise noted, the principal method is a permissible method of accounting.

Example (1). *Principal method is the method used by the acquiring corporation*—(i) *Facts.* X Corporation and T Corporation each operate an employment agency. X Corporation uses the overall cash receipts and disbursements method of accounting, and T Corporation uses an overall accrual method of accounting. X Corporation acquires the assets of T Corporation in a transaction to which section 381(a) applies. The adjusted bases of the assets in X Corporation's employment agency immediately prior to the date of distribution or transfer exceed the adjusted bases of the assets in T Corporation's employment agency, and the gross receipts in X Corporation's employment agency for the representative period exceed the gross receipts of T Corporation's employment agency for the period. After the date of distribution or transfer, X Corporation's employment agency will not be operated as a trade or business that is separate and distinct from T Corporation's employment agency.

(ii) *Conclusion.* Because after the date of distribution or transfer X Corporation will not operate its employment agency as a separate and distinct trade or business, X Corporation must use a principal method under paragraph (a)(3) of this section, unless either the principal method is impermissible and must be changed under paragraph (a)(4) of this section or X Corporation changes the principal method in accordance with paragraph (a)(5) of this section. Because on the date of distribution or transfer T Corporation's employment agency is not larger than X Corporation's employment agency, the principal method for the overall method of accounting is the cash receipts and disbursements method used by X Corporation's employment agency. X Corporation need not secure the Commissioner's consent to use this method of accounting. However, in accordance with paragraph (d)(1) of this section, X Corporation must change the method of accounting for the employment agency acquired from T Corporation to the cash receipts and disbursements method.

Example (2). *Principal method is the method used by the acquiring corporation*—(i) *Facts.* The facts are the same as in *Example* (1), except that the gross receipts of T Corporation's employment agency for the representative period exceed the gross receipts of X Corporation's employment agency for the period.

(ii) *Conclusion.* The result is the same as in *Example* (1). Although the gross receipts of T Corporation's employment agency exceed the gross receipts of X Corporation's employment agency, T Corporation's employment agency is not larger than X Corporation's employment agency because the adjusted bases of the assets of T Corporation's employment agency do not exceed the adjusted bases of the assets of X Corporation's employment agency. Thus, the principal method for the overall method of accounting is the cash receipts and disbursements method of accounting used by X Corporation's employment agency immediately prior to the date of distribution or transfer. X Corporation need not secure the Commissioner's consent to use this method of accounting. However, in accordance with paragraph (d)(1) of this section, X Corporation must change the method of accounting for the employment agency business acquired from T Corporation to the cash receipts and disbursements method.

Example (3). *Principal method is the method used by the distributor or transferor corporation*—(i) *Facts.* The facts are the same as in *Example* (2), except that the adjusted bases of the assets held by T Corporation's employment agency immediately prior to the date of distribution or transfer exceed the adjusted bases of the assets held by X Corporation's employment agency.

(ii) *Conclusion.* The principal method for the overall method of accounting is the accrual method of accounting used by T Corporation's employment agency immediately prior to the date of distribution or transfer because on the date of distribution or transfer T Corporation's employment agency is larger than X Corporation's employment agency. The adjusted bases of the assets of T Corporation's employment agency exceed the adjusted bases of the assets of X Corporation's employment agency, and the gross receipts of T Corporation's employment agency exceed the gross receipts of X Corporation's employment agency. X Corporation need not secure the Commissioner's consent to use this method of accounting. However, in accordance with paragraph (d)(1) of this section, X Corporation must change the method of accounting for the employment agency business it operated prior to the date of distribution or transfer to the accrual method of accounting used by T Corporation's employment agency immediately prior to the date of distribution or transfer.

Example (4). *Impermissible principal method*—(i) *Facts.* The facts are the same as in *Example* (1), except that X Corporation is prohibited under section 448 from using the cash receipts and disbursements method of accounting after the date of distribution or transfer.

(ii) *Conclusion.* Because section 448 prohibits X Corporation from using the cash receipts and disbursements method of accounting, X Corporation is not permitted to use the principal method for the overall method of accounting as determined in *Example* (1). Because after the date of distribution or transfer that method is not a permissible method, under paragraph (a)(4) of this section X Corporation must secure the Commissioner's consent to change to a permissible method in accordance with the procedures set forth in paragraph (d)(2) of this section.

Example (5). *Voluntary change not allowable*—(i) *Facts.* The facts are the same as in *Example* (4), except that T Corporation wants to discontinue using the overall accrual method of accounting for its employment agency and change to the cash receipts and disbursements method for the taxable year in which the section 381(a) transaction occurs or is expected to occur.

(ii) *Conclusion.* Under paragraph (a)(5) of this section, the Commissioner will grant a request to change a method of accounting for the taxable year that includes the date of distribution or transfer only if the requested method is the method that the acquiring corporation must use after the date of distribution or transfer. The Commissioner will not consent to a request by T Corporation to change to the cash receipts and disbursements method for the taxable year in which the section 381(a) transaction occurs or is expected to occur because X Corporation cannot use the cash receipts and disbursements method after the date of distribution or transfer.

Example (6). *Principal methods are the acquiring corporation's methods*—(i) *Facts.* X Corporation and T Corporation each publishes magazines. X Corporation acquires the assets of T Corporation in a transaction to which section 381(a) applies. Both X Corporation and T Corporation use an overall accrual method of accounting. X Corporation has elected to defer income from its subscription sales under section 455. T Corporation has not elected to defer income from its subscription sales under section 455 and instead has recognized the income from these sales in accordance with section 451. The adjusted bases of the assets in X Corporation's publication business immediately prior to the date of distribution or transfer exceed the adjusted bases of the assets in T Corporation's publication business, and the gross receipts in X Corporation's publication business for the representative period exceed the gross receipts in T Corporation's publication business for the representative period. After the date of distribution or transfer, X Corporation will not operate its publication business as a trade or business that is separate and distinct from T Corporation's publication business.

(ii) *Conclusion.* Because after the date of distribution or transfer X Corporation will not operate its publication business as a separate and distinct trade or business, X Corporation must use the principal method under paragraph (a)(3) of this section, unless either the principal method is impermissible and must be changed under paragraph (a)(4) of this section or X Corporation changes the principal method in accordance with paragraph (a)(5) of this section. The adjusted bases of the assets in T Corporation's publication business do not exceed the adjusted bases of the assets in X Corporation's publication business, and the gross receipts in T Corporation's publication business do not exceed the gross receipts in X Corporation's publication business. Because on the date of distribution or transfer T Corporation's publication business is not

larger than X Corporation's publication business, the principal method for the overall method of accounting is the accrual method used by X Corporation's publication business immediately prior to the date of distribution or transfer. The principal method for subscription sales is the section 455 deferral method used by X Corporation immediately prior to the date of distribution or transfer. X Corporation need not secure the Commissioner's consent to use the principal method for either the overall method of accounting or the special method of accounting. However, in accordance with paragraph (d)(1) of this section, X Corporation must change both the overall method of accounting and the special method of accounting for the publication business acquired from T Corporation to the accrual method and the section 455 deferral method used by X Corporation immediately prior to the date of distribution or transfer.

Example (7). *Principal methods are the acquiring corporation's methods*—(i) *Facts*. The facts are the same as in *Example* (6), except that the adjusted bases of the assets in T Corporation's publication business immediately prior to the date of distribution or transfer exceed the adjusted bases of the assets in X Corporation's business.

(ii) *Conclusion*. The result is the same as in *Example* (6). Because on the date of distribution or transfer T Corporation's publication business is not larger than X Corporation's publication business, the principal method for the overall method of accounting is the accrual method used by X Corporation's publication business immediately prior to the date of distribution or transfer. The principal method for subscription sales is the section 455 deferral method used by X Corporation immediately prior to the date of distribution or transfer. X Corporation need not secure the Commissioner's consent to use the principal method for either the overall method of accounting or the special method of accounting. However, in accordance with paragraph (d)(1) of this section, X Corporation must change both the overall method of accounting and the special method of accounting for the publication business acquired from T Corporation to the accrual method and the section 455 deferral method used by X Corporation immediately prior to the date of distribution or transfer.

Example (8). *Principal method determination when larger component trade or business does not have a special method of accounting*—(i) *Facts*. X Corporation and T Corporation both install ice skating rinks. Both X Corporation and T Corporation use an overall accrual method of accounting for their respective businesses. X Corporation completes its installation contracts within the contracting year and uses an accrual method of accounting to recognize the revenue from its installation contracts. T Corporation's installation contracts are subject to section 460, and T Corporation recognizes the revenue from such contracts under the percentage-of-completion method. X Corporation acquires the assets of T Corporation in a transaction to which section 381(a) applies. The adjusted bases of the assets in X Corporation's installation business immediately prior to the date of distribution or transfer exceed the adjusted bases of the assets in T Corporation's installation business, and the gross receipts in X Corporation's installation business for the representative period exceed the gross receipts in T Corporation's installation business for the representative period. After the date of distribution or transfer, X Corporation will not operate its installation business as a trade or business that is separate and distinct from T Corporation's installation business.

(ii) *Conclusion*. Because after the date of distribution or transfer X Corporation will not operate its installation business as a separate and distinct trade or business, X Corporation must use a principal method under paragraph (a)(3) of this section, unless either the principal method is impermissible and must be changed under paragraph (a)(4) of this section or X Corporation changes the principal method in accordance with paragraph (a)(5) of this section. The adjusted bases of the assets in T Corporation's installation business do not exceed the adjusted bases of the assets in X Corporation's installation business, and the gross receipts in T Corporation's installation business do not exceed the gross receipts in X Corporation's installation business. Because on the date of distribution or transfer T Corporation's installation business is not larger than X Corporation's installation business, the principal method for the overall method of accounting is the accrual method used by X Corporation's installation business immediately prior to the date of distribution or transfer. X Corporation need not secure the Commissioner's consent to use the principal method for the overall method of accounting. However, in accordance with paragraph (d)(1) of this section, X Corporation must change the overall method of accounting for the installation business acquired from T Corporation to the accrual method used by X Corporation. Under paragraph (c) of this section, the principal method for T Corporation's long-term contracts is the percentage-of-completion method used by T Corporation immediately prior to the date of distribution or transfer because X Corporation's installation business does not have a method of accounting for long-term contracts. There is no change in method of accounting, and X Corporation need not secure the Commissioner's consent to use T Corporation's percentage-of-completion method.

Example (9). *Principal method determination with a combined trade or business and a separate and distinct trade or business*—(i) *Facts*. X Corporation operates a tennis academy as a trade or business that is separate and distinct from its trade or business of operating a golf academy. X Corporation uses the overall cash receipts and disbursements method of accounting for the tennis academy and an overall accrual method of accounting for the golf academy. T Corporation operates a tennis academy and uses an accrual method of accounting for the overall method. X Corporation acquires the assets of T Corporation in a transaction to which section 381(a) applies. After the date of distribution or transfer, X Corporation will not operate its tennis academy as a trade or business that is separate and distinct from T Corporation's tennis academy. X Corporation will continue to operate its golf academy as a trade or business that is separate and distinct from the operation of the tennis academy. The adjusted bases of the assets in T Corporation's tennis academy exceed the adjusted bases of the assets in X Corporation's tennis academy immediately prior to the date of distribution or transfer. The gross receipts of T Corporation's tennis academy for the representative period exceed the gross receipts of X Corporation's tennis academy for that period.

(ii) *Conclusion*. Because after the date of distribution or transfer X Corporation will not operate its tennis academy as a separate and distinct trade or business, X Corporation must use a principal method under paragraph (a)(3) of this section, unless either the principal method is impermissible and must be changed under paragraph (a)(4) of this section or X Corporation changes the principal method in accordance with paragraph (a)(5) of this section. Because on the date of distribution or transfer the tennis academy operated by T Corporation is larger than the tennis academy operated by X Corporation, the principal method for the overall method of accounting for the combined tennis academy business is the accrual method used by T Corporation's tennis academy immediately prior to the date of distribution or transfer. X Corporation need not secure the Commissioner's consent to use the principal method for the overall method of accounting. However, in accordance with paragraph (d)(1) of this section, X Corporation must change the method of accounting for its tennis academy to the accrual method. Because X Corporation will operate the golf academy as a separate trade or business, under paragraph (a)(2) of this section X Corporation must continue to use the accrual method that it used immediately prior to the date of distribution or transfer as the carryover method for the golf academy. There is no change in method of accounting, and X Corporation need not secure the Commissioner's consent to use the carryover method.

Example (10). *Principal method determination with multiple component trades or businesses*—(i) *Facts*. The facts are the same as in *Example* (9), except that after the date of distribution or transfer X Corporation will not operate its golf academy as a trade or business that is separate and distinct from the tennis academy. In addition, X Corporation's component trades or businesses are larger than T Corporation's component trade or business: (1) the adjusted bases of the assets of X Corporation's tennis academy and golf academy businesses, in the aggregate, exceed the adjusted bases of the assets held by T Corporation's tennis academy; and (2) the gross receipts for the representative period of X Corporation's tennis academy and golf academy businesses, in the aggregate, exceed the gross receipts in T Corporation's tennis academy.

(ii) *Conclusion*. Because on the date of distribution or transfer T Corporation's tennis academy is not larger than X Corporation's

combined tennis academy and golf academy, the principal method for the overall method of accounting is the method of accounting used by the component trades or businesses of X Corporation that will be combined with T Corporation's component trade or business on that date. Because on the date of distribution or transfer X Corporation operates two component trades or businesses with different overall methods of accounting that will be integrated after the date of distribution or transfer, X Corporation may choose under paragraph (c)(2) of this section which overall method (and any special method of accounting) used by its component trades or businesses will be the principal method. X Corporation may choose to use either the accrual method used by the golf academy or the cash receipts and disbursements method used by its tennis academy as the principal method after the date of distribution or transfer, if either method is a permissible method. In accordance with paragraph (d)(1) of this section, X Corporation must change T Corporation's overall method of accounting to the principal method. Under paragraph (a)(3) of this section, X Corporation also must change either its golf academy business or its tennis academy business, depending on which principal method X Corporation selects, to the principal method.

(d) *Procedures for changing a method of accounting*—(1) *Change made to principal method under paragraph (a)(3) of this section*—(i) *Section 481(a) adjustment*—(A) *In general.* An acquiring corporation that changes its method of accounting or the distributor or transferor corporation's method of accounting under paragraph (a)(3) of this section does not need to secure the Commissioner's consent to use the principal method. To the extent the use of a principal method constitutes a change in method of accounting, the change in method is treated as a change initiated by the acquiring corporation for purposes of section 481(a)(2). Any change to a principal method, whether the change relates to a trade or business of the acquiring corporation or a trade or business of the distributor or transferor corporation, must be reflected on the acquiring corporation's federal income tax return for the taxable year that includes the date of distribution or transfer. The amount of the section 481(a) adjustment and the adjustment period, if any, necessary to implement a change to the principal method are determined under § 1.446–1(e) and the applicable administrative procedures that govern voluntary changes in methods of accounting under section 446(e). If the Internal Revenue Code, the Income Tax Regulations, or administrative procedures require that a method of accounting be implemented on a cut-off basis, the acquiring corporation must implement the change on a cut-off basis as of the date of distribution or transfer on its federal income tax return for the taxable year that includes the date of distribution or transfer. If the Internal Revenue Code, the Income Tax Regulations, or administrative procedures require a section 481(a) adjustment, the acquiring corporation must determine the section 481(a) adjustment and include the appropriate amount of the section 481(a) adjustment on its federal income tax return for the taxable year that includes the date of distribution or transfer and subsequent taxable year(s), as necessary. This adjustment is determined by the acquiring corporation as of the beginning of the day that is immediately after the date of distribution or transfer.

(B) *Example.* The following example illustrates the rules of this paragraph (d)(1)(i):

Example. X Corporation uses the overall cash receipts and disbursements method of accounting, and T Corporation uses an overall accrual method of accounting. X Corporation acquires the assets of T Corporation in a transaction to which section 381(a) applies. X Corporation determines that under the rules of paragraph (c)(1) of this section X Corporation must change the method of accounting for the business acquired from T Corporation to the cash receipts and disbursements method. X Corporation will determine the section 481(a) adjustment pertaining to the change to the cash receipts and disbursements method by consolidating the adjustments (whether the amounts thereof represent increases or decreases in items of income or deductions) arising with respect to balances in the various accounts, such as accounts receivable, as of the beginning of the day that immediately follows the day on which X Corporation acquires the assets of T Corporation. X Corporation will reflect this adjustment, or an appropriate part thereof, on its federal income tax return for the taxable year that includes the date of distribution or transfer.

(ii) *Audit protection.* Notwithstanding any other provision in any other Income Tax Regulation or administrative procedure, no audit protection is provided for any change in method of accounting under paragraph (d)(1) of this section.

(iii) *Other terms and conditions.* Except as otherwise provided in this section, other terms and conditions provided in § 1.446–1(e) and the applicable administrative procedures for voluntary changes in method of accounting under section 446(e) apply to a change in method of accounting under this section. Thus, for example, if the administrative procedures for a particular change in method of accounting have a term and condition that provides for the acceleration of the section 481(a) adjustment period, this term and condition applies to a change made under this paragraph (d)(1). However, any scope limitation in the applicable administrative procedures will not apply for purposes of making a change under this paragraph (d)(1). For example, if the administrative procedures provide as a limitation that an identical change in method of accounting is barred for a period of years, this limitation will not bar a change to the principal method made under this section.

(2) *Change made to a method of accounting under paragraph (a)(4) or (a)(5) of this section*—(i) *In general.* A party to a section 381(a) transaction that changes a method of accounting under either paragraph (a)(4) or paragraph (a)(5) of this section must follow the provisions of § 1.446–(1)(e) and the applicable administrative procedures, including scope limitations, for voluntary changes in method of accounting under section 446(e), except as provided in paragraphs (d)(2)(ii) and (d)(2)(iii) of this section. An application on Form 3115, ''Application for Change in Accounting Method,'' filed with the IRS to change a method of accounting under this paragraph (d)(2) should be labeled ''Filed under section 381(c)(4)'' at the top.

(ii) *Final year limitation.* Any scope limitation relating to the final year of a trade or business will not apply to a taxpayer that changes its method of accounting in the final year of a trade or business that is terminated as the result of a section 381(a) transaction.

(iii) *Time to file.* Under the authority of § 1.446–1(e)(3)(ii), for a change in method of accounting requiring advance consent, the application for a change in method of accounting (for example, Form 3115) must be filed with the IRS on or before the later of—

(A) The due date for filing a Form 3115 as specified in § 1.446–1(e), for example, the last day of the taxable year in which the distribution or transfer occurred, or

(B) The earlier of—

(*1*) The day that is 180 days after the date of distribution or transfer, or

(*2*) The day on which the acquiring corporation files its federal income tax return for the taxable year in which the distribution or transfer occurred.

(e) *Rules and procedures*—(1) *No method of accounting.* If a party to a section 381(a) transaction is not using a method of accounting, does not have a method of accounting for a particular item, or came into existence as a result of the transaction, the party will not be treated as having a method of accounting different from that used by

another party to the section 381(a) transaction.

(2) *Elections and adoptions allowed.* If an election does not require the Commissioner's consent, an acquiring corporation or a distributor or transferor corporation is not precluded from making any election that is otherwise permissible for the taxable year that includes the date of distribution or transfer. For purposes of this section, a corporation shall be deemed as having made any election as of the first day of the taxable year that includes the date of distribution or transfer. Similarly, where adoption is permissible, an acquiring corporation or a distributor or transferor corporation may adopt any permissible method of accounting for the taxable year that includes the date of distribution or transfer.

(3) *Elections continue after section 381(a) transaction*—(i) *General rule.* An acquiring corporation is not required to renew any election not otherwise requiring renewal and previously made by it or by a distributor or transferor corporation for a carryover method or a principal method if the acquiring corporation uses the method after the section 381(a) transaction. If the acquiring corporation uses a method after the date of distribution or transfer, an election made by the acquiring corporation or by a distributor or transferor corporation for that method that was in effect on the date of distribution or transfer continues after the section 381(a) transaction as though the distribution or transfer had not occurred.

(ii) *Example.* The following example illustrates the rules of this paragraph (e)(3):

Example. The acquiring corporation, X Corporation, previously elected to amortize bond premium under section 171. X Corporation acquires the assets of T Corporation in a transaction to which section 381(a) applies. X Corporation determines under the rules of paragraph (c)(1) of this section that X Corporation's method of amortizing bond premium is the principal method. After the date of distribution or transfer, X Corporation is not required to renew its bond premium amortization election and is bound by it. Additionally, X Corporation would not be required to renew its election to amortize bond premium if the method were the carryover method under paragraph (a)(2) of this section.

(4) *Appropriate times for certain determinations*—(i) *Determining the method of accounting.* The method of accounting used by a party to a section 381(a) transaction on the date of distribution or transfer is the method of accounting used by that party as of the end of the day that is immediately prior to the date of distribution or transfer.

(ii) *Determining whether there are separate and distinct trades or businesses after the date of distribution or transfer.* Whether an acquiring corporation will operate the trades or businesses of the parties to a section 381(a) transaction as separate and distinct trades or businesses after the date of distribution or transfer will be determined as of the date of distribution or transfer based upon the facts and circumstances. Intent to combine books and records of the trades or businesses may be demonstrated by contemporaneous records and documents or by other objective evidence that reflects the acquiring corporation's ultimate plan of operation, even though the actual combination of the books and records may extend beyond the end of the taxable year that includes the date of distribution or transfer.

(5) *Representative period for aggregating gross receipts.* The representative period for measuring gross receipts is generally the 12 consecutive months preceding the date of distribution or transfer. If a component trade or business was not in existence for the 12 consecutive months preceding the date of distribution or transfer, then all component trades or businesses of each integrated trade or business will compare their gross receipts for the period that such trade or business was in existence. For example, if the acquiring corporation's component trade or business was formed in August and the date of distribution or transfer occurred in December of the same year, the gross receipts for those five months will be compared with the gross receipts of the other component trades or businesses for the same period.

(6) *Establishing a method of accounting.* A method of accounting used by the distributor or transferor corporation immediately prior to the date of distribution or transfer that continues to be used by the acquiring corporation after the date of distribution or transfer is an established method of accounting for purposes of section 446(e), whether or not such method is proper or is permitted under the Internal Revenue Code or any applicable Income Tax Regulations.

(7) *Other applicable provisions.* This section does not preempt any other provision of the Internal Revenue Code or the Income Tax Regulations that is applicable to the acquiring corporation's circumstances. For example, income, deductions, credits, allowances, and exclusions may be allocated among the parties to a section 381(a) transaction and other taxpayers under sections 269 and 482, if appropriate. Similarly, transfers of contracts accounted for using a long-term contract method of accounting are governed by the rules provided in § 1.460–4(k). Further, if other paragraphs of section 381(c) apply for purposes of determining the methods of accounting to be used following the date of distribution or transfer, section 381(c)(4) and this § 1.381(c)(4)–1 will not apply to the tax treatment of the items. For example, this section does not apply to inventories that an acquiring corporation obtains in a transaction to which section 381(a) applies. Instead, the rules of section 381(c)(5) govern the inventory method to be used by the acquiring corporation after the distribution or transfer. Similarly, if the acquiring corporation assumes an obligation of the distributor or transferor corporation that gives rise to a liability after the date of distribution or transfer and to which § 1.381(c)(16)–1 applies, the deductibility of the item is determined under this section only after the rules of section 381(c)(16) are applied.

(8) *Character of items of income and deduction.* After the date of distribution or transfer, items of income and deduction have the same character in the hands of the acquiring corporation as they would have had in the hands of the distributor or transferor corporation if no distribution or transfer had occurred.

(9) *Method of accounting selected by project or job.* If other sections of the Internal Revenue Code, Income Tax Regulations, or other administrative guidance permit an acquiring corporation to elect a method of accounting on a project-by-project, job-by-job, or other similar basis, then for purposes of this section the method elected with respect to each project or job is the established method only for that project or job. For example, the election under section 460 to classify a contract to perform both manufacturing and construction activities as a long-term construction contract if at least 95 percent of the estimated total allocable contract costs are reasonably allocated to the construction activities is made on a contract-by-contract basis. Accordingly, the method of accounting previously elected for a project or job generally continues after the date of distribution or transfer. However, if the trades or businesses of the parties to a section 381(a) transaction are not operated as separate and distinct trades or businesses after the date of distribution or transfer, and two or more of the parties to the section 381(a) transaction previously worked on the same project or job and used different

methods of accounting for the project or job immediately before the distribution or transfer, then the acquiring corporation must determine the principal method for that project or job under paragraph (c) of this section and make changes, if necessary, to the principal method in accordance with paragraph (d)(1) of this section.

(10) *Impermissible method of accounting.* This section does not limit the Commissioner's ability under section 446(b) to determine whether a taxpayer's method of accounting is an impermissible method or otherwise fails to clearly reflect income. For example, an acquiring corporation may not use the method of accounting determined under paragraph (a)(2) of this section if the method fails to clearly reflect the acquiring corporation's income within the meaning of section 446(b).

(f) *Effective/applicability date.* This section applies to corporate reorganizations and tax-free liquidations described in section 381(a) that occur on or after August 31, 2011.

■ **Par. 4.** Section 1.381(c)(5)–1 is revised to read as follows:

§ 1.381(c)(5)–1 Inventory method.

(a) *Introduction*—(1) *Purpose.* This section provides guidance regarding the inventory method an acquiring corporation must use following a distribution or transfer to which sections 381(a) and 381(c)(5) apply and how to implement any associated change in method of accounting. See § 1.381(c)(4)–1 for guidance regarding the method of accounting or combination of methods (other than inventory and depreciation methods) an acquiring corporation must use following a distribution or transfer to which sections 381(a) and 381(c)(4) apply. See § 1.381(c)(6)–1 for guidance regarding the depreciation method an acquiring corporation must use following a distribution or transfer to which sections 381(a) and 381(c)(6) apply.

(2) *Carryover method requirement for separate and distinct trades or businesses.* In a transaction to which section 381(a) applies, if an acquiring corporation continues to operate a trade or business of the parties to the section 381(a) transaction as a separate and distinct trade or business after the date of distribution or transfer, the acquiring corporation must use a carryover method as defined in paragraph (b)(4) of this section for each continuing trade or business, unless either the carryover method is impermissible and must be changed under paragraph (a)(4) of this section or the acquiring corporation changes the carryover method in accordance with paragraph (a)(5) of this section. The acquiring corporation need not secure the Commissioner's consent to continue a carryover method.

(3) *Principal method requirement for trades or businesses not operated as separate and distinct trades or businesses.* In a transaction to which section 381(a) applies, if an acquiring corporation does not operate the trades or businesses of the parties to the section 381(a) transaction as separate and distinct trades or businesses after the date of distribution or transfer, the acquiring corporation must use a principal method determined under paragraph (c) of this section, unless either the principal method is impermissible and must be changed under paragraph (a)(4) of this section or the acquiring corporation changes the principal method in accordance with paragraph (a)(5) of this section. The acquiring corporation must change to a principal method in accordance with paragraph (d)(1) of this section for each integrated trade or business and need not secure the Commissioner's consent to use a principal method.

(4) *Carryover method or principal method not a permissible method.* If a carryover method or principal method is not a permissible inventory method, the acquiring corporation must secure the Commissioner's consent to change to a permissible inventory method as provided in paragraph (d)(2) of this section. If the acquiring corporation must use a single inventory method for a particular type of goods after the date of distribution or transfer regardless of the number of separate and distinct trades or businesses operated on that date, the acquiring corporation must use the principal method for that type of goods as determined under paragraph (c) of this section, unless either the principal method is impermissible and must be changed under this paragraph (a)(4) or the acquiring corporation changes the principal method in accordance with paragraph (a)(5) of this section.

(5) *Voluntary change.* Any party to a section 381(a) transaction may request permission under section 446(e) to change an inventory method for the taxable year in which the transaction occurs or is expected to occur. For trades or businesses that will not operate as separate and distinct trades or businesses after the date of distribution or transfer, a change in method of accounting for the taxable year that includes that date will be granted only if the requested inventory method is the method that the acquiring corporation must use after the date of distribution or transfer. The time and manner of obtaining the Commissioner's consent to change to a different inventory method is described in paragraph (d)(2) of this section.

(6) *Examples.* The following examples illustrate the rules of this paragraph (a). Unless otherwise noted, the carryover method is a permissible inventory method.

Example (1). *Carryover method for separate and distinct trades or businesses after the date of distribution or transfer*—(i) *Facts.* X Corporation manufactures radios and television sets. X Corporation uses the first-in, first-out (FIFO) method of inventory identification, the cost method of valuing its inventories, and capitalizes inventory costs in accordance with section 263A. T Corporation manufactures washing machines and dryers. T Corporation uses the last-in, first-out (LIFO) method of inventory identification, the cost method of valuing its inventories, and capitalizes inventory costs under section 263A using methods other than those used by X Corporation. X Corporation acquires the inventory of T Corporation in a transaction to which section 381(a) applies. After the date of distribution or transfer, X Corporation operates its radio and television manufacturing business as a trade or business that is separate and distinct from its washing machines and dryers manufacturing business.

(ii) *Conclusion.* Because after the date of distribution or transfer X Corporation operates its manufacturing businesses as separate and distinct trades or businesses, under paragraph (a)(2) of this section X Corporation must use the carryover methods for each continuing trade or business, unless either the carryover methods are impermissible and must be changed under paragraph (a)(4) of this section or X Corporation changes the carryover methods in accordance with paragraph (a)(5) of this section. As defined in paragraph (b)(4) of this section, the carryover methods for the radios and television sets manufacturing business are the FIFO method, the cost basis of valuation, and X Corporation's methods of accounting for section 263A costs immediately prior to the date of distribution or transfer. The carryover methods for the washing machines and dryers manufacturing business are the LIFO method, the cost basis of valuation, and T Corporation's methods of accounting for section 263A costs immediately prior to the date of distribution or transfer. There is no change in method of accounting, and X Corporation need not secure the Commissioner's consent to use any carryover method.

Example (2). *Carryover method not permissible*—(i) *Facts.* X Corporation manufactures food and beverages and uses the FIFO method of inventory identification, the cost method of valuing its inventories, and capitalizes costs in accordance with section 263A. T Corporation sells sporting equipment. T Corporation uses the FIFO method of inventory identification and the cost method of valuing its inventories. T Corporation does not capitalize costs under section 263A because it meets the small reseller exception under section 263A. X

Corporation acquires the inventory of T Corporation in a transaction to which section 381(a) applies. After the date of distribution or transfer, X Corporation operates the food and beverages business as a trade or business that is separate and distinct from the sporting equipment business, and X Corporation does not qualify for the small reseller exception under section 263A for its sporting equipment business.

(ii) *Conclusion.* Because after the date of distribution or transfer X Corporation operates the food and beverages business as a separate and distinct trade or business, under paragraph (a)(2) of this section X Corporation must use the carryover methods for each continuing trade or business, unless either the carryover methods are impermissible and must be changed under paragraph (a)(4) of this section or X Corporation changes the carryover methods in accordance with paragraph (a)(5) of this section. As defined in paragraph (b)(4) of this section, the carryover methods for the food and beverages business are the FIFO method, the cost basis of valuation, and X Corporation's methods of capitalizing costs under section 263A immediately prior to the date of distribution or transfer. The carryover methods for the sporting equipment business are the FIFO method and the cost basis of valuation. There is no change in method of accounting, and X Corporation need not secure the Commissioner's consent to use any carryover method. However, because X Corporation does not qualify for the small reseller exception under section 263A for its sporting equipment business, X Corporation's method of not capitalizing additional section 263A costs is an impermissible carryover method under paragraph (a)(4) of this section. X Corporation must secure the Commissioner's consent to change to a permissible method of capitalizing costs under section 263A for the sporting equipment business as provided in paragraph (d)(2) of this section.

(b) *Definitions.* (1) *Inventory method.* An inventory method is a method of accounting used to account for merchandise on hand (including finished goods, work in process, and raw materials) at the beginning of a year for purposes of computing taxable income for that year. The term includes not only the method for identifying inventory, for example, the FIFO inventory method or the LIFO inventory method, but also all other methods necessary to account for merchandise.

(2) *Adoption of a method of accounting.* Adoption of a method of accounting has the same meaning as provided in § 1.446–1(e)(1).

(3) *Change in method of accounting.* A change in method of accounting has the same meaning as provided in § 1.446–1(e)(2).

(4) *Carryover method.* A carryover method is an inventory method that each party to a section 381(a) transaction uses for each separate and distinct trade or business immediately prior to the date of distribution or transfer.

(5) *Principal method.* A principal method is an inventory method that is determined under paragraph (c) of this section.

(6) *Permissible method of accounting.* A permissible method of accounting is a method of accounting that is proper or permitted under the Internal Revenue Code or any applicable Income Tax Regulations.

(7) *Acquiring corporation.* An acquiring corporation has the same meaning as provided in § 1.381(a)–1(b)(2).

(8) *Distributor corporation.* A distributor corporation means the corporation, foreign or domestic, that distributes its assets to another corporation described in section 332(b) in a distribution to which section 332 (relating to liquidations of subsidiaries) applies.

(9) *Transferor corporation.* A transferor corporation means the corporation, foreign or domestic, that transfers its assets to another corporation in a transfer to which section 361 (relating to nonrecognition of gain or loss to corporations) applies, but only if—

(i) The transfer is in connection with a reorganization described in section 368(a)(1)(A), (a)(1)(C), or (a)(1)(F), or

(ii) The transfer is in connection with a reorganization described in section 368(a)(1)(D) or (a)(1)(G), provided the requirements of section 354(b) are met.

(10) *Parties to the section 381(a) transaction.* Parties to the section 381(a) transaction means the acquiring corporation and the distributor or transferor corporation that participate in a transaction to which section 381(a) applies.

(11) *Date of distribution or transfer.* The date of distribution or transfer has the same meaning as provided in section 381(b)(2) and § 1.381(b)–1(b).

(12) *Separate and distinct trades or businesses.* Separate and distinct trades or businesses has the same meaning as provided in § 1.446–1(d).

(13) *Audit protection.* Audit protection means, for purposes of paragraph (d)(1) of this section, that the IRS will not require an acquiring corporation that is required to change a method of accounting under paragraph (a)(3) of this section to change that method for a taxable year ending prior to the taxable year that includes the date of distribution or transfer.

(14) *Section 481(a) adjustment.* The section 481(a) adjustment means an adjustment that must be taken into account as required under section 481(a) to prevent amounts from being duplicated or omitted when the taxable income of an acquiring corporation is computed under a method of accounting different from the method used to compute taxable income for the preceding taxable year.

(15) *Cut-off basis.* A cut-off basis means a manner in which a change in method of accounting is made without a section 481(a) adjustment and under which only the items arising after the beginning of the year of change (or, in the case of a change made under paragraph (d)(1) of this section, after the date of distribution or transfer) are accounted for under the new method of accounting. When it implements the change on a cut-off basis, a taxpayer using the LIFO inventory method to identify its inventory goods that makes a change in method of accounting within the LIFO inventory method from one LIFO method or sub-method to another LIFO method or sub-method uses the new LIFO inventory method to determine its current-year cost and base-year cost of ending inventories for the year of change, but does not recompute the cost of beginning inventories for the year of change using the new LIFO inventory method.

(16) *Adjustment period.* The adjustment period means the number of taxable years for taking into account the section 481(a) adjustment required as a result of a change in method of accounting.

(17) *Component trade or business.* A component trade or business is a trade or business of a party to the section 381(a) transaction that will be combined and integrated with a trade or business of the other party to the section 381 transaction. See paragraph (e)(7)(ii) of this section for the determination of whether a trade or business is operated as a separate and distinct trade or business after the date of distribution or transfer.

(c) *Principal method*—(1) *In general.* For each integrated trade or business, the principal method for a particular type of goods is generally the inventory method used by the component trade or business of the acquiring corporation immediately prior to the date of distribution or transfer for that type of goods. If, however, on the date of distribution or transfer the component trade or business of the distributor or transferor corporation holds more inventory of a type of goods than the component trade or business of the acquiring corporation, the principal method for such goods is the inventory method used by the component trade or business of the distributor or transferor corporation immediately prior to that date. For each integrated trade or

business, the component trade or business of the distributor or transferor corporation holds more inventory if, for a particular type of goods, the aggregate of the fair market value of the goods held by each component trade or business of the distributor or transferor corporation exceeds the aggregate of the fair market value of the goods held by each component trade or business of the acquiring corporation immediately prior to the date of distribution or transfer. Alternatively, as a simplifying convention, the acquiring corporation may elect to apply the preceding sentence to the aggregate fair market value of the entire inventories, held by each component trade or business of the acquiring corporation and each component trade or business of the distributor or transferor corporation, that will be integrated after the date of distribution or transfer. If the component trade or business with the larger aggregate fair market value of the entire inventories does not have an inventory method for a particular type of goods immediately prior to the date of distribution or transfer, the principal method for that type of goods is the inventory method used by the component trade or business that does have an inventory method for that type of goods.

(2) *Multiple component trades or businesses with different principal methods.* If a party to the section 381(a) transaction has multiple component trades or businesses and more than one principal inventory method for a particular type of goods, then the acquiring corporation may choose which of the inventory methods used by such component trades or businesses will be the principal method of the integrated trade or business. The acquiring corporation must choose a principal method that is a permissible method of accounting. In general, a change to a principal method in a transaction to which section 381(a) and paragraph (a)(3) of this section apply is made under paragraph (d)(1) of this section.

(3) *Examples.* The following examples illustrate the rules of this paragraph (c). Unless otherwise noted, the principal method is a permissible inventory method.

Example (1). *Principal methods are the methods used by the acquiring corporation*—(i) *Facts.* X Corporation and T Corporation each manufacture tennis equipment. X Corporation's manufacturing business uses the FIFO method of inventory identification, the cost method of valuing inventories, and allocates indirect costs to the property produced using the burden rate method provided in § 1.263A–1(f)(3)(i). T Corporation's manufacturing business uses the LIFO method of inventory identification, the cost method of valuing its inventories, and allocates indirect costs to the property it produces using the standard cost method provided in § 1.263A–1(f)(3)(ii). X Corporation acquires the inventory of T Corporation in a transaction to which section 381(a) applies. The fair market value of each particular type of goods held by X Corporation's manufacturing business immediately prior to the date of distribution or transfer exceeds the fair market value of each particular type of goods held by T Corporation's manufacturing business on that date. After the date of distribution or transfer, X Corporation will not operate its manufacturing business as a trade or business that is separate and distinct from T Corporation's manufacturing business.

(ii) *Conclusion.* Because after the date of distribution or transfer X Corporation will not operate its manufacturing business as a separate and distinct trade or business, X Corporation must use the principal methods under paragraph (a)(3) of this section, unless either the principal methods are impermissible and must be changed under paragraph (a)(4) of this section or X Corporation changes the principal methods in accordance with paragraph (a)(5) of this section. The fair market value of each particular type of goods held by T Corporation's manufacturing business immediately prior to the date of distribution or transfer does not exceed the fair market value of each particular type of goods held by X Corporation's manufacturing business on that date. Because on the date of distribution or transfer T Corporation's manufacturing business does not hold more inventory than X Corporation's manufacturing business, the principal methods are the FIFO method of inventory identification, the cost method of valuation, and X Corporation's method of allocating indirect costs under section 263A using the burden rate method. X Corporation need not secure the Commissioner's consent to use these methods. However, in accordance with paragraph (d)(1) of this section, X Corporation must change the inventory methods for the manufacturing business acquired from T Corporation to the principal methods.

Example (2). *Principal methods are the methods used by the acquiring corporation*—(i) *Facts.* The facts are the same as in *Example* (1), except that the fair market value of each particular type of goods held by X Corporation's manufacturing business immediately prior to the date of distribution or transfer is identical to the fair market value of each particular type of goods held by T Corporation's manufacturing business on that date.

(ii) *Conclusion.* The result is the same as in *Example* (1). The principal methods are the FIFO method of inventory identification, the cost method of valuation, and X Corporation's method of allocating indirect costs under section 263A using the burden rate method. X Corporation need not secure the Commissioner's consent to use the principal methods. However, in accordance with paragraph (d)(1) of this section, X Corporation must change the inventory methods for the manufacturing business acquired from T Corporation to the principal methods.

Example (3). *Principal methods are the methods used by the distributor or transferor corporation*—(i) *Facts.* The facts are the same as in *Example* (1), except that the fair market value of each particular type of goods held by T Corporation's manufacturing business immediately prior to the date of distribution or transfer exceeds the fair market value of each particular type of goods held by X Corporation's manufacturing business on that date.

(ii) *Conclusion.* Because after the date of distribution or transfer X Corporation will not operate its manufacturing business as a separate and distinct trade or business, X Corporation must use the principal methods under paragraph (a)(3) of this section, unless either the principal methods are impermissible and must be changed under paragraph (a)(4) of this section or X Corporation changes the principal methods in accordance with paragraph (a)(5) of this section. The fair market value of each particular type of goods held by T Corporation's manufacturing business immediately prior to the date of distribution or transfer exceeds the fair market value of each particular type of goods held by X Corporation's manufacturing business on that date. Because on the date of distribution or transfer T Corporation's manufacturing business holds more inventory than X Corporation's manufacturing business, the principal methods are the LIFO method of inventory identification, the cost method of valuation, and T Corporation's method of allocating indirect costs under section 263A using the standard cost method. X Corporation need not secure the Commissioner's consent to use the principal methods. However, in accordance with paragraph (d)(1) of this section, X Corporation must change the inventory methods for the manufacturing business operated by X Corporation prior to the date of distribution or transfer to the principal methods.

Example (4). *Voluntary change allowable*—(i) *Facts.* The facts are the same as in *Example* (1), except that T Corporation wants to discontinue using the LIFO method for its manufacturing business and change to the FIFO method for the taxable year in which the section 381(a) transaction occurs or is expected to occur.

(ii) *Conclusion.* Under paragraph (a)(5) of this section, the Commissioner will grant a request to change a method of accounting for the taxable year that includes the date of distribution or transfer only if the requested method is the method that the acquiring corporation must use after the date of distribution or transfer. The Commissioner will consent to a request by T Corporation to change to the FIFO method for the taxable year in which the section 381(a) transaction occurs or is expected to occur because X Corporation will use this method after the date of distribution or transfer.

Example (5). *Principal method determination when larger component trade or business does not have a method of*

accounting for a particular type of goods—(i) *Facts.* The facts are the same as in *Example* (1), except that T Corporation's manufacturing business has a particular type of goods that is not held by X Corporation's manufacturing business.

(ii) *Conclusion.* The result is similar to *Example* (1). In general, the principal methods are the FIFO method of inventory identification, the cost method of valuation, and X Corporation's method of allocating indirect costs to the property produced using the burden rate method. X Corporation need not secure the Commissioner's consent to use the principal methods. However, in accordance with paragraph (d)(1) of this section, X Corporation must change the inventory methods for the manufacturing business acquired from T Corporation to the principal methods. Under paragraph (c) of this section, the principal methods for the particular type of goods held only by T Corporation's manufacturing business are the LIFO method of inventory identification, the cost method of valuation, and T Corporation's method of allocating indirect costs to the property it produces using the standard cost method. X Corporation must determine whether the principal methods for the type of goods previously held by T Corporation are permissible given that such methods are different than the principal methods that must be used by X for all other goods. If X Corporation's use of the standard cost method would be impermissible after the date of distribution or transfer, X Corporation must change to a permissible method under section 263A for those goods in accordance with paragraph (a)(4) of this section.

Example (6). *Inventory convention elected*—(i) *Facts.* X Corporation manufactures planes and T Corporation manufactures planes and communications satellites. X Corporation's manufacturing business uses the FIFO method of inventory identification and values its inventories at cost or market, whichever is lower, while T Corporation's manufacturing business uses the LIFO method of inventory identification and values its inventories at cost. X Corporation's manufacturing business and T Corporation's manufacturing business, use the same methods to capitalize costs under section 263A. X Corporation acquires the inventory of T Corporation in a transaction to which section 381(a) applies. In lieu of determining the fair market value of each particular type of goods held on the date of distribution or transfer, X Corporation elects to value the entire inventories of its manufacturing business and the entire inventories of T Corporation's manufacturing business in accordance with paragraph (c)(1) of this section. The fair market value of the inventory held by T Corporation's manufacturing business immediately prior to the date of distribution or transfer does not exceed the fair market value of the inventory held by X Corporation's manufacturing business on that date. After the date of distribution or transfer, X Corporation will not operate its manufacturing business as a trade or business that is separate and distinct from T Corporation's manufacturing business.

(ii) *Conclusion.* Because after the date of distribution or transfer X Corporation will not operate its manufacturing business as a separate and distinct trade or business, X Corporation must use the principal methods under paragraph (a)(3) of this section, unless either the principal methods are impermissible and must be changed under paragraph (a)(4) of this section or X Corporation changes the principal methods in accordance with paragraph (a)(5) of this section. The fair market value of the entire inventory held by T Corporation's manufacturing business immediately prior to the date of distribution or transfer does not exceed the fair market value of the entire inventory of X Corporation's manufacturing business on that date. Because on the date of distribution or transfer T Corporation's manufacturing business does not hold more inventory than X Corporation's manufacturing business, the principal methods are the FIFO method, the cost or market, whichever is lower, method of valuation, and X Corporation's method of capitalizing costs under section 263A on the date of distribution or transfer. X Corporation need not secure the Commissioner's consent to use the principal methods. However, in accordance with paragraph (d)(1) of this section, X Corporation must change the inventory methods for the manufacturing business acquired from T Corporation to the principal methods.

Example (7). *Principal method determination with a combined trade or business and a separate and distinct trade or business*—(i) *Facts.* X Corporation manufactures tennis equipment in a trade or business that is separate and distinct from its trade or business of manufacturing golf equipment. X Corporation uses the FIFO method of inventory identification for its tennis equipment and the LIFO method of inventory identification for its golf equipment. X Corporation values the goods in both inventories at cost and allocates indirect costs to the property produced using the burden rate method provided in § 1.263A–1(f)(3)(i). T Corporation manufactures tennis equipment. T Corporation's manufacturing business uses the FIFO method of inventory identification, values inventories at cost, and allocates indirect costs to the property it produces using the standard cost method provided in § 1.263A–1(f)(3)(ii). X Corporation acquires the inventory of T Corporation in a transaction to which section 381(a) applies. Immediately prior to the date of distribution or transfer, the fair market value of T Corporation's inventories in the tennis equipment manufacturing business exceeds the fair market value of the inventories held by X Corporation's tennis equipment manufacturing business. After the date of distribution or transfer, X Corporation will not operate its tennis equipment manufacturing business as a trade or business that is separate and distinct from T Corporation's tennis equipment manufacturing business, but X Corporation will operate its golf equipment manufacturing business as a trade or business that is separate and distinct from the tennis equipment manufacturing business.

(ii) *Conclusion.* Because after the date of distribution or transfer X Corporation will not operate its tennis equipment manufacturing business as a separate and distinct trade or business, X Corporation must use the principal methods under paragraph (a)(3) of this section, unless either the principal methods are impermissible and must be changed under paragraph (a)(4) of this section or X Corporation changes the principal methods in accordance with paragraph (a)(5) of this section. Under paragraph (c)(1) of this section, X Corporation elects to compare the fair market values of the entire inventories of the component trades or businesses on the date of distribution or transfer to determine whether T Corporation holds more inventory than X Corporation. The fair market value of the inventory held by T Corporation's tennis equipment manufacturing business exceeds the fair market value of the tennis equipment held by X Corporation's tennis equipment manufacturing business. Because on the date of distribution or transfer T Corporation's tennis equipment manufacturing business holds more inventory than X Corporation's tennis equipment manufacturing business, the principal methods for the combined tennis equipment business are the FIFO method of inventory identification, the cost basis of valuation, and T Corporation's methods of allocating indirect costs under section 263A using the standard cost method provided in § 1.263A–1(f)(3)(ii). X Corporation need not secure the Commissioner's consent to use the principal methods. However, in accordance with paragraph (d)(1) of this section, X Corporation must change the methods of accounting for its tennis equipment manufacturing business to the principal methods. Under paragraph (a)(2) of this section, because X Corporation will operate the golf equipment manufacturing business as a separate trade or business, for the inventories held by the golf equipment manufacturing business X Corporation must continue to use the LIFO method of inventory identification, use the cost basis of valuation, and allocate indirect costs under section 263A using the burden rate method provided in § 1.263A–1(f)(3)(i). There are no changes in method of accounting for the golf manufacturing business, and X Corporation need not secure the Commissioner's consent to use these carryover methods.

Example (8). *Principal method determination with multiple component trades or businesses*—(i) *Facts.* The facts are the same as in *Example* (7), except that after the date of distribution or transfer X Corporation will not operate the golf equipment manufacturing business as a trade or business that is separate and distinct from the tennis equipment manufacturing business. In addition, the fair market value of the inventories of X Corporation's tennis equipment manufacturing business and golf equipment manufacturing business, in the aggregate, exceed the fair market value of the inventories of T Corporation's tennis equipment manufacturing business.

(ii) *Conclusion.* Because on the date of distribution or transfer T Corporation's tennis equipment manufacturing business does not

hold more inventory than X Corporation's tennis equipment manufacturing business and golf equipment manufacturing business, in the aggregate, the principal method for identifying inventory is the method used by X Corporation's component trade or business on the date of distribution or transfer. However, because on the date of distribution or transfer X Corporation operates two separate and distinct trades or businesses with different inventory identification methods that will be combined after the date of distribution or transfer, X Corporation may choose under paragraph (c)(2) of this section which method used by its component trades or businesses will be the principal method. After the date of distribution or transfer, X Corporation may use either the FIFO method of inventory identification used by the tennis equipment manufacturing business or the LIFO method of inventory identification used by the golf equipment manufacturing business as the principal method of identification, if either method is a permissible method. For the integrated trade or business, X Corporation will use the cost method of valuation and allocate indirect costs under section 263A using the burden rate method provided in § 1.263A–1(f)(3)(i). In accordance with paragraph (d)(1) of this section, X Corporation must change the inventory methods of T Corporation's manufacturing business to the principal methods. Under paragraph (a)(3) of this section, X Corporation also must change either its golf equipment manufacturing business or its tennis equipment manufacturing business, depending on which principal method X Corporation selects, to the principal method.

(d) *Procedures for changing a method of accounting*—(1) *Change made to principal method under paragraph (a)(3) of this section*—(i) *Section 481(a) adjustment*—(A) *In general.* An acquiring corporation that changes its method of accounting or the distributor or transferor corporation's method of accounting under paragraph (a)(3) of this section does not need to secure the Commissioner's consent to use a principal method. To the extent the use of a principal method constitutes a change in method of accounting, the change in method is treated as a change initiated by the acquiring corporation for purposes of section 481(a)(2). Any change to a principal method, whether the change relates to a trade or business of the acquiring corporation or a trade or business of the distributor or transferor corporation, must be reflected on the acquiring corporation's federal income tax return for the taxable year that includes the date of distribution or transfer. The amount of the section 481(a) adjustment and the adjustment period, if any, necessary to implement a change to the principal method are determined under § 1.446–1(e) and the applicable administrative procedures that govern voluntary changes in methods of accounting under section 446(e). If the Internal Revenue Code, the Income Tax Regulations, or administrative procedures require that a method of accounting be implemented on a cut-off basis, the acquiring corporation must implement the change, on a cut-off basis as of the date of distribution or transfer, on its federal income tax return for the taxable year that includes the date of distribution or transfer. If the Internal Revenue Code, the Income Tax Regulations, or administrative procedures require a section 481(a) adjustment, the acquiring corporation must determine the section 481(a) adjustment and include the appropriate amount of the section 481(a) adjustment on its federal income tax return for the taxable year that includes the date of distribution or transfer and subsequent taxable year(s), as necessary. This adjustment is determined by the acquiring corporation as of the beginning of the day that is immediately after the date of distribution or transfer.

(B) *Example.* The following example illustrates the rules of this paragraph (d)(1)(i):

Example. X Corporation uses the FIFO method of inventory identification, and T Corporation uses the LIFO method of inventory identification. X Corporation acquires the inventory of T Corporation in a transaction to which section 381(a) applies. X Corporation determines that under the rules of paragraph (c)(1) of this section, X Corporation must change the inventory method for the business acquired from T Corporation to the FIFO method. X Corporation will determine the section 481(a) adjustment pertaining to the change to the FIFO method (whether the amounts thereof represent increases or decreases in income) as of the beginning of the day that immediately follows the day on which X Corporation acquires the inventory of T Corporation. X Corporation will reflect this adjustment, or an appropriate part thereof, on its federal income tax return for the taxable year that includes the date of distribution or transfer.

(ii) *Audit protection.* Notwithstanding any other provision in any other Income Tax Regulation or administrative procedure, no audit protection is provided for any change in method of accounting under paragraph (d)(1) of this section.

(iii) *Other terms and conditions.* Except as otherwise provided in this section, other terms and conditions provided in § 1.446–1(e) and the applicable administrative procedures for voluntary changes in method of accounting under section 446(e) apply to a change in method of accounting under this section. Thus, for example, if the administrative procedures for a particular change in method of accounting have a term and condition that provides for the acceleration of the section 481(a) adjustment period, this term and condition applies to a change made under this paragraph (d)(1). However, any scope limitation in the applicable administrative procedures will not apply for purposes of making a change under this paragraph (d)(1). For example, if the administrative procedures provide as a limitation that an identical change in method of accounting is barred for a period of years, this limitation will not bar a change to the principal method made under this section.

(2) *Change made to a method of accounting under paragraph (a)(4) or (a)(5) of this section*—(i) *In general.* A party to a section 381(a) transaction that changes a method of accounting under either paragraph (a)(4) or paragraph (a)(5) of this section must follow the provisions of § 1.446–(1)(e) and the applicable administrative procedures, including scope limitations, for voluntary changes in method of accounting under section 446(e), except as provided in paragraphs (d)(2)(ii) and (d)(2)(iii) of this section. An application on Form 3115, ''Application for Change in Accounting Method,'' filed with the IRS to change a method of accounting under this paragraph (d)(2) should be labeled ''Filed under section 381(c)(5)'' at the top.

(ii) *Final year limitation.* Any scope limitation relating to the final year of a trade or business will not apply to a taxpayer that changes its method of accounting in the final year of a trade or business that is terminated as the result of a section 381(a) transaction.

(iii) *Time to file.* Under the authority of § 1.446–1(e)(3)(ii), for a change in method of accounting requiring advance consent, the application for a change in method of accounting (for example, Form 3115), must be filed with the IRS on or before the later of—

(A) The due date for filing a Form 3115 as specified in § 1.446–1(e), for example, the last day of the taxable year in which the distribution or transfer occurred, or

(B) The earlier of—

(*1*) The day that is 180 days after the date of distribution or transfer, or

(*2*) The day on which the acquiring corporation files its federal income tax return for the taxable year in which the distribution or transfer occurred.

(e) *Rules and procedures*—(1) *Inventory method selected for a particular type of goods.* If other sections of the Internal Revenue Code or Income Tax Regulations allow a taxpayer to elect an inventory method for a particular type of goods, the

method elected with respect to those goods is the established inventory method only for those goods. For example, an election to use the LIFO inventory method to identify specified goods in inventory, such as certain products in finished goods, is the inventory method only for those products.

(2) *No method of accounting.* If a party to a section 381(a) transaction is not using an inventory method, does not have an inventory method for a particular type of goods, or came into existence as a result of the transaction, the party will not be treated as having an inventory method different from that used by another party to the section 381(a) transaction.

(3) *Elections and adoptions allowed.* If an election does not require the Commissioner's consent, an acquiring corporation or a distributor or transferor corporation is not precluded from making any election that is otherwise permissible for the taxable year that includes the date of distribution or transfer. For example, an acquiring corporation may elect to identify its inventory using the LIFO inventory method in the year of the distribution or transfer. For purposes of this section, a corporation shall be deemed as having made any election as of the first day of the taxable year that includes the date of distribution or transfer. Similarly, where adoption is permissible, an acquiring corporation or a distributor or transferor corporation may adopt any permissible method of accounting for the taxable year that includes the date of distribution or transfer.

(4) *Elections continue after section 381(a) transaction*—(i) *General rule.* An acquiring corporation is not required to renew any election not requiring renewal and previously made by it or by a distributor or transferor corporation for a carryover method or a principal method if the acquiring corporation uses the method after the section 381(a) transaction. If the acquiring corporation uses a method after the date of distribution or transfer, an election made by the acquiring corporation or by a distributor or transferor corporation for that method that was in effect on the date of distribution or transfer continues after the section 381(a) transaction as though the distribution or transfer had not occurred.

(ii) *Example.* The following example illustrates the rules of paragraph (e)(4):

Example. Since its incorporation in 1982, X Corporation elected to use the LIFO inventory method under section 472 to identify its inventory of tennis balls. Since its incorporation in 2002, T Corporation elected to use the FIFO inventory method to identify its inventory of tennis balls. X Corporation acquires the assets of T Corporation in a transaction to which section 381(a) applies. Immediately prior to the date of distribution or transfer, the fair market value of X Corporation's inventory in its tennis balls exceeds the fair market value of the tennis balls inventory held by T Corporation. After the date of distribution or transfer, X Corporation will not operate its business as a trade or business that is separate and distinct from T Corporation's business. Because on the date of distribution or transfer T Corporation does not hold more inventory than X Corporation, the principal method for identifying inventory is the method used by X Corporation on the date of distribution or transfer. After the date of distribution or transfer, X Corporation need not renew its election to identify inventory using the LIFO inventory method, and X Corporation is bound by the election.

(5) *Adopting the LIFO inventory method.* A party to a section 381(a) transaction will be deemed to be using the LIFO inventory method for a particular type of goods on the date of distribution or transfer if that party elects under section 472 to adopt that inventory method with respect to those goods for its taxable year within which the date of distribution or transfer occurs. See section 472 for the requirements to adopt the LIFO inventory method.

(6) *Inventory layers treatment*—(i) *Adjustments required after a section 381(a) transaction.* An acquiring corporation that determines the principal method of taking an inventory after a section 381(a) transaction under paragraphs (a)(3) and (c) of this section after the date of distribution or transfer may need to integrate inventories and make appropriate adjustments as provided in paragraphs (e)(6)(ii) and (e)(6)(iii) of this section.

(ii) *LIFO inventory method used after the section 381(a) transaction*—(A) *LIFO inventory method used by the acquiring corporation and the distributor or transferor corporation*—(*1*) *Principal method is the dollar-value LIFO method.* If, under paragraphs (a)(3) and (c) of this section, the acquiring corporation changes its inventory method or the inventory method of the distributor or transferor corporation from the specific goods LIFO method of pricing inventories to the dollar-value LIFO method of pricing inventories (dollar-value LIFO method) for a particular type of goods, the inventory accounted for under the specific goods method shall be placed on the dollar-value method as provided in § 1.472–8(f), and then the inventory shall be integrated with the inventory previously accounted for under the dollar-value LIFO method. If pools of each corporation are permitted or required to be combined, the pools must be combined as provided in § 1.472–8(g)(2). For purposes of combining pools, all base year inventories or layers of increment that occur in taxable years including the same December 31 shall be combined. A base year inventory or layer of increment occurring in any short taxable year of a distributor or transferor corporation shall be merged with and considered a layer of increment of its immediately preceding taxable year.

(*2*) *Principal method is the specific goods LIFO method.* If, under paragraphs (a)(3) and (c) of this section, the acquiring corporation changes its inventory method or the inventory method of the distributor or transferor corporation from the dollar-value LIFO method of pricing inventories to the specific goods LIFO method of pricing inventories, the acquiring corporation shall treat the inventory being changed to the specific goods LIFO method as having the same acquisition dates and costs as such inventory had under the dollar-value LIFO method.

(B) *Change from the FIFO inventory method to either the specific goods LIFO method or the dollar-value LIFO method.* If, under paragraphs (a)(3) and (c) of this section, the acquiring corporation changes its inventory method or the inventory method of the distributor or transferor corporation from the FIFO inventory method to either the specific goods LIFO method or the dollar-value method of pricing LIFO inventories, the inventory accounted for under the FIFO inventory method shall be treated by the acquiring corporation as having been acquired at their average unit cost in a single transaction on the date of the distribution or transfer. Thus, if an inventory of a particular type of goods is combined in an existing dollar-value pool, the goods shall be treated as if they were purchased by the acquiring corporation at the average unit cost on the date of the distribution or transfer with respect to such pool. Alternatively, if the goods are not combined in an existing pool, the goods will be treated as if they were purchased by the acquiring corporation at the average unit cost on the date of the distribution or transfer with respect to a new pool, with the base-year being the year of the section 381(a) transaction. Adjustments resulting from a restoration to cost of any write-down to market value of the inventories shall be taken into account by the acquiring corporation ratably in each of the three taxable years beginning with the taxable year that includes the

date of the distribution or transfer. See section 472(d).

(iii) *FIFO inventory method used after the section 381(a) transaction*—(A) *FIFO inventory method used by the acquiring corporation and the distributor or transferor corporation.* If, under paragraphs (a)(3) and (c) of this section, the FIFO inventory method is the principal method and the component trades or businesses of both the acquiring corporation and the distributor or transferor corporation use the FIFO method immediately prior to the distribution or transfer, the acquiring corporation must treat the inventory that must change to the principal method as having the same acquisition dates and costs as such inventory had immediately prior to the date of distribution or transfer. However, if the principal method of valuing inventories is the cost or market, whichever is lower, method, the acquiring corporation must treat the inventories that must change to the principal method as having been acquired at cost or market, whichever is lower.

(B) *Change from either the specific goods LIFO method or the dollar-value LIFO method to the FIFO inventory method.* If, under paragraphs (a)(3) and (c) of this section, the acquiring corporation changes its inventory method or the inventory method of the distributor or transferor corporation from either the specific goods LIFO method or the dollar-value LIFO method to the FIFO inventory method, the acquiring corporation must treat the inventory accounted for under the LIFO method as having the same acquisition dates and costs that the inventory would have had if the FIFO inventory method had been used on the date of distribution or transfer. However, if the principal method of valuing inventories is the cost or market, whichever is lower, method, the acquiring corporation must treat the inventories accounted for under the LIFO method as having been acquired at cost or market, whichever is lower.

(7) *Appropriate times for certain determinations*—(i) *Determining the inventory method.* The inventory method used by a party to a section 381(a) transaction on the date of distribution or transfer is the method used by that party as of the end of the day that is immediately prior to the date of distribution or transfer.

(ii) *Determining whether there are separate and distinct trades or businesses after the date of distribution or transfer.* Whether an acquiring corporation will operate the trades or businesses of the parties to a section 381(a) transaction as separate and distinct trades or businesses after the date of distribution or transfer will be determined as of the date of distribution or transfer based upon the facts and circumstances. Intent to combine books and records of the trades or businesses may be demonstrated by contemporaneous records and documents or by other objective evidence that reflects the acquiring corporation's ultimate plan of operation, even though the actual combination of the books and records may extend beyond the end of the taxable year that includes the date of distribution or transfer.

(8) *Establishing an inventory method.* An inventory method used by the distributor or transferor corporation immediately prior to the date of distribution or transfer that continues to be used by the acquiring corporation after the date of distribution or transfer is an established method of accounting for purposes of section 446(e), whether or not such method is proper or is permitted under the Internal Revenue Code or any applicable Income Tax Regulations.

(9) *Other applicable provisions.* This section does not preempt any other provision of the Internal Revenue Code or the Income Tax Regulations that is applicable to the acquiring corporation's circumstances. Section 381(c)(5) and this § 1.381(c)(5)–1 determine only the inventory method to be used after a section 381(a) transaction. If other paragraphs of section 381(c) apply for purposes of determining the methods of accounting to be used following the date of distribution or transfer, section 381(c)(5) and this § 1.381(c)(5)–1 will not apply to the tax treatment of the items. Specifically, section 381(c)(5) and this § 1.381(c)(5)–1 do not apply to assets other than inventory that an acquiring corporation obtains in a transaction to which section 381(a) applies.

(10) *Use of the cash receipts and disbursements method of accounting.* If immediately prior to the date of distribution or transfer, an acquiring corporation or a distributor or transferor corporation uses the cash receipts and disbursements method of accounting within the meaning of section 446(c)(1) and § 1.446–1(c)(1)(i), or is not required to use an inventory method for its goods, section 381(c)(5) and § 1.381(c)(5)–1 do not apply. Instead, section 381(c)(4) and § 1.381(c)(4)–1 must be applied to determine the methods of accounting that continue after the transaction.

(11) *Character of items of income and deduction.* After the date of distribution or transfer, items of income and deduction have the same character in the hands of the acquiring corporation as they would have had in the hands of the distributor or transferor corporation if no distribution or transfer had occurred.

(12) *Impermissible inventory method.* This section does not limit the Commissioner's ability under section 446(b) to determine whether a taxpayer's inventory method is an impermissible method or otherwise fails to clearly reflect income. For example, an acquiring corporation may not use the method of accounting determined under paragraph (a)(2) of this section if the method fails to clearly reflect the acquiring corporation's income within the meaning of section 446(b).

(f) *Effective/applicability date.* This section applies to corporate reorganizations and tax-free liquidations described in section 381(a) that occur on or after August 31, 2011.

■ **Par. 5.** Section 1.446–1 is amended by:

■ 1. Revising the first sentence and adding a second new sentence in paragraph (e)(3)(i).

■ 2. Revising the first sentence in paragraph (e)(4)(i).

■ 3. Adding paragraph (e)(4)(iii).

The revisions and addition read as follows:

§ 1.446–1 General rule for methods of accounting.

* * * * *

(e) * * *

(3)(i) Except as otherwise provided under the authority of paragraph (e)(3)(ii) of this section, to secure the Commissioner's consent to a taxpayer's change in method of accounting the taxpayer generally must file an application on Form 3115, ''Application for Change in Accounting Method,'' with the Commissioner during the taxable year in which the taxpayer desires to make the change in method of accounting. See §§ 1.381(c)(4)–1(d)(2) and 1.381(c)(5)–1(d)(2) for rules allowing additional time, in some circumstances, for the filing of an application on Form 3115 with respect to a transaction to which section 381(a) applies. * * *

* * * * *

(4) * * * (i) * * * Except as provided in paragraphs (e)(3)(iii), (e)(4)(ii), and (e)(4)(iii) of this section, paragraph (e) of this section applies on or after December 30, 2003. * * *

* * * * *

(iii) *Effective/applicability date for paragraph (e)(3)(i).* The rules of paragraph (e)(3)(i) of this section apply

to corporate reorganizations and tax-free liquidations described in section 381(a) that occur on or after August 31, 2011.

Approved: July 20, 2011.

Steven T. Miller,

Deputy Commissioner for Services and Enforcement.

Emily S. McMahon,

Acting Assistant Secretary of the Treasury (Tax Policy).

[FR Doc. 2011–19256 Filed 7–29–11; 8:45 am]

BILLING CODE 4830–01–P

DEPARTMENT OF THE TREASURY

Financial Crimes Enforcement Network

31 CFR Part 1010

RIN 1506–AA82

Financial Crimes Enforcement Network; Repeal of the Final Rule and Withdrawal of the Finding of Primary Money Laundering Concern Against VEF Banka

AGENCY: Financial Crimes Enforcement Network (''FinCEN''), Treasury.

ACTION: Final rule.

SUMMARY: This document repeals FinCEN's final rule, ''Imposition of Special Measure Against VEF Banka'' of July 13, 2006, and withdraws the finding of VEF Banka as a Financial Institution of Primary Money Laundering Concern of April 26, 2005, issued pursuant to 31 U.S.C. 5318A of the Bank Secrecy Act (the ''BSA'').

DATES: *Effective Date:* August 1, 2011.

FOR FURTHER INFORMATION CONTACT: Regulatory Policy and Programs Division, Financial Crimes Enforcement Network, (800) 949–2732 and select Option 1.

SUPPLEMENTARY INFORMATION:

I. Background

A. Statutory Provisions

On October 26, 2001, the President signed into law the Uniting and Strengthening America by Providing Appropriate Tools Required to Intercept and Obstruct Terrorism Act of 2001, Public Law 107–56 (''USA PATRIOT Act''). Title III of the USA PATRIOT Act amends the anti-money laundering provisions of the BSA, codified at 12 U.S.C. 1829b, 12 U.S.C. 1951–1959, and 31 U.S.C. 5311–5314 and 5316–5332, to promote the prevention, detection, and prosecution of money laundering and the financing of terrorism. Regulations implementing the BSA appear at 31 CFR Chapter X.[1] The authority of the Secretary of the Treasury (the ''Secretary'') to administer the BSA and its implementing regulations has been delegated to the Director of the Financial Crimes Enforcement Network.[2]

Section 311 of the USA PATRIOT Act (''section 311'') added Section 5318A to the BSA, granting the Secretary the authority, upon finding that reasonable grounds exist for concluding that a foreign jurisdiction, foreign financial institution, class of international transactions, or type of account is of ''primary money laundering concern,'' to require domestic financial institutions and domestic financial agencies to take certain ''special measures'' against the primary money laundering concern.[3]

Taken as a whole, Section 5318A provides the Secretary with a range of options that can be adapted to target specific money laundering and terrorist financing concerns most effectively. These options provide the authority to bring additional and useful pressure on those jurisdictions and institutions that pose money-laundering threats and the ability to take steps to protect the U.S. financial system. Through the imposition of various special measures, FinCEN can: gain more information about the concerned jurisdictions, financial institutions, transactions, and accounts; monitor more effectively the respective jurisdictions, financial institutions, transactions, and accounts; and, ultimately, protect U.S. financial institutions from involvement with jurisdictions, financial institutions, transactions, or accounts that pose a money laundering concern.

B. VEF Banka

At the time of issuance of the final rule on July 13, 2006, VEF Banka was headquartered in Riga, Latvia. VEF Banka was one of the smallest of Latvia's 23 banks, and, in 2004, was reported to have approximately $80 million in assets and 87 employees. Total assets for the bank, as of June 30, 2005, were 27.3 million LATS, equivalent to approximately $47.4 million. VEF Banka had one subsidiary, Veiksmes līzings, which offered financial leasing and factoring services. In addition to its headquarters in Riga, VEF Banka had one branch in Riga and one representative office in the Czech Republic. VEF Banka offered corporate and private banking services, issued credit cards for non-Latvians, and provided currency exchange through Internet banking services (i.e., virtual currencies). In addition, according to its financial statements, VEF Banka maintained correspondent accounts in countries worldwide, but reported none in the United States at the time of the final rule.

II. The Finding, Final Rule, and Subsequent Developments

A. The Finding and Final Rule

Based upon review and analysis of relevant information, consultations with relevant Federal agencies and departments, and after consideration of the factors enumerated in section 311, the Secretary, through his delegate, the Director of FinCEN, found that reasonable grounds existed for concluding that VEF Banka was a financial institution of primary money laundering concern. This finding was published on April 26, 2005,[4] in a notice of proposed rulemaking which proposed prohibiting covered financial institutions from, directly or indirectly, opening or maintaining correspondent accounts in the United States for VEF Banka or any of its branches, offices, or subsidiaries, pursuant to the authority under 31 U.S.C. 5318A. The notice of proposed rulemaking outlined the various factors supporting the finding and proposed prohibition.

After consulting with required Federal agencies and parties, reviewing public comments received from the April 26, 2005 notice of proposed rulemaking, and considering additional relevant factors, FinCEN issued a final rule on July 13, 2006 that imposed the special measure authorized under 31 U.S.C. 5318A(b)(5) against VEF Banka.[5] This final rule requires covered financial institutions to terminate any correspondent or payable-through

[1] On October 26, 2010, FinCEN issued a final rule creating a new Chapter X in Title 31 of the Code of Federal Regulations for the BSA regulations. See 75 FR 65806 (October 26, 2010) (Transfer and Reorganization of Bank Secrecy Act Regulations Final Rule) (referred to herein as the ''Chapter X Final Rule''). The Chapter X Final Rule became effective on March 1, 2011.

[2] Therefore, references to the authority of the Secretary under section 311 of the USA PATRIOT Act apply equally to the Director of the Financial Crimes Enforcement Network.

[3] Available special measures include requiring: (1) Recordkeeping and reporting of certain financial transactions; (2) collection of information relating to beneficial ownership; (3) collection of information relating to certain payable-through accounts; (4) collection of information relating to certain correspondent accounts; and (5) prohibition or conditions on the opening or maintaining of correspondent or payable-through accounts. 31 U.S.C. 5318A(b)(1)–(5). For a complete discussion of the range of possible countermeasures, see 68 FR 18917 (April 17, 2003) (proposing to impose special measures against Nauru).

[4] *See* 70 FR 21369 (April 26, 2005, RIN 1506–AA82).

[5] *See* 71 FR 39554 (July 13, 2006, RIN 1506–AA82).

accounts for, or on behalf of, VEF Banka, and to apply due diligence reasonably designed to guard against indirect use of their correspondent or payable-through accounts by VEF Banka.

B. VEF Banka's Subsequent Developments

On May 26, 2010, VEF Banka's Latvian banking regulator, the Financial and Capital Market Commission (the ''FCMC''), revoked VEF Banka's operating license on the grounds that the shareholders of the bank had not received authorization from the FCMC for the acquisition of qualifying holdings and the bank failed to ensure compliance with provisions of the Credit Institution Law.[6] As a result, the shareholders had no decision-making rights and were unable to ''ensure prudent bank operations.'' The FCMC's decision to revoke VEF Banka's license was confirmed by the Senate of Latvia's Supreme Court on July 22, 2010 and terminated VEF Banka's ability to operate as a financial institution under Latvian law.[7] On November 15, 2010, the Riga District Court issued a non-appealable order to begin liquidating the bank.[8] The liquidation process is expected to be complete in one to two years and will result in the disposition of all of VEF Banka's assets, including its subsidiary, Veiksmes līzings.

III. Withdrawal of the Finding of Primary Money Laundering Concern Against VEF Banka and Repeal of the Final Rule

For the reasons set forth above, FinCEN hereby withdraws the finding of primary money laundering concern against VEF Banka, as published in the **Federal Register** on April 26, 2005 (70 FR 21369) and finalized on July 13, 2006 (71 FR 39554), as of August 1, 2011. As a result, FinCEN is also repealing the final rule, as published in the **Federal Register** on July 13, 2006 (71 FR 39554) as 31 CFR 103.192 (now 31 CFR 1010.654), that was based upon the finding. FinCEN's withdrawal of the finding of primary money laundering concern against VEF Banka and the repeal of the related final rule do not acknowledge any remedial measure taken by VEF Banka, but are the result of the revocation of VEF Banka's Latvian banking license and the non-appealable decision by the Riga District Court to liquidate the bank.[9]

IV. Regulatory Matters

A. Executive Order 12866

It has been determined that this rulemaking is not a significant regulatory action for purposes of Executive Order 12866. Accordingly, a regulatory impact analysis is not required.

B. Unfunded Mandates Reform Act of 1995

Section 202 of the Unfunded Mandates Reform Act of 1995 (''Unfunded Mandates Act''), Public Law 104–4 (March 22, 1995), requires that an agency prepare a budgetary impact statement before promulgating a rule that may result in expenditure by state, local, and tribal governments, in the aggregate, or by the private sector, of $100 million or more in any one year. If a budgetary impact statement is required, section 202 of the Unfunded Mandates Act also requires an agency to identify and consider a reasonable number of regulatory alternatives before promulgating a rule. FinCEN has determined that it is not required to prepare a written statement under Section 202 and has concluded that on balance the rule provides the most cost-effective and least burdensome alternative to achieve the objectives of the rule.

C. Regulatory Flexibility Act

Pursuant to the Regulatory Flexibility Act (RFA) (5 U.S.C. 601 *et seq.*), FinCEN certifies that this final regulation likely will not have a significant economic impact on a substantial number of small entities. The regulatory changes in this final rule merely remove the current obligations for financial institutions under 31 CFR 103.192 (now 31 CFR 1010.654).

D. Paperwork Reduction Act

This regulation discontinues the Office of Management and Budget Control Number 1506–0041 assigned to the final rule and, as a result, reduces the estimated average burden of one hour per affected financial institution, totaling 5,000 hours. This regulation contains no new information collection requirements subject to review and approval by the Office of Management and Budget under the Paperwork Reduction Act of 1995 (44 U.S.C. 3507(d) *et seq.*).

List of Subjects in 31 CFR Part 1010

Administrative practice and procedure, Banks, banking, Brokers, Currency, Foreign banking, Foreign currencies, Gambling, Investigations, Penalties, Reporting and recordkeeping requirements, Securities, Terrorism.

Authority and Issuance

For the reasons set forth above, 31 CFR part 1010 is amended as follows:

PART 1010—GENERAL PROVISIONS

■ 1. The authority citation for 31 CFR part 1010 continues to read as follows:

Authority: 12 U.S.C. 1829b and 1951–1959; 31 U.S.C. 5311–5314 and 5316–5332; title III, sec. 314, Pub. L. 107–56, 115 Stat. 307.

§ 1010.654 [Removed]

■ 2. Part 1010 is amended by removing § 1010.654.

Dated: July 22, 2011.

James H. Freis, Jr.,

Director, Financial Crimes Enforcement Network.

[FR Doc. 2011–19118 Filed 7–29–11; 8:45 am]

BILLING CODE 4810–02–P

DEPARTMENT OF HOMELAND SECURITY

Coast Guard

33 CFR Part 117

[Docket No. USCG–2010–1117]

RIN 1625–AA09

Drawbridge Operation Regulation; Raritan River, Arthur Kill and Their Tributaries, Staten Island, NY and Elizabeth, NJ

AGENCY: Coast Guard, DHS.

ACTION: Final rule.

SUMMARY: The Coast Guard has changed the drawbridge operation regulations that govern the operation of the Arthur Kill (AK) Railroad Bridge at mile 11.6, across Arthur Kill between Staten Island, New York and Elizabeth, New Jersey. This final rule provides relief to the bridge owner from crewing their bridge by allowing the bridge to be

[6] ''On Withdrawal of the JSC 'VEF Banka's' Operating Licence,'' Financial Capital Market Commission press release, May 26, 2010 (*http://www.fktk.lv/en/publications/press_releases/2010-05-29_on_withdrawal_of_the_jsc/*)

[7] ''VEF Bank Loses License,'' The Baltic Times, July 28, 2010 (*http://www.baltictimes.com/news/articles/26661/*).

[8] ''Court Rule for Liquidation of VEF Banka,'' The Baltic Course, November 16, 2010 (*http://www.baltic-course.com/eng/finances/?doc=33962&underline=vef+banka*).

[9] The ''Republic of Latvia'' was described at length in the April 26, 2005 notice of proposed rulemaking, 70 FR 21369, and July 13, 2006 final rule, 71 FR 39554. Today's repeal of the final rule and withdrawal of the finding of primary money laundering concern against VEF Banka do not provide updates on jurisdictional developments. Further discussion of jurisdictional developments can be found at the U.S. Department of State's ''2011 International Narcotics Control Strategy Report'' (*http://www.state.gov/p/inl/rls/nrcrpt/2011/vol2/156375.htm#latvia*).

operated from a remote location while continuing to meet the present and future needs of navigation.

DATES: This rule is effective August 31, 2011.

ADDRESSES: Comments and related materials received from the public, as well as documents mentioned in this preamble as being available in the docket, are part of docket USCG–2010–1117 and are available online by going to *http://www.regulations.gov,* inserting USCG–2010–1117 in the ''Keyword'' box, and then clicking ''Search.'' This material is also available for inspection or copying at the Docket Management Facility (M–30), U.S. Department of Transportation, West Building Ground Floor, Room W12–140, 1200 New Jersey Avenue, SE., Washington, DC 20590, between 9 a.m. and 5 p.m., Monday through Friday, except Federal holidays.

FOR FURTHER INFORMATION CONTACT: If you have questions on this rule, call or e-mail Mr. Joe Arca, Project Officer, First Coast Guard District Bridge Branch, 212–668–7165, *joe.m.arca@uscg.mil.* If you have questions on viewing the docket, call Renee V. Wright, Program Manager, Docket Operations, telephone 202–366–9826.

SUPPLEMENTARY INFORMATION:

Regulatory Information

On March 25, 2011, we published a notice of proposed rulemaking (NPRM) entitled Drawbridge Operation Regulations Raritan River, Arthur Kill and their tributaries, in the **Federal Register** (76 FR 16715). We received one comment in response to the proposed rule. No public meeting was requested, and none was held.

Basis and Purpose

The Arthur Kill (AK) Railroad Bridge at mile 11.6, across Arthur Kill, has a vertical clearance of 31 feet at mean high water, and 35 feet at mean low water in the closed position. The existing drawbridge operating regulations are listed at 33 CFR 117.702.

Beginning in 2009, Consolidated Rail Corporation (Conrail) conducted a year of successful remote operation tests of the AK Railroad Bridge without any objections from marine users. A draw operator was on scene at all times to ensure compliance with drawbridge operating regulations cited above. In September 2010, Conrail formally requested that the drawbridge operating regulation be revised to permit remote operation of the AK Railroad Bridge.

Conrail, on October 20, 2010 and at the request of the Coast Guard, presented its proposal to remotely operate the bridge to the New York Harbor Operations Committee. Discussions between Conrail, the Coast Guard, and the New York Harbor Operations Committee ensued with no objections to the remote operation raised by the committee members.

Discussion of Comments and Changes

The Coast Guard received one comment in response to the notice of proposed rulemaking.

A comment letter was received from the Tug and Barge Committee of the Port of New York/New Jersey in opposition to operating the AK Bridge from a remote location. They stated that without bridge control and crewing on scene, the safe transport of products by the marine industry would be at risk if the remote control malfunctioned.

The AK Bridge is normally maintained in the full open position except for the passage of rail traffic which occurs approximately four times each day.

Should the remote operation fail a repair crew will be dispatched to the bridge within 45 minutes of the reported failure to repair the bridge.

Prior to publishing the notice of proposed rulemaking, the Coast Guard had discussions with the New York Harbor Operations Committee and Conrail. No objections to the remote operation were voiced at that time.

Subsequently, the remote operation was then successfully tested for a year with a draw tender present at all times. During the one year test period there were no failures or complaints received from mariners.

Based on the successful testing of the remote operation system, the Coast Guard believes that operating the AK Bridge remotely should safely meet the present and future needs of navigation. Should the remote operation fail a repair crew will be dispatched to the bridge within 45 minutes of the reported failure to repair the bridge.

As a result, no changes have been made to this final rule as far as the remote operation is concerned.

In drafting this final rule we noted a typographical error that was made in our notice of proposed rulemaking in the Basis and Background Section. We stated that the existing regulations were listed at 33 CFR 117.72, which was in error. The existing regulations are listed at 33 CFR 117.702. We corrected that error in this final rule.

Regulatory Analyses

We developed this rule after considering numerous statutes and executive orders related to rulemaking. Below we summarize our analyses based on 13 of these statutes or executive orders.

Regulatory Planning and Review

This rule is not a significant regulatory action under section 3(f) of Executive Order 12866, Regulatory Planning and Review, as supplemented by Executive Order 13563, Improving Regulation and Regulatory Review, and does not require an assessment of potential costs and benefits under section 6(a)(3) of that Order. The Office of Management and Budget has not reviewed it under that Order. This conclusion is based on the fact that the bridge will continue to operate according to the existing regulations except that it will be controlled from either a remote location or locally.

Small Entities

Under the Regulatory Flexibility Act (5 U.S.C. 601–612), we have considered whether this rule would have a significant economic impact on a substantial number of small entities. The term ''small entities'' comprises small businesses, not-for-profit organizations that are independently owned and operated and are not dominant in their fields, and governmental jurisdictions with populations of less than 50,000.

The Coast Guard certifies under 5 U.S.C. 605(b) that this rule will not have a significant economic impact on a substantial number of small entities. This action will not have a significant economic impact on a substantial number of small entities for the following reason. The bridge will continue to operate according to existing regulations except that it will be controlled from either a remote location or locally.

Assistance for Small Entities

Under section 213(a) of the Small Business Regulatory Enforcement Fairness Act of 1996 (Pub. L. 104–121), in the NPRM we offered to assist small entities in understanding the rule so that they could better evaluate its effects on them and participate in the rulemaking process.

Collection of Information

This rule calls for no new collection of information under the Paperwork Reduction Act of 1995 (44 U.S.C. 3501–3520).

Federalism

A rule has implications for federalism under Executive Order 13132, Federalism, if it has a substantial direct effect on State or local governments and would either preempt State law or

impose a substantial direct cost of compliance on them. We have analyzed this rule under that Order and have determined that it does not have implications for federalism.

Unfunded Mandates Reform Act

The Unfunded Mandates Reform Act of 1995 (2 U.S.C. 1531–1538) requires Federal agencies to assess the effects of their discretionary regulatory actions. In particular, the Act addresses actions that may result in the expenditure by a State, local, or tribal government, in the aggregate, or by the private sector of $100,000,000 (adjusted for inflation) or more in any one year. Though this rule will not result in such an expenditure, we do discuss the effects of this rule elsewhere in this preamble.

Taking of Private Property

This rule will not cause a taking of private property or otherwise have taking implications under Executive Order 12630, Governmental Actions and Interference with Constitutionally Protected Property Rights.

Civil Justice Reform

This rule meets applicable standards in sections 3(a) and 3(b)(2) of Executive Order 12988, Civil Justice Reform, to minimize litigation, eliminate ambiguity, and reduce burden.

Protection of Children

We have analyzed this rule under Executive Order 13045, Protection of Children from Environmental Health Risks and Safety Risks. This rule is not an economically significant rule and would not create an environmental risk to health or risk to safety that might disproportionately affect children.

Indian Tribal Governments

This rule does not have tribal implications under Executive Order 13175, Consultation and Coordination with Indian Tribal Governments, because it does not have a substantial direct effect on one or more Indian tribes, on the relationship between the Federal Government and Indian tribes, or on the distribution of power and responsibilities between the Federal Government and Indian tribes.

Energy Effects

We have analyzed this rule under Executive Order 13211, Actions Concerning Regulations That Significantly Affect Energy Supply, Distribution, or Use. We have determined that it is not a ''significant energy action'' under that order because it is not a ''significant regulatory action'' under Executive Order 12866 and is not likely to have a significant adverse effect on the supply, distribution, or use of energy. The Administrator of the Office of Information and Regulatory Affairs has not designated it as a significant energy action. Therefore, it does not require a Statement of Energy Effects under Executive Order 13211.

Technical Standards

The National Technology Transfer and Advancement Act (NTTAA) (15 U.S.C. 272 note) directs agencies to use voluntary consensus standards in their regulatory activities unless the agency provides Congress, through the Office of Management and Budget, with an explanation of why using these standards would be inconsistent with applicable law or otherwise impractical. Voluntary consensus standards are technical standards (e.g., specifications of materials, performance, design, or operation; test methods; sampling procedures; and related management systems practices) that are developed or adopted by voluntary consensus standards bodies.

This rule does not use technical standards. Therefore, we did not consider the use of voluntary consensus standards.

Environment

We have analyzed this rule under Department of Homeland Security Management Directive 023–01 and Commandant Instruction M16475.lD, which guides the Coast Guard in complying with the National Environmental Policy Act of 1969 (NEPA) (42 U.S.C. 4321–4370f), and have concluded that this action is one of a category of actions which do not individually or cumulatively have a significant effect on the human environment. This rule is related to the promulgation of operating regulations or procedures for drawbridges and therefore is categorically excluded, under figure 2–1, paragraph (32)(e), of the Instruction. Under figure 2–1, paragraph (32)(e), of the Instruction, an environmental analysis checklist and a categorical exclusion determination are not required for this rule.

List of Subjects in 33 CFR Part 117

Bridges.

For the reasons discussed in the preamble, the Coast Guard amends 33 CFR part 117 as follows:

PART 117—DRAWBRIDGE OPERATION REGULATIONS

■ 1. The authority citation for part 117 continues to read as follows:

Authority: 33 U.S.C. 499; 33 CFR 1.05–1; Department of Homeland Security Delegation No. 0170.1.

■ 2. Revise § 117.702 to read as follows:

§ 117.702 Arthur Kill.

(a) The draw of the Arthur Kill (AK) Railroad Bridge shall be maintained in the full open position for navigation at all times, except during periods when it is closed for the passage of rail traffic.

(b) The bridge owner/operator shall maintain a dedicated telephone hot line for vessel operators to call the bridge in advance to coordinate anticipated bridge closures. The telephone hot line number shall be posted on signs at the bridge clearly visible from both the up and downstream sides of the bridge.

(c) Tide constrained deep draft vessels shall notify the bridge operator, daily, of their expected times of vessel transits through the bridge, by calling the designated telephone hot line.

(d) The bridge shall not be closed for the passage of rail traffic during any predicted high tide period if a tide constrained deep draft vessel has provided the bridge operator with an advance notice of their intent to transit through the bridge. For the purposes of this regulation, the predicted high tide period shall be considered to be from two hours before each predicted high tide to a half-hour after each predicted high tide taken at the Battery, New York.

(e) The bridge operator shall issue a manual broadcast notice to mariners of the intent to close the bridge for a period of up to 30 minutes for the passage of rail traffic, on VHF–FM channels 13 and 16 (minimum range of 15 miles) 90 minutes before and again at 75 minutes before each bridge closure.

(f) Beginning at 60 minutes prior to each bridge closure, automated or manual broadcast notice to mariners must be repeated at 15 minute intervals and again at 10 and 5 minutes prior to each bridge closure and once again as the bridge begins to close, at which point the appropriate sound signal will be given.

(g) Two 15 minute bridge closures may be provided each day for the passage of multiple rail traffic movements across the bridge. Each 15 minute bridge closure shall be separated by at least a 30 minute period when the bridge is returned to and remains in the full open position. Notification of the two 15 minute closures shall follow the same procedures outlined in paragraphs (e) and (f) above.

(h) A vessel operator may request up to a 30 minute delay for any bridge closure in order to allow vessel traffic to

meet tide or current requirements; however, the request to delay the bridge closure must be made within 30 minutes following the initial broadcast for the bridge closure. Requests received after the initial 30 minute broadcast will not be granted.

(i) In the event of a bridge operational failure, the bridge operator shall immediately notify the Coast Guard Captain of the Port New York. The bridge owner/operator must provide and dispatch a bridge repair crew to be on scene at the bridge no later than 45 minutes after the bridge fails to operate. A repair crew must remain on scene during the operational failure until the bridge has been fully restored to normal operations or until the bridge is raised and locked in the fully open position.

(j) When the bridge is not tended locally it must be operated from a remote location. A sufficient number of closed circuit TV cameras, approved by the Coast Guard, shall be operated and maintained at the bridge site to enable the remotely located bridge tender to have full view of both river traffic and the bridge.

(k) VHF–FM channels 13 and 16 shall be maintained and monitored to facilitate communication in both the remote and local control locations. The bridge shall also be equipped with directional microphones and horns to receive and deliver signals to vessels.

(l) Whenever the remote control system equipment is disabled or fails to operate for any reason, the bridge operator shall immediately notify the Captain of the Port New York. The bridge shall be physically tended and operated by local control as soon as possible, but no more than 45 minutes after malfunction or disability of the remote system.

(m) Mechanical bypass and override capability of the remote operation system shall be provided and maintained at all times.

Dated: July 6, 2011.

James B. McPherson,

Captain, U.S. Coast Guard, Acting Commander, First Coast Guard District.

[FR Doc. 2011–19322 Filed 7–29–11; 8:45 am]

BILLING CODE 9110–04–P

DEPARTMENT OF HOMELAND SECURITY

Coast Guard

33 CFR Part 165

[Docket No. USCG–2011–0567]

RIN 1625–AA00

Safety Zone; San Diego POPS Fireworks, San Diego, CA

AGENCY: Coast Guard, DHS.

ACTION: Temporary final rule.

SUMMARY: The Coast Guard is establishing a temporary safety zone on the navigable waters of San Diego Bay in support of the San Diego POPS Fireworks. This safety zone is necessary to provide for the safety of the participants, crew, spectators, participating vessels, and other vessels and users of the waterway during scheduled fireworks events. Persons and vessels will be prohibited from entering into, transiting through, or anchoring within this safety zone unless authorized by the Captain of the Port or his designated representative.

DATES: *Effective Date:* This rule is effective in the CFR from August 1, 2011 until 10 p.m., September 4, 2011. This rule is effective with actual notice for purposes of enforcement beginning 9 p.m. July 1, 2011.

ADDRESSES: Documents indicated in this preamble as being available in the docket are part of docket USCG–2011–0567 and are available online by going to *http://www.regulations.gov,* inserting USCG–2011–0567 in the ''Keyword'' box, and then clicking ''Search.'' They are also available for inspection or copying at the Docket Management Facility (M–30), U.S. Department of Transportation, West Building Ground Floor, Room W12–140, 1200 New Jersey Avenue, SE., Washington, DC 20590, between 9 a.m. and 5 p.m., Monday through Friday, except Federal holidays.

FOR FURTHER INFORMATION CONTACT: If you have questions on this temporary rule, call or e-mail Petty Officer Shane Jackson, Waterways Management, U.S. Coast Guard Sector San Diego, CA; telephone (619) 278–7262, e-mail *Shane.E.Jakcson@uscg.mil.* If you have questions on viewing the docket, call Renee V. Wright, Program Manager, Docket Operations, telephone 202–366–9826.

SUPPLEMENTARY INFORMATION:

Regulatory Information

The Coast Guard is issuing this temporary final rule without prior notice and opportunity to comment pursuant to authority under section 4(a) of the Administrative Procedure Act (APA) (5 U.S.C. 553(b)). This provision authorizes an agency to issue a rule without prior notice and opportunity to comment when the agency for good cause finds that those procedures are ''impracticable, unnecessary, or contrary to the public interest.'' Under 5 U.S.C. 553(b)(B), the Coast Guard finds that good cause exists for not publishing a notice of proposed rulemaking (NPRM) with respect to this rule because immediate action is necessary to ensure the safety of vessels, spectators, participants, and others in the vicinity of the marine event on the dates and times this rule will be in effect and delay would be impracticable.

Under 5 U.S.C. 553(d)(3), the Coast Guard finds that good cause exists for making this rule effective less than 30 days after publication in the Federal Register because delaying the effective date would be impracticable, since immediate action is needed to ensure the public's safety.

Basis and Purpose

The San Diego Symphony Orchestra and Copley Symphony Hall are sponsoring the San Diego POPS Fireworks, which will include a fireworks presentation conducted from a barge in San Diego Bay. The barge will be located near the navigational channel in the vicinity of North Embarcadero. The temporary safety zone will be a 400-foot radius around the firing barge. The sponsor will provide a chase boat to patrol the safety zone and inform vessels of the safety zone. This temporary safety zone is necessary to provide for the safety of the crew, spectators, and other vessels and users of the waterway.

Discussion of Rule

The Coast Guard is establishing a temporary safety zone that will be enforced from 9 p.m. to 10 p.m. on the following dates: July 1–3, July 8–9, July 15–16, July 22–23, July 29–30, August 5–6, August 12–13, August 19–20, August 26–27, and September 2–4, 2011. The limits of the safety zone will be a 400-foot radius around the anchored firing barge in approximate position 32°42.13′ N, 117°10.01′ W.

The temporary safety zone is necessary to provide for the safety of the crews, spectators, and other vessels and users of the waterway. Persons and vessels will be prohibited from entering into, transiting through, or anchoring within the safety zone unless authorized by the Captain of the Port, or his designated representative.

Regulatory Analyses

We developed this rule after considering numerous statutes and executive orders related to rulemaking. Below we summarize our analyses based on 13 of these statutes and executive orders.

Regulatory Planning and Review

This rule is not a significant regulatory action under section 3(f) of Executive Order 12866, Regulatory Planning and Review, and does not require an assessment of potential costs and benefits under section 6(a)(3) of that Order. The Office of Management and Budget has not reviewed it under that Order.

We expect the economic impact of this proposed rule to be so minimal that a full Regulatory Evaluation is unnecessary.

This determination is based on the limited duration and size and location of the safety zone. Recreational vessels will not be allowed to transit through the designated safety zone during the specified times. Vessels may transit through the safety zone with permission from the Captain of the Port San Diego or designated representative.

Small Entities

Under the Regulatory Flexibility Act (5 U.S.C. 601–612), we have considered whether this rule would have a significant economic impact on a substantial number of small entities. The term ''small entities'' comprises small businesses, not-for-profit organizations that are independently owned and operated and are not dominant in their fields, and governmental jurisdictions with populations of less than 50,000.

The Coast Guard certifies under 5 U.S.C. 605(b) that this rule will not have a significant economic impact on a substantial number of small entities. This rule may affect the following entities, some of which may be small entities: The owners or operators of vessels intending to transit or anchor in the specified waters of San Diego Bay within the safety zone.

This rule will not have a significant economic impact on a substantial number of small entities for the following reasons. Vessel traffic can pass safely around the safety zone. Before the effective period, the Coast Guard will publish a local notice to mariners (LNM) and will issue broadcast notice to mariners (BNM) alerts via marine channel 16 VHF before the safety zone is enforced.

Assistance for Small Entities

Under section 213(a) of the Small Business Regulatory Enforcement Fairness Act of 1996 (Pub. L. 104–121), we offer to assist small entities in understanding the rule so that they can better evaluate its effects on them and participate in the rulemaking process.

Small businesses may send comments on the actions of Federal employees who enforce, or otherwise determine compliance with, Federal regulations to the Small Business and Agriculture Regulatory Enforcement Ombudsman and the Regional Small Business Regulatory Fairness Boards. The Ombudsman evaluates these actions annually and rates each agency's responsiveness to small business. If you wish to comment on actions by employees of the Coast Guard, call 1–888–REG–FAIR (1–888–734–3247). The Coast Guard will not retaliate against small entities that question or complain about this rule or any policy or action of the Coast Guard.

Collection of Information

This rule calls for no new collection of information under the Paperwork Reduction Act of 1995 (44 U.S.C. 3501–3520).

Federalism

A rule has implications for federalism under Executive Order 13132, Federalism, if it has a substantial direct effect on State or local governments and would either preempt State law or impose a substantial direct cost of compliance on them. We have analyzed this rule under that Order and have determined that it does not have implications for federalism.

Unfunded Mandates Reform Act

The Unfunded Mandates Reform Act of 1995 (2 U.S.C. 1531–1538) requires Federal agencies to assess the effects of their discretionary regulatory actions. In particular, the Act addresses actions that may result in the expenditure by a State, local, or tribal government, in the aggregate, or by the private sector of $100,000,000 (adjusted for inflation) or more in any one year. Though this rule will not result in such an expenditure, we do discuss the effects of this rule elsewhere in this preamble.

Taking of Private Property

This rule will not cause a taking of private property or otherwise have taking implications under Executive Order 12630, Governmental Actions and Interference with Constitutionally Protected Property Rights.

Civil Justice Reform

This rule meets applicable standards in sections 3(a) and 3(b)(2) of Executive Order 12988, Civil Justice Reform, to minimize litigation, eliminate ambiguity, and reduce burden.

Protection of Children

We have analyzed this rule under Executive Order 13045, Protection of Children from Environmental Health Risks and Safety Risks. This rule is not an economically significant rule and does not create an environmental risk to health or risk to safety that may disproportionately affect children.

Indian Tribal Governments

This rule does not have tribal implications under Executive Order 13175, Consultation and Coordination with Indian Tribal Governments, because it does not have a substantial direct effect on one or more Indian tribes, on the relationship between the Federal Government and Indian tribes, or on the distribution of power and responsibilities between the Federal Government and Indian tribes.

Energy Effects

We have analyzed this rule under Executive Order 13211, Actions Concerning Regulations That Significantly Affect Energy Supply, Distribution, or Use. We have determined that it is not a ''significant energy action'' under that order because it is not a ''significant regulatory action'' under Executive Order 12866 and is not likely to have a significant adverse effect on the supply, distribution, or use of energy. The Administrator of the Office of Information and Regulatory Affairs has not designated it as a significant energy action. Therefore, it does not require a Statement of Energy Effects under Executive Order 13211.

Technical Standards

The National Technology Transfer and Advancement Act (NTTAA) (15 U.S.C. 272 note) directs agencies to use voluntary consensus standards in their regulatory activities unless the agency provides Congress, through the Office of Management and Budget, with an explanation of why using these standards would be inconsistent with applicable law or otherwise impractical. Voluntary consensus standards are technical standards (e.g., specifications of materials, performance, design, or operation; test methods; sampling procedures; and related management systems practices) that are developed or adopted by voluntary consensus standards bodies.

This rule does not use technical standards. Therefore, we did not consider the use of voluntary consensus standards.

Environment

We have analyzed this rule under Department of Homeland Security Management Directive 023–01 and Commandant Instruction M16475.lD, which guide the Coast Guard in complying with the National Environmental Policy Act of 1969 (NEPA) (42 U.S.C. 4321–4370f), and have concluded this action is one of a category of actions that do not individually or cumulatively have a significant effect on the human environment. This rule is categorically excluded, under figure 2–1, paragraph (34)(g), of the Instruction. This rule involves the establishment of a temporary safety zone to protect the public from dangers associated with fireworks display. An environmental analysis checklist and a categorical exclusion determination are available in the docket where indicated under **ADDRESSES**.

List of Subjects in 33 CFR Part 165

Harbors, Marine safety, Navigation (water), Reporting and recordkeeping requirements, Security measures, Waterways.

For the reasons discussed in the preamble, the Coast Guard amends 33 CFR part 165 as follows:

PART 165—REGULATED NAVIGATION AREAS AND LIMITED ACCESS AREAS

■ 1. The authority citation for part 165 continues to read as follows:

Authority: 33 U.S.C. 1226, 1231; 46 U.S.C. Chapter 701, 3306, 3703; 50 U.S.C. 191, 195; 33 CFR 1.05–1, 6.04–1, 6.04–6, 160.5; Pub. L. 107–295, 116 Stat. 2064; Department of Homeland Security Delegation No. 0170.1.

■ 2. A new temporary zone § 165.T11–431 to read as follows:

§ 165.T11–431; Safety zone; San Diego POPS Fireworks, San Diego, CA.

(a) *Location.* The limits of the safety zone will be a 400-foot radius around the anchored firing barge in approximate position 32°42.13′ N, 117°10.01′ W.

(b) *Enforcement Period.* This section will be enforced from 9 p.m. to 10 p.m. on the following dates: July 1–3, July 8–9, July 15–16, July 22–23, July 29–30, August 5–6, August 12–13, August 19–20, August 26–27, and September 2–4, 2011.

(c) *Definitions.* The following definition applies to this section: *designated representative* means any commissioned, warrant, or petty officer of the Coast Guard on board a Coast Guard, Coast Guard Auxiliary, or local, state, or federal law enforcement vessel who has been authorized to act on the behalf of the Captain of the Port.

(d) *Regulations.* (1) Entry into, transit through or anchoring within this safety zone is prohibited unless authorized by the Captain of the Port of San Diego or his designated representative on scene.

(2) Mariners requesting permission to transit through the safety zone may request authorization to do so from the Sector San Diego Command Center. The Command Center may be contacted on VHF–FM Channel 16.

(3) All persons and vessels shall comply with the instructions of the Coast Guard Captain of the Port or his designated representative. Upon being hailed by U.S. Coast Guard patrol personnel by siren, radio, flashing light, or other means, the operator of a vessel shall proceed as directed.

(4) The Coast Guard may be assisted by other federal, state, or local agencies.

Dated: June 27, 2011.

T.H. Farris,

Captain, U.S. Coast Guard, Captain of the Port San Diego.

[FR Doc. 2011–19321 Filed 7–29–11; 8:45 am]

BILLING CODE 9110–04–P

LIBRARY OF CONGRESS

Copyright Royalty Board

37 CFR Parts 370 and 382

[Docket No. RM 2011–5]

Notice and Recordkeeping for Use of Sound Recordings Under Statutory License

AGENCY: Copyright Royalty Board, Library of Congress.

ACTION: Final rule.

SUMMARY: The Copyright Royalty Judges are amending their regulations to authorize the use of proxy reports of use to permit distribution of royalties collected for the period April 1, 2004, through December 31, 2009, for the public performance of sound recordings by means of digital audio transmissions pursuant to statutory license. Proxy reports of use will be used for those services for which no reports of use were submitted or for which the reports of use were unusable.

DATES: *Effective Date:* August 31, 2011.

FOR FURTHER INFORMATION CONTACT: Richard Strasser, Senior Attorney, or Gina Giuffreda, Attorney Advisor, by telephone at (202) 707–7658 or e-mail at *crb@loc.gov.*

SUPPLEMENTARY INFORMATION:

Background

Sections 112 and 114 of the Copyright Act, title 17 of the United States Code, are the statutory licenses governing the public performance of sound recordings by certain types of eligible services [1] by means of a digital audio transmission. 17 U.S.C. 112(e), 114. Services operating under these licenses are required to, among other things, pay royalty fees and report to copyright owners of sound recordings on the use of their works. *Id.* The Copyright Act directs the Copyright Royalty Judges (''Judges'') to determine the royalty rates to be paid, 17 U.S.C. 114(f)(1)(A), (f)(2)(A) and 17 U.S.C. 112(e)(3), and to establish regulations to give copyright owners reasonable notice of the use of their works and create and maintain records of use for delivery to copyright owners. 17 U.S.C. 114(f)(4)(A) and 17 U.S.C. 112(e)(4). The purpose of the notice and recordkeeping requirement is to ensure that the royalties collected under the statutory licenses are distributed by a central source—a Collective—or other agents designated to receive royalties from the Collective to the correct recipients. The Judges promulgated final notice and recordkeeping regulations on October 13, 2009.[2] *See* 74 FR 52418.

On March 24, 2011, SoundExchange, Inc., the entity designated by the Judges as the Collective, petitioned the Judges to commence a rulemaking proceeding to consider adopting regulations to authorize SoundExchange ''to use proxy reporting data to distribute to copyright owners and performers certain sound recording royalties for periods before 2010 that are otherwise undistributable due to licensees' failure to provide reports of use'' or their provision of ''reports of use that are so deficient as to be unusable.'' Petition of SoundExchange, Inc., for a Rulemaking to Authorize Use of a Proxy to Distribute Certain Pre-2010 Sound Recordings at 1 and 2 (March 24, 2011). The proxy proposed by SoundExchange uses ''available data for services of the same license type, for the same year.'' *Id* at 9. SoundExchange stated that the proxy would be used to distribute $28 million in royalties, which represents 4.5% of all the royalties collected for the relevant timeframe—April 1, 2004, through December 31, 2009. *Id.* at 2. In

[1] The types of eligible services consist of subscription, nonsubscription, satellite digital audio radio services, and business establishment services.

[2] Until that time, interim regulations were in effect. See 71 FR 59010 (October 6, 2006).

support of its request, SoundExchange noted that a proxy had been utilized once before when the lack of reports of use rendered the reasonable distribution of royalties difficult if not impossible. *Id.* at 3. In that instance, reporting data did not exist for the period from when the statutory licenses first became available for services other than preexisting subscription services (October 1998) to the promulgation of interim notice and recordkeeping regulations (March 2004).[3] *See Notice and Recordkeeping for Use of Sound Recordings Under Statutory License, Docket No. RM 2002–1G, Final rule,* 69 FR 58241. There the proxy data was used to distribute 100% of the royalties collected for that time period. *Id.*

On April 19, 2011, the Judges published a notice of proposed rulemaking (''NPRM'') seeking comment on SoundExchange's proposal. 76 FR 21833. In addition to soliciting comments on the proposal, the Judges invited comment on, among other things, the reasonableness, fairness and appropriateness of the use of the proposed proxy and sought comment on possible alternatives to the proposed proxy. *Id.* at 21834–35 (April 19, 2011). Comments were due May 19, 2011.

The Judges received a single comment from SoundExchange in response to the NPRM. SoundExchange noted that since the filing of its petition, additional reports of use had been provided allowing a further distribution of royalties, thereby reducing the amount of undistributable royalties to $19.4 million, or about 3% of the total royalties collected for the April 1, 2004, to December 31, 2009, period. Comments of SoundExchange, Inc. at 1. In response to the questions posed in the NPRM, SoundExchange reiterated that the proposed proxy would be applied to a much smaller percentage of royalties than the one the Copyright Office approved for the October 1998 to March 2004 period. *See e.g., id.* at 4, 5. SoundExchange also recounted its efforts in arriving at the proposed proxy and noted that it ''has not devised any alternative that would be demonstrably more fair.'' *Id.* at 5.

Given that the proxy will be applied to a small percentage of royalties for the relevant time period and that no viable alternatives have been provided, the Judges are adopting as final the proposed regulations as set forth in the NPRM allowing for the use of the proxy proposed by SoundExchange for the distribution of royalties for the period of April1, 2004, through December 31, 2009. Adoption of the proposed regulations, especially in the absence of opposition to the proposed proxy, will promote the expeditious distribution of the affected royalties.

The Judges also are adopting as final the technical corrections to part 382 proposed by SoundExchange as set forth in the NPRM reflecting the renumbering of certain sections in part 370 resulting from the Judges' adoption of final notice and recordkeeping regulations in October 2009.

List of Subjects

37 CFR Part 370

Copyright, Sound recordings.

37 CFR Part 382

Copyright, Digital audio transmissions, Performance right, Sound recordings.

Final Regulations

For the reasons set forth in the preamble, the Copyright Royalty Judges amend 37 CFR parts 370 and 382 as follows:

PART 370—NOTICE AND RECORDKEEPING REQUIREMENTS FOR STATUTORY LICENSES

■ 1. The authority citation for part 370 continues to read as follows:

Authority: 17 U.S.C. 112(e)(4), 114(f)(4)(A).

■ 2. Section 370.3 is amended by adding new paragraph (i) to read as follows:

§ 370.3 Reports of use of sound recordings under statutory license for preexisting subscription services.

* * * * *

(i) In any case in which a preexisting subscription service has not provided a report of use required under this section for use of sound recordings under section 112(e) or section 114 of title 17 of the United States Code, or both, prior to January 1, 2010, reports of use for the corresponding calendar year filed by other preexisting subscription services shall serve as the reports of use for the non-reporting service, solely for purposes of distribution of any corresponding royalties by the Collective.

■ 3. Section 370.4 is amended by adding new paragraph (f) to read as follows:

§ 370.4 Reports of use of sound recordings under statutory license for nonsubscription transmission services, preexisting satellite digital audio radio services, new subscription services and business establishment services.

* * * * *

(f) In any case in which a nonsubscription transmission service, preexisting satellite digital audio radio service, new subscription service, or business establishment service has not provided a report of use required under this section for use of sound recordings under section 112(e) or section 114 of title 17 of the United States Code, or both, prior to January 1, 2010, reports of use for the corresponding calendar year filed by other services of the same type shall serve as the reports of use for the non-reporting service, solely for purposes of distribution of any corresponding royalties by the Collective.

PART 382—RATES AND TERMS FOR DIGITAL TRANSMISSIONS OF SOUND RECORDINGS AND THE REPRODUCTION OF EPHEMERAL RECORDINGS BY PREEXISTING SUBSCRIPTION SERVICES AND PREEXISTING SATELLITE DIGITAL AUDIO RADIO SERVICES

■ 4. The authority citation of part 382 continues to read as follows:

Authority: 17 U.S.C. 112(e), 114, and 801(b)(1).

§ 382.3 [Amended]

■ 5. Section 382.3(c)(1) is amended by removing ''§ 370.2'' and adding ''§ 370.3'' in its place.

§ 382.13 [Amended]

■ 6. Section 382.13(f)(1) is amended by removing ''§ 370.3'' and adding ''§ 370.4'' in its place.

Dated: July 14, 2011.

James Scott Sledge,

Chief U.S. Copyright Royalty Judge.

Approved by:

James H. Billington,

Librarian of Congress.

[FR Doc. 2011–19306 Filed 7–29–11; 8:45 am]

BILLING CODE 1410–72–P

[3] Prior to May 31, 2005, the statutory licenses were administered by the Copyright Office under the Copyright Arbitration Royalty Panel (''CARP'') system. The Copyright Royalty and Distribution Reform Act of 2004, Public Law 108–419, 118 Stat. 234, replaced the CARP system with the Copyright Royalty Judges.

DEPARTMENT OF VETERANS AFFAIRS

38 CFR Part 21

RIN 2900–AO10

Vocational Rehabilitation and Employment Program—Changes to Subsistence Allowance

AGENCY: Department of Veterans Affairs.

ACTION: Interim final rule.

SUMMARY: This interim final rule amends Department of Veterans Affairs (VA) regulations to reflect changes made by the Post-9/11 Veterans Educational Assistance Improvements Act of 2010, effective August 1, 2011, that affect payment of vocational rehabilitation benefits for certain service-disabled veterans. Pursuant to these changes, a veteran, who is eligible for a subsistence allowance under chapter 31 of title 38, United States Code, and educational assistance under chapter 33 of title 38, United States Code, may participate in a rehabilitation program under chapter 31 and elect to receive a payment equal in amount to an applicable military housing allowance payable under title 37, United States Code, instead of the regular subsistence allowance under chapter 31. In addition, payments of subsistence allowances during periods between school terms are discontinued, and payments during periods of temporary school closings are modified. This rulemaking amends VA regulations consistent with this new authority.

DATES: This interim final rule is effective August 1, 2011. Comments must be received on or before August 31, 2011.

ADDRESSES: Written comments may be submitted through *http://www.Regulations.gov*; by mail or hand-delivery to Director, Regulations Management (02REG), Department of Veterans Affairs, 810 Vermont Ave., NW., Room 1068, Washington, DC 20420; or by fax to (202) 273–9026. Comments should indicate that they are submitted in response to ''RIN 2900–AO10, Vocational Rehabilitation and Employment Program—Changes to Subsistence Allowance.'' Copies of comments received will be available for public inspection in the Office of Regulation Policy and Management, Room 1063B, between the hours of 8:00 a.m. and 4:30 p.m., Monday through Friday (except holidays). Please call (202) 461–4902 for an appointment. (This is not a toll-free number.) In addition, during the comment period, comments are available online through the Federal Docket Management System (FDMS) at *http://www.Regulations.gov*.

FOR FURTHER INFORMATION CONTACT: Alvin Bauman, Senior Policy Analyst, Vocational Rehabilitation and Employment Service (28), Veterans Benefits Administration, Department of Veterans Affairs, 810 Vermont Ave., NW, Washington, DC 20420, (202) 461–9600 (not a toll-free number).

SUPPLEMENTARY INFORMATION: Section 3108 of title 38, United States Code (U.S.C.), requires the payment of a subsistence allowance to veterans during a period of participation in a rehabilitation program under chapter 31 of title 38, United States Code. Pursuant to 38 U.S.C. 3322(a), a veteran cannot receive assistance under chapter 31 and chapter 33, Post-9/11 Educational Assistance, concurrently; he or she must elect under which chapter to receive assistance. Because the monthly housing allowance authorized under chapter 33 for eligible individuals pursuing programs of education may be considerably higher than the appropriate chapter 31 subsistence allowance, veterans with service-connected disabilities have an incentive to apply for chapter 33 educational assistance rather than enroll in VA's chapter 31 program of vocational rehabilitation and training. By doing so, they would forego certain individualized rehabilitation services, such as counseling and employment assistance, which are available under chapter 31. Congress recognized this and was ''concerned that the greater benefit available under the chapter 33 program provides a disincentive for service-connected disabled veterans to enroll in the chapter 31 program, which means they would forego the important and valuable benefits, services, counseling, and employment assistance support that are available under the chapter 31 program of training and rehabilitation.'' S. Rep. No. 111–346 at 23 (2010). Congress intended to remove this disincentive by allowing eligible veterans to elect a payment equal in amount to an applicable military housing allowance payable under title 37, United States Code, if they enroll in a chapter 31 rehabilitation program. Id.

Accordingly, Congress amended 38 U.S.C. 3108(b), effective August 1, 2011, to authorize a veteran, eligible for both a chapter 31 subsistence allowance and a chapter 33 educational assistance to participate in a rehabilitation program under chapter 31 and elect to receive a payment in an alternate amount in lieu of the chapter 31 subsistence allowance. The Post-9/11 Veterans Educational Assistance Improvements Act of 2010, Public Law 111–377, sec. 205. The alternate amount must be equal to the ''applicable monthly amount of basic allowance for housing payable under [37 U.S.C. 403] for a member with dependents in pay grade E–5 residing in the military housing area that encompasses all or the majority portion of the ZIP code area in which is located the institution providing the rehabilitation program concerned'' (*BAH*). Id. Under the new law, veterans may receive the individualized supportive services provided under chapter 31 and elect the alternate amount to receive a greater monthly allowance than they would otherwise receive.

We are therefore amending 38 CFR 21.264 to allow a veteran to elect a subsistence allowance in an alternate amount, which we refer to as the *Post-9/11 subsistence allowance*, in lieu of the amount provided for in 38 CFR 21.260(b). We are indicating that, to be eligible to elect the *Post-9/11 subsistence allowance*, a veteran must be found to be eligible for training or education under chapter 31 and educational assistance under chapter 33. We specifically indicate that entitlement to all chapter 31 services and assistance remains when this election is made. For administrative purposes, we will allow a veteran who has elected to receive payment of the *Post-9/11 subsistence allowance* to reelect payment of the chapter 31 subsistence allowance at the rate in § 21.260(b) only after completion of a term, quarter, semester, or defined period of instruction, unless the veteran no longer meets the eligibility criteria for the election or would be unable to continue in a rehabilitation program without immediate approval of the reelection.

We are also amending 38 CFR 21.260(a) to include the *Post-9/11 subsistence allowance* as a type of subsistence allowance that a veteran participating in a rehabilitation program under 38 U.S.C. chapter 31 may elect to receive. In addition, we are amending § 21.260 by adding a new paragraph (c) to provide for payment of the *Post-9/11 subsistence allowance* in the event of an election, beginning August 1, 2011, based on the basic allowance for housing payable under 37 U.S.C. 403. In a footnote, we clarify that the *Post-9/11 subsistence allowance* is paid in lieu of the subsistence allowance authorized in § 21.260(b) and is not adjusted for dependents. We interpret Congress' intent in basing the alternate amount a veteran may elect to receive on the basic allowance for housing payable to a member of the military with dependents in pay grade E–5 to mean that all veterans who elect to receive the *Post-9/11 subsistence allowance* should

receive an amount adjusted for dependents. Therefore, we are not further adjusting the *Post-9/11 subsistence allowance* for dependents as we do for chapter 31 subsistence allowance under § 21.260(b).

The rehabilitation program under chapter 31 includes on-job training and non-paid work experience, during which an employer or agency rather than an institution provides the training or rehabilitation. Pub. L. 111–377 authorizes any veteran eligible for both a chapter 31 subsistence allowance and chapter 33 educational assistance, to participate in a rehabilitation program and elect the alternate amount of payment of subsistence allowance, but it does not specify how to calculate the alternate amount in the absence of an institution. To allow payment of the *Post-9/11 subsistence allowance* for veterans who are participating in on-job training or non-paid work experience, in § 21.260(c)(1), we include in the definition of *BAH* that the zip code of the institution, employer, or agency providing the training or rehabilitation may be used in determining the amount of the *Post-9/11 subsistence allowance*.

The applicable rates of payment of the subsistence allowance for veterans participating in a chapter 31 rehabilitation program are set forth in 38 U.S.C. 3108(b) and adjusted based on the rate of pursuit of training, whether full-time, three-quarter-time, or half-time, and increased yearly by the percentage by which the Consumer Price Index increases. Rates of payment for each type of training or rehabilitation program are also found in tables in 38 CFR 21.260(b), with current rates published yearly on the VA's Internet Web site. As stated previously, Pub. L. 111–377, sec. 205, specifies that the alternate amount that may be elected in lieu of the subsistence allowance must be equal to the applicable monthly amount of basic allowance for housing payable under 37 U.S.C. 403 for a member with dependents in pay grade E–5 residing in the military housing area that encompasses all or the majority portion of the ZIP code area in which is located the institution providing the rehabilitation program concerned. However, the new law does not specify that this alternate amount be paid regardless of whether the training is pursued full-time or part-time. There is no indication by Congress that the *Post-9/11 subsistence allowance* must be paid in a manner different than the way current subsistence allowance is paid. We interpret the lack of specificity in this regard as an indication that we may continue to follow our current practice of adjusting subsistence allowance rates based on rate of pursuit of training. Furthermore, we continue to believe that veterans who pursue training on a less than full-time basis should not be paid the full amount of subsistence allowance.

Accordingly, we are adjusting rates of the *Post-9/11 subsistence allowance* based on rates of pursuit of training. In a table in new § 21.260(c), we specify the payments of the *Post-9/11 subsistence allowance* for the rehabilitation program that currently qualifies for payment of a subsistence allowance under chapter 31. In a footnote to the table, we explain that payments for courses being taken simultaneously at more than one institution will be based on the *BAH* of the zip code assigned to the parent institution. We retain the rule with respect to payment of the current subsistence allowance for on-job training that the rate paid may not exceed the difference between the monthly training wage, not including overtime, and the entrance journeyman wage for the veteran's objective. We also retain the rule with respect to payment of the current subsistence allowance for improvement of rehabilitation potential that the quarter-time rate may be paid only during a period of extended evaluation.

For veterans pursuing a program of in-home training, including training with an independent instructor or training solely through distance learning, in which case the institution is in a different zip code than where the veteran is located, Public Law 111–377 does not specify how to calculate payments of the alternate subsistence allowance that may be elected under this law. With respect to payments of the monthly living stipend for veterans receiving chapter 33 educational assistance for pursuit of a program of education solely by distance learning, Public Law 111–377 does specify how to calculate payments. For veterans pursuing a program of education on more than a half-time basis, solely by distance learning, Public Law 111–377 provides for payment of the chapter 33 living stipend at the rate of up to 50 percent of the national average of basic allowance for housing payable under 37 U.S.C. 403 for a member of the military with dependents in pay grade E–5, adjusted based on the rate of pursuit. Congress provided for such rate because it believed that, although ''payment of some portion of the living allowance is appropriate . . . since one of the basic purposes of the living allowance is to offset the cost of housing away from home and since most distance learning is pursued from home, the full allowance does not appear supported at this time.'' S. Rep. No. 111–346 at 11 (2010). Similarly, for veterans pursuing training or rehabilitation under chapter 31 through a program of in-home training, including solely through distance learning, there is no local institution providing the rehabilitation or training and no housing costs to offset. We believe Congress' statement with regard to the monthly living stipend for veterans pursuing a program of education was intended to apply to the similarly situated veterans pursuing training or rehabilitation under chapter 31.

Accordingly, we will base the rate of the *Post-9/11 subsistence allowance* for veterans pursuing training or rehabilitation full-time through a program of in-home training or solely through distance learning on the national average of basic allowance for housing payable under 37 U.S.C. 403 for a member of the military with dependents in pay grade E–5 and pay the allowance at 50 percent of the national average. In § 21.260(c)(2) we define *BAH National Average* as ''the average (i.e., unweighted arithmetic mean) monthly amount of the basic allowance for housing payable under 37 U.S.C. 403 for a member of the military with dependents in pay grade E–5 residing in the United States''. We will continue to make payments, adjusted based on rate of pursuit, for veterans pursuing training or rehabilitation in-home or solely through distance learning. We will therefore calculate the rates of the *Post-9/11 subsistence allowance* for those veterans pursuing training or rehabilitation in home or solely through distance learning at less than full-time (three-quarter time or half-time) in the same manner as we do for veterans pursuing institutional training or rehabilitation. Thus, veterans pursuing training or rehabilitation in-home or solely through distance learning at three-quarter time will receive ¾ of 50 percent of the *BAH National Average,* or ⅜ of the *BAH National Average,* and veterans pursuing training or rehabilitation in-home or solely through distance learning half-time will receive ½ of 50 percent of the *BAH National Average,* or ¼ of the *BAH National Average.* These rates of payment will be found in the table in § 21.260(c). In a footnote to the table, we clarify that payments for training consisting of both distance learning and courses at a local institution are based on the *BAH* of the local institution because the veteran will incur costs away from home that the allowance is intended to offset.

In addition, for veterans pursuing training or rehabilitation under chapter 31 in foreign institutions, in which case there is no institution with a zip code on which to base the rates of payment, Public Law 111–377 does not specify how to calculate payments of the *Post-9/11 subsistence allowance.* For veterans pursuing a program of education under chapter 33 in a foreign country, Public Law 111–377 does specify that payment of the living stipend be based on the national average of basic allowance for housing payable under 37 U.S.C. 403 for a member of the military with dependents in pay grade E–5 and adjusted based on the rate of pursuit. We believe it is reasonable to calculate payments of the Post-911 subsistence allowance for veterans pursuing training or rehabilitation under chapter 31 in foreign institutions in the same manner that Congress provided for similarly situated veterans pursuing a program of education under chapter 33. Therefore, we will base rates of payment of the *Post-9/11 subsistence allowance* for training in foreign institutions on the *BAH National Average* amount. We will continue to make payments of the *Post-9/11 subsistence allowance* for training in foreign institutions adjusted based on rate of pursuit of training.

Under 38 CFR 21.79, VA charges for entitlement usage to determine remaining entitlement. VA bases charges for entitlement usage on the principle that a veteran who pursues a rehabilitation program for one day should be charged one day of entitlement. When a chapter 31 participant elects to receive payment of the *Post-9/11 subsistence allowance* under § 21.260(c) in lieu of a subsistence allowance under § 21.260(b), he or she will continue to receive chapter 31 benefits and services. In such cases, the entitlement usage will be deducted from the veteran's chapter 31 entitlement. No entitlement charges will be made against chapter 33 because the veteran will not be using chapter 33 benefits. We are revising § 21.79 to make clear that we will determine entitlement usage in this manner in the event of an election of the *Post-9/11 subsistence allowance.*

Section 3112 of title 38, United States Code, establishes a revolving fund for VA to use to make advances of no more than twice the amount of the full-time institutional monthly subsistence allowance for a veteran with no dependents to veterans pursuing a rehabilitation program under chapter 31. Section 21.274 of title 38, Code of Federal Regulations, specifies that the fund is to pay veterans who would otherwise be unable to begin or continue in a rehabilitation program without such assistance. Section 21.274 also specifies that the amount of the advance may not exceed the amount needed or twice the monthly subsistence allowance for a veteran without dependents in full-time institutional training. Section 3112 clearly establishes that the limit on these advances is based on the full-time institutional rate for a veteran with no dependents. The full-time institutional rate for a veteran with no dependents is specified in § 21.260(b), whereas all rates in new § 21.260(c) are based on an allowance that includes dependents. Therefore, the limit on the advances may not be based on the rates of the *Post-9/11 subsistence allowance* in § 21.260(c). Accordingly, we clarify in § 21.274(d)(1)(iii) that the limit placed on the amount advanced from the revolving fund is based on the subsistence allowance in § 21.260(b).

Pursuant to 38 U.S.C. 3680(a)(3)(B), subsistence allowances are authorized to be paid during periods when schools are temporarily closed under an established policy based upon an Executive Order of the President or due to an emergency situation, during periods between consecutive school terms if there is a transfer to enroll in and pursue a similar course at a different educational institution if the period between consecutive terms is 30 days or less, or, in certain circumstances, during periods between school terms, where the educational institution certifies enrollment on an individual term basis. Section 206 of Public Law 111–377 removes the authority to continue to pay allowances between consecutive school terms involving a transfer to another educational institution and between school terms where the educational institution certifies enrollment on an individual term basis. Section 206 also restricts the total number of weeks for which allowances may be paid during periods when schools are temporarily closed under an established policy based upon an Executive Order of the President or due to an emergency situation to 4 weeks in any 12-month period.

Accordingly, we are amending our regulation, § 21.270, ''Payment of subsistence allowance during leave and between periods of instruction'', that allows for the payment of subsistence allowance between periods of instruction. We are removing paragraph (b), ''Payment for intervals between periods of instruction'', which currently directs the payment of subsistence allowances for periods between consecutive school terms involving a transfer and between school terms where the educational institution certifies enrollment on an individual term basis. We are also redesignating paragraph (c), ''Payment for other periods'', as paragraph (b). The new paragraph will continue to specify that subsistence allowance will be paid for periods in which the school is closed temporarily under emergency conditions described in § 21.4138(f). In a separate rulemaking, VA is preparing a revision to § 21.4138(f) to incorporate the change in law regarding the restriction on the total number of weeks for which allowances for veterans receiving any VA education benefit, including chapter 31 benefits, may be paid during periods of temporary closure. In addition, we are adding an authority citation to the end of the section for clarification, correcting a misspelling, and revising the section heading to replace the words ''between periods of instruction'' with the words ''other periods''.

Administrative Procedure Act

In accordance with 5 U.S.C. 553(b)(3)(B), the Secretary of Veterans Affairs finds that there is good cause to dispense with advance public notice and opportunity to comment on this rule and good cause to publish this rule with an immediate effective date. The Secretary finds that it is impracticable and contrary to the public interest to delay this regulation for the purpose of soliciting prior public comment. Sections 205 and 206 of Public Law 111–377 require that certain changes to the rehabilitation program take effect on August 1, 2011. This interim final rule is necessary to implement by August 1, 2011, the statutory changes as they relate to chapter 31 subsistence allowances. For instance, Public Law 111–377 does not address how the alternate rate of subsistence allowance will be calculated in different situations. Allowing veterans to elect an alternate rate of subsistence allowance will ensure that such veterans receive the supportive services under chapter 31 to assist them in the transition from military to civilian careers. Because eligible veterans will begin to make the election on August 1, 2011, it is important to have procedures in place by this date to allow veterans to receive the alternate rate of subsistence allowance authorized under the law as soon as they are able. For these reasons, the Secretary of Veterans Affairs is issuing this rule as an interim final rule. The Secretary of Veterans Affairs will consider and address comments that are received within 30 days of the date this

interim final rule is published in the **Federal Register**.

Unfunded Mandates

The Unfunded Mandates Reform Act of 1995 requires, at 2 U.S.C. 1532, that agencies prepare an assessment of anticipated costs and benefits before issuing any rule that may result in the expenditure by State, local, and tribal governments, in the aggregate, or by the private sector, of $100 million or more (adjusted annually for inflation) in any given year. This interim final rule will have no such effect on State, local, and tribal governments, or on the private sector.

Paperwork Reduction Act

This interim final rule does not contain any collections of information under the Paperwork Reduction Act of 1995 (44 U.S.C. 3501–3521).

Regulatory Flexibility Act

The Secretary hereby certifies that this regulatory action will not have a significant economic impact on a substantial number of small entities as they are defined in the Regulatory Flexibility Act, 5 U.S.C. 601–612. This regulatory action will affect individuals and will not affect any small entities. Therefore, pursuant to 5 U.S.C. 605(b), this regulatory action is exempt from the initial and final flexibility analysis requirements of sections 603 and 604.

Congressional Review Act

Under the Congressional Review Act, 5 U.S.C. 801–08, a major rule is one that would have an annual effect on the economy of $100 million or more, cause major increases in costs or prices for consumers, or have significant adverse effects on competition or other aspects of the economy. We have determined this rulemaking to be a major rule because it will have an annual effect on the economy in excess of $100 million. However, this rulemaking falls within an exception to the requirement in 5 U.S.C. 801(a)(3) that a rule may not take effect until at least 60 days after the rule and accompanying report are submitted to Congress. VA will submit a copy of this regulatory action and VA's Regulatory Impact Analysis to the Comptroller General and to Congress, but the rule will become effective upon publication in the Federal Register. The Secretary has determined in accordance with 5 U.S.C. 808(2) that there is good cause to make this regulatory action effective immediately because advance public notice and opportunity to comment thereon are impractical and contrary to the public interest. Sections 205 and 206 of Public Law 111–377 require that the changes to the rehabilitation program take effect on August 1, 2011. VA regulations must be in effect because Public Law 111–377 does not address how the alternate rate of subsistence allowance will be calculated in different situations. Allowing veterans to elect an alternate rate of subsistence allowance will ensure that such veterans receive the supportive services under chapter 31 to assist them in the transition from military to civilian careers. Because eligible veterans will begin to make the election on August 1, 2011, it is important to have procedures in place by this date to allow veterans to receive the alternate rate of subsistence allowance authorized under the law as soon as they are able.

Executive Orders 13563 and 12866

Executive Orders 13563 and 12866 direct agencies to assess the costs and benefits of available regulatory alternatives and, when regulation is necessary, to select regulatory approaches that maximize net benefits (including potential economic, environmental, public health and safety effects, distributive impacts, and equity). Executive Order 13563 emphasizes the importance of quantifying both costs and benefits, of reducing costs, of harmonizing rules, and of promoting flexibility. Executive Order defines a ''significant regulatory action,'' which requires review by the Office of Management and Budget (OMB), as any regulatory action that is likely to result in a rule that may: (1) Have an annual effect on the economy of $100 million or more or adversely affect in a material way the economy, a sector of the economy, productivity, competition, jobs, the environment, public health or safety, or State, local, or tribal governments or communities; (2) create a serious inconsistency or otherwise interfere with an action taken or planned by another agency; (3) materially alter the budgetary impact of entitlements, grants, user fees, or loan programs or the rights and obligations of recipients thereof; or (4) raise novel legal or policy issues arising out of legal mandates, the President's priorities, or the principles set forth in the Executive Order. This rule has been designated an ''economically'' significant regulatory action under section 3(f)(1) of Executive Order 12866. Accordingly, the rule has been reviewed by OMB.

VA has examined the economic, interagency, budgetary, legal, and policy implications of this regulatory action and followed OMB Circular A–4 to the extent feasible in this Regulatory Impact Analysis. The circular first calls for a discussion of the need for the regulatory action.

Statement of Need

This rulemaking will amend VA regulations to reflect changes made by the Post-9/11 Veterans Educational Assistance Improvements Act of 2010. We are revising § 21.264 to allow veterans eligible for a chapter 31 subsistence allowance and chapter 33 educational assistance to elect either the allowable chapter 31 subsistence allowance or an alternate amount of subsistence allowance, referred to as the *Post-9/11 subsistence allowance.* In addition, we are amending § 21.260 to include the *Post-9/11 subsistence allowance* rates, which are based on the military housing allowance payable under title 37, United States Code, referred to as the *BAH*. The *BAH* is based on the ZIP code area where the institution providing the rehabilitation program is located.

We are also amending § 21.274 to clarify that the maximum amount allowable for an advance from the revolving fund will stay the same—twice the amount of full-time subsistence allowance for a veteran with no dependents in institutional training. In § 21.274, we are adding the phrase ''specified in 21.260(b)'' to clarify that the advance from the revolving fund is based on the chapter 31 subsistence allowance rates and not on the *Post-9/11 subsistence allowance* rates specified in § 21.260(c).

In addition, we are amending § 21.270 to prohibit payment of either the chapter 31 subsistence allowance or the *Post-9/11 subsistence allowance* during intervals between school terms. Payments of subsistence allowance between school terms are no longer authorized and payments of subsistence allowance during temporary school closings are limited to 4 weeks in any 12-month period.

Summary of Estimated Impact

The estimated costs associated with this regulation are $111,239,000.00 for Fiscal Year (FY) 2012 and $854,897,000.00 over a 5 year period. These are estimated costs based on the fact that there are significant costs to VA based on new provisions to § 21.264 and an offset of costs (projected savings) from the new provisions to § 21.270 of this rulemaking.

Fiscal year	Estimated impact of paying increased subsistence allowance based on BAH ($000)	Projected savings from no longer allowing payment of subsistence allowance during intervals between terms ($000)	Estimated costs ($000)
2012	$162,579	$51,340	$111,239
2013	194,298	53,685	140,613
2014	224,957	55,252	169,705
2015	257,256	56,865	200,391
2016	291,533	58,584	232,949
5-Year Total	1,130,623	275,726	854,897

Estimated costs and projections are based on the best reasonably obtainable and available economic information. This analysis sets forth the basic assumptions, methods, and data underlying the analysis and discusses the uncertainties associated with the estimates. Assumptions and methodologies for each portion of the analysis are explained in more detail in the Estimate of Potential Program Costs below. VA invites public comments on all of these projections.

Cost Benefit

The *Post-9/11 subsistence allowance* rates are greater than the current chapter 31 subsistence allowance rates. Therefore, VA believes that chapter 31 participants who are eligible to receive the greater subsistence allowance will require less dependence on support programs and will be able to devote more attention to their chapter 31 training/rehabilitation program, thus creating better employment opportunities and a better quality of life.

Alternatives

VA believes that there are no alternatives to the promulgation of this rulemaking. The provisions of sections 205 and 206 of Public Law 111–377 must be implemented in the Code of Federal Regulations to ensure accurate and consistent application of the law.

Estimate of Potential Program Costs

Section 21.264

To project the best possible economic impact of § 21.264 in this rulemaking, VA conducted an analysis to determine the average annual difference between the chapter 31 subsistence allowance rate and the new *Post-9/11 subsistence allowance* rate. Utilizing the FY 2012 President's Budget, the average annual chapter 31 subsistence allowance rate is estimated to be $4,962.12 in FY 2012, and the average annual *Post-9/11 subsistence allowance* rate is estimated to be $12,444.94 in FY 2012. With the average annual *Post-9/11 subsistence allowance* rate being $7,482.82 more than the average annual chapter 31 subsistence allowance rate, VA assumes that all eligible chapter 31 participants will elect to receive the *Post-9/11 subsistence allowance* rate under the new provisions of § 21.264.

VA also conducted an analysis on the total population of participants in the Vocational Rehabilitation and Employment's (VR&E) chapter 31 program. The analysis focused on the number of participants who are currently receiving a monthly chapter 31 subsistence allowance and who also have Operations Enduring Freedom and Iraqi Freedom (OEF/OIF) military service.

Data from VR&E's FY 2012 Workload Projections for Trainees/Participants indicate that there will be approximately a total of 62,078 chapter 31 participants receiving chapter 31 subsistence allowance in FY 2012. Workload projections for the number of participants receiving subsistence allowance were based on FY 2010 actual number of 61,405 from the VA Benefits Delivery Network Computer Output Identification Number Target System Report 6002 with projected increases for FY 2011 and FY 2012. To align with projections from the FY 2012 President's Budget, the number of participants for FY 2012 (63,259) was then reduced by the number of participants that VA projected would transfer from chapter 31 benefits to the Post-9/11 GI Bill. Data-Matching between the Department of Defense and VA databases indicated that approximately 30% of VR&E participants in FY 2011 had OEF/OIF military service that qualified them to elect the *Post-9/11 subsistence allowance.* Over the next five years, VR&E projects an increase of 5% per year of VR&E participants who have OEF/OIF service based on the influx of more recent veterans leaving active duty and applying for benefits while veterans from previous eras complete participation in VR&E.

This data also identified an estimated 21,727 chapter 31 participants, or 35% of the total chapter 31 participants (62,078), who will receive a monthly subsistence allowance in FY 2012 and have OEF/OIF military service. It is estimated that all of these 21,727 participants will elect and receive the *Post-9/11 subsistence allowance* based on their OEF/OIF service in FY 2012.

The estimated total number of chapter 31 participants (21,727) who will be eligible to elect and receive the *Post-9/11 subsistence allowance* based on their OEF/OIF service in FY 2012 was multiplied by the difference between the two subsistence allowance rates ($7,482.82), totaling approximately $163 million in FY 2012.

Projected increases to participants receiving subsistence allowance, average annual payments, and the percentage of chapter 31 participants receiving subsistence allowance were applied in the out-years and shown in the table below.

ESTIMATED IMPACT OF PAYING INCREASED SUBSISTENCE ALLOWANCE BASED ON *BAH*

FY	Total # of Chapter 31 (CH31) participants receiving Subsistence Allowance (SA)	Total # of CH31 participants receiving SA with OEF/OIF service	* Percent of CH31 participants receiving SA with OEF/OIF service	Average annual difference between current CH31 SA and new post-9/11 SA	Obligations ($000)
2012	62,078	21,727	35	$7,482.82	$162,579

ESTIMATED IMPACT OF PAYING INCREASED SUBSISTENCE ALLOWANCE BASED ON *BAH*—Continued

FY	Total # of Chapter 31 (CH31) participants receiving Subsistence Allowance (SA)	Total # of CH31 participants receiving SA with OEF/OIF service	* Percent of CH31 participants receiving SA with OEF/OIF service	Average annual difference between current CH31 SA and new post-9/11 SA	Obligations ($000)
2013	63,892	25,557	40	7,602.54	194,298
2014	64,531	29,038	45	7,746.99	224,957
2015	65,176	32,588	50	7,894.19	257,256
2016	65,828	36,206	55	8,052.07	291,533
5-Year Total					1,130,623

*VA assumes that the percentage of CH31 participants receiving SA and who have OEF/OIF military service will increase by 5% each year based on the influx of more recent veterans leaving active duty and applying for benefits while veterans from previous eras complete participation in VR&E.

Section 21.270

To project the best possible economic impact of § 21.270 in this rulemaking, VA conducted an analysis to determine the associated costs and/or savings by no longer allowing payment of either chapter 31 or *Post-9/11 subsistence allowance* during intervals between school terms.

This amendment applies to all participants of the chapter 31 program who are currently participating in a training/rehabilitation program for which subsistence allowance is payable.

Based on the FY 2012 President's Budget, the average annual subsistence allowance payment is estimated to be $4,962.12 in FY 2012. The average annual payment is based on 9 months of enrollment; therefore, an average monthly subsistence payment would be $551.35. We assumed that, on average, participants would have received one-and-a-half months of interval subsistence allowance based on enrollment in training for 9 months of the year. Therefore, the average annual interval subsistence allowance rate for this 1.5 month interval period is estimated to be $827.03 ($551.35 × 1.5) in FY 2012.

Data from VR&E's FY 2012 Workload Projections for Trainees/Participants indicate that there will be approximately 62,078 chapter 31 participants receiving chapter 31 subsistence allowance in FY 2012. Workload projections for the number of participants receiving subsistence allowance were based on FY 2010 actual number of 61,405 from the VA Benefits Delivery Network Computer Output Identification Number Target System Report 6002 with projected increases for FY 2011 and FY 2012. To align with projections from the FY 2012 President's Budget, the number of participants for FY 2012 (63,259) was then reduced by the number of participants that VA projected would transfer from chapter 31 benefits to the Post-9/11 GI Bill.

The FY 2012 average annual interval subsistence allowance rate ($827.03) was multiplied by the FY 2012 total number of CH31 participants receiving subsistence allowance (62,078), totaling approximately $51,340,000.00 in projected savings to VA in FY 2012. Projected savings are estimated to be $51.3 million during FY 2012 and $275.7 million over a five-year period.

Projected increases to participants receiving subsistence allowance and average annual payments were applied in the out-years and are shown in the table below.

PROJECTED SAVINGS FROM NO LONGER ALLOWING PAYMENT OF SUBSISTENCE ALLOWANCE DURING INTERVALS BETWEEN TERMS

FY	Total # of CH31 participants receiving subsistence allowance (SA)	Average annual interval SA rate (1.5 mths. of SA)	Obligations ($000)
2012	62,078	$827.03	$51,340
2013	63,892	840.25	53,685
2014	64,530	856.22	55,252
2015	65,176	872.49	56,865
2016	65,829	889.94	58,584
5-Year Total			275,726

Accounting Statement and Table

As required by OMB Circular A–4, in the table below, VA has prepared an accounting statement showing the classification of transfers, benefits and costs associated with the provisions of this rulemaking.

Category	Year dollar	Transfers								
		FY2012	FY2013	FY2014	FY2015	FY2016	Present value		Annualized	
							3%	7%	3%	7%
Federal Annualized Monetized Transfers.	2010	$111.2	$140.6	$169.7	$200.4	$232.9	$774.7	$684.2	$164.2	$156.0
		Benefits								
Qualitative benefits		The Post-9/11 subsistence allowance rates are greater than the current CH31 subsistence allowance rates. Therefore, VA believes that CH31 participants who are eligible to receive the greater subsistence allowance will require less dependence on support programs and will be able to devote more attention to their CH31 training/rehabilitation program, thus creating better employment opportunities and a better quality of life.								
		Costs								
Costs		None.								

Identification of Duplicative, Overlapping, or Conflicting Federal Rules

There are no duplicative, overlapping, or conflicting Federal rules identified with this regulatory action.

Catalog of Federal Domestic Assistance

The Catalog of Federal Domestic Assistance number and title for the program that would be affected by this interim final rule is 64.116, Vocational Rehabilitation for Disabled Veterans.

Signing Authority

The Secretary of Veterans Affairs, or designee, approved this document and authorized the undersigned to sign and submit the document to the Office of the Federal Register for publication electronically as an official document of the Department of Veterans Affairs. John R. Gingrich, Chief of Staff, Department of Veterans Affairs, approved this document on July 21, 2011, for publication.

List of Subjects in 38 CFR Part 21

Administrative practice and procedure, Armed forces, Civil rights, Claims, Colleges and universities, Conflict of interests, Education, Employment, Grant programs—education, Grant programs—veterans, Health care, Loan programs—education, Loan programs—veterans, Manpower training programs, Reporting and recordkeeping requirements, Schools, Travel and transportation expenses, Veterans, Vocational education, Vocational rehabilitation.

Dated: July 21, 2011.

Robert C. McFetridge,

Director, Regulation Policy and Management, Office of the General Counsel, Department of Veterans Affairs.

For the reasons set forth in the preamble, VA amends 38 CFR part 21 (subpart A) as follows:

PART 21—VOCATIONAL REHABILITATION AND EDUCATION

Subpart A—Vocational Rehabilitation and Employment Under 38 U.S.C. Chapter 31

■ 1. The authority citation for part 21, subpart A continues to read as follows:

Authority: 38 U.S.C. 501(a), chs. 18, 31, and as noted in specific sections.

■ 2. Amend § 21.79 by:

■ a. Redesignating paragraphs (f)(2), (f)(2)(i), (f)(2)(ii), and (f)(3) as paragraphs (f)(3), (f)(3)(i), (f)(3)(ii), and (f)(4) respectively.

■ b. Adding a new paragraph (f)(2).

■ c. Adding an authority citation at the end of new paragraph (f)(2).

The additions read as follows:

§ 21.79 Determining entitlement usage under Chapter 31.

* * * * *

(f) *Special situations.* * * *

(2) When a chapter 31 participant elects to receive payment of the *Post-9/11 subsistence allowance* under § 21.260(c) in lieu of a subsistence allowance under § 21.260(b), the entitlement usage is deducted from the veteran's chapter 31 entitlement. No entitlement charges are made against chapter 33. (Authority: 38 U.S.C. 3108(b))

* * * * *

■ 3. Amend § 21.260 by:

■ a. Revising paragraph (a).

■ b. Redesignating paragraphs (c) and (d) as paragraphs (d) and (e), respectively.

■ c. Adding a new paragraph (c).

The revisions and addition read as follows:

§ 21.260 Subsistence allowance.

(a) *General.* A veteran participating in a rehabilitation program under 38 U.S.C. chapter 31 will receive a monthly subsistence allowance at the rates in paragraph (b) of this section, unless the veteran elects to receive an alternate payment (for the purposes of part 21, subpart A, referred to as the *Post-9/11 subsistence allowance*) as specified in paragraph (c) of this section, or payment at the rate of monthly educational assistance allowance payable under 38 U.S.C. chapter 30 for the veteran's type of training. *See* § 21.264(a) for election of payment at the chapter 30 rate and § 21.264(b) for election of the *Post-9/11 subsistence allowance. See* §§ 21.7136, 21.7137, and 21.7138 to determine the applicable chapter 30 rate.

(Authority: 38 U.S.C. 3108(a), 3108(b), 3108(f))

* * * * *

(c) *Rate of payment of Post-9/11 subsistence allowance.* In lieu of the subsistence allowance payable under paragraph (b) of this section, VA pays the *Post-9/11 subsistence allowance* at the rates in the table at the end of this paragraph, effective August 1, 2011, based on the basic allowance for housing payable under 37 U.S.C. 403. For purposes of the following table:

(1) *BAH* means ''the applicable amount of basic allowance for housing payable under 37 U.S.C. 403 for a member of the military with dependents in pay grade E–5 residing in the military housing area that encompasses all or the majority portion of the ZIP code area in which is located the institution, agency,

or employer providing the rehabilitation program concerned''.

(2) *BAH National Average* means ''the average (i.e., unweighted arithmetic mean) monthly amount of the basic allowance for housing payable under 37 U.S.C. 403 for a member of the military with dependents in pay grade E–5 residing in the United States''.

PAYMENT OF POST-9/11 SUBSISTENCE ALLOWANCE IN ACCORDANCE WITH PUBLIC LAW 111–377

[Effective August 1, 2011] [1]

Type of program	Payment
Institutional: [2]	
Full-time	Entire *BAH* of institution ZIP code.
¾ time	¾ *BAH* of institution ZIP code.
½ time	½ *BAH* of institution ZIP code.
Nonpay or nominal pay on-job training in a Federal, State, local, or federally recognized Indian tribe agency; vocational course in a rehabilitation facility or sheltered workshop; institutional non-farm cooperative:	
Full-time only	Entire *BAH* of agency or institution ZIP code.
Nonpay or nominal pay work experience in a Federal, State, local, or federally recognized Indian tribe agency:	
Full-time	Entire *BAH* of agency ZIP code.
¾ time	¾ *BAH* of agency ZIP code.
½ time	½ *BAH* of agency ZIP code.
Farm cooperative, apprenticeship, or other on-job training (OJT): [3]	
Full-time only	Entire *BAH* of employer ZIP code.
Combination of institutional and OJT (Full-time only):	
Institutional greater than ½ time	Entire *BAH* of institution ZIP code.
OJT greater than ½ time [3]	Entire *BAH* of employer ZIP code.
Non-farm cooperative (Full-time only):	
Institutional	Entire *BAH* of institution ZIP code.
On-job [3]	Entire *BAH* of employer ZIP code.
Improvement of rehabilitation potential:	
Full-time	Entire *BAH* of institution ZIP code.
¾ time	¾ *BAH* of institution ZIP code.
½ time	½ *BAH* of institution ZIP code.
¼ time [4]	¼ *BAH* of institution ZIP code.
Training consisting of solely distance learning: [5]	
Full-time	½ *BAH National Average*.
¾ time	⅜ *BAH National Average*.
½ time	¼ *BAH National Average*.
Training in the home, including independent instructor:	
Full-time only	½ *BAH National Average*.
Training in an institution not assigned a ZIP code, including foreign institutions:	
Full-time	Entire *BAH National Average*.
¾ time	¾ *BAH National Average*.
½ time	½ *BAH National Average*.

[1] Effective August 1, 2011, the *Post-9/11 subsistence allowance* may be paid in lieu of subsistence allowance authorized in § 21.260(b), and is not adjusted to include dependents.

[2] For measurement of rate of pursuit, see §§ 21.4270 and 21.4272 through 21.4275. Payments for courses being taken simultaneously at more than one institution are based on the *BAH* of the ZIP code assigned to the parent institution.

[3] For on-job training, payment of the *Post-9/11 subsistence allowance* may not exceed the difference between the monthly training wage, not including overtime, and the entrance journeyman wage for the veteran's objective.

[4] The quarter-time rate may be paid only during extended evaluation.

[5] Payment for training consisting of both distance learning and courses taken at a local institution is based on the *BAH* of the ZIP code assigned to the local institution.

(Authority: 38 U.S.C. 3108, 3115(a)(1))

* * * * *

■ 4. Amend § 21.264 by:

■ a. Revising the section heading.

■ b. Redesignating paragraphs (a) introductory text, (a)(1), (a)(2), and (a)(3) as paragraphs (a)(1), (a)(1)(i), (a)(1)(ii), and (a)(1)(iii) respectively.

■ c. Adding a new heading to paragraph (a).

■ d. Redesignating paragraphs (b) introductory text, (b)(1), and (b)(2) as paragraphs (a)(2), (a)(2)(i), and (a)(2)(ii), respectively.

■ e. Redesignating paragraphs (c) introductory text, (c)(1), (c)(2), and (c)(3) as paragraph (a)(3), (a)(3)(i), (a)(3)(ii), and (a)(3)(iii), respectively.

■ f. Further redesignating paragraphs (c)(3)(i), (c)(3)(ii), and (c)(3)(iii) as paragraphs (a)(3)(iii)(A), (a)(3)(iii)(B), and (a)(3)(iii)(C), respectively.

■ g. Redesignating paragraph (d) as paragraph (a)(4).

■ h. Adding a new paragraph (b).

■ i. Revising the authority citation at the end of the section.

The revisions and additions read as follows:

§ 21.264 Election of payment at the 38 U.S.C. chapter 30 educational assistance rate or election of payment of Post-9/11 subsistence allowance.

(a) *Election of chapter 30 educational assistance rate.* * * *

(b) *Election of payment of Post-9/11 subsistence allowance.*

(1) *Eligibility.* Effective August 1, 2011, a veteran who applies and is eligible for training or education under chapter 31 may elect to receive payment of the *Post-9/11 subsistence allowance* under § 21.260(c) in lieu of a subsistence allowance under § 21.260(b), provided the veteran has remaining eligibility for, and

entitlement to, educational assistance under chapter 33, Post-9/11 GI Bill.

(2) *Reelection of subsistence allowance under § 21.260(b).* Reelection of payment of benefits at the chapter 31 subsistence allowance rate under § 21.260(b) may be made only after completion of a term, quarter, semester, or other period of instruction unless:

(i) Chapter 33 eligibility or entitlement ends earlier; or

(ii) Failure to approve immediate reelection would prevent the veteran from continuing in the rehabilitation program.

(3) *Services under chapter 31.* A veteran who elects payment of the *Post-9/11 subsistence allowance* remains entitled to all other services and assistance under chapter 31.

(Authority: 38 U.S.C. 3108(b))

■ 5. Amend § 21.270 by:

■ a. Revising the section heading.

■ b. Removing paragraph (b).

■ c. Redesignating paragraph (c) as paragraph (b).

■ d. In newly redesignated paragraph (b), removing ''Weeekend'' and adding, in its place, ''Weekend''.

■ e. Adding an authority citation at the end of the section.

The revision and addition read as follows:

§ 21.270 Payment of subsistence allowance during leave and other periods.

* * * * *

(Authority: 38 U.S.C. 3680(a))

■ 6. Revise § 21.274 (d)(1)(iii) to read as follows:

§ 21.274 Revolving fund loan.

* * * * *

(d) * * *

(1) * * *

(iii) The advance does not exceed either the amount needed, or twice the monthly subsistence allowance for a veteran without dependents in full-time institutional training specified in § 21.260(b); and

* * * * *

[FR Doc. 2011–19473 Filed 7–29–11; 8:45 am]

BILLING CODE 8320–01–P

ENVIRONMENTAL PROTECTION AGENCY

40 CFR Part 52

[EPA–R03–OAR–2011–0471; FRL–9445–9]

Approval and Promulgation of Air Quality Implementation Plans; Pennsylvania; Diesel-Powered Motor Vehicle Idling Act

AGENCY: Environmental Protection Agency (EPA).

ACTION: Direct final rule.

SUMMARY: EPA is taking direct final action to approve a revision to the Pennsylvania State Implementation Plan (SIP). The revision consists of the Commonwealth's Diesel-Powered Motor Vehicle Idling Act (hereafter referred to as the Diesel-Powered Motor Vehicle Idling Act or as Act 124 of 2008, or simply Act 124). Act 124, passed by the Pennsylvania General Assembly and signed into state law by Governor Rendell in October 2008 (and effective at the state level in February 2009), reduces the allowable time that heavy-duty, commercial highway diesel vehicles of over 10,000 pounds gross vehicle weight can idle their main propulsion engines. The law restricts idling of these commercial diesel vehicles (mostly heavy trucks and buses) to a period of 5 minutes per continuous 60 minute period (with certain allowable exemptions and exclusions). Act 124 applies statewide in the Commonwealth, and is estimated by Pennsylvania to significantly reduce emissions of nitrogen oxides, volatile organic compounds, and fine particulate matter. While idle time emissions limits are not mandatory under the Clean Air Act (CAA), incorporation of Act 124 into the SIP does strengthen the SIP, makes the state law federally enforceable by EPA, and allows the Commonwealth to take credit for emissions benefits from the rule as part of future Pennsylvania SIP revisions to demonstrate compliance with CAA National Ambient Air Quality Standards (NAAQS). EPA is approving this revision governing idling time limits on commercial heavy duty vehicles into the Pennsylvania SIP. This action is not a federal mandate required by the CAA, but provides emission reductions that aid Pennsylvania in complying with CAA NAAQS. EPA's approval of this SIP revision is being done in accordance with the requirements of the CAA.

DATES: This rule is effective on September 30, 2011 without further notice, unless EPA receives adverse written comment by August 31, 2011. If EPA receives such comments, it will publish a timely withdrawal of the direct final rule in the **Federal Register** and inform the public that the rule will not take effect.

ADDRESSES: Submit your comments, identified by Docket ID Number EPA–R03–OAR–2011–0471 by one of the following methods:

A. *http://www.regulations.gov.* Follow the on-line instructions for submitting comments.

B. *E-mail: fernandez.cristina@epa.gov*

C. *Mail:* EPA–R03–OAR–2011–0471, Cristina Fernandez, Associate Director, Office of Air Program Planning, Mailcode 3AP30, U.S. Environmental Protection Agency, Region III, 1650 Arch Street, Philadelphia, Pennsylvania 19103.

D. *Hand Delivery:* At the previously-listed EPA Region III address. Such deliveries are only accepted during the Docket's normal hours of operation, and special arrangements should be made for deliveries of boxed information.

Instructions: Direct your comments to Docket ID Number EPA–R03–OAR–2011–0471. EPA's policy is that all comments received will be included in the public docket without change, and may be made available online at *http://www.regulations.gov,* including any personal information provided, unless the comment includes information claimed to be Confidential Business Information (CBI) or other information whose disclosure is restricted by statute. Do not submit information that you consider to be CBI or otherwise protected through *http://www.regulations.gov* or e-mail. The *http://www.regulations.gov* Web site is an ''anonymous access'' system, which means EPA will not know your identity or contact information unless you provide it in the body of your comment. If you send an e-mail comment directly to EPA without going through *http://www.regulations.gov,* your e-mail address will be automatically captured and included as part of the comment that is placed in the public docket and made available on the Internet. If you submit an electronic comment, EPA recommends that you include your name and other contact information in the body of your comment and with any disk or CD–ROM you submit. If EPA cannot read your comment due to technical difficulties and cannot contact you for clarification, EPA may not be able to consider your comment. Electronic files should avoid the use of special characters, any form of encryption, and be free of any defects or viruses.

Docket: All documents in the electronic docket are listed in the *http://www.regulations.gov* index. Although listed in the index, some information is not publicly available, *i.e.,* CBI or other information whose disclosure is restricted by statute. Certain other material, such as copyrighted material, is not placed on the Internet and will be publicly available only in hard copy form. Publicly available docket materials are available either electronically in *http://www.regulations.gov* or in hard copy during normal business hours at the Air

Protection Division, U.S. Environmental Protection Agency, Region III, 1650 Arch Street, Philadelphia, Pennsylvania 19103. Copies of the State submittal are available at the Pennsylvania Department of Environmental Protection, Bureau of Air Quality Control, P.O. Box 8468, 400 Market Street, Harrisburg, Pennsylvania 17105.

FOR FURTHER INFORMATION CONTACT: Brian Rehn, (215) 814–2176, or by e-mail at *rehn.brian@epa.gov.*

SUPPLEMENTARY INFORMATION: Throughout this rulemaking action, whenever ''we,'' ''us,'' or ''our'' is used, we are referring to EPA. The following outline is provided to aid in locating information in this preamble.

I. Summary of the SIP Revision
A. Applicability
B. Penalties for Violations
C. Idle Restriction Signage Requirements
D. Preemption of Local Ordinances and Rules
II. What action is EPA taking?
III. Why is EPA approving Pennsylvania's SIP revision?
IV. Final Action
V. Statutory and Executive Order Reviews

I. Summary of the SIP Revision

On January 21, 2010, Pennsylvania submitted a SIP revision to incorporate its Diesel-Powered Motor Vehicle Idling Act. Act 124, as this statute became known, was effective at the state level on February 6, 2009, and is codified in Title 35, Chapter 23B of the Pennsylvania Statute. Act 124 restricts unnecessary idling of the main propulsion engine of in-use diesel-powered commercial, heavy duty motor vehicles of over 10,000 pounds gross vehicle weight rating. With certain exceptions and exemptions, idling of subject trucks and buses is restricted to 5 minutes in any continuous 60-minute period. The purpose of Act 124 is to reduce emissions of air pollutants, including nitrogen oxides and volatile organic compounds, both of which are precursors to the formation of ground level ozone, and which are governed by a NAAQS under authority of the CAA. Act 124 also addresses fine particulate matter, another group of pollutants which is regulated by a NAAQS under the Clean Air Act.

A. Applicability

Act 124 restricts extended idling of diesel-powered highway vehicles that are used for commercial purposes and have a gross vehicle weight rating (GVWR) of over 10,000 pounds while operating in the Commonwealth of Pennsylvania. The regulation sets a time limit of five minutes of idling (*i.e.,* defined as operation of vehicle's main propulsion engine while the vehicle is stationary) per continuous 60 minute period. Section 3 of Pennsylvania's Act 124 specifically excludes certain types of highway vehicles from these idling restrictions, including motor homes, implements of husbandry, and farm vehicles and equipment.

These idling restrictions do not apply to a diesel-powered motor vehicle with a label from the California Air Resources Board showing that the vehicle's engine meets California's optional idling emission standard for nitrogen oxide emissions (per applicable California law as it relates to 1985 and newer heavy-duty vehicles and engines (13 CCR 1956.8(a)(6)(C)).

For vehicles that are subject to Pennsylvania's Act 124, exemptions that allow idling beyond the five-minute per hour time limit are specified therein, including:

(1) Idling caused by traffic conditions, traffic control devices or signals, or law enforcement officials;

(2) idling necessary to operate defrosters, heaters, air conditioners, or cargo refrigeration equipment, or idling necessary to install equipment, or idling related to a safety or health emergency (not for purposes of a rest period), or to comply with manufacturers' operating requirements or operating specifications or warranties in accordance with federal or state motor carrier safety regulations;

(3) idling of a police, fire, ambulance, public safety, military, utility service, or other law enforcement vehicle or vehicle being used in an emergency capacity and not for the convenience of the driver;

(4) idling of the main propulsion engine for maintenance, particulate matter trap regeneration, servicing, or repair of the vehicle or for vehicle diagnostic purposes, if idling is required for that activity;

(5) idling performed as part of a state inspection to verify the equipment is in good working order, if necessary as part of the inspection;

(6) idling of a primary propulsion engine to power work-related mechanical, safety, or electrical operations other than propulsion (not done for cabin comfort or to operation nonessential onboard equipment);

(7) idling of a primary propulsion engine necessary as part of a security inspection, such as entering or exiting a facility;

(8) idling of an armored vehicle when a person remains inside to guard the contents or during loading or unloading;

(9) idling due to mechanical difficulties in which the driver has no control (if the owner submits repair documentation to the Pennsylvania Department of Environmental Protection within 30 days) verifying that the mechanical problem has been remedied;

(10) idling of a bus, school bus, or school vehicle to provide heat or air conditioning when non-driver passengers are onboard (up to a maximum of 15 minutes per continuous 60 minute period);

(11) idling necessary for sampling, weighing, active loading or unloading for an attended motor vehicle waiting for sampling, weighing, loading, or unloading (up to 15 minutes per continuous 60 minute period);

(12) idling by a school bus or school vehicle off school property during queuing for the sequential discharge or pickup of students where the physical configuration of the school or surrounding location does not allow for stopping;

(13) idling where necessary for maintaining safe operating conditions while waiting for a police escort when transporting a load requiring issuance of a special permit for excessive size and weight;

(14) idling when actively engaged in solid waste collection or the collection of source-separated recyclable materials (not to apply when a vehicle is not actively engaged in solid waste or source separated recyclables collection);

B. Penalties for Violations

Pennsylvania Act 124 lists penalties that may result from violations of the idling limits in Section 5 of Act 124. Violations constitute a summary offense, punishable by a fine of not less than $150 and not more than $300 and court costs. In addition, the Commonwealth may issue enforcement orders and civil penalties to aid in the enforcement of Act 124.

C. Idling Restriction Signage Requirements

Pennsylvania Act 124 requires that an owner or operator of a location where vehicles subject to the act load or unload that provide 15 or more parking spaces for vehicles subject to Act 124 shall erect and maintain permanent signs that inform drivers that idling of heavy, commercial diesel-powered vehicles is restricted in Pennsylvania.

D. Preemption of Local Ordinances or Rules

Section 9 of Act 124 preempts and supersedes local ordinance or rules concerning idling restrictions on vehicles subject to Act 124, except where the local rule is more restrictive than the provisions of Act 124 (if the local ordinance or rule was in effect prior to January 1, 2007).

II. What rulemaking action is EPA taking?

EPA is approving a formal revision to the Pennsylvania SIP submitted by the Commonwealth on January 21, 2010. This SIP revision consists of the Diesel-Powered Motor Vehicle Idling Act of 2008 (codified in the Pennsylvania Statute, Title 35, chapter 23B 4601–4610), which was signed into law by Governor Rendell on October 9, 2008 and became effective as state law on February 6, 2009. EPA is taking direct final rulemaking action to approve this SIP revision, and is acting to incorporate by reference Pennsylvania Act 124 of 2008 entitled, ''The Diesel Powered Motor Vehicle Idling Act'' (codified at Title 35, chapter 23B, 4601–4610 of the Pennsylvania Statute).

III. Why is EPA approving Pennsylvania's SIP revision?

Pennsylvania's Diesel-Powered Motor Vehicle Idling Act SIP results in reduced emissions of pollutants that contribute to nonattainment of NAAQS for ozone and fine particulate matter. Specifically, Pennsylvania Act 124 leads to elimination of such pollutants resulting from unnecessary extended idling of heavy-duty, diesel-powered commercial vehicles. The reduction in vehicle idling resulting from this statute decreases emissions of volatile organic compounds and nitrogen oxides, both of which are ground level ozone pollution precursors. Pennsylvania's Act 124 also reduces emissions of fine particulate matter, in addition to carbon monoxide and carbon dioxide.

The approval of Pennsylvania's Act 124 will strengthen the Pennsylvania SIP and will assist the Commonwealth in complying with federal ambient air quality standards, including the NAAQS for ground level ozone and fine particulate matter. Act 124 is consistent with EPA's ''Model State Idling Law'' (EPA420–S–06–001, April 2006). This model rule was developed with input from the states and affected industry to address extended idling issues in a consistent manner from state to state and to aid those being regulated in compliance with compliance with idling limits.

IV. Final Action

EPA is approving Pennsylvania's Diesel-Powered Motor Vehicle Idling SIP and incorporating Pennsylvania Act 124 of 2008 into the Pennsylvania SIP. Act 124 is intended to reduce emissions caused by unnecessary idling of heavy-duty, diesel-powered, commercial motor vehicles within the boundaries of the Commonwealth of Pennsylvania.

EPA is publishing this rule without prior proposal because we view this as a noncontroversial amendment and we anticipate we will receive no adverse comment. Act 124 has been in effect at the state level in Pennsylvania since February 6, 2009. Therefore, the regulated community should be accustomed to the idling restrictions imposed by this state statute.

Similar provisions for reduced idling have been adopted in many other states, including the neighboring states of Delaware, Maryland, New York, New Jersey, Ohio, and West Virginia. We anticipate the regulated parties will understand Pennsylvania's requirements as they relate to other nearby states and localities with similar vehicle idling restrictions. Pennsylvania Act 124 complies with EPA's idling guidance and model rule. For these reasons, EPA anticipates that this direct final action to approve Pennsylvania's Diesel-Powered Vehicle Idling Act SIP revision will not be controversial. However, in the ''Proposed Rules'' section of today's **Federal Register**, EPA is publishing a separate document that will serve as the proposal to approve the SIP revision if adverse comments are filed. This rule will be effective on September 30, 2011 without further notice unless EPA receives adverse comment by August 31, 2011. If EPA receives adverse comment, EPA will publish a timely withdrawal in the **Federal Register** informing the public that the rule will not take effect. EPA will address all public comments in a subsequent final rule based on the proposed rule. EPA will not institute a second comment period on this action. Any parties interested in commenting must do so at this time.

V. Statutory and Executive Order Reviews

A. General Requirements

Under the CAA, the Administrator is required to approve a SIP submission that complies with the provisions of the CAA and applicable Federal regulations. 42 U.S.C. 7410(k); 40 CFR 52.02(a). Thus, in reviewing SIP submissions, EPA's role is to approve state choices, provided that they meet the criteria of the CAA. Accordingly, this action merely approves state law as meeting Federal requirements and does not impose additional requirements beyond those imposed by state law. For that reason, this action:

- Is not a ''significant regulatory action'' subject to review by the Office of Management and Budget under Executive Order 12866 (58 FR 51735, October 4, 1993);
- Does not impose an information collection burden under the provisions of the Paperwork Reduction Act (44 U.S.C. 3501 *et seq.*);
- Is certified as not having a significant economic impact on a substantial number of small entities under the Regulatory Flexibility Act (5 U.S.C. 601 *et seq.*);
- Does not contain any unfunded mandate or significantly or uniquely affect small governments, as described in the Unfunded Mandates Reform Act of 1995 (Pub. L. 104–4);
- Does not have Federalism implications as specified in Executive Order 13132 (64 FR 43255, August 10, 1999);
- Is not an economically significant regulatory action based on health or safety risks subject to Executive Order 13045 (62 FR 19885, April 23, 1997);
- Is not a significant regulatory action subject to Executive Order 13211 (66 FR 28355, May 22, 2001);
- Is not subject to requirements of Section 12(d) of the National Technology Transfer and Advancement Act of 1995 (15 U.S.C. 272 note) because application of those requirements would be inconsistent with the CAA; and
- Does not provide EPA with the discretionary authority to address, as appropriate, disproportionate human health or environmental effects, using practicable and legally permissible methods, under Executive Order 12898 (59 FR 7629, February 16, 1994).

In addition, this rule does not have tribal implications as specified by Executive Order 13175 (65 FR 67249, November 9, 2000), because the SIP is not approved to apply in Indian country located in the state, and EPA notes that it will not impose substantial direct costs on tribal governments or preempt tribal law.

B. Submission to Congress and the Comptroller General

The Congressional Review Act, 5 U.S.C. 801 *et seq.,* as added by the Small Business Regulatory Enforcement Fairness Act of 1996, generally provides that before a rule may take effect, the agency promulgating the rule must submit a rule report, which includes a copy of the rule, to each House of the Congress and to the Comptroller General of the United States. EPA will submit a report containing this action and other required information to the U.S. Senate, the U.S. House of Representatives, and the Comptroller General of the United States prior to publication of the rule in the **Federal Register**. A major rule cannot take effect until 60 days after it is published in the **Federal Register**.

This action is not a ''major rule'' as defined by 5 U.S.C. 804(2).

C. Petitions for Judicial Review

Under section 307(b)(1) of the CAA, petitions for judicial review of this action must be filed in the United States Court of Appeals for the appropriate circuit by September 30, 2011. Filing a petition for reconsideration by the Administrator of this final rule does not affect the finality of this action for the purposes of judicial review nor does it extend the time within which a petition for judicial review may be filed, and shall not postpone the effectiveness of such rule or action. Parties with objections to this direct final rule are encouraged to file a comment in response to the parallel notice of proposed rulemaking for this action published in the proposed rules section of today's **Federal Register**, rather than file an immediate petition for judicial review of this direct final rule, so that EPA can withdraw this direct final rule and address the comment in the proposed rulemaking.

This action to approve the Pennsylvania Diesel-Powered Vehicle Idling Act SIP revision may not be challenged later in proceedings to enforce its requirements. (See section 307(b)(2).)

List of Subjects in 40 CFR Part 52

Environmental protection, Air pollution control, Carbon monoxide, Incorporation by reference, Nitrogen dioxide, Ozone, Particulate matter, Reporting and recordkeeping requirements, Volatile organic compounds.

Dated: July 18, 2011.

W.C. Early,

Acting Regional Administrator, Region III.

40 CFR part 52 is amended as follows:

PART 52—[AMENDED]

■ 1. The authority citation for part 52 continues to read as follows:

Authority: 42 U.S.C. 7401 *et seq.*

Subpart NN—Pennsylvania

■ 2. In § 52.2020, the table in paragraph (c)(1) is amended by revising the paragraph title and adding Title 35 Pennsylvania Statute, Chapter 23B, Sections 4601 to 4610, at the end of the table to read as follows:

§ 52.2020 Identification of plan.

* * * * *

(c) * * *

(1) EPA-APPROVED PENNSYLVANIA REGULATIONS AND STATUTES

State citation	Title/subject	State effective date	EPA approval date	Additional explanation/ § 52.2063 citation
*	*	*	*	*
Title 35 Pennsylvania Statute—Health and Safety Chapter 23B—Diesel-Powered Motor Vehicle Idling Act			
Section 4601	Short title	2/6/09	8/1/11 *[Insert page number where the document begins]*.	
Section 4602	Definitions	2/6/09	8/1/11 *[Insert page number where the document begins]*.	
Section 4603	Restrictions on idling	2/6/09	8/1/11 *[Insert]*	
Section 4604	Increase of weight limit	2/6/09	8/1/11 *[Insert page number where the document begins]*.	
Section 4605	Penalties	2/6/09	8/1/11 *[Insert page number where the document begins]*.	
Section 4606	Disposition of fines	2/6/09	8/1/11 *[Insert page number where the document begins]*.	
Section 4607	Enforcement	2/6/09	8/1/11 *[Insert page number where the document begins]*.	
Section 4608	Permanent idling restriction signs	2/6/09	8/1/11 *[Insert page number where the document begins]*.	
Section 4609	Preemption	2/6/09	8/1/11 *[Insert page number where the document begins]*.	
Section 4610	Applicability	2/6/09	8/1/11 *[Insert page number where the document begins]*.	

* * * * *

[FR Doc. 2011–19276 Filed 7–29–11; 8:45 am]

BILLING CODE 6560–50–P

DEPARTMENT OF COMMERCE

National Oceanic and Atmospheric Administration

50 CFR Part 679

[Docket No. 101126522–0640–02]

DEPARTMENT OF ENERGY

RIN 0648–XA610

Fisheries of the Exclusive Economic Zone Off Alaska; Pacific Ocean Perch in the West Yakutat District of the Gulf of Alaska

AGENCY: National Marine Fisheries Service (NMFS), National Oceanic and Atmospheric Administration (NOAA), Commerce.

ACTION: Temporary rule; closure.

SUMMARY: NMFS is prohibiting directed fishing for Pacific ocean perch in the West Yakutat District of the Gulf of Alaska (GOA). This action is necessary to prevent exceeding the 2011 total allowable catch (TAC) of Pacific ocean perch in the West Yakutat District of the GOA.

DATES: Effective 1200 hrs, Alaska local time (A.l.t.), July 27, 2011, through 2400 hrs, A.l.t., December 31, 2011.

FOR FURTHER INFORMATION CONTACT: Steve Whitney, 907–586–7269.

SUPPLEMENTARY INFORMATION: NMFS manages the groundfish fishery in the GOA exclusive economic zone according to the Fishery Management Plan for Groundfish of the Gulf of Alaska (FMP) prepared by the North Pacific Fishery Management Council under authority of the Magnuson-Stevens Fishery Conservation and Management Act. Regulations governing fishing by U.S. vessels in accordance with the FMP appear at subpart H of 50 CFR part 600 and 50 CFR part 679.

The 2011 TAC of Pacific ocean perch in the West Yakutat District of the GOA is 1,937 metric tons (mt) as established by the final 2011 and 2012 harvest specifications for groundfish of the GOA (76 FR 11111, March 1, 2011).

In accordance with § 679.20(d)(1)(i), the Administrator, Alaska Region, NMFS (Regional Administrator), has determined that the 2011 TAC of Pacific ocean perch in the West Yakutat District of the GOA will soon be reached. Therefore, the Regional Administrator is establishing a directed fishing allowance of 1,837 mt, and is setting aside the remaining 100 mt as bycatch to support other anticipated groundfish fisheries. In accordance with § 679.20(d)(1)(iii), the Regional Administrator finds that this directed fishing allowance has been reached. Consequently, NMFS is prohibiting directed fishing for Pacific ocean perch in the West Yakutat District of the GOA.

After the effective date of this closure the maximum retainable amounts at § 679.20(e) and (f) apply at any time during a trip.

Classification

This action responds to the best available information recently obtained from the fishery. The Assistant Administrator for Fisheries, NOAA (AA), finds good cause to waive the requirement to provide prior notice and opportunity for public comment pursuant to the authority set forth at 5 U.S.C. 553(b)(B) as such requirement is impracticable and contrary to the public interest. This requirement is impracticable and contrary to the public interest as it would prevent NMFS from responding to the most recent fisheries data in a timely fashion and would delay the closure of Pacific ocean perch in the West Yakutat District of the GOA. NMFS was unable to publish a notice providing time for public comment because the most recent, relevant data only became available as of July 26, 2011.

The AA also finds good cause to waive the 30-day delay in the effective date of this action under 5 U.S.C. 553(d)(3). This finding is based upon the reasons provided above for waiver of prior notice and opportunity for public comment.

This action is required by § 679.20 and is exempt from review under Executive Order 12866.

Authority: 16 U.S.C. 1801 *et seq.*

Dated: July 27, 2011.

Margo Schulze-Haugen,

Acting Director, Office of Sustainable Fisheries, National Marine Fisheries Service.

[FR Doc. 2011–19394 Filed 7–27–11; 4:15 pm]

BILLING CODE 3510–22–P

Proposed Rules

Federal Register
Vol. 76, No. 147
Monday, August 1, 2011

This section of the FEDERAL REGISTER contains notices to the public of the proposed issuance of rules and regulations. The purpose of these notices is to give interested persons an opportunity to participate in the rule making prior to the adoption of the final rules.

OFFICE OF PERSONNEL MANAGEMENT

5 CFR Parts 530, 531, and 536

RIN 3206–AM43

Pay in Nonforeign Areas

AGENCY: U.S. Office of Personnel Management.

ACTION: Proposed rule with request for comments.

SUMMARY: The U.S. Office of Personnel Management (OPM) proposes to revise certain pay administration rules dealing with employees in nonforeign areas outside the 48 contiguous States. The proposed regulations would allow consideration of locality pay and nonforeign area cost-of-living allowances (COLAs) in evaluating the need for special rates, special rate supplements to be computed using an alternate method in nonforeign areas, locality rates to be considered basic pay for the purpose of computing nonforeign area COLAs and post differentials, a retained rate established based on a special rate payable in a nonforeign area that is in excess of the applicable limitation on special rates on January 1, 2012, to exceed the rate payable for level IV of the Executive Schedule, and temporary and term employees in nonforeign areas to be eligible for a retained rate in certain circumstances.

DATES: Comments must be received on or before September 15, 2011.

ADDRESSES: You may submit comments, identified by RIN number ''3206–,'' using either of the following methods:

Federal eRulemaking Portal: http://www.regulations.gov. Follow the instructions for submitting comments.

Mail: Jerome D. Mikowicz, Deputy Associate Director, Pay and Leave, Employee Services, U.S. Office of Personnel Management, Room 7H31, 1900 E Street, NW., Washington, DC 20415–8200.

FOR FURTHER INFORMATION CONTACT: Carey Jones by telephone at (202) 606–2858; by fax at (202) 606–0824; or by e-mail at *pay-leave-policy@opm.gov.*

SUPPLEMENTARY INFORMATION: The U.S. Office of Personnel Management (OPM) is issuing proposed regulations to revise certain pay administration rules for employees in ''nonforeign areas,'' which include Alaska, Hawaii, Guam, Puerto Rico, the Virgin Islands, and certain other areas listed in 5 CFR 591.205. Some of the proposed revisions are necessary to address the effects of implementing the Non-Foreign Area Retirement Equity Assurance Act of 2009 (NAREAA), as contained in subtitle B of title XIX of the National Defense Authorization Act for Fiscal Year 2010 (Pub. L. 111–84, October 28, 2009).

NAREAA Provisions Affecting Locality Rates, Special Rates, and Retained Rates

NAREAA provided for entitlement to locality pay in the nonforeign areas while phasing out nonforeign area cost-of-living allowances (COLAs) authorized under 5 U.S.C. 5941(a)(1). Under section 1914 of Public Law 111–84, locality pay is phased in during a transition period beginning on the first day of the first pay period in January 2010 and ending on the first day of the first pay period in January 2012, hereafter referred to as the ''transition period.'' As locality pay increases, payable COLA rates must be reduced as specified in section 1912(b) of NAREAA. (See also 5 U.S.C. 5941(c), as amended by section 1912(b).) NAREAA also amended 5 U.S.C. 5941 to provide that a nonforeign area COLA must be paid as a percentage of basic pay, including any applicable locality-based comparability payment. (See 5 U.S.C. 5941(c)(4), as amended by NAREAA.)

Under section 1915(b)(1) of NAREAA, when locality pay for a nonforeign area is increased during the transition period, the increase in the minimum rate (step 1) of any grade of a special rate schedule under 5 U.S.C. 5305 must be increased by no less than the dollar increase in the locality payment for a non-special rate employee at the same grade and step and in the same location. Corresponding increases must be provided for all special rates at higher steps in the pay range for the given grade.

OPM determined a methodology for increasing special rates for General Schedule (GS) employees in nonforeign areas in conjunction with locality pay increases during the transition period that complies with the minimum requirements in section 1915(b)(1). OPM explained this methodology in a memorandum (CPM 2009–27) issued on December 30, 2009. (See *http://www.opm.gov/oca/compmemo/INDEX.asp.*) OPM calculates the dollar value of any locality pay increase for a non-special rate employee at each step rate and adds that dollar amount—referred to as an ''additional adjustment''—to the corresponding special rate that would apply but for this additional adjustment. This additional adjustment is equal to a constant percentage of the employee's GS base rate based on the applicable locality payment. For example, in 2010, when locality pay in all the nonforeign areas was set at 4.72 percent (one-third of the full 2010 ''Rest of U.S.'' locality rate of 14.16 percent), the special rate ''additional adjustment'' in all nonforeign areas equaled 4.72 percent of the applicable GS base rate.

As provided in section 1913(c) of NAREAA, OPM has temporarily raised the limitations on the amount of special rates to a higher level during the transition period ending on the first day of the first pay period beginning on or after January 1, 2012. In other words, during the transition period, an additional adjustment made under section 1915(b) would not be limited by the normally applicable Executive Schedule level IV (EX–IV) cap on special rates ($155,500 in 2011), as established under 5 U.S.C. 5305(a)(1). However, NAREAA section 1913(c) required that any special rate in excess of the EX–IV cap at the end of the transition period must be converted to a retained rate under 5 U.S.C. 5363. Such a converted retained rate would be in excess of the current EX–IV cap on retained rates found in 5 CFR 536.304(b)(3) and 536.306(a).

Some employees in nonforeign areas were entitled to retained rates during the transition period for reasons unrelated to NAREAA. On December 27, 2010, OPM issued a memorandum (CPM 2010–23) that provided special rules for adjusting retained rates under 5 U.S.C. 5363 for employees in nonforeign areas receiving COLAs during the transition period. These special rules were

authorized by NAREAA section 1918(a)(2).

Proposed Changes in Special Rate and Locality Rate Regulations

Normally, OPM computes a special rate supplement by adding a fixed-dollar amount or fixed percentage of the applicable GS base rate to all GS base rates within a rate range for a category of employees. However, adding an additional adjustment in nonforeign areas (as a result of NAREAA section 1915(b)(1)) provides a third way to compute special rate supplements by allowing a combination of a fixed-dollar supplement and a percentage-based additional adjustment. OPM proposes revising 5 CFR 530.304(c) to recognize the possibility of an alternate method for computing special rate supplements in nonforeign areas for special rate schedules established before January 1, 2012.

The regulations in 5 CFR 530.304(b) provide the circumstances OPM considers in evaluating the need for special rates. OPM proposes adding locality pay for the area involved and a nonforeign area COLA for the area involved as other circumstances for OPM to consider. OPM currently has the ability to consider ''any other circumstances OPM considers appropriate'' under 5 CFR 530.304(b)(4). However, specifically listing locality pay and nonforeign area COLA will make it explicit that these additional circumstances are appropriate for OPM to consider in evaluating the need for special rates. For similar reasons, we are proposing to amend 5 CFR 530.306(a) to add locality pay and COLA as factors that may be considered in evaluating a special rate proposal and in determining the level of special rates, as provided under 5 CFR 530.306(b)(1).

The regulations in 5 CFR 530.304 govern the establishment of a special rate schedule covering a category of employees in one or more areas or locations, grades or levels, occupational groups, series, classes, or subdivisions thereof. Certain provisions in NAREAA required increases in special rate schedules to levels beyond what may be justified to prevent significant recruitment or retention difficulties. Accordingly, OPM may consider reducing special rate schedules in nonforeign areas. Under these circumstances, and in light of the special regulatory authority provided in NAREAA section 1918(a)(1), we are proposing to add a new paragraph (e) in § 530.304, which would authorize OPM to establish a separate special rate schedule that temporarily maintains the higher special rates for current employees in a covered category—i.e., those covered by the given special rate schedule before the effective date of the schedule reduction. Employees in that same category who become employed in a nonforeign area after the effective date would be covered by the reduced special rate schedule. In other words, future hires would be covered by a lower special rate schedule established consistent with labor market conditions and other provisions of 5 U.S.C. 5305, while current employees would have ''grandfather'' coverage under a higher special rate schedule that would provide pay protection, but would be phased out over time.

The regulations in 5 CFR 530.308 list the purposes for which a special rate is considered a rate of basic pay. Section 530.308 specifically states that special rates are considered basic pay for the purpose of computing nonforeign area COLAs and post differentials. Section 530.308 also states that special rates are considered basic pay for the same purposes that locality pay is considered basic pay, as provided in 5 CFR 531.610. Currently, § 531.610 is silent regarding the treatment of locality pay as part of basic pay in computing nonforeign area COLAs, since, at the time the regulation was issued, locality pay was not payable in nonforeign areas or to any employee receiving a COLA. Section 531.610(g) does provide that a locality rate is considered a rate of basic pay for computing nonforeign area post differentials, but mentions only the scenario in which an employee is temporarily working in a nonforeign area when the employee's official worksite is located in a locality pay area because, at the time the regulation was issued, this was the only scenario in which locality pay was payable to an employee receiving a nonforeign area post differential. However, locality pay now applies to employees whose official worksites are located in a nonforeign area, and NAREAA specifically provided that nonforeign area COLA must be paid as a percentage of basic pay, including any applicable locality-based comparability payment. (See 5 U.S.C. 5941(c)(4) as amended by NAREAA.) Based on that law change, OPM is proposing to revise § 531.610 to reflect the fact that a locality rate must be used in computing nonforeign area COLAs. In addition, based on the original intent of the § 531.610(g) regulation and in light of the change in law to provide locality pay in nonforeign areas, OPM is proposing to revise § 531.610 to clarify that a locality rate is considered a rate of basic pay for the purpose of computing nonforeign area post differentials without any qualification. OPM is also proposing to make conforming changes in § 530.308. Using locality rates to compute nonforeign area post differentials is consistent with using locality rates to compute nonforeign area COLAs, which is required by law. It is also consistent with use of special rates in computing nonforeign area post differentials, and consistency in treatment of locality rates and special rates is a key objective underlying a number of OPM pay administration regulations.

Proposed Changes in Pay Retention Regulations

Under current pay retention regulations—specifically, 5 CFR 536.304(b)(3) and 536.306(a)—a retained rate is capped at EX–IV. However, as explained above, NAREAA allows for a special rate above EX–IV to be converted to an equal retained rate at the end of the transition period. Also, under NAREAA section 1918(a)(3), the Director of OPM is authorized to prescribe rules governing the establishment and adjustment of retained rates for any employee whose rate of pay exceeds applicable pay limitations beginning on the first day of the first pay period in January 2012. Accordingly, OPM is proposing to revise its pay retention regulations to allow a retained rate established based on a special rate payable in a nonforeign area that was in excess of the applicable limitation on special rates on January 1, 2012, to exceed the EX–IV limitation until the retained rate becomes equal to or falls below the EX–IV limitation.

Under current pay retention law and regulations, an employee is not eligible for pay retention if he or she was employed on a temporary or term basis immediately before the action causing a reduction in pay. (See 5 U.S.C. 5361(1) and 5 CFR 536.102(b)(2).) OPM is proposing to revise its pay retention regulations to allow an exception to this bar on eligibility in the case of a temporary or term employee in a nonforeign area who is receiving a special rate in excess of EX–IV at the end of the transition period. This proposal is consistent with NARREA section 1913(c), which requires that ''any special rate'' in excess of the applicable pay limitation be converted to a retained rate. Furthermore, NAREAA section 1918(a)(3) allows OPM to prescribe rules governing the establishment of retained rates for ''any employee'' whose rate of pay exceeds applicable pay limitations at the end of the transition period. In addition, OPM is authorized to extend pay retention

provisions to individuals not otherwise eligible under 5 U.S.C. 5365(b)(2).

OPM is also proposing to revise its pay retention regulations to include an additional exception allowing pay retention for a temporary or term employee who is receiving a special rate incorporating an ''additional adjustment'' under NAREAA section 1915(b)(1) in the event the employee's special rate schedule is reduced or terminated in the future. NAREAA section 1918(a)(1) authorizes OPM to prescribe rules for special rate employees described in NAREAA section 1913. Also, as already noted above, OPM is authorized to extend pay retention provisions to individuals not otherwise eligible under 5 U.S.C. 5365(b)(2).

The above-described changes in the pay retention regulations will be made in a proposed new § 536.310. That section will be removed once all affected employees have a retained rate at or below EX–IV or have lost entitlement to pay retention under 5 CFR 536.308.

OPM is not proposing to continue special retained rate adjustment rules described in CPM 2010–23 after the transition period. Those special adjustment rules were needed while locality pay was being increased by significant amounts (1/3rd phase-in in January 2010, 2/3rd phase-in in January 2011, and full phase-in in January 2012), resulting in corresponding large reductions in COLA payments. OPM believes a continuing exception to the statutory retained rate adjustment rule would not be appropriate. The NAREAA section 1918(a)(2) authority under which OPM established the special retained rate adjustment rules applies only during the transition period. After the transition period, agencies must use the retained rate adjustment rules in 5 U.S.C. 5363(b)(2)(B) and 5 CFR 536.305 to adjust an employee's retained rate, including a retained rate that is above EX–IV, when a pay schedule is adjusted.

Waiver of 60-Day Comment Period for Proposed Rulemaking

Pursuant to 5 U.S.C. 553(b)(3)(B), I find that good cause exists to waive the 60-day comment period for general notice of proposed rulemaking. Limiting the comment period for the proposed regulations to 45 days will enable OPM to issue final regulations by the time the transition period under NAREAA ends, which will ensure appropriate treatment of nonforeign area employees following the transition period and avoid administrative difficulties. Because of the reduced period for public comment, OPM will ensure that agency human resources officials, management groups, employee organizations representing Federal workers in the nonforeign areas, and congressional offices, are notified promptly once these regulations are published for public comment.

Issuance of final regulations before the end of the NAREAA transition period is necessary to ensure that certain employees will not experience reductions in pay when the transition period ends on January 1, 2012. For example, employees in nonforeign areas who are receiving special rates above level IV of the Executive Schedule (EX–IV) prior to January 1, 2012, must be converted to a retained rate under 5 U.S.C. 5363 on January 1, 2012, under NAREAA section 1913(c). Under current regulations implementing section 5363, retained rates are capped at EX–IV. However, NAREAA section 1918(a)(3) allows OPM to issue regulations under which normal retained rate limitations could be exceeded, and that is what these proposed regulations would do—thus, preventing a possible loss in pay. Similarly, regulation changes are necessary to allow certain temporary or time-limited appointees in nonforeign areas to receive a retained rate and avoid a reduction in pay.

Executive Order 13563 and Executive Order 12866

The Office of Management and Budget has reviewed this rule in accordance with E.O. 13563 and E.O. 12866.

Regulatory Flexibility Act

I certify that these regulations will not have a significant economic impact on a substantial number of small entities because they will apply only to Federal agencies and employees.

List of Subjects in 5 CFR Parts 530, 531 and 536

Administrative practice and procedure, Freedom of information, Government employees, Law enforcement officers, Reporting and recordkeeping requirements, Wages.

U.S. Office of Personnel Management.

John Berry,

Director.

Accordingly, OPM is proposing to amend 5 CFR parts 530, 531, and 536 as follows:

PART 530—PAY RATES AND SYSTEMS (GENERAL)

1. Revise the authority citation for part 530 to read as follows:

Authority: 5 U.S.C. 5305 and 5307; subpart C also issued under 5 U.S.C. 5338, sec. 4 of the Performance Management and Recognition System Termination Act of 1993 (Pub. L. 103–89), 107 Stat. 981, and sec. 1918 of Public Law 111–84, 123 Stat. 2619.

Subpart C—Special Rate Schedules for Recruitment and Retention

2. In § 530.304—

a. Remove ''or'' at the end of paragraph (b)(3);

b. Redesignate paragraph (b)(4) as (b)(6);

c. Add new paragraphs (b)(4) and (b)(5);

d. Revise paragraph (c); and

e. Add a new paragraph (e).

The revisions and additions read as follows:

§ 530.304 Establishing or increasing special rates.

* * * * *

(b) * * *

(4) Locality pay authorized under 5 U.S.C. 5304 for the area involved;

(5) A nonforeign area cost-of-living allowance authorized under 5 U.S.C. 5941(a)(1) for the area involved; or

* * * * *

(c) In setting the level of special rates within a rate range for a category of employees, OPM will compute the special rate supplement by adding a fixed dollar amount or a fixed percentage to all GS rates within that range, except that an alternate method may be used—

(1) For grades GS–1 and GS–2, where within-grade increases vary throughout the range; and

(2) In the nonforeign areas listed in 5 CFR 591.205 for special rate schedules established before January 1, 2012.

* * * * *

(e) Using its authority in section 1918(a)(1) of the Non-Foreign Area Retirement Equity Assurance Act of 2009 in combination with its authority under 5 U.S.C. 5305, OPM may establish a separate special rate schedule for a category of employees who are in GS positions covered by a nonforeign area special rate schedule in effect on January 1, 2012, and who are employed in a nonforeign area before an OPM-specified effective date. Such a separate schedule may be established if the existing special rate schedule is being reduced. An employee's coverage under the separate special rate schedule is contingent on the employee being continuously employed in a covered GS position in the nonforeign area after the OPM-specified effective date. Such a separate special rate schedule must be designed to provide temporary pay protection and be phased out over time until all affected employees are covered under the pay schedule that would otherwise apply to the category of employees in question.

3. In § 530.306—

a. Remove ''and'' at the end of paragraph (a)(8);

b. Remove the period at the end of paragraph (a)(9) and add ''; or'' in its place; and

c. Add a new paragraph (a)(10) to read as follows:

§ 530.306 Evaluating agency requests for new or increased special rates.

(a) * * *

(10) The level of any locality pay authorized under 5 U.S.C. 5304 and any nonforeign area cost-of-living allowance authorized under 5 U.S.C. 5941(a)(1) for the area involved.

* * * * *

4. In § 530.308—

a. Revise paragraph (a);

b. Remove paragraph (b); and

c. Redesignate paragraphs (c) and (d) as (b) and (c), respectively.

The revision reads as follows:

§ 530.308 Treatment of special rate as basic pay.

* * * * *

(a) The purposes for which a locality rate is considered to be a rate of basic pay in computing other payments or benefits to the extent provided by 5 CFR 531.610, except as otherwise provided in paragraphs (b) and (c) of this section;

* * * * *

PART 531—PAY UNDER THE GENERAL SCHEDULE

5. Revise the authority citation for part 531 to read as follows:

Authority: 5 U.S.C. 5115, 5307, and 5338; sec. 4 of Public Law 103–89, 107 Stat. 981; and E.O. 12748, 56 FR 4521, 3 CFR, 1991 Comp., p. 316; Subpart B also issued under 5 U.S.C. 5303(g), 5305, 5333, 5334(a) and (b), and 7701(b)(2); Subpart D also issued under 5 U.S.C. 5335 and 7701(b)(2); Subpart E also issued under 5 U.S.C. 5336; Subpart F also issued under 5 U.S.C. 5304, 5305, and 5941(a); E.O. 12883, 58 FR 63281, 3 CFR, 1993 Comp., p. 682; and E.O. 13106, 63 FR 68151, 3 CFR, 1998 Comp., p. 224.

Subpart F—Locality-Based Comparability Payment

6. In § 531.610, revise paragraph (g) to read as follows:

§ 531.610 Treatment of locality rate as basic pay.

* * * * *

(g) Nonforeign area cost-of-living allowances and post differentials under 5 U.S.C. 5941 and 5 CFR part 591, subpart B;

* * * * *

PART 536—GRADE AND PAY RETENTION

7. Revise the authority citation for part 536 to read as follows:

Authority: 5 U.S.C. 5361–5366; sec. 4 of the Performance Management and Recognition System Termination Act of 1993 (Pub. L. 103–89), 107 Stat. 981; § 536.301(b) also issued under 5 U.S.C. 5334(b); § 536.308 also issued under sec. 301(d)(2) of the Federal Workforce Flexibility Act of 2004 (Pub. L. 108–411), 118 Stat. 2305; § 536.310 also issued under sections 1913 and 1918 of the Non-Foreign Area Retirement Equity Assurance Act of 2009 (subtitle B of title XIX of Pub. L. 111–84), 123 Stat. 2619; § 536.405 also issued under 5 U.S.C. 552, Freedom of Information Act, Public Law 92–502.

Subpart C—Pay Retention

8. Add a new § 536.310 to read as follows:

§ 536.310 Exceptions for certain employees in nonforeign areas.

(a) Notwithstanding §§ 536.304(b)(3) and 536.306(a), an employee may receive a retained rate higher than Executive Schedule level IV if such employee is receiving a special rate in excess of Executive Schedule level IV on January 1, 2012, that is converted to a retained rate, consistent with section 1913 of the Non-Foreign Retirement Equity Assurance Act of 2009 (subtitle B of title XIX of Pub. L. 111–84). This paragraph ceases to apply when the retained rate becomes equal to or falls below Executive Schedule level IV or when the employee ceases to be entitled to pay retention under § 536.308.

(b) Notwithstanding 5 U.S.C. 5361(1) and § 536.102(b)(2), an employee who is employed on a temporary or term basis is not barred from receiving a retained rate if such employee—

(1) Is receiving a special rate above Executive Schedule level IV on January 1, 2012, and is covered by paragraph (a) of this section; or

(2) Is receiving a special rate incorporating an additional adjustment under section 1915(b)(1) of the Non-Foreign Retirement Equity Assurance Act (subtitle B of title XIX of Pub. L. 111–84) at the time the employee's special rate schedule is reduced or terminated.

[FR Doc. 2011–19361 Filed 7–29–11; 8:45 am]

BILLING CODE 6325–39–P

DEPARTMENT OF TRANSPORTATION

Federal Aviation Administration

14 CFR Part 39

[Docket No. FAA–2011–0720; Directorate Identifier 2010–NM–252–AD]

RIN 2120–AA64

Airworthiness Directives; Bombardier Inc. Model DHC–8–400 Series Airplanes

AGENCY: Federal Aviation Administration (FAA), DOT.

ACTION: Notice of proposed rulemaking (NPRM).

SUMMARY: We propose to adopt a new airworthiness directive (AD) for the products listed above. This proposed AD results from mandatory continuing airworthiness information (MCAI) originated by an aviation authority of another country to identify and correct an unsafe condition on an aviation product. The MCAI describes the unsafe condition as:

There has been one reported incident where the main landing gear (MLG) failed to extend during testing of the MLG alternate release system. Investigation revealed that the door release lever bushing was worn, causing an increase in the lateral movement of the release cable system. An increase in free-play within the release cable system would cause additional wear to the door release lever bushing and may lead to the turnbuckle fouling against the nacelle frame. The bushing wear at the door release lever and turnbuckle fouling could cause a failure in the alternate release system, preventing the landing gear from extending in the case of a failure of the normal MLG extension/retraction system.

* * * * *

The unsafe condition is loss of control during landing. The proposed AD would require actions that are intended to address the unsafe condition described in the MCAI.

DATES: We must receive comments on this proposed AD by September 15, 2011.

ADDRESSES: You may send comments by any of the following methods:

- *Federal eRulemaking Portal:* Go to *http://www.regulations.gov.* Follow the instructions for submitting comments.
- *Fax:* (202) 493–2251.
- *Mail:* U.S. Department of Transportation, Docket Operations, M–30, West Building Ground Floor, Room W12–140, 1200 New Jersey Avenue, SE., Washington, DC 20590.
- *Hand Delivery:* U.S. Department of Transportation, Docket Operations, M–30, West Building Ground Floor, Room W12–40, 1200 New Jersey

Avenue, SE., Washington, DC, between 9 a.m. and 5 p.m., Monday through Friday, except Federal holidays.

For service information identified in this proposed AD, contact Bombardier Inc., Q–Series Technical Help Desk, 123 Garratt Boulevard, Toronto, Ontario M3K 1Y5, Canada; telephone 416–375–4000; fax 416–375–4539; e-mail *thd.qseries@aero.bombardier.com;* Internet *http://www.bombardier.com.* You may review copies of the referenced service information at the FAA, Transport Airplane Directorate, 1601 Lind Avenue, SW., Renton, Washington. For information on the availability of this material at the FAA, call 425–227–1221.

Examining the AD Docket

You may examine the AD docket on the Internet at *http://www.regulations.gov;* or in person at the Docket Operations office between 9 a.m. and 5 p.m., Monday through Friday, except Federal holidays. The AD docket contains this proposed AD, the regulatory evaluation, any comments received, and other information. The street address for the Docket Operations office (telephone (800) 647–5527) is in the **ADDRESSES** section. Comments will be available in the AD docket shortly after receipt.

FOR FURTHER INFORMATION CONTACT: Fabio Buttitta, Aerospace Engineer, Airframe and Mechanical Systems Branch, ANE–171, FAA, New York Aircraft Certification Office, 1600 Stewart Avenue, Suite 410, Westbury, New York 11590; telephone (516) 228–7303; fax (516) 794–5531.

SUPPLEMENTARY INFORMATION:

Comments Invited

We invite you to send any written relevant data, views, or arguments about this proposed AD. Send your comments to an address listed under the **ADDRESSES** section. Include ''Docket No. FAA–2011–0720; Directorate Identifier 2010–NM–252–AD'' at the beginning of your comments. We specifically invite comments on the overall regulatory, economic, environmental, and energy aspects of this proposed AD. We will consider all comments received by the closing date and may amend this proposed AD based on those comments.

We will post all comments we receive, without change, to *http://www.regulations.gov,* including any personal information you provide. We will also post a report summarizing each substantive verbal contact we receive about this proposed AD.

Discussion

Transport Canada Civil Aviation (TCCA), which is the aviation authority for Canada, has issued Canadian Airworthiness Directive CF–2010–26, dated August 17, 2010 (referred to after this as ''the MCAI''), to correct an unsafe condition for the specified products. The MCAI states:

> There has been one reported incident where the main landing gear (MLG) failed to extend during testing of the MLG alternate release system. Investigation revealed that the door release lever bushing was worn, causing an increase in the lateral movement of the release cable system. An increase in free-play within the release cable system would cause additional wear to the door release lever bushing and may lead to the turnbuckle fouling against the nacelle frame. The bushing wear at the door release lever and turnbuckle fouling could cause a failure in the alternate release system, preventing the landing gear from extending in the case of a failure of the normal MLG extension/retraction system.
>
> This directive is to mandate the incorporation of a new maintenance task to prevent excessive free-play of the turnbuckle and cable within the alternate release system.

The unsafe condition is loss of control during landing. You may obtain further information by examining the MCAI in the AD docket.

Relevant Service Information

Bombardier has issued Temporary Revision (TR) MRB–46, dated February 4, 2010, to Section 1–32, Systems/Powerplant Maintenance Program, of the Maintenance Review Board (MRB) Report Part 1, of the Bombardier Q400 Dash 8 Maintenance Requirements Manual, PSM 1–84–7. The actions described in this service information are intended to correct the unsafe condition identified in the MCAI.

FAA's Determination and Requirements of This Proposed AD

This product has been approved by the aviation authority of another country, and is approved for operation in the United States. Pursuant to our bilateral agreement with the State of Design Authority, we have been notified of the unsafe condition described in the MCAI and service information referenced above. We are proposing this AD because we evaluated all pertinent information and determined an unsafe condition exists and is likely to exist or develop on other products of the same type design.

Differences Between This AD and the MCAI or Service Information

We have reviewed the MCAI and related service information and, in general, agree with their substance. But we might have found it necessary to use different words from those in the MCAI to ensure the AD is clear for U.S. operators and is enforceable. In making these changes, we do not intend to differ substantively from the information provided in the MCAI and related service information.

We might also have proposed different actions in this AD from those in the MCAI in order to follow FAA policies. Any such differences are highlighted in a NOTE within the proposed AD.

Costs of Compliance

Based on the service information, we estimate that this proposed AD would affect about 65 products of U.S. registry. We also estimate that it would take about 1 work-hour per product to comply with the basic requirements of this proposed AD. The average labor rate is $85 per work-hour. Based on these figures, we estimate the cost of the proposed AD on U.S. operators to be $5,525, or $85 per product.

Authority for This Rulemaking

Title 49 of the United States Code specifies the FAA's authority to issue rules on aviation safety. Subtitle I, section 106, describes the authority of the FAA Administrator. ''Subtitle VII: Aviation Programs,'' describes in more detail the scope of the Agency's authority.

We are issuing this rulemaking under the authority described in ''Subtitle VII, Part A, Subpart III, Section 44701: General requirements.'' Under that section, Congress charges the FAA with promoting safe flight of civil aircraft in air commerce by prescribing regulations for practices, methods, and procedures the Administrator finds necessary for safety in air commerce. This regulation is within the scope of that authority because it addresses an unsafe condition that is likely to exist or develop on products identified in this rulemaking action.

Regulatory Findings

We determined that this proposed AD would not have federalism implications under Executive Order 13132. This proposed AD would not have a substantial direct effect on the States, on the relationship between the national Government and the States, or on the distribution of power and responsibilities among the various levels of government.

For the reasons discussed above, I certify this proposed regulation:

1. Is not a ''significant regulatory action'' under Executive Order 12866;

2. Is not a ''significant rule'' under the DOT Regulatory Policies and Procedures (44 FR 11034, February 26, 1979); and

3. Will not have a significant economic impact, positive or negative, on a substantial number of small entities under the criteria of the Regulatory Flexibility Act.

We prepared a regulatory evaluation of the estimated costs to comply with this proposed AD and placed it in the AD docket.

List of Subjects in 14 CFR Part 39

Air transportation, Aircraft, Aviation safety, Incorporation by reference, Safety.

The Proposed Amendment

Accordingly, under the authority delegated to me by the Administrator, the FAA proposes to amend 14 CFR Part 39 as follows:

PART 39—AIRWORTHINESS DIRECTIVES

1. The authority citation for part 39 continues to read as follows:

Authority: 49 U.S.C. 106(g), 40113, 44701.

§ 39.13 [Amended]

2. The FAA amends § 39.13 by adding the following new AD:

Bombardier Inc.: Docket No. FAA–2011–0720; Directorate Identifier 2010–NM–252–AD.

Comments Due Date

(a) We must receive comments by September 15, 2011.

Affected ADs

(b) None.

Applicability

(c) This AD applies to Bombardier Inc. Model DHC–8–400, –401, and –402 airplanes, certificated in any category, having serial numbers 4001 and subsequent.

Subject

(d) Air Transport Association (ATA) of America Code 32: Landing Gear.

Reason

(e) The mandatory continuing airworthiness information (MCAI) states:

There has been one reported incident where the main landing gear (MLG) failed to extend during testing of the MLG alternate release system. Investigation revealed that the door release lever bushing was worn, causing an increase in the lateral movement of the release cable system. An increase in free-play within the release cable system would cause additional wear to the door release lever bushing and may lead to the turnbuckle fouling against the nacelle frame. The bushing wear at the door release lever and turnbuckle fouling could cause a failure in the alternate release system, preventing the landing gear from extending in the case of a failure of the normal MLG extension/retraction system.

* * * * *

The unsafe condition is loss of control during landing.

Compliance

(f) You are responsible for having the actions required by this AD performed within the compliance times specified, unless the actions have already been done.

Actions

(g) Within 30 days after the effective date of this AD, revise the maintenance program by incorporating Task 323400–203 specified in Bombardier Temporary Revision (TR) MRB–46, dated February 4, 2010, to Section 1–32, Systems/Powerplant Maintenance Program, of the Maintenance Review Board (MRB) Report Part 1, of the Bombardier Q400 Dash 8 Maintenance Requirements Manual, PSM 1–84–7. The initial compliance time for the actions specified in Bombardier TR MRB–46, dated February 4, 2010, is within 6,000 flight hours after the effective date of this AD. Thereafter, operate the airplane according to the procedures and compliance times in Bombardier TR MRB–46, dated February 4, 2010.

No Alternative Actions, Intervals, and/or Critical Design Configuration Control Limitations (CDCCLs)

(h) After accomplishing the revision required by paragraph (g) of this AD, no alternative actions (*e.g.,* inspections), intervals, and/or CDCCLs may be used unless the actions, intervals, and/or CDCCLs are approved as an alternative method of compliance (AMOC) in accordance with the procedures specified in paragraph (i) of this AD.

FAA AD Differences

Note 1: This AD differs from the MCAI and/or service information as follows: No differences.

Other FAA AD Provisions

(i) The following provisions also apply to this AD:

(1) *Alternative Methods of Compliance (AMOCs):* The Manager, New York Aircraft Certification Office (ACO), ANE–170, FAA, has the authority to approve AMOCs for this AD, if requested using the procedures found in 14 CFR 39.19. In accordance with 14 CFR 39.19, send your request to your principal inspector or local Flight Standards District Office, as appropriate. If sending information directly to the New York ACO, Send it to ATTN: Program Manager, Continuing Operational Safety, 1600 Stewart Avenue, Suite 410, Westbury, NY 11590; telephone 516–228–7300; fax 516–794–5531. Before using any approved AMOC, notify your appropriate principal inspector, or lacking a principal inspector, the manager of the local flight standards district office/certificate holding district office. The AMOC approval letter must specifically reference this AD.

(2) *Airworthy Product:* For any requirement in this AD to obtain corrective actions from a manufacturer or other source, use these actions if they are FAA-approved. Corrective actions are considered FAA-approved if they are approved by the State of Design Authority (or their delegated agent). You are required to assure the product is airworthy before it is returned to service.

Related Information

(j) Refer to MCAI Canadian Airworthiness Directive CF–2010–26, dated August 17, 2010; and Bombardier Temporary Revision MRB–46, dated February 4, 2010, to Section 1–32, Systems/Powerplant Maintenance Program, of the Maintenance Review Board Report Part 1, of the Bombardier Q400 Dash 8 Maintenance Requirements Manual, PSM 1–84–7; for related information.

Issued in Renton, Washington, on July 22, 2011.

Ali Bahrami,

Manager, Transport Airplane Directorate, Aircraft Certification Service.

[FR Doc. 2011–19330 Filed 7–29–11; 8:45 am]

BILLING CODE 4910–13–P

FEDERAL TRADE COMMISSION

16 CFR Part 305

[RIN 3084–AB03]

Appliance Labeling Rule

AGENCY: Federal Trade Commission (FTC or Commission).

ACTION: Proposed rule.

SUMMARY: The Commission proposes to expand coverage of the Lighting Facts label to include all screw-based and GU–10 and GU–24 pin-based light bulbs. Under this proposal, manufacturers would have 2½ years to conform their products and packaging to the labeling requirements. The Commission also proposes to require a specific test procedure (LM–79) for measuring light output for all light emitting diode (LED) bulbs covered by the Rule. Finally, the Commission is not proposing amendments for several other issues such as watt-equivalent standards, directional light disclosures, and lead content disclosures.

DATES: Written comments must be received on or before September 22, 2011.

ADDRESSES: Interested parties may file a comment online or on paper, by following the instructions in the Request for Comment part of the **SUPPLEMENTARY INFORMATION** section below. Write ''Notice of Proposed Rulemaking on Expanded Bulb Coverage for the Lighting Facts Label (16 CFR part 305) (Project No. P084206)'' on your comment, and file your comment online at *https://ftcpublic.commentworks.com/ftc/lampcoveragenprm,* by following the

instructions on the web-based form. If you prefer to file your comment on paper, mail or deliver your comment to the following address: Federal Trade Commission, Office of the Secretary, Room H–113 (Annex Y), 600 Pennsylvania Avenue, NW., Washington, DC 20580.

FOR FURTHER INFORMATION CONTACT: Hampton Newsome, Attorney, Division of Enforcement, Bureau of Consumer Protection, Federal Trade Commission, 600 Pennsylvania Avenue, NW., Washington, DC 20580, (202) 326–2889.

SUPPLEMENTARY INFORMATION:

I. Background

On July 19, 2010 (75 FR 41696), the Commission published new light bulb [1] labeling requirements and sought comments on several unresolved issues related to those requirements.[2] The new requirements, which amend the Appliance Labeling Rule, 16 CFR part 305 (''Rule''), feature a ''Lighting Facts'' label that discloses information about the bulb's brightness, annual energy cost, life, color appearance, and energy use.[3] The Commission also sought additional comment on the following unresolved issues: the label's product coverage, light-emitting diode (LED) test procedures, watt-equivalence claims, beam spread and directional light disclosures, lead content disclosures, bilingual labels, fossil fuel lamp labels, and power factor disclosures. The Commission sought comment on these issues in response to the Congressional directive to consider reopening the labeling rulemaking in 2011 if the Commission determines that further labeling changes are necessary.[4]

II. Proposed Amendments

Consistent with Congress' directive, the Commission is now reopening the light bulb labeling rulemaking to seek comments on proposed amendments to the Rule. Specifically, the Commission proposes to expand label coverage to additional styles of bulbs and to require a specific test procedure requirement for LED bulb labels. The comments received in response to the July 2010 Notice suggest that these changes will help consumers with their purchasing decisions.[5] As discussed in section III, the Commission is not proposing amendments related to any other issues raised in the July 2010 Notice.

A. Expanded Light Bulb Label Coverage

The Commission proposes to expand label coverage beyond medium screw-based products [6] to include all screw-based bulbs and GU–10 and GU–24 pin-based bulbs because expanded coverage will provide consumers uniform information, such as energy cost, brightness, and bulb life, to help them with their lighting decisions.[7] In imposing these requirements, the Commission plans to give manufacturers at least two and a half years to change their packaging to incorporate the new labels. As explained below, the Commission also seeks comment on the Rule's existing exclusions for specialty bulbs (*e.g.,* bug, marine, and mine service lamps) and requiring the Lighting Facts labels for general service fluorescent lamp packages.

In response to the July 2010 Notice, several energy efficiency groups recommended, while industry members opposed, expanding coverage to include all screw-based models, including intermediate and candelabra based models, and GU–10 and GU–24 pin-based models. The energy efficiency groups argued that such expanded label coverage would help consumers choose among bulbs with varying light output, energy efficiency, and other factors.

Specifically, the Natural Resources Defense Council (NRDC) argued that the new label should appear on packages for all screw-based models to ensure that the same information, in the form of the new label, appears on most light bulbs. In its view, the label's consistent disclosures for energy cost, brightness, life, color temperature, and watts will help consumers choose products with the characteristics they seek. According to the NRDC, consumers need the same basic light bulb information regardless of the product's shape (*e.g.,* pear, globe, flame, or spiral), base (*e.g.,* small, medium, or large diameter), or technology (*e.g.,* incandescent, halogen, LED, CFL, *etc.*).[8] Although medium screw bases are the most common type of consumer lamp, NRDC identified a wide variety of lamps which use candelabra and intermediate bases. During informal visits to retail stores, NRDC observed that these bulbs can range from 2 watts to 100 watts, fit many different applications including chandeliers, night lights, ceiling fans, and halogen fixtures, and use traditional incandescent, halogen, CFL, or LED technology.[9] NRDC also identified wide differences in the light output among these products, arguing that labeling them would ensure a level playing field for industry. Finally, NRDC noted that packages for these products generally have room for the new FTC label.

The Consortium for Energy Efficiency (CEE) also urged labeling for candelabra-based bulbs but added a recommendation for pin-based (GU–24 and GU–10) lamps. In its view, expanding labeling coverage to additional styles of bulbs will better inform consumers about relative product performance and avoid confusion that could be caused by requiring the Lighting Facts label for some products but not others. CEE explained that, because these products can vary significantly in light output, energy use, and other characteristics, the label will be helpful to consumers. For example, current incandescent

[1] This document uses the terms lamp, light bulb, and bulb interchangeably.

[2] The Energy Independence and Security Act of 2007 (EISA) directed the Commission to examine existing light bulb labeling requirements. Public Law 110–140. EISA amended the Energy Policy and Conservation Act (EPCA) (42 U.S.C. 6291 *et seq.*).

[3] The requirements also direct manufacturers to print lumen information and, where appropriate, a mercury disclosure on the products themselves.

[4] 42 U.S.C. 6294(a)(2)(D)(iii)(II)(bb).

[5] See *http://www.ftc.gov/os/comments/lamplabelingfinal/index.shtm.* Unless otherwise stated, comments discussed in this document refer to the following: Anderson (# 549189–00015); Alliance to Save Energy (including American Council for an Energy-Efficient Economy, Appliance Standards Awareness Project, Consumer Federation of America, Midwest Energy Efficiency Alliance, Northeast Energy Efficiency Partnerships, Northwest Power and Conservation Council, and Southeast Energy Efficiency Alliance) (# 549189–00018); Bell (# 549189–00003); CEE (# 549189–00019); Cree, Inc. (# 549189–00022); Fountain (# 549189–00016); Fritz (# 549189–00008); Grosslight (# 549189–00011); Krause (# 549189–00010); Meirowsky (# 549189–00004) (# 549189–00005); Moratti (# 549189–00009); Naim (# 549189–00014); Natural Resources Defense Council (# 549189–00013) (# 549189–00020); National Electrical Manufacturers Association (# 549189–00021); OSRAM SYLVANIA (# 549189–00017); Puckett (# 549189–00002); and St. Peter (# 549189–00012).

[6] Currently, the new label covers all general service lamps (i.e., medium screw-based incandescent, compact fluorescent [CFL], and LED products).

[7] The Commission proposes this expanded coverage pursuant to 42 U.S.C. 6294(a)(6) of EPCA, which gives the Commission authority to require disclosures for consumer products ''not specified'' under existing labeling requirements if the Commission ''determines that labeling for the product is likely to assist consumers in making purchasing decisions.'' EPCA defines ''consumer product'' as any article (other than an automobile) which ''in operation consumes, or is designed to consume energy'' and ''which, to any significant extent is distributed in commerce for personal use or consumption by an individual.'' 42 U.S.C. 6291(1). The Commission recently relied on this authority in requiring labels for LED bulbs, reflector lamps, and three-way lamps. 75 FR 41696, 41698 (Jul. 19, 2010).

[8] The Alliance to Save Energy also argued that no reason exists to exclude some screw-based bulbs from the label and not others. In its view, such inconsistency adds to consumer confusion when purchasing lighting products.

[9] NRDC included several examples of night lights, candelabra bulbs, and chandelier bulbs. In one instance, it observed two nearly-identical 60W flame shaped lamps being sold next to each, one with a conventional medium screw base, the other with a smaller, candelabra base.

candelabra-based bulbs generally draw 25–60 watts per lamp and thus have a broad range of energy costs. These products also occupy a significant market share, according to CEE estimates, with candelabra-based products comprising roughly 9% of bulbs sold. Similarly, pin-based CFLs, which also appear in various wattages, comprise roughly 8% of the CFLs in the U.S. in 2008 (approximately 28.3 million lamps) according to CEE estimates.[10] CEE observed that candelabra and pin-based lamps appear in varied light outputs, lifetimes, and color temperatures, suggesting such label information will help consumer purchasing decisions.[11] Finally, CEE recommended that the FTC minimize the burden of expanded label coverage by providing manufacturers with more time to incorporate changes into their normal production and design schedules.[12]

In contrast, the National Electrical Manufacturers Association (NEMA) opposed expanded label coverage. NEMA explained that because intermediate and candelabra-based bulbs use less energy than medium screw base bulbs on a daily basis and appear only in a few household locations such as bathrooms, dining rooms, and some outdoor lighting decorative fixtures, they do not warrant labeling.[13] NEMA also argued that intermediate and candelabra based bulbs produced using differing technologies (*e.g.,* incandescent, CFL, and LED) do not necessarily have the same functionality, and thus are not always direct substitutes for each other, presumably decreasing the comparative benefits of the FTC label. For example, most CFL replacements do not dim and may not provide the same ''sparkle'' sought by consumers. NEMA also asserted that consumers are likely to purchase intermediate and candelabra bulbs based on aesthetic shape, fit, and maximum wattage of their existing sockets, not on the information provided by the new labels. Finally, NEMA argued that packages for intermediate and candelabra bulbs (often cardboard sheets with plastic bulb covers) have little or no room for the new label.

After considering the comments, the Commission finds the energy efficiency group recommendations for expanding coverage more persuasive than NEMA's arguments opposing them.[14] Contrary to NEMA's assertions, expanded labeling is likely to help consumers compare the variations in energy use, technology, and performance of these products. Specifically, these products can use significant amounts of energy compared to other lighting products. For example, as detailed by the comments, candelabra and intermediate-based incandescent bulbs are likely to draw significantly more watts than their CFL and LED counterparts. These bulbs also may draw more watts than larger, medium-based CFLs and LEDs. In addition, while competing technologies may not be available for some of these bulbs, that is not always the case,[15] and the development of additional competing technologies is likely in the future. Also, given the relatively high wattage and light output variation among these products, consumers are likely to consider the label's light output, energy cost, life, and other disclosures even if, as NEMA states, they also are concerned with other factors such as shape, fit, and maximum wattage. In fact, as indicated by other comments, performance characteristics for these bulbs vary significantly, strongly suggesting that the FTC label, which highlights such variations, will be relevant to many consumers. And, although typical usage patterns (*e.g.,* hours per day of operation) may vary for these products, the standard usage assumption on the Lighting Facts label (*i.e.,* three hours per day) will provide consumers a consistent method to compare performance. Finally, though NEMA raised concerns about package size, the Rule already addresses space limitation issues by allowing an alternative text-only label for packages with less than 24 inches of printable space.[16]

To expand the label's coverage to additional styles of bulbs, the Commission proposes to amend the definition of ''general service lamp'' to cover all screw-based incandescent, CFL, and LED lamps, eliminate existing exclusions for specific bulb shapes generally available to consumers, and make other minor, conforming changes consistent with this proposal.[17] Currently, the definition excludes G shape lamps (as defined in ANSI C78.20–2003 and C79.1–2002) with a diameter of 5 inches or more; T shape lamps (as defined in ANSI C78.20–2003 and C79.1–2002) that use not more than 40 watts or have a length of more than 10 inches; and B, BA, CA, F, G16–1/2, G–25, G30, S, or M–14 lamps (as defined in ANSI C79.1–2002 and ANSI C78.20–2003) of 40 watts or less.

The Commission seeks comment on this proposal, particularly whether the Rule should retain existing exclusions for the particular shapes described above.[18] Please also provide detailed reasons for all comments. In preparing responses, commenters should review carefully the proposed revisions to the definition of ''general service lamp'' at the end of this notice. In addition, the Commission requests that comments address whether the Commission should retain existing exclusions for special-use bulbs including appliance lamps as defined at 42 U.S.C. 6291(30); black light lamps; bug lamps; colored lamps as defined at 42 U.S.C. 6291(30); infrared lamps; left-hand thread lamps; marine lamps; marine signal service lamp; mine service lamp; plant light lamps; rough service lamps as defined at 42 U.S.C. 6291(30); shatter-resistant lamps (including shatter-proof lamps and a shatterprotected lamps); sign service lamps; silver bowl lamps; showcase lamps; traffic signal lamps; and vibration service lamps as defined at 42 U.S.C. 6291(30). In addressing label coverage for these specialty bulbs or for any particular bulb shape, comments should indicate whether such bulbs are distributed, to any significant

[10] The Commission recently declined to require the new label for 75-watt incandescent bulbs, which represent about ⅕ of the incandescent market. 76 FR 20233 (Apr. 12, 2011). However, unlike pin-based CFLs, 75-watt incandescent bulbs will be phased out by 2013 efficiency standards.

[11] For example, according to CEE, ENERGY STAR-qualified GU–24 products demonstrate light output ranges from 547–2703 lumens, power draw from 9–42 watts, lifetime from 8,000–12,000 hours, and color temperature from 2700–6500 Kelvin.

[12] CEE's suggestion is consistent with concerns recently raised by industry members about the effective date for labels on medium screw base bulbs. See 75 FR 81943 (Dec. 29, 2010) (NEMA petition to extend effective date for implementation of the Lighting Facts label).

[13] NEMA explained that EISA already limits the wattage of these bulbs to 40W for intermediate-based and 60W for candelabra-based bulbs, implying that labeling is not necessary for these products because of their limited wattages and corresponding energy costs. NEMA acknowledges that a few bulb types do consume more energy (e.g., 500w DE bulb) but states that these type bulbs do not have any energy efficient alternatives for consumers to choose from.

[14] Consistent with existing requirements, the expanded bulb coverage would also apply to disclosures for bulbs sold through websites and paper catalogs. See 16 CFR 305.20.

[15] For instance, as suggested by NRDC, chandelier bulbs are commonly sold in CFL and incandescent versions.

[16] In calculating such space, manufacturers should exclude the package area occupied by the bulbs themselves and the plastic necessary to cover them.

[17] The amendment to the definition of ''general service lamp'' also clarifies that the Lighting Facts label applies to lamps that are ''consumer products'' as defined by EPCA (42 U.S.C. 6291(1)).

[18] Comments should also address whether these products will have space available for the disclosures required on the products themselves (*e.g.,* lumens and mercury disclosure). In addition, comments should address whether test procedures are available for measuring light output, energy use, life, and color temperature for these products.

extent, for personal use or consumption by consumers.

Finally, commenters should address whether the Lighting Facts label should appear on the package of general service fluorescent lamps.[19] Currently, the Rule requires an encircled ''E'' on the package of these lamps to denote compliance with federal efficiency standards. When it issued this requirement in 1994, the Commission declined to require more detailed disclosures (*e.g.,* lumens, life, *etc.*) because of similarities in the characteristics of competing general service fluorescent lamps.[20] The Commmission asks now whether it should reconsider this decision and, if so, why. In particular, comments should address the extent to which these products are sold to consumers in the residential market, the amount of energy such products use, the variability in energy use between comparable products, the burdens associated with such label changes, and the likelihood the new label information would help consumers in their purchasing decisions for these products.

B. LED Test Procedure

Based on unchallenged support in the comments, the Commission proposes to require a specific test procedure, IES–LM–79–2008 (LM–79), for measuring LED light output and color characteristics to help ensure consistent label content. The July 2010 Notice identified this procedure as a ''safe harbor,'' allowing manufacturers to use LM–79 as a reasonable basis for LED light output claims. Now, the Commission proposes to make the procedure mandatory and provide manufacturers one year to begin using the procedure as the basis for their label information for LED bulbs. The Commission seeks comment on this proposal.

Comments provided convincing support for the adoption of LM–79.[21] CEE argued that an FTC requirement for LM–79 would create more consistency in the market. It explained that the procedure offers the only test available to measure LED products, given their unique properties. CEE also noted that representatives of industry, research institutions, and test laboratories contributed to its development and that the ENERGY STAR program has incorporated LM–79 into its specifications. Cree, Inc., also explained that most manufacturers know the LM–79 procedures, test labs conduct these measurements, and, in the commercial market at least, consumers are looking for this test data when they purchase LED bulbs.

III. Issues Not Included in Proposed Amendments

After reviewing the comments submitted in response to the July 2010 Notice, the Commission is not proposing any new requirements for watt-equivalence standards, beam spread disclosures, directional light disclosures, lead content disclosures, bilingual labels, fossil fuel lamp labels, and power factor at this time.[22] Unless stated otherwise, the Commission is not seeking additional comments on these issues.

A. Watt-Equivalence Claims

The Commission is not proposing standards for watt-equivalence claims because such requirements may inhibit helpful, truthful representations, and thus may not necessarily help consumers in their bulb purchasing decisions. Nevertheless, manufacturers should heed the Commission's earlier recommendation to use ENERGY STAR equivalence benchmarks for general guidance in developing their watt-equivalence claims.[23]

Watt-equivalence claims often appear on CFL packages and generally contain conspicuous comparisons of the CFL's light output to equivalent incandescent lamps (*e.g.,* ''this bulb is a '60-watt' equivalent'' or ''13W=60W''). In the June 2010 Notice, the Commission sought comment on establishing mandatory, watt-equivalence requirements for these claims.[24]

The comments offered conflicting views. NRDC suggested the Commission set standards to mandate consistency in watt-equivalence claims on light bulb packages. In particular, NRDC, which provided several examples of problematic watt-equivalence claims, urged the Commission to use the ENERGY STAR watt-equivalence benchmarks in that program's CFL specifications. It also noted that the European Union has already adopted such standards. Additionally, NRDC urged standards for reflector lamps separate from those for conventional incandescent bulbs. NEMA also supported standards but, as an alternative, recommended the Commission impose a blanket prohibition on all watt-equivalence claims. Such a prohibition, in NEMA's view, would shift consumers away from using older, nearly obsolete technology as the basis for their bulb comparisons.

Conversely, Cree, Inc. argued that strict standards may actually encourage watt-equivalence claims and cause continued consumer reliance on power as a shorthand for light output. Cree, Inc. also argued that watt-equivalence comparisons should take into account factors other than light output such as light quality and distribution. According to Cree, Inc., products with identical light outputs and color temperature may actually appear to be substantially different to consumers because of factors such as color rendition index, light distribution, and color point location.

After considering these comments, the Commission is not proposing watt-equivalence standards at this time. As discussed by the Commission in the July 2010 Notice, the ENERGY STAR benchmarks provide important guidance, but they may not be applicable in every case.[25] Variables such as color appearance and other factors discussed in the comments make it difficult to apply a ''one-size-fits-all'' approach. Indeed, rigid equivalence standards could inhibit truthful claims. For example, while typical 60-watt incandescent bulbs have an 800-lumen rating, some 60-watt bulbs that have a cooler light appearance, could have lower lumen ratings (*e.g.,* 675 lumens). A strict legal standard requiring at least 800 lumens for all 60-watt comparisons would prohibit such claims for those cooler, dimmer (*e.g.,* 675 lumens) bulbs even though they are truthful.[26] The

[19] One commenter, Meirowsky, suggested that the Commission label these products but did not provide details.

[20] 59 FR 25176, 25197 (May 13, 1994).

[21] See NEMA, CEE, and Cree, Inc.

[22] The Commission also received comments on issues already addressed by the Final Rule notice (*e.g.,* bulb life disclosures, mercury disclosures, color rendering index, and dimmers) and issues not identified for comment in that notice (*e.g.,* operating temperature disclosures). This Notice does not address those issues because the Commission has already considered them earlier or because they are not relevant to the issues currently under consideration.

[23] 75 FR at 41701.

[24] *Id.*

[25] *Id.*

[26] EPCA authorizes the Commission to consider ''alternative labeling approaches that will help consumers to understand new high-efficiency lamp products and to base the purchase decisions of the consumers on the most appropriate source that meets the requirements of the consumers for lighting level, light quality, lamp lifetime, and total lifecycle cost.'' 42 U.S.C. 6294(a)(2)(D)(iii). Although EPCA gives the FTC authority to require affirmative energy disclosures on packages and products, the statute does not indicate that the FTC has authority to prohibit what are otherwise truthful, substantiated claims. Under § 5 of the FTC Act, the Commission has authority to prohibit deceptive and unfair claims. 15 U.S.C. 45(a)(1). There is no evidence that the watt-equivalence claims discussed here are categorically deceptive or unfair. In fact, as the Commission has acknowledged previously (74 FR 57950, 57955 (Nov. 10, 2009)), watt-equivalence claims may be useful to consumers as they transition toward using

comments did not address these concerns in any detail.

However, even in the absence of rigid watt-equivalence standards, manufacturers must ensure they can substantiate their watt-equivalence claims. The comments highlight the need for manufacturers to ensure their watt-equivalence claims are not deceptive. In particular, manufacturers must take into account the brightness of the bulbs they are comparing, as well as other material factors such as light appearance (*i.e.,* color temperature). To help manufacturers with these claims, the ENERGY STAR program has issued watt-equivalence standards that provide general benchmarks for comparing the light output of traditional incandescents to CFLs. In the short run, the Commission recommends that manufacturers adhere to the benchmarks in the ENERGY STAR watt-equivalence guidelines (see Table 1 below) unless they have a reasonable basis for a different equivalence standard. Simply put, if a manufacturer's claim is inconsistent with the ENERGY STAR benchmarks, it must possess another competent and reliable basis to substantiate its claims and should consider clearly qualifying its claims to avoid deception. Deceptive watt-equivalence comparisons are subject to FTC law enforcement actions under § 5 of the FTC Act.

TABLE 1—ENERGY STAR WATT-EQUIVALENCE BENCHMARKS

A-shaped incandescent bulb	Typical luminous flux (lumens)
25	250
40	450
60	800
75	1,100
100	1,600
125	2,000
150	2,600
30–70–100	1,200
50–100–150	2,150

Note: Does not apply to globes, reflectors, or decorative CFLs. Lumens for 3-way lamps correspond to maximum equivalence shown.

In the long run, as more high-efficiency products appear and older incandescent technology leaves the market, watt-equivalence comparisons will have decreasing relevance to consumers. As equivalence claims recede, lumens will continue to provide a clear, consistent measurement for light output. However, consumer transition from watts to lumens will take time. The Commission encourages manufacturers to focus their communication efforts on lumens to help consumers with their lighting decisions. Eventually, consumer education, coupled with the phase-out of old incandescent bulbs, will help consumers look to lumens, not to obsolete watt-equivalence claims to evaluate bulb brightness.

B. Beam Spread and Directional Light Disclosure

The Commission is not proposing requirements for beam spread or directional light disclosures because the need for such mandatory disclosures to help consumers is unclear. In particular, no consistent definition exists for beam spread across different bulb types and the need for mandatory directional light disclosures is uncertain.

NEMA's comments opposed a beam spread disclosure because definitions of beam spread vary among different bulb types (*e.g.,* reflector and PAR [parabolic aluminized reflector] products). In addition, NEMA asserted that most residential consumers do not understand beam spread terminology. NEMA also indicated that commercial consumers and lighting designers generally obtain beam spread information from manufacturer catalogs, not from packages, thus suggesting that beam spread information on label packages would not be particularly helpful. No other commenter specifically addressed this issue. The Commission does not plan to pursue it further at this time.

NEMA and Cree, Inc. supported a directional light disclosure, arguing it would be useful to consumers and use little space on the package. In particular, NEMA recommended Center Beam Candlepower (CBCP) (*i.e.,* brightness at the center of the beam) for the directional disclosure on packaging for reflector lamps, including PARs. Cree, Inc. added that the label should disclose beam angle (either a specific angle or a category such as spot, flood, etc.).

Despite support in the comments, the Commission is not proposing to require CBCP disclosures at this time because nothing on the record suggests such information is familiar to typical consumers. Given this, CBCP or directional disclosure information may detract from information already on the label. If manufacturers believe such disclosures are important, nothing in the Rule prohibits them from providing it somewhere on the package (other than on the Lighting Facts label), as long as the information is truthful and substantiated.

C. Lead Content Disclosure

The Commission is not proposing a lead disclosure on the Lighting Facts label at this time because there is no clear basis in the comments demonstrating that this additional requirement would assist consumers in their purchasing decisions. According to NEMA, manufacturers have removed most of the lead from regulated products and any remaining lead is not available to human touch.

D. Bilingual Label Requirements

The current Rule allows, but does not require, bilingual labels. In light of the substantial marketing directed at non-English speakers, the July 2010 Notice sought comment on whether, when manufacturers make claims in a foreign language on a light bulb package, they should be required to include the Lighting Facts label in both that language and English. NEMA, the only organization to comment on this issue, opposed such a bilingual labeling requirement, citing space limitations on packages and the confusion multiple languages may cause. The Commission heard from no organizations or persons with expertise in issues affecting non-English speaking consumers.

The Commission believes this issue warrants further consideration. For nearly 40 years, Commission rules, guides, and cease-and-desist orders that mandate the clear and conspicuous disclosure of information in advertisements and sales material have required that such information be displayed in the language of the target audience (ordinarily, the language principally used in the advertisement or sales material in question).[27] Before adopting an alternative approach in the context of light bulb packaging, the Commission will continue to consider this issue and seeks additional information from a wider group of stakeholders. As part of that process, the Commission requests further comment on whether non-English claims on light bulb packages should trigger mandatory bilingual labels or other disclosures, and specifically asks commenters to address the following questions:

lumens as the primary indicator of brightness. The Commission generally does not set environmental or performance standards, particularly if such standards will prohibit truthful, non-deceptive claims. See 75 FR 63552, 63596 (Oct. 15, 2010) (proposed FTC Green Guides revisions).

[27] 16 CFR 14.9 (*see* 38 FR 21494 (Aug. 4, 1973)); *see also* 16 CFR 610.4(a)(3)(ii) (mandatory disclosures about free credit reports must be made in same language as that principally used in the advertisement); 16 CFR 308.3(a)(1) (mandatory disclosures about pay-per-call services must be made in same language as that principally used in advertisement); 16 CFR 455.5 (where used car sale conducted in Spanish, mandatory disclosures must be made in Spanish); 16 CFR 429.1(a) (in door-to-door sales, failure to furnish completed receipt or contract in same language as oral sales presentation is an unfair and deceptive act or practice).

1. How prevalent today are non-English claims on light bulb packages? What are the languages being used? What types of information is typically conveyed through such non-English claims?

2. Do any light bulb packages currently include non-English information without displaying a bilingual version of the required FTC label? If so, please address whether, in such circumstances, the English label sufficiently conveys lighting information to non-English speaking consumers given the label's emphasis on numerical information. If so, why? If not, why not?

3. Would a bilingual label requirement triggered by non-English claims on packages discourage manufacturers from including non-English information on their packages? If so why, and what could be done to ameliorate that effect? If not, why not?

4. Could a bilingual label fit on all light bulb packages? If so, why? If not, why not? If the bilingual label could fit some but not all package sizes, how big would the package have to be to reasonably carry a bilingual label? Should a triggered disclosure depend on the size of the label?

5. Finally, the Commission seeks input on any other measures it should consider to help non-English speaking consumers obtain the information provided on the Lighting Facts Label concerning estimated annual energy cost, brightness, light appearance, life energy use, and the presence of mercury.

E. Fossil Fuel Lamps

The Commission is not proposing to require fossil fuel lamp labels (*e.g.,* natural gas lights, propane lights, and kerosene lamps) at this time because there is no clear basis in the record to indicate the Lighting Facts label would be appropriate for these products and thus help consumers in their purchasing decisions. In earlier comments, the Edison Electric Institute urged labeling for fossil fuel lamps noting their high energy costs.[28] However, fossil fuel lamps are significantly different from electric lamps in factors such as fuel type and use. For example, the usage and cost assumptions applicable to electric light bulbs may not apply to fossil fuel lamps. NEMA, which provided the only comments on this issue, noted that consumers use fossil fuel lamps for different applications than other lamps. NEMA also stated that consumers do not expect fossil fuel lamps to be energy efficient.

F. Power Factor

The Commission is not proposing to include power factor on the Lighting Facts label because, according to the comments, power factor does not affect a consumer's energy costs and few consumers are likely to understand the term.[29]

IV. Minor, Clarifying Changes

The Commission also proposes to clarify the Rule language for labeling bulbs that operate at multiple, separate light levels (*e.g.,* ''3-way'' bulbs) to clarify that such language applies to all covered bulb technologies. Currently, the Rule's language addressing such bulbs applies only to incandescent bulbs.

V. Request for Comment

The Commission invites interested persons to submit written comments on any issue of fact, law, or policy that may bear upon the proposals under consideration. Please include explanations for any answers provided, as well as supporting evidence where appropriate. After examining the comments, the Commission will determine whether to issue specific amendments.

You can file a comment online or on paper. For the Commission to consider your comment, we must receive it on or before September 22, 2011. Write ''Notice of Proposed Rulemaking on Expanded Bulb Coverage for the Lighting Facts Label (16 CFR part 305) (Project No. P084206)'' on your comment. Your comment—including your name and your state—will be placed on the public record of this proceeding, including, to the extent practicable, on the public Commission Web site, at *http://www.ftc.gov/os/publiccomments.shtm.* As a matter of discretion, the Commission tries to remove individuals' home contact information from comments before placing them on the Commission Website.

Because your comment will be made public, you are solely responsible for making sure that your comment does not include any sensitive personal information, like anyone's Social Security number, date of birth, driver's license number or other state identification number or foreign country equivalent, passport number, financial account number, or credit or debit card number. You are also solely responsible for making sure that your comment does not include any sensitive health information, like medical records or other individually identifiable health information. In addition, do not include any ''[t]rade secret or any commercial or financial information which is obtained from any person and which is privileged or confidential,'' as provided in Section 6(f) of the FTC Act, 15 U.S.C. 46(f), and FTC Rule 4.10(a)(2), 16 CFR 4.10(a)(2). If you want the Commission to give your comment confidential treatment, you must file it in paper form, with a request for confidential treatment, and you have to follow the procedure explained in FTC Rule 4.9(c), 16 CFR 4.9(c).[30] Your comment will be kept confidential only if the FTC General Counsel, in his or her sole discretion, grants your request in accordance with the law and the public interest.

Postal mail addressed to the Commission is subject to delay due to heightened security screening. As a result, we encourage you to submit your comments online, or to send them to the Commission by courier or overnight service. To make sure that the Commission considers your online comment, you must file it at *https://ftcpublic.commentworks.com/ftc/lampcoveragenprm,* by following the instructions on the web-based form. If this Notice appears at *http://www.regulations.gov/#!home,* you also may file a comment through that website.

If you file your comment on paper, write ''Notice of Proposed Rulemaking on Expanded Bulb Coverage for the Lighting Facts Label (16 CFR part 305) (Project No. P084206)'' on your comment and on the envelope, and mail or deliver it to the following address: Federal Trade Commission, Office of the Secretary, Room H–113 (Annex Y), 600 Pennsylvania Avenue, NW., Washington, DC 20580. If possible, submit your paper comment to the Commission by courier or overnight service.

Visit the Commission Web site at *http://www.ftc.gov* to read this Notice and the news release describing it. The FTC Act and other laws that the Commission administers permit the collection of public comments to consider and use in this proceeding as appropriate. The Commission will consider all timely and responsive

[28] See 75 FR at 41698, n.16.

[29] See NEMA, Cree, Inc., and CEE. Power factor, which is expressed as a number between 0 and 1, is a measure of the efficiency with which a device uses the power made available to it from the electric grid.

[30] In particular, the written request for confidential treatment that accompanies the comment must include the factual and legal basis for the request, and must identify the specific portions of the comment to be withheld from the public record. See FTC Rule 4.9(c), 16 CFR 4.9(c).

public comments that it receives on or before September 22, 2011. You can find more information, including routine uses permitted by the Privacy Act, in the Commission's privacy policy, at *http://www.ftc.gov/ftc/privacy.htm.*

Because written comments appear adequate to present the views of all interested parties, the Commission has not scheduled an oral hearing regarding these proposed amendments. Interested parties may request an opportunity to present views orally. If such a request is made, the Commission will publish a document in the **Federal Register** stating the time and place for such oral presentation(s) and describing the procedures that will be followed. Interested parties who wish to present oral views must submit a hearing request, on or before September 22, 2011, in the form of a written comment that describes the issues on which the party wishes to speak. If there is no oral hearing, the Commission will base its decision on the written rulemaking record.

VI. Paperwork Reduction Act

The current Rule contains recordkeeping, disclosure, and testing requirements that constitute a ''collection of information'' as defined by 5 CFR 1320.3(c), the definitions provision within OMB regulations that implement the Paperwork Reduction Act (PRA).[31] OMB has approved the Rule's existing information collection requirements through January 31, 2014 (OMB Control No. 3084–0069). The amendments make changes in the Rule's labeling requirements. Accordingly, the Commission has submitted this notice of proposed rulemaking and associated Supporting Statement to OMB for review under the PRA.[32]

Package and Product Labeling: The proposed amendments require manufacturers to label several new bulb types. Accordingly, manufacturers will have to amend their package and product labeling to include new disclosures. The new requirements impose a one-time adjustment for manufacturers. The Commission estimates that there are 50 manufacturers making approximately 3,000 of these newly covered products. This adjustment will require an estimated 600 hours per manufacturer on average.[33] Annualized for a single year reflective of a prospective 3-year PRA clearance, this averages to 200 hours per year. Thus, the label design change will result in cumulative burden of 10,000 hours (50 manufacturers × 200 hours). In estimating the associated labor cost, the Commission assumes that the label design change will be implemented by graphic designers at an hourly wage rate of $23.44 per hour based on Bureau of Labor Statistics information.[34] Thus, the Commission estimates annual labor cost for this adjustment will total $234,400 (10,000 hours × $23.44 per hour).

The Commission estimates that the annualized capital cost of expanding the light bulb label coverage is $1,535,000. This estimate is based on the assumptions that manufacturers will have to change 3,000 model packages over a three-year period to meet the new requirements[35] and that package label changes for each product will cost $1,335.[36] Manufacturers place information on products in the normal course of business. Annualized in the context of a 3-year PRA clearance, these non-labor costs would average $1,335,000 (3,000 model packages × $1,335 each ÷ 3 years). As for product labeling, the Commission assumes that the one-time labeling change will cost $200 per model for an annualized estimated total of $200,000 (3,000 models × $200 ÷ 3 years). Annualized in the context of a 3-year PRA clearance, these non-labor costs would average $1,535,000.

Catalog Sellers: The proposed amendments will also require catalog sellers (*e.g.,* website and print catalog sellers) to make required disclosures for these products pursuant to 16 CFR 305.20. The Commission estimates that there are approximately 150 entities subject to the amended requirements. The Commission estimates that these sellers each require approximately 17 hours per year to incorporate the data into their catalogs. This estimate is based on the assumption that entry of the required information takes on average one minute per covered product and an assumption that the average online catalog contains approximately 1,000 covered products. Given that there is great variety among sellers in the volume of products that they offer online, it is very difficult to estimate such numbers with precision. In addition, this analysis assumes that information for all 1,000 products is entered into the catalog each year. This is a conservative assumption because the number of incremental additions to the catalog from year to year is likely to be much lower after initial start-up efforts have been completed. Thus, the total annual disclosure burden for all catalog sellers of light bulbs covered by the proposed Rule is 2,550 hours (150 sellers × 17 hours annually). In estimating the associated labor cost, the Commission assumes that the label design change will be implemented by graphic designers at an hourly wage rate of $23.44 per hour.[37] Thus, estimated labor cost for this adjustment is $59,772 (2,550 hours × $23.44 per hour).

Testing: The Commission assumes conservatively that manufacturers will have to test 3,000 basic models at 14 hours for each model for a total of 42,000 hours.[38] In calculating the associated labor cost estimate, the Commission assumes that this work will be implemented by electrical engineers at an hourly wage rate of $39.72 per hour.[39] Thus, the Commission estimates that the new label design change will result in associated labor costs of approximately $1,668,240 (42,000 hours × $39.72 per hour). The Commission does not expect that the final amendments will create any capital or other non-labor costs for such testing.

Accordingly, the revised estimated total hour burden of the amendments is 54,550 hours (10,000 hours for packaging and labeling + 2,550 hours for catalog compliance + 42,000 hours for additional testing for correlated color temperature) with associated labor costs of $1,962,412 and annualized capital or other non-labor costs totaling $1,535,000.

[31] 44 U.S.C. 3501–3521.

[32] The PRA analysis for this rulemaking focuses strictly on the information collection requirements created by and/or otherwise affected by the amendments. Unaffected information collection provisions, specifically those regarding recordkeeping and reporting requirements, have previously been accounted for in past FTC analyses under the Rule and are covered by the current PRA clearance from OMB.

[33] The Commission has increased its estimate of the hours required to make this change from earlier estimates given recent concerns raised about the burden of implementing label changes. See 75 FR 81943 (Dec. 29, 2010).

[34] See U.S. Department of Labor, National Compensation Survey: Occupational Earnings in the United States 2009 (June 2010), Bulletin 2738, Table 3 (''Full-time civilian workers,'' mean and median hourly wages), *http://www.bls.gov/ncs/ncswage2009.htm, at 3-12.*

[35] This assumes that manufacturers will change packages for one third of their products in the normal course of business over the compliance period (i.e., 2½). The two and a half year compliance period and the notice provided by this proceeding should minimize the likelihood that manufacturers will have to discard package inventory. In addition, manufacturers may use stickers in lieu of discarding inventory.

[36] See 75 FR at 41712 n. 149 and accompanying text.

[37] See *supra* note 34.

[38] The Commission also assumes conservatively that manufacturers will conduct new testing for 3,000 out of the 6,000 estimated covered products. The Commission does not expect the specific LED testing requirements will increase burden because existing burden estimates account for testing of products already covered by the Rule. See 75 FR 81943 (Dec. 29, 2010).

[39] *Supra* note 34.

Comments on any proposed labeling requirements subject to review under the Paperwork Reduction Act should additionally be submitted to OMB. If sent by U.S. mail, they should be addressed to Office of Information and Regulatory Affairs, Office of Management and Budget, Attention: Desk Officer for the Federal Trade Commission, New Executive Office Building, Docket Library, Room 10102, 725 17th Street, NW., Washington, DC 20503. Comments sent to OMB by U.S. postal mail, however, are subject to delays due to heightened security precautions. Thus, comments instead should be sent by facsimile to (202) 395–5167.

VII. Regulatory Flexibility Act

The Regulatory Flexibility Act (RFA), 5 U.S.C. 601–612, requires that the Commission provide an Initial Regulatory Flexibility Analysis (IRFA) with a proposed rule and a Final Regulatory Flexibility Analysis (FRFA), if any, with the final rule, unless the Commission certifies that the rule will not have a significant economic impact on a substantial number of small entities. See 5 U.S.C. 603–605.

The Commission does not anticipate that the proposed rule will have a significant economic impact on a substantial number of small entities. The Commission recognizes that some of the affected manufacturers may qualify as small businesses under the relevant thresholds. However, the Commission does not expect that the economic impact of the proposed amendments will be significant.

In its July 19, 2010 Notice (75 FR 41711), the Commission estimated that the new labeling requirements will apply to about 50 product manufacturers and an additional 150 online and paper catalog sellers of covered products. The Commission expects that approximately 150 qualify as small businesses.

Accordingly, this document serves as notice to the Small Business Administration of the FTC's certification of no effect. To ensure the accuracy of this certification, however, the Commission requests comment on whether the proposed rule will have a significant impact on a substantial number of small entities, including specific information on the number of entities that would be covered by the proposed rule, the number of these companies that are ''small entities,'' and the average annual burden for each entity. Although the Commission certifies under the RFA that the rule proposed in this notice would not, if promulgated, have a significant impact on a substantial number of small entities, the Commission has determined, nonetheless, that it is appropriate to publish an IRFA in order to inquire into the impact of the proposed rule on small entities. Therefore, the Commission has prepared the following analysis:

A. Description of the Reasons That Action by the Agency Is Being Taken

Section 321(b) of the Energy Independence and Security Act of 2007 (Pub. L. 110–140) requires the Commission to consider reopening light bulb labeling requirements in 2011. The Commission is proposing expanded product coverage and additional testing requirements to help consumers in their purchasing decisions for high efficiency products.

B. Statement of the Objectives of, and Legal Basis for, the Proposed Rule

The objective of the rule is to improve the effectiveness of the current lamp labeling program. Section 321(b) of the Energy Independence and Security Act of 2007 (Pub. L. 110–140) requires the Commission consider reopening light bulb labeling requirements in 2011 to consider whether alternative labeling approaches would help consumers better understand new high-efficiency lamp products and help them choose lamps that meet their needs.

C. Small Entities to Which the Proposed Rule Will Apply

Under the Small Business Size Standards issued by the Small Business Administration, lamp manufacturers qualify as small businesses if they have fewer than 1,000 employees (for other household appliances the figure is 500 employees). Lamp catalog sellers qualify as small businesses if their sales are less than $8.0 million annually. The Commission estimates that there are approximately 150 entities subject to the proposed rule's requirements that qualify as small businesses.[40] The Commission seeks comment and information with regard to the estimated number or nature of small business entities for which the proposed rule would have a significant economic impact.

D. Projected Reporting, Recordkeeping and Other Compliance Requirements

The changes under consideration would not increase any reporting or recordkeeping requirements associated with the Commission's labeling rules (75 FR 41696). The amendments will increase compliance burdens by extending the labeling requirements to new types of light bulbs. The Commission assumes that the label design change will be implemented by graphic designers.

E. Duplicative, Overlapping, or Conflicting Federal Rules

The Commission has not identified any other federal statutes, rules, or policies that would duplicate, overlap, or conflict with the proposed rule. The Commission invites comment and information on this issue.

F. Significant Alternatives to the Proposed Rule

The Commission seeks comment and information on the need, if any, for alternative compliance methods that, consistent with the statutory requirements, would reduce the economic impact of the rule on small entities. For example, in proposing to extend the bulb coverage, the Commission is currently unaware of the need to adopt any special provision for small entities to be able to take advantage of the proposed extension or exemption, where applicable. However, if such issues are identified, the Commission could consider alternative approaches such as extending the effective date of these amendments for catalog sellers to allow them additional time to comply beyond the labeling deadline set for manufacturers. Nonetheless, if the comments filed in response to this notice identify small entities that are affected by the rule, as well as alternative methods of compliance that would reduce the economic impact of the rule on such entities, the Commission will consider the feasibility of such alternatives and determine whether they should be incorporated into the final rule.

VIII. Communications by Outside Parties to the Commissioners or Their Advisors

Written communications and summaries or transcripts of oral communications respecting the merits of this proceeding, from any outside party to any Commissioner or Commissioner's advisor, will be placed on the public record. See 16 CFR 1.26(b)(5).

IX. Proposed Rule

List of Subjects in 16 CFR Part 305

Advertising, Energy conservation, Household appliances, Labeling, Reporting and recordkeeping requirements.

For the reasons discussed above, the Commission proposes to amend part

[40] See 75 FR at 41712.

305 of title 16, Code of Federal Regulations, as follows:

PART 305—RULE CONCERNING DISCLOSURES REGARDING ENERGY CONSUMPTION AND WATER USE OF CERTAIN HOME APPLIANCES AND OTHER PRODUCTS REQUIRED UNDER THE ENERGY POLICY AND CONSERVATION ACT (''APPLIANCE LABELING RULE'')

1. The authority citation for part 305 continues to read as follows:

Authority: 42 U.S.C. 6294.

2. In § 305.3, revise paragraphs (l), (m), (n), (o), (p) and (q) to read as follows:

§ 305.3 Description of covered products.

* * * * *

(l) *General service lamp* means:

(1) A lamp that is a consumer product and is:

(i) A compact fluorescent lamp;

(ii) A general service incandescent lamp;

(iii) A general service light-emitting diode (LED or OLED) lamp; or

(iv) Any other lamp that the Secretary of Energy determines is used to satisfy lighting applications traditionally served by general service incandescent lamps.

(2) Exclusions. The term general service lamp does not include—

(i) Any lighting application or bulb shape described in paragraphs (n)(2)(ii)(A) through (Q) of this section; and

(ii) Any general service fluorescent lamp.

(m) *Compact fluorescent lamp* means an integrally ballasted fluorescent lamp with a screw, GU–10 pin, or GU–24 pin base, and a rated input voltage range of 115 to 130 volts; however, the term does not include any lamp that is specifically designed to be used for special purpose applications described in paragraphs (n)(2)(ii)(A) through (Q) of this section.

(n) *Incandescent lamp:*

(1) Means a lamp in which light is produced by a filament heated to incandescence by an electric current, including only the following:

(i) Any lamp (commonly referred to as lower wattage nonreflector general service lamps, including any tungsten-halogen lamp) that has a rated wattage up to 199 watts, has an screw base, has a rated voltage or voltage range that lies at least partially within 115 and 130 volts, and is not a reflector lamp;

(ii) Any lamp (commonly referred to as a reflector lamp) which is not colored or designed for rough or vibration service applications, that contains an inner reflective coating on the outer bulb to direct the light, an R, PAR, ER, BR, BPAR, or similar bulb shapes with screw bases and a rated voltage or voltage range that lies at least partially within 115 and 130 volts;

(iii) Any general service incandescent lamp (commonly referred to as a high or higher-wattage lamp) that has a rated wattage above 199 watts (above 205 watts for a high wattage reflector lamp);

(2) General service incandescent lamp means

(i) In general, a standard incandescent, halogen, or reflector type lamp that—

(A) Is intended for general service applications;

(B) Has a screw base;

(C) Has a lumen range of not more than 2,600 lumens; and

(D) Is capable of being operated at a voltage range at least partially within 110 and 130 volts.

(ii) Exclusions. The term ''general service incandescent lamp'' does not include the following incandescent lamps:

(A) An appliance lamp as defined at 42 U.S.C. 6291(30);

(B) A black light lamp;

(C) A bug lamp;

(D) A colored lamp as defined at 42 U.S.C. 6291(30);

(E) An infrared lamp;

(F) A left-hand thread lamp;

(G) A marine lamp;

(H) A marine signal service lamp;

(I) A mine service lamp;

(J) A plant light lamp;

(K) A rough service lamp as defined at 42 U.S.C. 6291(30);

(L) A shatter-resistant lamp (including a shatter-proof lamp and a shatterprotected lamp);

(M) A sign service lamp;

(N) A silver bowl lamp;

(O) A showcase lamp;

(P) A traffic signal lamp; or

(Q) A vibration service lamp as defined at 42 U.S.C. 6291(30);

(3) Incandescent reflector lamp means a lamp described in paragraph (n)(1)(ii) of this section; and

(4) Tungsten-halogen lamp means a gas-filled tungsten filament incandescent lamp containing a certain proportion of halogens in an inert gas.

(o) Light-emitting diode (LED) means a p-n junction solid state device the radiated output of which is a function of the physical construction, material used, and exciting current of the device.

The output of a light-emitting diode may be in—

(1) The infrared region;

(2) The visible region; or

(3) The ultraviolet region.

(p) Organic light-emitting diode (OLED) means a thin-film light-emitting device that typically consists of a series of organic layers between 2 electrical contacts (electrodes).

(q) General service light-emitting diode (LED or OLED) lamp means any light-emitting diode (LED or OLED) lamp that:

(1) Is intended for general service applications;

(2) Has a screw base;

(3) Has a lumen range of not more than 2,600 lumens; and

(4) Is capable of being operated at a voltage range at least partially within 110 and 130 volts.

* * * * *

3. In § 305.5, paragraphs (b), (c), and (d) are redesignated as paragraphs (c), (d), and (e), add a new paragraph (b), and revise the newly designated paragraph (c) to read as follows:

§ 305.5 Determinations of estimated annual energy consumption, estimated annual operating cost, and energy efficiency rating, and of water use rate.

* * * * *

(b) Manufacturers and private labelers of any covered product that is a general service light- emitting diode lamp must determine the product's light output and correlated color temperature using ''IES LM–79–08, Electrical and Photometric Measurements of Solid-State Lighting Products.'' This procedure is incorporated by reference into this section. The Director of the Federal Register approved these incorporations by reference in accordance with 5 U.S.C. 552(a) and 1 CFR part 51. Copies of the test procedure may be inspected or obtained at the Federal Trade Commission, Consumer Response Center, Room 130, 600 Pennsylvania Avenue, N.W., Washington, DC 20580; at the National Archives and Records Administration (NARA) by calling (202) 741–6030 or going to *http://www.archives.gov/federal_register/code_of_federal_regulations/ibr_locations.html;* or from the Illuminating Engineering Society at *www.iesna.org.*

(c) Unless otherwise provided in paragraph (a) or (b) of this section or § 305.8, manufacturers and private labelers of any covered product that is a general service fluorescent lamp, general service lamp, or metal halide lamp fixture, must, for any representation required by this Part including but not limited to of the design voltage, wattage, energy cost, light output, life, correlated color temperature, or color rendering index of such lamp or for any representation made by the encircled ''E'' that such a lamp is in compliance with an

applicable standard established by section 325 of the Act, possess and rely upon a reasonable basis consisting of competent and reliable scientific tests substantiating the representation. For representations of the light output and life ratings of any covered product that is a general service lamp, unless otherwise provided by paragraph (a), the Commission will accept as a reasonable basis scientific tests conducted according to the following applicable IES test protocols that substantiate the representations:

For measuring light output (in lumens):	
General Service Fluorescent	IES LM 9.
Compact Fluorescent	IES LM 66.
General Service Incandescent (Other than Reflector Lamps)	IES LM 45.
General Service Incandescent (Reflector Lamps)	IES LM 20.
For measuring laboratory life (in hours):	
General Service Fluorescent	IES LM 40.
Compact Fluorescent	IES LM 65.
General Service Incandescent (Other than Reflector Lamps)	IES LM 49.
General Service Incandescent (Reflector Lamps)	IES LM 49.

4. In § 305.15(d)(4) is revised to read as follows:

§ 305.15 Labeling for lighting products.

* * * * *

(d) * * *

(4) For any covered product that is a general service lamp and operates at discrete, multiple light levels (*e.g.,* 800, 1600, and 2500 lumens), the light output, energy cost, and wattage disclosures required by this section must be provided at each of the lamp's levels of light output and the lamp's life provided on the basis of the shortest lived operating mode. The multiple numbers shall be separated by a ''/'' (*e.g.,* 800/1600/2500 lumens) if they appear on the same line on the label.

* * * * *

By direction of the Commission.

Donald S. Clark,

Secretary.

[FR Doc. 2011–19041 Filed 7–29–11; 8:45 am]

BILLING CODE 6750–01–P

COMMODITY FUTURES TRADING COMMISSION

17 CFR Parts 1 and 23

RIN 3038–AD51

Clearing Member Risk Management

AGENCY: Commodity Futures Trading Commission.

ACTION: Notice of proposed rulemaking.

SUMMARY: The Commodity Futures Trading Commission (Commission or CFTC) is proposing rules to implement new statutory provisions enacted by Title VII of the Dodd-Frank Wall Street Reform and Consumer Protection Act. These proposed rules address risk management for cleared trades by futures commission merchants, swap dealers, and major swap participants that are clearing members.

DATES: Submit comments on or before September 30, 2011.

ADDRESSES: You may submit comments, identified by RIN number 3038–AD51, by any of the following methods:

- *Agency Web site, via its Comments Online process: http://comments.cftc.gov.* Follow the instructions for submitting comments through the Web site.
- *Federal eRulemaking Portal: http://www.regulations.gov.* Follow the instructions for submitting comments.
- *Mail:* David A. Stawick, Secretary of the Commission, Commodity Futures Trading Commission, Three Lafayette Centre, 1155 21st Street, NW., Washington, DC 20581.
- *Courier:* Same as mail above.

Please submit your comments using only one method. RIN number, 3038–AD51, must be in the subject field of responses submitted via e-mail, and clearly indicated on written submissions. All comments must be submitted in English, or if not, accompanied by an English translation. Comments will be posted as received to *http://www.cftc.gov.* You should submit only information that you wish to make available publicly. If you wish the CFTC to consider information that you believe is exempt from disclosure under the Freedom of Information Act, a petition for confidential treatment of the exempt information may be submitted according to the procedures established in § 145.9 of the CFTC's regulations.[1]

The CFTC reserves the right, but shall have no obligation, to review, pre-screen, filter, redact, refuse or remove any or all of your submission from *http://www.cftc.gov* that it may deem to be inappropriate for publication, such as obscene language. All submissions that have been redacted or removed that contain comments on the merits of this action will be retained in the public comment file and will be considered as required under the Administrative Procedure Act and other applicable laws, and may be accessible under the Freedom of Information Act.

FOR FURTHER INFORMATION CONTACT: John C. Lawton, Deputy Director and Chief Counsel, 202–418–5480, *jlawton@cftc.gov,* or Christopher A. Hower, Attorney-Advisor, 202–418–6703, *chower@cftc.gov,* Division of Clearing and Intermediary Oversight, Commodity Futures Trading Commission, Three Lafayette Centre, 1155 21st Street, NW., Washington, DC 20581.

SUPPLEMENTARY INFORMATION:

I. Background

On July 21, 2010, President Obama signed the Dodd-Frank Wall Street Reform and Consumer Protection Act (Dodd-Frank Act).[2] Title VII of the Dodd-Frank Act amended the Commodity Exchange Act (CEA or Act)[3] to establish a comprehensive new regulatory framework for swaps. The legislation was enacted to reduce risk, increase transparency, and promote market integrity within the financial system by, among other things: (1) Providing for the registration and comprehensive regulation of swap dealers and major swap participants; (2) imposing clearing and trade execution requirements on standardized derivative products; (3) creating rigorous recordkeeping and real-time reporting regimes; and (4) enhancing the Commission's rulemaking and enforcement authorities with respect to, among others, all registered entities and intermediaries subject to the Commission's oversight. Title VII also includes amendments to the federal securities laws to establish a similar

[1] 17 CFR 145.9.

[2] *See* Dodd-Frank Wall Street Reform and Consumer Protection Act, Pub. L. 111–203, 124 Stat. 1376 (2010).

[3] 7 U.S.C. 1 *et seq.*

regulatory framework for security-based swaps under the authority of the Securities and Exchange Commission (SEC).

II. Proposed Regulations

A. Introduction

A fundamental premise of the Dodd-Frank Act is that the use of properly regulated central clearing can reduce systemic risk. The Commission has proposed extensive regulations addressing open access and risk management at the derivatives clearing organization (DCO) level.[4] The Commission also has proposed regulations addressing risk management for swap dealers (SDs) and major swap participants (MSPs).[5]

Clearing members provide the portals through which market participants gain access to DCOs as well as the first line of risk management. Accordingly, the Commission is proposing regulations to facilitate customer access to clearing and to bolster risk management at the clearing member level. The proposal addresses risk management for cleared trades by FCMs and SDs and MSPs that are clearing members.

B. Clearing Member Risk Management

Section 3(b) provides that one of the purposes of the Act is to ensure the financial integrity of all transactions subject to the Act and to avoid systemic risk. Section 8a(5) authorizes the Commission to promulgate such regulations that it believes are reasonably necessary to effectuate any of the provisions or to accomplish any of the purposes of the Act. Risk management systems are critical to the avoidance of systemic risks.

Section 4s(j)(2) requires each SD and MSP to have risk management systems adequate for managing its business. Section 4s(j)(4) requires each SD and MSP to have internal systems and procedures to perform any of the functions set forth in Section 4s.

Section 4d requires FCMs to register with the Commission. It further requires FCMs to segregate customer funds. Section 4f requires FCMs to maintain certain levels of capital. Section 4g establishes reporting and recordkeeping requirements for FCMs.

These provisions of law and Commission regulations promulgated pursuant to these provisions create a web of obligations designed to secure the financial integrity of the markets and the clearing system, to avoid systemic risk, and to protect customer funds. Effective risk management by FCMs is essential to achieving these goals. For example, a poorly managed position in the customer account can cause an FCM to become undersegregated. A poorly managed position in the proprietary account can cause an FCM to fall out of compliance with capital requirements.

Even more significantly, a failure of risk management can cause an FCM to become insolvent and default to a DCO. This can disrupt the markets and the clearing system and harm customers. Such failures have been predominately attributable to failures in risk management.[6]

As noted previously, the Dodd-Frank Act requires the increased use of central clearing. In particular, Section 2(h) establishes procedures for the mandatory clearing of certain swaps. As stated in the Senate Committee report: ''Increasing the use of central clearinghouses * * * will provide safeguards for American taxpayers and the financial system as a whole.[7]

The Commission has proposed extensive risk management standards at the DCO level. Given the increased importance of clearing and the expected entrance of new products and new participants into the clearing system, the Commission believes that enhancing the safeguards at the clearing member level is necessary as well.

Bringing swaps into clearing will increase the magnitude of the risks faced by clearing members. In many cases, it will change the nature of those risks as well. Many types of swaps have their own unique set of risk characteristics. The Commission believes that the increased concentration of risk in the clearing system combined with the changing configuration of the risk warrant additional vigilance not only by DCOs but by clearing members as well.

FCMs generally have extensive experience managing the risk of futures. They generally have less experience managing the risks of swaps. The Commission believes that it is a reasonable precaution to require that certain safeguards be in place. It would ensure that FCMs, who clear on behalf of customers, are subject to standards at least as stringent as those applicable to SDs and MSPs, who clear only for themselves. Failure to require SDs, MSPs, and FCMs that are clearing members to maintain such safeguards would frustrate the regulatory regime established in the CEA, as amended by the Dodd-Frank Act. Accordingly, the Commission believes that applying the risk-management requirements in the proposed rules to SDs, MSPs, and FCMs that are clearing members are reasonably necessary to effectuate the provisions and to accomplish the purposes of the CEA.

Proposed § 1.73 would apply to clearing members that are FCMs; proposed § 23.609 would apply to clearing members that are SDs or MSPs. These provisions would require these clearing members to have procedures to limit the financial risks they incur as a result of clearing trades and liquid resources to meet the obligations that arise. The proposal would require clearing members to:

(1) Establish credit and market risk-based limits based on position size, order size, margin requirements, or similar factors;

(2) Use automated means to screen orders for compliance with the risk-based limits;

(3) Monitor for adherence to the risk-based limits intra-day and overnight;

(4) Conduct stress tests of all positions in the proprietary account and all positions in any customer account that could pose material risk to the futures commission merchant at least once per week;

(5) Evaluate its ability to meet initial margin requirements at least once per week;

(6) Evaluate its ability to meet variation margin requirements in cash at least once per week;

(7) Evaluate its ability to liquidate the positions it clears in an orderly manner, and estimate the cost of the liquidation at least once per month; and

(8) Test all lines of credit at least once per quarter.

Each of these items has been observed by Commission staff as an element of an existing sound risk management program at a DCO or an FCM.

The Commission does not intend to prescribe the particular means of fulfilling these obligations. As is the case with DCOs, clearing members will have flexibility in developing procedures that meet their needs. For example, items (1) and (2) could be addressed through simple numerical limits on order or position size or through more complex margin-based limits. Further examples could include

[4] *See, e.g.,* 76 FR 3698 (Jan. 20, 2011) (Risk Management Requirements for Derivatives Clearing Organizations). These proposed regulations include a requirement that a DCO adopt rules addressing each clearing member's risk management policies and procedures. *See* proposed § 39.13(h)(5).

[5] *See, e.g.,* 75 FR 91397 (Nov. 23, 2010) (Regulations Establishing Duties of Swap Dealers and Major Swap Participants).

[6] *See, e.g.,* the failure of Volume Investors Corporation in 1986, the failure of Griffin Trading Company in 1998, and the failure of Klein & Company Futures, Inc. in 2000.

[7] S. Rep. No. 111–176, at 32 (2010) (report of the Senate Committee on Banking, Housing, and Urban Affairs).

price limits to reject orders that are too far away from the market, or limits on the number of orders that could be placed in a short time.

The following are examples of tools that could be used to monitor for risk and to mitigate it:

—The ability to see all working and filled orders for intraday risk management;

—A ''kill button'' that cancels all open orders for an account and disconnects electronic access.

The Commission believes that these proposals are consistent with international standards. In August 2010, the International Organization of Securities Commissions issued a report entitled ''Direct Electronic Access to Markets.''[8] The report set out a number of principles to guide markets, regulators, and intermediaries. Principle 6 states that:

> A market should not permit DEA [direct electronic access] unless there are in place effective systems and controls reasonably designed to enable the management of risk with regard to fair and orderly trading including, in particular, automated pre-trade controls that enable intermediaries to implement appropriate trading limits.

Principle 7 states that:

> Intermediaries (including, as appropriate, clearing firms) should use controls, including automated pre-trade controls, which can limit or prevent a DEA Customer from placing an order that exceeds a relevant intermediary's existing position or credit limits.

Stress tests are an essential risk management tool. The purpose in conducting stress tests is to determine the potential for significant losses in the event of extreme market events and the ability of traders and clearing members to absorb the losses. As was the case with the DCO risk management proposal, the Commission does not intend to prescribe the manner in which clearing members conduct stress tests. Rather, the Commission would monitor to determine whether clearing members were routinely conducting stress tests reasonably designed for the types of risk the clearing members and their customers face.

The proposal also would require clearing members to evaluate their ability to meet calls for initial and variation margin. This includes testing for liquidity of financial resources available to cover exposures due to market events. Routine testing of this sort diminishes the chance of a default based on liquidity problems.

Each clearing member also would be required to evaluate periodically its ability to liquidate, in an orderly manner, the positions in the proprietary and customer accounts and estimate the cost of the liquidation. In recent years, Commission staff has observed instances where a trader was unable to meet its financial obligations and the FCM had to assume responsibility for the trader's portfolio. Under these conditions, an FCM would normally liquidate the portfolio promptly. In some instances, however, where the portfolio contained large and complex options positions, the FCM found that it was not easy to liquidate. The Commission believes that clearing members should periodically review portfolios to ensure that they have the ability to liquidate them and to estimate the cost of such liquidation. The exercise should also address the ability of the FCM to put on appropriate hedges to mitigate risk pending liquidation. Such an exercise would take into account the size of the positions, the concentration of the positions in particular markets, and the liquidity of the markets.

Finally, the proposal would require each clearing member to establish written procedures to comply with this regulation and to keep records documenting its compliance. The Commission believes that these are important elements of a good risk management program.

The Commission requests comments on all aspects of the risk management proposal. In particular the Commission requests comment on:

- The extent to which each DCO already (i) Requires clearing member FCMs, SDs, and MSPs to have each component, and (ii) audits compliance with such requirement;
- The extent to which each component has otherwise been incorporated into exsisting risk management systems of clearing member FCMs, SDs, and MSPs; and
- The potential costs and benefits of each component.

III. Related Matters

A. Regulatory Flexibility Act

The Regulatory Flexibility Act (RFA) requires that agencies consider whether the regulations they propose will have a significant economic impact on a substantial number of small entities.[9] The Commission previously has established certain definitions of ''small entities'' to be used in evaluating the impact of its regulations on small entities in accordance with the RFA.[10] The proposed regulations would affect FCMs, DCOs, SDs, and MSPs.

The Commission previously has determined, however, that FCMs should not be considered to be small entities for purposes of the RFA.[11] The Commission's determination was based, in part, upon the obligation of FCMs to meet the minimum financial requirements established by the Commission to enhance the protection of customers' segregated funds and protect the financial condition of FCMs generally.[12] The Commission also has previously determined that DCOs are not small entities for the purpose of the RFA.[13]

SDs and MSPs are new categories of registrants. Accordingly, the Commission has not previously addressed the question of whether such persons are, in fact, small entities for purposes of the RFA. Like FCMs, SDs will be subject to minimum capital and margin requirements and are expected to comprise the largest global financial firms. The Commission is required to exempt from SD registration any entities that engage in a de minimis level of swap dealing in connection with transactions with or on behalf of customers. The Commission anticipates that this exemption would tend to exclude small entities from registration. Accordingly, for purposes of the RFA for this rulemaking, the Commission is hereby proposing that SDs not be considered ''small entities'' for essentially the same reasons that FCMs have previously been determined not to be small entities and in light of the exemption from the definition of SD for those engaging in a de minimis level of swap dealing.

The Commission also has previously determined that large traders are not ''small entities'' for RFA purposes.[14] In that determination, the Commission considered that a large trading position was indicative of the size of the business. MSPs, by statutory definition, maintain substantial positions in swaps or maintain outstanding swap positions that create substantial counterparty exposure that could have serious adverse effects on the financial stability of the United States banking system or financial markets. Accordingly, for purposes of the RFA for this rulemaking, the Commission is hereby proposing that MSPs not be considered ''small entities'' for essentially the same reasons that large traders have

[8] The report can be found at *http://www.iosco.org.*

[9] 5 U.S.C. 601 *et seq.*

[10] 47 FR 18618, Apr. 30, 1982.

[11] *Id.* at 18619.

[12] *Id.*

[13] *See* 66 FR 45605, 45609, Aug. 29, 2001.

[14] *Id.* at 18620.

previously been determined not to be small entities.

Accordingly, the Chairman, on behalf of the Commission, hereby certifies pursuant to 5 U.S.C. 605(b) that the proposed regulations will not have a significant economic impact on a substantial number of small entities. The Commission invites the public to comment on whether SDs and MSPs should be considered small entities for purposes of the RFA.

B. Paperwork Reduction Act

The Paperwork Reduction Act (PRA) [15] imposes certain requirements on Federal agencies (including the Commission) in connection with their conducting or sponsoring any collection of information as defined by the PRA. This proposed rulemaking would result in new collection of information requirements within the meaning of the PRA. The Commission therefore is submitting this proposal to the Office of Management and Budget (OMB) for review in accordance with 44 U.S.C. 3507(d) and 5 CFR 1320.11. The title for this collection of information is ''Clearing Member Position Risk Management.'' An agency may not conduct or sponsor, and a person is not required to respond to, a collection of information unless it displays a currently valid control number. The OMB has not yet assigned this collection a control number.

The collection of information under these proposed regulations is necessary to implement certain provisions of the CEA, as amended by the Dodd-Frank Act. Specifically, it is essential both for effective risk management and for the efficient operation of trading venues among swap dealers, major swap participants, and futures commission merchants. The position risk management requirement established by the proposed rules diminishes the chance for a default, thus ensuring the financial integrity of markets as well as customer protection.

If the proposed regulations are adopted, responses to this collection of information would be mandatory. The Commission will protect proprietary information according to the Freedom of Information Act and 17 CFR part 145, ''Commission Records and Information.'' In addition, section 8(a)(1) of the CEA strictly prohibits the Commission, unless specifically authorized by the CEA, from making public ''data and information that would separately disclose the business transactions or market positions of any person and trade secrets or names of customers.'' The Commission is also required to protect certain information contained in a government system of records according to the Privacy Act of 1974, 5 U.S.C. 552a.

1. Information Provided by Reporting Entities/Persons

Swap dealers, major swap participants, and futures commission merchants would be required to develop and monitor procedures for position risk management in accordance with proposed rules 1.73 and 23.609.

The annual burden associated with these proposed regulations is estimated to be 524 hours, at an annual cost of $52,400 for each futures commission merchant, swap dealer, and major swap participant. Burden means the total time, effort, or financial resources expended by persons to generate, maintain, retain, disclose, or provide information to or for a federal agency. The Commission has characterized the annual costs as initial costs because the Commission anticipates that the cost burdens will be reduced dramatically over time as the documentation and procedures required by the proposed regulations become increasingly standardized within the industry.

This hourly burden primarily results from the position risk management obligations that would be imposed by proposed regulations 1.73 and 23.609. Proposed 1.73 and 23.609 would require each futures commission merchant, swap dealer, and major swap participant to establish and enforce procedures to establish risk-based limits, conduct stress testing, evaluate the ability to meet initial and variation margin, test lines of credit, and evaluate the ability to liquidate, in an orderly manner, the positions in the proprietary and customer accounts and estimate the cost of the liquidation. The Commission believes that each of these items is currently an element of existing risk management programs at a DCO or an FCM. Accordingly, any additional expenditure related to §§ 1.73 and 23.609 likely would be limited to the time initially required to review and, as needed, amend, existing risk management procedures to ensure that they encompass all of the required elements and to develop a system for performing these functions as often as required.

In addition, proposed §§ 1.73 and 23.609 would require each futures commission merchant, swap dealer, and major swap participant to establish written procedures to comply, and maintain records documenting compliance. Maintenance of compliance procedures and records of compliance is prudent business practice and the Commission anticipates that swap dealers and major swap participants already maintain some form of this documentation.

With respect to the required position risk management, the Commission estimates that futures commission merchants, swap dealers, and major swap participants will spend an average of 2 hours per trading day, or 504 hours per year, performing the required tests. The Commission notes that the specific information required for these tests is of the type that would be performed in a prudent market participant's ordinary course of business.

In addition to the above, the Commission anticipates that futures commission merchants, swap dealers, and major swap participants will spend an average of 16 hours per year drafting and, as needed, updating the written policies and procedures to ensure compliance required by proposed §§ 1.73 and 23.609, and 4 hours per year maintaining records of the compliance.

The hour burden calculations below are based upon a number of variables such as the number of futures commission merchants, swap dealers, and major swap participants in the marketplace and the average hourly wage of the employees of these registrants that would be responsible for satisfying the obligations established by the proposed regulation.

There are currently 134 futures commission merchants based on industry data. Swap dealers and major swap participants are new categories of registrants. Accordingly, it is not currently known how many swap dealers and major swap participants will become subject to these rules, and this will not be known to the Commission until the registration requirements for these entities become effective after July 16, 2011, the date on which the Dodd-Frank Act becomes effective. While the Commission believes there will be approximately 200 swap dealers and 50 major swap participants, it has taken a conservative approach, for PRA purposes, in estimating that there will be a combined number of 300 swap dealers and major swap participants who will be required to comply with the recordkeeping requirements of the proposed rules. The Commission estimated the number of affected entities based on industry data.

According to recent Bureau of Labor Statistics, the mean hourly wage of an employee under occupation code 11–3031, ''Financial Managers,'' (which includes operations managers) that is employed by the ''Securities and Commodity Contracts Intermediation

[15] 44 U.S.C. 3501 *et seq.*

and Brokerage'' industry is $74.41.[16] Because swap dealers, major swap participants, and futures commission merchants include large financial institutions whose operations management employees' salaries may exceed the mean wage, the Commission has estimated the cost burden of these proposed regulations based upon an average salary of $100 per hour.

Accordingly, the estimated hour burden was calculated as follows: *Developing and Conducting Position Risk Management Procedures for Swap Dealers and Major Swap Participants.* This hourly burden arises from the proposed requirement that swap dealers and major swap participants establish and perform testing of clearing member risk management procedures.

Number of registrants: 300.

Frequency of collection: Daily.

Estimated number of responses per registrant: 252 [252 trading days].

Estimated aggregate number of responses: 75,600 [300 registrants × 252 trading days].

Estimated annual burden per registrant: 504 hours [252 trading days × 2 hours per record].

Estimated aggregate annual hour burden: 151,200 hours [300 registrants × 252 trading days × 2 hours per record].

Developing Written Procedures for Compliance, and Maintaining Records Documenting Compliance for Swap Dealers and Major Swap Participants. This hourly burden arises from the proposed requirement that swap dealers and major swap participants make and maintain records documenting compliance related to clearing member risk management.

Number of registrants: 300.

Frequency of collection: As needed.

Estimated number of annual responses per registrant: 1.

Estimated aggregate number of annual responses: 300.

Estimated annual hour burden per registrant: 20 hours.

Estimated aggregate annual hour burden: 6,000 burden hours [300 registrants × 20 hours per registrant].

Developing and Conducting Position Risk Management Procedures for Futures Commission Merchants: This hourly burden arises from the proposed requirement that futures commission merchants establish and perform testing of clearing member risk management procedures.

Number of registrants: 134.

Frequency of collection: Daily.

Estimated number of responses per registrant: 252 [252 trading days].

Estimated aggregate number of responses: 33,768 [134 registrants × 252 trading days].

Estimated annual burden per registrant: 504 hours [252 trading days × 2 hours per record].

Estimated aggregate annual hour burden: 67,536 hours [134 registrants × 252 trading days × 2 hours per record].

Developing Written Procedures for Compliance, and Maintaining Records Documenting Compliance for Futures Commission Merchants. This hourly burden arises from the proposed requirement that futures commission merchants make and maintain records documenting compliance related to clearing member risk management.

Number of registrants: 134.

Frequency of collection: As needed.

Estimated number of annual responses per registrant: 1.

Estimated aggregate number of annual responses: 134.

Estimated annual hour burden per registrant: 20 hours.

Estimated aggregate annual hour burden: 2,680 burden hours [134 registrants × 20 hours per registrant].

Based upon the above, the aggregate hour burden cost for all registrants is 227,416 burden hours and $22,741,600 [227,416 × $100 per hour].

In addition to the per hour burden discussed above, the Commission anticipates that swap dealers, major swap participants, and futures commission merchants may incur certain start-up costs in connection with the proposed recordkeeping obligations. Such costs would include the expenditures related to re-programming or updating existing recordkeeping technology and systems to enable the swap dealer, major swap participant, or futures commission merchant to collect, capture, process, maintain, and re-produce any newly required records. The Commission believes that swap dealers, major swap participants, and futures commission merchants generally could adapt their current infrastructure to accommodate the new or amended technology and thus no significant infrastructure expenditures would be needed. The Commission estimates the programming burden hours associated with technology improvements to be 60 hours.

According to recent Bureau of Labor Statistics, the mean hourly wages of computer programmers under occupation code 15–1021 and computer software engineers under program codes 15–1031 and 1032 are between $34.10 and $44.94.[17] Because swap dealers, major swap participants, and futures commission merchants generally will be large entities that may engage employees with wages above the mean, the Commission has conservatively chosen to use a mean hourly programming wage of $60 per hour. Accordingly, the start-up burden associated with the required technological improvements would be $3,600 [$60 × 60 hours] per affected registrant or $1,562,400 [$3,600 × 434 registrants] in the aggregate.

2. Information Collection Comments

The Commission invites the public and other federal agencies to comment on any aspect of the recordkeeping burdens discussed above. Pursuant to 44 U.S.C. 3506(c)(2)(B), the Commission solicits comments in order to: (i) Evaluate whether the proposed collection of information is necessary for the proper performance of the functions of the Commission, including whether the information will have practical utility; (ii) evaluate the accuracy of the Commission's estimate of the burden of the proposed collection of information; (iii) determine whether there are ways to enhance the quality, utility, and clarity of the information to be collected; and (iv) minimize the burden of the collection of information on those who are to respond, including through the use of automated collection techniques or other forms of information technology.

Comments may be submitted directly to the Office of Information and Regulatory Affairs, by fax at (202) 395–6566 or by e-mail at *OIRAsubmissions@omb.eop.gov.* Please provide the Commission with a copy of submitted comments so that all comments can be summarized and addressed in the final rule preamble. Refer to the **ADDRESSES** section of this notice of proposed rulemaking for comment submission instructions to the Commission. A copy of the supporting statements for the collection of information discussed above may be obtained by visiting *http://www.RegInfo.gov.* OMB is required to make a decision concerning the collection of information between 30 and 60 days after publication of this document in the **Federal Register**. Therefore, a comment is best assured of having its full effect if OMB receives it within 30 days of publication.

C. Consideration of Costs and Benefits Under Section 15(a) of the CEA

Section 15(a) of the CEA requires the Commission to consider the costs and benefits of its action before promulgating a regulation under the CEA. Section 15(a) of the CEA specifies

[16] *http://www.bls.gov/oes/current/oes113031.htm.*

[17] *http://www.bls.gov/oes/current/oes113031.htm.*

that costs and benefits shall be evaluated in light of five broad areas of market and public concern: (1) Protection of market participants and the public; (2) efficiency, competitiveness, and financial integrity of futures markets; (3) price discovery; (4) sound risk management practices; and (5) other public interest considerations. The Commission may in its discretion give greater weight to any one of the five enumerated areas and could in its discretion determine that, notwithstanding its costs, a particular order is necessary or appropriate to protect the public interest or to effectuate any of the provisions or to accomplish any of the purposes of the CEA.

The proposed rules involve risk management for cleared trades by futures commission merchants, swap dealers, and major swap participants that Are clearing members. The discussion below will consider the proposed rule in light of each section 15(a) concerns.

Position Risk Management for Cleared Trades by Futures Commission Merchants, Swap Dealers, and Major Swap Participants That Are Clearing Members

The Commission is proposing regulations that would require FCMs, SDs, and MSPs to put into place certain risk management procedures.

1. Protection of Market Participants

Good risk management practices among FCMs, SDs, and MSPs help insulate DCOs from financial distress. Moreover, while the rule calls for standard risk mitigation measures, it allows FCMs, SDs, and MSPs to use diverse techniques to implement those measures. This makes it less likely that multiple FCMs, SDs, and MSPs would be exposed to identical blind spots during unexpected market developments.

As far as costs are concerned, regular testing of various systems and financial positions requires significant personnel hours and potentially the services of external vendors. The requirement that records be created and maintained may impose costs on FCMs, SDs, and MSPs. The Commission believes that some costs might only be incremental because it believes that well-managed firms would generally already create and maintain records of this type.

2. Efficiency, Competitiveness, and Financial Integrity of Futures Markets

The integrity of the markets is enhanced with the certainty that the customer's counterparties (*i.e.,* FCMs, SDs, and MSPs, as well as DCOs) are more likely to remain solvent during strenuous financial conditions.

As for the costs related to this rule, rigorous stress tests may encourage conservative margin requirements that reduce customers' ability to leverage their positions. Also, higher costs associated with maintaining more stringent risk management practices will ultimately be passed along to customers, likely in the form of larger spreads, which may reduce the liquidity and efficiency of the market. However, more conservative margin requirements and stringent risk management practices will also help reduce systemic risk thereby protecting the integrity of the financial system as a whole.

3. Sound Risk Management Practices

The rule extends the range of parties responsible for rigorous risk management practices which promotes further stability of the entire financial system. However, as mentioned previously, risk management systems can be costly to implement. The Commission does not know at this time, and requests comment on, how many parties will need to upgrade their systems, if any. Additionally, the Commission requests comment from the public as to what the costs might be to upgrade existing systems or install new systems to comply with the proposed regulation.

4. Other Public Interest Considerations

Requiring a significant investment in risk mitigation structures and procedures by all FCMs, SDs, and MSPs increases the number of entities committing time and resources to development of new techniques that have the potential to advance the practice across the entire industry. Such measures contribute to the overall stability of our global financial system.

List of Subjects

17 CFR Part 1

Conflicts of interest, Futures commission merchants, Major swap participants, Swap dealers.

17 CFR Part 23

Conflicts of interests, Futures commission merchants, Major swap participants, Swap dealers.

In light of the foregoing, the Commission hereby proposes to amend Part 1, and Part 23, as proposed to be added at 75 FR 71390, November 23, 2010, and further amended at 75 FR 81530, December 28, 2010, of Title 17 of the Code of Federal Regulations as follows:

PART 1—GENERAL REGULATIONS UNDER THE COMMODITY EXCHANGE ACT

1. The authority citation for part 1 is revised to read as follows:

Authority: 7 U.S.C. 1a, 2, 2a, 5, 6, 6a, 6b, 6c, 6d, 6e, 6f, 6g, 6h, 6i, 6k, 6l, 6m, 6n, 6o, 6p, 6r, 6s, 7, 7a–1, 7a–2, 7b, 7b–3, 8, 9, 10a, 12, 12a, 12c, 13a, 13a–1, 16, 16a, 19, 21, 23, and 24, as amended by Title VII of the Dodd-Frank Wall Street Reform and Consumer Protection Act, Pub. L. 111–203, 124 Stat. 1376 (2010).

2. Add § 1.73 to part 1 to read as follows:

§ 1.73 Clearing futures commission merchant risk management.

(a) Each futures commission merchant that is a clearing member of a derivatives clearing organization shall:

(1) Establish risk-based limits in the proprietary account and in each customer account based on position size, order size, margin requirements, or similar factors;

(2) Use automated means to screen orders for compliance with the risk-based limits;

(3) Monitor for adherence to the risk-based limits intra-day and overnight;

(4) Conduct stress tests of all positions in the proprietary account and in each customer account that could pose material risk to the futures commission merchant at least once per week;

(5) Evaluate its ability to meet initial margin requirements at least once per week;

(6) Evaluate its ability to meet variation margin requirements in cash at least once per week;

(7) Evaluate its ability to liquidate, in an orderly manner, the positions in the proprietary and customer accounts and estimate the cost of the liquidation at least once per month; and

(8) Test all lines of credit at least once per quarter.

(b) Each futures commission merchant that is a clearing member of a derivatives clearing organization shall:

(1) Establish written procedures to comply with this regulation; and

(2) Keep full, complete, and systematic records documenting its compliance with this regulation.

PART 23—SWAP DEALERS AND MAJOR SWAP PARTICIPANTS

3. The authority citation for part 23 is revised to read as follows:

Authority: 7 U.S.C. 1a, 2, 6, 6a, 6b, 6b–1, 6c, 6p, 6r, 6s, 6t, 9, 9a, 12, 12a, 13b, 13c, 16a, 18, 19, 21.

4. Add § 23.609 to part 23, subpart J, to read as follows:

§ 23.609 Clearing member risk management.

(a) With respect to clearing activities in futures, security futures products, swaps, agreements, contracts, or transactions described in section 2(c)(2)(C)(i) or section 2(c)(2)(D)(i) of the Act, commodity options authorized under section 4c of the Act, or leveraged transactions authorized under section 19 of the Act, each swap dealer or major swap participant that is a clearing member of a derivatives clearing organization shall:

(1) Establish risk-based limits based on position size, order size, margin requirements, or similar factors;

(2) Use automated means to screen orders for compliance with the risk-based limits;

(3) Monitor for adherence to the risk-based limits intra-day and overnight;

(4) Conduct stress tests of all positions at least once per week;

(5) Evaluate its ability to meet initial margin requirements at least once per week;

(6) Evaluate its ability to meet variation margin requirements in cash at least once per week;

(7) Test all lines of credit at least once per quarter; and

(8) Evaluate its ability to liquidate the positions it clears in an orderly manner, and estimate the cost of the liquidation.

(b) Each swap dealer or major swap participant that is a clearing member of a derivatives clearing organization shall:

(1) Establish written procedures to comply with this regulation; and

(2) Keep full, complete, and systematic records documenting its compliance with this regulation.

Issued in Washington, DC, on July 19, 2011, by the Commission.

David A. Stawick,

Secretary of the Commission.

Appendices to Clearing Member Risk Management—Commission Voting Summary and Statements of Commissioners

Note: The following appendices will not appear in the Code of Federal Regulations.

Appendix 1—Commission Voting Summary

On this matter, Chairman Gensler and Commissioners Dunn and Chilton voted in the affirmative; Commissioners O'Malia and Sommers voted in the negative.

Appendix 2—Statement of Chairman Gary Gensler

I support the proposed rulemaking for enhanced risk management for clearing members. One of the primary goals of the Dodd-Frank Wall Street Reform and Consumer Protection Act was to reduce the risk that swaps pose to the economy. The proposed rule would require clearing members, including swap dealers, major swap participants and futures commission merchants to establish risk-based limits on their house and customer accounts. The proposed rule also would require clearing members to establish procedures to, amongst other provisions, evaluate their ability to meet margin requirements, as well as liquidate positions as needed. These risk filters and procedures would help secure the financial integrity of the markets and the clearing system and protect customer funds.

[FR Doc. 2011–19362 Filed 7–29–11; 8:45 am]

BILLING CODE 6351–01–P

COMMODITY FUTURES TRADING COMMISSION

17 CFR Parts 1, 23, and 39

RIN 3038–AD51

Customer Clearing Documentation and Timing of Acceptance for Clearing

AGENCY: Commodity Futures Trading Commission.

ACTION: Notice of proposed rulemaking.

SUMMARY: The Commodity Futures Trading Commission (Commission or CFTC) is proposing rules to implement new statutory provisions enacted by Title VII of the Dodd-Frank Wall Street Reform and Consumer Protection Act. These proposed rules address: The documentation between a customer and a futures commission merchant that clears on behalf of the customer, and the timing of acceptance or rejection of trades for clearing by derivatives clearing organizations and clearing members.

DATES: Submit comments on or before September 30, 2011.

ADDRESSES: You may submit comments, identified by RIN number 3038–AD51, by any of the following methods:

- *Agency Web site, via its Comments Online process: http://comments.cftc.gov.* Follow the instructions for submitting comments through the Web site.
- *Federal eRulemaking Portal: http://www.regulations.gov.* Follow the instructions for submitting comments.
- *Mail:* David A. Stawick, Secretary of the Commission, Commodity Futures Trading Commission, Three Lafayette Centre, 1155 21st Street, NW., Washington, DC 20581.
- *Courier:* Same as mail above.

Please submit your comments using only one method. RIN number, 3038–AD51, must be in the subject field of responses submitted via e-mail, and clearly indicated on written submissions. All comments must be submitted in English, or if not, accompanied by an English translation. Comments will be posted as received to *http://www.cftc.gov.* You should submit only information that you wish to make available publicly. If you wish the CFTC to consider information that you believe is exempt from disclosure under the Freedom of Information Act, a petition for confidential treatment of the exempt information may be submitted according to the procedures established in § 145.9 of the CFTC's regulations.[1]

The CFTC reserves the right, but shall have no obligation, to review, pre-screen, filter, redact, refuse or remove any or all of your submission from *http://www.cftc.gov* that it may deem to be inappropriate for publication, such as obscene language. All submissions that have been redacted or removed that contain comments on the merits of this action will be retained in the public comment file and will be considered as required under the Administrative Procedure Act and other applicable laws, and may be accessible under the Freedom of Information Act.

FOR FURTHER INFORMATION CONTACT: John C. Lawton, Deputy Director and Chief Counsel, 202–418–5480, *jlawton@cftc.gov,* or Christopher A. Hower, Attorney-Advisor, 202–418–6703, *chower@cftc.gov,* Division of Clearing and Intermediary Oversight, Commodity Futures Trading Commission, Three Lafayette Centre, 1155 21st Street, NW., Washington, DC 20581.

SUPPLEMENTARY INFORMATION:

I. Background

On July 21, 2010, President Obama signed the Dodd-Frank Wall Street Reform and Consumer Protection Act (Dodd-Frank Act).[2] Title VII of the Dodd-Frank Act amended the Commodity Exchange Act (CEA or Act)[3] to establish a comprehensive new regulatory framework for swaps. The legislation was enacted to reduce risk, increase transparency, and promote market integrity within the financial system by, among other things: (1) Providing for the registration and comprehensive regulation of swap dealers and major swap participants; (2) imposing clearing and trade execution requirements on standardized derivative products; (3) creating rigorous recordkeeping and real-time reporting

[1] 17 CFR 145.9.

[2] *See* Dodd-Frank Wall Street Reform and Consumer Protection Act, Public Law 111–203, 124 Stat. 1376 (2010).

[3] 7 U.S.C. 1 *et seq.*

regimes; and (4) enhancing the Commission's rulemaking and enforcement authorities with respect to, among others, all registered entities and intermediaries subject to the Commission's oversight. Title VII also includes amendments to the federal securities laws to establish a similar regulatory framework for security-based swaps under the authority of the Securities and Exchange Commission (SEC).

II. Proposed Regulations

A. Introduction

A fundamental premise of the Dodd-Frank Act is that the use of properly regulated central clearing can reduce systemic risk. Another tenet of the Dodd-Frank Act is that open access to clearing by market participants will increase market transparency and promote market efficiency by enabling market participants to reduce counterparty risk and by facilitating offset of open positions. The Commission has proposed extensive regulations addressing open access at the derivatives clearing organization (DCO) level.[4]

Clearing members provide the portals through which market participants gain access to DCOs as well as the first line of risk management. Accordingly, the Commission is proposing regulations to facilitate customer access to clearing and to bolster risk management through timely processing. The proposals address: (i) The documentation between a customer and a futures commission merchant (FCM) that clears on behalf of the customer; and (ii) the timing of acceptance or rejection of trades for clearing by DCOs and clearing members.

B. Customer Clearing Documentation

Section 4d(c) of the CEA, as amended by the Dodd-Frank Act, directs the Commission to require FCMs to implement conflict of interest procedures that address such issues the Commission determines to be appropriate. Similarly, section 4s(j)(5), as added by the Dodd-Frank Act, requires SDs and MSPs to implement conflict of interest procedures that address such issues the Commission determines to be appropriate. Section 4s(j)(5) also requires SDs and MSPs to ensure that any persons providing clearing activities or making determinations as to accepting clearing customers are separated by appropriate informational partitions from persons whose involvement in pricing, trading, or clearing activities might bias their judgment or contravene the core principle of open access.

Pursuant to these provisions, the Commission has proposed § 1.71(d)(1) relating to FCMs and § 23.605(d)(1) relating to SDs and MSPs.[5] These regulations would prohibit SDs and MSPs from interfering or attempting to influence the decisions of affiliated FCMs with regard to the provision of clearing services and activities and would prohibit FCMs from permitting them to do so.

Section 4s(j)(6) of the CEA prohibits an SD or MSP from adopting any process or taking any action that results in any unreasonable restraint on trade or imposes any material anticompetitive burden on trading or clearing, unless necessary or appropriate to achieve the purposes of the Act. The Commission has proposed § 23.607 to implement this provision.[6]

Section 2(h)(1)(B)(ii) of the CEA requires that DCO rules provide for the non-discriminatory clearing of swaps executed bilaterally or through an unaffiliated designated contract market (DCM) or swap execution facility (SEF). The Commission has proposed § 39.12(b)(2) to implement this provision.[7]

On June 16, 2011, the Futures Industry Association (FIA) and the International Swap and Derivatives Association (ISDA), published an FIA–ISDA Cleared Derivatives Execution Agreement (Agreement) as a template for use by swap market participants in negotiating execution-related agreements with counterparties to swaps that are intended to be cleared.[8] The Agreement was developed with the assistance of a committee comprised of representatives of certain FIA and ISDA member firms which included both swap dealers and buy-side firms. More than 60 organizations provided input during the development of the document.[9]

FIA and ISDA emphasized that the use of the agreement is voluntary and may not be necessary and appropriate under all circumstances.[10] FIA and ISDA recognized that many of the provisions in the Agreement will be superseded by new regulatory requirements and the rules of swap execution venues and clearing organizations.[11]

The Agreement includes optional annexes that make the clearing member to one or both of the executing parties a party to the Agreement (the Tri-party annexes). Some of the participants in the process, as well as some market participants that were not included, have expressed concern to the Commission that aspects of the Tri-party annexes may be inconsistent with certain principles of the Dodd-Frank Act.[12]

Specifically, concerns arise in connection with certain provisions that would permit a customer's FCM, in consultation with the SD, to establish specific credit limits for the customer's swap transactions with the SD, and to declare that with regard to trades with that SD, the FCM will only accept for clearing those transactions that fall within these specific limits.[13] The limits set for trades with the SD might be less than the overall limits set for the customer for all trades cleared through the FCM. The result would be to create a ''sublimit'' for the customer for trades with that SD. Some market participants have stated that the setting of such ''sublimits'' would result in restrictions of customer counterparties because, without such ''sublimits,'' the customer may enter into transactions with whomever it chooses, up to its overall limit with the FCM.[14]

Generally, in cleared markets, an FCM does not know the identity of its customer's executing counterparty. Another effect of such sublimits would be to disclose the identity of the customer's counterparty to the FCM. In many instances, the FCM and the customer's counterparty—the SD—might be affiliated entities. Some market participants have stated that such disclosure may lead to ''greater information exchange'' between the FCM and the affiliated SD, which would

[4] *See, e.g.,* 76 FR 3698 (Jan. 20, 2011) (Risk Management Requirements for Derivatives Clearing Organizations).

[5] 75 FR 70152 (Nov. 17, 2010) (Implementation of Conflicts of Interest Policies and Procedures by Futures Commission Merchants and Introducing Brokers); 75 FR 71391 (Nov. 23, 2010) (Implementation of Conflicts of Interest Policies and Procedures by Swap Dealers and Major Swap Participants).

[6] 75 FR 91397 (Nov. 23, 2010) (Regulations Establishing Duties of Swap Dealers and Major Swap Participants).

[7] 76 FR 3698 (Jan. 20, 2011) (Risk Management Requirements for Derivatives Clearing Organizations); 76 FR 13101 (March 10, 2011) (Requirements for Processing, Clearing, and Transfer of Customer Positions).

[8] *See* press release, ''FIA and ISDA Publish Documentation for Cleared Swaps'' (June 16, 2011) at *http://www.futuresindustry.org.*

[9] *Id.*

[10] *Id.*

[11] *Id.*

[12] *See, e.g.,* letter dated April 11, 2011 from Stuart J. Kaswell, Executive Vice President, Managing Director, and General Counsel, Managed Funds Association; letter dated April 19, 2011 from James Cawley, Swaps & Derivatives Market Association. These letters can be found in the Commission's comment file for 76 FR 13101.

[13] *See* Kaswell letter at 9.

[14] *Id.* at 10.

''force the customer to execute with the clearing member's trading desk affiliate.''[15] A third effect of such sublimits could be to delay acceptance of the trades into clearing while the FCM verifies compliance with the sublimits.

Arrangements with these effects potentially conflict with the concepts of open access to clearing and execution of customer transactions on a DCM or SEF on terms that have a reasonable relationship to the best terms available. More specifically, they potentially conflict with proposed §§ 1.71(d)(1), 23.605(d)(1), 23.608, and 39.12. As certain market participants have stated, tri-party agreements of the type described above could lead to undue influence by FCMs on a customer's choice of counterparties (or, conversely, undue influence by SDs on a customer's choice of clearing member). Therefore, they could constrain a customer's opportunity to obtain execution of the trade on the terms that have a reasonable relationship to the best terms available by limiting the number of potential counterparties.[16]

To address these concerns and to provide further clarity in this area, the Commission is now proposing § 1.72 relating to FCMs, § 23.608 relating to SDs and MSPs, and § 39.12(a)(1)(vi) relating to DCOs. These new regulations would prohibit arrangements involving FCMs, SDs, MSPs, or DCOs that would (a) disclose to an FCM, SD, or MSP the identity of a customer's original executing counterparty; (b) limit the number of counterparties with whom a customer may enter into a trade; (c) restrict the size of the position a customer may take with any individual counterparty, apart from an overall credit limit for all positions held by the customer at the FCM; (d) impair a customer's access to execution of a trade on terms that have a reasonable relationship to the best terms available; or (e) prevent compliance with specified time frames for acceptance of trades into clearing.

The Commission believes that implementation of the proposal would reduce risk and foster open access to clearing, as well as execution of customer trades on terms that have a reasonable relationship to the best terms available. Restrictions of the sort prohibited by the proposed rules could increase risk by delaying or blocking access to clearing. They could increase costs and reduce market efficiency by limiting the number of counterparties available for trading. They could restrict access to clearing by limiting the potential clearing members with which a customer could deal.

The Commission is not proposing to dictate here what happens to a trade that is rejected for clearing by an FCM or a DCO. Three outcomes are possible: (i) The parties could try to clear the trade through another DCO or FCM; (ii) the trade could revert to a bilateral transaction; or (iii) the parties could break the trade. The parties should agree in advance, subject to applicable law, which alternative will apply and how to measure and apportion any resulting losses. The Commission believes that the proposals herein will decrease the likelihood that trades will be rejected and diminish the potential for loss in cases where rejection does occur.

The Commission requests comment on whether the proposals will achieve the intended goals and on the costs and benefits of the proposed means of achieving those goals. In particular, the Commission requests comment on:

- Whether the proposal would increase open access to clearing and execution of customer transactions on a DCM or SEF on terms that have a reasonable relationship to the best terms available;
- Whether the proposal could decrease open access to clearing in any way; and
- Whether the proposals would increase risk to DCOs, FCMs, SDs, or MSPs in any way.

C. Time Frames for Acceptance Into Clearing

As noted above, a goal of the Dodd-Frank Act is to reduce risk by increasing the use of central clearing. Minimizing the time between trade execution and acceptance into clearing is an important risk mitigant. The Commission recently proposed § 39.12(b)(7) regarding time frames for clearing.[17] Upon review of the comments received, the Commission is now proposing a revised version of that provision.[18]

As previously proposed, § 39.12(b)(7)(i) required DCOs to coordinate with designated contract markets (DCMs) and swap execution facilities (SEFs) to facilitate prompt and efficient processing of trades. In response to a comment, the Commission now proposes to require prompt, efficient, *and accurate* processing of trades.[19]

Recognizing the key role clearing members play in trade processing and submission of trades to central clearing, the Commission is also now proposing parallel provisions for coordination among DCOs and clearing members. Proposed § 39.12(b)(7)(i)(B) would require DCOs to coordinate with clearing members to establish systems for prompt processing of trades. Proposed §§ 1.74(a) and 23.610(a) would require reciprocal coordination with DCOs by FCMs, SDs, and MSPs that are clearing members.

As previously proposed, § 39.12(b)(7)(ii) required DCOs to accept immediately upon execution all transactions executed on a DCM or SEF. A number of DCOs and other commenters expressed concern that this requirement could expose DCOs to unwarranted risk because DCOs need to be able to screen trades for compliance with applicable clearinghouse rules related to product and credit filters.[20] The Commission recognizes that while immediate acceptance for clearing upon execution currently occurs in some futures markets, it might not be feasible for all cleared markets at this time. For example, where the same cleared product is traded on multiple execution venues, a DCO needs to be able to aggregate the risk of trades coming in to ensure that a clearing member or customer has not exceeded its credit limits. Accordingly, the Commission is proposing to modify § 39.12(b)(7)(ii) to permit DCOs to screen trades against applicable product and credit criteria before accepting or rejecting them. Consistent with principles of open access, the proposal would require that such criteria be non-discriminatory with respect to trading venues and clearing participants.

The Commission continues to believe that acceptance or rejection for clearing in close to real time is crucial both for effective risk management and for the

[15] *Id.*

[16] The Commission previously proposed § 155.7, an execution standard that would apply to swaps available for trading on a DCM or SEF to ensure fair dealing and protect against fraud and other abusive practices. 75 FR 80638, 80648 (Dec. 22, 2010). The proposed rule would require Commission registrants to execute swaps available for trading on a DCM or SEF on terms that have a reasonable relationship to the best terms available.

[17] 76 FR 13101 (March 10, 2011) (Requirements for Processing, Clearing, and Transfer of Customer Positions).

[18] The Commission continues to review comments on other aspects of the March 10 proposal and they will be addressed separately.

[19] *See* letter from Robert Pickel, Executive Vice Chairman, International Swaps and Derivatives Association, dated April 8, 2011.

[20] *See* letter from Craig S. Donohue, Chief Executive Officer, CME Group, dated April 11, 2011; letter from R. Trabue Bland, Vice President and Assistant General Counsel, ICE, dated April 11, 2011; letter from Iona J. Levine, Group General Counsel and Managing Director, LCH.Clearnet, dated April 11, 2011; letter from William H. Navin, Executive Vice President and General Counsel, Options Clearing Corporation, dated April 11, 2011; letter from John M. Damgard, President, Futures Industry Association, dated April 14, 2011.

efficient operation of trading venues.[21] Rather than prescribe a specific length of time, the Commission is proposing as a standard that action be taken ''as quickly as would be technologically practicable if fully automated systems were used.'' The Commission anticipates that this standard would require action in a matter of milliseconds or seconds or, at most, a few minutes, not hours or days.[22]

This is intended to be a performance standard, not the prescription of a particular method of trade processing. The Commission expects that fully automated systems will be in place at some DCOs, FCMs, SDs, and MSPs. Others might have systems with some manual steps. This would be permitted so long as the process could operate within the same time frame as the automated systems.

The Commission recognizes that some trades on a DCM or SEF are executed non-competitively. Examples include block trades and exchanges of futures for physicals (EFPs). A DCO may not be notified immediately upon execution of these trades. Accordingly, as discussed below, they will be treated in the same manner as trades that are not executed on a DCM or SEF.

As previously proposed, §§ 39.12(b)(7)(iii) and 39.12(b)(7)(iv) distinguished between swaps subject to mandatory clearing and swaps not subject to mandatory clearing. Upon review of the comments, the Commission believes that this distinction is unnecessary with regard to processing time frames. If a DCO lists a product for clearing, it should be able to process it regardless of whether clearing is mandatory or voluntary. Therefore, newly proposed § 39.12(b)(7)(iii) would cover all trades not executed on a DCM or SEF. It would require acceptance or rejection by the DCO as quickly after submission as would be technologically practicable if fully automated systems were used.

Proposed § 1.74(b) would set up a parallel requirement for clearing FCMs; proposed § 23.610(b) would set up a parallel requirement for SDs and MSPs that are clearing members. These rules, again, would apply a performance standard, not a prescribed method for achieving it.

The Commission notes that from both a timing perspective and a risk perspective, the most efficient method would be to screen all orders using predetermined criteria established by the rules of the DCO and the provisions of the clearing documentation between the customer and its clearing member. In such a case all trades would be accepted for clearing upon execution because the clearing member and DCO would have already applied their credit and product filters.

A less efficient means would be for the clearing member to authorize the DCO to screen trades on its behalf and to accept or reject according to criteria set by the clearing member. The least efficient would be for the DCO to send a message to the clearing member for each trade requesting acceptance or rejection.

The Commission requests comment on the costs and benefits of the proposal. In particular, the Commission requests comment on whether the performance standard is appropriate and workable.

III. Related Matters

A. Regulatory Flexibility Act

The Regulatory Flexibility Act (RFA) requires that agencies consider whether the regulations they propose will have a significant economic impact on a substantial number of small entities.[23] The Commission previously has established certain definitions of ''small entities'' to be used in evaluating the impact of its regulations on small entities in accordance with the RFA.[24] The proposed regulations would affect FCMs, DCOs, SDs, and MSPs.

The Commission previously has determined, however, that FCMs should not be considered to be small entities for purposes of the RFA.[25] The Commission's determination was based, in part, upon the obligation of FCMs to meet the minimum financial requirements established by the Commission to enhance the protection of customers' segregated funds and protect the financial condition of FCMs generally.[26] The Commission also has previously determined that DCOs are not small entities for the purpose of the RFA.[27]

SDs and MSPs are new categories of registrants. Accordingly, the Commission has not previously addressed the question of whether such persons are, in fact, small entities for purposes of the RFA. Like FCMs, SDs will be subject to minimum capital and margin requirements and are expected to comprise the largest global financial firms. The Commission is required to exempt from SD registration any entities that engage in a de minimis level of swap dealing in connection with transactions with or on behalf of customers. The Commission anticipates that this exemption would tend to exclude small entities from registration. Accordingly, for purposes of the RFA for this rulemaking, the Commission is hereby proposing that SDs not be considered ''small entities'' for essentially the same reasons that FCMs have previously been determined not to be small entities and in light of the exemption from the definition of SD for those engaging in a de minimis level of swap dealing.

The Commission also has previously determined that large traders are not ''small entities'' for RFA purposes.[28] In that determination, the Commission considered that a large trading position was indicative of the size of the business. MSPs, by statutory definition, maintain substantial positions in swaps or maintain outstanding swap positions that create substantial counterparty exposure that could have serious adverse effects on the financial stability of the United States banking system or financial markets. Accordingly, for purposes of the RFA for this rulemaking, the Commission is hereby proposing that MSPs not be considered ''small entities'' for essentially the same reasons that large traders have previously been determined not to be small entities.

Accordingly, the Chairman, on behalf of the Commission, hereby certifies pursuant to 5 U.S.C. 605(b) that the proposed regulations will not have a significant economic impact on a substantial number of small entities. The Commission invites the public to comment on whether SDs and MSPs should be considered small entities for purposes of the RFA.

B. Paperwork Reduction Act

The Paperwork Reduction Act (PRA)[29] imposes certain requirements on Federal agencies (including the Commission) in connection with their conducting or sponsoring any collection of information as defined by the PRA. This proposed rulemaking would result in new collection of information requirements within the meaning of the PRA. The Commission therefore is submitting this proposal to the Office of Management and Budget (OMB) for review in accordance with 44 U.S.C. 3507(d) and 5 CFR 1320.11. The title for this collection of information is

[21] *See* letter from James Cawley, Swaps and Derivatives Market Association, dated April 19, 2011.

[22] The Commission notes that processing times may vary by market or product.

[23] 5 U.S.C. 601 *et seq.*

[24] 47 FR 18618, Apr. 30, 1982.

[25] *Id.* at 18619.

[26] *Id.*

[27] *See* 66 FR 45605, 45609, Aug. 29, 2001.

[28] *Id.* at 18620.

[29] 44 U.S.C. 3501 *et seq.*

''Customer Clearing Documentation and Timing of Acceptance for Clearing.'' An agency may not conduct or sponsor, and a person is not required to respond to, a collection of information unless it displays a currently valid control number. The OMB has not yet assigned this collection a control number.

The collection of information under these proposed regulations is necessary to implement certain provisions of the CEA, as amended by the Dodd-Frank Act. Specifically, it is essential to reducing risk and fostering open access to clearing and execution of customer transactions on a DCM or SEF on terms that have a reasonable relationship to the best terms available by prohibiting restrictions in customer clearing documentation of SDs, MSPs, FCMs, or DCOs that could delay or block access to clearing, increase costs, and reduce market efficiency by limiting the number of counterparties available for trading. The proposed regulations are also crucial both for effective risk management and for the efficient operation of trading venues among SDs, MSPs, FCMs, and DCOs.

If the proposed regulations are adopted, responses to this collection of information would be mandatory. The Commission will protect proprietary information according to the Freedom of Information Act and 17 CFR part 145, ''Commission Records and Information.'' In addition, section 8(a)(1) of the CEA strictly prohibits the Commission, unless specifically authorized by the CEA, from making public ''data and information that would separately disclose the business transactions or market positions of any person and trade secrets or names of customers.'' The Commission is also required to protect certain information contained in a government system of records according to the Privacy Act of 1974, 5 U.S.C. 552a.

1. Information Provided by Reporting Entities/Persons

SDs, MSPs, FCMs, and DCOs would be required to develop and maintain written customer clearing documentation in compliance with proposed regulations 1.72, 23.608, and 39.12. Proposed regulation 39.12(b)(7)(i)(B) would require DCOs to coordinate with clearing members to establish systems for prompt processing of trades. Proposed regulations 1.74(a) and 23.610(a) require reciprocal coordination with DCOs by FCMs, SDs, and MSPs that are clearing members.

The annual burden associated with these proposed regulations is estimated to be 16 hours, at an annual cost of $1,600 for each FCM, SD, and MSP. Burden means the total time, effort, or financial resources expended by persons to generate, maintain, retain, disclose, or provide information to or for a federal agency. The Commission has characterized the annual costs as initial costs because the Commission anticipates that the cost burdens will be reduced dramatically over time as the documentation and procedures required by the proposed regulations become increasingly standardized within the industry.

Proposed §§ 1.72 and 23.608 would require each FCM, SD, and MSP to ensure compliance with the proposed regulations. Maintenance of contracts is prudent business practice and the Commission anticipates that SDs and MSPs already maintain some form of this documentation. Additionally, the Commission believes that much of the existing customer clearing documentation already complies with the proposed rules, and therefore that compliance will require a minimal burden.

In addition to the above, the Commission anticipates that FCMs, SDs, and MSPs will spend an average of 16 hours per year drafting and, as needed, updating customer clearing documentation to ensure compliance required by proposed §§ 1.72 and 23.608.

For each DCO, the annual burden associated with these proposed regulations is estimated to be 40 hours, at an annual cost of $4,000. Burden means the total time, effort, or financial resources expended by persons to generate, maintain, retain, disclose, or provide information to or for a federal agency. The Commission has characterized the annual costs as initial costs as the Commission anticipates that the cost burdens will be reduced dramatically over time as once the documentation and procedures required by the proposed regulations are implemented, any additional expenditure related to § 39.12 likely would be limited to the time required to review and, as needed, amend, existing documentation and procedures.

Proposed 39.12(b)(7) would require each DCO to coordinate with clearing members to establish systems for prompt processing of trades. The Commission believes that this is currently a practice of DCOs. Accordingly, any additional expenditure related to § 39.12(b)(7) likely would be limited to the time initially required to review and, as needed, amend, existing trade processing procedures to ensure that they conform to all of the required elements and to coordinate with FCMs, SDs, and MSPs to establish reciprocal procedures.

The Commission anticipates that DCOs will spend an average of 20 hours per year drafting and, as needed, updating the written policies and procedures to ensure compliance required by proposed § 39.12, and 20 hours per year coordinating with FCMs, SDs, and MSPs on reciprocal procedures.

The hour burden calculations below are based upon a number of variables such as the number of FCMs, SDs, MSPs, and DCOs in the marketplace and the average hourly wage of the employees of these registrants that would be responsible for satisfying the obligations established by the proposed regulation.

There are currently 134 FCMs and 14 DCOs based on industry data. SDs and MSPs are new categories of registrants. Accordingly, it is not currently known how many SD and MSPs will become subject to these rules, and this will not be known to the Commission until the registration requirements for these entities become effective after July 16, 2011, the date on which the Dodd-Frank Act becomes effective. While the Commission believes there will be approximately 200 SD and 50 MSPs, it has taken a conservative approach, for PRA purposes, in estimating that there will be a combined number of 300 SDs and MSPs who will be required to comply with the recordkeeping requirements of the proposed rules. The Commission estimated the number of affected entities based on industry data.

According to recent Bureau of Labor Statistics, the mean hourly wage of an employee under occupation code 11–3031, ''Financial Managers,'' (which includes operations managers) that is employed by the ''Securities and Commodity Contracts Intermediation and Brokerage'' industry is $74.41.[30] Because SDs, MSPs, FCMs, and DCOs include large financial institutions whose operations management employees' salaries may exceed the mean wage, the Commission has estimated the cost burden of these proposed regulations based upon an average salary of $100 per hour.

Accordingly, the estimated hour burden was calculated as follows:

Developing Written Procedures for Compliance, and Maintaining Records Documenting Compliance for SDs and MSPs. This hourly burden arises from the proposed requirement that SDs and MSPs make and maintain records documenting compliance related to client clearing documentation.

[30] *http://www.bls.gov/oes/current/oes113031.htm.*

Number of registrants: 300.

Frequency of collection: as needed.

Estimated number of annual responses per registrant: 1.

Estimated aggregate number of annual responses: 300.

Estimated annual hour burden per registrant: 16 hours.

Estimated aggregate annual hour burden: 4,800 burden hours [300 registrants × 16 hours per registrant].

Developing Written Procedures for Compliance, and Maintaining Records Documenting Compliance for FCMs. This hourly burden arises from the proposed requirement that FCMs make and maintain records documenting compliance related to client clearing documentation.

Number of registrants: 134.

Frequency of collection: as needed.

Estimated number of annual responses per registrant: 1.

Estimated aggregate number of annual responses: 134.

Estimated annual hour burden per registrant: 16 hours.

Estimated aggregate annual hour burden: 2,144 burden hours [134 registrants × 16 hours per registrant].

Drafting and Updating Trade Processing Procedures for DCOs. This hour burden arises from the time necessary to develop and periodically update the trade processing procedures required by the proposed regulations.

Number of registrants: 14.

Frequency of collection: Initial drafting, updating as needed.

Estimated number of annual responses per registrant: 1.

Estimated aggregate number of annual responses: 14.

Estimated annual hour burden per registrant: 40 hours.

Estimated aggregate annual hour burden: 560 burden hours [14 registrants × 40 hours per registrant].

Based upon the above, the aggregate hour burden cost for all registrants is 7,504 burden hours and $750,400 [7,504 × $100 per hour].

2. Information Collection Comments

The Commission invites the public and other federal agencies to comment on any aspect of the recordkeeping burdens discussed above. Pursuant to 44 U.S.C. 3506(c)(2)(B), the Commission solicits comments in order to: (i) Evaluate whether the proposed collection of information is necessary for the proper performance of the functions of the Commission, including whether the information will have practical utility; (ii) evaluate the accuracy of the Commission's estimate of the burden of the proposed collection of information; (iii) determine whether there are ways to enhance the quality, utility, and clarity of the information to be collected; and (iv) minimize the burden of the collection of information on those who are to respond, including through the use of automated collection techniques or other forms of information technology.

Comments may be submitted directly to the Office of Information and Regulatory Affairs, by fax at (202) 395–6566 or by e-mail at *OIRAsubmissions@omb.eop.gov.* Please provide the Commission with a copy of submitted comments so that all comments can be summarized and addressed in the final rule preamble. Refer to the Addresses section of this notice of proposed rulemaking for comment submission instructions to the Commission. A copy of the supporting statements for the collections of information discussed above may be obtained by visiting *RegInfo.gov.* OMB is required to make a decision concerning the collection of information between 30 and 60 days after publication of this document in the **Federal Register.** Therefore, a comment is best assured of having its full effect if OMB receives it within 30 days of publication.

C. Consideration of Costs and Benefits Under Section 15(a) of the CEA

Section 15(a) of the CEA requires the Commission to consider the costs and benefits of its action before promulgating a regulation under the CEA. Section 15(a) of the CEA specifies that costs and benefits shall be evaluated in light of five broad areas of market and public concern: (1) Protection of market participants and the public; (2) efficiency, competitiveness, and financial integrity of futures markets; (3) price discovery; (4) sound risk management practices; and (5) other public interest considerations. The Commission may in its discretion give greater weight to any one of the five enumerated areas and could in its discretion determine that, notwithstanding its costs, a particular order is necessary or appropriate to protect the public interest or to effectuate any of the provisions or to accomplish any of the purposes of the CEA.

The proposed rules have two major components: (i) The documentation between a customer and a futures commission merchant that clears on behalf of the customer; and (ii) the timing of acceptance or rejection of trades for clearing by derivatives clearing organizations and clearing members. The discussion below will consider each component in light of the section 15(a) concerns.

A. Documentation Between a Customer and Futures Commission Merchant That Clears on Behalf of the Customer

The Commission is proposing regulations that would prohibit arrangements involving FCMs, SDs, MSPs, or DCOs that would (a) disclose to an FCM, SD, or MSP the identity of a customer's counterparty; (b) limit the number of counterparties with whom a customer may enter into swaps; (c) restrict the size of the position a customer may take with any individual counterparty, apart from an overall limit for all positions held by the customer at the FCM; (d) impair a customer's access to execution of trades on a DCM or SEF on terms that have a reasonable relationship to the best terms available; or (e) prevent compliance with specified time frames for acceptance of trades into clearing.

1. Protection of Market Participants and the Public

This measure protects the customer from any discriminatory behavior by potential clearing members or counterparties and helps ensure that customers have open access to the markets and an opportunity to obtain execution on competitive terms. The proposal would also promote financial integrity by removing potential obstacles such as more documentation requirements imposed by dealers or unnecessary restrictions on trading by a third-party, and by accelerating the timeframe for acceptance or rejection of a trade for clearing thereby reducing risk of delay or uncertainty as to whether a swap will be accepted or rejected for clearing. For example, by contrast, under a tri-party agreement, an FCM might have to evaluate each customer transaction not only against the customer's overall credit limit but also against a sub-limit for each counterparty which can delay acceptance.

As far as costs are concerned, the possibility of ''breakage'' remains for SDs and other counterparties. However, this concern is mitigated by the timelines required in the second section of this rule, which reduce the likelihood that a SD would have time to enter into other transactions before the one in view is accepted or rejected for clearing. Similarly, if a SD has to enter into a replacement trade, the costs will be mitigated by the tight timeline, because the SD would know quickly whether the trade was accepted or rejected for clearing. As noted above, the process of evaluating individual transactions against counterparty sub-limits could

delay notification of acceptance or rejection for clearing. In the absence of this rule, the cost to trade will have to account for these factors and additional market risk during that time.

2. Efficiency, Competitiveness, and Financial Integrity of Futures Markets

This rule helps prevent the disclosure, to the FCM, of the identity of the counterparty of its customer. Such lack of disclosure promotes integrity in the market by ensuring that all participants who meet certain qualifying criteria for trading have open access to all available counterparties because intermediaries will be unable to set sub-limits by counterparty. Moreover, in the absence of this rule, tri-party agreements or other similar arrangements among FCMs, SDs or MSPs and customers could result in matching processes that have the potential to be time intensive. Preventing these agreements will promote faster matching which may increase liquidity through lower transaction costs.

This rule also prevents customers from being penalized (or having distorted commercial incentives) in their choice of FCM due to previous transactions with a given FCM or SD. As a consequence, this rule also has the potential to promote competition among FCMs to deliver services efficiently. Lastly, this rule would reduce duplicative risk management because DCOs and their members already have access to information necessary to perform credit analysis on individual customers and counterparties. SDs would be unnecessarily duplicating work that has already been done.

3. Price Discovery

By not forcing a customer to transact with counterparties who may be offering less attractive terms, this rule may improve pricing. In addition, adhering to time frames specified for acceptance of trades into clearing helps to prevent stale prices.

4. Sound Risk Management Practices

The rule does not affect the risk management structure of FCMs. Moreover, by preventing customers from learning their counterparty's identity, the responsibility for risk management remains clear. The FCM must be responsible for evaluating each customer's credit risk. It cannot rely on a counterparty to conduct due diligence. Moreover, preserving anonymity in the market increases the number of available counterparties, which leads to a more liquid market, thereby reducing risk.

As mentioned before, to the extent that the SD experiences ''breakage,'' it exposes a SD to counterparty risk which is a potential cost. However, by facilitating quicker acceptance or rejection into clearing, the proposal would mitigate such costs by compressing the time within which the counterparty exposure would exist.

B. Timing of Acceptance or Rejection of Trades for Clearing by Derivatives Clearing Organizations and Clearing Members

The Commission is proposing regulations that would require prompt, efficient, and accurate processing of trades, and require DCOs to coordinate with clearing members to establish systems for prompt processing of trades.

1. Protection of Market Participants

Rapid processing protects market participants from acting on bad information by making additional trades under the presumption that an initial trade has gone through if that trade may, in fact, not clear. As mentioned, compressing the time for acceptance or rejection for clearing also reduces the time within exposures can accumulate if a trade is rejected.

As far as costs are concerned, coordination among the DCOs, FCMs, SDs and MSPs in order to design and implement a system to clear transactions ''as quickly as would be technologically practicable if fully automated systems were used'' will likely require capital investment and personnel hours in some instances. The Commission believes, however, that DCOs and clearing members may already be using procedures that comply with the standard. To the extent that participants do not currently have automated systems, they made need to install or upgrade existing systems to comply.

2. Efficiency, Competitiveness, and Financial Integrity of Futures Markets

Rapid clearing helps ensure that eligible counterparties will not be tied up in transactions that do not clear. They will be available to other eligible customers. This increases both competitiveness and efficiency of the market. In addition, extensive coordination among the DCOs, FCMs, SDs, and MSPs has the potential to standardize processes and technologies to support this rule. That reduces switching costs for customers and increases competitiveness.

Costs will be incurred in developing systems and procedures for those products and participants where the proposed standards are not currently being met. The Commission anticipates, however, that eventually such costs would be compensated for by increased efficiency and market integrity. The Commission does not know at this time, and requests comment on, how many parties will need to upgrade their systems, if any. Additionally, the Commission requests comment from the public as to what the costs might be to upgrade existing systems or install new systems to comply with the proposed regulation.

3. Price Discovery

Requiring rapid clearing encourages screening for credit worthiness of customers. That helps ensure that only bids and offers of qualified parties are contained in the limit order book which helps protect its informational value. Moreover, pricing feedback from cleared transactions will reach the market more quickly.

4. Sound Risk Management Practices

Timely clearing allows each party to the transaction to act more quickly if they need to implement a hedge or other transactions related to the swap. This reduces the risk associated with potential adverse movements of the market while waiting for clearing to occur. However, if some of the processes are manual, the mandate for greater speed increases the possibility of errors.

5. Other Public Interest Considerations

Rapid clearing makes U.S. based DCOs, FCMs, SDs, and MSPs more attractive as service providers for global swap business. Furthermore, the proposal would facilitate achievement of the overarching Dodd-Frank Act mandate to promote clearing.

List of Subjects

17 CFR Part 1

Conflicts of interest, Futures commission merchants, Major swap participants, Swap dealers.

17 CFR Part 23

Conflicts of interests, Futures commission merchants, Major swap participants, Swap dealers.

17 CFR Part 39

Derivatives clearing organizations, Risk management, Swaps.

In light of the foregoing, the Commission hereby proposes to amend part 1; part 23, as proposed to be added at 75 FR 71390, November 23, 2010, and further amended at 75 FR 81530, December 28, 2010; and part 39, as proposed to be amended at 76 FR 13101, March 10, 2011, of Title 17 of the Code of Federal Regulations as follows:

PART 1—GENERAL REGULATIONS UNDER THE COMMODITY EXCHANGE ACT

1. The authority citation for part 1 is revised to read as follows:

Authority: 7 U.S.C. 1a, 2, 2a, 5, 6, 6a, 6b, 6c, 6d, 6e, 6f, 6g, 6h, 6i, 6k, 6l, 6m, 6n, 6o, 6p, 6r, 6s, 7, 7a–1, 7a–2, 7b, 7b–3, 8, 9, 10a, 12, 12a, 12c, 13a, 13a–1, 16, 16a, 19, 21, 23, and 24, as amended by Title VII of the Dodd-Frank Wall Street Reform and Consumer Protection Act, Pub. L. 111–203, 124 Stat. 1376 (2010).

2. Add § 1.72 to part 1 to read as follows:

§ 1.72 Restrictions on customer clearing arrangements.

No futures commission merchant providing clearing services to customers shall enter into an arrangement that:

(a) Discloses to the futures commission merchant or any swap dealer or major swap participant the identity of a customer's original executing counterparty;

(b) Limits the number of counterparties with whom a customer may enter into a trade;

(c) Restricts the size of the position a customer may take with any individual counterparty, apart from an overall limit for all positions held by the customer at the futures commission merchant;

(d) Impairs a customer's access to execution of a trade on terms that have a reasonable relationship to the best terms available; or

(e) Prevents compliance with the time frames set forth in § 1.73(a)(9)(ii), § 23.609(a)(9)(ii), or § 39.12(b)(7) of this chapter.

3. Add § 1.74 to part 1 to read as follows:

§ 1.74 Futures commission merchant acceptance for clearing.

(a) Each futures commission merchant that is a clearing member of a derivatives clearing organization shall coordinate with each derivatives clearing organization on which it clears to establish systems that enable the futures commission merchant, or the derivatives clearing organization acting on its behalf, to accept or reject each trade submitted to the derivatives clearing organization for clearing by or for the futures commission merchant or a customer of the futures commission merchant as quickly as would be technologically practicable if fully automated systems were used; and

(b) Each futures commission merchant that is a clearing member of a derivatives clearing organization shall accept or reject each trade submitted by or for it or its customers as quickly as would be technologically practicable if fully automated systems were used; a clearing futures commission merchant may meet this requirement by:

(1) Establishing systems to pre-screen orders for compliance with criteria specified by the clearing futures commission merchant;

(2) Establishing systems that authorize a derivatives clearing organization to accept or reject on its behalf trades that meet, or fail to meet, criteria specified by the clearing futures commission merchant; or

(3) Establishing systems that enable the clearing futures commission merchant to communicate to the derivatives clearing organization acceptance or rejection of each trade as quickly as would be technologically practicable if fully automated systems were used.

PART 23—SWAP DEALERS AND MAJOR SWAP PARTICIPANTS

4. The authority citation for part 23 is revised to read as follows:

Authority: 7 U.S.C. 1a, 2, 6, 6a, 6b, 6b–1, 6c, 6p, 6r, 6s, 6t, 9, 9a, 12, 12a, 13b, 13c, 16a, 18, 19, 21.

5. Add § 23.608 to part 23, subpart J, to read as follows:

§ 23.608 Restrictions on counterparty clearing relationships.

No swap dealer or major swap participant entering into a cleared swap with a counterparty that is a customer of a futures commission merchant shall enter into an arrangement that:

(a) Discloses to the futures commission merchant or any swap dealer or major swap participant the identity of a customer's original executing counterparty;

(b) Limits the number of counterparties with whom a customer may enter into a trade;

(c) Restricts the size of the position a customer may take with any individual counterparty, apart from an overall limit for all positions held by the customer at the futures commission merchant;

(d) Impairs a customer's access to execution of a trade on terms that have a reasonable relationship to the best terms available; or

(e) Prevents compliance with the time frames set forth in § 1.73(a)(9)(ii), § 23.609(a)(9)(ii), or § 39.12(b)(7) of this chapter.

6. Add § 23.610 to part 23, subpart J, to read as follows:

§ 23.610 Clearing member acceptance for clearing.

(a) Each swap dealer or major swap participant that is a clearing member of a derivatives clearing organization shall coordinate with each derivatives clearing organization on which it clears to establish systems that enable the clearing member, or the derivatives clearing organization acting on its behalf, to accept or reject each trade submitted to the derivatives clearing organization for clearing by or for the clearing member as quickly as would be technologically practicable if fully automated systems were used; and

(b) Each swap dealer or major swap participant that is a clearing member of a derivatives clearing organization shall accept or reject each trade submitted by or for it as quickly as would be technologically practicable if fully automated systems were used; a clearing member may meet this requirement by:

(1) Establishing systems to pre-screen orders for compliance with criteria specified by the clearing member;

(2) Establishing systems that authorize a derivatives clearing organization to accept or reject on its behalf trades that meet, or fail to meet, criteria specified by the clearing member; or

(3) Establishing systems that enable the clearing member to communicate to the derivatives clearing organization acceptance or rejection of each trade as quickly as would be technologically practicable if fully automated systems were used.

PART 39—DERIVATIVES CLEARING ORGANIZATIONS

7. Revise the authority citation for part 39 to read as follows:

Authority: 7 U.S.C. 1a, 2, 5, 6, 6d, 7a–1, 7a–2, and 7b as amended by the Dodd-Frank Wall Street Reform and Consumer Protection Act, Pub. L. 111–203, 124 Stat. 1376.

Subpart B—Compliance With Core Principles

8. In § 39.12, add paragraph (a)(1)(vi) to read as follows:

(a) * * *

(1) * * *

(vi) No derivatives clearing organization shall require as a condition of accepting a swap for clearing that a futures commission merchant enter into an arrangement with a customer that:

(A) Discloses to the futures commission merchant or any swap dealer or major swap participant the identity of a customer's original executing counterparty;

(B) Limits the number of counterparties with whom a customer may enter into trades;

(C) Restricts the size of the position a customer may take with any individual counterparty, apart from an overall limit for all positions held by the customer at the futures commission merchant;

(D) Impairs a customer's access to execution of a trade on terms that have a reasonable relationship to the best terms available; or

(E) Prevents compliance with the time frames set forth in § 1.73(a)(9)(ii), § 23.609(a)(9)(ii), or § 39.12(b)(7) of this chapter.

9. Amend § 39.12 by:

a. Redesignating paragraph (b)(7)(v) as paragraph (b)(8); and

b. Revising § 39.12(b)(7) to read as follows:

(i) *Coordination with markets and clearing members*

(A) Each derivatives clearing organization shall coordinate with each designated contract market and swap execution facility that lists for trading a product that is cleared by the derivatives clearing organization in developing rules and procedures to facilitate prompt, efficient, and accurate processing of all transactions submitted to the derivatives clearing organization for clearing.

(B) Each derivatives clearing organization shall coordinate with each clearing member that is a futures commission merchant, swap dealer, or major swap participant to establish systems that enable the clearing member, or the derivatives clearing organization acting on its behalf, to accept or reject each trade submitted to the derivatives clearing organization for clearing by or for the clearing member or a customer of the clearing member as quickly as would be technologically practicable if fully automated systems were used.

(ii) *Transactions executed competitively on or subject to the rules of a designated contract market or swap execution facility.* A derivatives clearing organization shall have rules that provide that the derivatives clearing organization will accept or reject for clearing as quickly after execution as would be technologically practicable if fully automated systems were used, all contracts that are listed for clearing by the derivatives clearing organization and are executed competitively on a designated contract market or a swap execution facility. The derivatives clearing organization shall accept all trades:

(A) For which the executing parties have clearing arrangements in place with clearing members of the derivatives clearing organization;

(B) For which the executing parties identify the derivatives clearing organization as the intended clearinghouse; and

(C) That satisfy the criteria of the derivatives clearing organization, including but not limited to applicable risk filters; provided that such criteria are non-discriminatory across trading venues and are applied as quickly as would be technologically practicable if fully automated systems were used.

(iii) *Swaps not executed on or subject to the rules of a designated contract market or a swap execution facility or executed non-competitively on or subject to the rules of a designated contract market or a swap execution facility.* A derivatives clearing organization shall have rules that provide that the derivatives clearing organization will accept or reject for clearing as quickly after submission to the derivatives clearing organization as would be technologically practicable if fully automated systems were used, all swaps that are listed for clearing by the derivatives clearing organization and are not executed on a designated contract market or a swap execution facility. The derivatives clearing organization shall accept all trades:

(A) That are submitted by the parties to the derivatives clearing organization, in accordance with § 23.506 of this chapter;

(B) For which the executing parties have clearing arrangements in place with clearing members of the derivatives clearing organization;

(C) For which the executing parties identify the derivatives clearing organization as the intended clearinghouse; and

(D) That satisfy the criteria of the derivatives clearing organization, including but not limited to applicable risk filters; provided that such criteria are non-discriminatory across trading venues and are applied as quickly as would be technologically practicable if fully automated systems were used.

Issued in Washington, DC, on July 19, 2011, by the Commission.

David A. Stawick,

Secretary of the Commission.

Appendices to Customer Clearing Documentation and Timing of Acceptance for Clearing—Commission Voting Summary and Statements of Commissioners

Note: The following appendices will not appear in the Code of Federal Regulations

Appendix 1—Commission Voting Summary

On this matter, Chairman Gensler and Commissioners Dunn and Chilton voted in the affirmative; Commissioners O'Malia and Sommers voted in the negative.

Appendix 2—Statement of Chairman Gary Gensler

I support the proposed rulemaking for customer clearing documentation and timing of acceptance for clearing. The proposed rule promotes market participants' access to central clearing, increases market transparency and supports market efficiency. This proposal will foster bilateral clearing arrangements between customers and their futures commission merchants. This proposal also re-proposes certain time-frame provisions of the Commission's proposed rule in February related to straight-through processing.

[FR Doc. 2011–19365 Filed 7–29–11; 8:45 am]

BILLING CODE P

DEPARTMENT OF HOMELAND SECURITY

Coast Guard

33 CFR Part 165

[Docket No. USCG–2010–1145]

RIN 1625–AA11

Regulated Navigation Area; Pacific Sound Resources and Lockheed Shipyard EPA Superfund Cleanup Sites, Elliott Bay, Seattle, WA

AGENCY: Coast Guard, DHS.

ACTION: Notice of proposed rulemaking.

SUMMARY: The Coast Guard proposes to establish a permanent regulated navigation area (RNA) on a portion of Elliott Bay in Seattle, Washington. The RNA would protect the seabed in portions of the bay that are subject to the U.S. Environmental Protection Agency (EPA)'s Pacific Sound Resources (PSR) and Lockheed Shipyard superfund cleanup remediation efforts. This RNA would prohibit activities that would disturb the seabed, such as anchoring, dragging, trawling, spudding or other activities that involve disrupting the integrity of the sediment caps that cover the superfund sites. It will not affect transit or navigation of the area.

DATES: Comments and related material must be received by the Coast Guard on or before October 31, 2011. Requests for public meetings must be received by the Coast Guard on or before September 15, 2011.

ADDRESSES: You may submit comments identified by docket number USCG–2010–1145 using any one of the following methods:

(1) *Federal eRulemaking Portal: http://www.regulations.gov.*

(2) *Fax:* 202–493–2251.

(3) *Mail:* Docket Management Facility (M–30), U.S. Department of

Transportation, West Building Ground Floor, Room W12–140, 1200 New Jersey Avenue, SE., Washington, DC 20590–0001.

(4) *Hand delivery:* Same as mail address above, between 9 a.m. and 5 p.m., Monday through Friday, except Federal holidays. The telephone number is 202–366–9329.

To avoid duplication, please use only one of these four methods. See the ''Public Participation and Request for Comments'' portion of the **SUPPLEMENTARY INFORMATION** section below for instructions on submitting comments.

FOR FURTHER INFORMATION CONTACT: If you have questions on this proposed rule, call or e-mail LTJG Ian Hanna, Waterways Management Division, Sector Puget Sound, Coast Guard; telephone 206–217–6045, e-mail *SectorSeattleWWM@uscg.mil.* If you have questions on viewing or submitting material to the docket, call Renee V. Wright, Program Manager, Docket Operations, telephone 202–366–9826.

SUPPLEMENTARY INFORMATION:

Public Participation and Request for Comments

We encourage you to participate in this rulemaking by submitting comments and related materials. All comments received will be posted without change to *http://www.regulations.gov* and will include any personal information you have provided.

Submitting Comments

If you submit a comment, please include the docket number for this rulemaking (USCG–2010–1145), indicate the specific section of this document to which each comment applies, and provide a reason for each suggestion or recommendation. You may submit your comments and material online (via *http://www.regulations.gov*) or by fax, mail, or hand delivery, but please use only one of these means. If you submit a comment online via *http://www.regulations.gov*, it will be considered received by the Coast Guard when you successfully transmit the comment. If you fax, hand deliver, or mail your comment, it will be considered as having been received by the Coast Guard when it is received at the Docket Management Facility. We recommend that you include your name and a mailing address, an e-mail address, or a telephone number in the body of your document so that we can contact you if we have questions regarding your submission.

To submit your comment online, go to *http://www.regulations.gov*, click on the ''submit a comment'' box, which will then become highlighted in blue. In the ''Document Type'' drop down menu select ''Proposed Rule'' and insert ''USCG–2010–1145'' in the ''Keyword'' box. Click ''Search'' then click on the balloon shape in the ''Actions'' column. If you submit your comments by mail or hand delivery, submit them in an unbound format, no larger than 8½; by 11 inches, suitable for copying and electronic filing. If you submit comments by mail and would like to know that they reached the Facility, please enclose a stamped, self-addressed postcard or envelope. We will consider all comments and material received during the comment period and may change the rule based on your comments.

Viewing Comments and Documents

To view comments, as well as documents mentioned in this preamble as being available in the docket, go to *http://www.regulations.gov*, click on the ''read comments'' box, which will then become highlighted in blue. In the ''Keyword'' box insert ''USCG–2010–1145'' and click ''Search.'' Click the ''Open Docket Folder'' in the ''Actions'' column. You may also visit the Docket Management Facility in Room W12–140 on the ground floor of the Department of Transportation West Building, 1200 New Jersey Avenue, SE., Washington, DC 20590, between 9 a.m. and 5 p.m., Monday through Friday, except Federal holidays. We have an agreement with the Department of Transportation to use the Docket Management Facility.

Privacy Act

Anyone can search the electronic form of comments received into any of our dockets by the name of the individual submitting the comment (or signing the comment, if submitted on behalf of an association, business, labor union, etc.). You may review a Privacy Act notice regarding our public dockets in the January 17, 2008, issue of the **Federal Register** (73 FR 3316).

Public Meeting

We do not now plan to hold a public meeting. But you may submit a request for one on or before September 15, 2011 using one of the four methods specified under **ADDRESSES**. Please explain why you believe a public meeting would be beneficial. If we determine that one would aid this rulemaking, we will hold one at a time and place announced by a later notice in the **Federal Register**.

Background and Purpose

The PSR superfund site, which is located on the north shore of West Seattle within Elliott Bay, and northwest of the mouth of the Duwamish river, was created by the EPA to cover the remains of the Wyckoff West Seattle Wood Treating Facility. The wood treating facility, which was in operation between 1909 and 1994, was mostly located on a pile-supported facility extending into Elliott Bay. The area was added to the federal Superfund National Priorities List in May 1994. Later that year the entire wood treatment facility was demolished and approximately 4000 cubic yards of highly contaminated soil and process sludge were removed from the site. Construction of a subsurface physical containment barrier was started in 1996 and completed in 1999. The final sediment cap, completed in 2004, is approximately 58-acres which includes approximately 1500 linear feet of shoreline, and intertidal and subtidal areas to depth of about 300 feet.

The Lockheed Shipyard Sediment Operable Unit consists of contaminated near shore sediments within and adjacent to the Lockheed Shipyard on Harbor Island. Harbor Island is located approximately one mile southwest of the Central Business District of Seattle, in King County, Washington, and lies at the mouth of the Duwamish Waterway on the southern edge of Elliott Bay. The Lockheed Shipyard sediments are located on the west side of Harbor Island and face the West Waterway of the Duwamish Waterway. The final site does not protrude a significant distance into the West Duwamish waterway. Lockheed Shipyards acquired established shipbuilding operations in 1959 and the facility until 1986. In April 1997, Lockheed sold the upland property and its legal rights to the submerged portions of the site to the Port of Seattle. The remedy for the contaminated sediments included demolition of 3 piers, three shipways and one finger pier. The piers and shipways primarily consist of timber superstructures supported by approximately 6000 piles. Contaminants found in sediments which were either dredged or capped are arsenic, copper, lead, mercury, zinc, PAHs and PCBs. The metal contaminants were associated with sand blast grit and paint clips.

Remedial actions for both of these sites as established by the EPA include preventing use of large anchors on the cap. This rulemaking is necessary to assist the EPA in that remedial action.

Discussion of Proposed Rule

This rule is necessary to prevent disturbance of the PSR and Lockheed Shipyard sediment caps. It does so by restricting anchoring, dragging, trawling, spudding or other activities that involve disrupting the integrity of the cap in an RNA around the sediment caps. This RNA is similar to RNAs which protect other caps in the area. Enforcement of this RNA will be managed by Coast Guard Sector Puget Sound assets including Vessel Traffic Service Puget Sound through radar and closed circuit television sensors. The Captain of the Port Puget Sound may also be assisted by other government agencies in the enforcement of this zone.

Regulatory Analyses

We developed this proposed rule after considering numerous statutes and executive orders related to rulemaking. Below we summarize our analyses based on 13 of these statutes or executive orders.

Regulatory Planning and Review

This proposed rule is not a significant regulatory action under section 3(f) of Executive Order 12866, Regulatory Planning and Review, and does not require an assessment of potential costs and benefits under section 6(a)(3) of that Order. The Office of Management and Budget has not reviewed it under that Order. This expectation is based on the fact that the RNA established by the rule would encompass a small area that should not impact commercial or recreational traffic, and prohibited activities are not routine for the designated areas.

Small Entities

Under the Regulatory Flexibility Act (5 U.S.C. 601–612), we have considered whether this proposed rule would have a significant economic impact on a substantial number of small entities. The term ''small entities'' comprises small businesses, not-for-profit organizations that are independently owned and operated and are not dominant in their fields, and governmental jurisdictions with populations of less than 50,000.

The Coast Guard certifies under 5 U.S.C. 605(b) that this proposed rule would not have a significant economic impact on a substantial number of small entities. This rule would affect the following entities, some of which may be small entities: The owners or operators of vessels intending to anchor, dredge, spud, lay cable or disturb the seabed in any fashion when this rule is in effect. The RNA would not have a significant economic impact on small entities due to its minimal restrictive area and the opportunity for a waiver to be granted for any legitimate use of the seabed.

If you think that your business, organization, or governmental jurisdiction qualifies as a small entity and that this rule would have a significant economic impact on it, please submit a comment (see **ADDRESSES**) explaining why you think it qualifies and how and to what degree this rule would economically affect it.

Assistance for Small Entities

Under section 213(a) of the Small Business Regulatory Enforcement Fairness Act of 1996 (Pub. L. 104–121), we want to assist small entities in understanding this proposed rule so that they can better evaluate its effects on them and participate in the rulemaking. If the rule would affect your small business, organization, or governmental jurisdiction and you have questions concerning its provisions or options for compliance, please contact LTJG Ian Hanna, Waterways Management, Sector Puget Sound, Coast Guard; telephone 206–217–6045, e-mail *SectorSeattleWWM@uscg.mil.* The Coast Guard will not retaliate against small entities that question or complain about this proposed rule or any policy or action of the Coast Guard.

Collection of Information

This proposed rule would call for no new collection of information under the Paperwork Reduction Act of 1995 (44 U.S.C. 3501–3520).

Federalism

A rule has implications for federalism under Executive Order 13132, Federalism, if it has a substantial direct effect on State or local governments and would either preempt State law or impose a substantial direct cost of compliance on them. We have analyzed this proposed rule under that Order and have determined that it does not have implications for federalism.

Unfunded Mandates Reform Act

The Unfunded Mandates Reform Act of 1995 (2 U.S.C. 1531–1538) requires Federal agencies to assess the effects of their discretionary regulatory actions. In particular, the Act addresses actions that may result in the expenditure by a State, local, or tribal government, in the aggregate, or by the private sector of $100,000,000 (adjusted for inflation) or more in any one year. Though this proposed rule would not result in such an expenditure, we do discuss the effects of this rule elsewhere in this preamble.

Taking of Private Property

This proposed rule would not cause a taking of private property or otherwise have taking implications under Executive Order 12630, Governmental Actions and Interference with Constitutionally Protected Property Rights.

Civil Justice Reform

This proposed rule meets applicable standards in sections 3(a) and 3(b)(2) of Executive Order 12988, Civil Justice Reform, to minimize litigation, eliminate ambiguity, and reduce burden.

Protection of Children

We have analyzed this proposed rule under Executive Order 13045, Protection of Children from Environmental Health Risks and Safety Risks. This rule is not an economically significant rule and would not create an environmental risk to health or risk to safety that might disproportionately affect children.

Indian Tribal Governments

In preparation for this rulemaking, on October 8, 2010, Sector Puget Sound conducted a tribal consultation with representatives from the Suquamish and Muckleshoot tribes in accordance with Executive Order 13175, Consultation and Coordination with Indian Tribal Governments. The group noted that the sediment caps were in the usual and accustomed (U&A) fishing grounds of both tribes. Their main concern was that this RNA would prohibit them from exercising their U&A fishing. The Coast Guard and EPA clarified that nothing in this rulemaking is intended to conflict with these tribes' treaty fishing rights and they are not restricted from any type of fishing in the described areas. As a result of the consultation the Coast Guard added paragraph b.(3) to the regulation.

Energy Effects

We have analyzed this proposed rule under Executive Order 13211, Actions Concerning Regulations That Significantly Affect Energy Supply, Distribution, or Use. We have determined that it is not a ''significant energy action'' under that order because it is not a ''significant regulatory action'' under Executive Order 12866 and is not likely to have a significant adverse effect on the supply, distribution, or use of energy. The Administrator of the Office of Information and Regulatory Affairs has not designated it as a significant

energy action. Therefore, it does not require a Statement of Energy Effects under Executive Order 13211.

Technical Standards

The National Technology Transfer and Advancement Act (NTTAA) (15 U.S.C. 272 note) directs agencies to use voluntary consensus standards in their regulatory activities unless the agency provides Congress, through the Office of Management and Budget, with an explanation of why using these standards would be inconsistent with applicable law or otherwise impractical. Voluntary consensus standards are technical standards (e.g., specifications of materials, performance, design, or operation; test methods; sampling procedures; and related management systems practices) that are developed or adopted by voluntary consensus standards bodies.

This proposed rule does not use technical standards. Therefore, we did not consider the use of voluntary consensus standards.

Environment

We have analyzed this proposed rule under Department of Homeland Security Management Directive 023–01 and Commandant Instruction M16475.lD, which guide the Coast Guard in complying with the National Environmental Policy Act of 1969 (NEPA) (42 U.S.C. 4321–4370f), and have made a preliminary determination that this action is one of a category of actions that do not individually or cumulatively have a significant effect on the human environment. A preliminary environmental analysis checklist supporting this determination is available in the docket where indicated under **ADDRESSES**.

This proposed rule involves no factors in this case that would limit the use of a categorical exclusion under section 2.B.2 of the Instruction. Therefore, we believe that this rule should be categorically excluded, under figure 2–1, paragraph (34)(g), of the Instruction, from further environmental documentation. As a proposal to establish a regulated navigation area, this rule meets the criteria outlined in paragraph (34)(g). We seek any comments or information that may lead to the discovery of a significant environmental impact from this proposed rule.

List of Subjects in 33 CFR Part 165

Harbors, Marine safety, Navigation (water), Reporting and recordkeeping requirements, Security measures, Waterways.

For the reasons discussed in the preamble, the Coast Guard proposes to amend 33 CFR part 165 as follows:

PART 165—REGULATED NAVIGATION AREAS AND LIMITED ACCESS AREAS

1. The authority citation for part 165 continues to read as follows:

Authority: 33 U.S.C. 1231; 46 U.S.C. Chapter 701, 3306, 3703; 50 U.S.C. 191, 195; 33 CFR 1.05–1, 6.04–1, 6.04–6, and 160.5; Pub. L. 107–295, 116 Stat. 2064; Department of Homeland Security Delegation No. 0170.1.

2. Add § 165.1336 to read as follows:

§ 165.1336 Regulated Navigation Area; Pacific Sound Resources and Lockheed Shipyard Superfund Sites, Elliott Bay, Seattle, WA.

(a) *Regulated Areas.* The following areas are regulated navigation areas:

(1) All waters inside an area beginning at a point on the shore at 47°35′02.7″ N 122°22′23.00″ W; thence north to 47°35′26.00″ N 122°22′23.00″ W; thence east to 47°35′26.00″ N 122°21′52.50″ W; thence south to 47°35′10.80″ N 122°21′52.50″ W; thence southwest to a point on the shoreline at 47°35′05.9″ N 122°21′58.00″ W. [Datum: NAD 1983].

(2) All waters inside an area beginning at 47°34′52.16″ N 122°21′27.11″ W; thence to 47°34′53.46″ N 122°21′30.42″ W; thence to 47°34′37.92″ N 122°21′30.51″ W; thence to 47°34′37.92″ N 122°21′27.65″ W. [Datum: NAD 1983].

(b) *Regulations.*

(1) All vessels and persons are prohibited from activities that would disturb the seabed, such as anchoring, dragging, trawling, spudding, or other activities that involve disrupting the integrity of the sediment caps installed in the designated regulated navigation area, pursuant to the remediation efforts of the U.S. Environmental Protection Agency (EPA) and others in the Pacific Sound Resources and Lockheed Shipyard EPA superfund sites. Vessels may otherwise transit or navigate within this area without reservation.

(2) The prohibition described in paragraph (b)(1) of this section does not apply to vessels or persons engaged in activities associated with remediation efforts in the superfund sites, provided that the Captain of the Port, Puget Sound (COTP), is given advance notice of those activities by the EPA.

(3) Nothing in this rulemaking is intended to conflict with treaty fishing rights of the Muckleshoot and Suquamish tribes, and they are not restricted from any type of fishing in the described area.

(c) *Waivers.*

(1) Upon written request stating the need and proposed conditions of the waiver, and any proposed precautionary measures, the COTP may authorize a waiver from this section if they determine that the activity for which the waiver is sought can take place without undue risk to the remediation efforts described in paragraph (b)(1) of this section. The COTP will consult with EPA in making this determination when necessary and practicable.

Dated: July 6, 2011.

G.T. Blore,

Rear Admiral, U.S. Coast Guard, Commander, Thirteenth Coast Guard District.

[FR Doc. 2011–19320 Filed 7–29–11; 8:45 am]

BILLING CODE 9110–04–P

ENVIRONMENTAL PROTECTION AGENCY

40 CFR Part 52

[EPA–R03–OAR–2011–0471; FRL–9446–1]

Approval and Promulgation of Air Quality Implementation Plans; Pennsylvania; Diesel-Powered Motor Vehicle Idling Act

AGENCY: Environmental Protection Agency (EPA).

ACTION: Proposed rule.

SUMMARY: EPA proposes to approve the State Implementation Plan (SIP) revision submitted by the Commonwealth of Pennsylvania for the purpose of incorporating the Commonwealth's Diesel-Powered Motor Vehicle Idling Act (Act 124 of 2008, or simply Act 124) into the Pennsylvania SIP. Act 124, passed by the Pennsylvania General Assembly and signed into state law by Governor Rendell in October 2008 (and effective at the state level in February 2009), reduces the allowable time that heavy-duty, commercial highway diesel vehicles of over 10,000 pounds gross vehicle weight can idle their main propulsion engines. The law restricts idling of these commercial diesel vehicles (mostly heavy trucks and buses) to a period of 5 minutes per continuous 60 minute period (with certain allowable exemptions and exclusions). Act 124 applies statewide in the Commonwealth, and is estimated by Pennsylvania to significantly reduce emissions of nitrogen oxides (NO_X), volatile organic compounds (VOCs), and fine particulate matter (PM). While idle time emissions limits are not mandatory under the Clean Air Act (CAA), incorporation of Act 124 into the SIP does strengthen the SIP, makes the state

law federally enforceable by EPA, and allows the Commonwealth to take credit for emissions benefits from the rule as part of future Pennsylvania SIP revisions to demonstrate compliance with CAA National Ambient Air Quality Standards (NAAQS). This action is being taken under the CAA.

In the Final Rules section of this **Federal Register**, EPA is approving the Commonwealth's SIP submittal as a direct final rule without prior proposal because EPA views this as a noncontroversial submittal and anticipates no adverse comments. A detailed rationale for the approval is set forth in the direct final rule. If no adverse comments are received in response to this action, no further activity is contemplated. If EPA receives adverse comments, the direct final rule will be withdrawn and all public comments received will be addressed in a subsequent final rule based on this proposed rule. EPA will not institute a second comment period. Any parties interested in commenting on this action should do so at this time.

DATES: Comments must be received in writing by August 31, 2011.

ADDRESSES: Submit your comments, identified by Docket ID Number EPA–R03–OAR–2011–0471 by one of the following methods:

A. *http://www.regulations.gov.* Follow the on-line instructions for submitting comments.

B. *E-mail: fernandez.cristina@epa.gov*

C. *Mail:* EPA–R03–OAR–2011–0471, Cristina Fernandez, Associate Director, Office of Air Program Planning, Mailcode 3AP30, U.S. Environmental Protection Agency, Region III, 1650 Arch Street, Philadelphia, Pennsylvania 19103.

D. *Hand Delivery:* At the previously-listed EPA Region III address. Such deliveries are only accepted during the Docket's normal hours of operation, and special arrangements should be made for deliveries of boxed information.

Instructions: Direct your comments to Docket ID No. EPA–R03–OAR–2011–0471. EPA's policy is that all comments received will be included in the public docket without change, and may be made available online at *http://www.regulations.gov,* including any personal information provided, unless the comment includes information claimed to be Confidential Business Information (CBI) or other information whose disclosure is restricted by statute. Do not submit information that you consider to be CBI or otherwise protected through *http://www.regulations.gov* or e-mail. The *http://www.regulations.gov* Web site is an ''anonymous access'' system, which means EPA will not know your identity or contact information unless you provide it in the body of your comment. If you send an e-mail comment directly to EPA without going through *http://www.regulations.gov,* your e-mail address will be automatically captured and included as part of the comment that is placed in the public docket and made available on the Internet. If you submit an electronic comment, EPA recommends that you include your name and other contact information in the body of your comment and with any disk or CD–ROM you submit. If EPA cannot read your comment due to technical difficulties and cannot contact you for clarification, EPA may not be able to consider your comment. Electronic files should avoid the use of special characters, any form of encryption, and be free of any defects or viruses.

Docket: All documents in the electronic docket are listed in the *http://www.regulations.gov* index. Although listed in the index, some information is not publicly available, i.e., CBI or other information whose disclosure is restricted by statute. Certain other material, such as copyrighted material, is not placed on the Internet and will be publicly available only in hard copy form.

Publicly available docket materials are available either electronically in *http://www.regulations.gov* or in hard copy during normal business hours at the Air Protection Division, U.S. Environmental Protection Agency, Region III, 1650 Arch Street, Philadelphia, Pennsylvania 19103. Copies of the State submittal are available at the Pennsylvania Department of Environmental Protection, Bureau of Air Quality Control, P.O. Box 8468, 400 Market Street, Harrisburg, Pennsylvania 17105.

FOR FURTHER INFORMATION CONTACT: Brian Rehn, (215) 814–2176, or by e-mail at *rehn.brian@epa.gov.*

SUPPLEMENTARY INFORMATION: For further information, please see the information provided in the direct final action, with the same title, that is located in the ''Rules and Regulations'' section of this **Federal Register** publication.

Dated: July 18, 2011.

W.C. Early,

Acting Regional Administrator, Region III.

[FR Doc. 2011–19275 Filed 7–29–11; 8:45 am]

BILLING CODE 6560–50–P

DEPARTMENT OF COMMERCE

National Oceanic and Atmospheric Administration

50 CFR Part 648

[Docket No. 0808041037–81092–02]

RIN 0648–AX05

Fisheries of the Northeastern United States; Atlantic Mackerel, Squid, and Butterfish Fisheries; Amendment 11

AGENCY: National Marine Fisheries Service (NMFS), National Oceanic and Atmospheric Administration (NOAA), Commerce.

ACTION: Proposed rule, request for comments.

SUMMARY: NMFS proposes regulations to implement measures in Amendment 11 to the Atlantic Mackerel, Squid, and Butterfish (MSB) Fishery Management Plan (FMP). Amendment 11 was developed by the Mid-Atlantic Fishery Management Council (Council) to establish a tiered limited access program for the Atlantic mackerel (mackerel) fishery, and to make other changes to the management of the MSB fisheries. The Amendment 11 management measures include: A limited access program for mackerel; an open access incidental catch permit for mackerel; an update to essential fish habitat (EFH) designations for all life stages of mackerel, *Loligo* squid, *Illex* squid, and butterfish; and the establishment of a recreational allocation for mackerel. This rule also proposes minor, technical corrections to the existing regulations pertaining to the MSB fisheries.

DATES: Public comments must be received no later than 5 p.m., eastern standard time, on September 15, 2011.

ADDRESSES: Copies of supporting documents used by the Mid-Atlantic Fishery Management Council (Council), including the Environmental Assessment (EA) and Regulatory Impact Review (RIR)/Initial Regulatory Flexibility Analysis (IRFA), are available from: Dr. Christopher M. Moore, Executive Director, Mid-Atlantic Fishery Management Council, Room 2115, Federal Building, 300 South New Street, Dover, DE 19904–6790. The EA/RIR/IRFA is accessible via the Internet at *http://www.nero.noaa.gov.*

You may submit comments, identified by 0648–AX05, by any one of the following methods:

• *Electronic Submissions:* Submit all electronic public comments via the Federal e-Rulemaking Portal *http://www.regulations.gov;*

• *Fax:* (978) 281–9135, Attn: Aja Szumylo;

• Mail to NMFS, Northeast Regional Office, 55 Great Republic Dr., Gloucester, MA 01930. Mark the outside of the envelope ''Comments on MSB Amendment 11.''

Instructions: All comments received are a part of the public record and will generally be posted to *http://www.regulations.gov* without change. All Personal Identifying Information (for example, name, address, etc.) voluntarily submitted by the commenter may be publicly accessible. Do not submit Confidential Business Information or otherwise sensitive or protected information.

NMFS will accept anonymous comments (enter N/A in the required fields, if you wish to remain anonymous). You may submit attachments to electronic comments in Microsoft Word, Excel, WordPerfect, or Adobe PDF file formats only.

Written comments regarding the burden-hour estimates or other aspects of the collection-of-information requirements contained in this proposed rule may be submitted to NMFS, Northeast Regional Office and by e-mail to *OIRA_Submission@omb.eop.gov,* or fax to 202–395–7285.

FOR FURTHER INFORMATION CONTACT: Aja Szumylo, Fishery Policy Analyst, 978–281–9195, fax 978–281–9135.

SUPPLEMENTARY INFORMATION:

Background

The Council has considered a limited access program for the mackerel fishery on multiple occasions since 1992, with the most recent control date set as July 5, 2002 (67 FR 44792, later reaffirmed on June 9, 2005, 70 FR 33728). The Council initially notified the public of its intent to consider the impacts of alternatives for limiting access to the mackerel fishery in a Notice of Intent to Prepare a Supplemental Environmental Impact Statement (SEIS) for Amendment 9 to the MSB FMP (Amendment 9) on March 4, 2005 (70 FR 10605). The Council subsequently conducted scoping meetings in March 2005 on the development of a limited access program through Amendment 9. However, due to unforeseen delays in the development of Amendment 9, the Council notified the public on December 19, 2005 (70 FR 75114), that the mackerel limited access program would instead be analyzed in Amendment 11. The Council notified the public on February 27, 2007 (75 FR 8693), that it would begin the development of Amendment 11 in an SEIS, and finally notified the public on August 11, 2008 (73 FR 46590), that it would be necessary to prepare a full environmental impact statement (EIS) for Amendment 11. During further development of Amendment 11, the Council determined that the additional issues, namely updates to EFH designations and recreational allocations for the mackerel fishery, would also be considered.

The Council conducted public hearings in February 2010 and was originally scheduled to take final action on Amendment 11 in April of 2010, but decided to revise certain alternatives after reviewing public comment. The revisions were deemed to require a Supplement to the Draft Environmental Impact Statement (SDEIS) and an additional comment period through October 12, 2010.

This action proposes management measures that were recommended by the Council in Amendment 11. If implemented, these management measures would:

• Implement a three-tiered limited access system, with vessels grouped based on the following landings thresholds, with all qualifiers required to have possessed a valid permit on March 21, 2007. A vessel must have landed at least 400,000 lb (181.44 mt) in any one year 1997–2005 to qualify for a Tier 1 permit; at least 100,000 lb (45.36 mt) in any one year March 1, 1994—December 31, 2005, to qualify for a Tier 2 permit; or at least 1,000 lb (0.45 mt) in any one year March 1, 1994—December 31, 2005, to qualify for a Tier 3 permit, with Tier 3 allocated up to 7 percent of the commercial quota, through the specifications process;

• Establish an open access permit for all other vessels;

• Establish trip limits for all tiers annually through the specifications process, with possession limits initially set as unlimited for Tier 1; 135,000 lb (61.23 mt) for Tier 2; 100,000 lb (45.36 mt) for Tier 3; and 20,000 lb (9.07 mt) for open access;

• Establish permit application, permit appeal, vessel baseline, and vessel upgrade, replacement, and confirmation of permit history provisions similar to established for other Northeast region limited access fisheries;

• Establish a 10-percent maximum volumetric fish hold upgrade for Tier 1 and Tier 2 vessels;

• Allow vessel owners to retain mackerel fishing history in a purchase and sale agreement and use the history to qualify a different vessel for a mackerel permit (permit splitting);

• Require Tier 3 vessels to submit VTRs on a weekly basis;

• Designate as EFH the area associated with 90 percent of survey catch for each life stage of non-overfished species and the area associated with 95 percent of survey catch for each life stage of overfished or status unknown species (i.e., butterfish, mackerel, *Loligo* squid, and *Illex* squid); and

• Establish an annual recreational mackerel allocation equaling 6.2 percent of the mackerel allowable biological catch.

The Council took final action on October 13, 2010, and submitted Amendment 11 for NMFS review on May 12, 2011. A Notice of Availability (NOA) for Amendment 11, as submitted by the Council for review by the Secretary of Commerce, was published in the **Federal Register** on July 6, 2011 (76 FR 39374). The comment period on Amendment 11 ends on September 6, 2011. In addition to the implementing measures proposed in this rule, Amendment 11 contains changes in the EFH designations for MSB species that are not reflected in the regulations.

Proposed Measures

The proposed regulations are based on the measures in Amendment 11. NMFS has noted several instances where it has interpreted the language in Amendment 11 to account for any missing details in the Council's description of the proposed measures. In addition, some of the proposed regulations in Amendment 11 are associated with the Council's Omnibus Annual Catch Limit and Accountability Measures (ACL/AM) Amendment, for a proposed rule which published on June 17, 2011 (76 FR 35578). Several sections of regulatory text are affected by both actions. The proposed regulations for both actions will present adjustments to the existing regulatory text. In the likely event that the Omnibus ACL/AM Amendment is finalized prior to Amendment 11, the finalized regulations for Amendment 11 will be presented as modifications to the regulations that will be implemented in the Omnibus ACL/AM Amendment, and will thus differ in structure, but not content, from the regulations presented in this proposed rule. The adjustments will be similar to those in this proposed rule. NMFS seeks comments on all of the measures in Amendment 11.

1. Limited Access Mackerel Permits and Trip Limits

Amendment 11 would implement a three-tiered limited access permit system for the mackerel fishery. Vessels that do not qualify for a limited access mackerel permit would still be able to

receive the open access mackerel permit described below. The initial trip limits proposed for each permit category below would be adjustable through the specifications process.

In order to be eligible for a limited access mackerel permit, applicants would have to meet both a permit history requirement and a landings requirement. The permit history requirement and landings requirement must be derived from the same vessel (i.e., it is not possible to combine the permit criteria from Vessel A with the landings criteria from Vessel B to create a mackerel eligibility).

To qualify for a Tier 1 Limited Access Mackerel permit, a vessel must have been issued a Federal mackerel permit that was valid on March 21, 2007, and must have landed at least 400,000 lb (181.44 mt) of mackerel in any one year between January 1, 1997, and December 31, 2005, as verified by NMFS records or documented through dealer receipts submitted by the applicant. The Tier 1 Limited Access Mackerel permit would allow such vessels to possess and land unlimited amounts of mackerel.

To qualify for a Tier 2 Limited Access Mackerel permit, a vessel must have been issued a Federal mackerel permit that was valid on March 21, 2007, and must have landed at least 100,000 lb (45.36 mt) of mackerel in any one year between March 1, 1994, and December 31, 2005, as verified by NMFS records or documented through dealer receipts submitted by the applicant. The Tier 2 Limited Access Mackerel permit would allow such vessels to possess and land 135,000 lb (61.23 mt) of mackerel per trip.

To qualify for a Tier 3 Limited Access Mackerel permit, a vessel must have been issued a Federal mackerel permit that was valid on March 21, 2007, and must have landed at least 1,000 lb (0.45 mt) of mackerel in any one year between March 1, 1994, and December 31, 2005, as verified by NMFS records or documented through dealer receipts submitted by the applicant. The Tier 3 Limited Access Mackerel permit would allow such vessels to possess and land 100,000 lb (45.36 mt) of mackerel per trip.

The current regulations state that during a closure of the directed mackerel fishery that occurs prior to June 1, vessels issued a mackerel permit may not fish for, possess, or land more than 20,000 lb (9.08 mt) of mackerel per trip, and that during any closure that occurs after June 1, vessels may not fish for, possess, or land more than 50,000 lb (22.7 mt) of mackerel per trip. This provision would be maintained for limited access mackerel permit holders.

2. Limited Access Vessel Permit Provisions

Amendment 11 would establish measures to govern future transactions related to limited access vessels, such as purchases, sales, or reconstruction. These measures would apply to all limited access mackerel vessels. Except as noted, the provisions proposed in this amendment are consistent with those that govern most of the other Northeast region limited access fisheries; there are some differences in the limited access program for American lobster.

Initial Eligibility and Application

Initial eligibility for a mackerel limited access permit would have to be established during the first year after the implementation of Amendment 11. A vessel owner would required to submit an application for a mackerel limited access permit within 12 months of the effective date of the final regulations. In order to expedite the transition to the limited access mackerel program, NMFS would require applicants wishing to fish for mackerel with a limited access permit after January 1, 2012, to submit an application at least 30 days prior to the start of the 2012 fishing year (November 30, 2011). After January 1, 2012, current mackerel permit holders who have not yet submitted an application for a limited access mackerel permit, and individuals who have submitted incomplete or unsuccessful applications for a limited access mackerel permit, would automatically be re-designated as open access permit holders under the new mackerel permit system, and would be subject to the open access possession limit described in this proposed rule. All applicants would have until December 31, 2012, to submit an initial application.

Initial Confirmation of Permit History (CPH) Application

A person who does not currently own a fishing vessel, but who has owned a qualifying vessel that has sunk, been destroyed, or transferred to another person, and the applicant has lawfully retained the valid mackerel permit and fishing history, would be required to apply for and receive a CPH. To be eligible to obtain a CPH, the applicant would have to show that the qualifying vessel meets the eligibility requirements for the limited access mackerel permit in question, and that all other permit restrictions described below are satisfied. If the vessel sank, was destroyed, or was transferred before March 21, 2007, the permit issuance criteria may be satisfied if the vessel was issued a valid Federal mackerel permit at any time between March 21, 2006, and March 21, 2007.

Issuance of a valid CPH would preserve the eligibility of the applicant to apply for a limited access permit for a replacement vessel based on the qualifying vessel's fishing and permit history at a subsequent time. A CPH would have to be applied for in order for the applicant to preserve the limited access eligibility of the qualifying vessel. Vessel owners who were issued a CPH could obtain a vessel permit for a replacement vessel, consistent with the vessel size upgrade restrictions, based upon the vessel length, tonnage, and horsepower of the vessel on which the CPH issuance is based.

The Amendment 11 document is unclear regarding application deadline for vessels applying to receive a CPH during the application period. The document states that applications for CPH would have to be submitted no later than 30 days prior to the end of the first full permit year in which a vessel permit cannot be issued. This would mean that, if the limited access program is effective on January 1, 2012, applicants applying directly into CPH would only have until March 31, 2012 (30 days before the end of the permit year) to apply for a CPH, while applicants applying for an active mackerel permit would have until December 31, 2012, to apply. NMFS clarifies that applicants wishing to place their limited access mackerel permit directly into CPH will be given the same initial application deadline as applicants applying for an active limited access mackerel permit, namely from January 1, 2012, to December 31, 2012.

Landings History

NMFS will use dealer data in NMFS's database to determine eligibility. If NMFS data do not demonstrate that a vessel made landings of mackerel that satisfy the eligibility criteria for a limited access permit, applicants would have to submit dealer receipts that verify landings, or use other sources of information (e.g., joint venture receipts) to demonstrate that there is incorrect or missing information in the Federal dealer records via the appeals process described below.

Amendment 11 does not specify a method for dividing qualifying landings between vessels that fished cooperatively for mackerel in pair trawl operations that wish to each use a subset of shared landings history to qualify individual vessels. NMFS proposes that owners of pair trawl vessels may divide the catch history

between the two vessels in the pair through third party verification and supplemental information, such as previously submitted VTRs, or dealer reporting. The two owners must apply for a limited access mackerel permit jointly and must submit proof that they have agreed to the division of landings. This approach was used to qualify pair trawl vessels in Amendment 1 to the Atlantic Herring FMP.

Permit Transfers

An Atlantic mackerel limited access permit and fishing history would be presumed to transfer with a vessel at the time it is bought, sold, or otherwise transferred from one owner to another, unless it is retained through a written agreement signed by both parties in the vessel sale or transfer.

Multiple Vessels With One Owner

The Council proposed a provision specific to multiple vessel ownership, qualification, and replacement. The provision states that, if an individual owns more than one vessel, but only one of those vessels has the permit and landings history required to be eligible for a limited access mackerel permit, the individual can replace the vessel that it determined to be eligible with one of his/her other vessels, provided that the replacement vessel complies with the upgrade restrictions detailed below. The proposed rule does not contain a regulation specific to the Council's proposed measure. Rather, the individual regulations pertaining to qualification, baselines, upgrades, and vessel replacements separately address the Council's proposed measure.

This provision would not exempt owners of multiple vessels from the permit splitting provision, described below. For example, if a vessel owner has a limited access multispecies permit on the same vessel that created the mackerel eligibility, the entire suite of permits would need to be replaced onto the owner's other vessel in order to move the mackerel eligibility. In addition, if an individual owns two vessels, a 50-ft (15.2 m) vessel with a mackerel eligibility, and a 65-ft (19.8 m) vessel, he would not be able to move the mackerel eligibility onto the larger vessel, because it is outside of the vessel upgrade restrictions.

Permit Splitting

Amendment 11 adopts the permit splitting provision currently in effect for other limited access fisheries in the region. Therefore, a limited access mackerel permit may not be issued to a vessel if the vessel's permit history was used to qualify another vessel for any other limited access permit. This means all limited access permits, including limited access mackerel permits, must be transferred as a package when a vessel is replaced or sold.

However, Amendment 11 explicitly states that the permit-splitting provision would not apply to the retention of an open access mackerel permit and fishing history that occurred prior to April 3, 2009, if any limited access permits were issued to the subject vessel. Thus, vessel owners who sold a vessel with limited access permits and retained the open access mackerel permit and landings history prior to April 3, 2009, with the intention of qualifying a different vessel for a limited access mackerel permit, would be allowed to do so under Amendment 11. This differs from the current permit splitting provisions of other limited access fishery regulations, specifically the Atlantic herring limited access permit splitting provision implemented under Amendment 1 to the Atlantic Herring FMP. It is consistent with permit splitting provisions implemented for the scallop limited access general category permit program.

Qualification Restriction

Consistent with previous limited access programs, no more than one vessel would be able to qualify, at any one time, for a limited access permit or CPH based on that or another vessel's fishing and permit history, unless more than one owner has independently established fishing and permit history on the vessel during the qualification period and has either retained the fishing and permit history, as specified above, or owns the vessel at the time of initial application under Amendment 11. If more than one vessel owner claimed eligibility for a limited access permit or CPH, based on a vessel's single fishing and permit history, the NMFS Regional Administrator would determine who is entitled to qualify for the permit or CPH based on information submitted and in compliance with the applicable permit provisions.

Appeal of Permit Denial

Amendment 11 specifies an appeals process for applicants who have been denied a limited access Atlantic mackerel permit. Applicants would have two opportunities to appeal the denial of a limited access mackerel permit. The review of initial application denial appeals would be conducted under the authority of the Regional Administrator at NMFS's Northeast Regional Office. The review of second denial appeals would be conducted by a hearing officer appointed by the Regional Administrator, or through a National Appeals program, which is under development by NMFS and may be utilized for mackerel appeals.

An appeal of the denial of an initial permit application (first level of appeal) must be made in writing to the NMFS Northeast Regional Administrator. Under this amendment, appeals would be based on the grounds that the information used by the Regional Administrator in denying the permit was incorrect. The only items subject to appeal under this limited access program would be the accuracy of the amount of landings, and the correct assignment of landings to a vessel and/or permit holder. Amendment 11 would require appeals to be submitted to the Regional Administrator, postmarked no later than 30 days after the denial of an initial limited access mackerel permit application. The appeal must be in writing, must state the specific grounds for the appeal, the limited access mackerel permit category for which the applicant believes he should qualify, and information to support the appeal. The appeal shall set forth the basis for the applicant's belief that the Regional Administrator's decision was made in error. The appeal would not be reviewed without submission of information in support of the appeal. The Regional Administrator would appoint a designee to make the initial decision on the appeal.

Should the appeal be denied, the applicant would be allowed to request a review of the Regional Administrator's appeal decision (second level of appeal). Such a request must be in writing postmarked no later than 30 days after the appeal decision, must state the specific grounds for the appeal, and must include information to support the appeal. A hearing would not be conducted without submission of information in support of the appeal. If the request for review of the appeal decision is not made within 30 days, the appeal decision is the final administrative action of the Department of Commerce. If the National Appeals process is not fully established, the Regional Administrator will appoint a hearing officer. The hearing officer would make findings and a recommendation to the Regional Administrator, which would be advisory only. The Regional Administrator's decision is the final administrative action of the Department of Commerce.

The owner of a vessel denied a limited access mackerel permit could fish for mackerel, provided that the denial has been appealed, the appeal was pending, and the vessel had on

board a letter from the Regional Administrator authorizing the vessel to fish under the limited access category for which the applicant has submitted the appeal. The Regional Administrator would issue such a letter for the pendency of any appeal. If the appeal is ultimately denied, the Regional Administrator would send a notice of final denial to the vessel owner; and the authorizing letter would become invalid 5 days after the receipt of the notice of denial.

Establishing Vessel Baselines

A vessel's baseline refers to those specifications (length overall, gross registered tonnage (GRT), net tonnage (NT), and horsepower (HP)) from which any future vessel size change is measured. The vessel baseline specifications for vessels issued a limited access mackerel permits would be the specifications of the vessel that was initially issued the limited access permit as of the date that the vessel qualifies for such a permit. If a vessel owner is initially issued a CPH instead of a mackerel permit, the attributes of the vessel that is the basis of the CPH would establish the size baseline against which future vessel limitations would be evaluated. If the vessel that established the CPH is less than 20 ft (6.09 m) in length, then the baseline specifications associated with other limited access permits in the CPH suite will be used to establish the mackerel baseline specifications. If the vessel that established the CPH is less than 20 ft (6.09 m) in length, the limited access mackerel eligibility was established on another vessel, and there are no other limited access permits in the CPH suite, then the applicant must submit valid documentation of the baseline specifications of the vessel that established the eligibility. If a vessel owner applying for a CPH has a contract to purchase a vessel to replace the vessel for which CPH was issued prior to the submission of the mackerel limited access permit application (for the CPH), then the contracted vessel would form the baseline specifications for that vessel, provided an initial application for the contract vessel to replace the vessel for which the CPH was issued is received by December 31, 2012 (1 full year after the end of the proposed initial application period).

Vessel Upgrades

A vessel could be upgraded in size, whether through retrofitting or replacement, and be eligible to retain or renew a limited access permit, only if the upgrade complies with the limitations in Amendment 11. The vessel's HP could be increased only once, whether through refitting or vessel replacement. Such an increase could not exceed 20 percent of the vessel's baseline specifications. The vessel's length, GRT, and NT could be increased only once, whether through refitting or vessel replacement. Any increase in any of these three specifications of vessel size could not exceed 10 percent of the vessel's baseline specifications. If any of these three specifications is increased, any increase in the other two must be performed at the same time. This type of upgrade could be done separately from an engine HP upgrade. Amendment 11 maintains the existing specification of maximum length, size and HP for vessels engaged in the Atlantic mackerel fishery (165 ft (50.02 m), 75 GRT (680.3 mt), and 3,000 HP). Tier 1 and Tier 2 vessels must also comply with the upgrade restrictions relevant to the vessel hold volume certification described below.

Vessel Hold Capacity Certification

In addition to the standard baseline specifications, Tier 1 and Tier 2 vessels would be required to obtain a fish hold capacity measurement from a certified marine surveyor. The hold capacity measurement submitted at the time of application for a Tier 1 or Tier 2 limited access mackerel permit would serve as an additional permit baseline for these permit categories. The hold volume for at Tier 1 or Tier 2 permit could only be increased once, whether through refitting or vessel replacement. Any increase could not exceed 10 percent of the vessel's baseline hold measurement. This type of upgrade could be done separately from the size and HP upgrades.

Amendment 11 does not specify how a hold capacity baseline should be established for vessels whose permits go directly into CPH. In cases where the qualifying vessel has sunk or been destroyed, it will not be feasible for the applicant to obtain a hold capacity certification. NMFS proposes that the hold capacity baseline for such vessels will be the hold capacity of the first replacement vessel after the permits are removed from CPH.

Vessel Replacements

The term ''vessel replacement,'' in general, refers to replacing an existing limited access vessel with another vessel. In addition to addressing increases in vessel size, hold capacity, and HP, Amendment 11 would establish a restriction that requires that the same entity must own both the limited access vessel (permit and fishing history) that is being replaced, and the replacement vessel.

Voluntary Relinquishment of Eligibility

Amendment 11 includes a provision to allow a vessel owner to voluntarily exit a limited access fishery. Such relinquishment would be permanent. In some circumstances, it could allow vessel owners to choose between different permits with different restrictions without being bound by the more restrictive requirement (e.g., lobster permits holders may choose to relinquish their other Northeast Region limited access permits to avoid being subject to the reporting requirements associated with those other permits). If a vessel's limited access permit history for the mackerel fishery is voluntarily relinquished to the Regional Administrator, no limited access permit for that fishery may be reissued or renewed based on that vessel's history.

Permit Renewals and CPH Issuance

Amendment 11 specifies that a vessel owner must maintain the limited access permit status for an eligible vessel by renewing the permits on an annual basis or applying for the issuance of a CPH. A CPH is issued to a person who does not currently own a particular fishing vessel, but who has legally retained the fishing and permit history of the vessel for the purposes of transferring it to a replacement vessel at a future date. The CPH provides a benefit to a vessel owner by securing limited access eligibility through a registration system when the individual does not currently own a vessel.

A vessel's limited access permit history would be cancelled due to the failure to renew, in which case, no limited access permit could ever be reissued or renewed based on the vessel's history or to any other vessel relying on that vessel's history. All limited access permits must be issued on an annual basis by the last day of the fishing year for which the permit is required, unless a CPH has been issued. A complete application for such permits must be received no later than 30 days before the last day of the permit year.

3. Tier 3 Allocation and Additional Reporting Requirements

Amendment 11 proposes an allocation for participants in the limited access mackerel fishery that hold a Tier 3 permit. Tier 3 would be allocated a maximum catch of up to 7 percent of the commercial mackerel quota (the remainder of the commercial mackerel quota would be available to Tier 1 or Tier 2 vessels). The Tier 3 allocation would be set annually during the

specifications process. NMFS presumes that, during a closure of the Tier 3 mackerel fishery that occurs prior to June 1, vessels issued a mackerel permit may not fish for, possess, or land more than 20,000 lb (9.08 mt) of mackerel per trip, and that during a closure that occurs after June 1, vessels may not fish for, possess, or land more than 50,000 lb (22.7 mt) of mackerel per trip. In order to monitor Tier 3 landings, Amendment 11 would require vessels that hold a Tier 3 limited access mackerel permit to submit vessel trip reports (VTRs) on a weekly basis.

4. Open Access Permit and Possession Limit

Any vessel could be issued an open access mackerel permit that would authorize the possession and landing of up to 20,000 lb (9.07 mt) of mackerel per trip. The open access possession limit would stay the same during a closure of the directed mackerel fishery.

5. Updates to EFH Definitions

Section 600.815(a)(9) of the final rule to revise the regulations implementing the EFH provisions of the Magnuson-Stevens Act requires a complete review of EFH information at least once every 5 years. With the exception of the establishment of *Loligo* egg EFH in Amendment 9 to the MSB FMP in 2008, the EFH information for MSB fisheries has not been updated since the original analysis and designations were done for Amendment 8 to the MSB FMP (Amendment 8) in 1998. Amendment 11 would revise the EFH text descriptions for all MSB species based on updated data from the Northeast Fishery Science Center (NEFSC) trawl survey, the Marine Resources Monitoring Assessment and Prediction Program (MARMAP), state bottom trawl surveys, NOAA's Estuarine Living Marine Resources (ELMR) program, and scientific literature on habitat requirements. Amendment 11 would designate as EFH the area associated with 90 percent of the cumulative geometric mean catches for non-overfished species, and the area associated with 95 percent of the cumulative geometric mean catches for unknown or overfished species. All MSB species currently fall in the latter category. Text descriptions and maps for the new proposed EFH designation can be found in Amendment 11.

6. Recreational Mackerel Allocation

Amendment 11 proposes an allocation to the recreational fishery in order to incorporate recreational mackerel ACLs/AMs into the framework for the Council's Omnibus ACL/AM Amendment. The recreational allocation would be set equal to 6.2 percent of the domestic mackerel allowable biological catch (ABC). This allocation corresponds to the proportion of total U.S. mackerel landings that was accounted for by the recreational fishery from 1997–2007 times 1.5. The Council would be able to take action via specifications, a framework adjustment, or amendment to adjust any disconnect between the recreational allocation and future recreational harvests.

Classification

Pursuant to section 304(b)(1)(A) of the Magnuson-Stevens Act, the NMFS Assistant Administrator has determined that this proposed rule is consistent with the MSB FMP, other provisions of the Magnuson-Stevens Act, and other applicable law, subject to further consideration after public comment.

This proposed rule has been determined to be not significant for purposes of Executive Order 12866.

This proposed rule contains collection-of-information requirements subject to review and approval by the Office of Management and Budget (OMB) under the Paperwork Reduction Act (PRA). Several of these requirements have been submitted to OMB for approval under the MSB Amendment 10 Family of Forms (OMB Control No. 0648–0601). Under the proposed limited access program, vessel owners would be required to submit to NMFS application materials to demonstrate their eligibility for a limited access permit. The public burden for the application requirement pertaining to the limited access program is estimated to average 45 min per application, including the time for reviewing instructions, searching existing data sources, gathering and maintaining the data needed, and completing and reviewing the collection information.

Only 410 vessels are expected to qualify and consequently renew their limited access mackerel permits via the renewal application each year. The renewal application is estimated to take 30 min on average to complete. Up to 30 applicants are expected to appeal the denial of their permit application. The appeals process is estimated to take an average of 2 hr to complete. Vessels that qualify for a Tier 1 or Tier 2 mackerel permit would be required to submit documentation of hold volume size. The Council estimated that 74 vessels would qualify for either a Tier 1 or Tier 2 limited access mackerel permit. Tier 1 and 2 vessel owners will experience a time burden due to this requirement in the form of travel time to/from a certified marine surveyor. It is not possible to estimate a time burden associated with obtaining a hold volume measurement, as vessels would have to travel varying distances to visit certified marine surveyors. Travel time to a marine surveyor is not an information collection burden, so is not considered a response.

Completion of a replacement or upgrade application requires an estimated 3 hr per response. It is estimated that no more than 40 of 410 vessels possessing these permits will request a vessel replacement or upgrade annually. Completion of a CPH application requires an estimated 30 min per response. It is estimated that no more than 30 of the 410 vessels possessing these limited access permits will request a CPH annually.

The proposed rule also modifies the VTR requirement for Tier 3 mackerel vessel. All mackerel vessels are currently required to submit VTRs on a monthly basis; this requirement is currently approved under the Northeast Region Logbook Family of Forms (OMB Control No. 0648–0212). This proposed rule would require vessels issued a Tier 3 mackerel permit to submit VTRs on a weekly basis. A change request for this requirement has been submitted to OMB for approval. The public burden for the revised VTR requirement is expected to average 5 min for each additional VTR submission.

Public comment is sought regarding: Whether this proposed collection of information is necessary for the proper performance of the functions of the agency, including whether the information shall have practical utility; the accuracy of the burden estimate; ways to enhance the quality, utility, and clarity of the information to be collected; and ways to minimize the burden of the collection of information, including through the use of automated collection techniques or other forms of information technology. Send comments on these or any other aspects of the collection of information to the Regional Administrator (see **ADDRESSES**), and email to *OIRA_Submission@omb.eop.gov* or fax to 202–395–7285.

Notwithstanding any other provision of the law, no person is required to respond to, and no person shall be subject to penalty for failure to comply with, a collection of information subject to the requirements of the PRA, unless that collection of information displays a currently valid OMB Control Number.

The Council prepared an IRFA, as required by section 603 of the Regulatory Flexibility Act (RFA). The IRFA describes the economic impact this proposed rule, if adopted, would

have on small entities. A description of the action, why it is being considered, and the legal basis for this action are contained at the beginning of this section in the preamble and in the **SUMMARY**. A summary of the analysis follows. A copy of this analysis is available from the Council or NMFS (see **ADDRESSES**) or via the Internet at *http://www.nero.noaa.gov.*

Description and Estimate of Number of Small Entities to Which the Rule Will Apply

The proposed measures in Amendment 11 would primarily affect participants in the mackerel fishery. All of the potentially affected businesses are considered small entities under the standards described in NMFS guidelines, because they have gross receipts that do not exceed $4 million annually. There were 2,331 vessels issued open access mackerel permits in 2010. The Small Business Administration (SBA) size standard for commercial fishing (NAICS code 114111) is $4 million in sales. Available data indicate that no single fishing entity earned more than $4 million annually. Although there are likely to be entities that, based on rules of affiliation, would qualify as large business entities, due to lack of reliable ownership affiliation data NMFS cannot apply the business size standard at this time. Data are currently being compiled on vessel ownership that should permit a more refined assessment and determination of the number of large and small entities in the mackerel fishery for future actions. For this action, since available data are not adequate to identify affiliated vessels, each operating unit is considered a small entity for purposes of the RFA, and, therefore, there is no differential impact between small and large entities. Therefore, there are no disproportionate economic impacts on small entities. Section 6.5 in Amendment 11 describes the vessels, key ports, and revenue information for the mackerel fishery, therefore, that information is not repeated here.

Description of Projected Reporting, Recordkeeping, and Other Compliance Requirements Minimizing Significant Economic Impacts on Small Entities

There will be an estimated 820 applications for a limited access mackerel permit. With an average processing time of 45 min, the total time burden for this application is 615 hr. Only 410 vessels are expected to qualify and consequently renew their permit via the renewal application each year. The renewal application is estimated to take 30 min on average to process, for a burden of 205 hr. Up to 30 applicants are expected to appeal the denial of their permit application (other FMPs estimated between 5–7 percent of applications would move on to the appeal stage). The appeals process is estimated to take 2 hr to complete, on average, with a total burden of 60 hr. The 3-yr average total public cost burden for permit applications, appeals, and renewals is $261, which includes postage and copy fees for submissions.

Each hold volume measurement done by a certified marine surveyor is estimated to cost $4,000. An estimated 74 vessels would qualify for either a Tier 1 or Tier 2 limited access mackerel permit, and would be required to submit a hold volume measurement at the time of permit issuance. Roughly 40 vessels are expected to upgrade or replace vessels each year, and would be required to submit a hold volume measurement for the upgraded or replacement vessel. Therefore, annual average cost over a 3-yr period is estimated to be $258,667 ($98,667 for annualized initial hold volume certifications, plus $160,000 for replacement hold volume certifications), not including travel expenses.

New limited access mackerel vessels would be subject to the same replacement, upgrade, and permit history restrictions as other limited access vessels. Completion of a replacement or upgrade application requires an estimated 3 hr per response. It is estimated that no more than 40 of the 410 vessels possessing these limited access permits will request a vessel replacement or upgrade annually. This resultant burden would be up to 120 hr. Completion of a CPH application requires an estimated 30 min per response. It is estimated that owners of no more than 30 of the 410 vessels possessing a limited access mackerel permit will request a CPH annually. The resultant burden would be up to 15 hr. The total public cost burden for replacement, upgrade, and CPH applications is $140 for postage and copy fees.

An estimated 329 Tier 3 limited access mackerel vessels would be required to submit VTRs on a weekly basis. Completion of a VTR is estimated to take 5 min per submission. The resultant burden would be 1,151.5 hr. The total public cost burden for VTR submission is $5,790.40 for postage.

Economic Impacts of the Proposed Action Compared to Significant Non-Selected Alternatives

Tiered Limited Access Program

The FEIS estimates the numbers of vessel that would qualify for limited access permits under the different alternatives. In addition to the no action alternative and preferred alternative, six additional alternatives for tiered limited access programs, and two alternatives that would qualify participants in the Atlantic herring fishery for limited access mackerel permits. Information from the dealer weighout database was used to estimate how many vessels would qualify under each of the proposed limited access alternatives. The economic impacts of these alternatives on both individual vessels and the overall capacity of mackerel fleet is described in sections 5.1.4 and 7.5 of the FEIS and are summarized below.

The composition of the qualifying group that results under each of the tiered limited access programs described in this segment changes based on each alternative. In most instances, the quota allocation and trip limit alternatives described below are averages or percentages based on the composition of the qualifying group. Accordingly, the Tier allocation and trip limit alternative sets described below are different for each of the tiered limited access program alternatives.

Under the preferred alternative, 29 vessels would qualify for a Tier 1 permit, 45 vessels would qualify for a Tier 2 permit, and 329 vessels would qualify for a Tier 3 permit, resulting in a total of 403 vessels that would qualify for the various limited access mackerel permits. The preferred alternative would cap Tier 3 with a maximum allocation of up to 7 percent of the commercial mackerel quota, with no other additional allocations for any other Tiers. The economic impacts of the Tier allocations will be discussed separately from the structure of the limited access program.

The eligibility criteria for a Tier 1 permit in Alternative 1B would have required a vessel to possess a mackerel permit and have landed at least 1,000,000 lb (453.6 mt) in any one year between January 1, 1997, and December 31, 2007. To qualify for a Tier 2 permit, a vessel would have been required to possess a permit and have landed at least 100,000 lb (45.36 mt) between January 1, 1988, and December 31, 2007. To qualify for a Tier 3 permit, a vessel would have been required to possess a permit and have landed at least 25,000 lb (11.34 mt) between January 1, 1988,

and December 31, 2007. Under Alternative 1B, 26 vessels would qualify for a Tier 1 permit, 64 vessels would qualify for a Tier 2 permit, and 56 vessels would qualify for a Tier 3 permit, resulting in a total of 146 vessels that would qualify for the various limited access mackerel permits.

The eligibility criteria for a Tier 1 permit in Alternative 1C would have required a vessel to possess a mackerel permit and have landed at least 1,000,000 lb (453.6 mt) in any one year between January 1, 1997, and December 31, 2007. To qualify for a Tier 2 permit, a vessel would have been required to possess a permit and have landed at least 100,000 lb (45.36 mt) between January 1, 1997, and December 31, 2007. To qualify for a Tier 3 permit, a vessel would have been required to possess a permit and have landed at least 1,000 lb (.45 mt) between January 1, 1997, and December 31, 2007. As with the preferred alternative, 1C would have capped Tier 3 with a maximum allocation of up to 7 percent of the commercial mackerel quota, with no other additional allocations for any other Tiers. Under Alternative 1C, 26 vessels would qualify for a Tier 1 permit, 36 vessels would qualify for a Tier 2 permit, and 309 vessels would qualify for a Tier 3 permit, resulting in a total of 371 vessels that would qualify for the various limited access mackerel permits.

The eligibility criteria for a Tier 1 permit in Alternative 1E would have required a vessel to possess a mackerel permit and have landed at least 400,000 lb (181.44 mt) of mackerel in any one year between January 1, 1997, and December 31, 2005. To qualify for a Tier 2 permit, a vessel would have been required to possess a permit and have landed at least 100,000 lb (45.36 mt) of mackerel in any one year between January 1, 1997, and December 31, 2005. To qualify for a Tier 3 permit, a vessel would have been required to possess a permit and have landed at least 25,000 lb (11.34 mt) of mackerel in any one year between January 1, 1997, and December 31, 2007. Under Alternative 1E, 29 vessels would qualify for a Tier 1 permit, 25 vessels would qualify for a Tier 2 permit, and 50 vessels would qualify for a Tier 3 permit, resulting in a total of 104 vessels that would qualify for the various limited access mackerel permits.

The eligibility criteria for a Tier 1 permit in Alternative 1F would have required a vessel to possess a mackerel permit and have landed at least 1,000,000 lb (453.6 mt) in any one year between January 1, 1997, and December 31, 2007. To qualify for a Tier 2 permit, a vessel would have been required to possess a permit and have landed at least 100,000 lb (45.36 mt) between January 1, 1988, and December 31, 2007. To qualify for a Tier 3 permit, a vessel would have been required to possess a permit and have landed at least 10,000 lb (4.5 mt) between January 1, 1988, and December 31, 2007. Under Alternative 1F, 26 vessels would qualify for a Tier 1 permit, 64 vessels would qualify for a Tier 2 permit, and 121 vessels would qualify for a Tier 3 permit, resulting in a total of 211 vessels that would qualify for the various limited access mackerel permits.

Alternative 1G would implement a single-tiered limited access program for which 26 vessels would qualify. The eligibility criteria for a limited access permit would have required a vessel to possess a mackerel permit and have landed at least 1,000,000 lb (453.6 mt) in any one year between January 1, 1997, and December 31, 2007.

The eligibility criteria for a Tier 1 permit in Alternative 1J would have required a vessel to possess a mackerel permit and have landed at least 1,000,000 lb (453.6 mt) of mackerel in any one year between January 1, 1997, and December 31, 2007. To qualify for a Tier 2 permit, a vessel would have been required to possess a permit and have landed at least 100,000 lb (45.36 mt) of mackerel in any one year between March 1, 1994, and December 31, 2007. To qualify for a Tier 3 permit, a vessel would have been required to possess a permit and have landed at least 25,000 lb (11.34 mt) of mackerel in any one year between March 1, 1994, and December 31, 2007. Under Alternative 1J, 26 vessels would qualify for a Tier 1 permit, 55 vessels would qualify for a Tier 2 permit, and 49 vessels would qualify for a Tier 3 permit, resulting in a total of 130 vessels that would qualify for the various limited access mackerel permits.

The number of individual qualifiers resulting from these management alternatives primarily varies based on the start date and end date of the qualifying landings period, and the required landings threshold for each Tier. A comparison of Alternatives 1B and 1C illustrates the effects of different start dates on numbers of qualifiers. Alternative 1C, which has a 1997 start date, results in 42 fewer qualifying vessels (29 fewer vessels in Tier 2, 13 fewer in Tier 3) than Alternative 1B, which has a 1988 start date. While the later start dates result in fewer qualifiers in Tiers 2 and 3, the economic impacts on these individual vessels should not be significant when compared to their recent level of participation in the fishery. Vessels are still placed in a Tier based on their participation in the fishery since 1997, and analysis in Amendment 11 shows that lower Tiers generally derive a small percentage of their revenue (less than 2 percent for all alternatives) from mackerel.

Vessels that had sizable landings in 2006 or 2007 would be most impacted by the use of a 2005 qualifying landings period end date; this can be illustrated by comparing Alternative 1C (2007) and 1E (2005). With the 2007 end date in 1C, there would be 26 Tier 1 vessels and 35 Tier 2 vessels. If the end date is switched to 2005, as in 1E, three Tier 1 vessels and six Tier 2 vessels fall into lower Tiers. These vessels fell into lower Tiers because their best years of participation were more recent. Depending on the trip limits selected for the lower Tiers, these vessels may be negatively impacted by the earlier end date because they would be constrained compared to their recent participation in the mackerel fishery.

The FEIS presents an estimate of the maximum feasible annual capacity for the Tier 1 and Tier 2 vessels projected to qualify in each of proposed alternatives; this estimate indicates the maximum amount of mackerel the fleet could land under the various management alternatives in a single year. Only Tier 1 and Tier 2 were included in the analysis because, with the exception of Alternative 1G, the other tiers in the presented alternatives will be constrained by trip limits or tier allocations. The highest capacity estimates are associated with the no action alternative and Alternative 1G (202,111 mt). The capacity for the open access vessels is included in the estimate for Alternative 1G because of the relatively high open access trip limit alternatives associated with 1G (20,000–121,000 mt). Alternative 1E restricts capacity the most, and results in a 49-percent reduction in capacity compared to the no action alternative. The least restrictive alternatives (1B and 1F) result in a 35-percent capacity reduction. The preferred alternative (1D) is the second most restrictive, and results in a 47-percent capacity reduction compared to no action. Alternatives with lower capacity, such as the preferred alternative, could provide greater long-term economic benefits to the qualifying fleet if reduced capacity contributes to the continued health of the mackerel resource.

Alternative 1H and 1I would grant Tier 3 permits to limited access Atlantic herring vessels that would not otherwise qualify for a limited access mackerel permit. Alternative 1H would award a Tier 3 permit to vessels with Category

A or B herring permits, and Alternative 1I would award Tier 3 permits to vessels with Category A, B, or C herring permits. Individual vessels are known to target both mackerel and Atlantic herring on the same trip. This provision would prevent forced regulatory discards of incidentally captured mackerel on trips primarily targeting Atlantic herring, and would be expected to result in positive economic benefits for the Atlantic herring fleet. The Council ultimately did not select this alternative because it concluded that the preferred open access mackerel possession limit (20,000 lb (9.07 mt) per trip) would be sufficient to prevent regulatory discards. This alternative was not expected to have a large economic impact on the overall mackerel fishery, as this small number of vessels would be granted access to Tier 3, which would be limited by low trip limits or a Tier allocation.

Quota Allocation for Limited Access Tiers

The FEIS describes four alternatives for allocating the commercial mackerel quota between the limited access Tiers. These alternatives were proposed as another mechanism to ensure that each Tier in the limited access program maintained their historical level of participation in the mackerel fishery in the future. The action alternatives would create a shared allocation for Tier 1, Tier 3, and the open access vessels, but allocate Tier 2 the percentage of total landings that Tier 2 landed from 1997–2007 (2B), double the Tier 2 percentage from 1997–2007 (2C), or triple the Tier 2 percentage from 1997–2007 (2D). Alternatives 2C and 2D feature a provision that, if less than half of Tier 2's allocation has been harvested on April 1, would transfer half of the remaining allocation to the Tier 1/Tier 3/open access allocation.

Based on public comment after the Draft Environmental Impact Statement (DEIS) was published, the Council modified alternatives 1C and 1D (preferred) to provide accommodations for smaller, historical participants in the mackerel fishery. These alternatives would result in more Tier 3 qualifiers, and would initially award Tier 3 a fairly high trip limit in order to allow the qualifiers occasional sizeable landings of mackerel. However, these alternatives would also cap Tier 3 at a maximum of 7 percent of the commercial quota, with no additional allocations for any other Tiers. Given the selection of Alternative 1D as preferred, the Council ultimately recommended the no action alternative regarding allocations for Tier 2.

All three action alternatives base the Tier 2 quota on a minimum of 100 percent of their collective landings from 1997–2007. When combined with the tiered limited access alternatives described above, the resulting Tier 2 allocations would range from 3.5 to 3.8 percent of the annual commercial mackerel quota for Alternative 2B; 7.0 to 7.7 percent of the quota for 2C; and 10.5 to 11.5 percent of the quota for 2D. Given the lower 2011 mackerel quotas, these allocations may constrain landings for all Tiers. The quota transfer provisions in 2C and 2D could benefit Tier 1 in that they would help avoid a situation where Tier 1 is closed, but Tier 2 is left open with a significant portion of its allocation unused.

The no action alternative (preferred), which also includes a cap on Tier 3 under preferred Alternative 1D, should not have substantial economic impact on most fishery participants. While Tier 3 would include an estimated 329 vessels with a relatively high trip limit, the Tier would be capped at a maximum of 7 percent of the commercial fishery allocation, so it should not affect the directed fishery. The economic impact of the Tier 2 allocations depends on Tier activity. If fishing opportunities expand for Tier 2, the no action alternative could allow Tier 2 participants to increase their activity, which could negatively impact other Tiers also attempting to access quota. On the other hand, the no action alternative could have negative impacts on Tier 2 if Tier 1 is very active in a given year and accesses a significant amount of the quota before Tier 2 vessels are able to given Tier 1's higher capacity.

Limited Access Trip Limits

Amendment 11 includes five trip limit alternatives in addition to the no action and preferred alternative. The trip limits analyzed in the FEIS are intended to restrict vessels to a range of landings that are characteristic of trips by vessels within a Tier. Under all alternatives, Tier 1 is not constrained by a trip limit, and all other trip limits would be established annually through specifications. The preferred alternative (3F) would initially set the trip limits at 135,000 lb (61.24 mt) for Tier 2; 100,000 lb (45.36 mt) for Tier 3; and 20,000 lb (9.07 mt) for open access. Alternatives 3B, 3C, and 3D would initially set the trip limits for Tier 2, Tier 3, and open access vessels such that 99 percent, 98 percent, and 95 percent of the trips in each would not have been affected, respectively. This would result in initial trip limits ranging from 39,000–553,000 lb (14.6–206.4 mt) for Tier 2; 4,000–100,000 lb (1.5–37.3 mt) for Tier 3; and 1,000–20,000 lb (0.4–7.5 mt) for open access, depending on the selected limited access program. Alternative 3E initially exempts Tier 2 from a trip limit, and sets all other trip limits in the range described in Alternatives 3B–3D. Alternative 3G was designed to be selected with Alternative 1G (single-tiered alternative), and would initially set the open access trip limit in range calculated for Tier 2 with Alternatives 3B–3D under Alternative 1B (61,000–121,000 lb; 22.8–45.2 mt).

The alternatives analyzed in the FEIS where designed to establish a trip limits that would be higher than historical landings for a majority of the fleet. Accordingly, none of the proposed trip limits are expected to have a negative economic impact on most of the mackerel fleet. In addition, the Tiers with trip limits typically derive a small percentage of their revenue from mackerel (less than 2 percent), so the trip limits are not expected to limit the contribution of mackerel to these vessels' annual revenue. In the event that mackerel availability increases in the future, the trip limits will benefit all mackerel fishery participants in that they will keep vessels in one Tier from significantly expanding effort to the point that their activity is characteristic of a higher Tier; put another way, trip limits could reduce additional capitalization, which could have long-term economic benefits if lower fishery capacity helps sustain the mackerel resource.

Limited Access Permit Provisions

Amendment 11 includes most of the provisions adopted in other limited access fisheries in the Northeast Region to govern the initial qualification process, future ownership changes, and vessel replacements. For the most part, there is no direct economic impact. The nature of a limited access program requires rules for governing the transfer of limited access fishing permits. The procedures have been relatively standard for previous limited access programs, which makes it easier for a vessel owner issued permits for several limited access fisheries to undertake vessel transactions. The standard provisions adopted in Amendment 11 are those governing change in ownership; replacement vessels; CPH; abandonment or voluntary relinquishment of permits; and appeal and denial of permits. This action would also allow a vessel owner to retain an open access mackerel fishing history prior to the implementation of Amendment 11 to be eligible for issuance of a mackerel permit based on the eligibility of the vessel that was

sold, even if the vessel was sold with other limited access permits.

The economic impacts of the limited access permit provisions are analyzed in section 7.5.4 of the Amendment 11 document. The preferred alternative that requires hold volume measurements for Tier 1 and Tier 2 vessels would cost qualifiers for these permits an estimated $4,000 per vessel, not including travel expenses, and would prevent such vessels from increasing hold volume by more than 10 percent through refitting or replacement. This provision, and other provisions that restrict vessel upgrades, may constrain future business opportunities for vessels with immediate plans for vessel refitting or replacement. However, these restrictions may have long-term benefits to fishery participants by limiting capitalization in the mackerel fishery. The proposed regulations regarding qualification with retained vessel histories may have positive economic impacts for participants that sold their vessel but retained their mackerel fishing history. However, this provision could result in more vessels qualifying for mackerel permits, which may result in increased fishery capitalization. This could have a negative impact on the mackerel fleet if any additional capitalization impacts the sustained health of the mackerel resource. The preferred alternative requiring weekly VTR submissions from Tier 3 vessels is expected to cost qualifiers an additional $5,790.40 annually for postage.

EFH Updates

EFH designations identify the geographic domain within which fishery management measures that would minimize the adverse impacts of fishing and non-fishing activities could be implemented. The no action alternative would maintain the current text and map designations for EFH for all MSB species and life stages. The preferred alternative would designate as EFH the area associated with 90 percent of the cumulative geometric mean catches for non-overfished species, and the area associated with 95 percent of the cumulative geometric mean catches for unknown or overfished species. The three non-preferred alternatives vary slightly from the preferred, and include: (1) 75 percent area for non-overfished species, 90 percent for unknown or overfished species; (2) 95 percent area for non-overfished species, 100 percent for unknown or overfished species; and (3) 100 percent for all species.

With the exception of egg life stage for *Loligo,* all of the MSB species are pelagic and have life stages that inhabit the water column. Because the fishing gears that have the potential to adversely impact EFH are bottom-tending, the EFH for MSB species is not vulnerable to fishing impacts. None of the EFH alternatives analyzed in Amendment 11 would result in regulations affecting fishing activity. Accordingly, none of analyzed alternatives are expected to have negative economic impact on the fishing industry. Overall, the preferred alternative would allow for more effective consultations on oversight of EFH when compared to current EFH definitions, which could have positive impacts on the MSB resource.

Recreational Mackerel Allocation

The commercial fishery currently closes when it reaches 90 percent of the total mackerel quota (commercial plus recreational). It is assumed that recreational fishery will harvest 15,000 mt of the commercial quota each year, regardless of the total commercial quota, but there is no hard allocation for the recreational fishery. The no action alternative would maintain the assumption that the recreational mackerel fishery could harvest 15,000 mt of the commercial quota. If the mackerel fishery is closed at 90 percent of the commercial quota, and the recreational fishery was actually able to harvest the assumed 15,000 mt, the mackerel quota would be exceeded. For example, the commercial mackerel quota for the 2011 fishing year is 46,779 mt. If the commercial mackerel fishery is closed when 90 percent of this quota is attained (42,101 mt), and the recreational mackerel fishery has harvested the assumed 15,000 mt, then the mackerel quota would be exceeded by 22 percent (42,101 mt + 15,000 mt = 57,101 mt). Mackerel quota overages can compromise the sustainability of the resource, resulting in negative long-term economic impacts on the fishery.

The preferred alternative would designate an allocation for the recreational mackerel fishery that corresponds to the proportion of total U.S. landings that were accounted for by the recreational fishery from 1997–2007 times 1.5 (6.2 percent of total U.S. mackerel landings). Other alternatives include an allocation equal to the proportion of U.S. landings accounted for by the recreational mackerel fishery during this period (4.1 percent), and two times the proportion from this period (8.2 percent).

The proposed allocation is unlikely to constrain the current operations of the recreational mackerel fishery. Recreational landings from 2000–2009 ranged from 530–1,633 mt, with average recreational landings of 774 mt from 2007–2009. Under the preferred alternative, the recreational sector would have received an allocation of 2,900 mt in 2011 (6.2 percent of 46,779 mt). Given recent reduced mackerel quotas, the proposed recreational mackerel allocation could constrain the commercial mackerel fishery compared to the no action alternative. However, the constraint on the commercial fishery is more related to the overall quota than to any of the potential recreational allocations considered in Amendment 11.

At-Sea Processing

Finally, Amendment 11 considered the establishment of a cap for at-sea processing via transfers for the mackerel fishery. The action alternatives included caps on at-sea processing initially set equal to 7 percent, 14 percent, 21 percent, 50 percent, or 75 percent of the mackerel initial optimum yield (IOY), with the cap set annually through specifications. Though there has not been at-sea processing for mackerel by mother ship-type processors since the foreign fishery ended in the early 1990s, the Council developed this set of alternatives in response to public comment about the potential impacts if large-scale at-sea processing of mackerel were to commence in the future. In particular, commenters noted that, if there were significant amounts of at-sea mackerel processing, the disruption of the supply of mackerel to land-based processors could have negative economic impacts on fishing communities.

There is little information available about the possible impacts of at-sea processing in the mackerel fishery. Under the proposed no action alternative, if at-sea processing were to become significant for mackerel, an unlimited portion of the mackerel market share could be transferred to at-sea processors. Land-based mackerel processors, and the shoreside communities in which they reside, would be impacted to the extent that mackerel processing shifts to the at-sea operations. Limiting at-sea processing (action alternatives) could have economic benefits by ensuring a portion of the mackerel supply would still be available to land-based mackerel processors.

List of Subjects in 50 CFR Part 648

Fisheries, Fishing, Recordkeeping and reporting requirements.

Dated: July 27, 2011.

John Oliver,

Deputy Assistant Administrator for Operations, National Marine Fisheries Service.

For the reasons set out in the preamble, 50 CFR part 648 is proposed to be amended as follows:

PART 648—FISHERIES OF THE NORTHEASTERN UNITED STATES

1. The authority citation for part 648 continues to read as follows:

Authority: 16 U.S.C. 1801 *et seq.*

2. In § 648.4, paragraph (a)(5)(iii) is revised, and paragraph (c)(2)(vii) is added to read as follows:

§ 648.4 Vessel permits.

(a) * * *

(5) * * *

(iii) *Limited access Atlantic mackerel permits.* (A) *Vessel size restriction.* A vessel of the United States is eligible for and may be issued an Atlantic mackerel permit to fish for, possess, or land Atlantic mackerel in or from the EEZ, except for any vessel that is greater than or equal to 165 ft (50.3 m) in length overall (LOA), or greater than 750 gross registered tons (680.4 mt), or the vessel's total main propulsion machinery is greater than 3,000 horsepower. Vessels that exceed the size or horsepower restrictions may seek to obtain an at-sea processing permit specified in § 648.6(a)(2)(i).

(B) *Limited access mackerel permits.* A vessel of the United States that fishes for, possesses, or lands more than 20,000 lb (7.46 mt) of mackerel per trip, except vessels that fish exclusively in state waters for mackerel, must have been issued and carry on board one of the limited access mackerel permits described in paragraphs (a)(5)(iii)(B)(*1*) through (*3*) of this section, including both vessels engaged in pair trawl operations.

(*1*) *Tier 1 Limited Access Mackerel Permit.* A vessel may fish for, possess, and land unlimited amounts of mackerel, provided the vessel qualifies for and has been issued this permit, subject to all other regulations of this part.

(*2*) *Tier 2 Limited Access Mackerel Permit.* A vessel may fish for, possess, and land up to 135,000 lb (50 mt) of mackerel per trip, provided the vessel qualifies for and has been issued this permit, subject to all other regulations of this part.

(*3*) *Tier 3 Limited Access Mackerel Permit.* A vessel may fish for, possess, and land up to 100,000 lb (37.3 mt) of mackerel per trip, provided the vessel qualifies for and has been issued this permit, subject to all other regulations of this part.

(C) *Eligibility criteria for mackerel permits.* A vessel is eligible for and may be issued a Tier 1, Tier 2, or Tier 3 Limited Access Mackerel Permit if it meets the permit history criteria in paragraph (a)(5)(iii)(C)(*1*) of this section and the relevant landings requirements specified in paragraphs (a)(5)(iii)(C)(*2*) through (*4*) of this section. The permit criteria and landings requirement must either be derived from the same vessel, or joined on a vessel through replacement prior to March 21, 2007.

(*1*) *Permit history criteria for Limited Access Mackerel Permits.* (*i*) The vessel must have been issued a Federal mackerel permit that was valid as of March 21, 2007. The term ''as of'' means that the vessel must have had a valid mackerel permit on March 21, 2007.

(*ii*) The vessel is replacing a vessel that was issued a Federal mackerel permit that was valid as of March 21, 2007. To qualify as a replacement vessel, the replacement vessel and the vessel being replaced must both be owned by the same vessel owner; or if the vessel being replaced was sunk or destroyed, the vessel owner must have owned the vessel being replaced at the time it sunk or was destroyed; or, if the vessel being replaced was sold to another person, the vessel owner must provide a copy of a written agreement between the buyer of the vessel being replaced and the owner/seller of the vessel, documenting that the vessel owner/seller retained the mackerel permit and all mackerel landings history.

(*2*) *Landings criteria for Limited Access Mackerel Permits.* (*i*) *Tier 1.* The vessel must have landed at least 400,000 lb (149.3 mt) of mackerel in any one calendar year between January 1, 1997, and December 31, 2005, as verified by dealer reports submitted to NMFS or documented through valid dealer receipts, if dealer reports were not required by NMFS. The owners of vessels that fished in pair trawl operations may provide landings information as specified in paragraph (a)(5)(iii)(C)(*2*)(*iv*) of this section. Landings made by a vessel that is being replaced may be used to qualify a replacement vessel consistent with the requirements specified in paragraph (a)(5)(iii)(C)(*1*)(*ii*) of this section.

(*ii*) *Tier 2.* The vessel must have landed at least 100,000 lb (37.3 mt) of mackerel in any one calendar year between March 1, 1994, and December 31, 2005, as verified by dealer reports submitted to NMFS or documented through valid dealer receipts, if dealer reports were not required by NMFS. The owners of vessels that fished in pair trawl operations may provide landings information as specified in paragraph (a)(5)(iii)(C)(*2*)(*iv*) of this section. Landings made by a vessel that is being replaced may be used to qualify a replacement vessel consistent with the requirements specified in paragraph (a)(5)(iii)(C)(*1*)(*ii*) of this section.

(*iii*) *Tier 3.* The vessel must have landed at least 1,000 lb (0.4 mt) of mackerel in any one calendar year between March 1, 1994, and December 31, 2005, as verified by dealer reports submitted to NMFS or documented through valid dealer receipts, if dealer reports were not required by NMFS. The owners of vessels that fished in pair trawl operations may provide landings information as specified in paragraph (a)(5)(iii)(C)(*2*)(*iv*) of this section. Landings made by a vessel that is being replaced may be used to qualify a replacement vessel consistent with the requirements specified in paragraph (a)(5)(iii)(C)(*1*)(*ii*) of this section.

(*iv*) *Landings criteria for vessels using landings from pair trawl operations.* To qualify for a limited access permit using landings from pair trawl operations, the owners of the vessels engaged in that operation must agree on how to divide such landings between the two vessels and apply for the permit jointly, as supported by the required NMFS dealer reports or signed dealer receipts.

(*3*) *CPH.* A person who does not currently own a fishing vessel, but owned a vessel that satisfies the permit eligibility requirement in paragraph (a)(5)(iii)(B)(*1*) and (*2*) of this section that has sunk, been destroyed, or transferred to another person without its fishing and permit history, and that has not been replaced, may apply for and receive a CPH. A CPH allows for a replacement vessel to obtain the relevant limited access mackerel permit if the fishing and permit history of such vessel has been retained lawfully by the applicant as specified in paragraph (a)(5)(iii)(C)(*1*)(*ii*) of this section. If the vessel sank, was destroyed, or was transferred before March 21, 2007, the permit issuance criteria may be satisfied if the vessel was issued a valid Federal mackerel permit at any time between March 21, 2006, and March 21, 2007.

(D) *Application/renewal restrictions.* See paragraph (a)(1)(i)(B) of this section. Applications for a limited access mackerel permit described in paragraph (a)(5)(iii) of this section must be postmarked no later than December 31, 2012. Applications for limited access mackerel permits that are not postmarked before December 31, 2012, will not be processed because of this regulatory restriction, and returned to

the sender with a letter explaining the denial. Such denials may not be appealed and shall be the final decision of the Department of Commerce.

(E) *Qualification restrictions.* (*1*) See paragraph (a)(1)(i)(C) of this section. The following restrictions in paragraphs (a)(5)(iii)(E)(*2*) and (*3*) of this section are applicable to limited access mackerel permits.

(*2*) Mackerel landings history generated by separate owners of a single vessel at different times during the qualification period for limited access mackerel permits may be used to qualify more than one vessel, provided that each owner applying for a limited access mackerel permit demonstrates that he/she created distinct fishing histories, that such histories have been retained, and if the vessel was sold, that each applicant's eligibility and fishing history is distinct. In such a case, each applicant would still need to have been issued a valid mackerel permit as of March 21, 2007, in order to create a full eligibility, as detailed in paragraph (a)(5)(iii)(C) of this section.

(*3*) A vessel owner applying for a limited access mackerel permit who sold or transferred a vessel with non-mackerel limited access permits, as specified in paragraph (a)(1)(i)(D) of this section, and retained only the mackerel permit and landings history of such vessel as specified in paragraph (a)(1)(i)(D) of this section, before April 3, 2009, may use the mackerel history to qualify a different vessel for the initial limited access mackerel permit, regardless of whether the history from the sold or transferred vessel was used to qualify for any other limited access permit. Such eligibility may be used if the vessel for which the initial limited access mackerel permit has been submitted meets the upgrade restrictions described at paragraph (a)(5)(iii)(H) of this section. Applicants must be able to provide baseline documentation for both vessels in order to be eligible to use this provision.

(F) *Change of ownership.* See paragraph (a)(1)(i)(D) of this section.

(G) *Replacement vessels.* See paragraph (a)(1)(i)(E) of this section.

(H) *Vessel baseline specification.* (*1*) In addition to the baseline specifications specified in paragraph (a)(1)(i)(H) of this section, the volumetric fish hold capacity of a vessel at the time it was initially issued a Tier 1 or Tier 2 limited access mackerel permit will be considered a baseline specification. The fish hold capacity measurement must be obtained from an individual credentialed as a Certified Marine Surveyor with a fishing specialty by the National Association of Marine Surveyors (NAMS) or from an individual credentialed as an Accredited Marine Surveyor with a fishing specialty by the Society of Accredited Marine Surveyors (SAMS). Vessels that are sealed by the Maine State Sealer of Weights and Measures will also be deemed to meet this requirement. Vessels that qualify for a Tier 1 or Tier 2 mackerel permit must submit a fish hold capacity measurement to NMFS with the annual permit renewal application for the 2013 fishing year, as specified in paragraph (c)(2)(viii) of this section, or with the first vessel replacement application after a vessel qualifies for a Tier 1 or Tier 2 mackerel permit, whichever is sooner.

(*2*) If a mackerel CPH is initially issued, the vessel that provided the CPH eligibility establishes the size baseline against which future vessel size limitations shall be evaluated, unless the applicant has a vessel under contract prior to the submission of the mackerel limited access application. The replacement application to move permits onto the contracted vessel must be received by December 31, 2013. If the vessel that established the CPH is less than 20 ft (6.09 m) in length, then the baseline specifications associated with other limited access permits in the CPH suite will be used to establish the mackerel baseline specifications. If the vessel that established the CPH is less than 20 ft (6.09 m) in length, the limited access mackerel eligibility was established on another vessel, and there are no other limited access permits in the CPH suite, then the applicant must submit valid documentation of the baseline specifications of the vessel that established the eligibility. The hold capacity baseline for such vessels will be the hold capacity of the first replacement vessel after the permits are removed from CPH.

(I) *Upgraded vessel.* See paragraph (a)(1)(i)(F) of this section. In addition, for Tier 1 and Tier 2 limited access mackerel permits, the replacement vessel's volumetric fish hold capacity may not exceed by more than 10 percent the volumetric fish hold capacity of the vessel's baseline specifications. The modified fish hold, or the fish hold of the replacement vessel, must be resurveyed by a surveyor (accredited as in paragraph (a)(5)(iii)(H) of this section) unless the replacement vessel already had an appropriate certification, and the documentation would have to be submitted to NMFS.

(J) *Consolidation restriction.* See paragraph (a)(1)(i)(G) of this section.

(K) *Confirmation of permit history.* See paragraph (a)(1)(i)(J) of this section.

(L) *Abandonment or voluntary relinquishment of permits.* See paragraph (a)(1)(i)(K) of this section.

(M) *Appeal of denial of permit.* (*1*) *Eligibility.* Any applicant eligible to apply for a limited access mackerel permit who is denied such permit may appeal the denial to the Regional Administrator within 30 days of the notice of denial. The only ground for appeal is that the Regional Administrator erred in concluding that the vessel did not meet the criteria in this section. The appeal must set forth the basis for the applicant's belief that the decision of the Regional Administrator was made in error.

(*2*) *Appeal review.* Applicants have two opportunities to appeal the denial of a limited access mackerel permit. The review of initial appeals will be conducted under the authority of the Regional Administrator at NMFS's Northeast Regional Office. The Regional Administrator shall appoint a hearing officer for review of second denial appeals.

(*i*) An appeal of the denial of an initial permit application (first level of appeal) must be made in writing to NMFS Northeast Regional Administrator. Appeals must be based on the grounds that the information used by the Regional Administrator in denying the permit was incorrect. The only items subject to appeal are the accuracy of the amount of landings, and the correct assignment of landings to a vessel and/or permit holder. Appeals must be submitted to the Regional Administrator, postmarked no later than 30 days after the denial of an initial limited access mackerel permit application. The appeal shall set forth the basis for the applicant's belief that the Regional Administrator's decision was made in error. The appeal must be in writing, must state the specific grounds for the appeal, the limited access mackerel permit category for which the applicant believes he should qualify, and must include information to support the appeal. The appellant may also request an LOA, as described in paragraph (a)(5)(iii)(M)(*3*) of this section. The appeal will not be reviewed without submission of information in support of the appeal. The Regional Administrator would appoint a designee to make the initial decision on the appeal.

(*ii*) Should the appeal be denied, the applicant may request a hearing to review the Regional Administrator's appeal decision (second level of appeal). Such a request must be in writing, postmarked no later than 30 days after the appeal decision, must state the specific grounds for the hearing request,

and must include information to support the hearing request. If the request for a hearing to review of the appeal decision is not made within 30 days, the appeal decision is the final administrative action of the Department of Commerce. The appeal will not be reviewed in a hearing without submission of information in support of the hearing request. The Regional Administrator will appoint a hearing officer; the hearing process may take place within the National Appeals program. The hearing officer shall make findings and a recommendation to the Regional Administrator, which shall be advisory only. The Regional Administrator's decision is the final administrative action of the Department of Commerce.

(*3*) A vessel denied a limited access mackerel permit may fish for mackerel, provided that the denial has been appealed, the appeal is pending, and the vessel has on board a letter from the Regional Administrator authorizing the vessel to fish under the limited access category for which the applicant has submitted an appeal. A request for a letter of authorization (LOA) must be made at the time of appeal. The Regional Administrator will issue such a letter for the pending period of any appeal. The LOA must be carried on board the vessel. If the appeal is finally denied, the Regional Administrator shall send a notice of final denial to the vessel owner; the authorizing letter becomes invalid 5 days after the receipt of the notice of denial, but no later than 10 days from the date of the letter of denial.

(iv) *Atlantic mackerel incidental catch permits.* Any vessel of the United States may obtain a permit to fish for or retain up to 20,000 lb (7.46 mt) of Atlantic mackerel as an incidental catch in another directed fishery, provided that the vessel does not exceed the size restrictions specified in paragraph (a)(5)(iii)(A) of this section. The incidental catch allowance may be revised by the Regional Administrator based upon a recommendation by the Council following the procedure set forth in § 648.21.

(v) *Party and charter boat permits.* The owner of any party or charter boat must obtain a permit to fish for, possess, or retain in or from the EEZ mackerel, squid, or butterfish while carrying passengers for hire.

* * * * *

(c) * * *

(2) * * *

(vii) The owner of a vessel that has been issued a Tier 1 or Tier 2 limited access mackerel must submit a volumetric fish hold certification measurement, as described in paragraph (a)(5)(iii)(H) of this section, with the permit renewal application for the 2013 fishing year.

* * * * *

3. In § 648.7, paragraph (f)(2)(i) is revised to read as follows:

§ 648.7 Recordkeeping and reporting requirements.

* * * * *

(f) * * *

(2) * * *

(i) For any vessel not issued a NE multispecies permit or a Tier 3 Limited Access mackerel permit, fishing vessel log reports, required by paragraph (b)(1)(i) of this section, must be postmarked or received by NMFS within 15 days after the end of the reporting month. If no fishing trip is made during a particular month for such a vessel, a report stating so must be submitted, as instructed by the Regional Administrator. For any vessel issued a NE multispecies permit or a Tier 3 Limited Access mackerel permit, fishing vessel log reports must be postmarked or received by midnight of the first Tuesday following the end of the reporting week. If no fishing trip is made during a reporting week for such a vessel, a report stating so must be submitted and received by NMFS by midnight of the first Tuesday following the end of the reporting week, as instructed by the Regional Administrator. For the purposes of this paragraph (f)(2)(i), the date when fish are offloaded will establish the reporting week or month that the VTR must be submitted to NMFS, as appropriate. Any fishing activity during a particular reporting week (i.e., starting a trip, landing, or offloading catch) will constitute fishing during that reporting week and will eliminate the need to submit a negative fishing report to NMFS for that reporting week. For example, if a vessel issued a NE multispecies permit or Tier 3 Limited Access Mackerel Vessel begins a fishing trip on Wednesday, but returns to port and offloads its catch on the following Thursday (i.e., after a trip lasting 8 days), the VTR for the fishing trip would need to be submitted by midnight Tuesday of the third week, but a negative report (i.e., a ''did not fish'' report) would not be required for either week.

* * * * *

4. In § 648.14, paragraph (g)(1)(iii) is removed; paragraphs (g)(2)(ii)(C), (g)(2)(ii)(D) and (g)(2)(ii)(E) are revised, and paragraphs (g)(2)(ii)(F), (g)(2)(iii)(D) and (g)(2)(iv) are added to read as follows:

§ 648.14 Prohibitions.

* * * * *

(g) * * *

(2) * * *

(ii) * * *

(C) Possess more than the incidental catch allowance of mackerel, unless issued a Limited Access mackerel permit.

(D) Take, retain, possess, or land mackerel, squid, or butterfish in excess of a possession allowance specified in § 648.25.

(E) Possess 5,000 lb (2.27 mt) or more of butterfish, unless the vessel meets the minimum mesh requirements specified in § 648.23(a).

(F) Take, retain, possess, or land mackerel, squid, or butterfish after a total closure specified under § 648.22.

* * * * *

(iii) * * *

(D) If fishing with midwater trawl or purse seine gear, fail to comply with the requirements of § 648.80(d) and (e).

* * * * *

(iv) *Observer requirements for Loligo fishery.* Fail to comply with any of the provisions specified in § 648.26.

* * * * *

6. In § 648.21, paragraphs (a)(3), (b)(2)(iii) introductory text, (c)(3), (c)(6), and (c)(9) are revised to read as follows:

§ 648.21 Procedures for determining initial annual amounts.

(a) * * *

(3) IOY, including RQ, DAH, Tier 3 allocation (up to 7 percent of the DAH), DAP, recreational allocation, joint venture processing (JVP), if any, and TALFF, if any, for mackerel, which, subject to annual review, may be specified for a period of up to 3 years. The Monitoring Committee may also recommend that certain ratios of TALFF, if any, for mackerel to purchases of domestic harvested fish and/or domestic processed fish be established in relation to the initial annual amounts.

* * * * *

(b) * * *

(2) * * *

(iii) IOY is composed of RQ, DAH, Tier 3 allocation (up to 7 percent of DAH), recreational allocation, and TALFF. Recreational allocation shall be equal to 6.2 percent of the mackerel ABC. RQ shall be based on request for research quota as described in paragraph (g) of this section. DAH, Tier 3 allocation (up to 7 of the DAH), recreational allocation, DAP, and JVP shall be set after deduction for RQ, if applicable, and must be projected by reviewing data from sources specified in paragraph (b) of this section and other

relevant data, including past domestic landings, projected amounts of mackerel, necessary for domestic processing and for joint ventures during the fishing year, and other data pertinent for such projection. The JVP component of DAH is the portion of DAH that domestic processors either cannot or will not use. In addition, IOY shall be based on the criteria set forth in the Magnuson-Stevens Act, specifically section 201(e), and on the following economic factors:

* * * * *

(c) * * *

(3) The amount of *Loligo, Illex,* and butterfish that may be retained and landed by vessels issued the incidental catch permit specified in § 648.4(1)(5)(ii), and the amount of mackerel that may be retained, possessed and landed by any of the limited access mackerel permits described at § 648.4(1)(5)(iii) and the incidental mackerel permit at § 648.4(1)(5)(iv).

* * * * *

(6) Commercial seasonal quotas/closures for *Loligo* and *Illex,* and allocation for the Limited Access Mackerel Tier 3.

* * * * *

(9) Recreational allocation for mackerel.

* * * * *

7. In § 648.22, paragraph (a)(1) is revised to read as follows:

§ 648.22 Closure of the fishery.

(a) * * *

(1) *Mackerel closures.* (i) NMFS shall close the commercial mackerel fishery in the EEZ when the Regional Administrator projects that 90 percent of the mackerel DAH is harvested, if such a closure is necessary to prevent the DAH from being exceeded. The closure of the directed fishery shall be in effect for the remainder of that fishing period, with incidental catches allowed as specified in § 648.25(a)(2)(i). When the Regional Administrator projects that the DAH for mackerel shall be landed, NMFS shall close the mackerel fishery in the EEZ and the incidental catches specified for mackerel at § 648.25(a)(2)(i) will be prohibited.

(ii) NMFS shall close the Tier 3 commercial mackerel fishery in the EEZ when the Regional Administrator projects that 90 percent of the Tier 3 mackerel allocation is harvested, if such a closure is necessary to prevent the DAH from being exceeded. The closure of the Tier 3 commercial mackerel fishery shall be in effect for the remainder of that fishing period, with incidental catches allowed as specified in § 648.25(a)(2)(ii).

* * * * *

8. In § 648.24, paragraph (a)(1) is revised to read as follows:

§ 648.24 Framework adjustments to management measures.

(a) * * *

(1) *Adjustment process.* The Council shall develop and analyze appropriate management actions over the span of at least two Council meetings. The Council must provide the public with advance notice of the availability of the recommendation(s), appropriate justification(s) and economic and biological analyses, and the opportunity to comment on the proposed adjustment(s) at the first meeting and prior to and at the second Council meeting. The Council's recommendations on adjustments or additions to management measures must come from one or more of the following categories: Minimum fish size, maximum fish size, gear restrictions, gear requirements or prohibitions, permitting restrictions, recreational allocation, recreational possession limit, recreational seasons, closed areas, commercial seasons, commercial trip limits, commercial quota system including commercial quota allocation procedure and possible quota set asides to mitigate bycatch, recreational harvest limit, annual specification quota setting process, FMP Monitoring Committee composition and process, description and identification of EFH (and fishing gear management measures that impact EFH), description and identification of habitat areas of particular concern, overfishing definition and related thresholds and targets, regional gear restrictions, regional season restrictions (including option to split seasons), restrictions on vessel size (LOA and GRT) or shaft horsepower, changes to the Northeast Region SBRM (including the CV-based performance standard, the means by which discard data are collected/obtained, fishery stratification, reports, and/or industry-funded observers or observer set-aside programs), any other management measures currently included in the FMP, set aside quota for scientific research, regional management, and process for inseason adjustment to the annual specification.

* * * * *

9. In § 648.25, paragraph (a) is revised to read as follows:

§ 648.25 Possession restrictions.

(a) *Atlantic mackerel.* (1) A vessel must be issued a valid limited access mackerel permit to fish for, possess, or land more than 20,000 lb (9.08 mt) of Atlantic mackerel from or in the EEZ per trip, provided that the fishery has not been closed because 90 percent of the DAH has been harvested, as specified in § 648.22(a)(1)(i).

(i) A vessel issued a Tier 1 Limited Access Mackerel Permit is authorized to fish for, possess, or land Atlantic mackerel with no possession restriction in the EEZ per trip, and may only land Atlantic mackerel once on any calendar day, which is defined as the 24-hr period beginning at 0001 hours and ending at 2,400 hours, provided that the fishery has not been closed because 90 percent of the DAH has been harvested, as specified in § 648.22(a)(1)(i).

(ii) A vessel issued a Tier 2 Limited Access Mackerel Permit is authorized to fish for, possess, or land up to 135,000 lb (61.23 mt) of Atlantic mackerel in the EEZ per trip, and may only land Atlantic mackerel once on any calendar day, which is defined as the 24-hr period beginning at 0001 hours and ending at 2400 hours, provided that the fishery has not been closed because 90 percent of the DAH has been harvested, as specified in § 648.22(a)(1)(i).

(iii) A vessel issued a Tier 3 Limited Access Mackerel Permit is authorized to fish for, possess, or land up to 100,000 lb (45.36 mt) of Atlantic mackerel in the EEZ per trip, and may only land Atlantic mackerel once on any calendar day, which is defined as the 24-hr period beginning at 0001 hours and ending at 2400 hours, provided that the fishery has not been closed because 90 percent of the Tier 3 allocation has been harvested, or 90 percent of the DAH has been harvested, as specified in § 648.22(a)(1)(i) and (ii).

(iv) A vessel issued an open access mackerel permit may fish for, possess, or land up to 20,000 lb (9.08 mt) of Atlantic mackerel in the EEZ per trip, and may only land Atlantic mackerel once on any calendar day, which is defined as the 24-hr period beginning at 0001 hours and ending at 2400 hours.

(v) Both vessels involved in a pair trawl operation must be issued a valid mackerel permits to fish for, possess, or land Atlantic mackerel in the EEZ. Both vessels must be issued the mackerel permit appropriate for the amount of mackerel jointly possessed by both of the vessels participating in the pair trawl operation.

(2) *Mackerel closure possession restrictions.* (i) *Commercial mackerel fishery.* During a closure of the commercial Atlantic mackerel fishery, including closure of the Tier 3 fishery, vessels issued a Limited Access Mackerel Permit may not fish for, possess, or land more than 20,000 lb

(9.08 mt) of Atlantic mackerel per trip at any time, and may only land Atlantic mackerel once on any calendar day, which is defined as the 24-hr period beginning at 0001 hours and ending at 2,400 hours.

(ii) [Reserved]

* * * * *

[FR Doc. 2011–19415 Filed 7–29–11; 8:45 am]

BILLING CODE 3510–22–P

Notices

Federal Register
Vol. 76, No. 147
Monday, August 1, 2011

This section of the FEDERAL REGISTER contains documents other than rules or proposed rules that are applicable to the public. Notices of hearings and investigations, committee meetings, agency decisions and rulings, delegations of authority, filing of petitions and applications and agency statements of organization and functions are examples of documents appearing in this section.

BUREAU OF CONSUMER FINANCIAL PROTECTION

Privacy Act of 1974, as Amended

AGENCY: Bureau of Consumer Financial Protection.

ACTION: Notice of Proposed Privacy Act System of Records.

SUMMARY: In accordance with the Privacy Act of 1974, as amended, the Bureau of Consumer Financial Protection, hereinto referred to as the Consumer Financial Protection Bureau (''CFPB'') gives notice of the establishment of a Privacy Act System of Records.

DATES: Comments must be received no later than August 31, 2011. The new system of records will be effective September 12, 2011 unless the comments received result in a contrary determination.

ADDRESSES: You may submit comments, identified by Docket No. CFPB–2011–0013, by any of the following methods:

- *Electronic: http://www.regulations.gov.* Follow the instructions for submitting comments.
- *Mail or Hand Delivery/Courier in Lieu of Mail:* Claire Stapleton, Chief Privacy Officer, Consumer Financial Protection Bureau, 1801 L Street, NW., Washington, DC 20036.

All submissions must include the agency name and docket number or Regulatory Information Number (RIN) for this notice. In general all comments received will be posted without change to *http://www.regulations.gov.* In addition, comments will be available for public inspection and copying at 1801 L St., NW., Washington, DC 20036, on official business days between the hours of 10 a.m. and 5 p.m. Eastern Time. You can make an appointment to inspect comments by telephoning (202) 435–7220. All comments, including attachments and other supporting materials, will become part of the public record and subject to public disclosure. You should submit only information that you wish to make available publicly.

FOR FURTHER INFORMATION CONTACT: Claire Stapleton, Chief Privacy Officer, Consumer Financial Protection Bureau, 1801 L Street, NW., Washington, DC 20036, (202) 435–7220.

SUPPLEMENTARY INFORMATION: The Dodd-Frank Wall Street Reform and Consumer Protection Act (''Act''), Public Law 111–203, Title X, established the CFPB to administer and enforce federal consumer financial protection law. The CFPB will maintain the records covered by this notice.

The new systems of records described in this notice, CFPB.004—Enforcement Database, will enable the CFPB to carry out its responsibilities with respect to the enforcement of federal consumer financial protection law. A description of the new system of records follows this Notice.

The report of a new system of records has been submitted to the Committee on Oversight and Government Reform of the House of Representatives, the Committee on Homeland Security and Governmental Affairs of the Senate, and the Office of Management and Budget, pursuant to Appendix I to OMB Circular A–130, ''Federal Agency Responsibilities for Maintaining Records About Individuals,'' dated November 30, 2000, and the Privacy Act, 5 U.S.C. 552a(r).

The system of records entitled, ''CFPB.004—Enforcement Database'' is published in its entirety below.

Dated: July 27, 2011.

Claire Stapleton,

Chief Privacy Officer.

CFPB.004

SYSTEM NAME:

CFPB Enforcement Database.

SYSTEM LOCATION:

Consumer Financial Protection Bureau, 1801 L Street, NW., Washington, DC 20036.

CATEGORIES OF INDIVIDUALS COVERED BY THE SYSTEM:

Covered individuals include:

(1) Individuals who are current or former directors, officers, employees, shareholders, agents, and independent contractors of covered persons or service providers, who are or have been the subjects of or otherwise associated with an investigation or enforcement action by the CFPB, or have been named in connection with suspicious activity reports or administrative enforcement orders or agreement. Covered persons and service providers include banks, savings associations, credit unions, thrifts, non-depository institutions, or other persons, offering, providing, or assisting with the provision of consumer financial products or services.

(2) Current, former, and prospective consumers who are or have been customers or prospective customers of, solicited by, or serviced by covered persons or service providers if such individuals have provided information, including complaints about covered persons or service providers, or are or have been witnesses in or otherwise associated with an enforcement action by the CFPB.

(3) Applicants, current and former directors, officers, employees, shareholders, agents, and independent contractors of persons and entities that have business relationships with covered persons or service providers who are or have been the subject of an enforcement action by the CFPB.

(4) Current, former, and prospective customers of persons and entities that have business relationships with covered persons or service providers that are or have been the subject of an enforcement action by the CFPB, and the customers are complainants against covered persons or service providers, or witnesses in or otherwise associated with an enforcement action.

(5) Other individuals who have inquired about or may have information relevant to an investigation or proceeding concerning a possible violation of federal consumer financial law. Information collected regarding consumer financial products and services is subject to the Privacy Act only to the extent that it concerns individuals; information pertaining to corporations and other business entities and aggregate, non-identifiable information is not subject to the Privacy Act.

CATEGORIES OF RECORDS IN THE SYSTEM:

Records maintained in the system may contain: Identifiable information about individuals such as name, address, e-mail address, phone number, social security number, employment status, age, date of birth, financial

information, credit information, and personal history. Records in this system are collected and generated during the investigation of potential violations and enforcement of laws and regulations under the jurisdiction of the CFPB and may include (1) Records provided to the CFPB about potential or pending investigations, administrative proceedings, and civil litigation; (2) evidentiary materials gathered or prepared by the CFPB or obtained for use in investigations, proceedings, or litigation, and work product derived from or related thereto; (3) staff working papers, memoranda, analyses, databases, and other records and work product relating to possible or actual investigations, proceedings, or litigation; (4) databases, correspondence, and reports tracking the initiation, status, and closing of investigations, proceedings, and litigation; (5) correspondence and materials used by the CFPB to refer criminal and other matters to the appropriate agency or authority, and records reflecting the status of any outstanding referrals; (6) correspondence and materials shared between the CFPB and other federal and state agencies; (7) consumer complaints made or referred to the CFPB.

AUTHORITY FOR MAINTENANCE OF THE SYSTEM:

Public Law 111–203, Title X, Sections 1011, 1012, 1021, codified at 12 U.S.C. 5491, 5492, 5511.[1]

PURPOSE(S):

The information in the system is being collected to enable the CFPB to carry out its responsibilities with respect to enforcement of Title X of the Dodd-Frank Wall Street Reform and Consumer Protection Act and other federal consumer financial law, including: (1) The investigation of potential violations of federal consumer financial law; (2) the pursuit of administrative or civil enforcement actions; and (3) the referral of matters, as appropriate, to the Department of Justice or other federal or state agencies.

ROUTINE USES OF RECORDS MAINTAINED IN THE SYSTEM, INCLUDING CATEGORIES OF USERS AND THE PURPOSES OF SUCH USES:

These records may be disclosed, consistent with the CFPB Disclosure of Records and Information Rules promulgated in the title of the CFR to:

(1) Appropriate agencies, entities, and persons when: (a) The CFPB suspects or has confirmed that the security or confidentiality of information in the system of records has been compromised; (b) the CFPB has determined that as a result of the suspected or confirmed compromise there is a risk of harm to economic or property interests, identity theft or fraud, or harm to the security or integrity of this system or other systems or programs (whether maintained by the CFPB or another agency or entity) that rely upon the compromised information; and (c) the disclosure made to such agencies, entities, and persons is reasonably necessary to assist in connection with the CFPB's efforts to respond to the suspected or confirmed compromise and prevent, minimize, or remedy such harm;

(2) Another federal or state agency to: (a) Permit a decision as to access, amendment or correction of records to be made in consultation with or by that agency; or (b) verify the identity of an individual or the accuracy of information submitted by an individual who has requested access to, or amendment or correction of records;

(3) To the Office of the President in response to an inquiry from that office made at the request of the subject of a record or a third party on that person's behalf;

(4) Congressional offices in response to an inquiry made at the request of the individual to whom the record pertains;

(5) Contractors, agents, or other authorized individuals performing work on a contract, service, cooperative agreement, job or other activity on behalf of the CFPB or Federal Government and who have a need to access information in the performance of their duties or activities;

(6) Any authorized agency or component of the Department of Treasury, the Department of Justice, the Federal Reserve System, the Federal Deposit Insurance Corporation or other law enforcement authorities including disclosure by such authorities:

(a) To the extent relevant and necessary in connection with litigation in proceedings before a court or other adjudicative body, where (i) the United States is a party to or has an interest in the litigation, including where the agency, or an agency component, or an agency official or employee in his or her official capacity, or an individual agency official or employee whom the Department of Justice or the Bureau has agreed to represent, is or may likely become a party, and (ii) the litigation is likely to affect the agency or any component thereof; or

(b) To outside experts or consultants when considered appropriate by CFPB staff to assist in the conduct of agency matters;

(7) The U.S. Department of Justice (''DOJ'') for its use in providing legal advice to the CFPB or in representing the CFPB in a proceeding before a court, adjudicative body, or other administrative body, where the use of such information by the DOJ is deemed by the CFPB to be relevant and necessary to the advice or proceeding, and in the case of a proceeding, such proceeding names as a party in interest:

(a) The CFPB;

(b) Any employee of the CFPB in his or her official capacity;

(c) Any employee of the CFPB in his or her individual capacity where DOJ or the CFPB has agreed to represent the employee; or

(d) The United States, where the CFPB determines that litigation is likely to affect the CFPB or any of its components;

(8) A grand jury pursuant either to a federal or state grand jury subpoena, or to a prosecution request that such record be released for the purpose of its introduction to a grand jury, where the subpoena or request has been specifically approved by a court. In those cases where the Federal Government is not a party to the proceeding, records may be disclosed if a subpoena has been signed by a judge;

(9) A court, magistrate, or administrative tribunal in the course of an administrative proceeding or judicial proceeding, including disclosures to opposing counsel or witnesses (including expert witnesses) in the course of discovery or other pre-hearing exchanges of information, litigation, or settlement negotiations, where relevant or potentially relevant to a proceeding, or in connection with criminal law proceedings;

(10) Appropriate agencies, entities, and persons, including but not limited to potential expert witnesses or witnesses in the course of investigations, to the extent necessary to secure information relevant to the investigation;

(11) Appropriate federal, state, local, foreign, tribal, or self-regulatory organizations or agencies responsible for investigating, prosecuting, enforcing, implementing, issuing, or carrying out a statute, rule, regulation, order, policy, or license if the information may be relevant to a potential violation of civil or criminal law, rule, regulation, order, policy or license; and

(12) An entity or person that is the subject of supervision or enforcement activities including examinations,

[1] Section 1066 of the Act grants the Secretary of the Treasury interim authority to perform certain functions of the CFPB. Pursuant to that authority, Treasury published rules on the Disclosure of Records and Information within 12 CFR Chapter X. This SORN is published pursuant to those rules and the Privacy Act.

investigations, administrative proceedings, and litigation, and the attorney or non-attorney representative for that entity or person.

POLICIES AND PRACTICES FOR STORING, RETRIEVING, ACCESSING, RETAINING, AND DISPENSING OF RECORDS IN THE SYSTEM:

STORAGE:

Paper and electronic records.

RETRIEVABILITY:

Records are retrievable by a variety of fields including without limitation the individual's name, address, account number, social security number, transaction number, phone number, date of birth, or by some combination thereof.

SAFEGUARDS:

Access to electronic records is restricted to authorized personnel who have been issued non-transferrable access codes and passwords. Other records are maintained in locked file cabinets or rooms with access limited to those personnel whose official duties require access.

RETENTION AND DISPOSAL:

The CFPB will maintain computer and paper records indefinitely until the National Archives and Record Administration approves the CFPB's records disposition schedule.

SYSTEM MANAGER(S) AND ADDRESS:

The Consumer Financial Protection Bureau, Assistant Director for Enforcement, 1801 L Street, NW., Washington, DC 20036.

NOTIFICATION PROCEDURE:

Individuals seeking notification and access to any record contained in this system of records, or seeking to contest its content, may inquire in writing in accordance with instructions appearing in Title 12, Chapter 10 of the CFR, ''Disclosure of Records and Information.'' Address such requests to: Chief Privacy Officer, Bureau of Consumer Financial Protection, 1801 L St., NW., Washington, DC 20036.

RECORD ACCESS PROCEDURES:

See ''Notification Procedures'' above.

CONTESTING RECORD PROCEDURES:

See ''Notification Procedures'' above.

RECORD SOURCE CATEGORIES:

Information in this system is obtained from banks, savings associations, credit unions, or non-depository institutions or other persons offering or providing consumer financial products or services, current, former, and prospective consumers who are or have been customers or prospective employees and agents of such persons, and current, former, and prospective customers of such entities and persons, and others with information relevant to the enforcement of federal consumer financial laws.

EXEMPTIONS CLAIMED FOR THE SYSTEM:

Portions of the records in this system are complied for law enforcement purposes and are exempt from disclosure under CFPB's Privacy Act regulations and 5 U.S.C. 552a(k)(2). Federal criminal law enforcement investigatory reports maintained as part of this system may be the subject of exemptions imposed by the originating agency pursuant to 5 U.S.C. 552a(j)(2).

[FR Doc. 2011–19424 Filed 7–29–11; 8:45 am]

BILLING CODE 4810–25–P

BUREAU OF CONSUMER FINANCIAL PROTECTION

Privacy Act of 1974, as Amended

AGENCY: Bureau of Consumer Financial Protection.

ACTION: Notice of Proposed Privacy Act System of Records.

SUMMARY: In accordance with the Privacy Act of 1974, as amended, the Bureau of Consumer Financial Protection, hereinto referred to as the Consumer Financial Protection Bureau (''CFPB'') gives notice of the establishment of a Privacy Act System of Records.

DATES: Comments must be received no later than August 31, 2011. The new system of records will be effective September 12, 2011 unless the comments received result in a contrary determination.

ADDRESSES: You may submit comments, identified by Docket No. CFPB–2011–0014, by any of the following methods:

- *Electronic: http://www.regulations.gov.* Follow the instructions for submitting comments.
- *Mail or Hand Delivery/Courier in Lieu of Mail:* Claire Stapleton, Chief Privacy Officer, Consumer Financial Protection Bureau, 1801 L Street, NW., Washington, DC 20036.

All submissions must include the agency name and docket number or Regulatory Information Number (RIN) for this notice. In general all comments received will be posted without change to *http://www.regulations.gov.* In addition, comments will be available for public inspection and copying at 1801 L St., NW., Washington, DC 20036, on official business days between the hours of 10 a.m. and 5 p.m. Eastern Time. You can make an appointment to inspect comments by telephoning (202) 435–7220. All comments, including attachments and other supporting materials, will become part of the public record and subject to public disclosure. You should submit only information that you wish to make available publicly.

FOR FURTHER INFORMATION CONTACT: Claire Stapleton, Chief Privacy Officer, Consumer Financial Protection Bureau, 1801 L. Street, NW., Washington, DC 20036, (202) 435–7220.

SUPPLEMENTARY INFORMATION: The Dodd-Frank Wall Street Reform and Consumer Protection Act (''Act''), Public Law 111–203, Title X, established the CFPB to administer and enforce federal consumer financial protection law. The CFPB will maintain the records covered by this notice.

The new systems of records described in this notice, CFPB.006—Social Networks and Citizen Engagement System, will assist the CFPB by providing effective, social media-based ways to share information and interact with the public. A description of the new system of records follows this Notice.

The report of a new system of records has been submitted to the Committee on Oversight and Government Reform of the House of Representatives, the Committee on Homeland Security and Governmental Affairs of the Senate, and the Office of Management and Budget, pursuant to Appendix I to OMB Circular A–130, ''Federal Agency Responsibilities for Maintaining Records About Individuals,'' dated November 30, 2000, and the Privacy Act, 5 U.S.C. 552a(r).

The system of records entitled, ''CFPB.006—Social Networks and Citizen Engagement System'' is published in its entirety below.

Dated: July 27, 2011.

Claire Stapleton,

Chief Privacy Officer.

CFPB.006

SYSTEM NAME:

CFPB Social Networks and Citizen Engagement System.

SYSTEM LOCATION:

Consumer Financial Protection Bureau, 1801 L Street, NW., Washington, DC 20036.

CATEGORIES OF INDIVIDUALS COVERED BY THE SYSTEM:

Users of social media who interact with the CFPB through various social media outlets, including but not limited to third-party sites and services such as

Facebook, Twitter, YouTube, and Flickr. Other covered individuals may include those who sign on to various parts of the CFPB web site with a user identity provided by a third-party, such as Disqus. These may be members of the public, employees, or contractors.

CATEGORIES OF RECORDS IN THE SYSTEM:

Records maintained in the system may contain information that an individual shares with the CFPB through various social media sites and services. They may also contain information that is stored to ensure that an individual can access web sites where a login is required. This may include without limitation: name, username, email address, birth date, security questions, IP addresses, location, passwords, authentication, business affiliation, demographic information, videos, photos, and other general information.

AUTHORITY FOR MAINTENANCE OF THE SYSTEM:

Public Law 111–203, Title X, Sections 1011, 1012, 1021, codified at 12 U.S.C. 5491, 5492, 5511. OMB Open Government Directive, M–10–06, Dec. 8, 2009. Presidential Memorandum to the Heads of Executive Departments and Agencies on Transparency and Open Government, January 21, 2009. OMB Guidance for Online Use of Web Measurement and Customization Technologies, M–10–22, June 25, 2010. OMB Guidance for Agency Use of Third-Party Websites and Applications, M–10–23, June 25, 2010. Executive Order 13571, Streamlining Service Delivery and Improving Customer Service, April 27, 2011.[1]

PURPOSE(S):

The information in the system is being collected to facilitate internal and external interactions concerning the CFPB and CFPB programs. The use of social media platforms will increase collaboration and transparency with the public, as well as employees and contractors. The use of social media will enable the CFPB to interact with the public in effective and meaningful ways, encourage the wide sharing of consumer financial information and the strengthening of an online community of consumers, and ensure that critical information about the agency and key consumer finance issues is distributed.

[1] Section 1066 of the Act grants the Secretary of the Treasury interim authority to perform certain functions of the CFPB. Pursuant to that authority, Treasury published rules on the Disclosure of Records and Information within 12 CFR Chapter X. This SORN is published pursuant to those rules and the Privacy Act.

ROUTINE USES OF RECORDS MAINTAINED IN THE SYSTEM, INCLUDING CATEGORIES OF USERS AND THE PURPOSES OF SUCH USES:

These records may be disclosed, consistent with the CFPB Disclosure of Records and Information Rules promulgated in the title of the CFR to:

(1) Appropriate agencies, entities, and persons when (a) the CFPB suspects or has confirmed that the security or confidentiality of information in the system of records has been compromised; (b) the CFPB has determined that as a result of the suspected or confirmed compromise there is a risk of harm to economic or property interests, identity theft or fraud, or harm to the security or integrity of this system or other systems or programs (whether maintained by the CFPB or another agency or entity) that rely upon the compromised information; and (c) the disclosure made to such agencies, entities, and persons is reasonably necessary to assist in connection with the CFPB's efforts to respond to the suspected or confirmed compromise and prevent, minimize, or remedy such harm;

(2) Another federal or state agency to: (a) permit a decision as to access, amendment or correction of records to be made in consultation with or by that agency; or (b) verify the identity of an individual or the accuracy of information submitted by an individual who has requested access to or amendment or correction of records;

(3) To the Office of the President in response to an inquiry from that office made at the request of the subject of a record or a third party on that person's behalf;

(4) Congressional offices in response to an inquiry made at the request of the individual to whom the record pertains;

(5) Contractors, agents, or other authorized individuals performing work on a contract, service, cooperative agreement, job or other activity on behalf of the CFPB or Federal Government and who have a need to access information in the performance of their duties or activities;

(6) Any authorized agency or component of the Department of Treasury, the Department of Justice, the Federal Reserve System, the Federal Deposit Insurance Corporation or other law enforcement authorities including disclosure by such authorities:

(a) To the extent relevant and necessary in connection with litigation in proceedings before a court or other adjudicative body, where (i) the United States is a party to or has an interest in the litigation, including where the agency, or an agency component, or an agency official or employee in his or her official capacity, or an individual agency official or employee whom the Department of Justice or the Bureau has agreed to represent, is or may likely become a party, and (ii) the litigation is likely to affect the agency or any component thereof; or

(b) To outside experts or consultants when considered appropriate by CFPB staff to assist in the conduct of agency matters;

(7) The U.S. Department of Justice (''DOJ'') for its use in providing legal advice to the CFPB or in representing the CFPB in a proceeding before a court, adjudicative body, or other administrative body, where the use of such information by the DOJ is deemed by the CFPB to be relevant and necessary to the advice or proceeding, and in the case of a proceeding, such proceeding names as a party in interest:

(a) The CFPB;

(b) Any employee of the CFPB in his or her official capacity;

(c) Any employee of the CFPB in his or her individual capacity where DOJ or the CFPB has agreed to represent the employee; or

(d) The United States, where the CFPB determines that litigation is likely to affect the CFPB or any of its components;

(8) A court, magistrate, or administrative tribunal in the course of an administrative proceeding or judicial proceeding, including disclosures to opposing counsel or witnesses (including expert witnesses) in the course of discovery or other pre-hearing exchanges of information, litigation, or settlement negotiations, where relevant or potentially relevant to a proceeding, or in connection with criminal law proceedings; and

(9) Appropriate federal, state, local, foreign, tribal, or self-regulatory organizations or agencies responsible for investigating, prosecuting, enforcing, implementing, issuing, or carrying out a statute, rule, regulation, order, policy, or license if the information may be relevant to a potential violation of civil or criminal law, rule, regulation, order, policy or license.

POLICIES AND PRACTICES FOR STORING, RETRIEVING, ACCESSING, RETAINING, AND DISPENSING OF RECORDS IN THE SYSTEM:

STORAGE:

Paper and electronic records.

RETRIEVABILITY:

Records are retrievable by full-text search. Records may also be retrieved by personal identifiers which may include without limitation: name, username, e-mail address, IP addresses, geographic information, and demographic information.

SAFEGUARDS:

Access to electronic records that are not otherwise available to the general public by virtue of their presence on social media sites is restricted to authorized personnel who have been issued non-transferrable access codes and passwords. Other records are maintained in locked file cabinets or rooms with access limited to those personnel whose official duties require access.

RETENTION AND DISPOSAL:

The CFPB will maintain computer and paper records indefinitely until the National Archives and Records Administration approves the CFPB's records deposition schedule.

SYSTEM MANAGER(S) AND ADDRESS:

Consumer Financial Protection Bureau, Chief Technology Officer, 1801 L Street, NW., Washington, DC 20036.

NOTIFICATION PROCEDURE:

Individuals seeking notification and access to any record contained in this system of records, or seeking to contest its content, may inquire in writing in accordance with instructions appearing in Title 12, Chapter 10 of the CFR, ''Disclosure of Records and Information.'' Address such requests to: Chief Privacy Officer, Bureau of Consumer Financial Protection, 1801 L St., NW., Washington, DC 20036.

RECORD ACCESS PROCEDURES:

See ''Notification Procedures'' above.

CONTESTING RECORD PROCEDURES:

See ''Notification Procedures'' above.

RECORD SOURCE CATEGORIES:

Information in this system is obtained from individuals who interact with the CFPB through social media networks or as a result of public outreach.

EXEMPTIONS CLAIMED FOR THE SYSTEM:

None.

[FR Doc. 2011–19426 Filed 7–29–11; 8:45 am]

BILLING CODE 4810–25–P

BUREAU OF CONSUMER FINANCIAL PROTECTION

Privacy Act of 1974, as Amended

AGENCY: Bureau of Consumer Financial Protection.

ACTION: Notice of Proposed Privacy Act System of Records.

SUMMARY: In accordance with the Privacy Act of 1974, as amended, the Bureau of Consumer Financial Protection, hereinto referred to as the Consumer Financial Protection Bureau (''CFPB'') or the ''Bureau'' gives notice of the establishment of a Privacy Act System of Records.

DATES: Comments must be received no later than August 31, 2011. The new system of records will be effective September 12, 2011 unless the comments received result in a contrary determination.

ADDRESSES: You may submit comments, identified by Docket No. CFPB–2011–0012, by any of the following methods:

- *Electronic: http://www.regulations.gov.* Follow the instructions for submitting comments.
- *Mail or Hand Delivery/Courier in Lieu of Mail:* Claire Stapleton, Chief Privacy Officer, Consumer Financial Protection Bureau, 1801 L Street, NW., Washington, DC 20036.

All submissions must include the agency name and docket number or Regulatory Information Number (RIN) for this notice. In general all comments received will be posted without change to *http://www.regulations.gov.* In addition, comments will be available for public inspection and copying at 1801 L St., NW., Washington, DC 20036, on official business days between the hours of 10 a.m. and 5 p.m. Eastern Time. You can make an appointment to inspect comments by telephoning (202) 435–7220. All comments, including attachments and other supporting materials, will become part of the public record and subject to public disclosure. You should submit only information that you wish to make available publicly.

FOR FURTHER INFORMATION CONTACT: Claire Stapleton, Chief Privacy Officer, Consumer Financial Protection Bureau, 1801 L Street, NW., Washington, DC 20036, (202) 435–7220.

SUPPLEMENTARY INFORMATION: The Dodd-Frank Wall Street Reform and Consumer Protection Act (''Act''), Public Law 111–203, Title X, established the CFPB to administer and enforce federal consumer financial protection law. The CFPB will maintain the records covered by this notice.

The new systems of records described in this notice, CFPB.003—Non-depository Supervision Database will be used to enable the CFPB to carry out its responsibilities with respect to individuals related to non-depository covered persons subject to the authority of the CFPB, including the internal coordination of examinations, supervision evaluations and analyses, and enforcement actions. This system will also allow the CFPB to coordinate with other financial regulatory agencies. A description of the new system of records follows this Notice.

The report of a new system of records has been submitted to the Committee on Oversight and Government Reform of the House of Representatives, the Committee on Homeland Security and Governmental Affairs of the Senate, and the Office of Management and Budget, pursuant to Appendix I to OMB Circular A–130, ''Federal Agency Responsibilities for Maintaining Records About Individuals,'' dated November 30, 2000, and the Privacy Act, 5 U.S.C. 552a(r).

The system of records entitled, ''CFPB.003—Non-depository Supervision Database'' is published in its entirety below.

Dated: July 27, 2011.

Claire Stapleton,

Chief Privacy Officer.

CFPB.003

SYSTEM NAME:

CFPB Non-depository Supervision Database.

SYSTEM LOCATION:

Consumer Financial Protection Bureau, 1801 L Street, NW., Washington, DC 20036.

CATEGORIES OF INDIVIDUALS COVERED BY THE SYSTEM:

Individuals covered by this system are: (1) Individuals who themselves are current and former directors, officers, employees, agents, shareholders, and independent contractors of non-depository covered persons subject to the supervision of the CFPB; (2) Current and former consumers who are or have been in the past serviced by non-depository covered persons subject to the supervision of the CFPB; and (3) CFPB employees assigned to supervise non-depository covered persons. Information collected regarding consumer products and services is subject to the Privacy Act only to the extent that it concerns individuals; information pertaining to corporations and other organizations is not subject to the Privacy Act.

CATEGORIES OF RECORDS IN THE SYSTEM:

Records in the system may contain information provided by a covered person, by individuals who are or have been serviced by a covered person, or other governmental authorities, to the CFPB in the exercise of the CFPB's responsibilities and used to assess a covered person's compliance with various statutory and regulatory obligations. This may include: (1) Personally identifiable information from customers of non-depository covered persons, including without limitation,

name, social security number, account numbers, address, phone number, email address, and date of birth; (2) contact information for officials of non-depository covered persons such as members of the Board of Directors, Audit Committee Chair, Chief Executive Officer, Chief Compliance Officer, Internal Auditor, and Independent Auditor including, without limitation, name, address, phone number and email address; (3) information about CFPB employees assigned supervision tasks for non-depository covered persons; and (4) confidential supervision information or personal information, including information relating to individuals that is derived from such information or from consumer complaints. This information may include, without limitation, reports of examinations and associated documentation regarding compliance with consumer financial law; documents assessing the current and past safety and soundness/risk management of a covered person or service provider; reports of consumer complaints; and correspondence relating to any category of information discussed above and actions taken to remedy deficiencies in these areas.

Information contained in the Non-depository Supervision Database is collected from a variety of sources, including, without limitation: (1) The individuals who own, control, or work for covered persons or service providers; (2) existing databases maintained by other federal and state regulatory associations, law enforcement agencies, and related entities; (3) third-parties with relevant information about covered persons or service providers; and (4) information generated by CFPB employees. Whenever practicable, the CFPB will collect information about an individual directly from that individual.

AUTHORITY FOR MAINTENANCE OF THE SYSTEM:

Public Law 111–203, Title X, Section 1011, 1012, 1021, 1024, codified at 12 U.S.C. 5491, 5492, 5511, 5514.[1]

PURPOSE(S):

The information in the system is being collected to enable the CFPB to carry out its responsibilities with respect to non-depository covered persons and service providers, including the coordination and conduct of examinations, supervisory evaluations and analyses, enforcement actions, actions in federal court, and coordination with other financial regulatory agencies. The information collected in this system will also support the conduct of investigations or could be used as evidence by the CFPB or other supervisory or law enforcement agencies. This may result in criminal referrals, referral to the Federal Reserve Office of the Inspector General, or the initiation of administrative or federal court actions. This system will track and store examination and inspection documents created during the performance of the CFPB's statutory duties. This system also will enable the CFPB to monitor and coordinate regular examinations and required reports, supervisory evaluations and analyses, and enforcement actions internally and with other federal and state regulators.

ROUTINE USES OF RECORDS MAINTAINED IN THE SYSTEM, INCLUDING CATEGORIES OF USERS AND THE PURPOSES OF SUCH USES:

These records may be disclosed, consistent with the CFPB Disclosure of Records and Information Rules promulgated in the title of the CFR to:

(1) Appropriate agencies, entities, and persons when: (a) the CFPB suspects or has confirmed that the security or confidentiality of information in the system of records has been compromised; (b) the CFPB has determined that, as a result of the suspected or confirmed compromise, there is a risk of harm to economic or property interests, identity theft or fraud, or harm to the security or integrity of this system or other systems or programs (whether maintained by the CFPB or another agency or entity) that rely upon the compromised information; and (c) the disclosure made to such agencies, entities, and persons is reasonably necessary to assist in connection with the CFPB's efforts to respond to the suspected or confirmed compromise and prevent, minimize, or remedy such harm;

(2) Another federal or state agency to: (a) permit a decision as to access, amendment or correction of records to be made in consultation with or by that agency; or (b) verify the identity of an individual or the accuracy of information submitted by an individual who has requested access to or amendment or correction of records;

(3) The Office of the President in response to an inquiry from that office made at the request of the subject of a record or a third party on that person's behalf;

(4) Congressional offices in response to an inquiry made at the request of the individual to whom the record pertains;

(5) Contractors, agents, or other authorized individuals performing work on a contract, service, cooperative agreement, job, or other activity on behalf of the CFPB or Federal Government and who have a need to access the information in the performance of their duties or activities;

(6) Any authorized agency or component of the Department of Treasury, the Department of Justice, the Federal Reserve System, the Federal Deposit Insurance Corporation or other law enforcement authorities including disclosure by such authorities:

(a) To the extent relevant and necessary in connection with litigation in proceedings before a court or other adjudicative body, where (i) the United States is a party to or has an interest in the litigation, including where the agency, or an agency component, or an agency official or employee in his or her official capacity, or an individual agency official or employee whom the Department of Justice or the Bureau has agreed to represent, is or may likely become a party, and (ii) the litigation is likely to affect the agency or any component thereof; or

(b) To outside experts or consultants when considered appropriate by CFPB staff to assist in the conduct of agency matters;

(7) The U.S. Department of Justice (''DOJ'') for its use in providing legal advice to the CFPB or in representing the CFPB in a proceeding before a court, adjudicative body, or other administrative body, where the use of such information by the DOJ is deemed by the CFPB to be relevant and necessary to the advice or proceeding, and in the case of a proceeding, such proceeding names as a party in interest:

(a) The CFPB;

(b) Any employee of the CFPB in his or her official capacity;

(c) Any employee of the CFPB in his or her individual capacity where DOJ or the CFPB has agreed to represent the employee; or

(d) The United States, where the CFPB determines that litigation is likely to affect the CFPB or any of its components;

(8) A grand jury pursuant either to a federal or state grand jury subpoena, or to a prosecution request that such record be released for the purpose of its introduction to a grand jury, where the subpoena or request has been specifically approved by a court. In those cases where the Federal Government is not a party to the proceeding, records may be disclosed if a subpoena has been signed by a judge;

(9) A court, magistrate, or administrative tribunal in the course of

[1] Section 1066 of the Act grants the Secretary of the Treasury interim authority to perform certain functions of the CFPB. Pursuant to that authority, Treasury published rules on the Disclosure of Records and Information within 12 CFR Chapter X. This SORN is published pursuant to those rules and the Privacy Act.

an administrative proceeding or judicial proceeding, including disclosures to opposing counsel or witnesses (including expert witnesses) in the course of discovery or other pre-hearing exchanges of information, litigation, or settlement negotiations, where relevant or potentially relevant to a proceeding, or in connection with criminal law proceedings;

(10) Appropriate agencies, entities, and persons, including but not limited to potential expert witnesses or witnesses in the course of investigations, to the extent necessary to secure information relevant to the investigation;

(11) Appropriate federal, state, local, foreign, tribal, or self-regulatory organizations or agencies responsible for investigating, prosecuting, enforcing, implementing, issuing, or carrying out a statute, rule, regulation, order, policy, or license if the information may be relevant to a potential violation of civil or criminal law, rule, regulation, order, policy or license; and

(12) An entity or person that is the subject of supervision or enforcement activities including examinations, investigations, administrative proceedings, and litigation, and the attorney or non-attorney representative for that entity or person.

POLICIES AND PRACTICES FOR STORING, RETRIEVING, ACCESSING, RETAINING, AND DISPENSING OF RECORDS IN THE SYSTEM:

STORAGE:

Paper and electronic records.

RETRIEVABILITY:

Records are retrievable by a variety of fields including, but not limited to, the individual's name, complaint/inquiry case number, address, account number, transaction number, phone number, date of birth, or by some combination thereof.

SAFEGUARDS:

Access to electronic records is restricted to authorized personnel who have been issued non-transferable access codes and passwords. Other records are maintained in locked file cabinets or rooms with access limited to those personnel whose official duties require access.

RETENTION AND DISPOSAL:

The CFPB will maintain computer and paper records indefinitely until the National Archives and Records Administration approves the CFPB's records disposition schedule.

SYSTEM MANAGER(S) AND ADDRESS:

Consumer Financial Protection Bureau, Assistant Director of Nonbank Supervision,1801 L Street, NW., Washington, DC 20036.

NOTIFICATION PROCEDURE:

Individuals seeking notification and access to any record contained in this system of records, or seeking to contest its content, may inquire in writing in accordance with instructions appearing in Title 12, Chapter 10 of the CFR, ''Disclosure of Records and Information.'' Address such requests to: Chief Privacy Officer, Bureau of Consumer Financial Protection, 1801 L St., NW., Washington, DC 20036.

RECORD ACCESS PROCEDURES:

See ''Notification Procedures'' above.

CONTESTING RECORD PROCEDURES:

See ''Notification Procedures'' above.

RECORD SOURCE CATEGORIES:

Information in this system is obtained from covered persons subject to the CFPB's authority, and current, former, and prospective consumers who are or have been customers or prospective customers of covered persons, and others with information relevant to the enforcement of federal consumer financial laws.

EXEMPTIONS CLAIMED FOR THE SYSTEM:

Portions of the records in this system are complied for law enforcement purposes and are exempt from disclosure under the CFPB's Privacy Act regulations and 5 U.S.C. 552a(k)(2). Federal criminal law enforcement investigatory reports maintained as part of this system may be the subject of exemptions imposed by the originating agency pursuant to 5 U.S.C. 552a(j)(2).

[FR Doc. 2011–19427 Filed 7–29–11; 8:45 am]

BILLING CODE 4810–25–P

BUREAU OF CONSUMER FINANCIAL PROTECTION

Privacy Act of 1974, as Amended

AGENCY: Bureau of Consumer Financial Protection.

ACTION: Notice of Proposed Privacy Act System of Records.

SUMMARY: In accordance with the Privacy Act of 1974, as amended, the Bureau of Consumer Financial Protection, hereinto referred to as the Consumer Financial Protection Bureau (''CFPB'') or the ''Bureau'' gives notice of the establishment of a Privacy Act System of Records.

DATES: Comments must be received no later than August 31, 2011. The new system of records will be effective September 12, 2011 unless the comments received result in a contrary determination.

ADDRESSES: You may submit comments, identified by Docket No. CFPB–2011–0015, by any of the following methods:

- *Electronic: http://www.regulations.gov.* Follow the instructions for submitting comments.
- *Mail or Hand Delivery/Courier in Lieu of Mail:* Claire Stapleton, Chief Privacy Officer, Consumer Financial Protection Bureau, 1801 L Street, NW., Washington, DC 20036.

All submissions must include the agency name and docket number or Regulatory Information Number (RIN) for this notice. In general all comments received will be posted without change to *http://www.regulations.gov.* In addition, comments will be available for public inspection and copying at 1801 L St., NW., Washington, DC 20036, on official business days between the hours of 10 a.m. and 5 p.m. Eastern Time. You can make an appointment to inspect comments by telephoning (202) 435–7220. All comments, including attachments and other supporting materials, will become part of the public record and subject to public disclosure. You should submit only information that you wish to make available publicly.

FOR FURTHER INFORMATION CONTACT: Claire Stapleton, Chief Privacy Officer Consumer Financial Protection Bureau, 1801 L Street, NW., Washington, DC 20036, (202) 435–7220.

SUPPLEMENTARY INFORMATION: The Dodd-Frank Wall Street Reform and Consumer Protection Act (''Act''), Public Law No. 111–203, Title X, established the CFPB to administer and enforce Federal consumer financial protection law. The CFPB will maintain the records covered by this notice.

The new system of records described in this notice, CFPB.007—Directory Database, will provide the CFPB with a single, agency-wide repository of identifying and registration information concerning entities offering or providing, or materially assisting in the offering or provision of, consumer financial products or services. By ensuring the use of consistent information across the agency, the Directory Database will enable the CFPB to carry out its supervisory, enforcement, and regulatory authorities in an efficient and effective manner. A description of the new system of records follows this Notice.

The report of a new system of records has been submitted to the Committee on Oversight and Government Reform of the House of Representatives, the Committee on Homeland Security and

Governmental Affairs of the Senate, and the Office of Management and Budget, pursuant to Appendix I to OMB Circular A–130, ''Federal Agency Responsibilities for Maintaining Records About Individuals,'' dated November 30, 2000, and the Privacy Act, 5 U.S.C. 552a(r).

The system of records entitled, ''CFPB.007—Directory Database'' is published in its entirety below.

Dated: July 27, 2011.

Claire Stapleton,

Chief Privacy Officer.

CFPB.007

SYSTEM NAME:

CFPB Directory Database.

SYSTEM LOCATION:

Consumer Financial Protection Bureau, 1801 L Street, NW., Washington, DC 20036.

CATEGORIES OF INDIVIDUALS COVERED BY THE SYSTEM:

Individuals covered by this system are: (1) Individuals who directly, indirectly, or acting through or concert with one or more other individuals, own or control an entity offering or providing, or materially assisting in the offering or provision of, consumer financial products or services (collectively, ''covered persons'' and ''service providers''); (2) current and former directors, officers, employees, shareholders, agents, and independent contractors of such entities; (3) other related persons, as necessary, including without limitation, persons who have personal financial arrangements with covered persons, representatives or counsel of covered persons or related persons; and (4) individuals who provide information on covered persons or entities such as employees of state attorneys general offices. Information contained in the Directory Database is subject to the Privacy Act only to the extent that it concerns individuals; information pertaining to corporations and other business entities and aggregate, non-identifiable information is not subject to the Privacy Act.

CATEGORIES OF RECORDS IN THE SYSTEM:

Records maintained in this system may contain, without limitation, the following types of personally identifiable information: name, address, e-mail address, phone number, social security number, alien registration number, passport number, driver's license or state identification number, or other unique number used to establish identity of the owner or controlling person, employment status, age, gender, ethnicity, and date of birth. Additionally, records may contain information relating to the business activities and transactions of covered persons and entities and their associated persons. Other information may include without limitation: name, location, charter number, charter type, and date of last examination of each entity and the types of financial products offered by each organization.

Information contained in the Directory Database will be collected from a variety of sources, including, without limitation: (1) The individuals who own, control, or work for covered persons or service providers; (2) existing databases maintained by other Federal and state regulatory associations, agencies, and related entities; (3) third-parties with relevant information about covered persons or services providers; and (4) information generated by CFPB employees. Whenever practicable, the CFPB will collect information about an individual directly from that individual.

AUTHORITY FOR MAINTENANCE OF THE SYSTEM:

Pub. L. No. 111–203, Title X, Sections 1011, 1012, 1021, codified at 12 U.S.C. 5491, 5492, 5511.[1]

PURPOSE(S):

The information in the system is being collected to create an agency-wide repository of identifying and registration information concerning entities and their affiliates offering or providing, or materially assisting in the offering or provision of, consumer financial products or services. By ensuring the use of consistent information across the agency, the Directory Database will enable the CFPB to carry out its supervisory, enforcement, and regulatory authorities in an efficient and effective manner.

ROUTINE USES OF RECORDS MAINTAINED IN THE SYSTEM, INCLUDING CATEGORIES OF USERS AND THE PURPOSES OF SUCH USES:

These records may be disclosed, consistent with the CFPB Disclosure of Records and Information Rules promulgated in the title of the CFR to:

(1) Appropriate agencies, entities, and persons when: (a) The CFPB suspects or has confirmed that the security or confidentiality of information in the system of records has been compromised; (b) the CFPB has determined that, as a result of the suspected or confirmed compromise, there is a risk of harm to economic or property interests, identity theft or fraud, or harm to the security or integrity of this system or other systems or programs (whether maintained by the CFPB or another agency or entity) that rely upon the compromised information; and (c) the disclosure made to such agencies, entities, and persons is reasonably necessary to assist in connection with the CFPB's efforts to respond to the suspected or confirmed compromise and prevent, minimize, or remedy such harm;

(2) Another Federal or state agency to: (a) Permit a decision as to access, amendment or correction of records to be made in consultation with or by that agency; or (b) verify the identity of an individual or the accuracy of information submitted by an individual who has requested access to, or amendment or correction of records;

(3) The Office of the President in response to an inquiry from that office made at the request of the subject of a record or a third party on that person's behalf;

(4) Congressional offices in response to an inquiry made at the request of the individual to whom the record pertains;

(5) Contractors, agents, or other authorized individuals performing work on a contract, service, cooperative agreement, job, or other activity on behalf of the CFPB or Federal Government and who have a need to access the information in the performance of their duties or activities;

(6) Any authorized agency or component of the Department of Treasury, the Department of Justice, the Federal Reserve System, the Federal Deposit Insurance Corporation or other law enforcement authorities including disclosure by such authorities:

(a) To the extent relevant and necessary in connection with litigation in proceedings before a court or other adjudicative body, where (i) the United States is a party to or has an interest in the litigation, including where the agency, or an agency component, or an agency official or employee in his or her official capacity, or an individual agency official or employee whom the Department of Justice or the Bureau has agreed to represent, is or may likely become a party, and (ii) the litigation is likely to affect the agency or any component thereof; or

(b) To outside experts or consultants when considered appropriate by CFPB staff to assist in the conduct of agency matters;

(7) The U.S. Department of Justice (''DOJ'') for its use in providing legal advice to the CFPB or in representing the CFPB in a proceeding before a court,

[1] Section 1066 of the Act grants the Secretary of the Treasury interim authority to perform certain functions of the CFPB. Pursuant to that authority, Treasury published rules on the Disclosure of Records and Information within 12 CFR Chapter X. This SORN is published pursuant to those rules and the Privacy Act.

adjudicative body, or other administrative body, where the use of such information by the DOJ is deemed by the CFPB to be relevant and necessary to the advice or proceeding, and in the case of a proceeding, such proceeding names as a party in interest:

(a) The CFPB;

(b) Any employee of the CFPB in his or her official capacity;

(c) Any employee of the CFPB in his or her individual capacity where DOJ or the CFPB has agreed to represent the employee; or

(d) The United States, where the CFPB determines that litigation is likely to affect the CFPB or any of its components;

(8) A court, magistrate, or administrative tribunal in the course of an administrative proceeding or judicial proceeding, including disclosures to opposing counsel or witnesses (including expert witnesses) in the course of discovery or other pre-hearing exchanges of information, litigation, or settlement negotiations, where relevant or potentially relevant to a proceeding, or in connection with criminal law proceedings;

(9) Appropriate agencies, entities, and persons, including but not limited to potential expert witnesses or witnesses in the course of investigations, to the extent necessary to secure information relevant to the investigation; and

(10) Appropriate Federal, state, local, foreign, tribal, or self-regulatory organizations or agencies responsible for investigating, prosecuting, enforcing, implementing, issuing, or carrying out a statute, rule, regulation, order, policy, or license if the information may be relevant to a potential violation of civil or criminal law, rule, regulation, order, policy or license.

POLICIES AND PRACTICES FOR STORING, RETRIEVING, ACCESSING, RETAINING, AND DISPENSING OF RECORDS IN THE SYSTEM:

STORAGE:

Paper and electronic records.

RETRIEVABILITY:

Records are retrievable by a variety of fields including without limitation the individual's name, social security number, passport number, driver's license or state identification number, or other unique number used to establish identity of the owner or controlling person, address, account number, phone number, or by some combination thereof.

SAFEGUARDS:

Access to electronic records is restricted to authorized personnel who have been issued non-transferrable access codes and passwords. Other records are maintained in locked file cabinets or rooms with access limited to those personnel whose official duties require access.

RETENTION AND DISPOSAL:

The CFPB will maintain computer and paper records indefinitely until the National Archives and Records Administration approves the CFPB's records disposition schedule.

SYSTEM MANAGER(S) AND ADDRESS:

Consumer Financial Protection Bureau, Chief Technology Officer, 1801 L Street, NW., Washington, DC 20036.

NOTIFICATION PROCEDURE:

Individuals seeking notification and access to any record contained in this system of records, or seeking to contest its content, may inquire in writing in accordance with instructions appearing in Title 12, Chapter 10 of the CFR, ''Disclosure of Records and Information.'' Address such requests to: Chief Privacy Officer, Bureau of Consumer Financial Protection, 1801 L St., NW., Washington, DC 20036.

RECORD ACCESS PROCEDURES:

See ''Notification Procedures'' above.

CONTESTING RECORD PROCEDURES:

See ''Notification Procedures'' above.

RECORD SOURCE CATEGORIES:

Information in this system is obtained from entities offering or providing consumer financial products or services.

EXEMPTIONS CLAIMED FOR THE SYSTEM:

None.

[FR Doc. 2011–19425 Filed 7–29–11; 8:45 am]

BILLING CODE 4810–25–P

BUREAU OF CONSUMER FINANCIAL PROTECTION

Privacy Act of 1974, as Amended

AGENCY: Bureau of Consumer Financial Protection.

ACTION: Notice of Proposed Privacy Act System of Records.

SUMMARY: In accordance with the Privacy Act of 1974, as amended, the Bureau of Consumer Financial Protection, hereinto referred to as the Consumer Financial Protection Bureau (''CFPB'') or the ''Bureau'' gives notice of the establishment of a Privacy Act System of Records.

DATES: Comments must be received no later than August 31, 2011. The new system of records will be effective September 12, 2011 unless the comments received result in a contrary determination.

ADDRESSES: You may submit comments, identified by Docket No. CFPB–2011–0011, by any of the following methods:

- *Electronic: http://www.regulations.gov.* Follow the instructions for submitting comments.
- *Mail or Hand Delivery/Courier in Lieu of Mail:* Claire Stapleton, Chief Privacy Officer, Consumer Financial Protection Bureau, 1801 L Street, NW., Washington, DC 20036. All submissions must include the agency name and docket number or Regulatory Information Number (RIN) for this notice. In general all comments received will be posted without change to *http://www.regulations.gov.* In addition, comments will be available for public inspection and copying at 1801 L St., NW., Washington, DC 20036, on official business days between the hours of 10 a.m. and 5 p.m. Eastern Time. You can make an appointment to inspect comments by telephoning (202) 435–7220. All comments, including attachments and other supporting materials, will become part of the public record and subject to public disclosure. You should submit only information that you wish to make available publicly.

FOR FURTHER INFORMATION CONTACT: Claire Stapleton, Chief Privacy Officer, Consumer Financial Protection Bureau, 1801 L Street, NW., Washington, DC 20036, (202) 435–7220.

SUPPLEMENTARY INFORMATION: The Dodd-Frank Wall Street Reform and Consumer Protection Act (''Act''), Public Law No. 111–203, Title X, established the CFPB to administer and enforce Federal consumer financial protection law. The CFPB will maintain the records covered by this notice.

The new system of records described in this notice, CFPB.002—Depository Institution Supervision Database, will be used to enable the CFPB to carry out its responsibilities with respect to certain banks, savings associations, credit unions, and their affiliates and service providers, including the coordination and conduct of examinations, supervisory evaluations and analyses, and enforcement actions. The system will also allow the CFPB to coordinate with other financial regulatory agencies. A description of the new system of records follows this Notice.

The report of a new system of records has been submitted to the Committee on Oversight and Government Reform of the House of Representatives, the Committee on Homeland Security and Governmental Affairs of the Senate, and

the Office of Management and Budget, pursuant to Appendix I to OMB Circular A–130, ''Federal Agency Responsibilities for Maintaining Records About Individuals,'' dated November 30, 2000, and the Privacy Act, 5 U.S.C. 552a(r).

The system of records entitled, ''CFPB.002—Depository Institution Supervision Database'' is published in its entirety below.

Dated: July 27, 2011.

Claire Stapleton,

Chief Privacy Officer.

CFPB.002

SYSTEM NAME:

CFPB Depository Institution Supervision Database.

SYSTEM LOCATION:

Consumer Financial Protection Bureau, 1801 L Street, NW., Washington, DC 20036.

CATEGORIES OF INDIVIDUALS COVERED BY THE SYSTEM:

Individuals covered by this system are: (1) Individuals who themselves are, and current and former directors, officers, employees, agents, shareholders, and independent contractors of banks, savings associations, or credit unions; (2) Current and former consumers who are or have been in the past serviced by banks, savings associations, or credit unions subject to the supervision of the CFPB; and (3) CFPB employees assigned to supervise banks, savings associations, or credit unions. Information collected regarding consumer products and services is subject to the Privacy Act only to the extent that it concerns individuals; information pertaining to corporations and other business entities is not subject to the Privacy Act.

CATEGORIES OF RECORDS IN THE SYSTEM:

Records in the system may contain information provided by a supervised institution, by individuals who are or have been serviced by a supervised institution, or other government authorities, to the CFPB in the exercise of CFPB's responsibilities and used to assess an institution's compliance with various statutory and regulatory obligations. This may include: (1) Personally identifiable information from customers of banks, savings associations, or credit unions, including without limitation, name, account numbers, address, phone number, e-mail address, and date of birth; (2) contact information of officials of institutions such as members of the Board of Directors, Audit Committee Chair, Chief Executive Officer, Chief Compliance Officer, Internal Auditor, and Independent Auditor including, without limitation, name, address, phone number and e-mail address; (3) information about CFPB employees assigned to depository institution supervision tasks, including, without limitation, name, phone number, e-mail address, address, and other employment information; and (4) Confidential Supervision Information or Personal Information, including information relating to individuals that is derived from Confidential Supervisory Information or from consumer complaints. This information may include, without limitation, reports of examinations and associated documentation regarding compliance with consumer financial protection laws; documents assessing the current and past safety and soundness/risk management of a covered person or service provider; reports of consumer complaints; and correspondence relating to any category of information discussed above and actions taken to remedy deficiencies in these areas.

Information contained in the Depository Institution Supervision Database is collected from a variety of sources, including, without limitation: (1) The individuals who own, control, or work for covered persons or service providers; (2) existing databases maintained by other Federal and state regulatory associations, law enforcement agencies, and related entities; (3) third parties with relevant information about covered persons or services providers; and (4) information generated by CFPB employees or about CFPB employees assigned supervisory tasks. Whenever practicable, the CFPB will collect information about an individual directly from that individual.

AUTHORITY FOR MAINTENANCE OF THE SYSTEM:

Public Law 111–203, Title X, Section 1011, 1012, 1021, 1025, codified at 12 U.S.C. 5491, 5492, 5511, 5515.[1]

PURPOSE(S):

The information in the system is being collected to enable the CFPB to carry out its responsibilities with respect to banks, savings associations, credit unions, and their affiliates and service providers, including the coordination and conduct of examinations, supervisory evaluations and analyses, enforcement actions, actions in Federal court, and coordination with other financial regulatory agencies. The information collected in this system will also support the conduct of investigations or be used as evidence by the CFPB or other supervisory or law enforcement agencies. This may result in criminal referrals, referral to the Federal Reserve Office of Inspector General, or the initiation of administrative or Federal court actions. This system will track and store examination and inspection documents created during the performance of the CFPB's statutory duties. This system also will enable the CFPB to monitor and coordinate regular examinations and required reports, supervisory evaluations and analyses, and enforcement actions internally and with other Federal and state regulators.

ROUTINE USES OF RECORDS MAINTAINED IN THE SYSTEM, INCLUDING CATEGORIES OF USERS AND THE PURPOSES OF SUCH USES:

These records may be disclosed, consistent with the CFPB Disclosure of Records and Information Rules promulgated in the title of the CFR to:

(1) Appropriate agencies, entities, and persons when: (a) The CFPB suspects or has confirmed that the security or confidentiality of information in the system of records has been compromised; (b) the CFPB has determined that, as a result of the suspected or confirmed compromise, there is a risk of harm to economic or property interests, identity theft or fraud, or harm to the security or integrity of this system or other systems or programs (whether maintained by the CFPB or another agency or entity) that rely upon the compromised information; and (c) the disclosure made to such agencies, entities, and persons is reasonably necessary to assist in connection with the CFPB's efforts to respond to the suspected or confirmed compromise and prevent, minimize, or remedy such harm;

(2) Another Federal or state agency to: (a) Permit a decision as to access, amendment or correction of records to be made in consultation with or by that agency; or (b) verify the identity of an individual or the accuracy of information submitted by an individual who has requested access to, or amendment or correction of records;

(3) The Office of the President in response to an inquiry from that office made at the request of the subject of a record or a third party on that person's behalf;

(4) Congressional offices in response to an inquiry made at the request of the individual to whom the record pertains;

[1] Section 1066 of the Act grants the Secretary of the Treasury interim authority to perform certain functions of the CFPB. Pursuant to that authority, Treasury published rules on the Disclosure of Records and Information within 12 CFR Chapter X. This SORN is published pursuant to those rules and the Privacy Act.

(5) Contractors, agents, or other authorized individuals performing work on a contract, service, cooperative agreement, job, or other activity on behalf of the CFPB or Federal Government and who have a need to access the information in the performance of their duties or activities;

(6) Any authorized agency or component of the Department of Treasury, the Department of Justice, the Federal Reserve System, the Federal Deposit Insurance Corporation or other law enforcement authorities including disclosure by such authorities:

(a) To the extent relevant and necessary in connection with litigation in proceedings before a court or other adjudicative body, where (i) The United States is a party to or has an interest in the litigation, including where the agency, or an agency component, or an agency official or employee in his or her official capacity, or an individual agency official or employee whom the Department of Justice or the Bureau has agreed to represent, is or may likely become a party, and (ii) the litigation is likely to affect the agency or any component thereof; or

(b) To outside experts or consultants when considered appropriate by CFPB staff to assist in the conduct of agency matters;

(7) The U.S. Department of Justice (''DOJ'') for its use in providing legal advice to the CFPB or in representing the CFPB in a proceeding before a court, adjudicative body, or other administrative body, where the use of such information by the DOJ is deemed by the CFPB to be relevant and necessary to the advice or proceeding, and in the case of a proceeding, such proceeding names as a party in interest:

(a) The CFPB;

(b) Any employee of the CFPB in his or her official capacity;

(c) Any employee of the CFPB in his or her individual capacity where DOJ or the CFPB has agreed to represent the employee; or

(d) The United States, where the CFPB determines that litigation is likely to affect the CFPB or any of its components;

(8) A grand jury pursuant either to a Federal or state grand jury subpoena, or to a prosecution request that such record be released for the purpose of its introduction to a grand jury, where the subpoena or request has been specifically approved by a court. In those cases where the Federal Government is not a party to the proceeding, records may be disclosed if a subpoena has been signed by a judge;

(9) A court, magistrate, or administrative tribunal in the course of an administrative proceeding or judicial proceeding, including disclosures to opposing counsel or witnesses (including expert witnesses) in the course of discovery or other pre-hearing exchanges of information, litigation, or settlement negotiations, where relevant or potentially relevant to a proceeding, or in connection with criminal law proceedings;

(10) Appropriate agencies, entities, and persons, including but not limited to potential expert witnesses or witnesses in the course of investigations, to the extent necessary to secure information relevant to the investigation;

(11) Appropriate Federal, state, local, foreign, tribal, or self-regulatory organizations or agencies responsible for investigating, prosecuting, enforcing, implementing, issuing, or carrying out a statute, rule, regulation, order, policy, or license if the information may be relevant to a potential violation of civil or criminal law, rule, regulation, order, policy or license; and

(12) An entity or person that is the subject of supervision or enforcement activities including examinations, investigations, administrative proceedings, and litigation, and the attorney or non-attorney representative for that entity or person.

POLICIES AND PRACTICES FOR STORING, RETRIEVING, ACCESSING, RETAINING, AND DISPENSING OF RECORDS IN THE SYSTEM:

STORAGE:

Paper and electronic records.

RETRIEVABILITY:

Records are retrievable by a variety of fields including without limitation the individual's name, complaint/inquiry case number, address, account number, transaction number, phone number, date of birth, or by some combination thereof.

SAFEGUARDS:

Access to electronic records is restricted to authorized personnel who have been issued non-transferrable access codes and passwords. Other records are maintained in locked file cabinets or rooms with access limited to those personnel whose official duties require access.

RETENTION AND DISPOSAL:

The CFPB will maintain computer and paper records indefinitely until the National Archives and Records Administration approves the CFPB's records disposition schedule.

SYSTEM MANAGER(S) AND ADDRESS:

Consumer Financial Protection Bureau, Assistant Director of Large Bank Supervision, 1801 L Street, NW., Washington, DC 20036.

NOTIFICATION PROCEDURE:

Individuals seeking notification and access to any record contained in this system of records, or seeking to contest its content, may inquire in writing in accordance with instructions appearing in Title 12, Chapter 10 of the CFR, ''Disclosure of Records and Information.'' Address such requests to: Chief Privacy Officer, Bureau of Consumer Financial Protection, 1801 L St., NW., Washington, DC 20036.

RECORD ACCESS PROCEDURES:

See ''Notification Procedures'' above.

CONTESTING RECORD PROCEDURES:

See ''Notification Procedures'' above.

RECORD SOURCE CATEGORIES:

Information in this system is obtained from banks, savings associations, credit unions, and their affiliates and service providers, persons subject to the CFPB's authority, and current, former, and prospective consumers who are or have been customers or prospective customers of covered persons, and others with information relevant to the enforcement of Federal consumer financial laws.

EXEMPTIONS CLAIMED FOR THE SYSTEM:

Portions of the records in this system are complied for law enforcement purposes and are exempt from disclosure under CFPB's Privacy Act regulations and 5 U.S.C. 552a(k)(2). Federal criminal law enforcement investigatory reports maintained as part of this system may be the subject of exemptions imposed by the originating agency pursuant to 5 U.S.C. 552a(j)(2).

[FR Doc. 2011–19428 Filed 7–29–11; 8:45 am]

BILLING CODE 4810–25–P

BUREAU OF CONSUMER FINANCIAL PROTECTION

Privacy Act of 1974, as Amended

AGENCY: Bureau of Consumer Financial Protection.

ACTION: Notice of Proposed Privacy Act System of Records.

SUMMARY: In accordance with the Privacy Act of 1974, as amended, the Bureau of Consumer Financial Protection, hereinto referred to as the Consumer Financial Protection Bureau (''CFPB'') gives notice of the establishment of a Privacy Act System of Records.

DATES: Comments must be received no later than August 31, 2011. The new

database will be effective September 12, 2011, unless the comments received result in a contrary determination.

ADDRESSES: You may submit comments, identified by Docket No. CFPB–2011–0010, by any of the following methods:

• *Electronic: http://www.regulations.gov.* Follow the instructions for submitting comments.

• *Mail or Hand Delivery/Courier in Lieu of Mail:* Claire Stapleton, Chief Privacy Officer, Consumer Financial Protection Bureau, 1801 L Street, NW., Washington, DC 20036.

All submissions must include the agency name and docket number or Regulatory Information Number (RIN) for this notice. In general all comments received will be posted without change to *http://www.regulations.gov.* In addition, comments will be available for public inspection and copying at 1801 L St., NW., Washington, DC 20036, on official business days between the hours of 10 a.m. and 5 p.m. Eastern Time. You can make an appointment to inspect comments by telephoning (202) 435–7220. All comments, including attachments and other supporting materials, will become part of the public record and subject to public disclosure. You should submit only information that you wish to make available publicly.

FOR FURTHER INFORMATION CONTACT: Claire Stapleton, Chief Privacy Officer, Consumer Financial Protection Bureau, 1801 L Street, NW., Washington, DC 20036, (202) 435–7220.

SUPPLEMENTARY INFORMATION: The Dodd-Frank Wall Street Reform and Consumer Protection Act (''Act''), Public Law No. 111–203, Title X, established the CFPB to administer and enforce Federal consumer financial protection law. The CFPB will maintain the records covered by this notice.

The new system of records described in this notice, CFPB.001—Freedom of Information Act (''FOIA'')/Privacy Act (''PA'') System will be used by the CFPB to collect, process, log, track, and respond to all FOIA and/or PA related requests. It will be used to appropriately document information about the requestors' and/or entities' requests and the CFPB staff assigned to process, consider, and respond to the requests. The system will serve as the central repository for submitted requests for access to, correction of, and/or amendment to CFPB records. It will document the accounting of disclosures of records under FOIA and/or PA to include the status of requested records; responses to the requests; process responsive records; process FOIA-related calculations and fees; and proactively address frequently-requested records publicly available under the CFPB rules of practice and FOIA/PA requirements. It will also be used to maintain records, document the consideration and disposition of these requests for annual reporting, statistical analysis, fee management, and recordkeeping purposes. A description of the new system of records follows this Notice.

The report of the new system of records has been submitted to the Committee on Oversight and Government Reform of the House of Representatives, the Committee on Homeland Security and Governmental Affairs of the Senate, and the Office of Management and Budget, pursuant to Appendix I to OMB Circular A–130, ''Federal Agency Responsibilities for Maintaining Records About Individuals,'' dated November 30, 2000, and the Privacy Act, 5 U.S.C. 552a(r).

Dated: July 27, 2011.

Claire Stapleton,

Chief Privacy Officer.

CFPB.001

SYSTEM NAME:

CFPB Freedom of Information Act/Privacy Act System.

SYSTEM LOCATION:

Consumer Financial Protection Bureau, 1801 L Street, NW., Washington, DC 20036.

CATEGORIES OF INDIVIDUALS COVERED BY THE SYSTEM:

Individuals covered by this system are persons who cite the Freedom of Information Act or Privacy Act to request access to records or whose information requests are treated as FOIA requests. Other individuals covered include CFPB staff assigned to process such requests, and employees who may have responsive records or are mentioned in such records. FOIA requests are subject to the PA only to the extent that they concern individuals; information pertaining to corporations and other business entities and organizations are not subject to the PA.

CATEGORIES OF RECORDS IN THE SYSTEM:

Records in the system may contain: (1) Correspondence with the requester including initial requests and appeals; (2) documents generated or compiled during the search and processing of the request; (3) fee schedules, cost calculations, and accessed cost for disclosed FOIA records; (4) documents and memoranda supporting the decision made in response to the request, referrals, and copies of records provided or withheld; (5) CFPB staff assigned to process, consider, and respond to requests and, where a request has been referred to another agency with equities in a responsive document, information about the individual handling the request on behalf of that agency; (6) information identifying the entity that is subject to the requests or appeals; (7) requester information, including name, address, phone number, email address; FOIA tracking number, phone number, fax number, or some combination thereof; and (8) for access requests under the Privacy Act, identifying information regarding both the party who is making the written request or appeal, and the individual on whose behalf such written requests or appeals are made, including name, social security number (SSNs may be submitted with documentation or as proof of identification), address, phone number, email address, FOIA number, phone number, fax number, or some combination thereof.

AUTHORITY FOR MAINTENANCE OF THE SYSTEM:

Pub. L. 111–203, Title X, Sections 1011, 1012, 1021, codified at 12 U.S.C. 5491, 5492, 5511; The Freedom of Information Act of 1996, as amended 5 U.S.C. 552; Privacy Act of 1974, as amended 5 U.S.C. 552a.[1]

PURPOSE:

The information in the system is being collected to enable the CFPB to carry out its responsibilities under the FOIA and the PA, including enabling staff to receive, track, and respond to requests. This requires maintaining documentation gathered during the consideration and disposition process, administering annual reporting requirements, managing FOIA-related fees and calculations, and delivering responsive records.

ROUTINE USES OF RECORDS MAINTAINED IN THE SYSTEM, INCLUDING CATEGORIES OF USERS AND THE PURPOSES OF SUCH USES:

These records may be disclosed, consistent with the CFPB Disclosure of Records and Information Rules promulgated in the title of the CFR to:

(1) Appropriate agencies, entities, and persons when: (a) The CFPB suspects or has confirmed that the security or confidentiality of information in the system of records has been compromised; (b) the CFPB has determined that, as a result of the

[1] Section 1066 of the Act grants the Secretary of the Treasury interim authority to perform certain functions of the CFPB. Pursuant to that authority, Treasury published rules on the Disclosure of Records and Information within 12 CFR Chapter X. This SORN is published pursuant to those rules and the Privacy Act.

suspected or confirmed compromise, there is a risk of harm to economic or property interests, identity theft or fraud, or harm to the security or integrity of this system or other systems or programs (whether maintained by the CFPB or another agency or entity) that rely upon the compromised information; and (c) the disclosure made to such agencies, entities, and persons is reasonably necessary to assist in connection with the CFPB's efforts to respond to the suspected or confirmed compromise and prevent, minimize, or remedy such harm;

(2) Another Federal or state agency to: (a) Permit a decision as to access, amendment, or correction of records to be made in consultation with or by that agency; or (b) verify the identity of an individual or the accuracy of information submitted by an individual who has requested access to or amendment or correction of records;

(3) To the Office of the President in response to an inquiry from that office made at the request of the subject of a record or a third party on that person's behalf;

(4) Congressional offices in response to an inquiry made at the request of the individual to whom the record pertains;

(5) Contractors, agents, or other authorized individuals performing work on a contract, service, cooperative agreement, job, or other activity on behalf of the CFPB or Federal Government and who have a need to access the information in the performance of their duties or activities;

(6) Any authorized agency or component of the Department of Treasury, the Department of Justice, the Federal Reserve System, the Federal Deposit Insurance Corporation or other law enforcement authorities including disclosure by such authorities:

(a) To the extent relevant and necessary in connection with litigation in proceedings before a court or other adjudicative body, where (i) The United States is a party to or has an interest in the litigation, including where the agency, or an agency component, or an agency official or employee in his or her official capacity, or an individual agency official or employee whom the Department of Justice or the Bureau has agreed to represent, is or may likely become a party, and (ii) the litigation is likely to affect the agency or any component thereof; or

(b) To outside experts or consultants when considered appropriate by CFPB staff to assist in the conduct of agency matters;

(7) The U.S. Department of Justice (''DOJ'') for its use in providing legal advice to the CFPB or in representing the CFPB in a proceeding before a court, adjudicative body, or other administrative body, where the use of such information by the DOJ is deemed by the CFPB to be relevant and necessary to the advice or proceeding, and in the case of a proceeding, such proceeding names as a party in interest:

(a) The CFPB;

(b) Any employee of the CFPB in his or her official capacity;

(c) Any employee of the CFPB in his or her individual capacity where DOJ or the CFPB has agreed to represent the employee; or

(d) The United States, where the CFPB determines that litigation is likely to affect the CFPB or any of its components;

(8) A court, magistrate, or administrative tribunal in the course of an administrative proceeding or judicial proceeding, including disclosures to opposing counsel or witnesses (including expert witnesses) in the course of discovery or other pre-hearing exchanges of information, litigation, or settlement negotiations, where relevant or potentially relevant to a proceeding, or in connection with criminal law proceedings; and

(9) Appropriate agencies, entities, and persons, including but not limited to potential expert witnesses or witnesses in the course of investigations, to the extent necessary to secure information relevant to the investigation.

POLICIES AND PRACTICES FOR STORING, RETRIEVING, ACCESSING, RETAINING, AND DISPENSING OF RECORDS IN THE SYSTEM:

STORAGE:

Paper and electronic records.

RETRIEVABILITY:

Records are retrievable by a variety of fields including, but not limited to, the requester's name, the subject matter of request, requestor's organization, FOIA tracking number, and staff member assigned to process the request. Records may also be searched by the address, phone number, fax number, e-mail address of the requesting party, and subject matter of the request, or by some combination thereof.

SAFEGUARDS:

Access to electronic records is restricted to authorized personnel who have been issued non-transferrable access codes and passwords. Other records are maintained in locked file cabinets or rooms with access limited to those personnel whose official duties require access.

RETENTION AND DISPOSAL:

Computer and paper records will be maintained in accordance with published National Archives and Records Administration Disposition Schedule, Transmittal No. 22, General Records Schedule 14, Information Service Records.

SYSTEM MANAGER(S) AND ADDRESS:

Consumer Financial Protection Bureau, Chief FOIA Officer, 1801 L Street, NW., Washington, DC 20036.

NOTIFICATION PROCEDURE:

Individuals seeking notification and access to any record contained in this system of records, or seeking to contest its content, may inquire in writing in accordance with instructions appearing in Title 12, Chapter 10 of the CFR, ''Disclosure of Records and Information.'' Address such requests to: Chief Privacy Officer, Bureau of Consumer Financial Protection, 1801 L St., NW., Washington, DC 20036.

RECORD ACCESS PROCEDURES:

See ''Notification Procedure'' above.

CONTESTING RECORD PROCEDURES:

See ''Notification Procedure'' above.

RECORD SOURCE CATEGORIES:

Information in this system covers individuals about whom records are maintained; agency staff assigned to help process, consider, and respond to the request, including any appeals; entities filing requests or appeals on behalf of the requestor; other governmental authorities; and entities that are the subjects of the request or appeals.

EXEMPTIONS CLAIMED FOR THE SYSTEM:

None.

[FR Doc. 2011–19429 Filed 7–29–11; 8:45 am]

BILLING CODE 4810–25–P

DEPARTMENT OF AGRICULTURE

Animal and Plant Health Inspection Service

[Docket No. APHIS–2011–0069]

Notice of Request for Extension of Approval of an Information Collection; Pork and Poultry Products From Mexico Transiting the United States

AGENCY: Animal and Plant Health Inspection Service, USDA.

ACTION: Extension of approval of an information collection; comment request.

SUMMARY: In accordance with the Paperwork Reduction Act of 1995, this notice announces the Animal and Plant Health Inspection Service's intention to request an extension of approval of an

information collection associated with regulations for pork and poultry products from Mexico transiting the United States.

DATES: We will consider all comments that we receive on or before September 30, 2011.

ADDRESSES: You may submit comments by either of the following methods:

- *Federal eRulemaking Portal:* Go to *http://www.regulations.gov/#!documentDetail;D=APHIS-2011-0069-0001.*
- *Postal Mail/Commercial Delivery:* Send your comment to Docket No. APHIS–2011–0069, Regulatory Analysis and Development, PPD, APHIS, Station 3A–03.8, 4700 River Road Unit 118, Riverdale, MD 20737–1238.

Supporting documents and any comments we receive on this docket may be viewed at *http://www.regulations.gov/#!docketDetail;D=APHIS-20110069* or in our reading room, which is located in room 1141 of the USDA South Building, 14th Street and Independence Avenue, SW., Washington, DC. Normal reading room hours are 8 a.m. to 4:30 p.m., Monday through Friday, except holidays. To be sure someone is there to help you, please call (202) 690–2817 before coming.

FOR FURTHER INFORMATION CONTACT: For information on pork and poultry products from Mexico transiting the United States, contact Dr. Lynette Williams-McDuffie, Staff Veterinarian, Technical Trade Services—Products, National Center for Import and Export, VS, APHIS, 4700 River Road Unit 40, Riverdale, MD 20737; (301) 734–0677. For copies of more detailed information on the information collection, contact Mrs. Celeste Sickles, APHIS' Information Collection Coordinator, at (301) 851–2908.

SUPPLEMENTARY INFORMATION: *Title*: Pork and Poultry Products From Mexico Transiting the United States.

OMB Number: 0579–0145.

Type of Request: Extension of approval of an information collection.

Abstract: Under the Animal Health Protection Act (7 U.S.C. 8301 *et seq.*), the Animal and Plant Health Inspection Service (APHIS) of the United States Department of Agriculture is authorized, among other things, to prohibit the importation and interstate movement of animals and animal products to prevent the introduction into and dissemination within the United States of animal diseases and pests. To fulfill this mission, APHIS regulates the importation of animals and animal products into the United States. The regulations are contained in title 9, chapter 1, subchapter D, parts 91 through 99, of the Code of Federal Regulations.

The regulations in 9 CFR 94.15 allow fresh (chilled or frozen) pork and pork products and poultry carcasses, parts, and products (except eggs and egg products) that are not eligible to enter into the United States to transit the United States from specified States in Mexico, via land ports, for export to another country.

The regulations set out conditions for the transit movements that protect against the introduction of classical swine fever or exotic Newcastle disease into the United States. These conditions involve the use of information collection activities, including the completion of an import permit application, the placement of serially numbered seals on product containers, and the forwarding of a pre-arrival notification to U.S. port personnel.

We are asking the Office of Management and Budget (OMB) to approve our use of these information collection activities for an additional 3 years.

The purpose of this notice is to solicit comments from the public (as well as affected agencies) concerning our information collection. These comments will help us:

(1) Evaluate whether the collection of information is necessary for the proper performance of the functions of the Agency, including whether the information will have practical utility;

(2) Evaluate the accuracy of our estimate of the burden of the collection of information, including the validity of the methodology and assumptions used;

(3) Enhance the quality, utility, and clarity of the information to be collected; and

(4) Minimize the burden of the collection of information on those who are to respond, through use, as appropriate, of automated, electronic, mechanical, and other collection technologies; e.g., permitting electronic submission of responses.

Estimate of burden: The public reporting burden for this collection of information is estimated to average 0.91667 hours per response.

Respondents: U.S. importers of pork and poultry products from Mexico to the United States and Federal animal health authorities in Mexico.

Estimated annual number of respondents: 29.

Estimated annual number of responses per respondent: 1.2413793.

Estimated annual number of responses: 36.

Estimated total annual burden on respondents: 33 hours. (Due to averaging, the total annual burden hours may not equal the product of the annual number of responses multiplied by the reporting burden per response.)

All responses to this notice will be summarized and included in the request for OMB approval. All comments will also become a matter of public record.

Done in Washington, DC, this 26th day of July 2011.

Kevin Shea,

Acting Administrator, Animal and Plant Health Inspection Service.

[FR Doc. 2011–19363 Filed 7–29–11; 8:45 am]

BILLING CODE 3410–34–P

DEPARTMENT OF AGRICULTURE

Forest Service

Tehama County Resource Advisory Committee

AGENCY: Forest Service, USDA.

ACTION: Notice of meeting.

SUMMARY: The Tehama County Resource Advisory Committee (RAC) will meet in Red Bluff, California. The committee is authorized under the Secure Rural Schools and Community Self-Determination Act (Pub. L. 110–343) (the Act) and operates in compliance with the Federal Advisory Committee Act. The purpose of the committee is to improve collaborative relationships and to provide advice and recommendations to the Forest Service concerning projects and funding consistent with the title II of the Act. The meeting is open to the public. The purpose of the meeting is to discuss the future of the committee and to closeout business for 2011.

DATES: The meeting will be held on August 25, 2011 from 9 a.m. and end at approximately 12 noon.

ADDRESSES: The meeting will be held at the Lincoln Street School, Pine Room, 1135 Lincoln Street, Red Bluff, CA. Written comments may be submitted as described under **SUPPLEMENTARY INFORMATION**.

All comments, including names and addresses when provided, are placed in the record and are available for public inspection and copying. The public may inspect comments received at 825 N. Humboldt Ave., Willows, CA 95988. Please call ahead to (530) 934–1269 to facilitate entry into the building to view comments.

FOR FURTHER INFORMATION CONTACT: Randy Jero, Committee Coordinator, USDA, Mendocino National Forest, Grindstone Ranger District, 825 N. Humboldt Ave., Willows, CA 95988. (530) 934–1269; e-mail *rjero@fs.fed.us.*

Individuals who use telecommunication devices for the deaf (TDD) may call the Federal Information Relay Service (FIRS) at 1–800–877–8339 between 8 a.m. and 8 p.m., Eastern Standard Time, Monday through Friday. Requests for reasonable accomodation for access to the facility or procedings may be made by contacting the person listed **FOR FURTHER INFORMATION.**

SUPPLEMENTARY INFORMATION: The meeting is open to the public. Agenda items to be covered include: (1) Introductions, (2) Approval of Minutes, (3) Public Comment, (4) RAC Administrative Updates, (5) General Discussion, (6) Next Agenda. Anyone who would like to bring related matters to the attention of the committee may file written statements with the committee staff before or after the meeting. The agenda will include time for people to make oral statements of three minutes or less. Individuals wishing to make an oral statement should request in writing by August 22, 2011 to be scheduled on the agenda. Written comments and requests for time for oral comments must be sent to Randy Jero, Committee Coordinator, USDA, Mendocino National Forest, Grindstone Ranger District, 825 N. Humboldt Ave., Willows, CA 95988 or by e-mail to *rjero@fs.fed.us* or via facsimile to 530–934–1212.

Dated: July 26, 2011.

Eduardo Olmedo,

District Ranger.

[FR Doc. 2011–19366 Filed 7–29–11; 8:45 am]

BILLING CODE 3410–11–P

DEPARTMENT OF AGRICULTURE

Forest Service

Glenn/Colusa County Resource Advisory Committee

AGENCY: Forest Service, USDA.

ACTION: Notice of meeting.

SUMMARY: The Glenn/Colusa County Resource Advisory Committee (RAC) will meet in Willows, California. The committee is authorized under the Secure Rural Schools and Community Self-Determination Act (Pub. L 110–343) (the Act) and operates in compliance with the Federal Advisory Committee Act. The purpose of the committee is to improve collaborative relationships and to provide advice and recommendations to the Forest Service concerning projects and funding consistent with the title II of the Act. The meeting is open to the public. The purpose of the meeting is to present projects and vote on projects.

DATES: The meeting will be held on August 22, 2011 from 1:30 p.m. and end at approximately 4:30 p.m.

ADDRESSES: The meeting will be held in the field during the monitoring trip beginning at the Mendocino NF Supervisor's Office, 825 North Humboldt Ave., Willows, CA. Written comments may be submitted as described under Supplementary Information.

All comments, including names and addresses when provided, are placed in the record and are available for public inspection and copying. The public may inspect comments received at 825 N. Humboldt Ave., Willows, CA 95988. Please call ahead to (530) 934–1269 to facilitate entry into the building to view comments.

FOR FURTHER INFORMATION CONTACT: Randy Jero, Committee Coordinator, USDA, Mendocino National Forest, Grindstone Ranger District, 825 N. Humboldt Ave, Willows, CA 95988. (530) 934–1269; e-mail *rjero@fs.fed.us.*

Individuals who use telecommunication devices for the deaf (TDD) may call the Federal Information Relay Service (FIRS) at 1–800–877–8339 between 8 a.m. and 8 p.m., Eastern Standard Time, Monday through Friday. Requests for reasonable accomodation for access to the facility or procedings may be made by contacting the person listed **FOR FURTHER INFORMATION.**

SUPPLEMENTARY INFORMATION: The meeting is open to the public. Agenda items to be covered include: (1) Introductions, (2) Approval of Minutes, (3) RAC Administrative Updates, (4) Public Comment, (5) Project Presentations, (6) Vote on New Project Proposals, (7) General Discussion, (8) Adjourn. Anyone who would like to bring related matters to the attention of the committee may file written statements with the committee staff before or after the meeting. The agenda will include time for people to make oral statements of three minutes or less. Individuals wishing to make an oral statement should request in writing by August 15, 2011 to be scheduled on the agenda. Written comments and requests for time for oral comments must be sent to Randy Jero, Committee Coordinator, USDA, Mendocino National Forest, Grindstone Ranger District, 825 N. Humboldt Ave, Willows, CA 95988 or by e-mail to *rjero@fs.fed.us* or via facsimile to 530–934–1212.

Dated: July 25, 2011.

Eduardo Olmedo,

District Ranger.

[FR Doc. 2011–19368 Filed 7–29–11; 8:45 am]

BILLING CODE 3410–11–P

DEPARTMENT OF AGRICULTURE

Forest Service

Plumas County Resource Advisory Committee (RAC)

AGENCY: Forest Service, USDA.

ACTION: Notice of Meeting.

SUMMARY: The Plumas County Resource Advisory Committee (RAC) will hold a meeting on August 19, 2011 in Quincy, CA. This meeting was rescheduled from July 8, 2011. The purpose of the meeting is to review applications for Cycle 11 funding and select projects to be recommended to the Plumas National Forest Supervisor for calendar year 2012 funding consideration. The funding is made available under Title II provisions of the Secure Rural Schools and Community Self-Determination Act of 2000.

Date & Address: The meeting will take place from 9–1:30 at the Mineral Building-Plumas/Sierra County Fairgrounds, 208 Fairgrounds Road, Quincy, CA.

FOR FURTHER INFORMATION CONTACT: (or for special needs): Lee Anne Schramel Taylor, Forest Coordinator, USDA, Plumas National Forest, P.O. Box 11500/159 Lawrence Street, Quincy, CA 95971; (530) 283–7850; or by E-MAIL *eataylor@fs.fed.us.* Other RAC information may be obtained at *http://www.fs.fed.us/srs* .

Dated: July 25, 2011.

Laurence Crabtree,

Deputy Forest Supervisor.

[FR Doc. 2011–19354 Filed 7–29–11; 8:45 am]

BILLING CODE P

DEPARTMENT OF COMMERCE

Foreign-Trade Zones Board

[Docket 50–2011]

Foreign-Trade Zone 26—Atlanta, GA; Application for Manufacturing Authority; Makita Corporation of America (Hand-Held Power Tool and Gasoline/Electric-Powered Garden Product Manufacturing); Buford, GA

An application has been submitted to the Foreign-Trade Zones Board (the Board) by Georgia Foreign-Trade Zone, Inc., grantee of FTZ 26, requesting manufacturing authority on behalf of Makita Corporation of America (Makita), located in Buford, Georgia. The application was submitted pursuant to the provisions of the Foreign-Trade Zones Act, as amended (19 U.S.C. 81a–81u), and the regulations of the Board

(15 CFR part 400). It was formally filed on July 26, 2011.

The Makita facility (300 employees, 75 acres, up to 3 million units per year capacity) is located within Site 20 of FTZ 26. The facility is used for the manufacture of hand-held power tools and gasoline/electric-powered garden products. Components and materials sourced from abroad (representing 64% of the value of the finished product) include: batteries; armatures; tool bags; driver, hammer and angle drills; chargers; flashlights; gears, housings, clutches and gear shafts; radios; grips, thumb screws, knobs and handles; wrenches; switch units; power cords; flanges; screws; nuts and bolts; rubber rings, sleeves, grommets and plates; screws; ball bearings; battery covers and lenses; grease, lubricants and additives; felt rings; lock springs; lead wire assemblies; needle cages; drill bits; socket wrenches; styrene polymers; polyamides; resins; caulk; glues and adhesives; vinyl cases; vinyl tubes; labels; plastic bags; water tanks; plastic grips; rubber knobs and handles; plastic cases; dust bag assemblies; tool belts; grinding wheels; tapping screws; lock lever connectors; cotters and cotter pins; lock and spring pins; cup washers; set plates; safety wires; pipe clamps; copper nozzles; aluminum miter scales; caps, switch covers, throttle levers and pipe ends; safety guard assemblies; bearing boxes; steel balls; bearing housings and bushings; pulleys; joints; DC motors; heat sinks and spacers; coils; electrical outlets; electrical switches; switch levers; safety goggles; lighting assemblies; and ribbon (duty rate ranges from duty free to 20%). The application also requests authority to include a broad range of inputs and finished hand-held power tools and gasoline/electric-powered garden products that Makita may produce under FTZ procedures in the future. New major activity involving these inputs/products would require review by the FTZ Board.

FTZ procedures could exempt Makita from customs duty payments on the foreign components used in export production. The company anticipates that some 47 percent of the plant's shipments will be exported. On its domestic sales, Makita would be able to choose for the foreign inputs noted above the duty rates during customs entry procedures that apply to: Engine blowers; pneumatic compressors; pneumatic tools; table, slide and compound miter saws; drills and drill kits; drill and saw kits; drill, grinder, hammer, sander, planer, router and screw driver kits; gasoline/electric-powered brush cutters; and hedge trimmers (duty free—4.5%). FTZ designation would further allow Makita to realize logistical benefits through the use of weekly customs entry procedures. Customs duties also could possibly be deferred or reduced on foreign status production equipment. The request indicates that the savings from FTZ procedures would help improve the plant's international competitiveness.

In accordance with the Board's regulations, Christopher Kemp of the FTZ Staff is designated examiner to evaluate and analyze the facts and information presented in the application and case record and to report findings and recommendations to the Board.

Public comment is invited from interested parties. Submissions (original and 3 copies) shall be addressed to the Board's Executive Secretary at the address below. The closing period for their receipt is September 30, 2011. Rebuttal comments in response to material submitted during the foregoing period may be submitted during the subsequent 15-day period to October 17, 2011.

A copy of the application will be available for public inspection at the Office of the Executive Secretary, Foreign-Trade Zones Board, Room 2111, U.S. Department of Commerce, 1401 Constitution Avenue, NW., Washington, DC 20230–0002, and in the ''Reading Room'' section of the Board's Web site, which is accessible via *http://www.trade.gov/ftz.*

For further information, contact Christopher Kemp at *Christopher.Kemp@trade.gov* or (202) 482–0862.

Dated: July 26, 2011.

Andrew McGilvray,

Executive Secretary.

[FR Doc. 2011–19405 Filed 7–29–11; 8:45 am]

BILLING CODE 3510–DS–P

DEPARTMENT OF COMMERCE

Foreign-Trade Zones Board

[Docket 49–2011]

Proposed Foreign-Trade Zone—Brunswick, ME; Application

An application has been submitted to the Foreign-Trade Zones Board (the Board) by the Midcoast Regional Redevelopment Authority to establish a general-purpose foreign-trade zone at a site in Brunswick, Maine, adjacent to the Portland CBP port of entry. The application was submitted pursuant to the provisions of the Foreign-Trade Zones Act, as amended (19 U.S.C. 81a–81u), and the regulations of the Board (15 CFR part 400). It was formally filed on July 26, 2011. The applicant is authorized to make the proposal under Maine Statute Title 5, Section 13083–Q.

The proposed zone would be the second general-purpose zone for the Portland CBP port of entry. The existing zone is as follows: FTZ 263, Auburn, Maine (Grantee: Lewiston-Auburn Economic Growth Council, Board Order 1354, 10/01/04).

The proposed zone would consist of one site in Brunswick, Maine: Proposed Site 1 (394 acres)—within the 3,200-acre Brunswick Landing's Airport complex located at the intersection of Bath Road and Fitch Avenue. The site is owned by the Midcoast Regional Redevelopment Authority.

The application indicates a need for zone services in the Brunswick, Maine area. Several firms have indicated an interest in using zone procedures for warehousing/distribution activities for a variety of products. Specific manufacturing approvals are not being sought at this time. Such requests would be made to the Board on a case-by-case basis.

In accordance with the Board's regulations, Kathleen Boyce of the FTZ Staff is designated examiner to evaluate and analyze the facts and information presented in the application and case record and to report findings and recommendations to the Board.

Public comment is invited from interested parties. Submissions (original and 3 copies) shall be addressed to the Board's Executive Secretary at the address below. The closing period for their receipt is September 30, 2011. Rebuttal comments in response to material submitted during the foregoing period may be submitted during the subsequent 15-day period to October 17, 2011.

A copy of the application will be available for public inspection at the Office of the Executive Secretary, Foreign-Trade Zones Board, Room 2111, U.S. Department of Commerce, 1401 Constitution Avenue, NW., Washington, DC 20230–0002, and in the ''Reading Room'' section of the Board's Web site, which is accessible via *http://www.trade.gov/ftz.*

For further information, contact Kathleen Boyce at *Kathleen.Boyce@trade.gov* or (202) 482–1346.

Dated: July 27, 2011.

Andrew McGilvray,

Executive Secretary.

[FR Doc. 2011–19404 Filed 7–29–11; 8:45 am]

BILLING CODE P

DEPARTMENT OF COMMERCE

International Trade Administration

Antidumping or Countervailing Duty Order, Finding, or Suspended Investigation; Opportunity To Request Administrative Review

AGENCY: Import Administration, International Trade Administration, Department of Commerce.

FOR FURTHER INFORMATION CONTACT: Sheila E. Forbes, Office of AD/CVD Operations, Customs Unit, Import Administration, International Trade Administration, U.S. Department of Commerce, 14th Street and Constitution Avenue, NW., Washington, DC 20230, telephone: (202) 482–4697.

Background

Each year during the anniversary month of the publication of an antidumping or countervailing duty order, finding, or suspension of investigation, an interested party, as defined in section 771(9) of the Tariff Act of 1930, as amended (''the Act''), may request, in accordance with section 351.213 of the Department of Commerce (''the Department'') regulations, that the Department conduct an administrative review of that antidumping or countervailing duty order, finding, or suspended investigation.

All deadlines for the submission of comments or actions by the Department discussed below refer to the number of calendar days from the applicable starting date.

Respondent Selection

In the event the Department limits the number of respondents for individual examination for administrative reviews initiated pursuant to requests made for the orders identified below, the Department intends to select respondents based on U.S. Customs and Border Protection (''CBP'') data for U.S. imports during the period of review. We intend to release the CBP data under Administrative Protective Order (''APO'') to all parties having an APO within five days of publication of the initiation notice and to make our decision regarding respondent selection within 21 days of publication of the initiation **Federal Register** notice. Therefore, we encourage all parties interested in commenting on respondent selection to submit their APO application on the date of publication of the initiation notice, or as soon thereafter as possible. The Department invites comments regarding the CBP data and respondent selection within five days of placement of the CBP data on the record of the review.

In the event the Department decides it is necessary to limit individual examination of respondents and conduct respondent selection under section 777A(c)(2) of the Act:

In general, the Department has found that determinations concerning whether particular companies should be ''collapsed'' (*i.e.,* treated as a single entity for purposes of calculating antidumping duty rates) require a substantial amount of detailed information and analysis, which often require follow-up questions and analysis. Accordingly, the Department will not conduct collapsing analyses at the respondent selection phase of this review and will not collapse companies at the respondent selection phase unless there has been a determination to collapse certain companies in a previous segment of this antidumping proceeding (*i.e.,* investigation, administrative review, new shipper review or changed circumstances review). For any company subject to this review, if the Department determined, or continued to treat, that company as collapsed with others, the Department will assume that such companies continue to operate in the same manner and will collapse them for respondent selection purposes. Otherwise, the Department will not-collapse companies for purposes of respondent selection. Parties are requested to (a) identify which companies subject to review previously were collapsed, and (b) provide a citation to the proceeding in which they were collapsed. Further, if companies are requested to complete the Quantity and Value Questionnaire for purposes of respondent selection, in general each company must report volume and value data separately for itself. Parties should not include data for any other party, even if they believe they should be treated as a single entity with that other party. If a company was collapsed with another company or companies in the most recently completed segment of this proceeding where the Department considered collapsing that entity, complete quantity and value data for that collapsed entity must be submitted.

Deadline for Withdrawal of Request for Administrative Review

Pursuant to section 351.213(d)(1) of the Department's regulations, a party that has requested a review may withdraw that request within 90 days of the date of publication of the notice of initiation of the requested review. The regulation provides that the Department may extend this time if it is reasonable to do so. In order to provide parties additional certainty with respect to when the Department will exercise its discretion to extend this 90-day deadline, interested parties are advised that, with regard to reviews requested on the basis of anniversary months on or after August 2011, the Department will not consider extending the 90-day deadline unless the requestor demonstrates that an extraordinary circumstance has prevented it from submitting a timely withdrawal request. Determinations by the Department to extend the 90-day deadline will be made on a case-by-case basis.

The Department is providing this notice on its Web site, as well as in its ''Opportunity to Request Administrative Review'' notices, so that interested parties will be aware of the manner in which the Department intends to exercise its discretion in the future.

Opportunity to Request a Review: Not later than the last day of August 2011,[1] interested parties may request administrative review of the following orders, findings, or suspended investigations, with anniversary dates in August for the following periods:

	Period of review
Antidumping Duty Proceedings	
Germany:	
Corrosion-Resistant Carbon Steel Flat Products, A–428–815	8/1/10–7/31/11
Certain Small Diameter Seamless Carbon and Alloy Steel Standard, Line and Pressure Pipe, A–428–820	8/1/10–7/31/11
Sodium Nitrite, A–428–841	8/1/10–7/31/11
Italy: Granular Polytetrafluoroethylene Resin, A–475–703	8/1/10–7/31/11
Japan:	

[1] Or the next business day, if the deadline falls on a weekend, federal holiday or any other day when the Department is closed.

	Period of review
Brass Sheet & Strip, A–588–704	8/1/10–7/31/11
Granular Polytetrafluoroethylene Resin, A–588–707	8/1/10–12/21/10
Tin Mill Products, A–588–854	8/1/10–7/31/11
Malaysia: Polyethylene Retail Carrier Bags, A–557–813	8/1/10–7/31/11
Mexico: Light-Walled Rectangular Pipe and Tube, A–201–836	8/1/10–7/31/11
Romania: Carbon and Alloy Seamless Standard, Line, and Pressure Pipe (Under 4½ Inches), A–485–805	8/1/10–7/31/11
South Korea:	
Corrosion-Resistant Carbon Steel Flat Products, A–580–816	8/1/10–7/31/11
Light-Walled Rectangular Pipe and Tube, A–580–859	8/1/10–7/31/11
Thailand: Polyethylene Retail Carrier Bags, A–549–821	8/1/10–7/31/11
The People's Republic of China:	
Certain Tow-Behind Lawn Groomers and Certain Parts Thereof, A–570–939	8/1/10–7/31/11
Certain Woven Electric Blankets, A–570–951	2/3/10–7/31/11
Floor Standing Metal-Top Ironing Tables and Parts Thereof, A–570–888	8/1/10–7/31/11
Laminated Woven Sacks, A–570–916	8/1/10–7/31/11
Light-Walled Rectangular Pipe and Tube, A–570–914	8/1/10–7/31/11
Petroleum Wax Candles, A–570–504	8/1/10–7/31/11
Polyethylene Retail Carrier Bags, A–570–886	8/1/10–7/31/11
Sodium Nitrite, A–570–925	8/1/10–7/31/11
Steel Nails, A–570–909	8/1/10–7/31/11
Sulfanilic Acid, A–570–815	8/1/10–7/31/11
Tetrahydrofurfuryl Alcohol, A–570–887	8/1/10–7/31/11
Vietnam: Frozen Fish Fillets, A–552–801	8/1/10–7/31/11
Countervailing Duty Proceedings	
South Korea:	
Corrosion-Resistant Carbon Steel Flat Products, C–580–818	1/1/10–12/31/10
Stainless Steel Sheet and Strip in Coils, C–580–835	1/1/10–12/31/10
The People's Republic of China:	
Certain Tow-Behind Lawn Groomers and Certain Parts Thereof, C–570–940	1/1/10–12/31/10
Laminated Woven Sacks, C–570–917	1/1/10–12/31/10
Light-Walled Rectangular Pipe and Tube, C–570–915	1/1/10–12/31/10
Sodium Nitrite, C–570–926	1/1/10–12/31/10

Suspension Agreements

None.

In accordance with section 351.213(b), an interested party as defined by section 771(9) of the Act may request in writing that the Secretary conduct an administrative review. For both antidumping and countervailing duty reviews, the interested party must specify the individual producers or exporters covered by an antidumping finding or an antidumping or countervailing duty order or suspension agreement for which it is requesting a review. In addition, a domestic interested party or an interested party described in section 771(9)(B) of the Act must state why it desires the Secretary to review those particular producers or exporters.[2] If the interested party intends for the Secretary to review sales of merchandise by an exporter (or a producer if that producer also exports merchandise from other suppliers) which were produced in more than one country of origin and each country of origin is subject to a separate order, then the interested party must state specifically, on an order-by-order basis, which exporter(s) the request is intended to cover.

Please note that, for any party the Department was unable to locate in prior segments, the Department will not accept a request for an administrative review of that party absent new information as to the party's location. Moreover, if the interested party who files a request for review is unable to locate the producer or exporter for which it requested the review, the interested party must provide an explanation of the attempts it made to locate the producer or exporter at the same time it files its request for review, in order for the Secretary to determine if the interested party's attempts were reasonable, pursuant to section 351.303(f)(3)(ii) of the Department's regulations.

As explained in *Antidumping and Countervailing Duty Proceedings: Assessment of Antidumping Duties,* 68 FR 23954 (May 6, 2003), the Department has clarified its practice with respect to the collection of final antidumping duties on imports of merchandise where intermediate firms are involved. The public should be aware of this clarification in determining whether to request an administrative review of merchandise subject to antidumping findings and orders. *See also* the Import Administration Web site at *http://ia.ita.doc.gov.*

If the request is filed prior to August 5, 2011, six copies of the request should be submitted to the Assistant Secretary for Import Administration, International Trade Administration, Room 1870, U.S. Department of Commerce, 14th Street and Constitution Avenue, NW., Washington, DC 20230. For requests filed on or after August 5, 2011, the request must be filed electronically in Import Administration's Antidumping and Countervailing Duty Centralized Electronic Service System (''IA ACCESS'') on the IA ACCESS Web site at *http://iaaccess.trade.gov. See Antidumping and Countervailing Duty Proceedings: Electronic Filing Procedures; Administrative Protective Order Procedures,* 76 FR 39263 (July 6, 2011). Further, in accordance with section 351.303(f)(l)(i) of the regulations, a copy of each request must be served on the petitioner and each exporter or producer specified in the request.

The Department will publish in the **Federal Register** a notice of ''Initiation of Administrative Review of Antidumping or Countervailing Duty Order, Finding, or Suspended Investigation'' for requests received by the last day of August 2011. If the

[2] If the review request involves a non-market economy and the parties subject to the review request do not qualify for separate rates, all other exporters of subject merchandise from the non-market economy country who do not have a separate rate will be covered by the review as part of the single entity of which the named firms are a part.

Department does not receive, by the last day of August 2011, a request for review of entries covered by an order, finding, or suspended investigation listed in this notice and for the period identified above, the Department will instruct CBP to assess antidumping or countervailing duties on those entries at a rate equal to the cash deposit of (or bond for) estimated antidumping or countervailing duties required on those entries at the time of entry, or withdrawal from warehouse, for consumption and to continue to collect the cash deposit previously ordered.

For the first administrative review of any order, there will be no assessment of antidumping or countervailing duties on entries of subject merchandise entered, or withdrawn from warehouse, for consumption during the relevant provisional-measures ''gap'' period, of the order, if such a gap period is applicable to the period of review.

This notice is not required by statute but is published as a service to the international trading community.

Dated: July 27, 2011.

Christian Marsh,

Deputy Assistant Secretary for Antidumping and Countervailing Duty Operations.

[FR Doc. 2011–19411 Filed 7–29–11; 8:45 am]

BILLING CODE 3510–DS–P

DEPARTMENT OF COMMERCE

International Trade Administration

Antidumping or Countervailing Duty Order, Finding, or Suspended Investigation; Advance Notification of Sunset Reviews

AGENCY: Import Administration, International Trade Administration, Department of Commerce.

Background

Every five years, pursuant to section 751(c) of the Tariff Act of 1930, as amended (''the Act''), the Department of Commerce (''the Department'') and the International Trade Commission automatically initiate and conduct a review to determine whether revocation of a countervailing or antidumping duty order or termination of an investigation suspended under section 704 or 734 of the Act would be likely to lead to continuation or recurrence of dumping or a countervailable subsidy (as the case may be) and of material injury.

Upcoming Sunset Reviews for September 2011

The following Sunset Reviews are scheduled for initiation in September 2011 and will appear in that month's Notice of Initiation of Five-Year Sunset Reviews.

Antidumping duty proceedings	Department contact
Furfuryl Alcohol from the People's Republic of China (A–570–835) (3rd Review)	Julia Hancock, (202) 482–1394.
Fresh Garlic from the People's Republic of China (A–570–831) (3rd Review)	Dana Mermelstein, (202) 482–1391.
Ferrovanadium and Nitrided Vanadium from Russia (A–821–807) (3rd Review)	David Goldberger, (202) 482–4136.

Countervailing Duty Proceedings

No Sunset Review of countervailing duty orders is scheduled from initiation in September 2011.

Suspended Investigations

No Sunset Review of suspended investigations is scheduled from initiation in September 2011.

The Department's procedures for the conduct of Sunset Reviews are set forth in 19 CFR 351.218. Guidance on methodological or analytical issues relevant to the Department's conduct of Sunset Reviews is set forth in the Department's Policy Bulletin 98.3—*Policies Regarding the Conduct of Five-year (''Sunset'') Reviews of Antidumping and Countervailing Duty Orders; Policy Bulletin,* 63 FR 18871 (April 16, 1998). The Notice of Initiation of Five-Year (''Sunset'') Reviews provides further information regarding what is required of all parties to participate in Sunset Reviews.

Pursuant to 19 CFR 351.103(c), the Department will maintain and make available a service list for these proceedings. To facilitate the timely preparation of the service list(s), it is requested that those seeking recognition as interested parties to a proceeding contact the Department in writing within 10 days of the publication of the Notice of Initiation.

Please note that if the Department receives a Notice of Intent to Participate from a member of the domestic industry within 15 days of the date of initiation, the review will continue. Thereafter, any interested party wishing to participate in the Sunset Review must provide substantive comments in response to the notice of initiation no later than 30 days after the date of initiation.

This notice is not required by statute but is published as a service to the international trading community.

Dated: July 19, 2011.

Christian Marsh,

Deputy Assistant Secretary for Antidumping and Countervailing Duty Operations.

[FR Doc. 2011–19413 Filed 7–29–11; 8:45 am]

BILLING CODE 3510–DS–P

DEPARTMENT OF COMMERCE

International Trade Administration

[A–552–802]

Fourth New Shipper Review of Certain Frozen Warmwater Shrimp From the Socialist Republic of Vietnam: Final Results of Antidumping Duty New Shipper Review

AGENCY: Import Administration, International Trade Administration, Department of Commerce.

SUMMARY: On April 13, 2011, the Department of Commerce (the ''Department'') published the preliminary results of the fourth new shipper review (''NSR'') on certain frozen warmwater shrimp (''shrimp'') from the Socialist Republic of Vietnam (''Vietnam''), covering the period of review (''POR'') of February 1, 2010–July 31, 2010.[1] The Department received no comments on its *Preliminary Results.*

DATES: *Effective Date:* August 1, 2011.

FOR FURTHER INFORMATION CONTACT: Paul Walker, AD/CVD Operations, Import Administration, International Trade Administration, U.S. Department of

[1] *See Certain Frozen Warmwater Shrimp from the Socialist Republic of Vietnam: Preliminary Results of Antidumping Duty New Shipper Review,* 76 FR 20627 (April 13, 2011) (''*Preliminary Results*'').

Commerce, 14th Street and Constitution Avenue, NW., Washington, DC 20230; telephone: (202) 482–0413.

Case History

The Department invited interested parties to comment on the *Preliminary Results.* On May 13, 2011, Quoc Viet Seaproducts Processing Trading and Import-Export Co., Ltd. (''Quoc Viet'') submitted a case brief.[2] No other interested party submitted a case brief. On May 16, 2011 Quoc Viet withdrew its case brief.[3] On June 23, 2011 the Department released a letter concerning labor wage rates.[4] On July 7, 2011 Quoc Viet submitted comments on labor wage rates. On July 11, 2011 Quoc Viet withdrew its labor wage rate comments.[5] As a consequence, there are no case briefs, comments or hearing requests since the *Preliminary Results* on the record of this NSR.

Scope of Order

The scope of the order includes certain warmwater shrimp and prawns, whether frozen, wild-caught (ocean harvested) or farm-raised (produced by aquaculture), head-on or head-off, shell-on or peeled, tail-on or tail-off,[6] deveined or not deveined, cooked or raw, or otherwise processed in frozen form.

The frozen warmwater shrimp and prawn products included in the scope of this order, regardless of definitions in the Harmonized Tariff Schedule of the United States (''HTS''), are products which are processed from warmwater shrimp and prawns through freezing and which are sold in any count size.

The products described above may be processed from any species of warmwater shrimp and prawns. Warmwater shrimp and prawns are generally classified in, but are not limited to, the *Penaeidae* family. Some examples of the farmed and wild-caught warmwater species include, but are not limited to, whiteleg shrimp (*Penaeus vannemei*), banana prawn (*Penaeus merguiensis*), fleshy prawn (*Penaeus chinensis*), giant river prawn (*Macrobrachium rosenbergii*), giant tiger prawn (*Penaeus monodon*), redspotted shrimp (*Penaeus brasiliensis*), southern brown shrimp (*Penaeus subtilis*), southern pink shrimp (*Penaeus notialis*), southern rough shrimp (*Trachypenaeus curvirostris*), southern white shrimp (*Penaeus schmitti*), blue shrimp (*Penaeus stylirostris*), western white shrimp (*Penaeus occidentalis*) and Indian white prawn (*Penaeus indicus*).

Frozen shrimp and prawns that are packed with marinade, spices or sauce are included in the scope of this order. In addition, food preparations (including dusted shrimp), which are not ''prepared meals,'' that contain more than 20 percent by weight of shrimp or prawn are also included in the scope of this order.

Excluded from the scope are: (1) Breaded shrimp and prawns (HTS subheading 1605.20.1020); (2) shrimp and prawns generally classified in the *Pandalidae* family and commonly referred to as coldwater shrimp, in any state of processing; (3) fresh shrimp and prawns whether shell-on or peeled (HTS subheadings 0306.23.0020 and 0306.23.0040); (4) shrimp and prawns in prepared meals (HTS subheading 1605.20.0510); (5) dried shrimp and prawns; (6) canned warmwater shrimp and prawns (HTS subheading 1605.20.1040); and (7) certain battered shrimp. Battered shrimp is a shrimp-based product: (1) That is produced from fresh (or thawed-from-frozen) and peeled shrimp; (2) to which a ''dusting'' layer of rice or wheat flour of at least 95 percent purity has been applied; (3) with the entire surface of the shrimp flesh thoroughly and evenly coated with the flour; (4) with the non-shrimp content of the end product constituting between four and 10 percent of the product's total weight after being dusted, but prior to being frozen; and (5) that is subjected to individually quick frozen (''IQF'') freezing immediately after application of the dusting layer. When dusted in accordance with the definition of dusting above, the battered shrimp product is also coated with a wet viscous layer containing egg and/or milk, and par-fried.

The products covered by this order are currently classified under the following HTS subheadings: 0306.13.0003, 0306.13.0006, 0306.13.0009, 0306.13.0012, 0306.13.0015, 0306.13.0018, 0306.13.0021, 0306.13.0024, 0306.13.0027, 0306.13.0040, 1605.20.1010 and 1605.20.1030. These HTS subheadings are provided for convenience and for customs purposes only and are not dispositive, but rather the written description of the scope of this order is dispositive.

Labor Wage Rate

Section 733(c) of the Tariff Act of 1930, as amended (the ''Act''), provides that the Department will value the factors of production (''FOP'') in NME cases using the best available information regarding the value of such factors in a market economy (''ME'') country or countries considered to be appropriate by the administering authority. The Act requires that when valuing FOP, the Department utilize, to the extent possible, the prices or costs of factors of production in one or more ME countries that are (1) At a comparable level of economic development and (2) significant producers of comparable merchandise.[7]

Previously, the Department used regression-based wages that captured the worldwide relationship between *per capita* Gross National Income (''GNI'') and hourly manufacturing wages, pursuant to section 351.408(c)(3) of the Department's regulations, to value the respondent's cost of labor. However, on May 14, 2010 the Court of Appeals for the Federal Circuit (''CAFC''), in *Dorbest Ltd.* v. *United States,* 604 F.3d 1363, 1372 (Fed. Cir. 2010) (''*Dorbest*''), invalidated section 351.408(c)(3) of the Department's regulations. As a consequence of the CAFC's ruling in *Dorbest,* the Department no longer relies on the regression-based wage rate methodology described in its regulations. On February 18, 2011 the Department published a request for public comment on the interim methodology, and the data sources.[8]

On June 21, 2011 the Department revised its methodology for valuing the labor input in NME antidumping proceedings.[9] In *Labor Methodologies,* the Department determined that the best methodology to value the labor input is to use industry-specific labor rates from the primary surrogate country. Additionally, the Department determined that the best data source for industry-specific labor rates is Chapter 6A: Labor Cost in Manufacturing, from the International Labor Organization (''ILO'') *Yearbook of Labor Statistics* (''*Yearbook*'').

As Bangladesh does not report labor data to the ILO, we are unable to use

[2] *See* Quoc Viet's May 13, 2011 submission.

[3] According to Quoc Viet, because no other party submitted comments on the final results, and because the issues raised by Quoc Viet in its case brief would have no impact on the *Preliminary Determination,* which has already established that Quoc Viet is not dumping, Quoc Viet withdrew its case brief. *See* Quoc Viet's May 16, 2011 submission.

[4] *See* the Department's letter dated June 23, 2011.

[5] Quoc Viet reiterated its statements made in its May 16, 2011, submission, that that its comments would have no impact on the *Preliminary Results,* and thus, withdrew its comments. *See* Quoc Viet's July 11, 2011 submission.

[6] ''Tails'' in this context means the tail fan, which includes the telson and the uropods.

[7] *See* section 773(c)(4) of the Act.

[8] *See Antidumping Methodologies in Proceedings Involving Non-Market Economies: Valuing the Factor of Production: Labor, Request for Comment,* 76 FR 9544 (Feb. 18, 2011).

[9] *See Antidumping Methodologies in Proceedings Involving Non-Market Economies: Valuing the Factor of Production: Labor,* 76 FR 36092 (June 21, 2011) (''*Labor Methodologies*'').

Chapter 6 data to value Quoc Viet's labor wage rate for these final results. However, the record does contain a labor value for shrimp processing in Bangladesh, published by the Bangladesh Bureau of Statistics. The Department finds this labor value to be the best available information on the record because it is specific to the industry being examined, and is therefore derived from industries that produce comparable merchandise. Because this value is not contemporaneous to the POR, we inflated it using the Consumer Price Index (''CPI'') rate for Bangladesh, as published in the *International Financial Statistics* of the International Monetary Fund. Thus, for the final results we valued labor using an industry-specific labor rate from the primary surrogate country. The calculated industry-specific wage rate is 16.71 Bangladeshi takas per hour. A more detailed description of the wage rate calculation methodology is provided in the Memorandum to the File, through Scot T. Fullerton, Program Manager, from Paul Walker, Case Analyst, ''Fourth New Shipper Review of Certain Frozen Warmwater Shrimp from the Socialist Republic of Vietnam: Surrogate Values for the Final Results,'' dated concurrently with this memorandum.

As stated above, the Department valued Quoc Viet's labor using Bangladeshi government data. Because there is no record evidence as to whether this data contains all costs related to labor, including wages, benefits, housing, training, etc., we have made no adjustments to the surrogate financial ratios for the itemized detail of indirect labor costs, as noted in *Labor Methodologies.*

Final Results of Review

The Department finds that the following margin exists for Quoc Viet for the period February 1, 2010–July 31, 2010:

CERTAIN FROZEN WARMWATER SHRIMP FROM VIETNAM

Manufacturer/Exporter	Margin percent
Quoc Viet	0.00 (*de minimis.*)

Assessment of Antidumping Duties

Upon issuance of the final results, the Department will determine, and U.S. Customs and Border Protection (''CBP'') shall assess, antidumping duties on all appropriate entries. The Department intends to issue assessment instructions to CBP 15 days after the date of publication of the final results of review. Pursuant to section 351.212(b)(1) of the Department's regulations, we will calculate importer-specific (or customer-specific) *ad valorem* duty assessment rates based on the ratio of the total amount of the dumping margins calculated for the examined sales to the total entered value of those same sales. In accordance with section 351.106(c)(2) of the Department's regulations, we will instruct CBP to liquidate, without regard to antidumping duties, all entries of subject merchandise during the POR for which the importer-specific assessment rate is zero or *de minimis.*

Cash Deposit Requirements

The following cash deposit requirements will be effective upon publication of the final results of this new shipper review for all shipments of subject merchandise by Quoc Viet, entered, or withdrawn from warehouse, for consumption on or after the publication date, as provided by section 751(a)(2)(C) of the Tariff Act of 1930, as amended (the ''Act''): (1) For subject merchandise produced and exported by Quoc Viet, the cash deposit rate will be zero; (2) for subject merchandise exported by Quoc Viet, but not manufactured by Quoc Viet, the cash deposit rate will continue to be the Vietnam-wide rate of 25.76 percent; and (3) for subject merchandise manufactured by Quoc Viet, but exported by any party other than Quoc Viet, the cash deposit rate will be the rate applicable to the exporter. These cash deposit requirements will remain in effect until further notice.

Notification to Importers

This notice serves as a final reminder to importers of their responsibility under section 351.402(f)(2) of the Department's regulations to file a certificate regarding the reimbursement of antidumping duties prior to liquidation of the relevant entries during the POR. Failure to comply with this requirement could result in the Department's presumption that reimbursement of antidumping duties has occurred and the subsequent assessment of doubled antidumping duties.

Administrative Protective Orders

This notice also serves as a final reminder to parties subject to the administrative protective order (''APO'') of their responsibility concerning the return or destruction of proprietary information disclosed under the APO, in accordance with section 351.305 of the Department's regulations, which continues to govern business proprietary information in this segment of the proceeding. Timely written notification of the return or destruction of APO materials or conversion to judicial protective order is hereby requested. Failure to comply with the regulations and the terms of an APO is a sanctionable violation.

We are issuing and publishing this NSR notice in accordance with sections 751(a)(2)(b) and 777(i) of the Act.

Dated: July 25, 2011.

Ronald K. Lorentzen,

Deputy Assistant Secretary for Import Administration.

[FR Doc. 2011–19388 Filed 7–29–11; 8:45 am]

BILLING CODE 3510–DS–P

DEPARTMENT OF COMMERCE

International Trade Administration

[A–570–601]

Tapered Roller Bearings and Parts Thereof, Finished and Unfinished From the People's Republic of China: Initiation of Antidumping Duty New Shipper Review

AGENCY: Import Administration, International Trade Administration, Department of Commerce.

DATES: *Effective Date:* August 1, 2011.

SUMMARY: The Department of Commerce (''Department'') has determined that a request for a new shipper review (''NSR'') of the antidumping duty order on tapered roller bearings (''TRBs'') from the People's Republic of China (''PRC'') meets the statutory and regulatory requirements for initiation. The period of review (''POR'') for this NSR is June 1, 2010, through May 31, 2011.

FOR FURTHER INFORMATION CONTACT: Demitri Kalogeropoulos, AD/CVD Operations, Office 8, Import Administration, International Trade Administration, U.S. Department of Commerce, 14th Street and Constitution Avenue, NW., Washington, DC 20230; telephone: 202–482–2623.

SUPPLEMENTARY INFORMATION:

Background

The notice announcing the antidumping duty order on TRBs from the PRC was published in the **Federal Register** on June 15, 1987. *See Antidumping Duty Order; Tapered Roller Bearings and Parts Thereof, Finished or Unfinished, From the People's Republic of China,* 52 FR 22667 (June 15, 1987) (''*Order*''). On June 30, 2011, pursuant to section 751(a)(2)(B)(i) of the Tariff Act of 1930, as amended (''Act''), and 19 CFR 351.214(b), the

Department received a NSR request from GGB Bearing Technology (Suzhou) Co., Ltd. (''GGB''). GGB's request was made in June 2011, which is the anniversary month of the *Order. See* 19 CFR 351.214(d).

In its submission, GGB certified that it is the exporter and producer of the subject merchandise upon which the request was based. Pursuant to section 751(a)(2)(B)(i)(I) of the Act and 19 CFR 351.214(b)(2)(i), GGB certified that it did not export TRBs to the United States during the period of investigation (''POI''). In addition, pursuant to section 751(a)(2)(B)(i)(II) of the Act and 19 CFR 351.214(b)(2)(iii)(A), GGB certified that, since the initiation of the investigation, it has not been affiliated with a PRC exporter or producer who exported TRBs to the United States during the POI, including those not individually examined during the investigation. As required by 19 CFR 351.214(b)(2)(iii)(B), GGB also certified that its export activities were not controlled by the central government of the PRC.

In addition to the certifications described above, pursuant to 19 CFR 351.214(b)(2)(iv), GGB submitted documentation establishing the following: (1) The date on which GGB first shipped TRBs for export to the United States and the date on which the TRBs were first entered, or withdrawn from warehouse, for consumption; (2) the volume of its first shipment; and (3) the date of its first sale to an unaffiliated customer in the United States.

The Department conducted U.S. Customs and Border Protection (''CBP'') database queries in an attempt to confirm that GGB's shipments of subject merchandise had entered the United States for consumption and that liquidation of such entries had been properly suspended for antidumping duties. The Department also examined whether the CBP data confirmed that such entries were made during the NSR POR.[1] The information which the Department examined was consistent with that provided by GGB in its request. See Memorandum to the File titled ''Initiation of Antidumping New Shipper Review: Tapered Roller Bearings and Parts Thereof, Finished and Unfinished, from the People's Republic of China, A–570–601,'' (''Initiation Checklist'') dated concurrently with this notice.

Period of Review

In accordance with 19 CFR 351.214(g)(1)(i)(A), the POR for a NSR initiated in the month immediately following the anniversary month will be the twelve-month period immediately preceding the anniversary month. Therefore, the POR for this NSR is June 1, 2010, through May 31, 2011. The sales and entries into the United States of subject merchandise produced and exported by GGB occurred during this twelve-month POR.

Initiation of New Shipper Review

Pursuant to section 751(a)(2)(B) of the Act and 19 CFR 351.214(b), the Department finds that the request submitted by GGB meets the threshold requirements for initiation of a NSR for the shipment of TRBs from the PRC produced and exported by GGB. *See* Initiation Checklist. However, if the information supplied by GGB is later found to be incorrect or insufficient during the course of this proceeding, the Department may rescind the review or apply adverse facts available pursuant to section 776 of the Act, depending upon the facts on record. The Department intends to issue the preliminary results of this NSR no later than 180 days from the date of initiation, and the final results no later than 90 days from the issuance of the preliminary results. See section 751(a)(2)(B)(iv) of the Act.

It is the Department's usual practice, in cases involving non-market economies, to require that a company seeking to establish eligibility for an antidumping duty rate separate from the country-wide rate provide evidence of *de jure* and *de facto* absence of government control over the company's export activities. Accordingly, the Department will issue a questionnaire to GGB which will include a section requesting information with regard to GGB's export activities for separate rates purposes. The review will proceed if the response provides sufficient indication that GGB is not subject to either *de jure* or *de facto* government control with respect to its export of subject merchandise.

The Department will instruct CBP to allow, at the option of the importer, the posting, until the completion of the review, of a bond or security in lieu of a cash deposit for each entry of the subject merchandise from GGB in accordance with section 751(a)(2)(B)(iii) of the Act and 19 CFR 351.214(e). Because GGB certified that it produced and exported the subject merchandise, the Department will apply the bonding privilege to GGB for all subject merchandise produced and exported by GGB.

To assist in its analysis of the *bona fides* of GGB's sales, upon initiation of this new shipper review, the Department will require GGB to submit on an ongoing basis complete transaction information concerning any sales of subject merchandise to the United States that were made subsequent to the POR.

Interested parties requiring access to proprietary information in this NSR should submit applications for disclosure under administrative protective order in accordance with 19 CFR 351.305 and 19 CFR 351.306. This initiation and notice are in accordance with section 751(a)(2)(B) of the Act and 19 CFR 351.214 and 19 CFR 351.221(c)(1)(i).

Dated: July 27, 2011.

Christian Marsh,

Deputy Assistant Secretary for Antidumping and Countervailing Duty Operations.

[FR Doc. 2011–19407 Filed 7–29–11; 8:45 am]

BILLING CODE 3510–DS–P

[1] *See* July 14, 2011, memorandum to the file, regarding ''U.S. Customs and Border Protection Data.''

DEPARTMENT OF COMMERCE

International Trade Administration

Initiation of Five-Year (''Sunset'') Review

AGENCY: Import Administration, International Trade Administration, Department of Commerce.

SUMMARY: In accordance with section 751(c) of the Tariff Act of 1930, as amended (''the Act''), the Department of Commerce (''the Department'') is automatically initiating a five-year review (''Sunset Review'') of the antidumping and countervailing duty orders listed below. The International Trade Commission (''the Commission'') is publishing concurrently with this notice its notice of *Institution of Five-Year Review* which covers the same orders.

DATES: *Effective Date:* August 1, 2011.

FOR FURTHER INFORMATION CONTACT: The Department official identified in the *Initiation of Review* section below at AD/CVD Operations, Import Administration, International Trade Administration, U.S. Department of Commerce, 14th Street and Constitution Avenue, NW., Washington, DC 20230. For information from the Commission contact Mary Messer, Office of Investigations, U.S. International Trade Commission at (202) 205–3193.

SUPPLEMENTARY INFORMATION:

Background

The Department's procedures for the conduct of Sunset Reviews are set forth in its *Procedures for Conducting Five-Year (''Sunset'') Reviews of*

Antidumping and Countervailing Duty Orders, 63 FR 13516 (March 20, 1998) and 70 FR 62061 (October 28, 2005). Guidance on methodological or analytical issues relevant to the Department's conduct of Sunset Reviews is set forth in the Department's Policy Bulletin 98.3—*Policies Regarding the Conduct of Five-Year (''Sunset'') Reviews of Antidumping and Countervailing Duty Orders: Policy Bulletin,* 63 FR 18871 (April 16, 1998).

Initiation of Review

In accordance with 19 CFR 351.218(c), we are initiating the Sunset Review of the following antidumping and countervailing duty orders:

DOC Case No.	ITC Case No.	Country	Product	Department Contact
A–570–601	731–TA–344	PRC	Tapered Roller Bearings and Parts Thereof, Finished and Unfinished (3rd Review).	Julia Hancock, (202) 482–1394.
A–570–828	731–TA–672	PRC	Silicomanganese (3rd Review)	Julia Hancock, (202) 482–1394.
A–351–824	731–TA–671	Brazil	Silicomanganese (3rd Review)	Dana Mermelstein, (202) 482–1391.
A–823–805	731–TA–673	Ukraine	Silicomanganese (3rd Review)	Dana Mermelstein, (202) 482–1391.
A–427–801	731–TA–392–A	France	Ball Bearings and Parts Thereof (3rd Review)	Dana Mermelstein, (202) 482–1391.
A–428–801	731–TA–391–A	Germany	Ball Bearings and Parts Thereof (3rd Review)	Dana Mermelstein, (202) 482–1391.
A–475–801	731–TA–393–A	Italy	Ball Bearings and Parts Thereof (3rd Review)	Dana Mermelstein, (202) 482–1391.
A–588–804	731–TA–394–A	Japan	Ball Bearings and Parts Thereof (3rd Review)	Dana Mermelstein, (202) 482–1391.
A–412–801	731–TA–399–A	United Kingdom	Ball Bearings and Parts Thereof (3rd Review)	Dana Mermelstein, (202) 482–1391.
A–570–901	731–TA–1095	PRC	Lined Paper Products (a.k.a. Lined Paper School Supplies).	David Goldberger, (202) 482–4136.
A–533–843	731–TA–1096	India	Lined Paper Products (a.k.a. Lined Paper School Supplies).	David Goldberger, (202) 482–4136.
A–560–818	731–TA–1097	Indonesia	Lined Paper Products (a.k.a. Lined Paper School Supplies).	David Goldberger, (202) 482–4136.
C–533–844	731–TA–442	India	Lined Paper Products (a.k.a. Lined Paper School Supplies).	David Goldberger, (202) 482–4136.
C–560–819	731–TA–443	Indonesia	Lined Paper Products (a.k.a. Lined Paper School Supplies).	David Goldberger, (202) 482–4136.

Filing Information

As a courtesy, we are making information related to Sunset proceedings, including copies of the pertinent statute and Department's regulations, the Department schedule for Sunset Reviews, a listing of past revocations and continuations, and current service lists, available to the public on the Department's Internet Web site at the following address: *http://ia.ita.doc.gov/sunset/.* All submissions in these Sunset Reviews must be filed in accordance with the Department's regulations regarding format, translation, and service of documents. These rules can be found at 19 CFR 351.303.

This notice serves as a reminder that any party submitting factual information in an AD/CVD proceeding must certify to the accuracy and completeness of that information. *See* section 782(b) of the Act. Parties are hereby reminded that revised certification requirements are in effect for company/government officials as well as their representatives in all AD/CVD investigations or proceedings initiated on or after March 14, 2011. *See Certification of Factual Information to Import Administration During Antidumping and Countervailing Duty Proceedings: Interim Final Rule,* 76 FR 7491 (February 10, 2011) (''*Interim Final Rule*'') amending 19 CFR 351.303(g)(1) and (2). The formats for the revised certifications are provided at the end of the *Interim Final Rule.* The Department intends to reject factual submissions in investigations/proceedings initiated on or after March 14, 2011 if the submitting party does not comply with the revised certification requirements.

Pursuant to 19 CFR 351.103(d), the Department will maintain and make available a service list for these proceedings. To facilitate the timely preparation of the service list(s), it is requested that those seeking recognition as interested parties to a proceeding contact the Department in writing within 10 days of the publication of the Notice of Initiation.

Because deadlines in Sunset Reviews can be very short, we urge interested parties to apply for access to proprietary information under administrative protective order (''APO'') immediately following publication in the **Federal Register** of this notice of initiation by filing a notice of intent to participate. The Department's regulations on submission of proprietary information and eligibility to receive access to business proprietary information under APO can be found at 19 CFR 351.304–351.306.

Information Required From Interested Parties

Domestic interested parties defined in section 771(9)(C), (D), (E), (F), and (G) of the Act and 19 CFR 351.102(b) wishing to participate in a Sunset Review must respond not later than 15 days after the date of publication in the **Federal Register** of this notice of initiation by filing a notice of intent to participate. The required contents of the notice of intent to participate are set forth at 19 CFR 351.218(d)(1)(ii). In accordance with the Department's regulations, if we do not receive a notice of intent to participate from at least one domestic interested party by the 15-day deadline, the Department will automatically revoke the order without further review. *See* 19 CFR 351.218(d)(1)(iii).

If we receive an order-specific notice of intent to participate from a domestic interested party, the Department's regulations provide that *all parties* wishing to participate in the Sunset Review must file complete substantive responses not later than 30 days after the date of publication in the **Federal Register** of this notice of initiation. The required contents of a substantive

response, on an order-specific basis, are set forth at 19 CFR 351.218(d)(3). Note that certain information requirements differ for respondent and domestic parties. Also, note that the Department's information requirements are distinct from the Commission's information requirements. Please consult the Department's regulations for information regarding the Department's conduct of Sunset Reviews.[1] Please consult the Department's regulations at 19 CFR part 351 for definitions of terms and for other general information concerning antidumping and countervailing duty proceedings at the Department.

This notice of initiation is being published in accordance with section 751(c) of the Act and 19 CFR 351.218 (c).

Dated: July 21, 2011.

Christian Marsh,

Deputy Assistant Secretary for Antidumping and Countervailing Duty Operations.

[FR Doc. 2011–19402 Filed 7–29–11; 8:45 am]

BILLING CODE 3510–DS–P

[1] In comments made on the interim final sunset regulations, a number of parties stated that the proposed five-day period for rebuttals to substantive responses to a notice of initiation was insufficient. This requirement was retained in the final sunset regulations at 19 CFR 351.218(d)(4). As provided in 19 CFR 351.302(b), however, the Department will consider individual requests to extend that five-day deadline based upon a showing of good cause.

DEPARTMENT OF COMMERCE

National Oceanic and Atmospheric Administration

RIN 0648–XA600

Notice of Availability for a Finding of No Significant Impact and Environmental Assessment for Emergency Restoration of Seagrass Impacts From the Deepwater Horizon Oil Spill Response

AGENCY: National Marine Fisheries Service (NMFS), National Oceanic and Atmospheric Administration (NOAA), Commerce.

ACTION: Notice of availability; request for comments.

SUMMARY: Officials of the National Oceanic and Atmospheric Administration of the U.S. Department of Commerce (NOAA); U.S. Department of Interior; and the five states of Florida, Alabama, Mississippi, Louisiana and Texas are all designated, pursuant to section 1006(b) of the Oil Pollution Act of 1990 (OPA), as trustees (Trustees) for natural resources harmed by this Incident. NOAA is serving as the Lead Administrative Trustee (LAT) for this emergency seagrass restoration. Under the National Environmental Policy Act, an Environmental Assessment for Emergency Restoration of Seagrass Impacts from the Deepwater Horizon Oil Spill Response (EA) was completed by NOAA, and a Finding of No Significant Impact (FONSI) was signed on July 8, 2011.

DATES: Comments on this EA and FONSI must be received by August 16, 2011.

ADDRESSES: Submit comments to: Kay McGraw, NOAA Restoration Center, Rm 15862, 1315 East West Highway, Silver Spring, MD 20910; or electronically to *Kay.McGraw@noaa.gov.*

FOR FURTHER INFORMATION CONTACT: Patricia A. Montanio, 301–427–8600.

SUPPLEMENTARY INFORMATION: The purpose of this project is to address injuries to seagrass beds that resulted from Deepwater Horizon (DWH) oil spill response activities. The injuries were caused by motorized boats, and included propeller scars, blowholes from response vessels, and scouring from boom curtains and anchor tethers. The proposed action will restore damaged seagrass beds and decrease risk of secondary injury to nearby seagrass communities. The environmental review process led NOAA to conclude that this action will not have a significant effect on the human environment, therefore an environmental impact statement will not be prepared.

Section 990.26(d) of OPA requires the Trustees to provide notice to the public, to the extent practicable, of any planned emergency restoration actions. Trustees must also provide public notice of the justification for, nature and extent of, and results of emergency restoration actions within a reasonable time frame. NOAA is expediting regulatory clearance of this action due to the emergency nature of it. The Trustees believe the best method to address this requirement is to post a copy of the FONSI and EA on NOAA's Deepwater Horizon Web site at *http://www.gulfspillrestoration.noaa.gov/.* The documents will be available there on August 1, 2011.

NOAA believes it is important to undertake the restoration immediately in order to minimize the possibility of further adverse sea grass impacts that may occur in the absence of immediate action, such as secondary damage that may result from storms or other events. NOAA will accept public comments on this EA and FONSI until August 16, 2011. All comments will be fully considered and included in the administrative record for this action.

Dated: July 26, 2011.

Brian Pawlak,

Acting Director, Office of Habitat Conservation, National Marine Fisheries Service.

[FR Doc. 2011–19403 Filed 7–29–11; 8:45 am]

BILLING CODE 3510–22–P

DEPARTMENT OF COMMERCE

National Oceanic and Atmospheric Administration

RIN 0648–XA609

South Atlantic Fishery Management Council; Public Hearings

AGENCY: Commerce, National Oceanic and Atmospheric Administration, National Marine Fisheries Service (NMFS).

ACTION: Notice of Public Hearing Series.

SUMMARY: The South Atlantic Fishery Management Council (Council) will hold a series of public hearings regarding Amendment 24 to the Snapper Grouper Fishery Management Plan (FMP) for the South Atlantic Region. See **SUPPLEMENTARY INFORMATION** for the public hearings schedule.

DATES: The series of four public hearings will be held August 22, 2011 through August 25, 2011. The hearings will be held from 5 p.m. until 7 p.m. Council staff will present an overview of the amendment and will be available for informal discussions and to answer questions. Members of the public will have an opportunity to go on record at any time during the meeting hours to record their comments on the public hearing topics for consideration by the Council. Local Council representatives will attend the meetings and take public comment. Written comments will be accepted from August 12, 2011 until 5 p.m. on September 1, 2011. See **SUPPLEMENTARY INFORMATION**.

ADDRESSES: Written comments should be sent to Bob Mahood, Executive Director, South Atlantic Fishery Management Council, 4055 Faber Place Drive, Suite 201, North Charleston, SC 29405, or via e-mail to: *SGAmend24PHcomment@safmc.net* for Amendment 24 to the Snapper Grouper FMP. Written comments will be received from August 12, 2011 until 5 p.m. on September 1, 2011.

Copies of the public hearing documents are available by contacting Kim Iverson, Public Information Officer,

South Atlantic Fishery Management Council, 4055 Faber Place Drive, Suite 201, North Charleston, SC 29405; telephone: (843) 571–4366 or toll free at (866) SAFMC–10. Copies will also be available online at *http://www.safmc.net* as they become available.

FOR FURTHER INFORMATION CONTACT: Kim Iverson, South Atlantic Fishery Management Council, 4055 Faber Place Drive, Suite 201, North Charleston, SC 29405; *telephone:* (843) 571–4366; *fax:* (843) 769–4520; *e-mail address: kim.iverson@safmc.net.*

SUPPLEMENTARY INFORMATION: Amendment 24 to the Snapper Grouper FMP would implement a rebuilding plan for red grouper in the South Atlantic as required by the Magnuson-Stevens Fishery Conservation and Management Act (Magnuson-Stevens Act) for species determined to be overfished and undergoing overfishing. The intent of the rebuilding plan is to end overfishing immediately and increase biomass of overfished stocks to a sustainable level within a specified period of time. The amendment would also specify Maximum Sustainable Yield (MSY), the Maximum Fishing Mortality Threshold (MSST), and Optimum Yield (OY) for the red grouper fishery. In addition, Annual Catch Limits (ACLs) and Accountability Measures (AMs) would be established for both recreational and commercial sectors of the red grouper fishery.

Public Hearing Schedule:

(1) August 22, 2011—Hilton Wilmington Riverside, 301 North Water Street, Wilmington, NC 28401; *Phone:* (910) 763–5900;

(2) August 23, 2011—Hilton Garden Inn, 5265 International Boulevard, North Charleston, SC 29418; *Phone:* (843) 308–9330;

(3) August 24, 2011—Jacksonville Marriott, 4670 Salisbury Road, Jacksonville, FL 32256; *Phone:* (904) 296–2222;

(4) August 25, 2011—Radisson Resort at the Port, 8701 Astronaut Boulevard, Cape Canaveral, FL 32920; *Phone:* (321) 784–0000.

Special Accommodations

These meetings are physically accessible to people with disabilities. Requests for sign language interpretation or other auxiliary aids should be directed to the Council office (see **ADDRESSES**) three days prior to the start of each meeting.

Dated: July 26, 2011.

Tracey L. Thompson,

Acting Director, Office of Sustainable Fisheries, National Marine Fisheries Service.

[FR Doc. 2011–19309 Filed 7–29–11; 8:45 am]

BILLING CODE 3510–22–P

DEPARTMENT OF COMMERCE

National Oceanic and Atmospheric Administration

RIN 0648–XA573

Atlantic Highly Migratory Species; Meeting of the Atlantic Highly Migratory Species Advisory Panel

AGENCY: National Marine Fisheries Service (NMFS), National Oceanic and Atmospheric Administration (NOAA), Commerce.

ACTION: Notice of public meeting.

SUMMARY: NMFS will hold a 3-day Atlantic Highly Migratory Species (HMS) Advisory Panel (AP) meeting in September 2011. The intent of the meeting is to consider options for the conservation and management of Atlantic HMS. The meeting is open to the public.

DATES: The AP meeting will be held Sept. 20, 2011, through Sept. 22, 2011.

ADDRESSES: The meeting will be held in Silver Spring, MD 20910.

FOR FURTHER INFORMATION CONTACT: Brian Parker or Margo Schulze-Haugen at (301) 427–8503.

SUPPLEMENTARY INFORMATION: The Magnuson-Stevens Fishery Conservation and Management Act, 16 U.S.C. 1801 *et seq.,* as amended by the Sustainable Fisheries Act, Public Law 104–297, provided for the establishment of an AP to assist in the collection and evaluation of information relevant to the development of any Fishery Management Plan (FMP) or FMP amendment for Atlantic HMS. NMFS consults with and considers the comments and views of AP members when preparing and implementing FMPs or FMP amendments for Atlantic tunas, swordfish, billfish, and sharks.

The AP has previously consulted with NMFS on: Amendment 1 to the Billfish FMP (April 1999); the HMS FMP (April 1999); Amendment 1 to the HMS FMP (December 2003); the Consolidated HMS FMP (October 2006); Amendments 1, 2, and 3 to the Consolidated HMS FMP (April and October 2008, February and September 2009, and May 2010); an Advanced Notice of the Proposed Rule (ANPR) for the future management of the shark fishery (September 2010) and the ANPR for Atlantic HMS published June 2009 (September 2010); and a proposed rule to allow retention of swordfish caught by squid trawl vessels (April 2011), among other things.

At the September 2011 AP meeting, NMFS plans to discuss Atlantic bluefin tuna management, revitalizing the swordfish fishery, the Future of the Shark Fishery, other shark fishery management issues, and items contained in the Advanced Notice of Proposed Rulemaking that published June 1, 2009 (74 FR 26174). The meeting may also continue discussions on the implementation of 2010 International Commission for the Conservation of Atlantic Tunas measures, an update on the recreational action plan for Atlantic HMS, permitting and management options for swordfish and smoothhound sharks in trawl fisheries, electronic dealer reporting, vessel monitoring systems, and monitoring methods for HMS fisheries. NMFS also plans to hold a shark catch share workshop for interested fishermen after the AP meeting. Information on the venue and agenda will be provided at a later date.

Special Accommodations

This meeting is physically accessible to people with disabilities. Requests for sign language interpretation or other auxiliary aids should be directed to Brian Parker at (301) 427–8503 at least 7 days prior to the meeting.

Dated: July 26, 2011.

Margo Schulze-Haugen,

Acting Director, Office of Sustainable Fisheries, National Marine Fisheries Service.

[FR Doc. 2011–19401 Filed 7–29–11; 8:45 am]

BILLING CODE 3510–22–P

DEPARTMENT OF COMMERCE

National Oceanic and Atmospheric Administration

RIN 0648–XA601

Endangered Species; File No. 15552

AGENCY: National Marine Fisheries Service (NMFS), National Oceanic and Atmospheric Administration (NOAA), Commerce.

ACTION: Issuance of permit.

SUMMARY: Notice is hereby given that the National Marine Fisheries Service Southeast Fisheries Science Center (SEFSC) [Dr. Bonnie Ponwith, Responsible Party] has been issued a permit to take green (*Chelonia mydas*), hawksbill (*Eretmochelys imbricata*), loggerhead (*Caretta caretta*), Kemp's ridley (*Lepidochelys kempii*), olive ridley (*Lepidochelys olivacea*), leatherback (*Dermochelys coriacea*), and

unidentified hardshell sea turtles for the purposes of scientific research.

ADDRESSES: The permit and related documents are available for review upon written request or by appointment in the following offices:

Permits, Conservation and Education Division, Office of Protected Resources, NMFS, 1315 East-West Highway, Room 13705, Silver Spring, MD 20910; phone (301) 427–8401; fax (301) 713–0376; and

Southeast Region, NMFS, 263 13th Ave. South, St. Petersburg, FL 33701; phone (727) 824–5312; fax (727) 824–5309.

FOR FURTHER INFORMATION CONTACT: Colette Cairns or Amy Hapeman, (301) 427–8401.

SUPPLEMENTARY INFORMATION: On January 26, 2011, notice was published in the **Federal Register** (76 FR 4636) that a request for a scientific research permit to take green, loggerhead, hawksbill, leatherback, Kemp's ridley, olive ridley, and unidentified hardshell sea turtles had been submitted by the above-named organization. The requested permit has been issued under the authority of the Endangered Species Act of 1973, as amended (ESA; 16 U.S.C. 1531 *et seq.*) and the regulations governing the taking, importing, and exporting of endangered and threatened species (50 CFR parts 222–226).

The five-year permit authorizes the SEFSC to monitor the take of green, loggerhead, hawksbill, leatherback, Kemp's ridley, olive ridley, and unidentified hardshell sea turtles by observed commercial fisheries and collect data to estimate bycatch and its effects on sea turtle sub-populations. SEFSC-certified observers are authorized to handle, photograph, measure, weigh, flipper and passive integrated transponder tag, tissue sample, carapace mark and salvage specimens taken during commercial fishing activities. The research will take place in the Atlantic Ocean, the Gulf of Mexico, the Caribbean Sea, and their tributaries. These efforts would aid in the development and refinement of management efforts to recover these species.

Issuance of this permit, as required by the ESA, was based on a finding that such permit (1) was applied for in good faith, (2) will not operate to the disadvantage of such endangered or threatened species, and (3) is consistent with the purposes and policies set forth in section 2 of the ESA.

Dated: July 26, 2011.

P. Michael Payne,

Chief, Permits, Conservation and Education Division, Office of Protected Resources, National Marine Fisheries Service.

[FR Doc. 2011–19399 Filed 7–29–11; 8:45 am]

BILLING CODE 3510–22–P

COMMITTEE FOR PURCHASE FROM PEOPLE WHO ARE BLIND OR SEVERELY DISABLED

Information Collection Submitted to the Office of Management and Budget (OMB) for Approval Under the Paperwork Reduction Act; Nonprofit Agency Recordkeeping Requirements

AGENCY: Committee for Purchase From People Who Are Blind or Severely Disabled.

ACTION: Notice; request for comments.

SUMMARY: The Committee for Purchase From People Who Are Blind or Severely Disabled (The Committee) is submitting the collection of information listed below to OMB for approval under the provisions of the Paperwork Reduction Act. This notice solicits comments on that collection of information.

DATES: The Office of Management and Budget (OMB) has up to 60 days to approve or disapprove information collection but may respond after 30 days. Therefore, to ensure maximum consideration, your comments should be received by OMB by August 28, 2011.

ADDRESSES: Written comments should be addressed to the Office of Information and Regulatory Affairs, Attention: Desk Officer for the Committee for Purchase from People Who Are Blind or Severely Disabled, Office of Management and Budget, 725 17th Street, NW., Room 10222, Washington, DC 20503. Commenters are encouraged to submit responses electronically by e-mail to *oira_submission@omb.eop.gov* or via fax to (202) 395–6974. Commenters should include the following subject line in their response: ''Comment: 3037–0005 Nonprofit Agency Responsibilities.'' Persons submitting comments electronically should not submit paper copies.

FOR FURTHER INFORMATION CONTACT: Louis Bartalot, Director of Compliance, Committee for Purchase From People Who Are Blind or Severely Disabled, 1421 Jefferson Davis Highway, Jefferson Plaza 2, Suite 10800, Arlington, VA 22202–3259; phone (703) 603–2124; fax (703) 603–0655; or e-mail *rulescomment@abilityone.gov.*

SUPPLEMENTARY INFORMATION: The Office of Management and Budget (OMB) Regulations at 5 CFR part 1320, which implement provisions of the Paperwork Reduction Act of 1995 (44 U.S.C. 3501 *et seq.*), require that interested members of the public and affected agencies have an opportunity to comment on information collection and recordkeeping activities (see 5 CFR 1320.8(d)). The Committee plans to submit a request to OMB to renew its approval of the collection of information for nonprofit agency responsibilities related to recordkeeping. The Committee is requesting a 3-year term of approval for this information collection activity.

Federal agencies may not conduct or sponsor, and a person is not required to respond to, a collection of information unless it displays a currently valid OMB control number. The OMB control number for this collection of information is 3037–0005.

The Javits-Wagner-O'Day (JWOD) Act of 1971 (41 U.S.C. 46–48c) is the authorizing legislation for the AbilityOne Program. The AbilityOne Program creates jobs and training opportunities for people who are blind or who have other severe disabilities. Its primary means of doing so is by requiring Government agencies to purchase selected products and services from nonprofit agencies employing such individuals. The AbilityOne Program is administered by the Committee. Two national, independent organizations, National Industries for the Blind (NIB) and NISH, help state and private nonprofit agencies participate in the AbilityOne Program.

The implementing regulations for the JWOD Act, which are located at 41 CFR Chapter 51, detail the recordkeeping requirements imposed on nonprofit agencies participating in the AbilityOne Program. Section 51–2.4 of the regulations describes the criteria that the Committee must consider when adding a product or service to its Procurement List. One of these criteria is that a proposed addition must demonstrate a potential to generate employment for people who are blind or severely disabled. The Committee decided that evidence that employment will be generated for those individuals consists of recordkeeping that tracks direct labor and revenues for products or services sold through an AbilityOne Program contract. This recordkeeping can be done on each individual AbilityOne project or by product or service family.

In addition, Section 51–4.3 of the regulations requires that nonprofit agencies keep records on direct labor

hours performed by each worker and keep an individual record or file for each individual who is blind or severely disabled, documenting that individual's disability and capabilities for competitive employment. The records that nonprofit agencies must keep in accordance with Section 51–4.3 of the regulations constitute the bulk of the hour burden associated with this OMB control number.

This information collection renewal request seeks approval for the Committee to continue to ensure compliance with recordkeeping requirements established by the authority of the JWOD Act and set forth in the Act's implementing regulations and to ensure that the Committee has the ability to confirm the suitability of products and services on its Procurement List. The recordkeeping requirements described in this document are the same as those currently imposed on nonprofit agencies participating in the AbilityOne Program.

Title: Nonprofit Agency Responsibilities, 41 CFR 51–2.4 and 51–4.3.

OMB Control Number: 3037–0005.

Description of Collection: Recordkeeping.

Description of Respondents: Nonprofit agencies participating in the AbilityOne Program.

Annual Number of Respondents: About 625 nonprofit agencies will annually participate in recordkeeping.

Total Annual Burden Hours: The recordkeeping burden is estimated to average 567 hours per respondent. Total annual burden is 354,375 hours.

On May 17, 2011, we published in the **Federal Register** (Volume 76 Number 95, Pages 28424–28425) a notice requesting public comment on these recordkeeping requirements for 60 days, ending July 17, 2011. By that date we had received no comments.

Patricia Briscoe,

Deputy Director, Business Operations (Pricing and Information Management).

[FR Doc. 2011–19379 Filed 7–29–11; 8:45 am]

BILLING CODE 6353–01–P

DEPARTMENT OF DEFENSE

Office of the Secretary

Missile Defense Advisory Committee; Notice of Closed Meeting

AGENCY: Department of Defense; Missile Defense Agency (MDA).

ACTION: Notice of closed meeting.

SUMMARY: Under the provisions of the Federal Advisory Committee Act of 1972 (5 U.S.C., Appendix, as amended) and the Government in the Sunshine Act of 1976 (5 U.S.C. 552b, as amended) and 41 CFR 102–3.150, the Department of Defense announces that the following Federal advisory committee meeting of the Missile Defense Advisory Committee will take place.

DATES: Tuesday, August 16, 2011 through Thursday, August 18, 2011 from 8 a.m. to 5:30 p.m. each day. Security clearance and visit requests are required for access.

ADDRESSES: 5700 18th Street, Building 245, Fort Belvoir, Virginia 22060–5573.

FOR FURTHER INFORMATION CONTACT: Mr. David Bagnati, Designated Federal Officer at *MDAC@mda.mil,* phone/voice mail 571–231–8113, or mail at 5700 18th Street, Building 245, Fort Belvoir, Virginia 22060–5573.

SUPPLEMENTARY INFORMATION:

Purpose of the Meeting: At this meeting, the Committee will receive classified information on Directed Energy.

Agenda: Topics tentatively scheduled for classified discussion include, but are not limited to briefings on Ballistic Missile Defense System Architecture and Laser Systems Concepts; United States European Phased Adaptive Approach; Ballistic Missile Defense Strategic Issues; Annual Ethics Training; Annual Security Refresher; Missile Defense Advisory Committee Executive Session; and Missile Defense Advisory Committee preliminary outbrief to the Director, Missile Defense Agency.

Meeting Accessibility: Pursuant to 5 U.S.C. 552b, as amended, and 41 CFR 102–3.155 the Missile Defense Agency has determined that the meeting shall be closed to the public. The Director, Missile Defense Agency, in consultation with the Missile Defense Agency Office of General Counsel, has determined in writing that the public interest requires that all sessions of the committee's meeting will be closed to the public because they will be concerned with classified information and matters covered by 5 U.S.C. 552b(c)(1).

Committee's Designated Federal Officer: Mr. David Bagnati, *MDAC@mda.mil,* phone/voice mail 571–231–8113, or mail at 5700 18th Street, Building 245, Fort Belvoir, Virginia 22060–5573. Pursuant to 41 CFR 102–3.105(j) and 102–3.140, and section 10(a)(3) of the Federal Advisory Committee Act of 1972, the public or interested organizations may submit written statements to the membership of the Missile Defense Advisory Committee about its mission and functions. Written statements may be submitted at any time or in response to the stated agenda of a planned meeting of the Missile Defense Advisory Committee.

All written statements shall be submitted to the Designated Federal Officer for the Missile Defense Advisory Committee, in the following formats: One hard copy with original signature and one electronic copy via e-mail (acceptable file formats: Adobe Acrobat PDF, MS Word or MS PowerPoint), and this individual will ensure that the written statements are provided to the membership for their consideration. Contact information for the Designated Federal Officer is as stated above and can also be obtained from the GSA's Federal Advisory Committee Act Database—*https://www.fido.gov/facadatabase/public.asp.*

Statements being submitted in response to the agenda mentioned in this notice must be received by the Designated Federal Officer at the address listed at least five calendar days prior to the meeting which is the subject of this notice. Written statements received after this date may not be provided to or considered by the Missile Defense Advisory Committee until its next meeting. The Designated Federal Officer will review all timely submissions with the Missile Defense Advisory Committee Chairperson and ensure they are provided to all members of the Missile Defense Advisory Committee before the meeting that is the subject of this notice.

Dated: July 26, 2011.

Aaron Siegel,

Alternate OSD Federal Register Liaison Officer, Department of Defense.

[FR Doc. 2011–19395 Filed 7–29–11; 8:45 am]

BILLING CODE 5001–06–P

DEPARTMENT OF DEFENSE

Department of the Army

[Docket ID USA–2011–0018]

Privacy Act of 1974; System of Records

AGENCY: Department of the Army, DoD.

ACTION: Notice to amend a system of records.

SUMMARY: The Department of the Army is proposing to amend a system of records notice in its existing inventory of records systems subject to the Privacy Act of 1974, (5 U.S.C. 552a), as amended.

DATES: The changes will be effective on August 31, 2011 unless comments are received that would result in a contrary determination.

ADDRESSES: You may submit comments, identified by docket number and title, by any of the following methods:

* *Federal Rulemaking Portal: http://www.regulations.gov*. Follow the instructions for submitting comments.

* *Mail*: Federal Docket Management System Office, 1160 Defense Pentagon, Washington, DC 20301–1160.

Instructions: All submissions received must include the agency name and docket number for this Federal Register document. The general policy for comments and other submissions from members of the public is to make these submissions available for public viewing on the Internet at *http://www.regulations.gov* as they are received without change, including any personal identifiers or contact information.

FOR FURTHER INFORMATION CONTACT: Mr. Leroy Jones, Department of the Army, Privacy Office, U.S. Army Records Management and Declassification Agency, 7701 Telegraph Road, Casey Building, Suite 144, Alexandria, VA 22325–3905, or by phone at (703) 428–6185.

SUPPLEMENTARY INFORMATION: The Department of the Army systems of records notices subject to the Privacy Act of 1974, (5 U.S.C. 552a), as amended, have been published in the **Federal Register** and are available from the address in **FOR FURTHER INFORMATION CONTACT**.

The specific changes to the records systems being amended are set forth below followed by the notices, as amended, published in their entirety. The proposed amendments are not within the purview of subsection (r) of the Privacy Act of 1974, (5 U.S.C. 552a), as amended, which requires the submission of a new or altered system report.

Dated: July 27, 2011.

Aaron Siegel,

Alternate OSD Federal Register Liaison Officer, Department of Defense.

A0195–2b USACIDC

SYSTEM NAME:

Criminal Investigation and Crime Laboratory Files (August 5, 2002, 67 FR 50653).

* * * * *

SYSTEM LOCATION:

Delete entry and replace with ''Headquarters, U.S. Army Criminal Investigation Command, 27130 Telegraph Road, Quantico, VA 22134–2253.

Segments exist at subordinate U.S. Army Criminal Investigation Command elements. Addresses may be obtained from the Commander, U.S. Army Criminal Investigation Command, 27130 Telegraph Road, Quantico, VA 22134–2253.

An automated index of cases is maintained at the U.S. Army Crime Records Center, U.S. Army Criminal Investigation Command, 27130 Telegraph Road, Quantico, VA 22134–2253.''

* * * * *

SYSTEM MANAGER(S) AND ADDRESS:

Delete entry and replace with ''Commander, Headquarters, U.S. Army Criminal Investigation Command, 27130 Telegraph Road, Quantico, VA 22134–2253.''

NOTIFICATION PROCEDURE:

Delete entry and replace with ''Individuals seeking to determine whether information about themselves is contained in this system should address written inquiries to the Director, U.S. Army Crime Records Center, U.S. Army Criminal Investigation Command, ATTN: CICR–FP, 27130 Telegraph Road, Quantico, VA 22134–2253.

For verification purposes, individual should provide the full name, date and place of birth, current address, telephone numbers, and signature.''

RECORD ACCESS PROCEDURES:

Delete entry and replace with ''Individual seeking access to information about themselves contained in this system should address written inquiries to the Director, U.S. Army Crime Records Center, U.S. Army Criminal Investigation Command, ATTN: CICR–FP, 27130 Telegraph Road, Quantico, VA 22134–2253.

For verification purposes, individual should provide the full name, date and place of birth, current address, telephone numbers, and signature.''

* * * * *

A0195–2b USACIDC

SYSTEM NAME:

Criminal Investigation and Crime Laboratory Files.

SYSTEM LOCATION:

Headquarters, U.S. Army Criminal Investigation Command, 27130 Telegraph Road, Quantico, VA 22134–2253.

Segments exist at subordinate U.S. Army Criminal Investigation Command elements. Addresses may be obtained from the Commander, U.S. Army Criminal Investigation Command, 27130 Telegraph Road, Quantico, VA 22134–2253.

An automated index of cases is maintained at the U.S. Army Crime Records Center, U.S. Army Criminal Investigation Command, 27130 Telegraph Road, Quantico, VA 22134–2253.

CATEGORIES OF INDIVIDUALS COVERED BY THE SYSTEM:

Any individual, civilian or military, involved in, witnessing or suspected of being involved in or reporting possible criminal activity affecting the interests, property, and/or personnel of the U.S. Army.

CATEGORIES OF RECORDS IN THE SYSTEM:

Name, Social Security Number, rank, date and place of birth, chronology of events; reports of investigation and criminal intelligence reports containing statements of witnesses, suspects, subject and agents; laboratory reports, polygraph reports, documentary evidence, physical evidence, summary and administrative data pertaining to preparation and distribution of the report; basis for allegations; Serious or Sensitive Incident Reports, modus operandi and other investigative information from Federal, State, and local investigative and intelligence agencies and departments; similar relevant documents. Indices contain codes for the type of crime, location of investigation, year and date of offense, names and personal identifiers of persons who have been subjects of electronic surveillance, suspects, subjects and victims of crimes, report number which allows access to records noted above; agencies, firms, Army and Defense Department organizations which were the subjects or victims of criminal investigations; and disposition and suspense of offenders listed in criminal investigative case files, witness identification data.

AUTHORITY FOR MAINTENANCE OF THE SYSTEM:

10 U.S.C. 3013, Secretary of the Army; Army Regulation 195–2, Criminal Investigation Activities; 42 U.S.C. 10606 et seq.; DoD Directive 1030.1, Victim and Witness Assistance; and E.O. 9397 (SSN), as amended.

PURPOSE(S):

To conduct criminal investigations, crime prevention and criminal intelligence activities; to accomplish management studies involving the analysis, compilation of statistics, quality control, etc., to ensure that completed investigations are legally sufficient and result in overall improvement in techniques, training and professionalism. Includes personnel security, internal security, criminal, and other law enforcement matters, all of

which are essential to the effective operation of the Department of the Army.

The records in this system are used for the following purposes: Suitability for access or continued access to classified information; suitability for promotion, employment, or assignment; suitability for access to military installations or industrial firms engaged in government projects/contracts; suitability for awards or similar benefits; use in current law enforcement investigation or program of any type including applicants; use in judicial or adjudicative proceedings including litigation or in accordance with a court order; advising higher authorities and Army commands of the important developments impacting on security, good order or discipline; reporting of statistical data to Army commands and higher authority; input into the Defense Security Service managed Defense Clearance and Investigations Index (DCII) database under system notice V5–02.

ROUTINE USES OF RECORDS MAINTAINED IN THE SYSTEM, INCLUDING CATEGORIES OF USERS AND THE PURPOSES OF SUCH USES:

In addition to those disclosures generally permitted under 5 U.S.C. 552a(b) of the Privacy Act of 1974, these records contained therein may specifically be disclosed outside the DoD as a routine use pursuant to 5 U.S.C. 552a(b)(3) as follows:

Information concerning criminal or possible criminal activity is disclosed to Federal, State, local and/or foreign law enforcement agencies in accomplishing and enforcing criminal laws; analyzing modus operandi, detecting organized criminal activity, or criminal justice employment. Information may also be disclosed to foreign countries under the provisions of the Status of Forces Agreements, or Treaties.

To the Department of Veterans Affairs to verify veterans claims. Criminal investigative files may be used to adjudicate veteran claims for disability benefits, post dramatic stress disorder, and other veteran entitlements.

To Federal, state, and local agencies to comply with the Victim and Witness Assistance Program and the Victims' Rights and Restitution Act of 1990, when the agency is requesting information on behalf of the individual.

To Federal, state, and local law enforcement agencies and private sector entities for the purposes of complying with mandatory background checks, i.e., Brady Handgun Violence Prevention Act (18 U.S.C. 922) and the National Child Protection Act of 1993 (42 U.S.C. 5119 *et seq.*).

To Federal, state, and local child protection services or family support agencies for the purpose of providing assistance to the individual.

To victims and witnesses of a crime for purposes of providing information, consistent with the requirements of the Victim and Witness Assistance Program, regarding the investigation and disposition of an offense.

To the Immigration and Naturalization Service, Department of Justice, for use in alien admission and naturalization inquiries conducted under Section 105 of the Immigration and Naturalization Act of 1952, as amended.

The DoD 'Blanket Routine Uses' set forth at the beginning of the Army's compilation of systems of records notices also apply to this system.

POLICIES AND PRACTICES FOR STORING, RETRIEVING, ACCESSING, RETAINING, AND DISPOSING OF RECORDS IN THE SYSTEM:

STORAGE:

Paper records in file folders and on electronic media.

RETRIEVABILITY:

By name or other identifier of individual.

SAFEGUARDS:

Access is limited to designated authorized individuals having official need for the information in the performance of their duties. Buildings housing records are protected by security guards.

RETENTION AND DISPOSAL:

Reports of Investigation: At Headquarters, U.S. Army Criminal Investigation Command (USACIDC), criminal investigative case files are retained for 40 years after final action, except that at USACIDC subordinate elements, such files are retained from 1 to 5 years depending on the level of such unit and the data involved.

Laboratory Reports: Laboratory reports at the USACIDC laboratory are destroyed after 5 years.

Criminal Intelligence Reports: At Headquarters, USACIDC Intelligence Division criminal intelligence reports are destroyed when no longer needed. Except reports containing information of current operation value may be kept and reviewed yearly for continued retention, not to exceed 20 years. Group headquarters destroy after 5 years. District and field office elements destroy after 3 years or when no longer needed.

SYSTEM MANAGER(S) AND ADDRESS:

Commander, Headquarters, U.S. Army Criminal Investigation Command, 27130 Telegraph Road, Quantico, VA 22134–2253.

NOTIFICATION PROCEDURE:

Individuals seeking to determine whether information about themselves is contained in this system should address written inquiries to the Director, U.S. Army Crime Records Center, U.S. Army Criminal Investigation Command, ATTN: CICR–FP, 27130 Telegraph Road, Quantico, VA 22134–2253.

For verification purposes, individual should provide the full name, date and place of birth, current address, telephone numbers, and signature.

RECORD ACCESS PROCEDURES:

Individual seeking access to information about themselves contained in this system should address written inquiries to the Director, U.S. Army Crime Records Center, U.S. Army Criminal Investigation Command, ATTN: CICR–FP, 27130 Telegraph Road, Quantico, VA 22134–2253.

For verification purposes, individual should provide the full name, date and place of birth, current address, telephone numbers, and signature.

CONTESTING RECORD PROCEDURES:

The Army's rules for accessing records, and for contesting contents and appealing initial agency determinations are contained in Army Regulation 340–21; 32 CFR part 505; or may be obtained from the system manager.

RECORD SOURCE CATEGORIES:

Suspects, witnesses, victims, USACIDC special agents and other personnel, informants; various Department of Defense, federal, state, and local investigative agencies; departments or agencies of foreign governments; and any other individual or organization which may supply pertinent information.

EXEMPTIONS CLAIMED FOR THE SYSTEM:

Parts of this system may be exempt pursuant to 5 U.S.C. 552a(j)(2) if the information is compiled and maintained by a component of the agency which performs as its principle function any activity pertaining to the enforcement of criminal laws.

An exemption rule for this system has been promulgated in accordance with requirements of 5 U.S.C. 553(b)(1), (2), and (3), (c) and (e) and published in 32 CFR part 505. For additional information contact the system manager.

[FR Doc. 2011–19364 Filed 7–29–11; 8:45 am]

BILLING CODE 5001–06–P

DEPARTMENT OF ENERGY

Advanced Scientific Computing Advisory Committee; Meeting

AGENCY: Office of Science, Department of Energy.

ACTION: Notice of open meeting.

SUMMARY: This notice announces a meeting of the Advanced Scientific Computing Advisory Committee (ASCAC). Federal Advisory Committee Act (Pub. L. 92–463, 86 Stat. 770) requires that public notice of these meetings be announced in the **Federal Register**

DATES: Tuesday, August 23, 2011, 9 a.m.–5 p.m.

Wednesday, August 24, 2011, 9 a.m.–12 p.m.

ADDRESSES: Hilton Washington DC/Rockville Hotel & Executive Meeting Center, 1750 Rockville Pike, Rockville, Maryland 20852.

FOR FURTHER INFORMATION CONTACT: Melea Baker, Office of Advanced Scientific Computing Research; SC–21/Germantown Building; U.S. Department of Energy; 1000 Independence Avenue, SW.; Washington, DC 20585–1290; Telephone (301) 903–7486.

SUPPLEMENTARY INFORMATION:

Purpose of the Meeting: The purpose of this meeting is to provide advice and guidance to the Department of Energy on scientific priorities within the field of advanced scientific computing research.

Tentative Agenda Topics

- ASCR program updates.
- EU Data Initiative.
- HPC & EERE Wind Program.
- Early Career Research on Energy Efficient Interconnect for Exascale Computing.
- Separating Algorithm and Implentation.
- Update on ASCR exascale planning & workshops.
- Update on ASCAC COV.
- Update on CSGF Review.
- Public Comment (10-minute rule).

Public Participation: The meeting is open to the public. A webcast of this meeting may be available. Please check the Web site below for updates and information on how to view the meeting. If you would like to file a written statement with the Committee, you may do so either before or after the meeting. If you would like to make oral statements regarding any of the items on the agenda, you should contact Melea Baker by telephone at (301) 903–7486 or by e-mail at *Melea.Baker@science.doe.gov.* You must make your request for an oral statement at least five business days prior to the meeting. Reasonable provision will be made to include the scheduled oral statements on the agenda. The Chairperson of the Committee is empowered to conduct the meeting in a manner that will facilitate the orderly conduct of business. Public comment will follow the 10-minute rule.

Minutes: The minutes of this meeting will be available on the U.S. Department of Energy's Office of Advanced Scientific Computing Web site for viewing at *http://www.sc.doe.gov/ascr.*

Issued at Washington, DC on July 26, 2011.

LaTanya Butler,

Acting Deputy Committee Management Officer.

[FR Doc. 2011–19439 Filed 7–29–11; 8:45 am]

BILLING CODE 6450–01–P

DEPARTMENT OF ENERGY

Office of Energy Efficiency and Renewable Energy

[Docket Number EERE–2011–BT–NOA–0039]

Proposed Agency Information Collection

AGENCY: Office of Energy Efficiency and Renewable Energy, U.S. Department of Energy.

ACTION: Notice and request for comments.

SUMMARY: The Department of Energy (DOE) invites public comment on a proposed collection of information that DOE is developing for submission to the Office of Management and Budget (OMB) pursuant to the Paperwork Reduction Act of 1995. Comments are invited on: (a) whether the proposed collection of information is necessary for the proper performance of the functions of the agency, including whether the information shall have practical utility; (b) the accuracy of the agency's estimate of the burden of the proposed collection of information, including the validity of the methodology and assumptions used; (c) ways to enhance the quality, utility, and clarity of the information to be collected; and (d) ways to minimize the burden of the collection of information on respondents, including through the use of automated collection techniques or other forms of information technology.

DATES: Comments regarding this proposed information collection must be received on or before September 30, 2011. If you anticipate difficulty in submitting comments within that period, contact the person listed in **ADDRESSES** as soon as possible.

ADDRESSES: Written comments may be sent to Mr. Alan Schroeder, U.S. Department of Energy, Office of Energy Efficiency and Renewable Energy, Building Technologies Program, EE–2J, 1000 Independence Avenue, SW., Washington, DC 20585–0121, or by fax at 202–287–1830, or by e-mail at *TechID-RFI-2011-NOA-0039@ee.doe.gov.*

FOR FURTHER INFORMATION CONTACT: Requests for additional information or copies of the information collection instrument and instructions should be directed to Mr. Alan Schroeder, U.S. Department of Energy, Office of Energy Efficiency and Renewable Energy, Building Technologies Program, EE–2J, 1000 Independence Avenue SW., Washington, DC 20585–0121, *Alan.Schroeder@ee.doe.gov, http://apps1.eere.energy.gov/buildings/alliances/cfm/tech_nomination_form.html.*

SUPPLEMENTARY INFORMATION: This information collection request contains: (1) *OMB No.* New; (2) *Information Collection Request Title:* Commercial Buildings Technology Evaluation Process Data Collection; (3) *Type of Request:* New; (4) *Purpose:* The collected information is needed to perform energy use evaluations of emerging and underutilized energy efficient commercial building technologies. The results of these evaluations will promote the market adoption of more energy efficient technologies in commercial building applications and will potentially prevent the duplication of technology evaluation efforts among stakeholders. (5) *Annual Estimated Number of Respondents:* 100; (6) *Annual Estimated Number of Total Responses:* 100; (7) *Annual Estimated Number of Burden Hours:* 25; (8) *Annual Estimated Reporting and Recordkeeping Cost Burden:* $1000.

Statutory Authority: Section 421(c) of the Energy Independence and Security Act, codified at 42 U.S.C. 17081(c).

Issued in Washington, DC, on July 26, 2011.

Kathleen B. Hogan,

Deputy Assistant Secretary for Energy Efficiency, Office of Technology Development, Energy Efficiency and Renewable Energy.

[FR Doc. 2011–19437 Filed 7–29–11; 8:45 am]

BILLING CODE 6450–01–P

DEPARTMENT OF ENERGY

Federal Energy Regulatory Commission

Combined Notice of Filings #1

Take notice that the Commission received the following electric corporate filings:

Docket Numbers: EC11–97–000.
Applicants: J.P. Morgan Ventures Energy Corporation, Morgan Stanley Capitol Group Inc.
Description: Joint Section 203 Application of J.P. Morgan Ventures Energy Corporation and Morgan Stanley Capital Group.
Filed Date: 07/22/2011.
Accession Number: 20110722–5173.
Comment Date: 5 p.m. Eastern Time on Friday, August 12, 2011.

Take notice that the Commission received the following electric rate filings:

Docket Numbers: ER10–2042–001; ER10–1942–001; ER10–1941–001; ER10–1938–001; ER10–1888–001; ER10–1885–001; ER10–1884–001; ER10–1883–001; ER10–1878–001; ER10–1876–001; ER10–1875–001; ER10–1873–001; ER10–1947–001; ER10–1864–001; ER10–1862–001; ER10–1865–001.
Applicants: Calpine Energy Services, L.P., South Point Energy Center, LLC, Delta Energy Center, LLC, Geysers Power Company, LLC, Otay Mesa Energy Center, LLC, Calpine Power America—CA, LLC, Pastoria Energy Center, LLC, Metcalf Energy Center, LLC, Los Medanos Energy Center LLC, Los Esteros Critical Energy Facility LLC, Goose Haven Energy Center, LLC, Gilroy Energy Center, LLC, Creed Energy Center, LLC, Calpine Gilroy Cogen, L.P., Power Contract Financing, L.L.C., Calpine Construction Finance Co., L.P.
Description: Fourth Supplement to updated Market Power Analysis of Calpine Energy Services, L.P., et al.
Filed Date: 07/22/2011.
Accession Number: 20110722–5179.
Comment Date: 5 p.m. Eastern Time on Friday, August 12, 2011.

Docket Numbers: ER10–2074–001; ER10–2097–003.
Applicants: Kansas City Power & Light Company, KCP&L Greater Missouri Operations Company.
Description: Supplemental Information of Kansas City Power & Light Company, et al.
Filed Date: 07/15/2011.
Accession Number: 20110715–5153.
Comment Date: 5 p.m. Eastern Time on Friday, August 05, 2011.

Docket Numbers: ER10–2758–001.
Applicants: EnergyConnect, Inc.
Description: EnergyConnect, Inc. Notice of Non-Material Change in Status.
Filed Date: 07/22/2011.
Accession Number: 20110722–5148.
Comment Date: 5 p.m. Eastern Time on Friday, August 12, 2011.

Docket Numbers: ER11–3912–001.
Applicants: Arizona Public Service Company.
Description: Arizona Public Service Company submits tariff filing per 35.17(b): Amendment to APS Service Agreement No. 311 to be effective 8/29/2011.
Filed Date: 07/22/2011.
Accession Number: 20110722–5029.
Comment Date: 5 p.m. Eastern Time on Friday, August 12, 2011.

Docket Numbers: ER11–3963–001.
Applicants: Bruce Power Inc.
Description: Bruce Power Inc. submits tariff filing per 35: Bruce Power Inc. Substitute First Revised Tariff submitted on 7/22/2011.
Filed Date: 07/22/2011.
Accession Number: 20110722–5055.
Comment Date: 5 p.m. Eastern Time on Friday, August 12, 2011.

Docket Numbers: ER11–4102–000.
Applicants: Public Service Company of New Mexico.
Description: Public Service Company of New Mexico submits tariff filing per 35: OATT Changes for Intra-Hour Scheduling to be effective 9/21/2011.
Filed Date: 07/22/2011.
Accession Number: 20110722–5136.
Comment Date: 5 p.m. Eastern Time on Friday, August 12, 2011.

Docket Numbers: ER11–4103–000.
Applicants: Arizona Public Service Company.
Description: Arizona Public Service Company submits tariff filing per 35.13(a)(2)(iii: FERC Electric Rate Schedule No. 253, Construction Agreement between WAPA and APS to be effective 9/9/2011.
Filed Date: 07/22/2011.
Accession Number: 20110722–5151.
Comment Date: 5 p.m. Eastern Time on Friday, August 12, 2011.

Docket Numbers: ER11–4104–000.
Applicants: Southern California Edison Company.
Description: Southern California Edison Company submits tariff filing per 35.13(a)(2)(iii: Letter Agreement for Three 230kV Lines Eldorado Substation with NV Energy to be effective 7/14/2011.
Filed Date: 07/22/2011.
Accession Number: 20110722–5154.
Comment Date: 5 p.m. Eastern Time on Friday, August 12, 2011.

Docket Numbers: ER11–4105–000.
Applicants: Southwest Power Pool, Inc.
Description: Southwest Power Pool, Inc. submits tariff filing per 35: Order No. 745 Compliance Filing to be effective N/A.
Filed Date: 07/22/2011.
Accession Number: 20110722–5159.
Comment Date: 5 p.m. Eastern Time on Friday, August 12, 2011.

Docket Numbers: ER11–4106–000.
Applicants: PJM Interconnection, L.L.C.
Description: PJM Interconnection, L.L.C. submits tariff filing per 35: Compliance Filing per Order 745 to be effective 12/31/9998.
Filed Date: 07/22/2011.
Accession Number: 20110722–5160.
Comment Date: 5 p.m. Eastern Time on Friday, August 12, 2011.

Any person desiring to intervene or to protest in any of the above proceedings must file in accordance with Rules 211 and 214 of the Commission's Rules of Practice and Procedure (18 CFR 385.211 and 385.214) on or before 5 p.m. Eastern time on the specified comment date. It is not necessary to separately intervene again in a subdocket related to a compliance filing if you have previously intervened in the same docket. Protests will be considered by the Commission in determining the appropriate action to be taken, but will not serve to make protestants parties to the proceeding. Anyone filing a motion to intervene or protest must serve a copy of that document on the Applicant. In reference to filings initiating a new proceeding, interventions or protests submitted on or before the comment deadline need not be served on persons other than the Applicant.

As it relates to any qualifying facility filings, the notices of self-certification [or self-recertification] listed above, do not institute a proceeding regarding qualifying facility status. A notice of self-certification [or self-recertification] simply provides notification that the entity making the filing has determined the facility named in the notice meets the applicable criteria to be a qualifying facility. Intervention and/or protest do not lie in dockets that are qualifying facility self-certifications or self-recertifications. Any person seeking to challenge such qualifying facility status may do so by filing a motion pursuant to 18 CFR 292.207(d)(iii). Intervention and protests may be filed in response to notices of qualifying facility dockets other than self-certifications and self-recertifications.

The Commission encourages electronic submission of protests and interventions in lieu of paper, using the

FERC Online links at *http://www.ferc.gov.* To facilitate electronic service, persons with Internet access who will eFile a document and/or be listed as a contact for an intervenor must create and validate an eRegistration account using the eRegistration link. Select the eFiling link to log on and submit the intervention or protests.

Persons unable to file electronically should submit an original and 14 copies of the intervention or protest to the Federal Energy Regulatory Commission, 888 First St., NE., Washington, DC 20426.

The filings in the above proceedings are accessible in the Commission's eLibrary system by clicking on the appropriate link in the above list. They are also available for review in the Commission's Public Reference Room in Washington, DC. There is an eSubscription link on the Web site that enables subscribers to receive e-mail notification when a document is added to a subscribed docket(s). For assistance with any FERC Online service, please e-mail *FERCOnlineSupport@ferc.gov.* or call (866) 208–3676 (toll free). For TTY, call (202) 502–8659.

Dated: July 25, 2011.

Nathaniel J. Davis, Sr.,

Deputy Secretary.

[FR Doc. 2011–19347 Filed 7–29–11; 8:45 am]

BILLING CODE 6717–01–P

DEPARTMENT OF ENERGY

Federal Energy Regulatory Commission

Combined Notice of Filings

July 15, 2011.

Take notice that the Commission has received the following Natural Gas Pipeline Rate and Refund Report filings:

Docket Numbers: RP11–2266–000.
Applicants: Dominion Transmission, Inc.
Description: Dominion Transmission, Inc. submits tariff filing per 154.204: DTI—July 12, 2011 Negotiated Rate Agreement to be effective 7/13/2011.
Filed Date: 07/12/2011.
Accession Number: 20110712–5128.
Comment Date: 5 p.m. Eastern Time on Monday, July 25, 2011.

Docket Numbers: RP11–2267–000.
Applicants: Questar Pipeline Company.
Description: Questar Pipeline Company submits tariff filing per 154.204: ISS Cashout Provision Addition to be effective 8/15/2011.
Filed Date: 07/13/2011.
Accession Number: 20110713–5001.
Comment Date: 5 p.m. Eastern Time on Monday, July 25, 2011.

Docket Numbers: RP11–2268–000.
Applicants: Kinder Morgan Interstate Gas Transmission LLC.
Description: Kinder Morgan Interstate Gas Transmission LLC submits tariff filing per 154.204: Negotiated Rate 2011–07–13 Mieco A&R to be effective 7/14/2011.
Filed Date: 07/13/2011.
Accession Number: 20110713–5076.
Comment Date: 5 p.m. Eastern Time on Monday, July 25, 2011.

Docket Numbers: RP11–2269–000.
Applicants: Big Sandy Pipeline, LLC.
Description: Big Sandy Pipeline, LLC submits tariff filing per 154.202: Big Sandy LINK Implementation to be effective 9/1/2011.
Filed Date: 07/14/2011.
Accession Number: 20110714–5033.
Comment Date: 5 p.m. Eastern Time on Tuesday, July 26, 2011.

Docket Numbers: RP11–2270–000.
Applicants: Big Sandy Pipeline, LLC.
Description: Big Sandy Pipeline, LLC submits tariff filing per 154.602: Cancellation of Original Volume No. 1 to be effective 9/1/2011.
Filed Date: 07/14/2011.
Accession Number: 20110714–5053.
Comment Date: 5 p.m. Eastern Time on Tuesday, July 26, 2011.

Docket Numbers: RP11–2271–000.
Applicants: Algonquin Gas Transmission, LLC.
Description: Algonquin Gas Transmission, LLC submits tariff filing per 154.204: AGT Modifications for Big Sandy LINK Implementation to be effective 9/1/2011.
Filed Date: 07/14/2011.
Accession Number: 20110714–5064.
Comment Date: 5 p.m. Eastern Time on Tuesday, July 26, 2011.

Docket Numbers: RP11–2272–000.
Applicants: Bobcat Gas Storage.
Description: Bobcat Gas Storage submits tariff filing per 154.204: Bobcat Modifications for Big Sandy LINK Implementation to be effective 9/1/2011.
Filed Date: 07/14/2011.
Accession Number: 20110714–5074.
Comment Date: 5 p.m. Eastern Time on Tuesday, July 26, 2011.

Docket Numbers: RP11–2273–000.
Applicants: Egan Hub Storage, LLC.
Description: Egan Hub Storage, LLC submits tariff filing per 154.204: Egan Modifications for Big Sandy LINK Implementation to be effective 9/1/2011.
Filed Date: 07/14/2011.
Accession Number: 20110714–5076.
Comment Date: 5 p.m. Eastern Time on Tuesday, July 26, 2011.

Docket Numbers: RP11–2274–000.
Applicants: East Tennessee Natural Gas, LLC.
Description: East Tennessee Natural Gas, LLC submits tariff filing per 154.204: ETNG Modifications for Big Sandy LINK Implementation to be effective 9/1/2011.
Filed Date: 07/14/2011.
Accession Number: 20110714–5077.
Comment Date: 5 p.m. Eastern Time on Tuesday, July 26, 2011.

Docket Numbers: RP11–2275–000.
Applicants: Ozark Gas Transmission, LLC.
Description: Ozark Gas Transmission, LLC submits tariff filing per 154.204: OGT Modifications for Big Sandy LINK Implementation to be effective 9/1/2011.
Filed Date: 07/14/2011.
Accession Number: 20110714–5078.
Comment Date: 5 p.m. Eastern Time on Tuesday, July 26, 2011.

Docket Numbers: RP11–2276–000.
Applicants: Saltville Gas Storage Company LLC.
Description: Saltville Gas Storage Company LLC submits tariff filing per 154.204: Saltville Modifications for Big Sandy LINK Implementation to be effective 9/1/2011.
Filed Date: 07/14/2011.
Accession Number: 20110714–5083.
Comment Date: 5 p.m. Eastern Time on Tuesday, July 26, 2011.

Docket Numbers: RP11–2277–000.
Applicants: Texas Eastern Transmission, LP.
Description: Texas Eastern Transmission, LP submits tariff filing per 154.204: TETLP Modifications for Big Sandy LINK Implementation to be effective 9/1/2011.
Filed Date: 07/14/2011.
Accession Number: 20110714–5084.
Comment Date: 5 p.m. Eastern Time on Tuesday, July 26, 2011.

Any person desiring to intervene or to protest in any of the above proceedings must file in accordance with Rules 211 and 214 of the Commission's Rules of Practice and Procedure (18 CFR 385.211 and 385.214) on or before 5 p.m. Eastern time on the specified comment date. It is not necessary to separately intervene again in a subdocket related to a compliance filing if you have previously intervened in the same docket. Protests will be considered by the Commission in determining the appropriate action to be taken, but will not serve to make protestants parties to the proceeding. Anyone filing a motion to intervene or protest must serve a copy of that document on the Applicant. In reference to filings initiating a new proceeding, interventions or protests submitted on or before the comment deadline need

not be served on persons other than the Applicant.

The Commission encourages electronic submission of protests and interventions in lieu of paper, using the FERC Online links at *http://www.ferc.gov.* To facilitate electronic service, persons with Internet access who will eFile a document and/or be listed as a contact for an intervenor must create and validate an eRegistration account using the eRegistration link. Select the eFiling link to log on and submit the intervention or protests.

Persons unable to file electronically should submit an original and 14 copies of the intervention or protest to the Federal Energy Regulatory Commission, 888 First St., NE., Washington, DC 20426.

The filings in the above proceedings are accessible in the Commission's eLibrary system by clicking on the appropriate link in the above list. They are also available for review in the Commission's Public Reference Room in Washington, DC. There is an eSubscription link on the Web site that enables subscribers to receive e-mail notification when a document is added to a subscribed docket(s). For assistance with any FERC Online service, please e-mail *FERCOnlineSupport@ferc.gov* or call (866) 208–3676 (toll free). For TTY, call (202) 502–8659.

Dated: July 15, 2011.

Nathaniel J. Davis, Sr.,

Deputy Secretary.

[FR Doc. 2011–19350 Filed 7–29–11; 8:45 am]

BILLING CODE 6717–01–P

DEPARTMENT OF ENERGY

Federal Energy Regulatory Commission

Combined Notice of Filings #2

Take notice that the Commission received the following exempt wholesale generator filings:

Docket Numbers: EG11–109–000.
Applicants: Double ''C'' Limited.
Description: Notice of Self-Certification of Exempt Wholesale Generator for Double ''C'' Limited.
Filed Date: 07/25/2011.
Accession Number: 20110725–5065.
Comment Date: 5 p.m. Eastern Time on Monday, August 15, 2011.

Docket Numbers: EG11–110–000.
Applicants: High Sierra Limited.
Description: Notice of Self-Certification of Exempt Wholesale Generator for High Sierra Limited.
Filed Date: 07/25/2011.
Accession Number: 20110725–5067.
Comment Date: 5 p.m. Eastern Time on Monday, August 15, 2011.

Docket Numbers: EG11–111–000.
Applicants: Kern Front Limited.
Description: Notice of Self-Certifi*cation of Exempt Wholesale Generator for Kern Front Limited.*
Filed Date: 07/25/2011.
Accession Number: 20110725–5068.
Comment Date: 5 p.m. Eastern Time on Monday, August 15, 2011.

Docket Numbers: EG11–112–000.
Applicants: Cogentrix of Alamosa, LLC.
Description: Cogentrix of Alamosa, LLC, Notice of Self-certification of Exempt Wholesale Generator.
Filed Date: 07/25/2011.
Accession Number: 20110725–5070.
Comment Date: 5 p.m. Eastern Time on Monday, August 15, 2011.

Docket Numbers: EG11–113–000.
Applicants: Hudson Ranch Power I LLC.
Description: Self-Certification Notice of Exempt Wholesale Generator of Hudson Ranch Power I LLC.
Filed Date: 07/25/2011.
Accession Number: 20110725–5116.
Comment Date: 5 p.m. Eastern Time on Monday, August 15, 2011.

Take notice that the Commission received the following electric rate filings:

Docket Numbers: ER11–3551–002.
Applicants: Glacial Energy of New York.
Description: Glacial Energy of New York submits tariff filing per 35.17(b): Deficiency NY to be effective 7/25/2011.
Filed Date: 07/25/2011.
Accession Number: 20110725–5104.
Comment Date: 5 p.m. Eastern Time on Monday, August 08, 2011.

Docket Numbers: ER11–3554–002.
Applicants: Glacial Energy of California, Inc.
Description: Glacial Energy of California, Inc. submits tariff filing per 35.17(b): Deficiency Filing-CA to be effective 7/25/2011.
Filed Date: 07/25/2011.
Accession Number: 20110725–5109.
Comment Date: 5 p.m. Eastern Time on Monday, August 08, 2011.

Docket Numbers: ER11–4065–001.
Applicants: PJM Interconnection, L.L.C.
Description: PJM Interconnection, L.L.C. submits tariff filing per 35.17(b): Errata to PJM No. V4–054; Service Agreement No. 2967—Docket No. ER11–4065–000 to be effective 6/17/2011.
Filed Date: 07/25/2011.
Accession Number: 20110725–5049.
Comment Date: 5 p.m. Eastern Time on Monday, August 15, 2011.

Docket Numbers: ER11–4107–000.
Applicants: PJM Interconnection, L.L.C.
Description: PJM Interconnection, L.L.C. submits tariff filing per 35.13(a)(2)(iii: Queue No. W4–058; Original Service Agreement No. 2973 to be effective 6/24/2011.
Filed Date: 07/25/2011.
Accession Number: 20110725–5048.
Comment Date: 5 p.m. Eastern Time on Monday, August 15, 2011.

Docket Numbers: ER11–4108–000.
Applicants: Southern California Edison Company.
Description: Southern California Edison Company submits tariff filing per 35.13(a)(2)(iii: LGIA Alta Visa SunTower Generating Station Project NRG Solar to be effective 7/26/2011.
Filed Date: 07/25/2011.
Accession Number: 20110725–5069.
Comment Date: 5 p.m. Eastern Time on Monday, August 15, 2011.

Docket Numbers: ER11–4109–000.
Applicants: Florida Power Corporation.
Description: Florida Power Corporation submits tariff filing per 35.13(a)(2)(iii: Revised Service Agreement No. 143 under Florida Power Corp. OATT to be effective 5/*18/2011*.
Filed Date: 07/25/2011.
Accession Number: 20110725–5071.
Comment Date: 5 p.m. Eastern Time on Monday, August 15, 2011.

Docket Numbers: ER11–4110–000.
Applicants: Northern States Power Company, a Minnesota corporation, Northern States Power Company, a Wisconsin corporation, Midwest Independent Transmission System Operator, Inc.
Description: Northern States Power Company, a Minnesota corporation submits tariff filing per 35.13(a)(2)(iii: 07–25–11_NSP Attachment GG to be effective 8/1/2011.
Filed Date: 07/25/2011.
Accession Number: 20110725–5079.
Comment Date: 5 p.m. Eastern Time on Monday, August 15, 2011.

Any person desiring to intervene or to protest in any of the above proceedings must file in accordance with Rules 211 and 214 of the Commission's Rules of Practice and Procedure (18 CFR 385.211 and 385.214) on or before 5 p.m. Eastern time on the specified comment date. It is not necessary to separately intervene again in a subdocket related to a compliance filing if you have previously intervened in the same docket. Protests will be considered by the Commission in determining the appropriate action to be taken, but will not serve to make protestants parties to the proceeding. Anyone filing a motion to intervene or

protest must serve a copy of that document on the Applicant. In reference to filings initiating a new proceeding, interventions or protests submitted on or before the comment deadline need not be served on persons other than the Applicant.

As it relates to any qualifying facility filings, the notices of self-certification [or self-recertification] listed above, do not institute a proceeding regarding qualifying facility status. A notice of self-certification [or self-recertification] simply provides notification that the entity making the filing has determined the facility named in the notice meets the applicable criteria to be a qualifying facility. Intervention and/or protest do not lie in dockets that are qualifying facility self-certifications or self-recertifications. Any person seeking to challenge such qualifying facility status may do so by filing a motion pursuant to 18 CFR 292.207(d)(iii). Intervention and protests may be filed in response to notices of qualifying facility dockets other than self-certifications and self-recertifications.

The Commission encourages electronic submission of protests and interventions in lieu of paper, using the FERC Online links at *http://www.ferc.gov.* To facilitate electronic service, persons with Internet access who will eFile a document and/or be listed as a contact for an intervenor must create and validate an eRegistration account using the eRegistration link. Select the eFiling link to log on and submit the intervention or protests.

Persons unable to file electronically should submit an original and 14 copies of the intervention or protest to the Federal Energy Regulatory Commission, 888 First St., NE., Washington, DC 20426.

The filings in the above proceedings are accessible in the Commission's eLibrary system by clicking on the appropriate link in the above list. They are also available for review in the Commission's Public Reference Room in Washington, DC. There is an eSubscription link on the Web site that enables subscribers to receive e-mail notification when a document is added to a subscribed docket(s). For assistance with any FERC Online service, please email *FERCOnlineSupport@ferc.gov.* or call (866) 208–3676 (toll free). For TTY, call (202) 502–8659.

Dated: July 25, 2011.

Nathaniel J. Davis, Sr.,

Deputy Secretary.

[FR Doc. 2011–19352 Filed 7–29–11; 8:45 am]

BILLING CODE 6717–01–P

DEPARTMENT OF ENERGY

Federal Energy Regulatory Commission

Combined Notice of Filings #1

Take notice that the Commission received the following electric corporate filings:

Docket Numbers: EC11–95–000.
Applicants: El Dorado Energy, LLC, Copper Mountain Solar 1, LLC.
Description: El Dorado Energy, LLC and Copper Mountain Solar 1, LLC Application pursuant to Section 203 of the FPA for Authorization of Intracorporate Transfer of Jurisdictional Assets.
Filed Date: 07/14/2011.
Accession Number: 20110714–5110.
Comment Date: 5 p.m. Eastern Time on Thursday, August 4, 2011.

Take notice that the Commission received the following electric rate filings:

Docket Numbers: ER11–4044–001.
Applicants: Gratiot County Wind LLC.
Description: Gratiot County Wind LLC submits tariff filing per 35.17(b): Supplement to Market-Based Rate Application to be effective 9/12/2011.
Filed Date: 07/14/2011.
Accession Number: 20110714–5023.
Comment Date: 5 p.m. Eastern Time on Thursday, August 4, 2011.

Docket Numbers: ER11–4046–001.
Applicants: Gratiot County Wind II LLC.
Description: Gratiot County Wind II LLC submits tariff filing per 35.17(b): Supplement to Market-Based Rate Application to be effective 9/12/2011.
Filed Date: 07/14/2011.
Accession Number: 20110714–5024.
Comment Date: 5 p.m. Eastern Time on Thursday, August 4, 2011.

Docket Numbers: ER11–4052–000.
Applicants: Alpha Gas and Electric LLC.
Description: Alpha Gas and Electric LLC submits tariff filing per: Marked Tariff Attachment to be effective N/A.
Filed Date: 07/14/2011.
Accession Number: 20110714–5093.
Comment Date: 5 p.m. Eastern Time on Thursday, August 4, 2011.

Docket Numbers: ER11–4053–000.
Applicants: Southwest Power Pool, Inc.
Description: Southwest Power Pool, Inc. submits tariff filing per 35.13(a)(2)(iii): Submission of Revisions to SPS Pricing Zone Rate to be effective 5/15/2011.
Filed Date: 07/14/2011.
Accession Number: 20110714–5085.
Comment Date: 5 p.m. Eastern Time on Thursday, August 4, 2011.

Docket Numbers: ER11–4054–000.
Applicants: FirstEnergy Solutions Corp.
Description: FirstEnergy Solutions Corp. submits tariff filing per 35: Revised Market-Based Rate Power Sales Tariff to be effective 6/29/2011.
Filed Date: 07/14/2011.
Accession Number: 20110714–5087.
Comment Date: 5 p.m. Eastern Time on Thursday, August 4, 2011.

Docket Numbers: ER11–4055–000.
Applicants: Copper Mountain Solar 1, LLC.
Description: Copper Mountain Solar 1, LLC submits tariff filing per 35.12: Copper Mountain Solar 1 LLC FERC Electric Tariff No. 1 Market-Based Rates Tariff to be effective 7/14/2011.
Filed Date: 07/14/2011.
Accession Number: 20110714–5095.
Comment Date: 5 p.m. Eastern Time on Thursday, August 4, 2011.

Any person desiring to intervene or to protest in any of the above proceedings must file in accordance with Rules 211 and 214 of the Commission's Rules of Practice and Procedure (18 CFR 385.211 and 385.214) on or before 5 p.m. Eastern time on the specified comment date. It is not necessary to separately intervene again in a subdocket related to a compliance filing if you have previously intervened in the same docket. Protests will be considered by the Commission in determining the appropriate action to be taken, but will not serve to make protestants parties to the proceeding. Anyone filing a motion to intervene or protest must serve a copy of that document on the Applicant. In reference to filings initiating a new proceeding, interventions or protests submitted on or before the comment deadline need not be served on persons other than the Applicant.

As it relates to any qualifying facility filings, the notices of self-certification [or self-recertification] listed above, do not institute a proceeding regarding qualifying facility status. A notice of self-certification [or self-recertification] simply provides notification that the entity making the filing has determined the facility named in the notice meets the applicable criteria to be a qualifying facility. Intervention and/or protest do not lie in dockets that are qualifying facility self-certifications or self-recertifications. Any person seeking to challenge such qualifying facility status may do so by filing a motion pursuant to 18 CFR 292.207(d)(iii). Intervention and protests may be filed in response to notices of qualifying facility dockets other than self-certifications and self-recertifications.

The Commission encourages electronic submission of protests and

interventions in lieu of paper, using the FERC Online links at *http://www.ferc.gov.* To facilitate electronic service, persons with Internet access who will eFile a document and/or be listed as a contact for an intervenor must create and validate an eRegistration account using the eRegistration link. Select the eFiling link to log on and submit the intervention or protests.

Persons unable to file electronically should submit an original and 14 copies of the intervention or protest to the Federal Energy Regulatory Commission, 888 First St., NE., Washington, DC 20426.

The filings in the above proceedings are accessible in the Commission's eLibrary system by clicking on the appropriate link in the above list. They are also available for review in the Commission's Public Reference Room in Washington, DC. There is an eSubscription link on the Web site that enables subscribers to receive e-mail notification when a document is added to a subscribed docket(s). For assistance with any FERC Online service, please e-mail *FERCOnlineSupport@ferc.gov* or call (866) 208–3676 (toll free). For TTY, call (202) 502–8659.

Dated: July 15, 2011.

Nathaniel J. Davis, Sr.,

Deputy Secretary.

[FR Doc. 2011–19351 Filed 7–29–11; 8:45 am]

BILLING CODE 6717–01–P

DEPARTMENT OF ENERGY

Federal Energy Regulatory Commission

Combined Notice of Filings No. 1

Take notice that the Commission has received the following Natural Gas Pipeline Rate and Refund Report filings:

Docket Numbers: RP11–2278–000.
Applicants: Southern LNG Company, LLC.
Description: Southern LNG Company, LLC submits tariff filing per 154.204: BG Negotiated Rate to be effective 8/1/2011.
Filed Date: 07/15/2011.
Accession Number: 20110715–5055.
Comment Date: 5 p.m. Eastern Time on Wednesday, July 27, 2011.

Docket Numbers: RP11–2279–000.
Applicants: Gulf South Pipeline Company, LP.
Description: Gulf South Pipeline Company, LP submits tariff filing per 154.204: Devon K34694–33 Amendment to Negotiated Rate Agreement Filing to be effective 7/15/2011.
Filed Date: 07/18/2011.
Accession Number: 20110718–5042.
Comment Date: 5 p.m. Eastern Time on Monday, August 01, 2011.

Docket Numbers: RP11–2280–000.
Applicants: Texas Gas Transmission, LLC.
Description: Texas Gas Transmission, LLC submits tariff filing per 154.204: Filing to incorporate approved changes to be effective 7/13/2011.
Filed Date: 07/18/2011.
Accession Number: 20110718–5063.
Comment Date: 5 p.m. Eastern Time on Monday, August 01, 2011.

Docket Numbers: RP11–2281–000.
Applicants: Iroquois Gas Transmission System, L.P.
Description: Iroquois Gas Transmission System, L.P. submits tariff filing per 154.204: 07/18/11 Negotiated Rates—JP Morgan Ventures Energy Corporation to be effective 7/19/2011.
Filed Date: 07/18/2011.
Accession Number: 20110718–5101.
Comment Date: 5 p.m. Eastern Time on Monday, August 01, 2011.

Any person desiring to intervene or to protest in any of the above proceedings must file in accordance with Rules 211 and 214 of the Commission's Rules of Practice and Procedure (18 CFR 385.211 and 385.214) on or before 5 p.m. Eastern time on the specified comment date. It is not necessary to separately intervene again in a subdocket related to a compliance filing if you have previously intervened in the same docket. Protests will be considered by the Commission in determining the appropriate action to be taken, but will not serve to make protestants parties to the proceeding. Anyone filing a motion to intervene or protest must serve a copy of that document on the Applicant. In reference to filings initiating a new proceeding, interventions or protests submitted on or before the comment deadline need not be served on persons other than the Applicant.

The Commission encourages electronic submission of protests and interventions in lieu of paper, using the FERC Online links at *http://www.ferc.gov.* To facilitate electronic service, persons with Internet access who will eFile a document and/or be listed as a contact for an intervenor must create and validate an eRegistration account using the eRegistration link. Select the eFiling link to log on and submit the intervention or protests.

Persons unable to file electronically should submit an original and 14 copies of the intervention or protest to the Federal Energy Regulatory Commission, 888 First St., NE., Washington, DC 20426.

The filings in the above proceedings are accessible in the Commission's eLibrary system by clicking on the appropriate link in the above list. They are also available for review in the Commission's Public Reference Room in Washington, DC. There is an eSubscription link on the Web site that enables subscribers to receive e-mail notification when a document is added to a subscribed docket(s). For assistance with any FERC Online service, please e-mail *FERCOnlineSupport@ferc.gov.* or call (866) 208–3676 (toll free). For TTY, call (202) 502–8659.

Dated: July 19, 2011.

Nathaniel J. Davis, Sr.,

Deputy Secretary.

[FR Doc. 2011–19349 Filed 7–29–11; 8:45 am]

BILLING CODE 6717–01–P

DEPARTMENT OF ENERGY

Federal Energy Regulatory Commission

Combined Notice of Filings No. 2

Take notice that the Commission has received the following Natural Gas Pipeline Rate and Refund Report filings:

Docket Numbers: RP11–1566–005.
Applicants: Tennessee Gas Pipeline Company.
Description: Tennessee Gas Pipeline Company submits tariff filing per 154.203: Tariff Cleanup FT–BH Min Commodity to be effective 6/1/2011.
Filed Date: 07/13/2011.
Accession Number: 20110713–5157.
Comment Date: 5 p.m. Eastern Time on Monday, July 25, 2011.

Docket Numbers: RP11–59–002.
Applicants: Northwest Pipeline GP.
Description: Northwest Pipeline GP submits tariff filing per 154.203: NWP RP11–59–002 Compliance Filing to be effective 11/13/2010.
Filed Date: 07/15/2011.
Accession Number: 20110715–5079.
Comment Date: 5 p.m. Eastern Time on Wednesday, July 27, 2011.

Docket Numbers: RP11–1566–004.
Applicants: Tennessee Gas Pipeline Company.
Description: Tennessee Gas Pipeline Company submits tariff filing per: Correct June 1 to July 1 to be effective N/A.
Filed Date: 07/18/2011.
Accession Number: 20110718–5000.
Comment Date: 5 p.m. Eastern Time on Monday, August 01, 2011.

Docket Numbers: RP11–2258–001.
Applicants: PetroLogistics Natural Gas Storage, LLC.
Description: PetroLogistics Natural Gas Storage, LLC submits tariff filing per 154.205(b): Amendment Filing to be effective 8/5/2011.

Filed Date: 07/18/2011.
Accession Number: 20110718–5168.
Comment Date: 5 p.m. Eastern Time on Monday, August 01, 2011.

Docket Numbers: RP11–2278–001.
Applicants: Southern LNG Company, LLC.
Description: Southern LNG Company, LLC submits tariff filing per 154.205(b): BG Negotiated Rate—Errata to be effective 8/1/2011.
Filed Date: 07/18/2011.
Accession Number: 20110718–5180.
Comment Date: 5 p.m. Eastern Time on Monday, August 01, 2011.

Docket Numbers: RP11–2231–001.
Applicants: Gulf Crossing Pipeline Company LLC.
Description: Gulf Crossing Pipeline Company LLC submits tariff filing per 154.205(b): Amendment Filing in RP11–2231 to be effective 7/1/2011.
Filed Date: 07/19/2011.
Accession Number: 20110719–5046.
Comment Date: 5 p.m. Eastern Time on Monday, August 01, 2011.

Any person desiring to protest this filing must file in accordance with Rule 211 of the Commission's Rules of Practice and Procedure (18 CFR 385.211). Protests to this filing will be considered by the Commission in determining the appropriate action to be taken, but will not serve to make protestants parties to the proceeding. Such protests must be filed on or before 5 p.m. Eastern time on the specified comment date. Anyone filing a protest must serve a copy of that document on all the parties to the proceeding.

The Commission encourages electronic submission of protests in lieu of paper using the ''eFiling'' link at *http://www.ferc.gov.* Persons unable to file electronically should submit an original and 14 copies of the protest to the Federal Energy Regulatory Commission, 888 First Street, NE., Washington, DC 20426.

This filing is accessible on-line at *http://www.ferc.gov,* using the ''eLibrary'' link and is available for review in the Commission's Public Reference Room in Washington, DC. There is an ''eSubscription'' link on the Web site that enables subscribers to receive e-mail notification when a document is added to a subscribed docket(s). For assistance with any FERC Online service, please e-mail *FERCOnlineSupport@ferc.gov,* or call (866) 208–3676 (toll free). For TTY, call (202) 502–8659.

Dated: July 19, 2011.

Nathaniel J. Davis, Sr.,

Deputy Secretary.

[FR Doc. 2011–19348 Filed 7–29–11; 8:45 am]

BILLING CODE 6717–01–P

ENVIRONMENTAL PROTECTION AGENCY

[FRL–9445–4; Permit No. AKG–33–000]

Proposed Reissuance of a General NPDES Permit for Facilities Related to Oil and Gas Extraction

AGENCY: Environmental Protection Agency.

ACTION: Proposed reissuance of a general permit.

SUMMARY: On January 2, 2009, the general permit (GP) regulating activities related to the extraction of oil and gas on the North Slope of the Brooks Range in the state of Alaska expired. This proposed reissuance of a general permit, AKG–33–0000, is intended to regulate activities related to the extraction of oil and gas on the North Slope of the Brooks Range in the state of Alaska plus the proposed area expansion described in the Fact Sheet including activities along the Trans Alaskan Pipeline corridor previously covered by Alyeska Pipeline Services, Inc.'s NPDES permit, AK–005056–3. The draft general permit would cover the same discharges as the previous general permit except for domestic wastewater discharges. The covered discharges include gravel pit dewatering, construction dewatering, hydrostatic test water, mobile spill response, and storm water from industrial activities. The proposed reissuance also includes a new outfall designation for the discharge of secondary containment water. When issued, the proposed permit will establish effluent limitations, standards, prohibitions and other conditions on discharges from covered facilities. These conditions are based on existing national effluent guidelines, the state of Alaska's Water Quality Standards and material contained in the administrative record. A description of the basis for the conditions and requirements of the draft general permit is given in the Fact Sheet. This is also notice of the Clean Water Act § 401 draft Certification provided by the state of Alaska and the termination of administrative extensions as described in the Fact Sheet.

The reissuance of this general permit was previously public noticed on July 2, 2009. EPA has changed some permit conditions in this proposal based on the comments received in 2009.

DATES: Interested persons may submit comments on the proposed reissuance of the general permit to EPA, Region 10 at the address below. Comments must be postmarked by September 15, 2011. EPA received many comments on the previous proposal and attempted to address some of these in the re-proposal so please submit new comments on this action.

ADDRESSES: Comments on the proposed general permit reissuance should be sent to the attention of the Director, Office of Water & Watersheds, EPA—Region 10, 1200 Sixth Avenue, Suite 900 OWW–130, Seattle, WA 98101. Comments may also be submitted electronically to *godsey.cindi@epa.gov.*

FOR FURTHER INFORMATION CONTACT: Copies of the proposed general permit and Fact Sheet are available upon request. Requests may be made to Audrey Washington at (206) 553–0523 or to Cindi Godsey at (907) 271–6561. Requests may also be electronically mailed to: *washington.audrey@epa.gov* or *godsey.cindi@epa.gov.*

These documents may also be found on the EPA Region 10 Web site at *http://yosemite.epa.gov/r10/WATER.NSF/NPDES+Permits/DraftPermitsAK.*

SUPPLEMENTARY INFORMATION:

Executive Order 12866: The Office of Management and Budget has exempted this action from the review requirements of Executive Order 12866 pursuant to Section 6 of that order.

Regulatory Flexibility Act: Under the Regulatory Flexibility Act (RFA), 5 U.S.C. 601 *et seq.,* a Federal agency must prepare an initial regulatory flexibility analysis ''for any proposed rule'' for which the agency ''is required by section 553 of the Administrative Procedure Act (APA), or any other law, to publish general notice of proposed rulemaking.'' The RFA exempts from this requirement any rule that the issuing agency certifies ''will not, if promulgated, have a significant economic impact on a substantial number of small entities.'' EPA has concluded that NPDES general permits are permits, not rulemakings, under the APA and thus not subject to APA rulemaking requirements or the RFA. Notwithstanding that general permits are not subject to the RFA, EPA has determined that this GP, as issued, will not have a significant economic impact on a substantial number of small entities.

Dated: July 21, 2011.

Christine Psyk,

Associate Director, Office of Water & Watersheds, Region 10, U.S. Environmental Protection Agency.

[FR Doc. 2011–19127 Filed 7–29–11; 8:45 am]

BILLING CODE 6560–50–P

ENVIRONMENTAL PROTECTION AGENCY

[FRL–9446–8]

Proposed Settlement Agreement, Clean Air Act Citizen Suit

AGENCY: Environmental Protection Agency (EPA).

ACTION: Notice of Proposed Settlement Agreement; Request for Public Comment.

SUMMARY: In accordance with section 113(g) of the Clean Air Act, as amended (''CAA'' or the ''Act''), 42 U.S.C. 7413(g), notice is hereby given of a proposed settlement agreement to address a lawsuit filed by Concerned Citizens Around Murphy in the United States District Court for the Eastern District of Louisiana: *Concerned Citizens Around Murphy* v. *Jackson,* No. 10-cv–04444 (E.D. La.). Plaintiff filed a deadline suit to compel the Administrator to respond to an administrative petition seeking EPA's objection to a CAA Title V operating permit issued by the Louisiana Department of Environmental Quality to Murphy Oil USA for the Meraux Refinery in St. Bernard Parish, Louisiana. Under the terms of the proposed settlement agreement, EPA has agreed to respond to the petition by September 22, 2011.

DATES: Written comments on the proposed settlement agreement must be received by *August 31, 2011.*

ADDRESSES: Submit your comments, identified by Docket ID number EPA–HQ–OGC–2011–0635, online at *http://www.regulations.gov* (EPA's preferred method); by e-mail to *oei.docket@epa.gov;* by mail to EPA Docket Center, Environmental Protection Agency, Mailcode: 2822T, 1200 Pennsylvania Ave., NW., Washington, DC 20460–0001; or by hand delivery or courier to EPA Docket Center, EPA West, Room 3334, 1301 Constitution Ave., NW., Washington, DC, between 8:30 a.m. and 4:30 p.m. Monday through Friday, excluding legal holidays. Comments on a disk or CD–ROM should be formatted in Word or ASCII file, avoiding the use of special characters and any form of encryption, and may be mailed to the mailing address above.

FOR FURTHER INFORMATION CONTACT: Melina Williams, Air and Radiation Law Office (2344A), Office of General Counsel, U.S. Environmental Protection Agency, 1200 Pennsylvania Ave., NW., Washington, DC 20460; telephone: (202) 564–3406; fax number (202) 564–5603; e-mail address: *williams.melina@epa.gov.*

SUPPLEMENTARY INFORMATION:

I. Additional Information About the Proposed Settlement Agreement

This proposed settlement agreement would resolve a lawsuit alleging that the Administrator failed to perform a nondiscretionary duty to grant or deny, within 60 days of submission, an administrative petition to object to a CAA Title V permit issued by the Louisiana Department of Environmental Quality to Murphy Oil USA for the Meraux Refinery. Under the terms of the proposed settlement agreement, EPA has agreed to sign a response to the petition by September 22, 2011. The proposed settlement agreement further states that EPA shall expeditiously provide written notice of such action to Concerned Citizens Around Murphy through its counsel in this matter, and that Concerned Citizens Around Murphy shall file a motion for voluntary dismissal of the Complaint with prejudice within 15 days of the date when EPA provides such notice. In addition, the proposed settlement agreement sets the attorneys' fees and costs in this matter at $3,000.00.

For a period of thirty (30) days following the date of publication of this notice, the Agency will accept written comments relating to the proposed settlement agreement from persons who were not named as parties or intervenors to the litigation in question. EPA or the Department of Justice may withdraw or withhold consent to the proposed settlement agreement if the comments disclose facts or considerations that indicate that such consent is inappropriate, improper, inadequate, or inconsistent with the requirements of the Act. Unless EPA or the Department of Justice determines that consent to this settlement agreement should be withdrawn, the terms of the agreement will be affirmed.

II. Additional Information About Commenting on the Proposed Settlement Agreement

A. How can I get a copy of the settlement agreement?

The official public docket for this action (identified by Docket ID No. EPA–HQ–OGC–2011–0635) contains a copy of the proposed settlement agreement. The official public docket is available for public viewing at the Office of Environmental Information (OEI) Docket in the EPA Docket Center, EPA West, Room 3334, 1301 Constitution Ave., NW., Washington, DC. The EPA Docket Center Public Reading Room is open from 8:30 a.m. to 4:30 p.m., Monday through Friday, excluding legal holidays. The telephone number for the Public Reading Room is (202) 566–1744, and the telephone number for the OEI Docket is (202) 566–1752.

An electronic version of the public docket is available through *http://www.regulations.gov.* You may use the *http://www.regulations.gov* to submit or view public comments, access the index listing of the contents of the official public docket, and to access those documents in the public docket that are available electronically. Once in the system, key in the appropriate docket identification number then select ''search''.

It is important to note that EPA's policy is that public comments, whether submitted electronically or in paper, will be made available for public viewing online at *http://www.regulations.gov* without change, unless the comment contains copyrighted material, CBI, or other information whose disclosure is restricted by statute. Information claimed as CBI and other information whose disclosure is restricted by statute is not included in the official public docket or in the electronic public docket. EPA's policy is that copyrighted material, including copyrighted material contained in a public comment, will not be placed in EPA's electronic public docket but will be available only in printed, paper form in the official public docket. Although not all docket materials may be available electronically, you may still access any of the publicly available docket materials through the EPA Docket Center.

B. How and to whom do I submit comments?

You may submit comments as provided in the **ADDRESSES** section. Please ensure that your comments are submitted within the specified comment period. Comments received after the close of the comment period will be marked ''late.'' EPA is not required to consider these late comments.

If you submit an electronic comment, EPA recommends that you include your name, mailing address, and an e-mail address or other contact information in the body of your comment and with any disk or CD ROM you submit. This ensures that you can be identified as the submitter of the comment and allows EPA to contact you in case EPA cannot read your comment due to technical difficulties or needs further information on the substance of your comment. Any identifying or contact information

provided in the body of a comment will be included as part of the comment that is placed in the official public docket, and made available in EPA's electronic public docket. If EPA cannot read your comment due to technical difficulties and cannot contact you for clarification, EPA may not be able to consider your comment.

Use of the *http://www.regulations.gov* Web site to submit comments to EPA electronically is EPA's preferred method for receiving comments. The electronic public docket system is an ''anonymous access'' system, which means EPA will not know your identity, e-mail address, or other contact information unless you provide it in the body of your comment. In contrast to EPA's electronic public docket, EPA's electronic mail (e-mail) system is not an ''anonymous access'' system. If you send an e-mail comment directly to the Docket without going through *http://www.regulations.gov,* your e-mail address is automatically captured and included as part of the comment that is placed in the official public docket, and made available in EPA's electronic public docket.

Dated: July 26, 2011.

Richard B. Ossias,

Associate General Counsel.

[FR Doc. 2011–19397 Filed 7–29–11; 8:45 am]

BILLING CODE 6560–50–P

ENVIRONMENTAL PROTECTION AGENCY

[FRL–9446–5]

Public Water System Supervision Program Revision for the State of Louisiana

AGENCY: United States Environmental Protection Agency (EPA).

ACTION: Notice of proposed approval.

SUMMARY: Notice is hereby given that the State of Louisiana is revising its approved Public Water System Supervision Program, by adopting new regulations for the Public Notification Rule, Filter Backwash Recycling Rule, Long Term 1 Enhanced Surface Water Treatment Rule, Radionuclides Rule, and the Revised Drinking Water Standard for Arsenic Rule, promulgated and published in the **Federal Register** at 72 FR 57782 on October 10, 2007. Louisiana has adopted the Public Notification Rule, Filter Backwash Recycling Rule, Long Term 1 Enhanced Surface Water Treatment Rule, Radionuclides Rule, and the Revised Drinking Water Standard for Arsenic Rule, to strengthen the protection of public health. EPA has determined that the proposed program revisions submitted by Louisiana for these revisions are no less stringent than the corresponding federal regulations. Therefore, EPA proposes to approve these program revisions.

DATES: All interested parties may request a public hearing. A request for a public hearing must be submitted by August 31, 2011 to the Regional Administrator at the EPA Region 6 address shown below. Frivolous or insubstantial requests for a hearing may be denied by the Regional Administrator. However, if a substantial request for a public hearing is made by August 31, 2011, a public hearing will be held. If no timely and appropriate request for a hearing is received and the Regional Administrator does not elect to hold a hearing on his own motion, this determination shall become final and effective on August 31, 2011. Any request for a public hearing shall include the following information: The name, address, and telephone number of the individual, organization, or other entity requesting a hearing; a brief statement of the requesting person's interest in the Regional Administrator's determination and a brief statement of the information that the requesting person intends to submit at such hearing; and the signature of the individual making the request or, if the request is made on behalf of an organization or other entity, the signature of a responsible official of the organization or other entity.

ADDRESSES: All documents relating to this determination are available for inspection between the hours of 8 a.m. and 4:30 p.m., Monday through Friday, at the following offices: DHH–OPH–CEHS Engineering Services, 628 N. Fourth Street, P.O. Box 4489, Baton Rouge, LA 70821; and the EPA Region 6, Drinking Water Section (6WQ–SD), 1445 Ross Avenue, Suite 1200, Dallas, Texas 75202.

FOR FURTHER INFORMATION CONTACT: Andy Waite, EPA Region 6, Drinking Water Section at the Dallas address given above or at telephone (214) 665–7332, or *waite.andrew@epa.gov.*

Authority: Section 1413 of the Safe Drinking Water Act, as amended (1996), and 40 CFR part 141 and 142 of the National Primary Drinking Water Regulations.

Dated: July 20, 2011

Al Armendariz,

Regional Administrator, Region 6.

[FR Doc. 2011–19396 Filed 7–29–11; 8:45 am]

BILLING CODE 6560–50–P

FEDERAL COMMUNICATIONS COMMISSION

Notice of Public Information Collection(s) Being Reviewed by the Federal Communications Commission, Comments Requested

July 21, 2011.

SUMMARY: The Federal Communications Commission, as part of its continuing effort to reduce paperwork burden invites the general public and other Federal agencies to take this opportunity to comment on the following information collection(s), as required by the Paperwork Reduction Act (PRA) of 1995, 44 U.S.C. 3501–3520. Comments are requested concerning: (a) Whether the proposed collection of information is necessary for the proper performance of the functions of the Commission, including whether the information shall have practical utility; (b) the accuracy of the Commission's burden estimate; (c) ways to enhance the quality, utility, and clarity of the information collected; (d) ways to minimize the burden of the collection of information on the respondents, including the use of automated collection techniques or other forms of information technology; and (e) ways to further reduce the information collection burden on small business concerns with fewer than 25 employees.

The FCC may not conduct or sponsor a collection of information unless it displays a currently valid control number. No person shall be subject to any penalty for failing to comply with a collection of information subject to the Paperwork Reduction Act (PRA) that does not display a currently valid OMB control number.

DATES: Written Paperwork Reduction Act (PRA) comments should be submitted on or before September 30, 2011. If you anticipate that you will be submitting PRA comments, but find it difficult to do so within the period of time allowed by this notice, you should advise the FCC contact listed below as soon as possible.

ADDRESSES: Direct all PRA comments to Nicholas A. Fraser, Office of Management and Budget, via fax at 202–395–5167 or via the Internet at *Nicholas_A._Fraser@omb.eop.gov* and to the Federal Communications Commission via e-mail to *PRA@fcc.gov.*

FOR FURTHER INFORMATION CONTACT: Leslie F. Smith, Office of Managing Director, (202) 418–0217. For additional information, contact Leslie F. Smith at *Leslie.Smith@fcc.gov* or call 202–418–0217.

SUPPLEMENTARY INFORMATION:

OMB Control Number: 3060–0430.

Title: Section 1.1206, Permit-but-Disclose Proceedings.

Form Number: N/A.

Type of Review: Revision of a currently approved collection.

Respondents: Individuals or households; Business or other for-profit; Not-for-profit institutions; Federal Government; and State, local, or tribal governments.

Number of Respondents and Responses: 11,500 respondents; 11,500 responses.

Estimated Time per Response: 45 minutes (0.75 hours).

Frequency of Response: On occasion reporting requirements.

Obligation to Respond: Required to obtain or retain benefits. Statutory authority for this information collection is contained in sections 4(i) and (j), 303(r), and 409 of the Communications Act of 1934, as amended, 47 U.S.C. 154(i) and (j), 303(r), and 409.

Total Annual Burden: 25,875 hours.

Total Annual Cost: $0.00.

Privacy Act Impact Assessment: No impact(s).

Nature and Extent of Confidentiality: Consistent with the Commission's rules on confidential treatment of submissions, under 47 CFR 0.459, a presenter may request confidential treatment of *ex parte* presentations. In addition, the Commission will permit parties to remove metadata containing confidential or privileged information, and the Commission will also not require parties to file electronically *ex parte* notices that contain confidential information. The Commission will, however, require a redacted version to be filed electronically at the same time the paper filing is submitted, and that the redacted version must be machine-readable whenever technically possible.

Needs and Uses: The Commission's rules, under 47 CFR 1.1206, require that a public record be made of *ex parte* presentations (*i.e.,* written presentations not served on all parties to the proceeding or oral presentations as to which all parties have not been given notice and an opportunity to be present) to decision-making personnel in ''permit-but-disclose'' proceedings, such as notice-and-comment rulemakings and declaratory ruling proceedings.

On February 2, 2011, the FCC released a *Report and Order and Further Notice of Proposed Rulemaking,* GC Docket Number 10–43, FCC 11–11, which amended and reformed the Commission's rules on *ex parte* presentations (47 CFR 1.1206(b)(2)) made in the course of Commission rulemakings and other permit-but-disclose proceedings. The modifications to the existing rules adopted in this Report and Order require that parties file more descriptive summaries of their *ex parte* contacts, by ensuring that other parties and the public have an adequate opportunity to review and respond to information submitted *ex parte,* and by improving the FCC's oversight and enforcement of the *ex parte* rules. The modified *ex parte* rules provide as follows: (1) *Ex parte* notices will be required for all oral *ex parte* presentations in permit-but-disclose proceedings, not just for those presentations that involve new information or arguments not already in the record; (2) If an oral *ex parte* presentation is limited to material already in the written record, the notice must contain either a succinct summary of the matters discussed or a citation to the page or paragraph number in the party's written submission(s) where the matters discussed can be found; (3) Notices for all *ex parte* presentations must include the name of the person(s) who made the *ex parte* presentation as well as a list of all persons attending or otherwise participating in the meeting at which the presentation was made; (4) Notices of *ex parte* presentations made outside the Sunshine period must be filed within two business days of the presentation; (5) The Sunshine period will begin on the day (including business days, weekends, and holidays) after issuance of the Sunshine notice, rather than when the Sunshine Agenda is issued (as the current rules provide); (6) If an *ex parte* presentation is made on the day the Sunshine notice is released, an *ex parte* notice must be submitted by the next business day, and any reply would be due by the following business day. If a permissible *ex parte* presentation is made during the Sunshine period (under an exception to the Sunshine period prohibition), the *ex parte* notice is due by the end of the same day on which the presentation was made, and any reply would need to be filed by the next business day. Any reply must be in writing and limited to the issues raised in the *ex parte* notice to which the reply is directed; (7) Commissioners and agency staff may continue to request *ex parte* presentations during the Sunshine period, but these presentations should be limited to the specific information required by the Commission; (8) *Ex parte* notices must be submitted electronically in machine-readable format. PDF images created by scanning a paper document may not be submitted, except in cases in which a word-processing version of the document is not available. Confidential information may continue to be submitted by paper filing, but a redacted version must be filed electronically at the same time the paper filing is submitted. An exception to the electronic filing requirement will be made in cases in which the filing party claims hardship. The basis for the hardship claim must be substantiated in the *ex parte* filing; (9) To facilitate stricter enforcement of the *ex parte* rules, the Enforcement Bureau is authorized to levy forfeitures for *ex parte* rule violations; (10) Copies of electronically filed *ex parte* notices must also be sent electronically to all staff and Commissioners present at the *ex parte* meeting so as to enable them to review the notices for accuracy and completeness. Filers may be asked to submit corrections or further information as necessary for compliance with the rules; and (11) Minor conforming and clarifying rule changes proposed in the Notice are adopted. The only changes entailing increased information collection are the requirement that parties making permissible *ex parte* presentations in restricted proceedings file an *ex parte* notice, and that *ex parte* notices contain either a summary of the presentation or a reference to where the information can be found in the written record, and that *ex parte* notices list all persons attending the presentation.

The information is used by parties to permit-but-disclose proceedings, including interested members of the public, to respond to the arguments made and data offered in the presentations. The responses may then be used by the Commission in its decision-making. The availability of the *ex parte* materials ensures that the Commission's decisional processes are fair, impartial, and comport with the concept of due process in that all interested parties can know of and respond to the arguments made to the decision-making officials.

On May 10, 2011, the Commission published a notice in the **Federal Register** (76 FR 27048) announcing that it had sought OMB approval under the emergency processing provisions of the PRA for this information collection. OMB approved this collection as an emergency on May 16, 2011. With this 60-day notice, the Commission is beginning the regular PRA process seeking OMB approval for this collection for three years.

Federal Communications Commission.

Marlene H. Dortch,

Secretary, Office of the Secretary, Office of Managing Director.

[FR Doc. 2011–19408 Filed 7–29–11; 8:45 am]

BILLING CODE 6712–01–P

FEDERAL COMMUNICATIONS COMMISSION

Information Collection Being Submitted to the Office of Management and Budget for Review and Approval

AGENCY: Federal Communications Commission.

ACTION: Notice and request for comments.

SUMMARY: The Federal Communications Commission (FCC), as part of its continuing effort to reduce paperwork burdens, invites the general public and other Federal agencies to take this opportunity to comment on the following information collection, as required by the Paperwork Reduction Act (PRA) of 1995. Comments are requested concerning (a) Whether the proposed collection of information is necessary for the proper performance of the functions of the Commission, including whether the information shall have practical utility; (b) the accuracy of the Commission's burden estimate; (c) ways to enhance the quality, utility, and clarity of the information collected; (d) ways to minimize the burden of the collection of information on the respondents, including the use of automated collection techniques or other forms of information technology; and (e) ways to further reduce the information collection burden on small business concerns with fewer than 25 employees.

The FCC may not conduct or sponsor a collection of information unless it displays a currently valid control number. No person shall be subject to any penalty for failing to comply with a collection of information subject to the PRA that does not display a valid Office of Management and Budget (OMB) control number.

DATES: Written comments should be submitted on or before August 31, 2011. If you anticipate that you will be submitting comments, but find it difficult to do so within the period of time allowed by this notice, you should advise the contacts below as soon as possible.

ADDRESSES: Direct all PRA comments to Nicholas A. Fraser, OMB, via fax 202–395–5167, or via e-mail *Nicholas_A._Fraser@omb.eop.gov;* and to Cathy Williams, FCC, via e-mail *PRA@fcc.gov* and to *Cathy.Williams@fcc.gov.* Include in the comments the OMB control number as shown in the ''Supplementary Information'' section below.

FOR FURTHER INFORMATION CONTACT: For additional information or copies of the information collection, contact Cathy Williams at (202) 418–2918. To view a copy of this information collection request (ICR) submitted to OMB: (1) Go to the Web page *http://www.reginfo.gov/public/do/PRAMain,* (2) look for the section of the Web page called ''Currently Under Review,'' (3) click on the downward-pointing arrow in the ''Select Agency'' box below the ''Currently Under Review'' heading, (4) select ''Federal Communications Commission'' from the list of agencies presented in the ''Select Agency'' box, (5) click the ''Submit'' button to the right of the ''Select Agency'' box, (6) when the list of FCC ICRs currently under review appears, look for the OMB control number of this ICR and then click on the ICR Reference Number. A copy of the FCC submission to OMB will be displayed.

SUPPLEMENTARY INFORMATION:

OMB Control Number: 3060–1145.

Title: Structure and Practices of the Video Relay Service Program, CG Docket No. 10–51.

Form Number: N/A.

Type of Review: Revision of a currently approved collection.

Respondents: Business or other for-profit.

Number of Respondents and Responses: 20 respondents; 1,423 responses.

Estimated Time per Response: .5 hours (30 minutes) to 50 hours.

Frequency of Response: Annual, monthly, on occasion, one-time, and semi-annually reporting requirements; recordkeeping and third party disclosure requirements.

Obligation to Respond: Required to obtain or retain benefit. The statutory authority for the information collection requirements is found at Section 225 of the Communications Act, 47 U.S.C. 225. The law was enacted on July 26, 1990, as Title IV of the ADA, Pub. L. 101–336, 104 Stat. 327, 366–69.

Total Annual Burden: 4,632 hours.

Total Annual Cost: $35,600.

Nature and Extent of Confidentiality: An assurance of confidentiality is not offered because this information collection does not require the collection of personally identifiable information (PII) from individuals.

Privacy Impact Assessment: No impact(s).

Needs and Uses: On April 6, 2011, in document FCC 11–54, the Commission released a *Report and Order,* published at 76 FR 24393, May 2, 2011, adopting final rules designed to eliminate the waste, fraud and abuse that has plagued the VRS program and had threatened its ability to continue serving Americans who use it and its long-term viability. The Report and Order contains information collection requirements with respect to the following eight requirements, all of which aims to ensure the sustainability and integrity of the TRS program and the TRS Fund. Though the Report and Order emphasizes VRS, many of the requirements also apply to other or all forms of TRS—which includes the adoption of the interim rule, several new information collection requirements; and all the proposed information collection requirements, except the ''Transparency and the Disclosure of Provider Financial and Call Data'' requirement, as previously proposed and published at 75 FR 51735, August 23, 2010.

(a) *Provider Certification Under Penalty of Perjury.* The Chief Executive Officer (CEO), Chief Financial Officer (CFO), or other senior executive of a TRS provider shall certify, under penalty of perjury, that: (1) Minutes submitted to the Interstate TRS Fund (Fund) administrator for compensation were handled in compliance with section 225 of the Act and the Commission's rules and orders, and are not the result of impermissible financial incentives, or payments or kickbacks, to generate calls, and (2) cost and demand data submitted to the Fund administrator related to the determination of compensation rates or methodologies are true and correct.

(b) *Requiring Providers To Submit Information About New and Existing Call Centers.* VRS providers shall submit a written statement to the Commission and the TRS Fund administrator containing the locations of all of their call centers that handle VRS calls, including call centers located outside the United States, twice a year, on April 1st and October 1st. In addition to the street address of each call center, the rules require that these statements contain (1) The number of individual CAs and CA managers employed at each call center; and (2) the name and contact information (phone number and e-mail address) for the managers at each call center. (3) VRS providers shall notify the Commission and the TRS Fund administrator in writing at least 30 days prior to any change to their call centers' locations, including the opening, closing, or relocation of any center.

(c) *Data Filed With the Fund Administrator To Support Payment*

Claims. VRS providers shall provide the following data associated with each VRS call for which a VRS provider seeks compensation in its filing with the Fund Administrator: (1) The call record ID sequence; (2) CA ID number; (3) session start and end times; (4) conversation start and end times; (5) incoming telephone number and IP address (if call originates with an IP-based device) at the time of call; (6) outbound telephone number and IP address (if call terminates with an IP-based device) at the time of call; (7) total conversation minutes; (8) total session minutes; (9) the call center (by assigned center ID number) that handles the call; and (10) the URL address through which the call was initiated.

(2) All VRS and IP Relay providers shall submit speed of answer compliance data to the Fund administrator.

(d) *Automated Call Data Collection.* TRS providers shall use an automated record keeping system to capture the following data when seeking compensation from the Fund: (1) The call record ID sequence; (2) CA ID number; (3) session start and end times, at a minimum to the nearest second; (4) conversation start and end times, at a minimum to the nearest second; (5) incoming telephone number (if call originates with a telephone) and IP address (if call originates with an IP-based device) at the time of the call; (6) outbound telephone number and IP address (if call terminates to an IP-based device) at the time of call; (7) total conversation minutes; (8) total session minutes; and (9) the call center (by assigned center ID number) that handles the call.

(e) *Record Retention.* Internet-based TRS providers shall retain the following data that is used to support payment claims submitted to the Fund administrator for a minimum of five years, in an electronic format: (1) The call record ID sequence; (2) CA ID number; (3) session start and end times; (4) conversation start and end times; (5) incoming telephone number and IP address (if call originates with an IP-based device) at the time of call; (6) outbound telephone number and IP address (if call terminates with an IP-based device) at the time of call; (7) total conversation minutes; (8) total session minutes; and (9) the call center (by assigned center ID number) that handles the call.

(f) *Third-party Agreements.* (1) VRS providers shall maintain copies of all third-party contracts or agreements so that copies of these agreements will be available to the Commission and the TRS Fund administrator upon request. Such contracts or agreements shall provide detailed information about the nature of the services to be provided by the subcontractor.

(2) VRS providers shall describe all agreements in connection with marketing and outreach activities, including those involving sponsorships, financial endorsements, awards, and gifts made by the provider to any individual or entity, in the providers' annual submissions to the TRS Fund administrator.

(g) *Whistleblower Protection.* TRS providers shall provide information about these TRS whistleblower protections, including the right to notify the Commission's Office of Inspector General or its Enforcement Bureau, to all employees and contractors, in writing. Providers that already disseminate their internal business policies to their employees in writing (*e.g.* in employee handbooks, policies and procedures manuals, or bulletin board postings—either online or in hard copy) must also explicitly include these TRS whistleblower protections in those written materials.

(h) *Required Submission for Waiver Request.* Potential VRS providers wishing to receive a temporary waiver of the provider's eligibility rules, shall provide, in writing, a description of the specific requirement(s) for which it is seeking a waiver, along with documentation demonstrating the applicant's plan and ability to come into compliance with all of these requirements (other than the certification requirement) within a specified period of time, which shall not exceed three months from the date on which the rules become effective. Evidence of the applicant's plan and ability to come into compliance with the new rules shall include the applicant's detailed plan for modifying its business structure and operations in order to meet the new requirements, along with submission of the following relevant documentation to support the waiver request:

- A copy of each deed or lease for each call center operated by the applicant;
- A list of individuals or entities that hold at least a 10 percent ownership share in the applicant's business and a description of the applicant's organizational structure, including the names of its executives, officers, partners, and board of directors;
- A list of all of the names of applicant's full-time and part-time employees;
- Proofs of purchase or license agreements for use of all equipment and/or technologies, including hardware and software, used by the applicant for its call center functions, including but not limited to, automatic call distribution (ACD) routing, call setup, mapping, call features, billing for compensation from the TRS fund, and registration;
- Copies of employment agreements for all of the provider's executives and CAs;
- A list of all financing arrangements pertaining to the provision of Internet-based relay service, including documentation on loans for equipment, inventory, property, promissory notes, and liens;
- Copies of all other agreements associated with the provision of Internet-based relay service; and a list of all sponsorship arrangements (*e.g.,* those providing financial support or in-kind interpreting or personnel service for social activities in exchange for brand marketing), including any associated agreements.

Federal Communications Commission.

Marlene H. Dortch,

Secretary, Office of the Secretary, Office of Managing Director.

[FR Doc. 2011–19409 Filed 7–29–11; 8:45 am]

BILLING CODE 6712–01–P

FEDERAL ELECTION COMMISSION

[Notice 2011–10]

Filing Dates for the New York Special Election in the 9th Congressional District

AGENCY: Federal Election Commission.

ACTION: Notice of filing dates for special election.

SUMMARY: New York has scheduled a Special General Election on September 13, 2011, to fill the U.S. House seat in the 9th Congressional District vacated by Representative Anthony Weiner.

Committees required to file reports in connection with the Special General Election on September 13, 2011, shall file a 12-day Pre-General Report, and a 30-day Post-General Report.

FOR FURTHER INFORMATION CONTACT: Mr. Kevin R. Salley, Information Division, 999 E Street, N.W., Washington, DC 20463; *Telephone:* (202) 694–1100; Toll Free (800) 424–9530.

SUPPLEMENTARY INFORMATION:

Principal Campaign Committees

All principal campaign committees of candidates who participate in the New York Special General Election shall file a 12-day Pre-General Report on September 1, 2011, and a 30-day Post-General Report on October 13, 2011.

(See chart below for the closing date for each report).

Note that these reports are in addition to the campaign committee's year-end filing in January 2012. (See chart below for the closing date for each report).

Unauthorized Committees (PACs and Party Committees)

Political committees filing on a semi-annual basis in 2011 are subject to special election reporting if they make previously undisclosed contributions or expenditures in connection with the New York Special General Election by the close of books for the applicable report(s). (See chart below for the closing date for each report).

Committees filing monthly that make contributions or expenditures in connection with the New York Special General Election will continue to file according to the monthly reporting schedule.

Additional disclosure information in connection with the New York Special Election may be found on the FEC Web site at *http://www.fec.gov/info/report_dates_2011.shtml.*

Disclosure of Lobbyist Bundling Activity

Campaign committees, party committees and Leadership PACs that are otherwise required to file reports in connection with the special elections must simultaneously file FEC Form 3L if they receive two or more bundled contributions from lobbyists/registrants or lobbyist/registrant PACs that aggregate in excess of $16,200 during the special election reporting periods (see charts below for closing date of each period). 11 CFR 104.22(a)(5)(v).

CALENDAR OF REPORTING DATES FOR NEW YORK SPECIAL ELECTION—COMMITTEES INVOLVED IN THE SPECIAL GENERAL (09/13/11) MUST FILE

Report	Close of books [1]	Reg./cert. & overnight mailing deadline	Filing deadline
Pre-General	08/24/11	08/29/11	09/01/11
Post-General	10/03/11	10/13/11	10/13/11
October Quarterly	.....	WAIVED	
Year-End	12/31/11	01/31/12	01/31/12

[1] These dates indicate the beginning and the end of the reporting period. A reporting period always begins the day after the closing date of the last report filed. If the committee is new and has not previously filed a report, the first report must cover all activity that occurred before the committee registered as a political committee with the Commission up through the close of books for the first report due.

On behalf of the Commission,

Dated: July 25, 2011.

Cynthia L. Bauerly,

Chair, Federal Election Commission.

[FR Doc. 2011–19311 Filed 7–29–11; 8:45 am]

BILLING CODE 6715–01–P

FEDERAL ELECTION COMMISSION

Sunshine Act Notice

AGENCY: Federal Election Commission.

DATE AND TIME: *Thursday, August 4, 2011 at 10 a.m.*

PLACE: 999 E Street, NW., Washington, DC (Ninth Floor)

STATUS: This meeting will be open to the public.

ITEMS TO BE DISCUSSED:

Correction and Approval of the Minutes for the Meeting of July 21, 2011

Draft Advisory Opinion 2011–14: Utah Bankers Association and Utah Bankers Association Action PAC

Proposed Final Audit Report on John Edwards for President

Audit Division Recommendation Memorandum on Nader for President 2008 (NFP)

Management and Administrative Matters

Individuals who plan to attend and require special assistance, such as sign language interpretation or other reasonable accommodations, should contact Shawn Woodhead Werth, Commission Secretary and Clerk, at (202) 694–1040, at least 72 hours prior to the hearing date.

PERSON TO CONTACT FOR INFORMATION: Judith Ingram, Press Officer, *Telephone:* (202) 694–1220.

Shawn Woodhead Werth,

Secretary and Clerk of the Commission.

[FR Doc. 2011–19547 Filed 7–28–11; 4:15 pm]

BILLING CODE 6715–01–P

FEDERAL ELECTION COMMISSION

[Notice 2011–11]

Policy Statement Regarding a Program for Requesting Consideration of Legal Questions by the Commission

AGENCY: Federal Election Commission.

ACTION: Policy Statement.

SUMMARY: The Federal Election Commission (''Commission'') is adopting a program providing for a means by which persons and entities may have a legal question considered by the Commission earlier in both the report review process and the audit process.

DATES: Effective August 1, 2011.

FOR FURTHER INFORMATION CONTACT: Lorenzo Holloway, Assistant General Counsel, or Allison T. Steinle, Attorney, 999 E Street, NW., Washington, DC 20463, (202) 694–1650 or (800) 424–9530.

SUPPLEMENTARY INFORMATION: The Commission is adopting a program providing for a means by which persons and entities may have a legal question considered by the Commission earlier in both the report review process and the audit process. Specifically, when the Office of Compliance (''OC'') (which includes the Reports Analysis Division and the Audit Division) requests that a person or entity take corrective action during the report review or audit process, if the person or entity disagrees with the request based upon a material dispute on a question of law, the person or entity may seek Commission consideration of the issue pursuant to this procedure.

I. Procedures

Within 15 business days of a determination by the Reports Analysis Division or Audit Division that a person or entity remains obligated to take corrective action to resolve an issue that has arisen during the report review or audit process, the person or entity may seek Commission consideration if a material dispute on a question of law exists with respect to the recommended

corrective action.[1] A ''determination'' for purposes of triggering the 15 business days is either: (1) notification to the person or entity of legal guidance prepared by the Office of General Counsel (''OGC'') at the request of the Reports Analysis Division recommending the corrective action; or (2) the end of the Committee's Audit Exit Conference response period.

Any request for consideration by a Committee during the report review process or the audit process shall be limited to questions of law on material issues, when: (1) The legal issue is novel, complex, or pertains to an unsettled question of law; (2) there has been intervening legislation, rulemaking, or litigation since the Commission last considered the issue; or (3) the request to take corrective action is contrary to or otherwise inconsistent with prior Commission matters dealing with the same issue. The request must specify the question of law at issue and why it is subject to Commission consideration. It should discuss, when appropriate, prior Commission matters raising the same issue, relevant court decisions, and any other analysis of the issue that may assist the Commission in its decision-making. The Commission will not consider factual disputes under this procedure, and any requests for consideration other than on questions of law on material issues will not be granted.

All requests, including any extension requests, should be directed to the Commission Secretary, Federal Election Commission, 999 E Street, NW., Washington, DC 20463, and must be received within 15 business days of the determination of corrective action. Upon receipt of a request, the Commission Secretary shall forward a copy of any request to each Commissioner, the General Counsel, and the Staff Director.

Any request for an extension of time to file will be considered on a case-by-case basis and will only be granted if good cause is shown, and the Commission approves the extension request by four affirmative votes within five business days of receipt of the extension request. Within five business days of notification to the Commissioners of a request for consideration of a legal question, if two or more Commissioners agree that the Commission should consider the request, OGC will prepare a recommendation and, within 15 business days thereafter, circulate the recommendation in accordance with all applicable Commission directives.

After the recommendation is circulated for a Commission vote, in the event of an objection, the matter shall be automatically placed on the next meeting agenda consistent with the Sunshine Act, 5 U.S.C. 552b(g), and applicable Commission regulations, 11 CFR part 2. However, if within 60 business days of the filing of a request for consideration, the Commission has not resolved the issue or provided guidance on how to proceed with the matter by the affirmative vote of four or more Commissioners, the OC may proceed with the matter. After the 60 business days has elapsed, any requestor will be provided a copy of OGC's recommendation memorandum and an accompanying vote certification, or if no such certification exists, a cover page stating the disposition of the memoranda. Confidential information will be redacted as necessary.

After the request review process has concluded, or a Final Audit Report has been approved, a copy of the request for consideration, as well as the recommendation memorandum and accompanying vote certification or disposition memorandum, will be placed with the Committee's filings or audit documents on the Commission's website within 30 days. These materials will also be placed a Commission webpage dedicated to legal questions considered by the Commission under this program.

This procedure is not intended to circumvent or supplant the Advisory Opinion process provided under 2 U.S.C. 437f and 11 CFR part 112. Accordingly, any legal issues that qualify for consideration under the Advisory Opinion process are not appropriate for consideration under this new procedure. Additionally, this policy statement does not supersede the procedures regarding eligibility and entitlement to public funds set forth in Commission Directive 24 and 11 CFR 9005.1, 9033.4, 9033.6 or 9033.10.

II. Annual Review

No later than July 1 of each year, the OC and OGC shall jointly prepare and distribute to the Commission a written report containing a summary of the requests made under the program over the previous year and a summary of the Commission's consideration of those requests and any action taken thereon. The annual report shall also include the Chief Compliance Officer's and the General Counsel's assessment of whether, and to what extent, the program has promoted efficiency and fairness in both the Commission's report review process and in the audit process, as well as their recommendations, if any, for modifications to the program.

The Commission may terminate or modify this program through additional policy statements at any time by an affirmative vote of four of its members.

Dated: July 26, 2011.

Cynthia L. Bauerly,

Chair, Federal Election Commission.

[FR Doc. 2011–19312 Filed 7–29–11; 8:45 am]

BILLING CODE 6715–01–P

[1] Many disputes involving corrective action requests hinge on questions of fact rather than questions of law, and thus are not appropriate for this procedure.

FEDERAL MINE SAFETY AND HEALTH REVIEW COMMISSION

Sunshine Act Notice

July 25, 2011.

TIME AND DATE: 10 a.m., Thursday, August 4, 2011.

PLACE: The Richard V. Backley Hearing Room, 9th Floor, 601 New Jersey Avenue, NW., Washington, DC.

STATUS: Open.

MATTERS TO BE CONSIDERED: The Commission will hear oral argument in the following matters: *Big Ridge, Inc.,* Docket Nos. LAKE 2011–116–R, et al., and *Peabody Midwest Mining, LLC,* Docket Nos. LAKE 2011–118–R, *et al.* (Issues include whether the Commission should grant an application for temporary relief from orders issued by the Secretary of Labor requiring that mine operators provide certain information and records to the Secretary.)

Any person attending this oral argument who requires special accessibility features and/or auxiliary aids, such as sign language interpreters, must inform the Commission in advance of those needs. Subject to 29 CFR 2706.150(a)(3) and § 2706.160(d).

CONTACT PERSON FOR MORE INFO: Jean Ellen (202) 434–9950 / (202) 708–9300 for TDD Relay / 1–800–877–8339 for toll free.

Emogene Johnson,

Administrative Assistant.

[FR Doc. 2011–19462 Filed 7–28–11; 11:15 am]

BILLING CODE 6735–01–P

FEDERAL TRADE COMMISSION

Agency Information Collection Activities; Submission for OMB Review; Comment Request

AGENCY: Federal Trade Commission (''Commission'' or ''FTC'').

ACTION: Notice; and request for public comment.

SUMMARY: The FTC intends to conduct a survey of consumers to advance its understanding of the prevalence of consumer fraud and to allow the FTC to better serve people who experience fraud. The survey is a follow-up to two previous surveys—the first was conducted in May and June of 2003 and the second in November and December of 2005. Before gathering this information, the FTC is seeking public comments on its proposed consumer research. The information collection requirements described below are being submitted to the Office of Management and Budget (''OMB'') for review, as required by the Paperwork Reduction Act (''PRA'').

DATES: Comments must be submitted on or before August 31, 2011.

ADDRESSES: Interested parties may file a comment online or on paper, by following the instructions in the ''Request for Comment'' part of the **SUPPLEMENTARY INFORMATION** section below. Write ''Consumer Fraud Survey, Project No. P105502'' on your comment, and file your comment online at: *https://ftcpublic.commentworks.com/ftc/fraudsurvey2,* by following the instructions on the web-based form. If you prefer to file your comment on paper, mail or deliver your comment to the following address: Federal Trade Commission, Office of the Secretary, Room H–113 (Annex J), 600 Pennsylvania Avenue, NW., Washington, DC 20580.

FOR FURTHER INFORMATION CONTACT: Requests for additional information should be addressed to Keith B. Anderson, Economist, Bureau of Economics, Federal Trade Commission, 600 Pennsylvania Avenue NW., Mail Stop NJ–4136, Washington, DC 20580. Telephone: (202) 326–3428.

SUPPLEMENTARY INFORMATION:

1. Background

On September 1, 2010, the FTC sought comment on the information collection requirements associated with the proposed Fraud Survey (75 FR 53697). No comments were received. Pursuant to the OMB regulations, 5 CFR part 1320, that implement the PRA, 44 U.S.C. 3501–3521, the Commission is providing this second opportunity for public comment. All comments should be filed as prescribed in the **ADDRESSES** section above, and must be received on or before August 31, 2011.

In 2003, OMB approved the FTC's request to conduct a survey on consumer fraud. The FTC completed the consumer research in June 2003 and issued its report, ''Consumer Fraud in the United States: An FTC Survey,'' in August 2004 (*http://www.ftc.gov/reports/consumerfraud/040805confraudrpt.pdf*).

In November 2005, OMB approved the Commission's request to reinstate this clearance. The second survey was conducted in November and December 2005. A report, ''Consumer Fraud in the United States: The Second FTC Survey,'' detailing the results of that survey, was issued in October 2007 (*http://www.ftc.gov/opa/2007/10/fraud.pdf*). The 2005 survey asked about consumers' experiences during the previous year with 14 specific and two more general types of fraud. Among frauds covered by the survey were whether the person had purchased a weight-loss product that did not work as promised, whether the person had fallen victim to an advance-fee loan scam, and whether the person had paid someone to remove derogatory information from his or her credit report. According to the survey results, 30.2 million adults in the United States—13.5 percent of all adults in the country—had been a victim during the previous year of one or more of the frauds included in the survey.

Among the 14 specific frauds included in the survey, the most frequently reported was the purchase of a weight-loss product that the seller represented would allow the user to easily lose a substantial amount of weight or lose the weight without diet or exercise. In fact, consumers who tried the product found that they only lost a little of the weight they had expected to lose or failed to lose any weight at all. This was experienced by 4.8 million adults—2.1 percent of the adult population.

2. Description of the Collection of Information and Proposed Use

The FTC proposes to conduct a telephone survey of 3,600 randomly-selected consumers nationwide age 18 and over—100 in a pretest and 3,500 in the main survey—in order to gather specific information on the incidence of consumer fraud in the general population. To obtain a more reliable picture of the experience of demographic groups that the earlier surveys found to be at an elevated risk of becoming victims of consumer fraud—including Hispanics, African Americans, and Native Americans—the survey may oversample members of these groups. All information will be collected on a voluntary basis, and information on the identities of individual participants will not be collected. Subject to obtaining OMB clearance, the FTC will work with a consumer research firm to identify consumers and conduct the survey. The results will assist the FTC in determining the incidence of consumer fraud in the general population and whether its type or frequency is changing. This information will inform the FTC about how best to combat consumer fraud.

The FTC intends to use a sample size similar to that used in the 2005 survey. Many of the questions will be similar to the 2005 survey so that the results from it can be used as a baseline for a time-series analysis.[1] The FTC may choose to conduct another follow-up survey in approximately five years.

3. Estimated Hours Burden

The FTC will pretest the survey on approximately 100 respondents to ensure that all questions are easily understood. This pretest will take approximately 17 minutes per person[2] and 28 hours as a whole (100 respondents × 17 minutes each). Answering the consumer survey will require approximately 15 minutes per respondent and 875 hours as a whole (3,500 respondents × 15 minutes each). Thus, cumulative total burden hours will approximate 903 hours.

4. Estimated Cost Burden

The cost per respondent should be negligible. Participation is voluntary and will not require start-up, capital, or labor expenditures by respondents.

5. Request for Comment

You can file a comment online or on paper. For the Commission to consider your comment, we must receive it on or before August 31, 2011. Write ''Consumer Fraud Survey, Project No. P105502'' on your comment. Your comment—including your name and your state—will be placed on the public record of this proceeding, including, to the extent practicable, on the public Commission Web site, at *http://www.ftc.gov/os/publiccomments.shtm.* As a matter of discretion, the Commission tries to remove individuals' home contact information from comments before placing them on the Commission Web site.

Because your comment will be made public, you are solely responsible for making sure that your comment does

[1] The survey instrument for the 2005 Consumer Fraud Survey is attached to the 2007 report (referenced above) as Appendix B.

[2] Staff originally estimated 15 minutes to complete the pretest, the same time as that needed for the actual survey. The revised estimate takes further into account the presumed added time required to respond to questions unique to the pretest itself.

not include any sensitive personal information, like anyone's Social Security number, date of birth, driver's license number or other state identification number or foreign country equivalent, passport number, financial account number, or credit or debit card number. You are also solely responsible for making sure that your comment does not include any sensitive health information, like medical records or other individually identifiable health information. In addition, do not include any ''[t]rade secret or any commercial or financial information which is obtained from any person and which is privileged or confidential,'' as provided in Section 6(f) of the FTC Act, 15 U.S.C. 46(f), and FTC Rule 4.10(a)(2), 16 CFR 4.10(a)(2). In particular, do not include competitively sensitive information such as costs, sales statistics, inventories, formulas, patterns, devices, manufacturing processes, or customer names.

If you want the Commission to give your comment confidential treatment, you must file it in paper form, with a request for confidential treatment, and you have to follow the procedure explained in FTC Rule 4.9(c), 16 CFR 4.9(c).[3] Your comment will be kept confidential only if the FTC General Counsel, in his or her sole discretion, grants your request in accordance with the law and the public interest.

Postal mail addressed to the Commission is subject to delay due to heightened security screening. As a result, we encourage you to submit your comments online. To make sure that the Commission considers your online comment, you must file it at *https://ftcpublic.commentworks.com/ftc/fraudsurvey2,* by following the instructions on the web-based form. If this Notice appears at *http://www.regulations.gov/#!home,* you also may file a comment through that Web site.

If you file your comment on paper, write ''Consumer Fraud Survey, Project No. P105502'' on your comment and on the envelope, and mail or deliver it to the following address: Federal Trade Commission, Office of the Secretary, Room H–113 (Annex J), 600 Pennsylvania Avenue, NW., Washington, DC 20580. If possible, submit your paper comment to the Commission by courier or overnight service.

Visit the Commission Web site at *http://www.ftc.gov* to read this Notice and the news release describing it. The FTC Act and other laws that the Commission administers permit the collection of public comments to consider and use in this proceeding as appropriate. The Commission will consider all timely and responsive public comments that it receives on or before August 31, 2011. You can find more information, including routine uses permitted by the Privacy Act, in the Commission's privacy policy, at *http://www.ftc.gov/ftc/privacy.htm.*

Comments on the information collection requirements subject to review under the PRA should additionally be submitted to OMB. If sent by U.S. mail, they should be addressed to Office of Information and Regulatory Affairs, Office of Management and Budget, Attention: Desk Officer for the Federal Trade Commission, New Executive Office Building, Docket Library, Room 10102, 725 17th Street, NW., Washington, DC 20503. Comments sent to OMB by U.S. postal mail, however, are subject to delays due to heightened security precautions. Thus, comments instead should be sent by facsimile to (202) 395–5167.

David C. Shonka,

Acting General Counsel.

[FR Doc. 2011–19367 Filed 7–29–11; 8:45 am]

BILLING CODE 6750–01–P

[3] In particular, the written request for confidential treatment that accompanies the comment must include the factual and legal basis for the request, and must identify the specific portions of the comment to be withheld from the public record. *See* FTC Rule 4.9(c), 16 CFR 4.9(c).

FEDERAL TRADE COMMISSION

[File No. 111 0083]

Perrigo Company and Paddock Laboratories, Inc.; Analysis of Agreement Containing Consent Orders To Aid Public Comment

AGENCY: Federal Trade Commission.

ACTION: Proposed Consent Agreement.

SUMMARY: The consent agreement in this matter settles alleged violations of federal law prohibiting unfair or deceptive acts or practices or unfair methods of competition. The attached Analysis to Aid Public Comment describes both the allegations in the draft complaint and the terms of the consent order—embodied in the consent agreement—that would settle these allegations.

DATES: Comments must be received on or before August 26, 2011.

ADDRESSES: Interested parties may file a comment online or on paper, by following the instructions in the Request for Comment part of the **SUPPLEMENTARY INFORMATION** section below. Write ''Perrigo Paddock, File No. 111 0083'' on your comment, and file your comment online at *https://ftcpublic.commentworks.com/ftc/perrigopaddockconsent,* by following the instructions on the Web-based form. If you prefer to file your comment on paper, mail or deliver your comment to the following address: Federal Trade Commission, Office of the Secretary, Room H–113 (Annex D), 600 Pennsylvania Avenue, NW., Washington, DC 20580.

FOR FURTHER INFORMATION CONTACT: Christine Palumbo (202–326–3330), FTC, Bureau of Competition, 600 Pennsylvania Avenue, NW., Washington, DC 20580.

SUPPLEMENTARY INFORMATION: Pursuant to section 6(f) of the Federal Trade Commission Act, 38 Stat. 721, 15 U.S.C. 46(f), and § 2.34 the Commission Rules of Practice, 16 CFR 2.34, notice is hereby given that the above-captioned consent agreement containing a consent order to cease and desist, having been filed with and accepted, subject to final approval, by the Commission, has been placed on the public record for a period of thirty (30) days. The following Analysis to Aid Public Comment describes the terms of the consent agreement, and the allegations in the complaint. An electronic copy of the full text of the consent agreement package can be obtained from the FTC Home Page (for July 26, 2011), on the World Wide Web, at *http://www.ftc.gov/os/actions.shtm.* A paper copy can be obtained from the FTC Public Reference Room, Room 130–H, 600 Pennsylvania Avenue, NW., Washington, DC 20580, either in person or by calling (202) 326–2222.

You can file a comment online or on paper. For the Commission to consider your comment, we must receive it on or before June 10, 2011. Write ''Perrigo Paddock, File No. 111 0083'' on your comment. Your comment B including your name and your state B will be placed on the public record of this proceeding, including, to the extent practicable, on the public Commission Web site, at *http://www.ftc.gov/os/publiccomments.shtm.* As a matter of discretion, the Commission tries to remove individuals' home contact information from comments before placing them on the Commission Web site.

Because your comment will be made public, you are solely responsible for making sure that your comment does not include any sensitive personal information, like anyone's Social Security number, date of birth, driver's license number or other state

identification number or foreign country equivalent, passport number, financial account number, or credit or debit card number. You are also solely responsible for making sure that your comment does not include any sensitive health information, like medical records or other individually identifiable health information. In addition, do not include any ''[t]rade secret or any commercial or financial information which is obtained from any person and which is privileged or confidential,'' as provided in Section 6(f) of the FTC Act, 15 U.S.C. 46(f), and FTC Rule 4.10(a)(2), 16 CFR 4.10(a)(2). In particular, do not include competitively sensitive information such as costs, sales statistics, inventories, formulas, patterns, devices, manufacturing processes, or customer names.

If you want the Commission to give your comment confidential treatment, you must file it in paper form, with a request for confidential treatment, and you have to follow the procedure explained in FTC Rule 4.9(c), 16 CFR 4.9(c).[1] Your comment will be kept confidential only if the FTC General Counsel, in his or her sole discretion, grants your request in accordance with the law and the public interest.

Postal mail addressed to the Commission is subject to delay due to heightened security screening. As a result, we encourage you to submit your comments online. To make sure that the Commission considers your online comment, you must file it at *https://ftcpublic.commentworks.com/ftc/perrigopaddockconsent* by following the instructions on the Web-based form. If this Notice appears at *http://www.regulations.gov/#!home,* you also may file a comment through that Web site.

If you file your comment on paper, write ''Perrigo Paddock, File No. 111 0083'' on your comment and on the envelope, and mail or deliver it to the following address: Federal Trade Commission, Office of the Secretary, Room H–113 (Annex D), 600 Pennsylvania Avenue, NW., Washington, DC 20580. If possible, submit your paper comment to the Commission by courier or overnight service.

Visit the Commission Web site at *http://www.ftc.gov* to read this Notice and the news release describing it. The FTC Act and other laws that the Commission administers permit the collection of public comments to consider and use in this proceeding as appropriate. The Commission will consider all timely and responsive public comments that it receives on or before August 26, 2011. You can find more information, including routine uses permitted by the Privacy Act, in the Commission's privacy policy, at *http://www.ftc.gov/ftc/privacy.htm.*

[1] In particular, the written request for confidential treatment that accompanies the comment must include the factual and legal basis for the request, and must identify the specific portions of the comment to be withheld from the public record. See FTC Rule 4.9(c), 16 CFR 4.9(c).

Analysis of Agreement Containing Consent Order To Aid Public Comment

I. Introduction

The Federal Trade Commission (''Commission'') has accepted, subject to final approval, an Agreement Containing Consent Orders (''Consent Agreement'') from Perrigo Company (''Perrigo'') and Paddock Laboratories, Inc. (''Paddock'') that is designed to remedy the anticompetitive effects resulting from Perrigo's acquisition of Paddock. Under the terms of the proposed Consent Agreement, the companies would be required to divest to Watson Pharmaceuticals, Inc. (''Watson'') Paddock's rights and assets necessary to manufacture and market generic: (1) Ammonium lactate external cream 12 percent (''ammonium lactate cream''); (2) ammonium lactate topical lotion 12 percent (''ammonium lactate lotion''); (3) ciclopirox shampoo 1 percent (''ciclopirox shampoo''); and (4) promethazine hydrochloride rectal suppository 12.5 mg and 25 mg (''promethazine suppository''). The proposed Consent Agreement also requires the companies to divest to Watson all of Perrigo's rights and assets necessary to manufacture and market generic clobetasol proprionate spray 0.05 percent (''clobetasol spray'') and diclofenac sodium topical solution 1.5 percent (''diclofenac solution''). Further, the proposed Consent Agreement prohibits the companies from accepting certain payments under a backup supply agreement between Paddock and Abbott Laboratories (''Abbott'') for Androgel, the branded version of testosterone gel 1 percent (''testosterone gel''), and entering into any ''pay-for-delay'' arrangements with Abbott.

The proposed Consent Agreement has been placed on the public record for thirty days for receipt of comments by interested persons. Comments received during this period will become part of the public record. After thirty days, the Commission will again review the proposed Consent Agreement and the comments received, and will decide whether it should withdraw from the proposed Consent Agreement, modify it, or make final the Decision and Order (''Order'').

Pursuant to a Purchase Agreement dated January 20, 2011, Perrigo plans to acquire substantially all of Paddock's assets for $540 million. The Commission's Complaint alleges that the proposed acquisition, if consummated, would violate Section 7 of the Clayton Act, as amended, 15 U.S.C. 18, and Section 5 of the FTC Act, as amended, 15 U.S.C. 45, by substantially lessening competition in the U.S. markets for the manufacture and sale of the following generic pharmaceuticals: (1) Ammonium lactate cream; (2) ammonium lactate lotion; (3) ciclopirox shampoo; (4) promethazine suppository; (5) clobetasol spray; (6) diclofenac solution (collectively, the ''Products''); and (7) testosterone gel. The proposed Consent Agreement will remedy the alleged violations in each of these markets.

II. The Products and Structure of the Markets

The proposed acquisition would reduce the number of generic suppliers in six generic drug markets. The number of generic suppliers has a direct and substantial impact on generic pricing, as each additional generic supplier can have a competitive impact on the market. Because there are multiple generic equivalents for each of the products at issue here and the branded products are substantially more expensive than the generic versions, the branded versions no longer significantly constrain the generics' pricing.

The proposed acquisition would reduce the number of competitors from three to two in four markets: (1) Ammonium lactate cream; (2) ammonium lactate lotion; (3) ciclopirox shampoo; and (4) promethazine suppository. The structure of each of these markets is as follows:

- The ammonium lactate cream and lotion products are both prescription moisturizers used to treat dry, scaly skin conditions, and help relieve itching. In 2010, annual sales of ammonium lactate cream were approximately $9.7 million, while sales of the ammonium lactate lotion totaled $19 million. The same firms compete in both markets—Perrigo, Paddock, and Taro Pharmaceutical Industries Ltd. (''Taro''), although Paddock has temporarily withdrawn its products from the U.S. market. Perrigo leads the market for ammonium lactate cream with a 70 percent share in the United States. Paddock has 17 percent of the market and Taro has 12 percent. In the market for ammonium lactate cream, the combined firm would account for 87 percent after the proposed acquisition. Perrigo and Paddock are the leading U.S. suppliers

of ammonium lactate lotion, with 43 percent and 50 percent of the market, respectively. Taro has only captured a 5 percent market share to date. Post-acquisition, Perrigo's share would increase to 93 percent of the market.

• Ciclopirox shampoo is a prescription shampoo used to treat seborrheic dermatitis, an inflammatory condition that causes flaky scales and patches on the scalp. Paddock is the leading supplier in the $14.5 million market for ciclopirox shampoo, with a share of approximately 83 percent. Perrigo, with a share of 16 percent, and E. Fougera & Co., with a 1 percent share, are the only other U.S. suppliers of the product. The proposed acquisition, therefore, would result in a combined market share of 99 percent.

• Promethazine suppository is indicated for a variety of uses, including to treat allergic reactions, to prevent and control motion sickness, and to relieve nausea and vomiting associated with surgery. Sales of the 12.5 mg and 25 mg strengths were approximately $7.9 million and $36.1 million in 2010, respectively. Perrigo, Paddock, and G&W Laboratories, Inc. (''G&W'') are the only U.S. suppliers of both strengths. For the 12.5 mg strength, Perrigo has 15 percent of the market, Paddock has 19 percent, and G&W has 66 percent. For the 25 mg strength, Perrigo has 15 percent of the market, Paddock has 20 percent, and G&W has 65 percent. A combined Perrigo and Paddock would possess 34 percent of the 12.5 mg market and 35 percent of the 25 mg market.

Both Perrigo and Paddock also are developing products for two future generic drug markets: (1) Clobetasol spray and (2) diclofenac solution. Clobetasol spray is a topical steroid used to treat moderate to severe psoriasis in adults. Diclofenac solution is a non-steroidal anti-inflammatory drug used to treat osteoarthritis of the knee. Perrigo and Paddock are among a limited number of suppliers that are capable of, and interested in, entering these markets in a timely manner. Accordingly, the proposed acquisition would eliminate important future competition in these markets.

Finally, the proposed acquisition also could inhibit important future competition in the testosterone gel market. Testosterone gel, marketed by Abbott under the brand name Androgel, is a prescription gel used to treat adult males with a testosterone deficiency. Perrigo is one of a limited number of suppliers capable of entering this future generic market in a timely manner. Pursuant to an agreement between Par Pharmaceutical Companies, Inc. (''Par''), Paddock, and Solvay Pharmaceuticals, the former owner of Androgel, Par agreed to delay introducing a generic version of Androgel in exchange for, among other things, payments under a backup supply agreement. That agreement has since been transferred to Paddock. The proposed acquisition would make Perrigo a party to that agreement, thereby enhancing Abbott's and Perrigo's ability to coordinate to delay the introduction of Perrigo's product.

III. Entry

Entry into the markets for the manufacture and sale of the products would not be timely, likely, or sufficient in its magnitude, character, and scope to deter or counteract the anticompetitive effects of the acquisition. Entry would not take place in a timely manner because the combination of generic drug development times and U.S. Food and Drug Administration (''FDA'') drug approval requirements take a minimum of two years. Furthermore, entry would not be likely because many of the relevant markets are small, so the limited sales opportunities available to a new entrant would likely be insufficient to warrant the time and investment necessary to enter.

IV. Effects of the Acquisition

The proposed acquisition would cause significant anticompetitive harm to consumers in the U.S. markets for ammonium lactate cream, ammonium lactate lotion, ciclopirox shampoo, and promethazine suppository. In generic pharmaceutical markets, pricing is heavily influenced by the number of competitors that participate in a given market. The evidence shows that with the entry of each additional competitor, the prices of the generic products at issue have decreased. Customers consistently state that the price of a generic drug decreases with the entry of the second, third, and even fourth competitor. In these markets, the proposed acquisition would eliminate one of only three competitors. The evidence indicates that anticompetitive effects—both unilateral and coordinated—are likely to result from a decrease in the number of independent competitors in these markets, thereby increasing the likelihood that customers will pay higher prices.

The proposed acquisition also eliminates or delays important future competition between Perrigo and Paddock in the U.S. markets for clobetasol spray and diclofenac solution. Perrigo's and Paddock's independent entry into these markets likely would have resulted in lower prices for customers. The proposed acquisition would deprive customers of the expected price decrease that would occur upon the parties' entry into these markets.

Similarly, the proposed acquisition increases the likelihood and degree of coordinated interaction between Perrigo and Abbott in the U.S. testosterone gel market. Perrigo would become a party to the Par/Paddock backup supply agreement, thereby enhancing Abbott's and Perrigo's ability to coordinate to delay the introduction of Perrigo's product. Perrigo's independent entry into the market likely would result in lower prices for customers. The proposed acquisition could therefore deprive customers of the expected price decrease that would ensue upon Perrigo's timely entry into the market.

V. The Consent Agreement

The proposed Consent Agreement effectively remedies the acquisition's anticompetitive effects in the relevant product markets by requiring a divestiture of the Products to a Commission-approved acquirer no later than ten days after the acquisition. The acquirer of the divested assets must receive the prior approval of the Commission. The Commission's goal in evaluating a possible purchaser of divested assets is to maintain the competitive environment that existed prior to the acquisition.

The Consent Agreement requires that the parties divest rights and assets related to the Products to Watson. Watson is the third largest generic drug manufacturer in the United States, and well-situated to manufacture and market the acquired products. Watson has extensive experience in the development, manufacturing, and distribution of generic pharmaceuticals, as well as experience transferring assets from other pharmaceutical companies. Watson has approximately 325 active products and an active product development pipeline. Moreover, Watson's acquisition of the divested assets does not in itself present competitive concerns because Watson does not compete, nor does it have plans to independently enter, any of the markets affected by the proposed transaction. With its resources, capabilities, strong reputation, and experience manufacturing and marketing generic products, Watson is well-positioned to replicate the competition that would be lost with the acquisition.

If the Commission ultimately determines that Watson is not an acceptable acquirer of the assets to be divested, or that the manner of the

divestitures to Watson is not acceptable, the parties must unwind the sale and divest the Products within six months of the date the Order becomes final to another Commission-approved acquirer. If the parties fail to divest within six months, the Commission may appoint a trustee to divest the Product assets.

The proposed remedy contains several provisions to ensure that the divestitures are successful. The Order requires Perrigo and Paddock to provide transitional services to enable Watson to obtain all of the necessary approvals from the FDA. These transitional services include technology transfer assistance to manufacture the Products in substantially the same manner and quality employed or achieved by Perrigo and Paddock. In addition, the parties must supply Watson with the Products pursuant to a supply agreement while they transfer the manufacturing technology to a third-party manufacturer of Watson's choice.

The Consent Agreement also preserves competition in the market for testosterone gel by prohibiting the parties from: (1) receiving any payments that accrue after the initial term of the backup supply agreement aside from those for manufacturing the product; and (2) entering into any anticompetitive pay-for-delay arrangements with Abbott regarding the testosterone gel product.

The Commission has appointed F. William Rahe of Quantic Regulatory Services, LLC (''Quantic'') as the Interim Monitor to oversee the asset transfer and to ensure Perrigo and Paddock's compliance with the provisions of the proposed Consent Agreement. Mr. Rahe is a senior consultant at Quantic and has several years of experience in the pharmaceutical industry. He is a highly-qualified expert on FDA regulatory matters and currently advises Quantic clients on achieving satisfactory regulatory compliance and interfacing with the FDA. In order to ensure that the Commission remains informed about the status of the proposed divestitures and the transfers of assets, the proposed Consent Agreement requires the parties to file reports with the Commission periodically until the divestitures and transfers are accomplished.

The purpose of this analysis is to facilitate public comment on the proposed Consent Agreement, and it is not intended to constitute an official interpretation of the proposed Order or to modify its terms in any way.

By direction of the Commission.

Richard C. Donohue,

Acting Secretary.

[FR Doc. 2011–19422 Filed 7–29–11; 8:45 am]

BILLING CODE 6750–01–P

DEPARTMENT OF HEALTH AND HUMAN SERVICES

[Document Identifier: OS–0990–New; 60-day Notice]

Agency Information Collection Request; 60-Day Public Comment Request

AGENCY: Office of the Secretary, HHS.

In compliance with the requirement of section 3506(c)(2)(A) of the Paperwork Reduction Act (PRA) of 1995, the Office of the Secretary (OS), Department of Health and Human Services, is publishing the following summary of a proposed information collection request for public comment. Interested persons are invited to send comments regarding this burden estimate or any other aspect of this collection of information, including any of the following subjects: (1) The necessity and utility of the proposed information collection for the proper performance of the agency's functions; (2) the accuracy of the estimated burden; (3) ways to enhance the quality, utility, and clarity of the information to be collected; and (4) the use of automated collection techniques or other forms of information technology to minimize the information collection burden.

To obtain copies of the supporting statement and any related forms for the proposed paperwork collections referenced above, e-mail your request, including your address, phone number, OMB number, and OS document identifier, to *Sherette.funncoleman@hhs.gov,* or call the Reports Clearance Office on (202) 690–6162. Written comments and recommendations for the proposed information collections must be directed to the OS Paperwork Clearance Officer at the above e-mail address within 60 days.

Proposed Project: Descriptive information of solutions provided to the Federal government in response to Challenge and Competition solicitations posted on *Challenge.gov.*— OMB No. 0990-New-Immediate Office of the Secretary.

Abstract: This request is to seek generic clearance for the collection of routine information requested of responders to solicitations the Federal government makes during the issuance of challenges and competitions posted on the General Service Administration (GSA)'s *Challenge.gov* Web site. Since passage of the America COMPETES Act of 2011, challenge competitions are increasingly being used by Federal agencies to solve complex problems and obtain innovative solutions. In this role, the Federal government places a description of a problem and parameters of the solution on the *Challenge.gov* Web site. The solutions are evaluated by the submitting agency and typically prizes (monetary and non-monetary) are awarded to the winning entries.

This clearance applies to challenges posted on Challenge.gov which uses a common platform for the solicitation of challenges from the public. Each agency designs the criteria for its solicitations based on the goals of the challenge and the specific needs of the agency. There is no standard submission format for solution providers to follow.

We anticipate that approximately 100 challenges would be issued each year by HHS, with an average of 15 submissions to each challenge solicitation. It is expected that other federal agencies will issue a similar number of challenges. There is no set schedule for the issuance of challenges; they are developed and issued on an ''as needs'' basis in response to issues the federal agency wishes to solve. The respondents to the challenges, who are participating voluntarily, are unlikely to reply to more than one or several of the challenges.

Although in recent memoranda the GSA and Office of Management and Budget (OMB) described circumstances whereby OMB approval of a PRA request is not needed, program officials at HHS have identified several sets of information that will typically need to be requested of solution providers to enable the solutions to be adequately evaluated by the federal agency issuing the challenge. These requests for additional information have been suggested to require a PRA review as they represent structured data requests.

There are three types of additional data that will be routinely requested by the federal agencies. These include the following:

Title of the submission. Due to the nature of the submission and evaluation processes, it is important that a title be requested and submitted for each submission in order to ensure the solution is correctly identified with its provider.

Identification of data resources. In many cases, the solution to a problem will require the solution provider to use data resources. Often, the nature of the data sets will be derived from Federal data resources, such as data.gov. Evaluations of solutions will often depend on the understanding of the selection of the data resource(s) used in the solution.

Description of methodology. For effective judging and evaluation, a description of the development methods for the solution to the challenge will be requested. For instance, a prize may be awarded to the solution of a challenge to develop an algorithm that enables reliable prediction of a certain event. A responder could submit the correct algorithm, but without the methodology, the evaluation process could not be adequately performed.

ESTIMATED ANNUALIZED BURDEN TABLE

Forms	Type of respondent	No. of respondents	No. of responses per respondent	Average burden (in hours) per response	Total burden hours
Challenge Template A	Individuals or Households	500	1	10/60	83.3
Challenge Template A	Organizations	500	1	10/60	83.3
Challenge Template A	Businesses	500	1	10/60	83.3
Challenge Template A	State, territory, tribal or local governments.	30	1	10/60	5
Challenge Template A	Federal government	30	1	10/60	5
Total		1,560			255.9

Mary Forbes,

Paperwork Reduction Act Clearance Officer, Office of the Secretary.

[FR Doc. 2011–19323 Filed 7–29–11; 8:45 am]

BILLING CODE 4150–03–P

DEPARTMENT OF HEALTH AND HUMAN SERVICES

Calculation of Annual Federal Medical Assistance Percentages for Indian Tribes for Use in the Title IV–E Foster Care, Adoption Assistance, and Kinship Guardianship Assistance Programs

AGENCY: Office of the Secretary, DHHS.

ACTION: Notice.

SUMMARY: This notice finalizes the methodology that will be used to calculate reimbursement rates applicable to fiscal years 2010 and beyond for assistance payments under the tribal Foster Care, Adoption Assistance and Guardianship Assistance Programs authorized by title IV–E of the Social Security Act. A Notice with Comment Period on this topic was previously published on October 8, 2010.

DATES: *Effective Date.* The methodology described in this Notice is effective upon publication.

A. Background

The Fostering Connections to Success and Increasing Adoptions Act of 2008 (''Fostering Connections Act, '' Pub. L. 110–351), authorizes Indian tribes, tribal organizations and tribal consortia to receive funding directly for Foster Care, Adoption Assistance, and Kinship Guardianship Assistance Programs under title IV–E of the Social Security Act (42 U.S.C. 679c). Such direct funding was authorized to begin in fiscal year (FY) 2010 for Indian tribes, tribal organizations or tribal consortia with approved title IV–E plans, or eligible Indian tribes may submit plans to operate such programs at any time in the future. Indian tribes not operating their own programs may receive title IV–E funds through cooperative agreements or contracts with the States within which they are located. The methodology described in this notice is also applicable in calculating reimbursement rates under such agreements beginning in FY 2010.

The Federal share of assistance payments for the Title IV–E Foster Care, Adoption Assistance and Kinship Guardianship Assistance Programs is calculated using the Federal Medical Assistance Percentage (FMAP), a match rate calculated annually for each State by the Department of Health and Human Services (HHS) according to a formula specified in statute (section 1905(b) of the Social Security Act, 42 U.S.C. 1396d(b)). The FMAP formula involves comparing the State's average per capita income over a three year period with the average per capita income of the U.S. as a whole for the same three year period, and results in FMAP rates that vary between statutory minimum and maximum levels of 50 and 83 percent. The formula produces higher Federal matching rates for jurisdictions with lower per capita incomes relative to the U.S. as a whole.

Indian tribes previously have not been authorized to directly administer Federal programs that use FMAPs and therefore tribal FMAPs have not previously been calculated. However, the Fostering Connections Act requires HHS to establish FMAP rates for Indian tribes, tribal organizations, or tribal consortia (Pub. L. 110–351, section 301(d); 42 U.S.C. 679c(d)). The Act further specifies that each Tribe's annual FMAP shall be based on the per capita income of the service population of the Indian tribe, tribal organization, or tribal consortium. However, no tribal FMAP shall be lower than the FMAP of any State in which the Indian tribe, tribal organization, or tribal consortium is located.

The FMAP rates calculated using the methodology described here will be used for Indian tribes' title IV–E Foster Care, Adoption Assistance, and Kinship Guardianship Assistance programs whether they are administered directly by the Indian tribe or through an agreement or contract with a title IV–E State agency per sections 474(a)(1) and (2) of the Social Security Act, 42 U.S.C. 674(a)(1) and (2). Thus, a State may also claim reimbursement for title IV–E allowable assistance payments made on behalf of tribal children served through agreements or contracts with Indian tribes at the higher of the FMAP rate applicable to the State or the FMAP rate for the involved Indian tribe.

B. Outreach Regarding the October 8, 2010, Federal Register Notice and Comments Received

On October 8, 2010, HHS published a **Federal Register** Notice requesting comments on its proposed methodology for calculating FMAP for Indian tribes. A 60-day comment period was provided. HHS mailed copies of the Notice to tribal chairman of all federally recognized Indian tribes and posted the Notice to several electronic listserves operated by the Department's Administration for Children and Families that are most relevant to tribal child welfare programs. Each of the letters and postings provided dates and call-in instructions for four conference calls that were to be held to describe the content of the Notice and answer any questions Tribes may have had about it. These calls were held on November 3, 4, 9 and 10, 2010.

A single set of written comments was received on the content of the **Federal**

Register Notice and the methodology for calculating tribal FMAP rates. These comments, from the National Indian Child Welfare Association (NICWA), supported several specific aspects of the proposed methodology. These include: (1) The use of the standard FMAP formula to calculate rates for Indian tribes, substituting the Indian tribe's per capita income in place of the State's; (2) the proposal to round each Indian tribe's rate up to the next higher whole number; (3) the extension of temporary FMAP increases as specified in Section 5001 of Public Law 111–5, ''the American Recovery and Reinvestment Act of 2009'' and Section 201 of Public Law 111–226, the ''Education, Jobs and Medicaid Assistance Act'' to Indian tribes as they apply to States; and (4) our recommendation to use, as a default, data for the population identified as American Indian or Alaska Native only in the Indian tribe's service area to calculate the FMAP rate, while being open to discussion if the Indian tribe believes another formulation better represents its service population.

The NICWA comments also expressed guarded support for our proposed methodology for calculating FMAP rates for consortia or tribal organizations serving multiple Indian tribes, noting the methodology ''may be appropriate'' but noting that individual situations may produce complicating factors of which NICWA is unaware. Neither we nor NICWA has yet identified specific cases in which the proposed methodology is problematic. However, we acknowledge that no methodology is guaranteed to work in all situations and remain willing to work with tribal organizations and consortia to consider alternate methods in cases where the proposed methodology proves inadequate.

NICWA did express the concern that our proposed data source for FMAP calculations for fiscal year 2012 and beyond involves 5-year per capita income estimates from the American Community Survey (ACS). These data were unavailable before the comment period closed. NICWA, supported by a resolution from the National Congress of American Indians, suggested that we extend the comment period for several months in order to allow a thorough examination of the new data, which was scheduled for release in December, 2010. By the time the NICWA comments were received on the last day of the comment period, it was too late to extend the comment period under the existing Federal Register Notice. We did consider re-opening the comment period and also considered finalizing only rates for 2010 and 2011 while asking anew for comments on the methodology for 2012 and beyond. However, we have decided not to reopen the comment period for two reasons. First, an examination of these new data, published December 14, 2010, reveal few differences between the rates produced using the ACS 5-year estimates and those produced using the 2000 decennial Census data NICWA supported. Second, while NICWA expressed apprehension because the new data was as yet unseen, neither NICWA nor any other organization has identified a viable alternative to these data for routine use. While individual Indian tribes may have alternative data sources, and we have said consistently that we will consider such alternative data as an Indian tribe may choose to submit, the 5-year ACS data is the only data set we have been able to identify that provides consistent information on the per capita incomes of the range of Indian tribes eligible to participate in the title IV–E Foster Care, Adoption Assistance, and Guardianship Assistance Programs. Without a viable alternative to consider, and new evidence that the proposed data source is viable for FY 2012 and beyond, we have decided to finalize the methodology as proposed. A fuller analysis of the 5-year ACS estimates and their implications for tribal FMAP rates appears below. A look-up table for 2012 FMAP rates, equivalent to the table for FYs 2010 and 2011 that appeared in the previous Federal Register Notice, appears at the end of this Notice. We also repeat at the end of this notice the lookup table for the FMAP rates applicable to FYs 2010 and 2011.

During the conference calls we held with Indian tribes to explain the proposed methodology we did receive questions on the data sources used to calculate the rate, i.e., the 2000 Decennial Census and the ACS, both produced by the U.S. Census Bureau. Specifically, we were asked whether the Census Bureau's definition of income includes tribal payments to members (it does) and whether the data source makes any adjustments to account for the high cost of living in Alaska (it does not). In addition, several callers asked us to provide them with the per capita income data for their Indian tribe, and the associated FMAP rate calculated using the proposed methodology. We provided this information in each case. One caller also asked for clarification regarding which components of the title IV–E Program are matched using the FMAP. We noted that FMAP is used to match assistance payments, which are primarily room and board costs for children in foster care and payments to families under the adoption assistance and kinship guardianship assistance programs. Other costs, particularly administrative and training costs, are matched at other statutorily defined match rates, 50 percent in the case of administrative costs, and 55 to 75 percent in the case of eligible training costs.

C. Analysis of American Community Survey 5-Year Estimates for 2005–2009

As noted above, the first 5-year ACS estimates were published by the Census Bureau on December 14, 2010. We have conducted an analysis of these data to determine FMAP rates under our proposed methodology for 162 Indian tribes and Alaska native communities that have, to date, either expressed interest in participating in title IV–E programs directly or have agreements or contracts with states under which they operate title IV–E programs. We considered as ''interested'' those Indian tribes that currently operate title IV–E programs through agreements with States as well as those that either applied for a title IV–E planning grant from the Children's Bureau, or that submitted a letter of intent to the Children's Bureau indicating they are considering the submission of a title IV–E plan. Such letters of intent were solicited by the Children's Bureau in a program instruction in December, 2008 (*http://www.acf.hhs.gov/programs/cb/laws_policies/policy/pi/2008/pi0806.htm*). Our analysis of ACS 5-year estimates in conjunction with the FMAP calculation methodology has revealed the following:

- All 11 Indian tribes with current title IV–E planning grants would receive the maximum FMAP under the proposed methodology using the newly released 5-year ACS data, as they did under the 2000 Decennial Census data.
- Of the 162 Indian tribes and Alaska native communities examined, 5-year ACS data was found to be available covering 151 of these Indian tribes and Alaska native communities. Of the 151, data for those on tribal lands identifying themselves as American Indian or Alaska Native (AI/AN) was available for 143. For the remaining 8 Indian tribes data is available for persons of all races residing in the tribal area, but not for the AI/AN population specifically.
- The data established that, using AI/AN data when it is available and data for all persons where it is not, a total of 128 of the 151 Indian tribes and Alaska native communities for which ACS data is available would receive the maximum FMAP of 83 percent.

• Twenty-four other Indian tribes that have expressed interest in the title IV–E program were determined to have higher per capita income and as a result the applicable Tribal FMAP would be lower than the maximum rate. These 24 include four tribes that would receive rates of between 80 and 83 percent, 10 that would receive rates between 70 and 79 percent, seven that would receive rates between 60 and 69 percent and two that would receive rates between 50 and 59 percent. In only three cases (two in Oklahoma and one in Michigan) was the calculated FMAP for the Indian tribe lower than that of the State within which the Indian tribe is located. In these three cases, the Indian tribe would receive the State's higher FMAP rate.

• Per capita income data is not available in the 5-year ACS data for 11 very small Indian tribes that have previously expressed an interest in the title IV–E programs, but which have not yet submitted a title IV–E plan or received a title IV–E plan development grant. Some of these Indian tribes currently receive title IV–E funds under a contract or cooperative agreement with the State(s) within which they are located. As described in section E below, we have modified our proposal to provide a method of calculating FMAP for Indian tribes for which no ACS data is available.

• FMAP rates calculated using the 5-year ACS data are largely consistent with those calculated using the older 2000 Decennial Census data. Of the 147 Indian tribes for which we examined FMAP rates and for which income estimates are available in both data sets, 121 result in the same FMAP rates using both data sources, while 6 would receive slightly higher rates using the more recent data and 20 would receive slightly lower rates. This fluctuation is to be expected and likely reflects differential economic development since 2000. For instance, the Indian tribe may have opened a casino or other industry since 2000 that has improved its per capita income relative to the nation as a whole. Conversely, the Indian tribe may have been disproportionately affected by the recession if local industry was particularly hard hit relative to other parts of the nation.

The 5-year ACS data are the most recent data available for almost all of the Indian tribes that we are aware are considering participating in title IV–E programs and therefore represents the best measure of the current per capita income for each Indian tribe. The consistency with earlier Census data provides further confidence that the ACS data is suitable for the purpose of calculating FMAP rates for Indian tribes.

D. Calculation of FMAP for Indian Tribes for Use Matching Program Claims for Fiscal Years 2010 and 2011

In the October 8 **Federal Register** Notice we proposed to adapt the standard FMAP formula used for States by substituting each participating Indian tribe's per capita income for that of the State, that is to use the formula 1–0.45((Indian Tribe's Per Capita Income)^2/(U.S. Per Capita Income)^2). We further proposed that minimum and maximum FMAP rates would apply to Indian tribes as they do to States, noting that we had no legal authority to waive these limits. We proposed to use 2000 Decennial Census data to calculate the FMAP rates for FYs 2010 and 2011, noting that it was the only data source we identified that included per capita income data for all the Indian tribes that had expressed interest in participating in the Title IV–E programs. We proposed to use data for those living on tribal lands who identified themselves solely as American Indian or Alaska Native when that data is available, and data for all persons in the tribal area when it is not. Finally, we had proposed that rather than use decimal places, tribal FMAP rates would be rounded up to the next highest whole number (up to a maximum of 83 percent).

Having received one supportive comment and no negative comments on each of the above components of our proposed methodology and no information about alternative data sources, we are finalizing this proposal with respect to calculating the FMAP rates for FYs 2010 and 2011.

The calculations using this methodology are to be the default method to be used to calculate FMAP for Indian tribes. However, as spelled out in the statute, if in any case the tribal FMAP rate calculated in this manner is lower than that of any State in which the Indian tribe is located, the Indian tribe would receive the higher State rate instead. In addition, also as directed by statute, HHS will consider using supplemental data identified by an Indian tribe, tribal organization or tribal consortium rather than 2000 Decennial Census data on per capita income if the Indian tribe, tribal organization or tribal consortium can demonstrate that the supplemental data better represents the per capita income of its service population. See section H below for further information on how HHS will evaluate the suitability of supplemental data.

E. Calculation of FMAP for Indian Tribes for Use Matching Program Claims for Fiscal Years 2012 and Beyond

For fiscal years 2012 and beyond we had proposed to use the same methodology for calculating the FMAP rate for participating Indian tribes, but had proposed to use more recent data on tribal per capita incomes—5-year estimates from the Census Bureau's American Community Survey, the first of which were to be released in December 2010. As was the case with the 2000 Decennial Census data, we had proposed to use data for those on tribal lands identifying themselves only as American Indian or Alaska Native where it is available, and data for all persons on tribal lands where it is not. The 5-year estimates for 2005–2009 were released as scheduled on December 14, 2010. These estimates will be updated annually by the Census Bureau by adding a new year's data and dropping the oldest year. As described above, the new data result in FMAP rates that are substantially similar to those produced by the earlier 2000 Decennial Census data they replace. Decennial census data for 2010 and beyond will not include the per capita income data needed for the FMAP formula.

We are finalizing this proposal with respect to calculating the FMAP rates for FY 2012 and subsequent FYs. The FY 2012 FMAP rates for Indian tribes will thus be calculated using the ACS 5-year estimates for 2005–2009 published on December 14, 2010. The tribal FMAP rates for each subsequent FY will utilize the most recent update of the ACS 5-year estimates available as of June 30 of the prior FY. As with the calculations for fiscal years 2010 and 2011, no Indian tribe will receive an FMAP rate less than that of any State in which the Indian tribe is located, and any supplemental data provided by the Indian tribe will be considered.

As noted above, once the first 5-year ACS estimates were published on December 14, 2010, it became clear that for a few small Indian tribes, even 5-year ACS estimates would not be sufficient to produce per capita income estimates for either the AI/AN alone population or for persons of all races living on tribal lands. In these cases, we will use as a third choice the per capita income of all individuals in the State who identify themselves as American Indian/Alaska Native as an estimate of the Indian tribe's per capita income. If the Indian tribe operates in multiple States, we will weigh the per capita income of the AI/AN population in each

State by the proportion of the Indian tribe's service population in the State. In establishing FMAP for Indian tribes for which ACS data is unavailable we will take care to consult with the Indian tribe regarding the availability of alternate data.

F. Calculation of FMAP for Consortia and Tribal Organizations Serving Multiple Tribes

In the October 8, 2010 **Federal Register** Notice we had proposed to calculate FMAP rates for consortia and tribal organizations serving multiple Indian tribes by weighting the per capita income data according to the proportional representation of each Indian tribe's service population relative to the total service population of the organization or consortium. Receiving no comments opposing the proposed methodology and having no alternatives suggested, this now becomes our established method for producing FMAP for organizations and consortia serving multiple Indian tribes. Again, consistent with NICWA's comments, we will consult with organizations and consortia as the issue comes up to ensure this method accurately represents the program's service population.

G. Procedures for Producing Annual Updates to Federal Medical Assistance Percentages for Indian Tribes

As noted above, we will use as our default source of per capita income data the 5-year estimates the American Community Survey. These data will be updated annually by the Census Bureau on a rolling basis by dropping the earliest of the 5 years and adding the latest. For fiscal year 2012 rates we will use ACS data for 2005–2009. For fiscal year 2013 we will update to using data for 2006–2010, and so forth. The formula for the calculation will remain as described above. In the third quarter of each fiscal year ACF regional office staff will communicate with each Indian tribe, tribal organization, or tribal consortium with an approved title IV–E plan their tribal FMAP rate for the upcoming fiscal year. Those States reporting title IV–E claims for Tribe-State agreement assistance payments will also be informed by the ACF regional office staff of the calculated FMAP rates for Indian tribes located in their State. Because most Indian tribes will be receiving the maximum FMAP rate, the calculation formula provides for rounding up to the next highest full percentage point and per capita incomes do not tend to change rapidly, it is likely that many programs will see little, if any, matching rate shifts from year to year. A link to a table similar to the ones at the end of this notice will be posted annually on ACF's Web site (*http://www.acf.hhs.gov*) displaying the per capita income thresholds for each FMAP rate for the fiscal year.

H. Consideration of Supplemental Data

As noted in our previous **Federal Register** Notice, before finalizing new FMAP rates for a year, HHS will consider any additional relevant data on its per capita income submitted by a Indian tribe, tribal organization or tribal consortium. In the absence of supplemental data, HHS will use the data and procedures described above to calculate the applicable FMAP for the grantee. Additional data submitted by Indian tribes, tribal organizations and tribal consortia will be evaluated by the Division of Mandatory Grants in the Office of Grants Management at ACF. Such data may be submitted to the attention of Joseph Lonergan, Director, Division of Mandatory Grant, ACF Office of Grants Management, at 202–401–6603 (phone); 202–401–5644 (fax); or email: *tribalfmap@hhs.gov.* Supplemental data may relate to matters such as the per capita income of the Indian tribe, tribal organization or consortium, the numbers and/or geographic locations of its service population, and/or defining the grantee's service population to include individuals other than those who identified themselves solely as American Indian to be considered for the purposes of calculating the applicable per capita income.

The suitability of supplemental data submissions from Indian Tribes, tribal organizations and tribal consortia will be evaluated based on criteria that include: Whether the Decennial Census or American Community Survey data that would otherwise be used is either missing or has a high margin of error; if the supplemental data reflects the same or similar definitions of income as do the national data, such as what types of income are included and excluded; if the data have been collected and tabulated in a reliable manner; and if the data are current or more recently updated than the data that would otherwise be used and therefore reflect more current economic conditions of the Indian tribe's service population.

Data to be considered for a given fiscal year's calculation should be submitted no later than 30 days before the beginning of the next fiscal year (September 1) in order to provide sufficient time for the Department to evaluate the suitability of the additional data. The tribal FMAP rate for the next fiscal year calculated from the ACS 5-year data will be in effect beginning on October 1 of that year unless and until a decision is made by the Department to revise it based on the supplemental data previously provided by the Indian tribe, tribal organization, or tribal consortium. Tribal leadership will be consulted prior to a final decision by the Department regarding the suitability of any supplemental data submitted. The Department will also work closely with tribal leaders before establishing a final FMAP for the upcoming fiscal year.

I. Application of Temporary Increases to Tribal Federal Medical Assistance Percentages

As proposed in our previous **Federal Register** Notice, to the extent permitted by law we will extend to Tribes any temporary adjustments to FMAP that apply to States. Temporary FMAP rates that applied to states in Fiscal Year 2010 and 2011 (i.e., those authorized by Public Law 111–5 and Public Law 111–226) will apply to Indian tribes. The applicability of any future FMAP adjustments to Indian tribes, tribal organizations, and tribal consortia will depend on the specific statutory language enacting such adjustments.

FOR FURTHER INFORMATION CONTACT: Laura Radel, Office of the Assistant Secretary for Planning and Evaluation, Room 404–E—Hubert H. Humphrey Building, 200 Independence Avenue, SW., Washington, DC 20201; 202–690–5938; *Laura.Radel@hhs.gov.*

(Catalog of Federal Domestic Assistance Program Nos. 93.658: Foster Care Title IV–E; 93.659: Adoption Assistance; 93.090: Guardianship Assistance)

Dated: May 20, 2011.

Kathleen Sebelius,

Secretary.

BILLING CODE 4150–05–P

Per Capita Income Levels
Matched to FY 2010/FY 2011 Federal Medical Assistance Percentage

To determine an Indian Tribe's Federal Medical Assistance Percentage (FMAP) for Fiscal Years 2010 and 2011, find the Indian Tribe's per capita income from the 2000 Decennial Census (American Indian/Alaska Native Alone population) in the list of FMAPs below.

1999 Per Capita Income from the 2000 Decennial Census Data: U.S. Estimate = $21,587
FMAP Formula: 1 - 0.45 x (Indian Tribe Per Capita Income²/U.S. Per Capita Income²)

1999 Tribal Per Capita Income Range from 2000 Decennial Census Data		Resulting FMAP	FMAP Including 6.2 Percentage Point Increase Authorized by ARRA through the First Quarter of FY 2011[1]
Income Greater Than or Equal to	Income Less Than or Equal to		
$0	$13,652	83%	89.2%
$13,653	$14,027	82%	88.2%
$14,028	$14,391	81%	87.2%
$14,392	$14,746	80%	86.2%
$14,747	$15,093	79%	85.2%
$15,094	$15,433	78%	84.2%
$15,434	$15,765	77%	83.2%
$15,766	$16,090	76%	82.2%
$16,091	$16,408	75%	81.2%
$16,409	$16,721	74%	80.2%
$16,722	$17,028	73%	79.2%
$17,029	$17,329	72%	78.2%
$17,330	$17,625	71%	77.2%
$17,626	$17,917	70%	76.2%
$17,918	$18,203	69%	75.2%
$18,204	$18,486	68%	74.2%
$18,487	$18,764	67%	73.2%
$18,765	$19,038	66%	72.2%
$19,039	$19,308	65%	71.2%
$19,309	$19,574	64%	70.2%
$19,575	$19,837	63%	69.2%
$19,838	$20,096	62%	68.2%
$20,097	$20,352	61%	67.2%
$20,353	$20,605	60%	66.2%
$20,606	$20,855	59%	65.2%
$20,856	$21,102	58%	64.2%
$21,103	$21,346	57%	63.2%
$21,347	$21,587	56%	62.2%
$21,588	$21,825	55%	61.2%
$21,826	$22,061	54%	60.2%
$22,062	$22,295	53%	59.2%
$22,296	$22,526	52%	58.2%
$22,527	$22,754	51%	57.2%
$22,755		50%	56.2%

[1] The ARRA FMAP enhancement has been extended for two additional quarters (i.e. January – June 2011). To calculate the Tribal FMAP rate for these periods, use the rate provided in the "Resulting FMAP" column and add 3.2 percentage points for the quarter ending March 31, 2011 and 1.2 percentage points for the quarter ending June 30, 2011.

Per Capita Income Levels
Matched to FY 2012 Federal Medical Assistance Percentage

To determine an Indian tribe's Federal Medical Assistance Percentage (FMAP) for Fiscal Year 2012, find the Indian tribe's per capita income, using American Community Survey 5-year estimates for the American Indian/Alaska Native "alone" population for 2005-2009, in the list of FMAPs below.

U.S. Per Capita Income (2005-2009) $27,401

FMAP Formula: 1 - 0.45 x (Indian Tribe Per Capita Income²/U.S. Per Capita Income²)

Tribal Per Capita Income Range from American Community Survey Estimates for FY 2005-2009		Resulting FMAP
Income Greater Than or Equal to	Income Less Than or Equal to	
$0	$17,329	83%
$17,330	$17,804	82%
$17,805	$18,267	81%
$18,268	$18,718	80%
$18,719	$19,159	79%
$19,160	$19,589	78%
$19,590	$20,010	77%
$20,011	$20,423	76%
$20,424	$20,828	75%
$20,829	$21,224	74%
$21,225	$21,614	73%
$21,615	$21,996	72%
$21,997	$22,372	71%
$22,373	$22,742	70%
$22,743	$23,106	69%
$23,107	$23,464	68%
$23,465	$23,817	67%
$23,818	$24,165	66%
$24,166	$24,508	65%
$24,509	$24,846	64%
$24,847	$25,179	63%
$25,180	$25,509	62%
$25,510	$25,834	61%
$25,835	$26,155	60%
$26,156	$26,472	59%
$26,473	$26,785	58%
$26,786	$27,095	57%
$27,096	$27,401	56%
$27,402	$27,703	55%
$27,704	$28,003	54%
$28,004	$28,299	53%
$28,300	$28,593	52%
$28,594	$28,883	51%
$28,884		50%

[FR Doc. 2011–19358 Filed 7–29–11; 8:45 am]
BILLING CODE 4150–05–C

DEPARTMENT OF HEALTH AND HUMAN SERVICES

National Committee on Vital and Health Statistics: Meeting

Pursuant to the Federal Advisory Committee Act, the Department of Health and Human Services (HHS) announces the following advisory committee meeting.

Name: National Committee on Vital and Health Statistics (NCVHS), Full Committee Meeting.

Time and Date: August 26, 2011: 3 p.m.–5 p.m., E.D.T.

Place: Teleconference. Dial-In Number: 1–877–939–9305, participant code is 4431134.

Status: Open.

Purpose: This teleconference is being held to discuss a letter to the HHS Secretary regarding the President's Council of Advisors on Science and Technology (PCAST) Report on Health Information Technology and to approve the final draft.

FOR FURTHER INFORMATION CONTACT: Substantive program information as well as summaries of meetings and a roster of committee members may be obtained from Marjorie S. Greenberg, Executive Secretary, NCVHS, National Center for Health Statistics, Centers for Disease Control and Prevention, 3311 Toledo Road, Room 2402, Hyattsville, Maryland 20782, telephone (301) 458–4245. Information also is available on the NCVHS home page of the HHS Web

site: *http://www.ncvhs.hhs.gov/,* where further information including an agenda will be posted when available.

Should you require reasonable accommodation, please contact the CDC Office of Equal Employment Opportunity on (301) 458–4EEO (4336) as soon as possible.

Dated: July 25, 2011.

James Scanlon,

Deputy Assistant Secretary for Science and Data Policy, Office of the Assistant Secretary for Planning and Evaluation.

[FR Doc. 2011–19359 Filed 7–29–11; 8:45 am]

BILLING CODE 4151–05–P

DEPARTMENT OF HEALTH AND HUMAN SERVICES

Food and Drug Administration

[Docket No. FDA–2011–N–0548]

Animal Drug User Fee Rates and Payment Procedures for Fiscal Year 2012

AGENCY: Food and Drug Administration, HHS.

ACTION: Notice.

SUMMARY: The Food and Drug Administration (FDA) is announcing the rates and payment procedures for fiscal year (FY) 2012 animal drug user fees. The Federal Food, Drug, and Cosmetic Act (the FD&C Act), as amended by the Animal Drug User Fee Act of 2003 (ADUFA) and the Animal Drug User Fee Amendments of 2008 (ADUFA II), authorizes FDA to collect user fees for certain animal drug applications and supplements, on certain animal drug products, on certain establishments where such products are made, and on certain sponsors of such animal drug applications and/or investigational animal drug submissions. This notice establishes the fee rates for FY 2012.

FOR FURTHER INFORMATION CONTACT: Visit FDA's Web site at *http://www.fda.gov/ForIndustry/UserFees/AnimalDrugUserFeeActADUFA/default.htm* or contact Lisa Kable, Center for Veterinary Medicine (HFV–10), Food and Drug Administration, 7529 Standish Pl., Rockville, MD 20855, 240–276–9718. For general questions, you may also e-mail the Center for Veterinary Medicine (CVM) at: *cvmadufa@fda.hhs.gov.*

SUPPLEMENTARY INFORMATION:

I. Background

Section 740 of the FD&C Act (21 U.S.C. 379j–12) establishes four different kinds of user fees: (1) Fees for certain types of animal drug applications and supplements, (2) annual fees for certain animal drug products, (3) annual fees for certain establishments where such products are made, and (4) annual fees for certain sponsors of animal drug applications and/or investigational animal drug submissions (21 U.S.C. 379j–12(a)). When certain conditions are met, FDA will waive or reduce fees (21 U.S.C. 379j–12(d)).

For FY 2009 through FY 2013, the FD&C Act establishes aggregate yearly base revenue amounts for each of these fee categories. Base revenue amounts established for years after FY 2009 are subject to adjustment for workload. Fees for applications, establishments, products, and sponsors are to be established each year by FDA so that the revenue for each fee category will approximate the level established in the statute, after the level has been adjusted for workload.

For FY 2012, the animal drug user fee rates are: $372,100 for an animal drug application; $186,050 for a supplemental animal drug application for which safety or effectiveness data is required and for an animal drug application subject to the criteria set forth in section 512(d)(4) of the FD&C Act (21 U.S.C. 360b(d)(4)); $7,935 for an annual product fee; $93,050 for an annual establishment fee; and $67,200 for an annual sponsor fee. FDA will issue invoices for FY 2012 product, establishment, and sponsor fees by December 31, 2011, and these invoices will be due and payable within 30 days of issuance of the invoice. The application fee rates are effective for applications submitted on or after October 1, 2011, and will remain in effect through September 30, 2012. Applications will not be accepted for review until FDA has received full payment of application fees and any other animal drug user fees owed.

II. Revenue Amount for FY 2012

A. Statutory Fee Revenue Amounts

ADUFA II (Pub. L. 110–316 signed by the President on August 14, 2008) specifies that the aggregate revenue amount for FY 2012 for each of the four animal drug user fee categories is $5,442,000 before any adjustment for workload is made. (See 21 U.S.C. 379j–12(b)(1) through (b)(4).)

B. Inflation Adjustment to Fee Revenue Amount

The amounts established in ADUFA II for each year for FY 2009 through FY 2013 include an inflation adjustment; so, no further inflation adjustment is required.

C. Workload Adjustment to Inflation Adjusted Fee Revenue Amount

For each FY beginning in FY 2010, ADUFA provides that fee revenue amounts shall be further adjusted to reflect changes in review workload (21 U.S.C. 379j–12(c)(1)).

FDA calculated the average number of each of the five types of applications and submissions specified in the workload adjustment provision (animal drug applications, supplemental animal drug applications for which data with respect to safety or efficacy are required, manufacturing supplemental animal drug applications, investigational animal drug study submissions, and investigational animal drug protocol submissions) received over the 5-year period that ended on September 30, 2002 (the base years), and the average number of each of these types of applications and submissions over the most recent 5-year period that ended on June 30, 2011.

The results of these calculations are presented in the first two columns of table 1 of this document. Column 3 reflects the percent change in workload over the two 5-year periods. Column 4 shows the weighting factor for each type of application, reflecting how much of the total FDA animal drug review workload was accounted for by each type of application or submission in the table during the most recent 5 years. Column 5 of table 1 of this document is the weighted percent change in each category of workload, and was derived by multiplying the weighting factor in each line in column 4 by the percent change from the base years in column 3. At the bottom right of the table the sum of the values in column 5 is added, reflecting a total change in workload of negative 31 percent for FY 2012. This is the workload adjuster for FY 2012.

TABLE 1—WORKLOAD ADJUSTER CALCULATION

[Numbers may not add due to rounding]

Application type	Column 1 5-year avg. (base years)	Column 2 Latest 5-year avg.	Column 3 Percent change	Column 4 Weighting factor	Column 5 Weighted percent change
New Animal Drug Applications (NADA's)	28.8	13.0	−55	0.0296	−2
Supplemental NADA's with Safety or Efficacy Data	23.4	11.2	−52	0.0234	−1
Manufacturing Supplements	366.6	427.6	17	0.1385	2
Investigational Study Submissions	336.6	215.8	−36	0.6023	−22
Investigational Protocol Submissions	292.4	173.8	−41	0.2063	−8
FY 2012 Workload Adjuster					−31

ADUFA specifies that the workload adjuster may not result in fees that are less than the fee revenue amount in the statute (21 U.S.C. 379j–12(c)(1)(B)). Because applying the FY 2012 workload adjuster would result in fees less than the statutory amount, the workload adjustment will not be applied in FY 2012. As a result, the statutory revenue target amount for each of the four categories of fees remains at $5,442,000 with the new total revenue target for fees in FY 2012 being $21,768,000.

III. Adjustment for Excess Collections in Previous Years

ADUFA II amended the annual offset provision of ADUFA I to require one offset when FY 2013 fees are set in August of 2012, if aggregate collections from FY 2009 through 2011 plus the amount of fees estimated to be collected for FY 2012 exceed aggregate appropriations over the same period (21 U.S.C. 379j–12(g)(4), as amended by ADUFA II). Therefore FDA is not offsetting for excess collections at this time.

IV. Application Fee Calculations for FY 2012

The terms ''animal drug application'' and ''supplemental animal drug application'' are defined in section 739 of the FD&C Act (21 U.S.C. 379j–11(1) and (2)).

A. Application Fee Revenues and Numbers of Fee-Paying Applications

The application fee must be paid for any animal drug application or supplemental animal drug application that is subject to fees under ADUFA and that is submitted on or after September 1, 2003. The application fees are to be set so that they will generate $5,442,000 in fee revenue for FY 2012. This is the amount set out in the statute and no adjustments are required for FY 2012. The fee for a supplemental animal drug application for which safety or effectiveness data are required and for an animal drug application subject to criteria set forth in section 512(d)(4) of the FD&C Act is to be set at 50 percent of the animal drug application fee. (See 21 U.S.C. 379j–12(a)(1)(A)(ii), as amended by ADUFA II.)

To set animal drug application fees and supplemental animal drug application fees to realize $5,442,000, FDA must first make some assumptions about the number of fee-paying applications and supplements the agency will receive in FY 2012.

The agency knows the number of applications that have been submitted in previous years. That number fluctuates significantly from year to year. In estimating the fee revenue to be generated by animal drug application fees in FY 2012, FDA is assuming that the number of applications that will pay fees in FY 2012 will equal the average number of submissions over the four most recent completed years (FY 2007–FY 2010). This may not fully account for possible year to year fluctuations in numbers of fee-paying applications, but FDA believes that this is a reasonable approach after 8 years of experience with this program.

Over the 4 most recent completed years, the average number of animal drug applications that would have been subject to the full fee was 8.25. Over this same period, the average number of supplemental applications and applications subject to the criteria set forth in section 512(d)(4) of the FD&C Act that would have been subject to half of the full fee was 12.75.

Thus, for FY 2012, FDA estimates receipt of 8.25 fee paying original applications and 12.75 fee-paying supplemental animal drug applications and applications subject to the criteria set forth is section 512(d)(4) of the FD&C Act which pay half of the full fee.

B. Fee Rates for FY 2012

FDA must set the fee rates for FY 2012 so that the estimated 8.25 applications that pay the full fee and the estimated 12.75 supplements and applications subject to the criteria set forth in section 512(d)(4) of the FD&C Act that pay half of the full fee will generate a total of $5,442,000. To generate this amount, the fee for an animal drug application, rounded to the nearest hundred dollars, will have to be $372,100, and the fee for a supplemental animal drug application for which safety or effectiveness data are required and for applications subject to the criteria set forth in section 512(d)(4) of the FD&C Act will have to be $186,050.

V. Product Fee Calculations for FY 2012

A. Product Fee Revenues and Numbers of Fee-Paying Products

The animal drug product fee (also referred to as the product fee) must be paid annually by the person named as the applicant in a new animal drug application or supplemental new animal drug application for an animal drug product submitted for listing under section 510 of the FD&C Act (21 U.S.C. 360), and who had an animal drug application or supplemental animal drug application pending at FDA after September 1, 2003. (See 21 U.S.C. 379j–12(a)(2).) The term ''animal drug product'' is defined in 21 U.S.C. 379j–11(3). The product fees are to be set so that they will generate $5,442,000 in fee revenue for FY 2012. This is the amount set out in the statute and no adjustments are required for FY 2012.

To set animal drug product fees to realize $5,442,000, FDA must make some assumptions about the number of products for which these fees will be paid in FY 2012. FDA developed data on all animal drug products that have been submitted for listing under section 510 of the FD&C Act, and matched this to the list of all persons who had an animal drug application or supplement pending after September 1, 2003. As of July 2011, FDA estimates that there are a total of 762 products submitted for listing by persons who had an animal drug application or supplemental animal drug application pending after September 1, 2003. Based on this, FDA estimates that a total of 762 products will be subject to this fee in FY 2012.

In estimating the fee revenue to be generated by animal drug product fees in FY 2012, FDA is again assuming that 10 percent of the products invoiced, or about 76, will not pay fees in FY 2012 due to fee waivers and reductions. Based on experience with other user fee programs and the first 8 years of ADUFA, FDA believes that this is a reasonable basis for estimating the number of fee-paying products in FY 2012.

Accordingly, the agency estimates that a total of 686 (762 minus 76) products will be subject to product fees in FY 2012.

B. Product Fee Rates for FY 2012

FDA must set the fee rates for FY 2012 so that the estimated 686 products that pay fees will generate a total of $5,442,000. To generate this amount will require the fee for an animal drug product, rounded to the nearest 5 dollars, to be $7,935.

VI. Establishment Fee Calculations for FY 2012

A. Establishment Fee Revenues and Numbers of Fee-Paying Establishments

The animal drug establishment fee (also referred to as the establishment fee) must be paid annually by the person who: (1) Owns or operates, directly or through an affiliate, an animal drug establishment; (2) is named as the applicant in an animal drug application or supplemental animal drug application for an animal drug product submitted for listing under section 510 of the FD&C Act; (3) had an animal drug application or supplemental animal drug application pending at FDA after September 1, 2003; and (4) whose establishment engaged in the manufacture of the animal drug product during the fiscal year. (See 21 U.S.C. 379j–12(a)(3).) An establishment subject to animal drug establishment fees is assessed only one such fee per fiscal year. (See 21 U.S.C. 379j–12(a)(3).) The term ''animal drug establishment'' is defined in 21 U.S.C. 379j–11(4). The establishment fees are to be set so that they will generate $5,442,000 in fee revenue for FY 2012. This is the amount set out in the statute and no adjustments are required for FY 2012.

To set animal drug establishment fees to realize $5,442,000, FDA must make some assumptions about the number of establishments for which these fees will be paid in FY 2012. FDA developed data on all animal drug establishments and matched this to the list of all persons who had an animal drug application or supplement pending after September 1, 2003. As of July 2011, FDA estimates that there are a total of 65 establishments owned or operated by persons who had an animal drug application or supplemental animal drug application pending after September 1, 2003. Based on this, FDA believes that 65 establishments will be subject to this fee in FY 2012.

In estimating the fee revenue to be generated by animal drug establishment fees in FY 2012, FDA is assuming that 10 percent of the establishments invoiced, or 6.5, will not pay fees in FY 2012 due to fee waivers and reductions. Based on experience with the first 8 years of ADUFA, FDA believes that this is a reasonable basis for estimating the number of fee-paying establishments in FY 2012.

Accordingly, the agency estimates that a total of 58.5 establishments (65 minus 6.5) will be subject to establishment fees in FY 2012.

B. Establishment Fee Rates for FY 2012

FDA must set the fee rates for FY 2012 so that the estimated 58.5 establishments that pay fees will generate a total of $5,442,000. To generate this amount will require the fee for an animal drug establishment, rounded to the nearest 50 dollars, to be $93,050.

VII. Sponsor Fee Calculations for FY 2012

A. Sponsor Fee Revenues and Numbers of Fee-Paying Sponsors

The animal drug sponsor fee (also referred to as the sponsor fee) must be paid annually by each person who: (1) Is named as the applicant in an animal drug application, except for an approved application for which all subject products have been removed from listing under section 510 of the FD&C Act or has submitted an investigational animal drug submission that has not been terminated or otherwise rendered inactive; and (2) had an animal drug application, supplemental animal drug application, or investigational animal drug submission pending at FDA after September 1, 2003. (See 21 U.S.C. 379j–11(6) and 379j–12(a)(4).) An animal drug sponsor is subject to only one such fee each fiscal year. (See 21 U.S.C. 379j–12(a)(4).) The sponsor fees are to be set so that they will generate $5,442,000 in fee revenue for FY 2012. This is the amount set out in the statute, and no adjustments are required for FY 2012.

To set animal drug sponsor fees to realize $5,442,000, FDA must make some assumptions about the number of sponsors who will pay these fees in FY 2012. Based on the number of firms that would have met this definition in each of the past 8 years, FDA estimates that a total of 172 sponsors will meet this definition in FY 2012.

Careful review indicates that about one third or 33 percent of all of these sponsors will qualify for minor use/minor species waiver or reduction (21 U.S.C. 379j–12(d)(1)(C)). Based on the agency's experience to date with sponsor fees, FDA's current best estimate is that an additional 20 percent will qualify for other waivers or reductions, for a total of 53 percent of the sponsors invoiced, or 91, who will not pay fees in FY 2012 due to fee waivers and reductions. FDA believes that this is a reasonable basis for estimating the number of fee-paying sponsors in FY 2012.

Accordingly, the agency estimates that a total of 81 sponsors (172 minus 91) will be subject to and pay sponsor fees in FY 2012.

B. Sponsor Fee Rates for FY 2012

FDA must set the fee rates for FY 2012 so that the estimated 81 sponsors that pay fees will generate a total of $5,442,000. To generate this amount will require the fee for an animal drug sponsor, rounded to the nearest 50 dollars, to be $67,200.

VIII. Fee Schedule for FY 2012

The fee rates for FY 2012 are summarized in table 2 of this document.

TABLE 2—FY 2012 FEE RATES

Animal drug user fee category	Fee rate for FY 2012
Animal Drug Application Fees	$372,100
Animal Drug Application.	
Supplemental Animal Drug Application for which Safety or Effectiveness Data are Required or Animal Drug Application Subject to the Criteria Set Forth in Section 512(d)(4) of the FD&C Act	186,050
Animal Drug Product Fee	7,935

TABLE 2—FY 2012 FEE RATES—Continued

Animal drug user fee category	Fee rate for FY 2012
Animal Drug Establishment Fee [1]	93,050
Animal Drug Sponsor Fee [2]	67,200

[1] An animal drug establishment is subject to only one such fee each fiscal year.
[2] An animal drug sponsor is subject to only one such fee each fiscal year.

IX. Procedures for Paying the FY 2012 Fees

A. Application Fees and Payment Instructions

The appropriate application fee established in the new fee schedule must be paid for an animal drug application or supplement subject to fees under ADUFA that is submitted after September 30, 2011. Payment must be made in U.S. currency by check, bank draft, or U.S. postal money order payable to the order of the Food and Drug Administration, by wire transfer, or electronically using Pay.gov. (The Pay.gov payment option is available to you after you submit a cover sheet. Click the ''Pay Now'' button.) On your check, bank draft, or U.S. postal money order, please write your application's unique Payment Identification Number (PIN), beginning with the letters AD, from the upper right-hand corner of your completed Animal Drug User Fee Cover Sheet. Also write the FDA post office box number (P.O. Box 953877) on the enclosed check, bank draft, or money order. Your payment and a copy of the completed Animal Drug User Fee Cover Sheet can be mailed to: Food and Drug Administration, P.O. Box 953877, St. Louis, MO 63195–3877.

If payment is made by wire transfer, send payment to: U.S. Department of Treasury, TREAS NYC, 33 Liberty St., New York, NY 10045, FDA Deposit Account Number: 75060099, U.S. Department of Treasury routing/transit number: 021030004, SWIFT Number: FRNYUS33. You are responsible for any administrative costs associated with the processing of a wire transfer. Contact your bank or financial institution regarding additional fees.

If you prefer to send a check by a courier such as Federal Express (FEDEX) or United Parcel Service (UPS), the courier may deliver the check and printed copy of the cover sheet to: U.S. Bank, Attn: Government Lockbox 953877, 1005 Convention Plaza, St. Louis, MO 63101. (**Note:** This address is for courier delivery only. If you have any questions concerning courier delivery contact the U.S. Bank at 314–418–4821. This telephone number is only for questions about courier delivery.)

The tax identification number of the Food and Drug Administration is 530196965. (**Note:** In no case should the payment for the fee be submitted to FDA with the application.)

It is helpful if the fee arrives at the bank at least a day or two before the application arrives at FDA's CVM. FDA records the official application receipt date as the later of the following: The date the application was received by FDA's CVM, or the date U.S. Bank notifies FDA that your payment in the full amount has been received, or when the U.S. Treasury notifies FDA of receipt of an electronic or wire transfer payment. U.S. Bank and the U.S. Treasury are required to notify FDA within one working day, using the PIN described previously.

B. Application Cover Sheet Procedures

Step One—Create a user account and password. Log on to the ADUFA Web site at *http://www.fda.gov/ForIndustry/UserFees/AnimalDrugUserFeeAct ADUFA/default.htm* and under Tools and Resources click ''The Animal Drug User Fee Cover Sheet'' and then click ''Create ADUFA User Fee Cover Sheet.'' For security reasons, each firm submitting an application will be assigned an organization identification number, and each user will also be required to set up a user account and password the first time you use this site. Online instructions will walk you through this process.

Step Two—Create an Animal Drug User Fee Cover Sheet, transmit it to FDA, and print a copy. After logging into your account with your user name and password, complete the steps required to create an Animal Drug User Fee Cover Sheet. One cover sheet is needed for each animal drug application or supplement. Once you are satisfied that the data on the cover sheet is accurate and you have finalized the cover sheet, you will be able to transmit it electronically to FDA and you will be able to print a copy of your cover sheet showing your unique PIN.

Step Three—Send the payment for your application as described in section IX.A of this document.

Step Four—Please submit your application and a copy of the completed Animal Drug User Fee Cover Sheet to the following address: Food and Drug Administration, Center for Veterinary Medicine, Document Control Unit (HFV–199), 7500 Standish Pl., Rockville, MD 20855.

C. Product, Establishment, and Sponsor Fees

By December 31, 2011, FDA will issue invoices and payment instructions for product, establishment, and sponsor fees for FY 2012 using this Fee Schedule. Payment will be due and payable within 30 days of issuance of the invoice. FDA will issue invoices in November 2012 for any products, establishments, and sponsors subject to fees for FY 2012 that qualify for fees after the December 2011 billing.

Dated: July 26, 2011.

Leslie Kux,

Acting Assistant Commissioner for Policy.

[FR Doc. 2011–19336 Filed 7–29–11; 8:45 am]

BILLING CODE 4160–01–P

DEPARTMENT OF HEALTH AND HUMAN SERVICES

Food and Drug Administration

[Docket No. FDA–2011–N–0547]

Animal Generic Drug User Fee Rates and Payment Procedures for Fiscal Year 2012

AGENCY: Food and Drug Administration, HHS.

ACTION: Notice.

SUMMARY: The Food and Drug Administration (FDA) is announcing the rates and payment procedures for fiscal year (FY) 2012 generic new animal drug user fees. The Federal Food, Drug, and Cosmetic Act (the FD&C Act), as amended by the Animal Generic Drug User Fee Act of 2008 (AGDUFA), authorizes FDA to collect user fees for certain abbreviated applications for generic new animal drugs, on certain generic new animal drug products, and on certain sponsors of such abbreviated applications for generic new animal drugs and/or investigational

submissions for generic new animal drugs. This notice establishes the fee rates for FY 2012.

FOR FURTHER INFORMATION CONTACT: Visit FDA's Web site at *http://www.fda.gov/ForIndustry/UserFees/AnimalGenericDrugUserFeeActAGDUFA/default.htm* or contact Lisa Kable, Center for Veterinary Medicine (HFV–10), Food and Drug Administration, 7529 Standish Pl., Rockville, MD 20855, 240–276–9718. For general questions, you may also email the Center for Veterinary Medicine (CVM) at: *cvmagdufa@fda.hhs.gov.*

SUPPLEMENTARY INFORMATION:

I. Background

Section 741 of the FD&C Act (21 U.S.C. 379j–21) establishes three different kinds of user fees: (1) Fees for certain types of abbreviated applications for generic new animal drugs, (2) annual fees for certain generic new animal drug products, and (3) annual fees for certain sponsors of abbreviated applications for generic new animal drugs and/or investigational submissions for generic new animal drugs (21 U.S.C. 379j–21(a)). When certain conditions are met, FDA will waive or reduce fees for generic new animal drugs intended solely to provide for a minor use or minor species indication (21 U.S.C. 379j–21(d)).

For FY 2009 through FY 2013, the FD&C Act establishes aggregate yearly base revenue amounts for each of these fee categories. Base revenue amounts established for years after FY 2009 may be adjusted for workload. Fees for applications, products, and sponsors are to be established each year by FDA so that the revenue for each fee category will approximate the level established in the statute, after the level has been adjusted for workload.

For FY 2012, the generic new animal drug user fee rates are: $124,900 for each abbreviated application for a generic new animal drug; $6,200 for each generic new animal drug product; $54,350 for each generic new animal drug sponsor paying 100 percent of the sponsor fee; $40,763 for each generic new animal drug sponsor paying 75 percent of the sponsor fee; and $27,175 for each generic new animal drug sponsor paying 50 percent of the sponsor fee. FDA will issue invoices for FY 2012 product and sponsor fees by December 31, 2011. These fees will be due and payable within 30 days of the issuance of the invoices. The application fee rates are effective for all abbreviated applications for a generic new animal drug submitted on or after October 1, 2011, and will remain in effect through September 30, 2012. Applications will not be accepted for review until FDA has received full payment of related application fees and any other fees owed under the Animal Generic Drug User Fee program.

II. Revenue Amount for FY 2012

A. Statutory Fee Revenue Amounts

AGDUFA (Title II of Pub. L. 110–316 signed by the President on August 14, 2008) specifies that the aggregate revenue amount for FY 2012 for abbreviated application fees is $1,712,000 and each of the other two generic new animal drug user fee categories, annual product fees and annual sponsor fees, is $1,997,000 each, before any adjustment for workload is made (see 21 U.S.C. 379j–21(b)).

B. Inflation Adjustment to Fee Revenue Amount

The amounts established in AGDUFA for each year for FY 2009 through FY 2013 include an inflation adjustment; so, no inflation adjustment is required.

C. Workload Adjustment to Inflation Adjusted Fee Revenue Amount

For each FY beginning after FY 2009, AGDUFA provides that statutory fee revenue amounts shall be further adjusted to reflect changes in review workload (21 U.S.C. 379j–21(c)(1)).

FDA calculated the average number of each of the four types of applications and submissions specified in the workload adjustment provision (abbreviated applications for generic new animal drugs, manufacturing supplemental abbreviated applications for generic new animal drugs, investigational generic new animal drug study submissions, and investigational generic new animal drug protocol submissions) received over the 5-year period ended on September 30, 2008 (the base years), and the average number of each of these types of applications and submissions over the most recent 5-year period that ended on June 30, 2011.

The results of these calculations are presented in the first two columns of table 1 of this document. Column 3 reflects the percent change in workload over the two 5-year periods. Column 4 shows the weighting factor for each type of application, reflecting how much of the total FDA generic new animal drug review workload was accounted for by each type of application or submission in the table during the most recent 5 years. Column 5 of table 1 is the weighted percent change in each category of workload and was derived by multiplying the weighting factor in each line in column 4 by the percent change from the base years in column 3. At the bottom right of table 1, the sum of the values in column 5 is calculated, reflecting a total change in workload of negative 25.7 percent for FY 2012. This is the workload adjuster for FY 2012.

TABLE 1—WORKLOAD ADJUSTER CALCULATION

Application type	Column 1 5-Year average (base years)	Column 2 Latest 5-year average	Column 3 Percent change	Column 4 Weighting factor	Column 5 Weighted percent change
Abbreviated New Animal Drug Applications (ANADAs)	44.2	25.4	−43	50%	−21.3
Manufacturing Supplements ANADAs	114.6	118.4	3	22%	0.7
Generic Investigational Study Submissions	17.4	17.0	−2	10%	−0.2
Generic Investigational Protocol Submissions	21.6	15.6	−28	17%	−4.8
FY 2012 AGDUFA Workload Adjuster					−25.7

AGDUFA specifies that the workload adjuster may not result in fees for a fiscal year that are less than the statutory revenue amount (21 U.S.C. 379j–21(c)(1)(B)) for that fiscal year. Because applying the workload adjuster for FY 2012 would result in fees less than the statutory amount, the workload adjustment will not be applied in FY 2012. As a result, the statutory revenue amount for each category of fees for FY 2012 ($1,712,000 for application fees and $1,997,000 for both product and sponsor fees) becomes the revenue target for the fees in FY 2012, for a total

fee revenue target in FY 2012 of $5,706,000 for fees from all three categories.

III. Abbreviated Application Fee Calculations for FY 2012

The term ''abbreviated application for a generic new animal drug'' is defined in 21 U.S.C. 379j–21(k)(1).

A. Application Fee Revenues and Numbers of Fee-Paying Applications

The application fee must be paid for abbreviated applications for a generic new animal drug that is subject to fees under AGDUFA and that is submitted on or after July 1, 2008. The application fees are to be set so that they will generate $1,712,000 in fee revenue for FY 2012. This is the amount set out in the statute.

To set fees for abbreviated applications for generic new animal drugs to realize $1,712,000, FDA must first make some assumptions about the number of fee-paying abbreviated applications it will receive during FY 2012.

The Agency knows the number of applications that have been submitted in previous years. That number fluctuates significantly from year to year. FDA is making estimates and applying different assumptions for two types of submissions: Original submissions of abbreviated applications for generic new animal drugs and ''reactivated'' submissions of abbreviated applications for generic new animal drugs. Any original submissions of abbreviated applications for generic new animal drugs that were received by FDA before July 1, 2008, were not assessed fees (21 U.S.C. 379j–21(a)(1)(A)). Some of these non-fee-paying submissions were later resubmitted after July 1 because the initial submission was not approved by FDA (i.e., FDA marked the submission as incomplete and requested additional nonadministrative information) or because the original submission was withdrawn by the sponsor. Because these abbreviated applications for generic new animal drugs are resubmitted after July 1, 2008, they are assessed fees. In this notice, FDA refers to these resubmitted applications as ''reactivated'' applications.

Regarding original submissions of abbreviated applications for generic new animal drugs, FDA is assuming that the number of applications that will pay fees in FY 2012 will equal 30 percent less than the average number of submissions over the 5 most recent completed years (2006–2010). This 30-percent reduction is made because of the anticipated impact of fees on the number of submissions. The average number of original submissions of abbreviated applications for generic new animal drugs over the 5 most recent completed years is 14.4. Applying a 30-percent reduction to the 14.4 average, the estimate for original submissions of abbreviated applications for generic new animal drugs for FY 2012 is 10.1. (If the number of original submissions of abbreviated applications for generic new animal drugs does not increase over the next year, a higher percent reduction will have to be applied next year when fees are set for FY 2013.)

Regarding reactivated submissions of abbreviated applications for generic new animal drugs, FDA is applying a 75-percent reduction. This is based on the fact that there were a limited number of original submissions of abbreviated applications for generic new animal drugs received by FDA before July 1, 2008, which were not assessed fees. For these original submissions that were not approved before July 1, 2008, resubmission to FDA would trigger an application fee (21 U.S.C. 379j–21(a)(1)(A)). Once these initial original submissions of abbreviated applications for generic new animal drugs received by FDA before July 1, 2008, have either been withdrawn or resubmitted, ''reactivation submissions'' will cease completely. This reduction is consistent with estimates made when this user fee program was in the development process. The average number of receipts for reactivated submissions of abbreviated applications for generic new animal drugs is 14.5 per year, which is the average of the 5 most recent completed years. Applying a 75-percent reduction to the 14.5 average, the estimate for reactivated submissions of abbreviated applications for generic new animal drugs for FY 2012 is 3.6. These reductions may not fully account for possible year to year fluctuations in numbers of fee-paying applications, but FDA believes that this is a reasonable approach after years of experience with other user fee programs.

Based on the previous assumptions, FDA is estimating that it will receive a total of 13.7 fee-paying generic new animal drug applications in FY 2012 (10.1 original applications and 3.6 reactivations).

B. Fee Rates for FY 2012

FDA must set the fee rates for FY 2012 so that the estimated 13.7 abbreviated applications that pay the fee will generate a total of $1,712,000. To generate this amount, the fee for a generic new animal drug application, rounded to the nearest hundred dollars, will have to be $124,900.

IV. Generic New Animal Drug Product Fee Calculations for FY 2012

A. Product Fee Revenues and Numbers of Fee-Paying Products

The generic new animal drug product fee (also referred to as the product fee) must be paid annually by the person named as the applicant in an abbreviated new animal drug application or supplemental abbreviated application for generic new animal drugs for an animal drug product submitted for listing under section 510 of the FD&C Act (21 U.S.C. 360), and who had an abbreviated application for a generic new animal drug or supplemental abbreviated application for a generic new animal drug pending at FDA after September 1, 2008 (see 21 U.S.C. 379j–21(a)(2)). The term ''generic new animal drug product'' means each specific strength or potency of a particular active ingredient or ingredients in final dosage form marketed by a particular manufacturer or distributor, which is uniquely identified by the labeler code and product code portions of the national drug code, and for which an abbreviated application for a generic new animal drug or supplemental abbreviated application for a generic new animal drug has been approved (21 U.S.C. 379j–21(k)(6)). The product fees are to be set so that they will generate $1,997,000 in fee revenue for FY 2012. This is the amount set out in the statute and no further adjustments are required for FY 2012.

To set generic new animal drug product fees to realize $1,997,000, FDA must make some assumptions about the number of products for which these fees will be paid in FY 2012. FDA gathered data on all generic new animal drug products that have been submitted for listing under section 510 of the FD&C Act and matched this to the list of all persons who FDA estimated would have an abbreviated new animal drug application or supplemental abbreviated application pending after September 1, 2008. FDA estimates a total of 358 products submitted for listing by persons who had an abbreviated application for a generic new animal drug or supplemental abbreviated application for a generic new animal drug pending after September 1, 2008. Based on this, FDA believes that a total of 358 products will be subject to this fee in FY 2012.

In estimating the fee revenue to be generated by generic new animal drug product fees in FY 2012, FDA is assuming that approximately 10 percent of the products invoiced, or 36, will not pay fees in FY 2012 due to fee waivers

and reductions. Based on experience with other user fee programs and the first 3 years of AGDUFA, FDA believes that this is a reasonable basis for estimating the number of fee-paying products in FY 2012.

Accordingly, the Agency estimates that a total of 322 (358 minus 36) products will be subject to product fees in FY 2012.

B. Product Fee Rates for FY 2012

FDA must set the fee rates for FY 2012 so that the estimated 322 products that pay fees will generate a total of $1,997,000. To generate this amount will require the fee for a generic new animal drug product, rounded to the nearest 5 dollars, to be $6,200.

V. Generic New Animal Drug Sponsor Fee Calculations for FY 2012

A. Sponsor Fee Revenues and Numbers of Fee-Paying Sponsors

The generic new animal drug sponsor fee (also referred to as the sponsor fee) must be paid annually by each person who: (1) Is named as the applicant in an abbreviated application for a new generic animal drug, except for an approved application for which all subject products have been removed from listing under section 510 of the FD&C Act, or has submitted an investigational submission for a generic new animal drug that has not been terminated or otherwise rendered inactive; and (2) had an abbreviated application for a generic new animal drug, supplemental abbreviated application for a generic new animal drug, or investigational submission for a generic new animal drug pending at FDA after September 1, 2008 (see 21 U.S.C. 379j–21(k)(7) and 379j–21(a)(3)). A generic new animal drug sponsor is subject to only one such fee each fiscal year (see 21 U.S.C. 379j–21(a)(3)(B)). Applicants with more than 6 approved abbreviated applications will pay 100 percent of the sponsor fee, applicants with 2 to 6 approved abbreviated applications will pay 75 percent of the sponsor fee, and applicants with 1 or fewer approved abbreviated applications will pay 50 percent of the sponsor fee (see 21 U.S.C. 379j–21(a)(3)(B)). The sponsor fees are to be set so that they will generate $1,997,000 in fee revenue for FY 2012. This is the amount set out in the statute and no adjustments are required for FY 2012.

To set generic new animal drug sponsor fees to realize $1,997,000, FDA must make some assumptions about the number of sponsors who will pay these fees in FY 2012. Based on the number of firms that meet this definition, FDA estimates that in FY 2012, 12 sponsors will pay 100 percent fees, 13 sponsors will pay 75 percent fees, and 38 sponsors will pay 50 percent fees. That totals the equivalent of 40.75 full sponsor fees (12 times 100 percent or 12, plus 13 times 75 percent or 9.75, plus 38 times 50 percent or 19).

FDA estimates that about 10 percent of all of these sponsors, or 4, may qualify for a minor use/minor species waiver.

Accordingly, the Agency estimates that the equivalent of 36.75 full sponsor fees (40.75 minus 4) are likely to be paid in FY 2012.

B. Sponsor Fee Rates for FY 2012

FDA must set the fee rates for FY 2012 so that the estimated equivalent of 36.75 full sponsor fees will generate a total of $1,997,000. To generate this amount will require the 100-percent fee for a generic new animal drug sponsor, rounded to the nearest $50, to be $54,350. Accordingly, the fee for those paying 75 percent of the full sponsor fee will be $40,763, and the fee for those paying 50 percent of the full sponsor fee will be $27,175.

VI. Fee Schedule for FY 2012

The fee rates for FY 2012 are summarized in table 2 of this document.

TABLE 2—FY 2012 FEE RATES

Generic new animal drug user fee category	Fee rate for FY 2012
Abbreviated Application Fee for Generic New Animal Drug Application	$124,900
Generic New Animal Drug Product Fee	6,200
100 Percent Generic New Animal Drug Sponsor Fee[1]	54,350
75 Percent Generic New Animal Drug Sponsor Fee[1]	40,763
50 Percent Generic New Animal Drug Sponsor Fee[1]	27,175

[1] An animal drug sponsor is subject to only one such fee each fiscal year.

VII. Procedures for Paying FY 2012 Generic New Animal Drug User Fees

A. Abbreviated Application Fees and Payment Instructions

The FY 2012 fee established in the new fee schedule must be paid for an abbreviated new animal drug application subject to fees under AGDUFA that is submitted on or after October 1, 2011. Payment must be made in U.S. currency by check, bank draft, or U.S. postal money order payable to the order of the Food and Drug Administration, by wire transfer, or by automatic clearing house using *Pay.gov.* (The *Pay.gov* payment option is available to you after you submit a cover sheet. Click the ''Pay Now'' button). On your check, bank draft, or U.S. postal money order, please write your application's unique Payment Identification Number (PIN), beginning with the letters ''AG'', from the upper right-hand corner of your completed Animal Generic Drug User Fee Cover Sheet. Also write the FDA post office box number (PO Box 953877) on the enclosed check, bank draft, or money order. Your payment and a copy of the completed Animal Generic Drug User Fee Cover Sheet can be mailed to: Food and Drug Administration, P.O. Box 953877, St. Louis, MO 63195–3877.

If payment is made via wire transfer, send payment to U. S. Department of the Treasury, TREAS NYC, 33 Liberty St., New York, NY 10045, *Account Name: Food and Drug Administration, account number:* 75060099, *routing number:* 021030004, *SWIFT number:* FRNYUS33. You are responsible for any administrative costs associated with the processing of a wire transfer. Contact your bank or financial institution regarding the amount of the fees that need to be paid in addition to the wire transfer amount.

If you prefer to send a check by a courier such as Federal Express (FEDEX) or United Parcel Service (UPS), the courier may deliver the check and printed copy of the cover sheet to: U.S. Bank, *Attn:* Government Lockbox 953877, 1005 Convention Plaza, St. Louis, MO 63101.

(**Note:** This address is for courier delivery only. If you have any questions concerning courier delivery, contact the U.S. Bank at 314–418–4821. This telephone number is only for questions about courier delivery.)

The tax identification number of the Food and Drug Administration is 530196965.

(**Note:** In no case should the payment for the fee be submitted to FDA with the application.)

It is helpful if the fee arrives at the bank at least a day or two before the abbreviated application arrives at FDA's Center for Veterinary Medicine. FDA records the official abbreviated application receipt date as the later of the following: The date the application was received by FDA's CVM, or the date U.S. Bank notifies FDA that your payment in the full amount has been received, or when the U.S. Treasury notifies FDA of payment. U.S. Bank and the U.S. Treasury are required to notify FDA within 1 working day, using the PIN described previously.

B. Application Cover Sheet Procedures

Step One—Create a user account and password. Log onto the AGDUFA Web site at *http://www.fda.gov/ForIndustry/UserFees/AnimalGenericDrugUserFeeActAGDUFA/ucm137049.htm* and scroll down the page until you find the link ''Create AGDUFA User Fee Cover Sheet.'' Click on that link and follow the directions. For security reasons, each firm submitting an application will be assigned an organization identification number, and each user will also be required to set up a user account and password the first time you use this site. Online instructions will walk you through this process.

Step Two—Create an Animal Generic Drug User Fee Cover Sheet, transmit it to FDA, and print a copy. After logging into your account with your user name and password, complete the steps required to create an Animal Generic Drug User Fee Cover Sheet. One cover sheet is needed for each abbreviated animal drug application. Once you are satisfied that the data on the cover sheet is accurate and you have finalized the cover sheet, you will be able to transmit it electronically to FDA and you will be able to print a copy of your cover sheet showing your unique PIN.

Step Three—Send the payment for your application as described in section VII.A of this document.

Step Four—Please submit your application and a copy of the completed Animal Generic Drug User Fee Cover Sheet to the following address: Food and Drug Administration, Center for Veterinary Medicine, Document Control Unit (HFV–199), 7500 Standish Pl., Rockville, MD 20855.

C. Product and Sponsor Fees

By December 31, 2011, FDA will issue invoices and payment instructions for product and sponsor fees for FY 2012 using this fee schedule. Fees will be due and payable 30 days after the issuance of the invoices. FDA will issue invoices in November 2012 for any products and sponsors subject to fees for FY 2012 that qualify for fees after the December 2011 billing.

Dated: July 26, 2011.

Leslie Kux,

Acting Assistant Commissioner for Policy.

[FR Doc. 2011–19334 Filed 7–29–11; 8:45 am]

BILLING CODE 4160–01–P

DEPARTMENT OF HEALTH AND HUMAN SERVICES

Food and Drug Administration

[Docket No. FDA–2011–N–0529]

Burden of Food and Drug Administration Food Safety Modernization Act Fee Amounts on Small Business; Request for Comments

AGENCY: Food and Drug Administration, HHS.

ACTION: Notice; Request for comments and information.

SUMMARY: The Food and Drug Administration (FDA) is announcing the establishment of a docket to obtain information that will be used to formulate a proposed set of guidelines in consideration of the burden of fee amounts on small business, as set forth in the FDA Food Safety Modernization Act (FSMA). FSMA provides the Agency with authority under the Federal Food, Drug, and Cosmetic Act (the FD&C Act) to assess and collect user fees, including those for costs associated with certain domestic and foreign facility reinspections, failure to comply with a recall order, and importer reinspections. The Agency is seeking public comment on what burdens these fees impose on small business, and whether and how the Agency should alleviate such burdens. In particular, the Agency is seeking public comments on whether a reduction of fees or other consideration for small business is appropriate, and if so, what factors the Agency should consider for each. In addition, the Agency is seeking public comment on how small business should be defined or recognized. FDA is establishing this docket in order to provide an opportunity for interested parties to provide data and share views that will inform future Agency actions with respect to these matters.

DATES: Submit either electronic or written comments by October 17, 2011.

ADDRESSES: Submit electronic comments to *http://www.regulations.gov.* Submit written comments to the Division of Dockets Management (HFA–305). Food and Drug Administration, 5630 Fishers Lane, rm. 1061, Rockville, MD 20852.

FOR FURTHER INFORMATION CONTACT: Alexis Nazario-Negron, Office of Financial Management, Food and Drug Administration, 1350 Piccard Dr., rm. 210E,Rockville, MD 20850, 301–796–7223, *Alexis.Nazario-Negron@fda.hhs.gov.*

SUPPLEMENTARY INFORMATION:

I. Background

Each year about 48 million people (1 in 6 Americans) are sickened, 128,000 are hospitalized, and 3,000 die from food borne diseases, according to recent data from the Centers for Disease Control and Prevention (Refs. 1 and 2). This is a significant public health burden that is largely preventable.

FSMA (Pub. L. 111–353), signed into law by President Obama on January 4, 2011, enables FDA to better protect public health by helping to ensure the safety and security of the food supply. It enables FDA to focus more on preventing food safety problems rather than reacting to problems after they occur. The law also provides FDA with new enforcement authorities to help it achieve higher rates of compliance with prevention- and risk-based food safety standards and to better respond to problems when they do occur. The law also gives FDA important new tools to better ensure the safety of imported foods and directs FDA to build an integrated national food safety system in partnership with State and local authorities.

Among the new authorities Congress provided in FSMA, the Secretary of Health and Human Services (and by delegation, FDA) is to assess and collect fees from industry for FDA's costs associated with certain activities. Section 107(a) of FSMA (which amends the FD&C Act by adding section 743 (21 U.S.C. 379j-31)) mandates that FDA assess and collect fees for costs associated with certain domestic and foreign facility reinspections, failure to comply with a recall order under sections 423 and 412(f) of the FD&C Act (21 U.S.C. 350l and 350a(f)), and certain importer reinspections (section 743(a)(1) of the FD&C Act).[1]

Section 743(b)(2)(A) of the FD&C Act specifies that the Agency must base these fees on an estimation of 100 percent of the costs of the various activities which are described in section 743(a)(1), for the fiscal year. These fees must be published in the **Federal Register** not later than 60 days before the start of each fiscal year. Elsewhere in this issue of the **Federal Register**, FDA is publishing notice of these fees.

Congress directed FDA to publish, within 180 days of enactment of FSMA, a proposed set of guidelines in consideration of the burden of fee

[1] FDA is not soliciting comments, in this **Federal Register** notice, on the burdens to small businesses that participate in the voluntary qualified importer program (VQIP) under section 743(a)(1)(C) of the FD&C Act. FDA intends to consider such burdens at the time the VQIP is established.

amounts on small business (section 743(b)(2)(B)(iii) of the FD&C Act). Such consideration may include reduced fee amounts for small businesses. However, FDA would like to gather additional information before publishing such guidelines. Therefore, the Agency is publishing this notice to request public input to help the Agency understand what factors should be taken into account when drafting the proposed guidelines. The Agency intends to consider the comments received and then publish for comment a proposed set of guidelines on the considerations of the burden of fee amounts on small business.

Any adjustment to the fee schedule for small business must be done through notice and comment rulemaking (section 743(b)(2)(B)(iii) of the FD&C Act). Thus, the Agency would consider the proposed set of guidelines, and comments on such guidelines, in any future rulemaking should it decide to propose to adjust the fee schedule for small business.

II. Request for Comments and Information

In order to better inform the Agency, the Agency seeks comment on the following questions, although any additional comments that can inform the guidelines are welcome.

A. Is a fee reduction or other consideration for small business appropriate? Please explain

Section 743(b)(2)(B)(iii) of the FD&C Act states that the proposed set of guidelines may include consideration of reduced fee amounts for small business, but consideration of reduced fee amounts is not required.

1. What is the impact, if any, of fee amounts on small business, in general, or to specific types of small businesses, that FDA should consider in the proposed set of guidelines? Please explain.

2. Should the Agency consider the type of fee collected when considering the burdens to small business? For example, do the types of activities for which a fee is collected for reinspection have a different impact to a small business than those collected based on a failure to comply with a recall order? Please explain.

3. Assuming there is an impact of fee amounts to small business, or certain types of small businesses, should the Agency consider a reduction in the fees for such small businesses in the proposed set of guidelines? If so, should the Agency consider the reduction in fees to all small businesses, or for only those small businesses that have a demonstrated need for reduced fees? Please explain. If the Agency should not consider a reduction in the fees for small business, why not? Please explain.

4. Are there ways to alleviate any burden on small business other than a fee reduction? Please explain.

B. How should small business be defined or recognized for the purpose of the proposed guidelines?

Several provisions in FSMA require FDA to define small and very small business. For example, section 103(a) of FSMA amends the FD&C Act by adding section 418 (21 U.S.C. 350g) regarding ''Hazard Analysis and Risk-Based Preventive Controls.'' Section 418(n)(1)(B) of the FD&C Act requires FDA to define ''small business'' and ''very small business'' for the purpose of the preventive control regulations for facilities. Similarly, FSMA section 105(a) amends the FD&C Act by adding section 419 (21 U.S.C. 350h) regarding standards for produce safety. Section 419(a)(3)(F) of the FD&C Act requires FDA to define ''small business'' and ''very small business'' for the purpose of the produce safety regulations.

In addition, the Agency has issued a number of final rules where the Agency considered business size when considering the regulatory impact of the rule to industry, including the following final rules:

- ''Procedures for the Safe and Sanitary Processing and Importing of Fish and Fishery Products'' (60 FR 65096, December 18, 1995) (Docket No. FDA–1993–N–0065 (formerly Docket No. 1993N–0195));
- ''Hazard Analysis and Critical Control Point (HAACP); Procedures for the Safe and Sanitary Processing and Importing of Juice'' (66 FR 6138, January 19, 2001) (Docket No. FDA–1997–N–0505 (formerly Docket No. 1997N–0511));
- ''Current Good Manufacturing Practice in Manufacturing, Packaging, Labeling, or Holding Operations for Dietary Supplements'' (72 FR 34752, June 25, 2007) (Docket No. FDA–1996–N–0028 (formerly Docket No. 1996N–0417 or 97N–0417));
- ''Food Labeling, Safe Handling Statements, Labeling of Shell Eggs; Refrigeration of Shell Eggs Held for Retail Distribution'' (65 FR 76092, December 5, 2000) (Docket No. FDA–1998–N–0087 (formerly Docket No. 1998N–1230); Docket No. FDA–1996–P–0025 (formerly Docket No. 96P–0418); and Docket No. FDA–1997–P–0017 (formerly Docket No. 1997P–0197));
- ''Prevention of Salmonella Enteritidis in Shell Eggs During Production, Storage, and Transportation'' (74 FR 33030, July 9, 2009) (Docket No. FDA–2000–N–0190 (formerly Docket No. 2000N–0504)).

FDA seeks comment on how a small business should be defined or recognized for purposes of the proposed set of guidelines in consideration of the burden of fee amounts on small business. More specifically, the Agency requests comment on the following questions.

1. If FDA has defined, by regulation under other FSMA or non-FSMA authorities, an entity as a small or a very small business, should such a definition be considered in the proposed set of guidelines to identify the businesses that may be burdened by the fee amounts under section 743 of the FD&C Act or should the Agency consider a separate definition of small business for purposes of considering the burden of fee amounts? Please explain.

2. If the Agency relies on an existing regulatory definition of small or very small business that the Agency established under other FSMA or non-FSMA authorities, should any such definition apply in any circumstance where a fee is imposed or only where the fee derives from the rule where such business is defined as a small business? For example, if a facility is reinspected for a violation of the preventive controls regulations, should the Agency consider adjustments to the fee only if the facility meets the definition of small business under the preventive controls regulations, or should the Agency consider such adjustments if the facility meets any definition of small business under any FDA regulation? Please explain.

3. There may be circumstances where no regulatory definition of small business exists for a given facility. Under these circumstances, what factors or characteristics should FDA use to identify small businesses for which FDA may consider the burden of fee amounts? Please explain. Factors to consider could include, but are not limited to, the segment of the food supply chain to which the entity belongs (*e.g.,* growers, processors, importers and distributors, retailers, *etc.*); the sector to which the entity belongs (*e.g.,* seafood, produce, dairy, eggs, juice, dietary supplements, *etc.*); the number of employees; the gross revenue, net income, net assets, market liquidity, or other financial measures or ratios; and whether the entity has a subsidiary or is a subsidiary of a parent company.

C. If FDA considers reduced fee amounts in the proposed set of guidelines, what factors should FDA consider in establishing the amount by which fees could be reduced?

1. Should FDA consider the following:

- A waiver of all of the fees;
- A percentage reduction of the fees; or
- A fixed dollar reduction of the fees?

2. Are there circumstances that justify one approach over another? Please explain.

3. Are there other approaches that should be considered? Please explain.

III. Comments

Interested persons may submit to the Division of Dockets Management (see **ADDRESSES**) either electronic or written comments regarding this document. It is only necessary to send one set of comments. It is no longer necessary to send two copies of mailed comments. Identify comments with the docket number found in brackets in the heading of this document. Received comments may be seen in the Division of Dockets Management between 9 a.m. and 4 p.m., Monday through Friday.

IV. References

The following references have been placed on display in the Division of Dockets Management (see **ADDRESSES**) and may be seen by interested persons between 9 a.m. and 4 p.m., Monday through Friday. (FDA has verified the Web site addresses, but FDA is not responsible for any subsequent changes to the Web sites after this document publishes in the **Federal Register**.)

1. Scallan E., R.M. Hoekstra, F.J. Angulo, R.V. Tauxe, M-A. Widdowson, S.L. Roy, *et al.,* ''Foodborne Illness Acquired in the United States—Major Pathogens,'' *Emerging Infectious Diseases,* 17(1):7–15, 2011. Available at *http://www.cdc.gov/EID/content/17/1/7.htm.*

2. Scallan E., P.M. Griffin, F.J. Angulo, R.V. Tauxe, R.M. Hoekstra, ''Foodborne Illness Acquired in the United States—Unspecified Agents,'' *Emerging Infectious Diseases,* 17(1):16–22, 2011. Available at *http://www.cdc.gov/EID/content/17/1/16.htm.*

Dated: July 26, 2011.

Leslie Kux,

Acting Assistant Commissioner for Policy.

[FR Doc. 2011–19333 Filed 7–29–11; 8:45 am]

BILLING CODE 4160–01–P

DEPARTMENT OF HEALTH AND HUMAN SERVICES

Food and Drug Administration

[Docket No. FDA–2011–N–0528]

Food Safety Modernization Act Domestic and Foreign Facility Reinspections, Recall, and Importer Reinspection User Fee Rates for Fiscal Year 2012

AGENCY: Food and Drug Administration, HHS.

ACTION: Notice.

SUMMARY: The Food and Drug Administration (FDA) is announcing the fiscal year (FY) 2012 fee rates for certain domestic and foreign facility reinspections, failure to comply with a recall order, and importer reinspections that are mandated in the Federal Food, Drug, and Cosmetic Act (the FD&C Act), amended by the FDA Food Safety Modernization Act (FSMA). These fees are effective on October 1, 2011, and will remain in effect through September 30, 2012. Invoices for these fees for FY 2012 will be issued using the fee schedule established in this document. FDA is accepting comments to this document and intends to consider such comments in implementing these user fees in FY 2013.

DATES: Submit either electronic or written comments by October 31, 2011.

ADDRESSES: Submit electronic comments to *http://www.regulations.gov.* Submit written comments to the Division of Dockets Management (HFA–305), Food and Drug Administration, 5630 Fishers Lane, Rm. 1061, Rockville, MD 20852.

FOR FURTHER INFORMATION CONTACT: Amy Waltrip, 12420 Parklawn Dr., Rm. 2012, Rockville, MD 20857, 301–796–8811, email: *Amy.Waltrip@fda.hhs.gov.*

SUPPLEMENTARY INFORMATION:

I. Background

FSMA (Pub. L. 111–353), section 743 of the FD&C Act (21 U.S.C. 379j–31), establishes three different kinds of fees. The fees are assessed for the costs of the following activities: (1) Certain domestic and foreign facility reinspections (section 743(a)(1)(A)), (2) failure to comply with a recall order under section 423 or 412(f) of the FD&C Act (section 743(a)(1)(B)), and (3) certain importer reinspections (section 743(a)(1)(D)).

Fees for each of these activities are to be established to capture 100 percent of the costs of each activity for each year (sections 743(b)(2)(A), (B), and (D) of the FD&C Act), and must be made available solely to pay for the costs of each activity for which the fee was incurred (section 743(b)(3) of the FD&C Act.

These fees are effective on October 1, 2011, and will remain in effect through September 30, 2012. FDA is accepting comments to this document and intends to consider such comments, as well as experience and additional data gained in implementing these user fees in FY 2012, in implementing these user fees in FY 2013.

II. Estimating the Average Cost of a Supported Direct FDA Work Hour for FY 2012

FDA is required to estimate 100 percent of its cost for each activity and assess fees for FY 2012. In each year, the costs of salary (or personnel compensation) and benefits for FDA employees account for between 50 and 60 percent of the funds available to, and used by, FDA. Almost all of the remaining funds (or the operating funds) available to FDA are used to support FDA employees for paying rent, travel, utility, information technology, and other operating costs.

A. Estimating the Full Cost Per Direct Work Hour in FY 2010

In general, the starting point for estimating the full cost per direct work hour is to estimate the cost of a full-time-equivalent (FTE) or paid staff year for the relevant activity. This is most reasonably done by dividing the total funds allocated to the elements of FDA primarily responsible for carrying out the activities for which fees are being collected by the total FTEs allocated to those activities, using information from the most recent FY for which data are available. For the purposes of the FSMA fee provisions, primary responsibility for the activities for which fees will be collected rests with FDA's Office of Regulatory Affairs (ORA), which carries out inspection and other field-based activities on behalf of FDA's product centers, including the Center for Food Safety and Applied Nutrition (CFSAN) and the Center for Veterinary Medicine (CVM), which have FSMA implementation responsibilities. Thus, as the starting point for estimating the full cost per direct work hour, FDA will use the total funds allocated to ORA for CFSAN and CVM related field activities. The most recent FY with available data is FY 2010. In that year, FDA obligated a total of $626,095,116 for the Office of Regulatory Affairs (ORA) in carrying out work related to programs of the CFSAN and CVM, excluding the costs of foreign inspection travel. These are the staff primarily conducting the work related to the reinspection and recall activities

for which fees would be charged. The obligated total amount paid for salary, benefits, and operating costs of 2,701 FTEs or paid staff years utilized by ORA in FY 2010, but exclude the cost of foreign inspection travel. Dividing $626,095,116 by 2,701 FTEs, results in an average cost of $231,801 per paid staff year, excluding the costs of foreign inspection travel.

Not all of the FTEs required to support the activities for which fees will be collected are conducting direct work such as inspecting or reinspecting facilities, examining imports, or monitoring recalls. Data collected over a number of years and used consistently in other FDA user fee programs (e.g., under the Prescription Drug User Fee Act (PDUFA) and the Medical Device User Fee and Modernization Act (MDUFMA)) show that every seven FTEs who perform direct FDA work require three indirect and supporting FTEs. These indirect and supporting FTEs function in budget, facility, human resource, information technology, planning, security, administrative support, legislative liaison, legal counsel, program management, and other essential program areas. On average, two of these indirect and supporting FTEs are located in ORA or the FDA center where the direct work is being conducted, and one of them is located in the Office of the Commissioner. To get the fully supported cost of an FTE, FDA needs to multiply the average cost of an FTE by 1.43, to take into account the indirect and supporting functions. The 1.43 factor is derived by dividing the 10 fully supported FTEs by 7 direct FTEs. In FY 2010, the average cost of an FTE was $231,801. Multiplying this amount by 1.43 results in an average fully supported cost of $331,476 per FTE, excluding the cost of foreign inspection travel.

To calculate an hourly rate, FDA must divide the average fully supported cost of $331,476 per FTE by the average number of supported direct FDA work hours. See table 1.

TABLE 1—SUPPORTED DIRECT FDA WORK HOURS IN A PAID STAFF YEAR

Total number of hours in a paid staff year	2,080
Less:	
10 paid holidays	80
20 days of annual leave	160
10 days of sick leave	80
10 days of training	80
2 hours of meetings per week	80
Net Supported Direct FDA Work Hours Available for Assignments	1,600

Dividing the average fully supported cost of an FTE in FY 2010 ($331,476) by the total number of supported direct work hours available for assignment (1,600) results in an average fully supported cost of $207 (rounded to the nearest dollar), excluding foreign inspection travel costs, per supported direct work hour in FY 2010—the last FY for which data are available.

B. Adjusting FY 2010 Costs for Inflation to Estimate FY 2012 Costs

To adjust the hourly rate for FY 2012, FDA must estimate cost of inflation in each year for FY 2011 and FY 2012. FDA uses the method prescribed for estimating inflationary costs under the PDUFA provisions of the FD&C Act (section 736(c)(1) (21 U.S.C. 379h(c)(1))), the only provision the FD&C Act that provides a method for estimating future inflationary costs. The inflationary adjustment specified in these provisions, since FY 2008, is the greater of the following amounts: (1) The total percentage change that occurred in the Consumer Price Index (CPI) (all items; U.S. city average) during the 12-month period ending June 30 preceding the FY for which fees are being set; (2) the total percentage pay change for the previous FY for Federal employees stationed in the Washington, DC metropolitan area; or (3) the average annual change in cost, per FDA FTE, of all personnel compensation and benefits paid per FTE over the previous five of the most recent six FYs. PDUFA IV provides for this adjustment to be cumulative and compounded annually after FY 2008 (see section 736(c)(1)).

For FY 2012, the first factor is the CPI increase for the 12-month period ending in June 2011. The CPI for June 2011 was 225.722 and the CPI for June 2010 was 217.965. (These CPI figures are available on the Bureau of Labor Statistics Web site at *http://data.bls.gov/cgi-bin/surveymost?bls* by checking the first box under ''Price Indexes'' and then clicking ''Retrieve Data'' at the bottom of the page. FDA has verified the Web site addresses throughout this document, but is not responsible for any subsequent changes to the Web sites after this document publishes in the **Federal Register**.) The CPI for June 2011 is 3.559 percent higher than the CPI for the previous 12-month period.

The second factor for the FY 2012 inflationary increase is the increase in pay for the previous FY (FY 2011 in this case) for Federal employees stationed in the Washington, DC metropolitan area. (This figure is published by the Office of Personnel Management, and can be found on the Web site at *http://www.opm.gov/oca/11tables/html/dcb.asp* above the salary table. For FY 2011, the inflationary increase was 0.00 percent.

For FY 2012, the third factor is the average change in FDA's cost for compensation and benefits per FTE over the previous five of the most recent six FYs (FY 2006 through FY 2010). The data on total compensation and benefits paid and numbers of FTEs paid, from which the average cost per FTE can be derived, are published in FDA's Justification of Estimates for Appropriations Committees. Table 2 of this document summarizes the actual costs and FTE data for the specified FYs, and provides the percent changes from the previous FYs and the average percent change over the previous five of the most recent six FYs, which is 3.72 percent.

TABLE 2—FDA PERSONNEL COMPENSATION AND BENEFITS (PC&B) EACH YEAR AND PERCENT CHANGE

	FY 2005	FY 2006	FY 2007	FY 2008	FY 2009	FY 2010	Average for latest 5 years
Total PC&B	$1,077,604,000	$1,114,704,000	$1,144,369,000	$1,215,627,000	$1,464,445,000	$1,634,108,000	
Total FTE	9,910	9,698	9,569	9,811	11,413	12,526	
PC&B per FTE	$108,739	$114,942	$119,591	$123,905	$128,314	$130,457	
% Change from Previous Year	5.75%	5.70%	4.05%	3.61%	3.56%	1.67%	3.72%

Taking all three factors into consideration, the inflationary increase for FY 2012 is 3.72 percent. The average percent change over the previous five of the most recent six FYs is 3.72 percent which is greater than the CPI change

during the 12-month period ending June 30 preceding the FY for which fees are being set (3.559 percent), and the increase in pay for the previous FY (FY 2011 in this case) for Federal employees stationed in the Washington, DC metropolitan area (0.00 percent). Therefore, the average percent change in PC&B cost per FTE (3.72 percent) becomes the inflation adjustment for the fee revenue for FY 2012.

The inflationary adjustment for FY 2011 under the same provisions in section 736(c)(1) of the FD&C Act was 4.53 percent—the average percent change over the previous five of the most recent six FYs (FY 2005 through FY 2009). This 4.53 percent is greater than the CPI increase during the 12-month period ending June 30 preceding the FY for which fees were being set on June 30, 2010 (1.053 percent), and the increase in pay for FY 2010 for Federal employees stationed in Washington, DC (2.42 percent).

Section 736(c)(1) of the FD&C Act requires the inflationary adjustment to be cumulative and compounded. This factor for FY 2012 (3.72 percent) is compounded by adding 1 and then multiplying by 1 plus the inflationary adjustment factor for FY 2011 (4.53 percent), to account for the 2 years of inflationary adjustments since FY 2010. The result of this multiplication (1.0372 times 1.0453) becomes the inflationary adjustment for FY 2012, which is 1.0842, or an increase of 8.42 percent over FY 2010 costs.

Increasing FY 2010 average fully supported cost per supported direct FDA work hour of $207 (excluding foreign inspection travel costs) by 8.42 percent yields an inflationary adjusted cost of $224 per a supported direct work hour in FY 2012, excluding foreign inspection travel costs. This is the unit cost that FDA will use in billing the reinspection and the recall activities for FY 2012 if no foreign travel is required for the activity.

In FY 2010, ORA spent a total of $1,010,900 on a total of 91 foreign inspection trips related to FDA's food and veterinary medicine programs, which averaged a total of $11,109 per foreign inspection trip. These trips averaged 3 weeks (or 120 paid hours) per trip. Dividing $11,109 per trip by 120 hours per trip results in a total and an additional cost of $93 per paid hour spent for foreign inspection travel costs in FY 2010. To adjust $93 for inflationary increases in FY 2011 and FY 2012, FDA must multiply it by the same inflation factor mentioned previously in this document (1.0842) which results in an estimated cost of $101 dollars per paid hour in addition to $224 for a total of $335 per paid hour ($224 plus $101) for each direct hour of work requiring foreign inspection travel. These are the rates that FDA will use in charging fees in FY 2012 when foreign travel is required.

TABLE 3—FSMA FEE SCHEDULE FOR FY 2012

Fee category	Fee rates for FY 2012
Hourly rate if no foreign travel is required	$224
Hourly rate if foreign travel is required	335

Congress directed FDA to publish, within 180 days of enactment of FSMA, a proposed set of guidelines in consideration of the burden of fee amounts on small business (section 743(b)(2)(B)(iii) of the FD&C Act). Such consideration may include reduced fee amounts for small businesses. FDA believes it is important to gather additional information before publishing such guidelines. Therefore, the Agency is publishing a separate document in this issue of the **Federal Register** requesting public input to help the Agency understand what factors should be taken into account when drafting the proposed guidelines. The Agency intends to consider the comments received and then publish for comment a proposed set of guidelines on the considerations of the burden of fee amounts on small business. Any adjustment to the fee schedule for small business must be done through notice and comment rulemaking (see section 743(b)(2)(B)(iii)). Thus, there will be no separate small business fees published for FY 2012 (table 3 of this document) and the published fees in this document will apply to all businesses in FY 2012.

FDA recognizes, however, that for some small businesses the full cost recovery of FDA reinspection or recall oversight could impose severe economic hardship, and there may be unique circumstances in which some relief would be appropriate. Thus, during FY 2012, FDA will consider waiving in limited cases some or all of an invoiced fee based on a severe economic hardship, the nature and extent of the underlying violation, and other relevant factors.

III. Fees for Reinspections of Domestic or Foreign Facilities Under Section 743(a)(1)(A)

A. What will cause this fee to be assessed?

The fee will be assessed for a reinspection conducted under section 704 of the FD&C Act to determine whether corrective actions have been implemented and are effective and compliance has been achieved to the Secretary of Health and Human Services' (the Secretary) (and, by delegation, FDA's) satisfaction at a facility that manufactures, processes, packs or holds food [1] for consumption necessitated as a result of a previous inspection (also conducted under section 704) of this facility which had a final classification of Official Action Indicated (OAI) conducted by or on behalf of FDA, when FDA determined the non-compliance was materially related to food safety requirements of the FD&C Act. FDA considers such non-compliance to include non-compliance with a statutory or regulatory requirement under section 402 of the FD&C Act (21 U.S.C. 342) and section 403(w) of the FD&C Act (21 U.S.C. 343(w)). However, FDA does not consider non-compliance that is materially related to a food safety requirement to include circumstances where the non-compliance is of a technical nature and not food safety related (e.g., failure to comply with a food standard or incorrect font size on a food label). Determining when non-compliance, other than under section 402 and 403(w) of the FD&C Act, is materially related to food safety may depend on the facts of a particular situation. FDA may consider issuing guidance to provide additional information about the circumstances under which FDA would consider when non-compliance is materially related to a food safety requirement.

Under section 743(a)(1)(A) of the FD&C Act, FDA shall assess and collect fees from ''the responsible party for each domestic facility (as defined in section 415(b) (21 U.S.C. 350d)) and the United States agent for each foreign facility subject to a reinspection'' to cover reinspection-related costs.

Section 743(a)(2)(A)(i) of the FD&C Act defines the term ''reinspection'' with respect to domestic facilities as ''1 or more inspections conducted under section 704 subsequent to an inspection conducted under such provision which identified non-compliance materially related to a food safety requirement of th[e] Act, specifically to determine whether compliance has been achieved to the Secretary's satisfaction.''

The FD&C Act does not contain a definition of ''reinspection'' specific to foreign facilities. In order to give meaning to the language in section

[1] The term ''food'' for purposes of this document has the same meaning as such term in section 201(f) of the FD&C Act (21 U.S.C. 321(f)).

743(a)(1)(A) of the FD&C Act to collect fees from the United States agent of a foreign facility subject to a reinspection, the Agency is using the following definition, of ''reinspection,'' for purposes of assessing and collecting fees under section 743(a)(1)(A) of the FD&C Act, with respect to a foreign facility: ''1 or more inspections conducted by officers or employees duly designated by the Secretary subsequent to such an inspection which identified non-compliance materially related to a food safety requirement of the FD&C Act, specifically to determine whether compliance has been achieved to the Secretary's (and, by delegation, FDA's) satisfaction.''

This definition allows FDA to fulfill the mandate to assess and collect fees from the United States agent of a foreign facility in the event that an inspection reveals non-compliance materially-related to a food safety requirement causing one or more subsequent inspections to determine whether compliance has been achieved to the Secretary's (and, by delegation, FDA's) satisfaction. By requiring the initial inspection to be conducted by officers or employees duly designated by the Secretary, the definition ensures that a foreign facility would be subject to fees only in the event that FDA, or an entity designated to act on its behalf, has made the requisite identification at an initial inspection of non-compliance materially related to a food-safety requirement of the FD&C Act. The definition of ''reinspection-related costs,'' as defined in section 743(a)(2)(B) of the FD&C Act, relates to both a domestic facility reinspection and a foreign facility reinspection, as described in section 743(a)1)(A) of the FD&C Act.

B. Who will be responsible for paying this fee?

The FD&C Act states that this fee is to be paid by the responsible party for each domestic facility (as defined in section 415(b) of the FD&C Act) and by the United States agent for each foreign facility (section 743(a)(1)(A) of the FD&C Act). This is the party to whom FDA will send the invoice for any fees that are assessed under this section.

C. How much will this fee be?

The fee is based on the number of direct hours spent on such reinspections, including time spent conducting the physical surveillance and/or compliance reinspection at the facility, or whatever components of such an inspection are deemed necessary, making preparations and arrangements for the reinspection, traveling to and from the facility, preparing any reports, analyzing any samples or examining any labels if required, and performing other activities as part of the OAI reinspection until the facility is again determined to be in compliance. The direct hours spent on each such reinspection will be billed at the appropriate hourly rate shown in table 3 of this document.

IV. Fees for Non-Compliance With a Recall Order Under Section 743(a)(1)(B)

A. What will cause this fee to be assessed?

The fee will be assessed for not complying with a recall order under section 423(d) or 412(f) of the FD&C Act to cover food recall activities associated with such order performed by the Secretary (and by delegation, FDA) (section 743(a)(1)(B) of the FD&C Act). Noncompliance may include the following: (1) Not initiating a recall as ordered by FDA; (2) not conducting the recall in the manner specified by FDA in the recall order; or (3) not providing FDA with requested information regarding the recall, as ordered by FDA.

B. Who will be responsible for paying this fee?

Section 743(a)(1)(B) of the FD&C Act states that the fee is to be paid by the responsible party for a domestic facility (as defined in section 415(b) of the FD&C Act and an importer who does not comply with a recall order under section 423 or under section 412(f) of the FD&C Act. In other words, the party paying the fee would be the party that received the recall order.

C. How much will this fee be?

The fee is based on the number of direct hours spent on taking action in response to the firm's failure to comply with a recall order. Types of activities could include conducting recall audit checks, reviewing periodic status reports, analyzing the status reports and the results of the audit checks, conducting inspections, traveling to and from locations, and monitoring product disposition. The direct hours spent on each such recall will be billed at the appropriate hourly rate shown in table 3 of this document.

V. Fees for Import Reinspection/Reexamination Under Section 743(a)(1)(D)

A. What will cause this fee to be assessed?

Under section 743(a)(2)(A)(ii) of the FD&C Act, for a fee to be assessed, there must be two sets of examinations. First, there must be an examination conducted under section 801 of the FD&C Act (21 U.S.C. 381), which must identify noncompliance materially related to a food safety requirement of the FD&C Act.

Second, subsequent to the first examination, there must be 1 or more additional examinations conducted under section 801. These additional examinations must be conducted specifically to determine whether compliance has been achieved to the Secretary's (and, by delegation, FDA's) satisfaction. Moreover, per section 743(a)(1)(D) of the FD&C Act, an importer subject to a reinspection will be assessed a fee to cover reinspection-related costs.

FDA has determined that at least the following four specific situations will cause a fee to be assessed:

1. Reconditioning of Imported Food

FDA reviews food that is imported or offered for import to determine admissibility into the United States (see, e.g., section 801(a) of the FD&C Act). Food is subject to refusal of admission if, among other reasons, (a) it appears to be adulterated or misbranded, or (b) if it is a dietary supplement subject to section 761 of the FD&C Act (21 U.S.C. 379aa–1), FDA has credible evidence or information indicating that the responsible person has not complied with a requirement of that section or has not allowed access to records described in that section. When FDA initiates a refusal of admission, often referred to as detaining the product, notice is given to the owner or consignee. If the detention is based on one of the reasons just described, the owner or consignee of the food may request permission to recondition the food under section 801(b) of the FD&C Act. When the basis is that the food appears to be adulterated or misbranded, the request can be to bring the food into compliance by relabeling or other action, such as heat treatment, or to render it other than a food, drug, device, or cosmetic. When the basis relates to section 761 (serious adverse event reporting for dietary supplements), the request can be for the responsible person, as defined in section 761, to take action to ensure that the responsible person is in compliance with section 761.

A request for reconditioning is made after FDA has determined that the food is subject to refusal of admission under section 801(a) of the FD&C Act. For the purpose of section 743 of the FD&C Act, FDA considers its review of information for the purpose of determining whether an article of food is admissible to be ''an examination conducted under section 801.'' If that review leads FDA to determine that the food is subject to

refusal of admission under section 801(a), FDA considers that to mean that its examination ''identified noncompliance'' for the purpose of section 743. This examination could involve, for example, a laboratory analysis of physical samples of the product or a review of the product's label. It could also involve reviewing other information FDA obtains, such as reviewing sample results from a reliable third party, relevant epidemiological evidence, or the results from an FDA or third party inspection of a facility where the food was processed. A detention without physical examination could also be based on information contained in an import alert.

When food is on an import alert, it typically means that FDA has concluded there is sufficient evidence or other information to detain without physical examination of future shipments of the imported food (e.g., that future shipments appear to be adulterated or misbranded) and they are subject to refusal unless the owner or consignee shows the product is compliant (e.g., through third-party laboratory analysis). FDA considers situations where FDA's review of information leads it to conclude that food should be placed on an import alert for detention without physical examination to be ''an examination conducted under section 801 [that] identified noncompliance'' for the purposes of section 743. FDA's Regulatory Procedures Manual (RPM), Chap. 9, discusses the types of reviews FDA conducts, and the types of information it reviews, in determining whether to detain a product or to place a product on an import alert.

For a fee to be assessed under section 743, FDA's determination that the food is subject to refusal of admission must be on a basis materially related to food safety requirements (see section III.A of this document for a discussion about ''materially related to food safety requirements'').

If FDA authorizes a request for reconditioning, the reconditioning operations are carried out under the supervision of either FDA or U.S. Customs and Border Protection (CBP) (section 801(b) of the FD&C Act; 21 CFR 1.96(a)). FDA considers the review and approval of the request, as well as this supervision to be ''1 or more examinations conducted under section 801 * * * specifically to determine whether compliance has been achieved'' to FDA's satisfaction.

2. Importer Seeking Admission of an Article That Has Been Detained

If FDA has determined that an article of food is subject to refusal of admission under section 801(a) of the FD&C Act, FDA gives notice of this to the owner or consignee, who then has an opportunity to introduce evidence regarding the admissibility of the food (section 801(a) of the FD&C Act; 21 CFR 1.94(a)). As discussed previously in this document, where FDA has reviewed information for the purpose of admissibility and determined that the food is subject to refusal of admission under section 801, FDA considers that it has conducted ''an examination conducted under section 801 [that] identified noncompliance.'' This includes situations where FDA's review determines that food should be placed on an import alert for detention without physical examination.

If the owner or consignee chooses to submit evidence regarding admissibility, FDA reviews the information to determine whether—despite the appearance that the product is adulterated, misbranded, or otherwise subject to refusal of admission—the food is compliant and admissible into the United States. The evidence the owner or consignee submits varies. Depending on the circumstances, it could include, for example, the results of laboratory analyses of samples conducted on the owner/consignee's behalf to show the product is not contaminated. FDA considers its review of the evidence submitted to be ''1 or more examinations conducted under section 801 * * * specifically to determine whether compliance has been achieved'' to FDA's satisfaction.

Not all situations where the owner/consignee provides information or evidence to demonstrate compliance will result in the assessment of a fee. An example is if a food, not subject to an Import Alert, is detained based on an appearance of adulteration or misbranding, but information is presented that demonstrates that the food is not adulterated or misbranded. FDA considers such a situation to be one in which a fee is not assessed.

A fee may or may not be assessed under certain circumstances related to food that is detained based on an import alert for detention without physical examination covering food from a particular geographic region or country. FDA may place a region or country on an import alert if there appears to be an ongoing problem or condition in that region or country such that it causes the appearance of a violation for future shipments of imported articles originating there. If food from a region or country is subject to an import alert and is subsequently detained based on the overarching import alert, the owner or consignee may seek admission by providing evidence that the problem or conditions regarding the food it is importing have been resolved. Alternatively, the owner or consignee may provide evidence that the problems or conditions that led to the alert, even if widespread in the region or country, did not apply to its food and, thus, it did not need to resolve any compliance-related issues. FDA considers the latter situation to be one in which a fee is not assessed. A fee may be assessed, however, when FDA reviews compliance information specific to the food being imported or specific to a particular processor in determining whether to issue a region- or country-wide import alert. An example is a situation where FDA analyzed samples of food from Processor A and found it to be contaminated, the food is later placed on a region- or country-wide import alert, and the owner or consignee is now importing or offering for import food from Processor A. If the owner or consignee seeks admission of the food by providing third party laboratory analyses to show the food is not contaminated, FDA's review of this information would be ''1 or more examinations conducted under section 801 * * * specifically to determine whether compliance has been achieved'' to FDA's satisfaction.

3. Entity Requesting Removal From an Import Alert for Detention Without Physical Examination

Once placed on import alert, food imported from a particular firm, region, or country may remain in this status until FDA has sufficient evidence or other information, such as information that removes the appearance of the violation that led to the initial placement on import alert. Depending on the situation that led to the import alert, FDA's RPM Chapter 9 or the import alert itself may explain the types of information that should be provided.

As discussed previously in this document, where FDA has reviewed information and determined that food should be placed on an import alert for detention without physical examination, it considers that it has conducted 1 or more examinations conducted under section 801 that identified noncompliance.

Where an entity requests removal of food from an import alert and provides supporting information, FDA considers its review of this information, along with any other related examination it undertakes in considering the request, to be ''1 or more examinations conducted under section 801 * * * specifically to determine whether compliance has been achieved'' to FDA's satisfaction.

As discussed in section V.A.2 of this document, some requests for removal from region- or country-wide import alerts will not lead to the assessment of a fee. Fees would only be assessed in situations where, in issuing the alert, FDA reviewed compliance information specific to a particular person or entity sufficiently related to the request for removal. An example of such a situation is where FDA analyzed samples of food from Processor A and found it to be contaminated, the food is then placed on a region- or country-wide import alert, and FDA receives a request to remove food from Processor A from the import alert.

4. Destruction of Food That Has Been Refused Admission

If a product is refused admission under section 801(a) of the FD&C Act, it must be exported within 90 days of the document of refusal or it is subject to destruction by CBP (section 801(a) of the FD&C Act). In practice, when a product is destroyed, destruction is often conducted by the owner or consignee under the supervision of FDA or CBP. Where FDA conducts a review and/or approves a destruction proposal and such supervision of destruction occurs, FDA considers this to be ''1 or more examinations conducted under section 801 * * * specifically to determine whether compliance has been achieved'' to FDA's satisfaction.

B. Who will be responsible for paying this fee?

The importer that is subject to the additional examinations that are described in section V.A of this document is responsible for paying the fee, according to section 743(a)(1)(D) of the FD&C Act.

1. Reconditioning of Imported Food

For reconditioning, the entity that is responsible for the reconditioning is responsible for paying the fee. The request for reconditioning can only be made by the owner or consignee of the food (21 CFR 1.95). If ownership changes, the new owner will be responsible for the reconditioning if that new owner executes a bond and obtains a new authorization (21 CFR 1.96(d)).

2. Importer Seeking Admission of an Article That Has Been Detained

The entity that introduces evidence regarding admissibility is responsible for paying this fee. This is the owner or consignee of the food that is being imported or offered for import. (Section 801(a) of the FD&C Act; 21 CFR 1.83(b) and 1.94(a).)

3. Entity Requesting Removal From an Import Alert for Detention Without Physical Examination.

FDA considers the entity that requests removal of the food from the import alert to be the importer subject to the examination and, thus, responsible for paying this fee.

4. Destruction of Food That Has Been Refused Admission

FDA considers the entity that destroys the product under FDA or CBP supervision to be the importer subject to the examination and, thus, responsible for paying this fee.

C. How much will this fee be?

The fee is to cover all expenses incurred in connection with arranging, conducting, and evaluating the results of the one or more additional examinations that are described in section V.A of this document.

For reconditioning, section 801(c) of the FD&C Act directs the owner or consignee to pay all expenses in connection with the supervision of reconditioning with respect to food and certain other FDA-regulated products. Those parties have been paying these expenses, but FDA did not have authority to retain those fees. FDA considers the enactment of section 743 of the FD&C Act to mean that, for food, FDA is now authorized to assess and retain these fees, but only with respect to the reconditioning of food and only if the other conditions of section 743 are met. If a fee is authorized under section 743 for a particular article of food, FDA considers this to mean it cannot collect a fee related to reconditioning that article under section 801(c).

For destruction, section 801(c) of the FD&C Act also directs the owner or consignee to pay all expenses in connection with the destruction of food and certain other FDA-regulated products under section 801(a). However, neither FDA nor CBP have had the authority to retain those fees. FDA considers the enactment of section 743 of the FD&C Act to mean that, for food, FDA is now authorized to assess and retain these fees, but only with respect to the destruction of food and only if the other conditions of section 743 are met. If a fee is authorized under section 743 for a particular article of food, FDA considers this to mean it cannot collect a fee related to destruction of that article under section 801(c) of the FD&C Act.

The direct hours spent on each such import reinspections will be billed at the appropriate hourly rate shown in table 3 of this document.

VI. How must the fees be paid?

An invoice will be sent to the responsible party for paying the fee after FDA completes the work on which the invoice is based. Payment must be made within 30 days of the invoice date in U.S. currency by check, bank draft, or U.S. postal money order payable to the order of the Food and Drug Administration. Detailed payment information will be included with the invoice when it is issued.

VII. What are the consequences of not paying these user fees?

Under section 743(e)(2) of the FD&C Act, any fee that is not paid within 30 days after it is due shall be treated as a claim of the United States Government subject to provisions of subchapter II of chapter 37 of title 31, United States Code.

VIII. Comments

Interested persons may submit to the Division of Dockets Management (see **ADDRESSES**) either electronic or written comments regarding this document. It is only necessary to send one set of comments. It is no longer necessary to send two copies of mailed comments. Identify comments with the docket number found in brackets in the heading of this document. Received comments may be seen in the Division of Dockets Management between 9 a.m. and 4 p.m., Monday through Friday.

Dated: July 26, 2011.

Leslie Kux,

Acting Assistant Commissioner for Policy.

[FR Doc. 2011–19331 Filed 7–29–11; 8:45 am]

BILLING CODE 4160–01–P

DEPARTMENT OF HEALTH AND HUMAN SERVICES

Food and Drug Administration

[Docket No. FDA–2011–N–0556]

Center for Devices and Radiological Health 510(k) Clearance Process; Institute of Medicine Report: ''Medical Devices and the Public's Health, The FDA 510(k) Clearance Process at 35 Years;'' Request for Comments

AGENCY: Food and Drug Administration, HHS.

ACTION: Request for comments.

SUMMARY: The Food and Drug Administration (FDA) is requesting comments on the Institute of Medicine (IOM) report entitled: ''Medical Devices and the Public's Health, The FDA 510(k) Clearance Process at 35 Years.'' The establishment of this public docket does

not signify FDA endorsement or concurrence with any of the conclusions or recommendations contained within the report. FDA may, in the future, take additional measures to solicit public input in the report and specific recommendations contained therein. FDA will not adopt any of the recommendations contained in the report before the close of this comment period.

DATES: Submit either electronic or written comments on the report by September 30, 2011.

ADDRESSES: See the **SUPPLEMENTARY INFORMATION** section for electronic access to the document. Submit electronic comments on the preliminary report to *http://www.regulations.gov.* Submit written comments to the Division of Dockets Management (HFA–305), Food and Drug Administration, 5630 Fishers Lane, rm. 1061, Rockville, MD 20852. Identify comments with the docket number found in brackets in the heading of this document.

FOR FURTHER INFORMATION CONTACT: Philip Desjardins, Center for Devices and Radiological Health, Food and Drug Administration, 10903 New Hampshire Ave., Bldg. 66, rm. 5452, Silver Spring, MD 20993–0002, 301–796–5678.

SUPPLEMENTARY INFORMATION:

I. Background

In September 2009, CDRH convened an internal 510(k) Working Group as part of a two-pronged, comprehensive assessment of the 510(k) process. The first prong of this evaluation consisted of an internal evaluation of the 510(k) process, resulting in the publication of the CDRH preliminary internal evaluation entitled: ''510(k) Working Group Preliminary Report and Recommendations'' (*http://www.fda.gov/downloads/AboutFDA/CentersOffices/CDRH/CDRHReports/UCM220784.pdf*). This preliminary report was intended to communicate preliminary findings and recommendations regarding the 510(k) program and actions CDRH might take to address identified areas of concern. The report was issued on August 5, 2010 (75 FR 47307). After reviewing public comment, CDRH issued a plan of action for implementation of the previously announced recommendations on January 19, 2011 (*http://www.fda.gov/downloads/AboutFDA/CentersOffices/CDRH/CDRHReports/UCM239450.pdf*).

The second prong of the comprehensive assessment of the 510(k) process was an independent study by the IOM. At the request of FDA, IOM has evaluated the 510(k) clearance process and made recommendations aimed at protecting the health of the public and making available a mechanism to achieve timely access of medial devices to the market. On July 29, 2011, IOM released the report ''Medical Devices and the Public's Health, The FDA 510(k) Clearance Process at 35 Years.'' While FDA has not yet had the opportunity to fully evaluate this report, the agency does recognize the strong public interest in the comprehensive assessment of the 510(k) process and the IOM report. For this reason, FDA is opening a public docket and requesting public comment on the report. The establishment of this public docket does not signify agency endorsement or concurrence with any of the conclusions or recommendations contained within the report. FDA may, in the future, take additional measures to solicit public input in the report and specific recommendations contained therein. FDA will not adopt any of the recommendations contained in the report before the close of this comment period.

II. Comments

Interested persons may submit to the Division of Dockets Management (see **ADDRESSES**) either electronic or written comments regarding this document. It is only necessary to send one set of comments. It is no longer necessary to send two copies of mailed comments. Identify comments with the docket number found in brackets in the heading of this document. Received comments may be seen in the Division of Dockets Management between 9 a.m. and 4 p.m., Monday through Friday.

III. Electronic Access

The IOM report entitled: ''Medical Devices and the Public's Health, The FDA 510(k) Clearance Process at 35 Years'' can be obtained from the IOM Web site at *http://www.iom.edu/Activities/PublicHealth/510KProcess.aspx.*

Dated: July 26, 2011.

Nancy K. Stade,

Deputy Director for Policy, Center for Devices and Radiological Health.

[FR Doc. 2011–19353 Filed 7–29–11; 8:45 am]

BILLING CODE 4160–01–P

DEPARTMENT OF HEALTH AND HUMAN SERVICES

Food and Drug Administration

[Docket No. FDA–2011–N–0542]

Medical Device User Fee Rates for Fiscal Year 2012

AGENCY: Food and Drug Administration, HHS.

ACTION: Notice.

SUMMARY: The Food and Drug Administration (FDA) is announcing the fee rates and payment procedures for medical device user fees for fiscal year (FY) 2012. The Federal Food, Drug, and Cosmetic Act (the FD&C Act), as amended by the Medical Device User Fee Amendments of 2007 (title II of the Food and Drug Administration Amendments Act of 2007 (FDAAA)), authorizes FDA to collect user fees for certain medical device submissions, and annual fees for certain periodic reports and for certain establishments subject to registration. The FY 2012 fee rates are provided in this document. These fees apply from October 1, 2011, through September 30, 2012. To avoid delay in the review of your application, you should pay the fee before or at the time you submit your application to FDA. The fee you must pay is the fee that is in effect on the later of the date that your application is received by FDA or the date your fee payment is received. In order to pay a reduced small business fee, you must qualify as a small business before you make your submission to FDA; if you do not qualify as a small business before you make your submission to FDA, you will be required to pay the higher standard fee. This document provides information on how the fees for FY 2012 were determined, the payment procedures you should follow, and how you may qualify for reduced small business fees.

FOR FURTHER INFORMATION CONTACT: *For information on the Medical Device User Fee and Modernization Act (MDUFMA):* visit FDA's Web site, *http://www.fda.gov/MedicalDevices/DeviceRegulationandGuidance/Overview/MedicalDeviceUserFeeandModernizationActMDUFMA/default.htm.*

For questions relating to this notice: Contact David Miller, Office of Financial Management (HFA–100), Food and Drug Administration, 1350 Piccard Dr., Rockville, MD 20850, 301–796–7103.

SUPPLEMENTARY INFORMATION:

I. Background

Section 738 of the FD&C Act (21 U.S.C. 379j) establishes fees for certain medical device applications, submissions, supplements, and notices (for simplicity, this document refers to these collectively as ''submissions''); for periodic reporting on class III devices; and for the registration of certain establishments. Under statutorily-defined conditions, a qualified applicant may receive a fee waiver or may pay a lower small business fee. (See 21 U.S.C. 379j(d) and (e)).

Under the FD&C Act, the fee rate for each type of submission is set at a specified percentage of the standard fee for a premarket application (a premarket application is a premarket approval application (PMA), a product development protocol (PDP), or a biologics license application (BLA)). The FD&C Act specifies the standard fee for a premarket application for each year from FY 2008 through FY 2012; however, the standard fee for a premarket application received by FDA during FY 2012, which is set in the statute ($256,384), is adjusted in accordance with the offset provisions of the FD&C Act. Using this adjusted fee rate for FY 2012 as a starting point, this document establishes FY 2012 fee rates for other types of submissions, and for periodic reporting, by applying criteria specified in the FD&C Act.

The FD&C Act specifies the annual fee for establishment registration for each year from FY 2008 through FY 2012; the registration fee for FY 2012 is $2,364, which is also adjusted in accordance with the offset provisions of the FD&C Act. There is no reduction in the registration fee for small businesses. An establishment must pay the registration fee if it is any of the following types of establishment:

- Manufacturer—An establishment that makes by any means any article that is a device, including an establishment that sterilizes or otherwise makes such article for or on behalf of a specification developer or any other person.
- Single-Use Device Reprocessor—An establishment that performs additional processing and manufacturing operations on a single-use device that has previously been used on a patient.
- Specification Developer—An establishment that develops specifications for a device that is distributed under the establishment's name but which performs no manufacturing, including an establishment that, in addition to developing specifications, also arranges for the manufacturing of devices labeled with another establishment's name by a contract manufacturer.

II. Offsetting Fee Amounts for Collections in Excess of Appropriations in FY 2008 through FY 2011

Under the offset provision of the FD&C Act (see section 739(h)(4) (21 U.S.C. 379j–11(h)(4))), if the cumulative amount of fees collected during FY 2008 through FY 2010, together with the estimated amount to be collected in FY 2011, exceeds the aggregate amounts specified to be appropriated in these four FYs in section 739(h)(3) of the FD&C Act, the aggregate amount in excess shall be credited to the appropriation account of FDA and subtracted from the amount of fees that would otherwise be collected in FY 2012. Table 1 of this document presents the amount of MDUFMA fees collected during FY 2008 through FY 2010 (actuals), and the amount estimated to be collected in FY 2011, and compares those amounts with the fees specified to be appropriated in these four FYs in section 739(h)(3) of the FD&C Act.

TABLE 1—STATEMENT OF FEES APPROPRIATED, FEES COLLECTED, AND DIFFERENCES AS OF SEPTEMBER 30, 2010

Fiscal year	Fees appropriated	Fees collected	Difference
2008 Actual	$48,431,000	$49,314,691	$883,691
2009 Actual	52,547,000	59,731,482	7,184,482
2010 Actual	57,014,000	66,949,587	9,935,587
2011 Estimate	61,860,000	61,860,000	0
Cumulative Total			18,003,760
Unearned Revenue Included in Above Amount			8,491,930
Excess Collections Less Unearned Revenue (Offset Amount)			9,511,830

The total amount FDA expects to have collected in excess of appropriations by the end of FY 2011 is $18,003,760. However, of that amount, a total of $8,491,930 represents unearned revenue—primarily fees paid for applications that have not yet been received. The unearned revenue is held in reserve either to refund, if no application is submitted, or to apply toward the future FY when the application is received. The net of these two figures, $9,511,830, is the amount that FDA has received in excess of appropriations that is available for obligation, and the amount by which fee revenue will be offset in FY 2012.

For FY 2012, the statute authorizes $67,118,000 in user fees (see section 738(h)(3)(E)). In order to determine the revised collection amount, we deduct the net excess collection amount of $9,511,830 from $67,118,000, and the revised revenue target for FY 2012 becomes $57,606,170. Stated as a percent, this is 85.8281 percent of the original revenue target for FY 2012. Accordingly, if we multiply this percentage by the revenue amounts for the two fees set in statute, $256,384 for a Premarket Application fee and $2,364 for an Establishment Registration Fee (see 21 U.S.C. 379j(b)), the reduced fees for FY 2012 are $220,050 for a premarket application fee and $2,029 for the annual establishment registration fee.

It is important to note that the appropriation for FY 2012 still must be $67,118,000 as specified in the statute, so that the $9,511,830 in user fees collected in prior years is appropriated and available for obligation.

III. Fees for FY 2012

Under the FD&C Act, all submission fees and the periodic reporting fee are set as a percent of the standard (full) fee for a premarket application (see 21 U.S.C. 379j(a)(2)(A)), and the offset fee for the standard premarket application, including a BLA, a premarket report, and an efficacy supplement, for FY 2012. As calculated previously, the FY 2012 premarket application fee is $220,050. This is referred to as the ''base fee.'' The fees set by reference to the base fee are as follows:

- For a panel-track supplement, 75 percent of the base fee;

• For a 180-day supplement, 15 percent of the base fee;

• For a real-time supplement, 7 percent of the base fee;

• For a 30-day notice, 1.6 percent of the base fee;

• For a 510(k) premarket notification, 1.84 percent of the base fee;

• For a 513(g) (21 U.S.C. 360(c)(g)) request for classification information, 1.35 percent of the base fee; and

• For an annual fee for periodic reporting concerning a class III device, 3.5 percent of the base fee.

For all submissions other than a 510(k) premarket notification, a 30-day notice, and a 513(g) request for classification information, the small business fee is 25 percent of the standard (full) fee. (See 21 U.S.C. 379j(d)(2)(C).) For a 510(k) premarket notification submission, a 30-day notice, and a 513(g) request for classification information, the small business fee is 50 percent of the standard (full) fee. (See 21 U.S.C. 379j(d)(2)(C) and 379j(e)(2)(C).)

The annual fee for establishment registration, after reduction as calculated in the previous section, is $2,029 in FY 2012. There is no small business rate for the annual establishment registration fee; all establishments pay the same fee. The statute authorizes increases in the annual establishment fee for FY 2011 and subsequent years if the estimated number of establishments submitting fees for FY 2009 is fewer than 12,250. (See 21 U.S.C. 379j(c)(2)(A).) The number of establishments submitting fees in FY 2009 was in excess of 12,250, so no establishment fee increase is warranted under this provision of the statute.

Table 2 of this document sets out the FY 2012 rates for all medical device fees.

TABLE 2—MEDICAL DEVICE FEES FOR FY 2012

Application fee type	Standard Fee, as a Percent of the standard fee for a premarket application	FY 2012 standard fee	FY 2012 small business fee
Premarket application (a PMA submitted under section 515(c)(1) of the FD&C Act (21 U.S.C. 360e(c)(1)), a PDP submitted under section 515(f) of the FD&C Act, or a BLA submitted under section 351 of the Public Health Service (PHS) Act (42 U.S.C. 262)).	Set in statute at $256,382, but offset by multiplying by 85.8281 percent.	$220,050	$55,013
Premarket report (submitted under section 515(c)(2) of the FD&C Act)	100%	220,050	55,013
Efficacy supplement (to an approved BLA under section 351 of the PHS Act).	100%	220,050	55,013
Panel-track supplement	75%	165,038	41,259
180-day supplement	15%	33,008	8,252
Real-time supplement	7%	15,404	3,851
510(k) premarket notification submission	1.84%	4,049	2,024
30-day notice	1.6%	3,521	1,760
513(g) (21 U.S.C. 360c(g)) request for classification information	1.35%	2,971	1,485
Annual Fee Type			
Annual fee for periodic reporting on a class III device	3.5%	7,702	1,925
Annual establishment registration fee (to be paid by each establishment that is a manufacturer, a single-use device reprocessor, or a specification developer, as defined by 21 U.S.C. 379i(13)).	Set in statute at $2,364, but offset by multiplying by 85.8281 percent.	2,029	2,029

IV. How to Qualify as a Small Business for Purposes of Medical Device Fees

If your business has gross receipts or sales of no more than $100 million for the most recent tax year, you may qualify for reduced small business fees. If your business has gross sales or receipts of no more than $30 million, you may also qualify for a waiver of the fee for your first premarket application (PMA, PDP, or BLA) or premarket report. You must include the gross receipts or sales of all of your affiliates along with your own gross receipts or sales when determining whether you meet the $100 million or $30 million threshold. In order to pay the small business fee rate for a submission, or to receive a waiver of the fee for your first premarket application or premarket report, you should submit the materials showing you qualify as a small business 60 days before you send your submission to FDA. If you make a submission before FDA finds that you qualify as a small business, you must pay the standard fee for that submission.

If your business qualified as a small business for FY 2011, your status as a small business will expire at the close of business on September 30, 2011. You must re-qualify for FY 2012 in order to pay small business fees during FY 2012.

If you are a domestic (U.S.) business, and wish to qualify as a small business for FY 2012, you must submit the following to FDA:

1. A completed FY 2012 MDUFMA Small Business Qualification Certification (Form FDA 3602). This form is provided in FDA's guidance document, ''FY 2012 Medical Device User Fee Small Business Qualification and Certification,'' available on FDA's Web site at *http://www.fda.gov/MedicalDevices/DeviceRegulationandGuidance/Overview/MedicalDeviceUserFeeandModernizationActMDUFMA/default.htm.* This form is not available separate from the guidance document.

2. A certified copy of your Federal (U.S.) Income Tax Return for the most recent tax year. The most recent tax year will be 2011, except:

• If you submit your FY 2012 MDUFMA Small Business Qualification before April 15, 2012, and you have not yet filed your return for 2011, you may use tax year 2010.

• If you submit your FY 2012 MDUFMA Small Business Qualification on or after April 15, 2012, and have not yet filed your 2011 return because you obtained an extension, you may submit your most-recent return filed prior to the extension.

3. For each of your affiliates, either:

• If the affiliate is a domestic (U.S.) business, a certified copy of the affiliate's Federal (U.S.) income tax return for the most recent tax year, or

• If the affiliate is a foreign business and cannot submit a Federal (U.S.) Income Tax Return, a National Taxing Authority Certification completed by, and bearing the official seal of, the

National Taxing Authority of the country in which the firm is headquartered. The National Taxing Authority is the foreign equivalent of the U.S. Internal Revenue Service. This certification must show the amount of gross receipts or sales for the most recent tax year, in both U.S. dollars and the local currency of the country, the exchange rate used in converting the local currency to U.S. dollars, and the dates of the gross receipts or sales collected. The applicant should also submit a statement signed by the head of the applicant's firm or by its chief financial officer that the applicant has submitted certifications for all of its affiliates, identifying the name of each affiliate, or that the applicant has no affiliates.

If you are a foreign business, and wish to qualify as a small business for FY 2012, you must submit the following:

1. A completed FY 2012 MDUFMA Foreign Small Business Qualification Certification (Form FDA 3602A). This form is provided in FDA's guidance document, ''FY 2012 Medical Device User Fee Small Business Qualification and Certification,'' available on FDA's Web site at *http://www.fda.gov/cdrh/mdufma.* This form is not available separate from the guidance document.

2. A National Taxing Authority Certification, completed by, and bearing the official seal of, the National Taxing Authority of the country in which the firm is headquartered. This Certification must show the amount of gross receipts or sales for the most recent tax year, in both U.S. dollars and the local currency of the country, the exchange rate used in converting the local currency to U.S. dollars, and the dates of the gross receipts or sales collected.

3. For each of your affiliates, either:

- If the affiliate is a domestic (U.S.) business, a certified copy of the affiliate's Federal (U.S.) Income Tax Return for the most recent tax year (2010 or later), or
- If the affiliate is a foreign business and cannot submit a Federal (U.S.) Income Tax Return, a National Taxing Authority Certification completed by, and bearing the official seal of, the National Taxing Authority of the country in which the firm is headquartered. The National Taxing Authority is the foreign equivalent of the U.S. Internal Revenue Service. This certification must show the amount of gross receipts or sales for the most recent tax year, in both U.S. dollars and the local currency of the country, the exchange rate used in converting the local currency to U.S. dollars, and the dates for the gross receipts or sales collected. The applicant should also submit a statement signed by the head of the applicant's firm or by its chief financial officer that the applicant has submitted certifications for all of its affiliates, identifying the name of each affiliate, or that the applicant has no affiliates.

V. Procedures for Paying Application Fees

If your application or submission is subject to a fee and your payment is received by FDA from October 1, 2011, through September 30, 2012, you must pay the fee in effect for FY 2012. The later of the date that the application is received in the reviewing center's document room or the date that the check is received by U.S. Bank determines whether the fee rates for FY 2011 or FY 2012 apply. FDA must receive the correct fee at the time that an application is submitted, or the application will not be accepted for filing or review.

FDA requests that you follow the steps in the paragraphs that follow when submitting a medical device application subject to a fee to ensure that FDA links the fee with the correct application. (**Note:** In no case should the check for the fee be submitted to FDA with the application.)

A. Step One—Secure a Payment Identification Number (PIN) and Medical Device User Fee Cover Sheet From FDA Before Submitting Either the Application or the Payment. Both the FY 2011 and FY 2012 Fee Rates Will Be Available on the User Fee Web Site Beginning on the Date of Publication of This Document, and Only the FY 2012 Rates Will Appear After September 30, 2011)

Log on to the MDUFMA Web site at: *http://www.fda.gov/MedicalDevices/DeviceRegulationandGuidance/Overview/MedicalDeviceUserFeeandModernizationActMDUFMA/default.htm* and under the MDUFMA Forms heading, click on the link ''Create a User Fee Cover Sheet.'' Complete the Medical Device User Fee cover sheet. Be sure you choose the correct application submission date range (two choices will be offered until October 1, 2011. One choice is for applications that will be received on or before September 30, 2011, which are subject to FY 2011 fee rates. A second choice is for applications that will be received on or after October 1, 2011, which are subject to FY 2012 fee rates.) After completing data entry, print a copy of the Medical Device User Fee cover sheet and note the unique PIN located in the upper right-hand corner of the printed cover sheet.

B. Step Two—Electronically Transmit a Copy of the Printed Cover Sheet With the PIN to FDA's Office of Financial Management

Once you are satisfied that the data on the cover sheet is accurate, electronically transmit that data to FDA according to instructions on the screen. Because electronic transmission is possible, applicants are required to set up a user account and use passwords to assure data security in the creation and electronic submission of cover sheets.

C. Step Three—Submit Payment for the Completed Medical Device User Fee Cover Sheet as Described in This Section, Depending on the Method You Will Use to Make Payment

1. If paying with a paper check:

- All paper checks must be in U.S. currency from a U.S. bank and made payable to the Food and Drug Administration. (FDA's tax identification number is 53–0196965, should your accounting department need this information.)
- Please write your application's unique PIN, from the upper right-hand corner of your completed Medical Device User Fee cover sheet, on your check.
- Mail the paper check and a copy of the completed cover sheet to: Food and Drug Administration, P.O. Box 956733, St. Louis, MO, 63195–6733. (Please note that this address is for payments of application and annual report fees only and is not to be used for payment of annual establishment registration fees.)

If you prefer to send a check by a courier (such as Federal Express (FEDEX), DHL, United Parcel Service (UPS), etc.), the courier may deliver the check to: U.S. Bank, Attn: Government Lockbox 956733, 1005 Convention Plaza, St. Louis, MO 63101. (**Note:** This address is for courier delivery only. Contact the U.S. Bank at 314–418–4821 if you have any questions concerning courier delivery.)

FDA records the official application receipt date as the later of the following: (1) The date the application was received by FDA or (2) the date U.S. Bank receives the payment. It is helpful if the fee arrives at the bank at least 1 day before the application arrives at FDA. U.S. Bank is required to notify FDA within 1 working day, using the PIN described previously in this document.

2. If paying with a credit card or electronic check (Automated Clearing House (ACH)):

FDA has partnered with the U.S. Department of the Treasury to utilize Pay.gov, a Web based payment system,

for online electronic payment. You may make a payment via electronic check or credit card after submitting your coversheet. To pay online, select the ''Pay Now'' button. Credit card transactions for cover sheets are limited to $5,000.

3. If paying with a wire transfer:

• Please include your application's unique PIN, from the upper right-hand corner of your completed Medical Device User Fee cover sheet, in your wire transfer. Without the PIN, your payment may not be applied to your cover sheet and review of your application will be delayed.

• The originating financial institution may charge a wire transfer fee between $15 and $35. Please ask your financial institution about the fee and include it with your payment to ensure that your cover sheet is fully paid.

Use the following account information when sending a wire transfer: New York Federal Reserve Bank, U.S. Department of Treasury, TREAS NYC, 33 Liberty St, New York, NY 10045, Acct. No. 75060099, Routing No. 021030004, SWIFT: FRNYUS33, Beneficiary: FDA, 1350 Piccard Dr., Rockville, MD 20850.

D. Step Four—Submit Your Application to FDA With a Copy of the Completed Medical Device User Fee Cover Sheet

Please submit your application and a copy of the completed Medical Device User Fee cover sheet to one of the following addresses:

1. Medical device applications should be submitted to: Food and Drug Administration, Center for Devices and Radiological Health, Document Mail Center— WO66, rm. 0609, 10903 New Hampshire Ave., Silver Spring, MD 20993–0002.

2. Biologic applications should be sent to: Food and Drug Administration, Center for Biologics Evaluation and Research, Document Control Center (HFM–99), suite 200N, 1401 Rockville Pike, Rockville, MD 20852–1448.

VI. Procedures for Paying the Annual Fee for Periodic Reporting

As of FY 2011, you are no longer able to create a cover sheet and obtain a PIN to pay the MDUFMA Annual Fee for Periodic Reporting. Instead, you will be invoiced at the end of the quarter in which your PMA Periodic Report is due. Invoices will be sent based on the details included on your PMA file; you are responsible to ensure your billing information are kept up-to-date (you can update your contact for the PMA by submitting an amendment).

1. If paying with a paper check:

• All paper checks must be in U.S. currency from a U.S. bank and made payable to the Food and Drug Administration. (FDA's tax identification number is 53–0196965, should your accounting department need this information.)

• Please write your invoice number.

• Mail the paper check and a copy of invoice to: Food and Drug Administration, P.O. Box 956733, St. Louis, MO, 63195–6733. (Please note that this address is for payments of application and annual report fees only and is not to be used for payment of annual establishment registration fees.)

If you prefer to send a check by a courier (such as Federal Express (FEDEX), DHL, United Parcel Service (UPS), etc.), the courier may deliver the check to: U.S. Bank, Attn: Government Lockbox 956733, 1005 Convention Plaza, St. Louis, MO 63101. (**Note:** This address is for courier delivery only. Contact the U.S. Bank at 314–418–4821 if you have any questions concerning courier delivery.)

2. If paying with a wire transfer:

• Please include your invoice number in your wire transfer. Without the invoice number, your payment may not be applied and you may be referred to collections.

• The originating financial institution may charge a wire transfer fee between $15 and $35. Please ask your financial institution about the fee and include it with your payment to ensure that your invoice is fully paid.

Use the following account information when sending a wire transfer: New York Federal Reserve Bank, U.S. Department of Treasury, TREAS NYC, 33 Liberty St., New York, NY 10045, Acct. No. 75060099, Routing No. 021030004, SWIFT: FRNYUS33, Beneficiary: FDA, 1350 Piccard Dr., Rockville, MD 20850.

VII. Procedures for Paying Annual Establishment Fees

In order to pay the annual establishment fee, firms must access the Device Facility User Fee (DFUF) Web site at *https://userfees.fda.gov/OA_HTML/furls.jsp*. (FDA has verified the Web site address, but FDA is not responsible for any subsequent changes to the Web site after this document publishes in the **Federal Register**). The Web site includes a short interactive questionnaire to help you ascertain whether an annual registration payment is required for your type of facility. If you are required to pay an annual establishment registration fee, you must pay for each establishment prior to registration. You will create a DFUF order and you will be issued a PIN once you place your order. After payment has been processed, you will be issued a payment confirmation number (PCN). You will not be able to register your establishment if you do not have a PIN and a PCN. An establishment required to pay an annual establishment registration fee is not legally registered in FY 2012 until it has completed the steps in the paragraphs that follow to register and pay any applicable fee. (See 21 U.S.C. 379j(f)(2).)

Companies that do not manufacture any product other than a licensed biologic are required to register in the Blood Establishment Registration (BER) system. FDA's Center for Biologics Evaluation and Research (CBER) will send establishment registration fee invoices annually to these companies.

A. Step One—Submit a Device Facility User Fee (DFUF) Order With a PIN From FDA Before Registering or Submitting Payment

To submit a DFUF order, you must create or have previously created a user account and password through the User Fee Web site listed previously in this section. After creating a user name and password, log into the Establishment Registration User Fee 2012 store. Complete the DFUF order by entering the number of establishments you are registering that require payment. Once you are satisfied that the data on the order is accurate, electronically transmit that data to FDA according to instructions on the screen. Print a copy of the final DFUF order and note the unique PIN located in the upper right-hand corner of the printed order.

B. Step Two—Pay For Your Device Facility User Fee Order

Unless paying by credit card, all payments must be in U. S. currency and drawn on a U.S. bank.

1. If paying with a credit card or electronic check (ACH):

The DFUF order will include payment information, including details on how you can pay online using a credit card or electronic checks. Follow the instructions provided to make an electronic payment.

2. If paying with a paper check:

If you prefer not to pay online, you may pay by a check, in U.S. dollars and drawn on a U.S. bank, mailed to: U.S. Bank, Attn: Government Lockbox 979108, St. Louis, MO 63197–9000. (**Note:** This address is different from the address for payments of application and annual report fees and is to be used only for payment of annual establishment registration fees.)

If a check is sent by a courier that requests a street address, the courier can

deliver the check to: U.S. Bank, Attn: Government Lockbox 979108, 1005 Convention Plaza, St. Louis, MO 63101. (**Note:** This U.S. Bank address is for courier delivery only; do not send mail to this address.)

Please make sure that both of the following are written on your check: (1) The FDA lockbox number (Lockbox 979108) and (2) the PIN that is printed on your order. A copy of your printed order should also be mailed along with your check. FDA's tax identification number is 53–0196965.

3. If paying with a wire transfer:

Wire transfers may also be used to pay annual establishment fees. To send a wire transfer, please read and comply with the following information:

- Include your order's unique PIN, from the upper right-hand corner of your completed Medical Device User Fee order, in your wire transfer. Without the PIN your payment may not be applied to your facility and your registration will be delayed.
- The originating financial institution usually charges a wire transfer fee between $15 and $35. Please ask your financial institution about the fee and include it with your payment to ensure that your order is fully paid. Use the following account information when sending a wire transfer: New York Federal Reserve Bank, U.S. Dept of Treasury, TREAS NYC, 33 Liberty St., New York, NY 10045, Acct. No. 75060099, Routing No. 021030004, SWIFT: FRNYUS33, Beneficiary: FDA, 5600 Fishers Lane, Rockville, MD 20857.

C. Step Three—Complete the Information Online To Update Your Establishment's Annual Registration for FY 2012, or to Register a New Establishment for FY 2012

Go to CDRH's Web site at *http://www.fda.gov/MedicalDevices/DeviceRegulationandGuidance/HowtoMarketYourDevice/RegistrationandListing/default.htm* and click the ''Access Electronic Registration'' link on the left of the page. This opens up a new page with important information about the FDA Unified Registration and Listing System (FURLS). After reading this information, click on the link (Access Electronic Registration) at the bottom of the page. This link takes you to an FDA Industry Systems page with tutorials that demonstrate how to create a new FURLS user account if your establishment did not create an account in FY 2010 or FY 2011. Biologics manufacturers should register in the BER system at *http://www.fda.gov/BiologicsBloodVaccines/GuidanceComplianceRegulatoryInformation/EstablishmentRegistration/BloodEstablishmentRegistration/default.htm.*

Enter your existing account ID and password to log into FURLS. From the FURLS/FDA Industry Systems menu, click on the Device Registration and Listing Module (DRLM) of FURLS button. New establishments will need to register and existing establishments will update their annual registration using selections on the DRLM menu. Once you choose to register or update your annual registration, the system will prompt you through the entry of information about your establishment and your devices. If you have any problems with this process, e-mail: *reglist@cdrh.fda.gov* or call 301–796–7400 for assistance. (**Note:** this e-mail address and this telephone number are for assistance with establishment registration only, and not for any other aspects of medical device user fees.) Problems with BER should be directed to *bloodregis@fda.hhs.gov* or call 301–827–3546.

D. Step Four—Enter Your DFUF Order PIN and PCN

After completing your annual or initial registration and device listing, you will be prompted to enter your DFUF order PIN and PCN, when applicable. This process does not apply to licensed biologic devices. CBER will send invoices for payment of the establishment registration fee to companies who only manufacture licensed biologics devices. Fees are only required for those establishments defined in section I of this document.

Dated: July 26, 2011.

Leslie Kux,

Acting Assistant Commissioner for Policy.

[FR Doc. 2011–19335 Filed 7–29–11; 8:45 am]

BILLING CODE 4160–01–P

DEPARTMENT OF HEALTH AND HUMAN SERVICES

Food and Drug Administration

[Docket No. FDA–2011–N–0559]

Prescription Drug User Fee Rates for Fiscal Year 2012

AGENCY: Food and Drug Administration, HHS.

ACTION: Notice.

SUMMARY: The Food and Drug Administration (FDA) is announcing the rates for prescription drug user fees for fiscal year (FY) 2012. The Federal Food, Drug, and Cosmetic Act (the FD&C Act), as amended by the Prescription Drug User Fee Amendments of 2007 (Title 1 of the Food and Drug Administration Amendments Act of 2007 (FDAAA)) (PDUFA IV), authorizes FDA to collect user fees for certain applications for approval of drug and biological products, on establishments where the products are made, and on such products. Base revenue amounts to be generated from PDUFA fees were established by PDUFA IV, with provisions for certain adjustments. Fee revenue amounts for applications, establishments, and products are to be established each year by FDA so that one-third of the PDUFA fee revenues FDA collects each year will be generated from each of these categories. This document establishes fee rates for FY 2012 for application fees for an application requiring clinical data ($1,841,500), for an application not requiring clinical data or a supplement requiring clinical data ($920,750), for establishment fees ($520,100), and for product fees ($98,970). These fees are effective on October 1, 2011, and will remain in effect through September 30, 2012. For applications and supplements that are submitted on or after October 1, 2011, the new fee schedule must be used. Invoices for establishment and product fees for FY 2012 will be issued in August 2011, using the new fee schedule.

FOR FURTHER INFORMATION CONTACT: David Miller, Office of Financial Management (HFA–100), Food and Drug Administration, 1350 Picard Dr., PI50, Rm. 210J, Rockville, MD 20850, 301–796–7103.

SUPPLEMENTARY INFORMATION:

I. Background

Sections 735 and 736 of the FD&C Act (21 U.S.C. 379g and 379h, respectively), establish three different kinds of user fees. Fees are assessed on the following: (1) Certain types of applications and supplements for approval of drug and biological products, (2) certain establishments where such products are made, and (3) certain products (section 736(a) of the FD&C Act). When certain conditions are met, FDA may waive or reduce fees (section 736(d) of the FD&C Act).

For FY 2008 through FY 2012, the base revenue amounts for the total revenues from all PDUFA fees are established by PDUFA IV. The base revenue amount for FY 2008 is to be adjusted for workload, and that adjusted amount becomes the base amount for the remaining 4 FYs. That adjusted base revenue amount is increased for drug safety enhancements by $10,000,000 in each of the subsequent 4 FYs, and the increased total is further adjusted each year for inflation and workload. Fees for

applications, establishments, and products are to be established each year by FDA so that revenues from each category will provide one-third of the total revenue to be collected each year.

This document uses the fee base revenue amount for FY 2008 published in the **Federal Register** of October 12, 2007 (72 FR 58103) (the October 2007 notice); adjusts it for the FY 2009, FY 2010, FY 2011, and FY 2012 drug safety increases (see section 736(b)(4) of the FD&C Act), for inflation, and for workload, for excess collections through FY 2011, and for a final year adjustment; and then establishes the application, establishment, and product fees for FY 2012. These fees are effective on October 1, 2011, and will remain in effect through September 30, 2012.

II. Fee Revenue Amount for FY 2012

The total fee revenue amount for FY 2012 is $702,172,000, based on the fee revenue amount specified in the statute, including additional fee funding for drug safety and adjustments for inflation, changes in workload, offset for excess collections and the final year adjustment. The statutory amount and a one-time base adjustment are described in sections II.A and II.B of this document. The adjustment for inflation is described in section II.C of this document, and the adjustment for changes in workload in section II.D of this document. The adjustment for estimated excess collections through FY 2012 is described in section III of this document, and the final year adjustment is described in section IV of this document.

A. FY 2012 Statutory Fee Revenue Amounts Before Adjustments

PDUFA IV specifies that the fee revenue amount before adjustments for FY 2012 for all fees is $457,783,000 ($392,783,000 specified in section 736(b)(1) of the FD&C Act plus an additional $65,000,000 for drug safety in FY 2012 specified in section 736(b)(4)).

B. Base Adjustment to Statutory Fee Revenue Amount

The statute also specifies that $354,893,000 of the base amount is to be further adjusted for workload increases through FY 2007 (see section 736(b)(1)(B) of the FD&C Act). The workload adjustment on this amount is to be made in accordance with the workload adjustment provisions that were in effect for FY 2007, except that the adjustment for investigational new drug (IND) workload is based on the number of INDs with a submission in the previous 12 months rather than on the number of new commercial INDs submitted in the same 12-month period. This adjustment was explained in detail in the October 2007 notice. Increasing the statutorily specified amount of $354,893,000 by the specified workload adjuster (11.73 percent) results in an increase of $41,629,000, rounded to the nearest thousand. Adding this amount to the $457,783,000 statutorily specified amount from section II.A of this document, results in a total adjusted PDUFA IV base revenue amount of $499,412,000, before further adjustment for inflation and changes in workload after FY 2007.

C. Inflation Adjustment to FY 2012 Fee Revenue Amount

PDUFA IV provides that fee revenue amounts for each FY after FY 2008 shall be adjusted for inflation. The adjustment must reflect the greater of the following amounts: (1) The total percentage change that occurred in the Consumer Price Index (CPI) (all items; U.S. city average) during the 12-month period ending June 30 preceding the FY for which fees are being set; (2) the total percentage pay change for the previous FY for Federal employees stationed in the Washington, DC metropolitan area; or (3) the average annual change in cost, per FDA full time equivalent (FTE), of all personnel compensation and benefits paid for the first 5 of the previous 6 FYs. PDUFA IV provides for this annual adjustment to be cumulative and compounded annually after FY 2008 (see section 736(c)(1) of the FD&C Act).

The first factor is the CPI increase for the 12-month period ending in June 2011. The CPI for June 2011 was 225.722 and the CPI for June 2010 was 217.965. (These CPI figures are available on the Bureau of Labor Statistics (BLS) Web site at *http://data.bls.gov/cgi-bin/surveymost?bls* by checking the first box under ''Price Indexes'' and then clicking ''Retrieve Data'' at the bottom of the page. FDA has verified the Web site address, but FDA is not responsible for any subsequent changes to the Web site after this document publishes in the **Federal Register.**) The CPI for June 2011 is 3.559 percent higher than the CPI for the previous 12-month period.

The second factor is the increase in pay for the previous FY (FY 2011 in this case) for Federal employees stationed in the Washington, DC metropolitan area. This figure is published by the Office of Personnel Management (OPM), and found on their Web site at *http://www.opm.gov/oca/11tables/html/dcb.asp* above the salary table. (FDA has verified the Web site address, but FDA is not responsible for any subsequent changes to the Web site after this document publishes in the **Federal Register.**) For FY 2011 it was 0.00 percent.

The third factor is the average change in FDA cost for compensation and benefits per FTE over the previous 5 of the most recent 6 FYs (FY 2006 through FY 2010). The data on total compensation paid and numbers of FTE paid, from which the average cost per FTE can be derived, are published in FDA's Justification of Estimates for Appropriations Committees. Table 1 of this document summarizes that actual cost and FTE use data for the specified FYs, and provides the percent change from the previous FY and the average percent change over the most 5 recent FYs, which is 3.72 percent.

TABLE 1—FDA PERSONNEL COMPENSATION AND BENEFITS (PC&B) EACH YEAR AND PERCENT CHANGE

	FY2006	FY2007	FY2008	FY2009	FY2010	Annual average increase for latest 5 years
Total PC&B	$1,114,704,000	$1,144,369,000	$1,215,627,000	$1,464,445,000	$1,634,108,000	.....
Total FTE	9,698	9,569	9,811	11,413	12,256	.....
PC&B per FTE	$114,942	$119,591	$123,905	$128,314	$130,457	.....
Percent Change from Previous Year	5.70	4.05	3.61	3.56	1.67	3.72

The inflation increase for FY 2012 is 3.72 percent. This is the greater of the CPI change during the 12-month period ending June 30 preceding the FY for which fees are being set (3.559 percent), the increase in pay for the previous FY (FY 2011 in this case) for Federal employees stationed in the Washington, DC metropolitan area (0.00 percent), and

the average annual change in cost, per FDA FTE, of all personnel compensation and benefits paid for the first 5 of the previous 6 FYs (3.72 percent). Because the average change in pay per FTE (3.72 percent) is the highest of the three factors, it becomes the inflation adjustment for total fee revenue for FY 2012.

The inflation adjustment for FY 2009 was 5.64 percent. This is the greater of the CPI increase during the 12-month period ending June 30 preceding the FY for which fees were being set (June 30, 2008, which was 5.05 percent), the increase in pay for FY 2008 for Federal employees stationed in Washington, DC (4.49 percent), or the average annual change in cost, per FDA FTE, of all personnel compensation and benefits paid for the first 5 of the previous 6 FYs (5.64 percent).

The inflation adjustment for FY 2010 was 5.54 percent. This is the greater of the CPI increase during the 12-month period ending June 30 preceding the FY for which fees were being set (June 30, 2009) (negative 1.43 percent), the increase in pay for FY 2009 for Federal employees stationed in Washington, DC (4.78 percent), or the average annual change in cost, per FDA FTE, of all personnel compensation and benefits paid for the first 5 of the previous 6 FYs (5.54 percent).

The inflation adjustment for FY 2011 was 4.53 percent. This is the greater of the CPI increase during the 12-month period ending June 30 preceding the FY for which fees were being set (June 30, 2010) (1.053 percent), the increase in pay for FY 2010 for Federal employees stationed in Washington, DC (2.42 percent), or the average annual change in cost, per FDA FTE, of all personnel compensation and benefits paid for the first 5 of the previous 6 FYs (4.53 percent).

PDUFA IV provides for this inflation adjustment to be cumulative and compounded annually after FY 2008 (see section 736(c)(1) of the FD&C Act). This factor for FY 2012 (3.72 percent) is compounded by adding one to it and then multiplying it by one plus the inflation adjustment factor for FY 2011 (4.53 percent) and by one plus the inflation adjustment factor for FY 2010 (5.54 percent) and by one plus the inflation adjustment factor for FY 2009 (5.64 percent). The result of this multiplication of the inflation factors for the 4 years since FY 2008 (1.0372 times 1.0453 times 1.0554 times 1.0564 percent) becomes the inflation adjustment for FY 2012. This inflation adjustment for FY 2012 is 20.88 percent.

Increasing the FY 2012 fee revenue base of $499,412,000, by 20.88 percent yields an inflation-adjusted fee revenue amount for FY 2012 of $603,689,000, rounded to the nearest thousand dollars, before the application of the FY 2012 workload adjustment.

D. Workload Adjustment to the FY 2012 Inflation Adjusted Fee Revenue Amount

PDUFA IV does not allow FDA to adjust the total revenue amount for workload beginning in FY 2010, unless an independent accounting firm study is complete (see section 736(c)(2)(C) of the FD&C Act). That study, conducted by Deloitte Touche, LLP, was completed on March 31, 2009, and is available online at *http://www.fda.gov/ForIndustry/UserFees/PrescriptionDrugUserFee/ucm164339.htm.* The study found that the adjustment methodology used by FDA reasonably captures changes in workload for reviewing human drug applications under PDUFA IV. Accordingly, FDA continues to use the workload adjustment methodology prescribed in PDUFA IV.

For each fiscal year beginning in FY 2009, PDUFA IV provides that fee revenue amounts, after they have been adjusted for inflation, shall be further adjusted to reflect changes in workload for the process for the review of human drug applications (see section 736(c)(2) of the FD&C Act). PDUFA IV continues the Prescription Drug User Fee Amendments of 2002 (PDUFA III) workload adjustment with modifications, and provides for a new additional adjustment for changes in review activity.

FDA calculated the average number of each of the four types of applications specified in the workload adjustment provision: (1) Human drug applications, (2) active commercial INDs (applications that have at least one submission during the previous 12 months), (3) efficacy supplements, and (4) manufacturing supplements received over the 5-year period that ended on June 30, 2007 (base years), and the average number of each of these types of applications over the most recent 5-year period that ended June 30, 2011.

The calculations are summarized in table 2 of this document. The 5-year averages for each application category are provided in Column 1 (''5–Year Average Base Years 2002–2007'') and Column 2a (''5-Year Average 2007–2011'').

PDUFA IV specifies that FDA make additional adjustments for changes in review activities to human drug applications and active commercial INDs. These adjustments, specified under PDUFA IV, are summarized in columns 2b and 2c in table 2 of this document. The number in the new drug applications/biologics license applications (NDAs/BLAs) line of column 2b of table 2 of this document is the percent by which the average workload for meetings, annual reports, and labeling supplements for NDAs and BLAs has changed from the 5-year period 2002 through 2007, to the 5-year period 2007 through 2011. Likewise, the number in the ''Active commercial INDs'' line of column 2b of table 2 of this document is the percent by which the workload for meetings and special protocol assessments for active commercial INDs has changed from the 5-year period 2002 through 2007, to the 5-year period 2007 through 2011. There is no entry in the last two lines of column 2b because the adjustment for changes in review workload does not apply to the workload for efficacy supplements and manufacturing supplements.

Column 3 of table 2 of this document reflects the percent change in workload from column 1 to column 2c. Column 4 of table 2 of this document shows the weighting factor for each type of application, estimating how much of the total FDA drug review workload was accounted for by each type of application in the table during the most recent 5 years. Column 5 of table 2 of this document is the weighted percent change in each category of workload. This was derived by multiplying the weighting factor in each line in column 4 by the percent change from the base years in column 3. At the bottom right of table 2 of this document is the sum of the values in column 5 that are added, reflecting an increase in workload of 8.12 percent for FY 2012 when compared to the base years.

TABLE 2—WORKLOAD ADJUSTER CALCULATION FOR FY 2012

Application type	Column 1 5-year average base years 2002–2007	Column 2a 5-year average 2007–2011	Column 2b Adjustment for changes in review activity	Column 2c (Column 2a increased by column 2b)	Column 3 Percent change (column 1 to column 2c)	Column 4 Weighting factor	Column 5 Weighted percent change
NDAs/BLAs	123.8	130.8	−0.01%	130.8	5.6%	35.3%	1.99%
Active commercial INDs	5,528.2	6520.6	−2.41	6363.2	15.1	42.4	6.40
Efficacy supplements	163.4	157.4	NA	157.4	−3.7	9.9	−0.36
Manufacturing supplements	2589.2	2606.8	NA	2606.8	0.7	12.4	0.08
FY 2012 Workload Adjuster							8.12

The FY 2012 workload adjuster reflected in the calculations in table 3 of this document is 8.12 percent. Therefore the inflation-adjusted revenue amount of $603,689,000 from section II.C of this document will be increased by the FY 2012 workload adjuster of 8.12 percent, resulting in a total adjusted revenue amount in FY 2012 of $652,709,000, rounded to the nearest thousand dollars.

E. Rent and Rent-Related Adjustment to the FY 2011 Adjusted Fee Revenue Amount

PDUFA specifies that for FY 2010 and each subsequent FY, the revenue amount will be decreased if the actual cost paid for rent and rent-related expenses for preceding FYs are less than estimates made for such FYs in FY 2006 (see section 736(c)(3) of the FD&C Act). Table 3 of this document shows the estimates of rent and rent-related costs for FY 2008 through FY 2010 made in 2006 and the actual costs for these 3 FYs, the only FYs for which complete data are available at this time.

TABLE 3—COMPARISON OF ACTUAL AND ESTIMATED RENT AND RENT-RELATED EXPENSES FOR THE CENTER FOR DRUG EVALUATION AND RESEARCH (CDER) AND THE CENTER FOR BIOLOGICS EVALUATION AND RESEARCH (CBER)

	Estimates made in 2006				Actual amounts paid			
	FY 2008	FY 2009	FY 2010	Total	FY 2008	FY 2009	FY 2010	Total
CDER	$46,732,000	$40,415,000	$41,589,000	$128,736,000	$51,619,000	$64,687,250	$58,049,000	$174,355,250
CBER	22,295,000	23,067,000	25,652,000	71,014,000	26,715,000	26,966,750	27,815,000	81,496,750
Total	69,027,000	63,482,000	67,241,000	199,750,000	78,334,000	91,654,000	85,864,000	255,852,000

Because FY 2008 through FY 2010 costs for rent and rent-related items in total ($255,852,000) exceeded the estimates of these costs made in FY 2006 ($199,750,000), no decrease in the FY 2012 estimated PDUFA revenues is required under this provision of PDUFA.

III. Offset for Excess Collections Through FY 2011

Under the provisions of PDUFA III, which applies to user fees collected for FY 2002 through FY 2007, if the amount of fees collected for a FY exceeds the amount of fees specified in appropriation acts for that FY, the excess amount shall be credited to FDA's appropriation account and shall be subtracted from the amount of fees that would otherwise be authorized to be collected in a subsequent FY (See 21 U.S.C. 379h(g)(4) as amended by PDUFA III). In setting PDUFA fees for FY 2007 in August of 2006, some offsets were made under these provisions, but some offsets still need to be made based on final collection data for that period. Table 4 shows the amount of fees specified in FDA's annual appropriation for each year from FY 2003 through FY 2007; the amounts FDA has collected for each year; the amount of offset previously taken; and the cumulative difference. FDA will take this difference as an offset against FY 2012 fee collections.

TABLE 4—OFFSETS REMAINING TO BE TAKEN FOR PDUFA III, FY 2003–2007

Fiscal year	Fees appropriated	Fees collected	Excess collections offset under section 736(g)(4) of the FD&C Act when 2007 fees were set	Remaining excess collections to be offset
2003	$222,900,000	$218,302,684		
2004	249,825,000	258,333,700	$7,230,906	$1,277,794
2005	284,394,000	287,178,231		2,784,231
2006	305,332,000	313,514,278		8,209,278
2007	352,200,000	370,934,966		18,734,966
Cumulative difference to be offset against FY 2012 collections				30,974,959

In addition, under the provisions of PDUFA, as amended by PDUFA IV, if the sum of the cumulative amount of the fees collected for FY 2008 through 2010, and the amount of fees estimated to be collected under this section III of the document for FY 2011, exceeds the cumulative amount appropriated for fees for FYs 2008 through 2011, the excess will be credited to FDA's appropriation account and subtracted from the amount of fees that FDA would otherwise be authorized to collect for FY 2012 under the FD&C Act (21 U.S.C. 379h(g)(4) as amended by PDUFA IV).

Table 5 of this document shows the amounts specified in appropriation acts for each year from FY 2008 through FY 2011, and the amounts FDA has collected for FYs 2008, 2009, and 2010 as of March 31, 2011, and the amount that FDA estimated it would collect in FY 2011 when it published the notice of FY 2011 fees in the **Federal Register** on August 4, 2010 (75 FR 46956). In FY 2011, application fee revenues to date are less than anticipated when fees were set in August 2010. The bottom line of table 5 of this document shows the estimated cumulative difference between fee amounts specified in appropriation acts for FY 2008 through FY 2011 and PDUFA fee amounts collected.

TABLE 5—OFFSETS TO BE TAKEN FOR THE PDUFA IV PERIOD, FY 2008–2011 FOR FY 2008–2010, FEES COLLECTED THROUGH 3/31/2011; FOR FY 2011, ESTIMATE AS OF 3/31/2011

Fiscal year	Fees appropriated	Fees collected	Difference
2008	$459,412,000	$479,582,086	$20,170,086
2009	510,665,000	521,496,042	10,831,042
2010	578,162,000	567,877,548	(10,284,452)
2011 estimate	667,057,000	619,070,000	(47,987,000)
Cumulative difference			(27,270,324)

The cumulative fees collected for FYs 2008 through 2011 are estimated to be more than $27 million less than the cumulative fee amounts specified in appropriation acts during this same period. Under section 736(g)(4) of the FD&C Act, an offset is only made if the cumulative fees collected exceed cumulative fee appropriations for this period. Accordingly, there will be no offset of fees attributable to the PDUFA IV period of FYs 2008 through 2012. The only offset will be for the $30,974,959 for the PDUFA III period. Reducing the inflation and workload adjusted estimate of total revenue of $652,709,000 by the PDUFA III offset of $30,975,000 (rounded to the nearest thousand dollars) results in a revenue estimate of $621,734,000, before the final year adjustment.

IV. Final Year Adjustment

Under the provisions of PDUFA, as amended, the Secretary of Health and Human Services may, in addition to the inflation and workload adjustments, further increase the fees and fee revenues if such an adjustment is necessary to provide for not more than 3 months of operating reserves of carryover user fees for the process for the review of human drug applications for the first 3 months of FY 2013. The rationale for the amount of this increase shall be contained in the annual notice establishing fee revenues and fees for FY 2012 (see 21 U.S.C. 379h(c)(4)).

TABLE 6—ESTIMATED CARRYOVER BALANCE AT THE END OF FY 2012, AFTER DEDUCTION OF ESTIMATED FY 2011–2012 OPERATING COSTS

Total carryover balance end of FY 2010	$150,611,598
Used for offset in 2012	30,975,000
Used for additional 53 FTE (FDAAA drug safety), FY 2011–2012	29,771,000
Reserve for refunds	2,500,000
Used for CBER move to White Oak	37,896,000
Used to cover 2011 estimated revenue shortfalls	8,382,000
Used to cover 2012 estimated revenue shortfalls	8,694,000
Estimated 2012 end of FY carryover balance	32,393,598

As of September 30, 2010, FDA had cash carryover balances of $150,611,598. However, of this amount, a total of $30,975,000 will be used to cover the cost of the reduction in fee revenue that will result from the offset in fees for excess collections during PDUFA III. A total of $29,771,000 will be used in FY 2011 and FY 2012 to cover the cost of additional FTEs allocated in FY 2009 to address increased PDUFA workload associated with new drug safety provisions under FDAAA. A total of $2,500,000 is not available to FDA to obligate because it represents the minimum amount FDA will need to keep in reserve for refunds that will need to be made. A total of $37,896,000 is expected to be used for the CBER move to the White Oak campus in FY 2012–2014. Based on FDA's experience in FY 2010 when about 17 fewer paid full application fees were received by FDA than expected, causing a revenue shortfall, FDA is assuming that about 5.5 fewer full applications will be received in both FY 2011 and FY 2012, resulting in shortfalls of over $8,382,000 and $8,694,000 each year, respectively, that will have to be covered from the carryover balances. Thus the amount of carry-over balance FDA expects to be available for obligation at the end of FY 2012 is $32,393,598, as shown in the last line of table 6 of this document.

TABLE 7—ESTIMATED FEE REVENUE NEEDED TO SUSTAIN FY 2012 OPERATIONS FOR THE FIRST 3 MONTHS OF FY 2013

Estimated total spending from fees in FY 2012	$652,709,000
Estimated FY 2013 inflation costs at 3.72%	24,280,775
Estimated FY 2013 funds to sustain FY 2012 operations	676,989,755
Estimated fees needed for 3 months in FY 2013	169,247,444
Estimated end-of-FY 2012 carryover balance	32,393,598
Additional revenue needed for 3 months in FY 2013	136,854,000

In FY 2012, FDA expects to spend a total of $652,709,000, as noted at the end of section III of this document. To sustain current operations in FY 2012, with an anticipated inflation rate of 3.72 percent, FDA expects to obligate a total of $676,989,775 in FY 2013—or a total of about $169,247,444 during the first 3 months of FY 2013. The available

carryover balance at the beginning of FY 2013 is estimated at $32,393,598. Thus FDA would need an additional $136,854,000 ($169,247,444 minus $32,393,598, rounded to the nearest thousand dollars) as the final year adjustment to assure sufficient operating reserves for the first 3 months of FY 2013.

FDA recognizes that adding $136,854,000 to the fee revenue costs in FY 2012 poses a substantial burden on the regulated industry at a time when it is undergoing significant financial strain. In light of this, and in light of the fact that the legislative language authorizing the final year adjustment allows FDA discretion in whether to make this adjustment for a full 3 months of operating reserves or for a shorter period, FDA has decided to balance its own risks with the amount of burden the final year adjustment will place on the industry. In making this decision, FDA has decided to assume more risk, making the final year adjustment to allow for only 2 months of operating reserves instead of for 3 months of operating reserves. Accordingly FDA will make the final year adjustment for a lesser amount, as derived in table 8 of this document.

TABLE 8—ESTIMATED FEE REVENUE NEEDED TO SUSTAIN FY 2012 OPERATIONS FOR THE FIRST 2 MONTHS OF FY 2013

Estimated total spending from fees in FY 2012	$652,709,000
Estimated FY 2013 inflation costs at 3.72%	24,280,775
Estimated 2013 funds to sustain 2012 operations	676,989,775
Estimated fees needed for 2 months in FY 2013	112,831,629
Estimated 2012 end of FY carryover balance	32,393,598
Additional revenue needed for 2 months in 2013	80,438,031

Rounding this amount to the nearest thousand dollars results in a final year adjustment of $80,438,000. Adding this amount to the total of $621,743,000, the total after the offset adjustment at the end of section III of this document, results in a total revenue target of $702,172,000, rounded to the nearest thousand dollars, for FY 2012.

PDUFA specifies that one-third of the total fee revenue is to be derived from application fees, one-third from establishment fees, and one-third from product fees (see section 736(b)(2) of the FD&C Act). Accordingly, one-third of the total revenue amount (rounded to the nearest thousand dollars), or a total of $234,057,000 is the total amount of fee revenue that will be derived from each of these fee categories: Application Fees, Establishment Fees, and Product Fees.

While the fee revenue amount anticipated in FY 2012 is $702,172,000, as the previous paragraph shows, FDA assumes that the fee appropriation for FY 2012 will be 5 percent higher, or $737,281,000, rounded to the nearest thousand dollars. The PDUFA IV 5-Year Financial Plan, (which can be found at *http://www.fda.gov/ForIndustry/UserFees/PrescriptionDrugUserFee/ucm153456.htm*) states in Assumption 14 (Fee Revenue and Annual Appropriation Amount) that the PDUFA workload adjuster is a lagging adjustment dampened by averages over five years, and will not help FDA keep up with workload if there are sudden increases in the number of applications to be reviewed in the current fiscal year. Appropriated amounts for PDUFA fee revenue each year are estimated at 5 percent higher than estimated fee revenues for each year, to provide FDA with the ability to cope with surges in application review workload should that occur. If FDA collects less than the fee estimate at the beginning of the year and less than the fee appropriation, then collections rather than appropriations set the upper limit on how much FDA may actually keep and spend. If, however, FDA collects more than fee estimates at the beginning of the year, due to a workload surge, a slightly higher fee appropriation will permit FDA to keep and spend the higher collections in order to respond to a real surge in review workload that caused the increased collections—an unexpected increase in the number of applications that FDA must review in accordance with PDUFA goals. For this reason, in most FY since 1993, actual appropriations have slightly exceeded PDUFA fee revenue estimates made each year.

V. Application Fee Calculations

A. Application Fee Revenues and Application Fees

Application fees will be set to generate one-third of the total fee revenue amount, or $234,057,000, in FY 2012, as calculated previously in this document.

B. Estimate of the Number of Fee-Paying Applications and the Establishment of Application Fees

For FY 2008 through FY 2012, FDA will estimate the total number of fee-paying full application equivalents (FAEs) it expects to receive the next FY by averaging the number of fee-paying FAEs received in the 5 most recent fiscal years. Using a rolling average of the 5 most recent fiscal years is the same method that has been applied for the last 8 years.

In estimating the number of fee-paying FAEs that FDA will receive in FY 2012, the 5-year rolling average for the most recent 5 years will be based on actual counts of fee-paying FAEs received for FY 2007 through FY 2011. For FY 2011, FDA is estimating the number of fee-paying FAEs for the full year based on the actual count for the first 9 months and estimating the number for the final 3 months, as we have done for the past 8 years.

Table 9 of this document shows, in column 1, the total number of each type of FAE received in the first 9 months of FY 2011, whether fees were paid or not. Column 2 shows the number of FAEs for which fees were waived or exempted during this period, and column 3 shows the number of fee-paying FAEs received through June 30, 2011. Column 4 estimates the 12-month total fee-paying FAEs for FY 2011 based on the applications received through June 30, 2011. All of the counts are in FAEs. A full application requiring clinical data counts as one FAE. An application not requiring clinical data counts as one-half an FAE, as does a supplement requiring clinical data. An application that is withdrawn, or refused for filing, counts as one-fourth of an FAE if the applicant initially paid a full application fee, or one-eighth of an FAE if the applicant initially paid one-half of the full application fee amount.

TABLE 9—FY 2011 FULL APPLICATION EQUIVALENTS RECEIVED THROUGH JUNE 30, 2011, AND PROJECTED THROUGH SEPTEMBER 30, 2011

	Column 1 Total received through 6/30/2011	Column 2 Fees exempted or waived through 6/30/2011	Column 3 Total fee paying through 6/30/2011	Column 4 12-Month fee paying projection
Applications requiring clinical data	55	18	37	49.33
Applications not requiring clinical data	9.5	5.5	4	5.33
Supplements requiring clinical data	44.5	9	35.5	47.88
Withdrawn or refused to file	1.625	1.25	.375	.5
Total	110.625	33.75	76.875	102.5

In the first 9 months of FY 2011, FDA received 110.625 FAEs, of which 76.875 were fee-paying. Based on data from the last 10 FYs, on average, 25 percent of the applications submitted each year come in the final 3 months. Dividing 76.875 by 3 and multiplying by 4 extrapolates the amount to the full 12 months of the FY and projects the number of fee-paying FAEs in FY 2011 at 102.5.

As table 10 of this document shows, the average number of fee-paying FAEs received annually in the most recent 5-year period, and including our estimate for FY 2011, is 127.1 FAEs. FDA will set fees for FY 2011 based on this estimate as the number of full application equivalents that will pay fees.

TABLE 10—FEE-PAYING FAE 5-YEAR AVERAGE

Fiscal year	2007	2008	2009	2010	2011 estimate	5-Year average
Fee-Paying FAEs	134.4	140.0	140.3	118.4	102.5	127.1

The FY 2012 application fee is estimated by dividing the average number of full applications that paid fees over the latest 5 years, 127.1, into the fee revenue amount to be derived from application fees in FY 2012, $234,057,000. The result, rounded to the nearest $100, is a fee of $1,841,500 per full application requiring clinical data, and $920,750 per application not requiring clinical data or per supplement requiring clinical data.

VI. Fee Calculations for Establishment and Product Fees

A. Establishment Fees

At the beginning of FY 2011, the establishment fee was based on an estimate that 415 establishments would be subject to, and would pay, fees. By the end of FY 2011, FDA estimates that 475 establishments will have been billed for establishment fees, before all decisions on requests for waivers or reductions are made. FDA estimates that a total of 10 establishment fee waivers or reductions will be made for FY 2011. In addition, FDA estimates that another 15 full establishment fees will be exempted this year based on the orphan drug exemption in FDAAA (see section 736(k) of the FD&C Act). Subtracting 25 establishments (10 waivers, plus the estimated 15 establishments under the orphan exemption) from 450 leaves a net of 415 fee-paying establishments. FDA will use 450 for its FY 2012 estimate of establishments paying fees, after taking waivers and reductions into account. The fee per establishment is determined by dividing the adjusted total fee revenue to be derived from establishments ($234,057,000) by the estimated 450 establishments, for an establishment fee rate for FY 2012 of $520,100 (rounded to the nearest $100).

B. Product Fees

At the beginning of FY 2011, the product fee was based on an estimate that 2,385 products would be subject to and would pay product fees. By the end of FY 2011, FDA estimates that 2,450 products will have been billed for product fees, before all decisions on requests for waivers, reductions, or exemptions are made. FDA assumes that there will be 55 waivers and reductions granted. In addition, FDA estimates that another 30 product fees will be exempted this year based on the orphan drug exemption in FDAAA (see section 736(k) of the FD&C Act). FDA estimates that 2,365 products will qualify for product fees in FY 2011, after allowing for waivers and reductions, including the orphan drug products eligible under the FDAAA exemption, and will use this number for its FY 2012 estimate. The FY 2012 product fee rate is determined by dividing the adjusted total fee revenue to be derived from product fees ($234,057,000) by the estimated 2,365 products for a FY 2012 product fee of $98,970 (rounded to the nearest $10).

VII. Fee Schedule for FY 2012

The fee rates for FY 2012 are set out in table 11 of this document.

TABLE 11—FEE SCHEDULE FOR FY 2012

Fee category	Fee rates for FY 2012
Applications	
Requiring clinical data	$1,841,500
Not requiring clinical data	920,750
Supplements requiring clinical data	920,750
Establishments	520,100
Products	98,970

IX. Fee Payment Options and Procedures

A. Application Fees

The appropriate application fee established in the new fee schedule must be paid for any application or supplement subject to fees under PDUFA that is received after September 30, 2011. Payment must be made in U.S. currency by check, bank draft, or U.S. postal money order payable to the order of the Food and Drug Administration. Please include the user fee

identification (ID) number on your check, bank draft, or postal money order. Your payment can be mailed to: Food and Drug Administration, P.O. Box 979107, St. Louis, MO 63197–9000.

If checks are to be sent by a courier that requests a street address, the courier can deliver the checks to: U.S. Bank, Attention: Government Lockbox 979107, 1005 Convention Plaza, St. Louis, MO 63101. (**Note:** This U.S. Bank address is for courier delivery only.)

Please make sure that the FDA post office box number (P.O. Box 979107) is written on the check, bank draft, or postal money order.

Wire transfer payment may also be used. Please reference your unique user fee ID number when completing your transfer. The originating financial institution may charge a wire transfer fee between $15.00 and $35.00. Please ask your financial institution about the fee and include it with your payment to ensure that your fee is fully paid. The account information is as follows: New York Federal Reserve Bank, U.S. Dept of Treasury, TREAS NYC, 33 Liberty St., New York, NY 10045, Acct. No.: 75060099, Routing No.: 021030004, SWIFT: FRNYUS33, Beneficiary: FDA, 1350 Piccard Dr., Rockville, MD, 20850.

Application fees can also be paid online with an electronic check (ACH). FDA has partnered with the U.S. Department of the Treasury to utilize Pay.gov, a Web-based payment application, for online electronic payment. The Pay.gov feature is available on the FDA Web site after the user fee ID number is generated.

The tax identification number of the Food and Drug Administration is 53–0196965.

B. Establishment and Product Fees

FDA will issue invoices for establishment and product fees for FY 2012 under the new fee schedule in August 2011. Payment will be due on October 1, 2011. FDA will issue invoices in November 2012 for any products and establishments subject to fees for FY 2012 that qualify for fee assessments after the August 2011 billing.

Dated: July 26, 2011.

Leslie Kux,

Acting Assistant Commissioner for Policy.

[FR Doc. 2011–19332 Filed 7–29–11; 8:45 am]

BILLING CODE 4160–01–P

DEPARTMENT OF HEALTH AND HUMAN SERVICES

National Institutes of Health

Government-Owned Inventions; Availability for Licensing

AGENCY: National Institutes of Health, Public Health Service, HHS.

ACTION: Notice.

SUMMARY: The inventions listed below are owned by an agency of the U.S. Government and are available for licensing in the U.S. in accordance with 35 U.S.C. 207 to achieve expeditious commercialization of results of federally-funded research and development. Foreign patent applications are filed on selected inventions to extend market coverage for companies and may also be available for licensing.

ADDRESSES: Licensing information and copies of the U.S. patent applications listed below may be obtained by writing to the indicated licensing contact at the Office of Technology Transfer, National Institutes of Health, 6011 Executive Boulevard, Suite 325, Rockville, Maryland 20852–3804; telephone: 301–496–7057; fax: 301–402–0220. A signed Confidential Disclosure Agreement will be required to receive copies of the patent applications.

Combination Cancer Therapy Using an IL13-Targeted Toxin and a Vaccine

Description of Technology: Typical cancer treatments such as chemotherapy, radiation therapy and surgical resection are non-specific processes that kill healthy cells as well as diseased cells, ultimately resulting in discomfort and undesirable side-effects for patients. In an effort to reduce the burden on cancer patients, a tremendous effort has been placed on developing ways to increase the specificity of cancer treatments. One way to increase specificity is to identify proteins which are present on the surface of cancer cells but absent on normal healthy cells, and use that protein as a target for delivering a therapeutic agent. Because the therapeutic agent only reaches the diseased cell, patients are less likely to experience non-specific side-effects, reducing their pain burden during treatment.

IL13-receptor-alpha-2 (IL13–Rα2) is a cell surface protein that is selectively expressed on certain diseased cells, including cancer cells. IL13–Rα2 binds to the cytokine IL13, suggesting that a therapeutic agent fused to IL13 can target and kill only those cancer cells which express IL13–Rα2. Our inventors previously constructed fusion proteins comprising (1) IL13 and (2) an active fragment of the bacterial toxin *Pseudomonas* exotoxin A (PE). These IL13–PE fusion proteins demonstrated the ability to selectively kill cancer cells that overexpressed IL13–Rα2, as well as other types of diseased cells (asthma, pulmonary fibrosis) which overexpressed IL13–Rα2. This suggested that IL13–PE fusion proteins were excellent candidates for new therapeutic agents.

The inventors recently sought methods to increase the effectiveness of these IL13–PE fusion proteins in the treatment of disease. This technology is directed to a combination therapy comprising (a) a DNA vaccine against IL13–Rα2 and (b) an IL13–PE fusion protein. By combining these therapeutic approaches it is possible to kill certain cell types that express IL13–Rα2 at high levels (such as cancer cells), making this combinatorial approach an attractive potential therapeutic.

Applications:

- Treatment of diseases associated with the increased expression of IL13–Rα2
- Relevant diseases include pulmonary fibrosis, asthma and cancers such as pancreatic cancer, glioblastoma multiforme and other head and neck cancers

Advantages:

- The DNA vaccine only affects cells where IL13–Rα2 expression is increased, limiting their effects to diseased cells
- IL13–PE fusion proteins also only kill cells that overexpress IL13–Rα2, allowing specific targeting of treatment
- Targeted treatment decreases non-specific killing of healthy, essential cells, resulting in fewer side-effects and healthier patients

Development Status: Preclinical stage of development.

Inventors: Puri *et al.* (FDA).

Patent Status: US provisional application 61/451,331 (HHS reference E–104–2011/0–US–01).

For more information, see:

- US Patents 5,614,191, 5,919,456 and 6,518,061 (HHS technology reference E–266–1994/0)
- US Patent Publication US 20040136959 A1 (HHS technology reference E–032–2000/0)
- US Patent 7,541,040 (HHS technology reference E–296–2001/0)

Licensing Status: Available for licensing.

Licensing Contact: David A. Lambertson, PhD; 301–435–4632; *lambertsond@mail.nih.gov.*

Combination Cancer Therapy Using an IL13-Targeted Toxin and an HDAC Inhibitor

Description of Technology: Typical cancer treatments such as chemotherapy, radiation therapy and surgical resection are non-specific processes that kill healthy cells as well as diseased cells, ultimately resulting in discomfort and undesirable side-effects for patients. In an effort to reduce the burden on cancer patients, a tremendous effort has been placed on developing ways to increase the specificity of cancer treatments. One way to increase specificity is to identify proteins which are present on the surface of cancer cells but absent on normal healthy cells, and use that protein as a target for delivering a therapeutic agent. Because the therapeutic agent only reaches the diseased cell, patients are less likely to experience non-specific side-effects, reducing their pain burden during treatment.

IL13-receptor-alpha-2 (IL13–Rα2) is a cell surface protein that is selectively expressed on certain diseased cells, including cancer cells. IL13–Rα2 binds to the cytokine IL13, suggesting that a therapeutic agent fused to IL13 can target and kill only those cancer cells which express IL13–Rα2. Our inventors previously constructed fusion proteins comprising (1) IL13 and (2) an active fragment of the bacterial toxin *Pseudomonas* exotoxin A (PE). These IL13–PE fusion proteins demonstrated the ability to selectively kill cancer cells that overexpressed IL13–Rα2, as well as other types of diseased cells (asthma, pulmonary fibrosis) which overexpressed IL13–Rα2. This suggested that IL13–PE fusion proteins were excellent candidates for new therapeutic agents.

In an effort to increase the effectiveness of these IL13–PE fusion proteins, the inventors sought ways to increase the expression of IL13–Rα2 on cancer cells, thereby increasing the rate at which the therapeutic agent could kill the diseased cell. Histone deacetylase (HDAC) inhibitors have been employed as anti-cancer agents for several years, and a number of HDAC inhibitors are currently in clinical trials. Although the exact mechanism by which HDAC inhibitors function is unclear, it is believed that the ability of these molecules to increase the expression of anti-cancer genes is behind their therapeutic effect.

This invention concerns a means of improving specific cancer therapy through the combination of (a) IL13–PE fusion proteins and (b) HDAC inhibitors. The inventors surprisingly found that the expression of IL13–Rα2 increased in several types of pancreatic cancer cells in response to HDAC inhibitors, whereas normal, healthy cells did not experience such an increase in IL13–Rα2 expression. The use of IL13–PE fusion proteins in combination with HDAC inhibitors improved specific killing of pancreatic cancer cells relative to the use of IL13–PE fusion proteins in the absence of the HDAC inhibitors. This suggested that the use of IL13–PE fusion proteins along with HDAC inhibitors was a strong candidate combinatorial therapeutic for the treatment of various cancers (e.g., pancreatic, glioblastoma multiforme) and other diseases characterized by overexpression of IL13–Rα2 (e.g., asthma, pulmonary fibrosis).

Applications:

- Treatment of diseases associated with the increased expression of IL13–Rα2
- Relevant diseases include pulmonary fibrosis, asthma and cancers such as pancreatic cancer, glioblastoma multiforme and other head and neck cancers

Advantages:

- HDAC inhibitors only increased IL13–Rα2 expression in diseased cells, leaving normal healthy cells unaltered
- IL13–PE fusion proteins only kill cells that overexpress IL13–Rα2, allowing specific targeting of treatment
- Targeted treatment decreases non-specific killing of healthy, essential cells, resulting in fewer side-effects and healthier patients

Development Status: Preclinical stage of development

Inventors: Puri *et al.* (FDA)

Patent Status: US provisional application 61/494,779 (HHS reference E–107–2011/0–US–01)

For more information, see:

- US Patents 5,614,191, 5,919,456 and 6,518,061 (HHS technology reference E–266–1994/0)
- US Patent Publication US 20040136959 A1 (HHS technology reference E–032–2000/0)
- US Patent 7,541,040 (HHS technology reference E–296–2001/0)

Licensing Status: Available for licensing

Licensing Contact: David A. Lambertson, PhD; 301–435–4632; *lambertsond@mail.nih.gov*

Dated: July 26, 2011.

Richard U. Rodriguez,

Director, Division of Technology Development and Transfer, Office of Technology Transfer, National Institutes of Health.

[FR Doc. 2011–19378 Filed 7–29–11; 8:45 am]

BILLING CODE 4140–01–P

DEPARTMENT OF HEALTH AND HUMAN SERVICES

National Institutes of Health

Government-Owned Inventions; Availability for Licensing

AGENCY: National Institutes of Health, Public Health Service, HHS.

ACTION: Notice.

SUMMARY: The inventions listed below are owned by an agency of the U.S. Government and are available for licensing in the U.S. in accordance with 35 U.S.C. 207 to achieve expeditious commercialization of results of federally-funded research and development. Foreign patent applications are filed on selected inventions to extend market coverage for companies and may also be available for licensing.

ADDRESSES: Licensing information and copies of the U.S. patent applications listed below may be obtained by writing to the indicated licensing contact at the Office of Technology Transfer, National Institutes of Health, 6011 Executive Boulevard, Suite 325, Rockville, Maryland 20852–3804; *telephone:* 301–496–7057; *fax:* 301–402–0220. A signed Confidential Disclosure Agreement will be required to receive copies of the patent applications.

Methods and Software for the Quantitative Assessment of Vasculature in Allantois and Retina Explants

Description of Technology: The invention relates to methods and software that can facilitate and improve quantification, accuracy and standardization in the assessment of vasculature in angiogenesis assays such as in the allantois explants and the retina explants assays. The software of this invention can aid in the analysis of images resulting from these assays and thus enhance the accuracy and effectiveness of research in the area of angiogenesis. This in turn will lead to enhanced progress in the development of medical methods and drugs to treat diseases related to angiogenesis such as cancer, macular degeneration, and some pregnancy disorders.

Applications: The software can be integrated with a variety of imaging systems used in conjunction with angiogenesis assays to enhance the assessment and the quality of research in the area of angiogenesis.

Advantages:

- The method and software of the invention will make analysis of angiogenesis assays more accurate, better standardized, and less

cumbersome than existing analysis systems.

• This method and software will eliminate the user-dependent bias which is characteristic of existing methods.

• This method and software will generally improve the quality of analysis of angiogenesis assays.

• The software is suitable for integration in a variety of existing imaging systems and software as well as readily usable as an independent complementary technology in the research and biomedical fields.

Development Status: The software is fully developed.

Inventor: Enrique Zudaire (NCI).

Relevant Publications:

1. Pitulescu ME, Schmidt I, Benedito R, Adams RH. Inducible gene targeting in the neonatal vasculature and analysis of retinal angiogenesis in mice. Nat Protoc. 2010 Sep;5(9):1518–1534. [PMID: 20725067].

2. Gambardella L, *et al.* PI3K signaling through the dual GTPase-activating protein ARAP3 is essential for developmental angiogenesis. Sci Signal 2010 Oct 26;3(145):ra76. [PMID: 20978237].

3. Zudaire E, Gambardella L, Kurcz C, Vermeren S. A computational tool for quantitative analysis of vascular networks. PLoS One (Submitted).

Patent Status: HHS Reference No. E–176–2011/0—Software/Research Tool. Patent protection is not being pursued for this technology.

Licensing Status: The software is available for licensing.

Licensing Contacts:

• Uri Reichman, Ph.D., MBA; 301–435–4616; *UR7a@nih.gov.*

• Michael Shmilovich, *Esq.;* 301–435–5019; *shmilovm@mail.nih.gov.*

Pyruvate as a Transient Hypoxia Inducer for Anti-cancer Therapies

Description of Technology: Human solid tumors, such as breast cancer, lung cancer, ovarian cancer, pancreatic cancer and prostate cancer, etc. frequently have substantial volumes with low oxygen concentration, i.e. hypoxic. These hypoxic tumors show resistance to radiation and chemotherapies. To overcome such resistance, novel classes of agents have been designed and developed that are specifically active or activated under hypoxic conditions, in hypoxic tumors. The instant invention describes a novel idea to improve anti-cancer effect of hypoxia-sensitive therapeutics by using a rapidly oxidized reducing agent such as pyruvate or succinate. In the instant invention, the NIH investigators found that pyruvate, an endogenous substrate for energy production by mitochondria, induced severe hypoxia in tumors within 30 minutes of intravenous injection, and the tumor oxygen level reversibly returned to basal level within a few hours. Since pyruvate seems to induce only transient hypoxia, and its safety profiles are known, it may have significant advantages over other hypoxia inducers reported to date for improving the efficacy of hypoxia-sensitive anti-cancer therapies.

Applications:

• Provide a novel way to target various cancers, especially solid tumors for treatment;

• Improve the efficacy of using hypoxic toxins for cancer treatment;

• *In vivo* screening of oxygen-status dependent drugs.

Market: Cancer is the second leading cause of death in the U.S. The National Cancer Institute estimates the overall annual costs for cancer in the U.S. at $107 billion; $37 billion for direct medical costs, $11 billion for morbidity costs (cost of lost productivity), and $59 billion for mortality costs. There is an ongoing need for innovative approaches to anticancer therapy.

Development Status: Pre-clinical stage of development.

Inventors: Drs. Shingo Matsumoto (NCI), James B. Mitchell (NCI), and Robert J. Gillies (H. Lee Moffitt Cancer Center and Research Institute) *et al.*

Publication: Poster presentation in the International Society for Magnetic Resonance in Medicine (ISMRM) meeting in May 2011. Manuscript is *in press.*

Patent Status: U.S. Provisional Application No. 61/478,465 filed April 22, 2011 (HHS Reference No. E–144–2011/0–US–01).

Licensing Status: Available for licensing.

Licensing Contact: Betty B. Tong, PhD; 301–594–6565; *tongb@mail.nih.gov.*

Multivalent Vaccines for Rabies Virus and Filoviruses

Description of Technology: No vaccine candidates against Ebola virus (EBOV) or Marburg virus (MARV) are nearing licensure and the need to develop a safe and efficacious vaccine against filoviruses continues. Whereas several preclinical vaccine candidates against EBOV or MARV exist, their further development is a major challenge based on safety concerns, pre-existing vector immunity, and issues such as manufacturing, dosage, and marketability. The inventors have developed a new platform based on live or chemically inactivated (killed) rabies virus (RABV) virions containing EBOV glycoprotein (GP) in their envelope. In preclinical trials, immunization with such recombinant RABV virions provided excellent protection in mice against lethal challenge with the mouse adapted EBOV and RABV. More specifically, the inventors have developed a trivalent filovirus vaccine based on killed rabies virus virions for use in humans to confer protection from all medically relevant filoviruses and RABV. Two additional vectors containing EBOV Sudan GP or MARV GP are planned to be constructed in addition to the previously developed EBOV Zaire GP containing vaccine. The efficiency of these vaccines against challenge with EBOV, MARV and RABV will be studied in multiple preclinical studies. Live attenuated vaccines are being developed for use in at risk nonhuman primate populations in Africa and inactivated vaccines are being developed for use in humans.

Potential Commercial Applications:

• Biodefense vaccine.

• Developing country vaccine.

• Multivalent prophylactic Ebola/Marburg/rabies vaccine.

Competitive Advantages:

• Vaccines are replication deficient and/or inactivated.

• Protection against rabies and Ebola.

• Reliable and cost-effective manufacture.

• No preexisting immunity to vectors.

• No potential vaccine reactogenicity.

Development Stage:

• Pre-clinical.

• *In vitro* data available.

• *In vivo* data available (animal).

Inventors: Joseph Blaney, Jason Paragas, Peter Jahrling, Reed Johnson (NIAID).

Intellectual Property: HHS Reference No. E–032–2011/0 — U.S. Patent Application No. 61/439,046 filed 03 Feb 2011.

Licensing Contact: Peter A. Soukas, J.D.; 301–435–4646; *soukasp@mail.nih.gov.*

Layered Electrophoretic Transfer for Analysis of Low or Medium Abundant Proteins in Tissue Samples

Description of Technology: The subject invention is a method to selectively process the protein content from a two dimensional sample, such as a tissue section, for more detailed analysis. It is particularly useful for analysis of a subset of proteins from a complex protein mixture. The method employs a layer of polyacrylamide gels and an electric field. Proteins from the sample are transferred and sieved through a stack of polyacrylamide gels of varying concentrations. Thus, it is possible to analyze specific subsets of

proteins in the different gel layers and maintain the two dimensional location of the proteins within the original sample. One of the advantages of this technology is that it allows for isolation and subsequent analysis of low abundant or medium abundant proteins by a number of different methodologies such as imaging mass spectrometry.

Applications:

- Protein Analysis of Tissue Samples.
- Histology and Pathology.

Advantages:

- Isolation of low or moderately-abundant proteins in tissue sections.
- Method maintains 2-dimensional location of proteins in tissue samples.

Development Status: In vitro data can be provided upon request.

Market:

- Diagnostic.
- Pathology.
- Basic Research.

Inventors: Michael Emmert-Buck, Liang Zhu, and Michael Tangrea (NCI).

Publication: Zhu L, Tangrea MA, Mukherjee S, Emmert-Buck MR. Layered electrophoretic transfer—A method for pre-analytic processing of histological sections. Proteomics. 2011 Mar;11(5):883–889. [PMID: 21280224].

Patent Status: U.S. Provisional Application No. 61/420,258 filed December 6, 2010 (HHS Reference No. E–020–2011/0–US–01).

Licensing Status: Available for licensing.

Licensing Contact: Kevin W. Chang, PhD; 301–435–5018; *changke@mail.nih.gov.*

Collaborative Research Opportunity: The Center for Cancer Research, Laboratory of Pathology, Pathogenetics Unit, is seeking statements of capability or interest from parties interested in collaborative research to further develop, evaluate, or commercialize layered electrophoretic transfer (LET). Please contact John Hewes, PhD at 301–435–3121 or hewesj@*mail.nih.gov* for more information.

Pertussis Vaccine

Description of Technology: Despite mass vaccination, reported pertussis cases have increased in the United States and other parts of the world, probably because of increased awareness, improved diagnostic means, and waning vaccine-induced immunity among adolescents and adults. Licensed vaccines do not kill the organism directly; the addition of a component inducing bactericidal antibodies would improve vaccine efficacy. This application claims *Bordetella pertussis* and *Bordetella bronchiseptica* LPS-derived core oligosaccharide (OS) protein conjugates. *B. pertussis* and *B. bronchiseptica* core OS were bound to aminooxylated BSA via their terminal Kdo residues. The two conjugates induced similar anti-*B. pertussis* LPS IgG levels in mice. Conjugate-induced antisera were bactericidal against *B. pertussis.*

Potential Commercial Applications:

- Pertussis prophylactic conjugate vaccine.
- Use of vaccine to generate neutralizing antibodies.

Competitive Advantages: Conjugates are easy to prepare and standardize; added to a recombinant pertussis toxoid, they may induce antibacterial and antitoxin immunity.

Development Stage:

- Pre-clinical.
- *In vitro* data available.
- *In vivo* data available (animal).

Inventors: Joanna Kubler-Kielb (NICHD), Rachel Schneerson (NICHD), John B. Robbins (NICHD), Ariel Ginzberg (NICHD), Teresa Lagergard (NICHD), *et al.*

Publication: Kubler-Kielb J, Vinogradov E, Lagergård T, Ginzberg A, King JD, Preston A, Maskell DJ, Pozsgay V, Keith JM, Robbins JB, Schneerson R. Oligosaccharide conjugates of Bordetella pertussis and bronchiseptica induce bactericidal antibodies, an addition to pertussis vaccine. Proc Natl Acad Sci U S A. 2011 Mar 8;108(10):4087–4092. [PMID: 21367691].

Intellectual Property: HHS Reference No. E–006–2011/0—U.S. Application No. 61/438,190 filed 31 Jan 2011.

Related Technology: HHS Reference No. E–183–2005/0 —U.S. Application No. 12/309,428 filed 16 Jan 2009.

Licensing Contact: Peter A. Soukas, J.D.; 301–435–4646; *soukasp@mail.nih.gov.*

Collaborative Research Opportunity: The NICHD is seeking statements of capability or interest from parties interested in collaborative research to further develop, evaluate, or commercialize vaccines against pertussis. For collaboration opportunities, please contact Joseph Conrad, III, PhD at *jmconrad@mail.nih.gov.*

Novel Methods for the Reversible Incorporation of Functional Groups Into RNA and DNA: Synthesis and Uses for 2′-O-aminooxymethyl Nucleoside Derivatives

Description of Technology: The delivery of DNA/RNA therapeutic drugs is still a major hurdle for the clinical application of DNA/RNA-based drugs. Also, developments in silencing the expression of specific genes, through RNA interference pathways, have led to an increased demand for synthetic RNA sequences and have created a pressing need for rapid and efficient methods for RNA synthesis. Recently, FDA scientists have developed a novel phosphoramidite, 2′-O-aminooxymethyl ribonucleoside (2′-O-protected compounds). The 2′-O-aminooxymethyl ribonucleoside can be modified with any type of functional group using an oximation reaction as long as the functional group contains an aldehyde, ketone, or acetal group. Modification of the 2′-O-aminooxymethyl with an aldehyde results in a conjugated 2′-phosphoramidite that could be readily converted back to the native ribonucleoside and its corresponding by-product. On the other hand, the oximation of 2′-O-aminooxymethy with a ketone results in an irreversible conjugated form of the phosphoramidite.

The 2′-O-protected compounds of the present technology have several advantages, for example, the 2′-O-protected compound is stable during the various reaction steps involved in oligonucleotide synthesis; and the protecting group can be easily removed after the synthesis of the oligonucleotide, for example, by reaction with tetrabutylammonium fluoride; and the O-protected groups do not generate DNA/RNA alkylating side products, which have been reported during removal of 2′-O-(2-cyanoethyl)oxymethyl or 2′-O-[2-(4-tolylsulfonyl)ethoxymethyl groups under similar conditions.

Applications:

- Incorporation of a potentially large array of functional groups into RNA and DNA oligonucleotides for diagnostic and/or therapeutic applications.
- Conjugation of a variety of sugars or complex carbohydrates to DNA/RNA therapeutic oligonucleotides.
- Attachment of cell membrane-penetrating peptides to therapeutic DNA/RNA oligonucleotides.

Inventors: Serge L. Beaucage and Jacek Cieslak (FDA).

Patent Status: U.S. Provisional Application No. 61/471,451 filed 04 April 2011 (HHS Reference No. E–262–2010/0–US–01).

Licensing Status: Available for licensing.

Licensing Contact: Suryanarayana Vepa, PhD, J.D.; 301–435–5020; *vepas@mail.nih.gov.*

Dated: July 26, 2011.

Richard U. Rodriguez,

Director, Division of Technology Development and Transfer, Office of Technology Transfer, National Institutes of Health.

[FR Doc. 2011–19377 Filed 7–29–11; 8:45 am]

BILLING CODE 4140–01–P

DEPARTMENT OF HEALTH AND HUMAN SERVICES

National Institutes of Health

Center for Scientific Review Notice of Closed Meetings

Pursuant to section 10(d) of the Federal Advisory Committee Act, as amended (5 U.S.C. App.), notice is hereby given of the following meetings.

The meetings will be closed to the public in accordance with the provisions set forth in sections 552b(c)(4) and 552b(c)(6), Title 5 U.S.C., as amended. The grant applications and the discussions could disclose confidential trade secrets or commercial property such as patentable material, and personal information concerning individuals associated with the grant applications, the disclosure of which would constitute a clearly unwarranted invasion of personal privacy.

Name of Committee: Center for Scientific Review Special Emphasis Panel, Member Conflict: Topics in Microbial Pathogenesis and Immunity.
Date: August 18–19, 2011.
Time: 8:30 a.m. to 5 p.m.
Agenda: To review and evaluate grant applications.
Place: National Institutes of Health, 6701 Rockledge Drive, Bethesda, MD 20892, (Virtual Meeting).
Contact Person: Kenneth Izumi, PhD, Scientific Review Officer, IDM IRG, Center for Scientific Review, National Institutes of Health, 6701 Rockledge Drive, Room 3204, MSC 7808, Bethesda, MD 20892, 301–496–6980, *izumikm@csr.nih.gov.*

Name of Committee: Center for Scientific Review Special Emphasis Panel, Member Conflict: Health and Behavior.
Date: August 22, 2011.
Time: 12 to 1:30 p.m.
Agenda: To review and evaluate grant applications.
Place: National Institutes of Health, 6701 Rockledge Drive, Bethesda, MD 20892, (Telephone Conference Call).
Contact Person: Martha M. Faraday, PhD, Scientific Review Officer, Center for Scientific Review, National Institutes of Health, 6701 Rockledge Drive, Room 3110, MSC 7808, Bethesda, MD 20892, 301–435–3575, *faradaym@csr.nih.gov.*

Name of Committee: Center for Scientific Review Special Emphasis Panel, Member Conflict: Oral Microbiology, Biofilm and Periodontology.
Date: August 24, 2011.
Time: 2 to 4 p.m.
Agenda: To review and evaluate grant applications.
Place: National Institutes of Health, 6701 Rockledge Drive, Bethesda, MD 20892, (Telephone Conference Call).
Contact Person: Baljit S Moonga, PhD, Scientific Review Officer, Center for Scientific Review, National Institutes of Health, 6701 Rockledge Drive, Room 4214, MSC 7806, Bethesda, MD 20892, 301–435–1777, *moongabs@mail.nih.gov.*

Name of Committee: Center for Scientific Review Special Emphasis Panel, Member Conflict: Vascular Hematology.
Date: August 25, 2011.
Time: 1 to 2:30 p.m.
Agenda: To review and evaluate grant applications.
Place: National Institutes of Health, 6701 Rockledge Drive, Bethesda, MD 20892, (Telephone Conference Call).
Contact Person: Anshumali Chaudhari, PhD, Scientific Review Officer, Center for Scientific Review, National Institutes of Health, 6701 Rockledge Drive, Room 4124, MSC 7802, Bethesda, MD 20892, (301) 435–1210, *chaudhaa@csr.nih.gov.*

(Catalogue of Federal Domestic Assistance Program Nos. 93.306, Comparative Medicine; 93.333, Clinical Research, 93.306, 93.333, 93.337, 93.393–93.396, 93.837–93.844, 93.846–93.878, 93.892, 93.893, National Institutes of Health, HHS)

Dated: July 22, 2011.

Anna P. Snouffer,

Deputy Director, Office of Federal Advisory Committee Policy.

[FR Doc. 2011–19375 Filed 7–29–11; 8:45 am]

BILLING CODE 4140–01–P

DEPARTMENT OF HEALTH AND HUMAN SERVICES

National Institutes of Health

National Library of Medicine Notice of Meetings

Pursuant to section 10(d) of the Federal Advisory Committee Act, as amended (5 U.S.C. App), notice is hereby given of meetings of the Board of Regents of the National Library of Medicine.

The meeting will be open to the public as indicated below, with attendance limited to space available. Individuals who plan to attend and need special assistance, such as sign language interpretation or other reasonable accommodations, should notify the Contact Person listed below in advance of the meeting.

The meeting will be closed to the public in accordance with the provisions set forth in sections 552b(c)(4) and 552b(c)(6), Title 5 U.S.C., as amended. The grant applications and the discussions could disclose confidential trade secrets or commercial property such as patentable materials, and personal information concerning individuals associated with the grant applications, the disclosure of which would constitute a clearly unwarranted invasion of personal privacy.

Name of Committee: Board of Regents of the National Library of Medicine EP Subcommittee.
Date: October 3, 2011.
Closed: 4 p.m. to 5:30 p.m.
Agenda: Grant Applications.
Place: National Library of Medicine, Building 38, 2nd Floor, Conference Room B, 8600 Rockville Pike, Bethesda, MD 20892.
Contact Person: Donald A.B. Lindberg, MD, Director, National Library of Medicine, 8600 Rockville Pike, Bethesda, MD 20892, 301–496–6221, *lindberg@mail.nih.gov.*

Name of Committee: Board of Regents of the National Library of Medicine; Subcommittee on Outreach and Public Information.
Date: October 4, 2011.
Open: 7:30 a.m. to 8:45 a.m.
Agenda: Outreach Activities.
Place: National Library of Medicine, Building 38, 2nd Floor, Conference Room B, 8600 Rockville Pike, Bethesda, MD 20892.
Contact Person: Donald A.B. Lindberg, MD, Director, National Library of Medicine, 8600 Rockville Pike, Bethesda, MD 20892, 301–496–6221, *lindberg@mail.nih.gov.*

Name of Committee: Board of Regents of the National Library of Medicine.
Date: October 4–5, 2011.
Open: October 4, 2011, 9 a.m. to 4:30 p.m.
Agenda: Program Discussion.
Place: National Library of Medicine, Building 38, 2nd Floor, Board Room, 8600 Rockville Pike, Bethesda, MD 20892.
Closed: October 4, 2011, 4:30 p.m. to 5 p.m.
Agenda: To review and evaluate grant applications.
Place: National Library of Medicine, Building 38, 2nd Floor, Board Room, 8600 Rockville Pike, Bethesda, MD 20892.
Open: October 5, 2011, 9 a.m. to 12 p.m.
Agenda: Program Discussion.
Place: National Library of Medicine, Building 38, 2nd Floor, Board Room, 8600 Rockville Pike, Bethesda, MD 20892.
Contact Person: Donald A.B. Lindberg, MD, Director, National Library of Medicine, 8600 Rockville Pike, Bethesda, MD 20892, 301–496–6221, *lindberg@mail.nih.gov.*

Any interested person may file written comments with the committee by forwarding the statement to the Contact Person listed on this notice. The statement should include the name, address, telephone number and when applicable, the business or professional affiliation of the interested person.

In the interest of security, NIH has instituted stringent procedures for entrance onto the NIH campus. All visitor vehicles, including taxicabs, hotel, and airport shuttles will be inspected before being allowed on campus. Visitors will be asked to show one form of identification (for example, a government-issued photo ID, driver's license, or passport) and to state the purpose of their visit.

Information is also available on the Institute's/Center's home page: *http://www.nlm.nih.gov/od/bor/bor.html,* where an agenda and any additional information for the meeting will be posted when available.

(Catalogue of Federal Domestic Assistance Program No. 93.879, Medical Library Assistance, National Institutes of Health, HHS).

Dated: July 26, 2011.

Anna P. Snouffer,

Deputy Director, Office of Federal Advisory Committee Policy.

[FR Doc. 2011–19374 Filed 7–29–11; 8:45 am]

BILLING CODE 4140–01–P

DEPARTMENT OF HEALTH AND HUMAN SERVICES

National Institutes of Health

National Heart, Lung, and Blood Institute Notice of Closed Meeting

Pursuant to section 10(d) of the Federal Advisory Committee Act, as amended (5 U.S.C. App.), notice is hereby given of a meeting of the National Heart, Lung, and Blood Advisory Council.

The meeting will be closed to the public in accordance with the provisions set forth in sections 552b(c)(4) and 552b(c)(6), Title 5 U.S.C., as amended. The grant applications and the discussions could disclose confidential trade secrets or commercial property such as patentable material, and personal information concerning individuals associated with the grant applications, the disclosure of which would constitute a clearly unwarranted invasion of personal privacy.

Name of Committee: National Heart, Lung, and Blood Advisory Council.

Date: September 9, 2011.

Time: 1 p.m. to 3 p.m.

Agenda: To review and evaluate grant applications.

Place: National Institutes of Health, Building 31, 31 Center Drive, C-Wing, Room 10, Bethesda, MD 20892 (Telephone Conference Call).

Contact Person: Stephen C. Mockrin, PhD, Director, Division of Extramural Research Activities, National Heart, Lung, and Blood Institute, National Institutes of Health, 6701 Rockledge Drive, Room 7100, Bethesda, MD 20892, (301) 435–0260, *mockrins@nhlbi.nih.gov.*

Information is also available on the Institute's/Center's home page: *http://www.nhlbi.nih.gov/meetings/index.htm,* where an agenda and any additional information for the meeting will be posted when available.

(Catalogue of Federal Domestic Assistance Program Nos. 93.233, National Center for Sleep Disorders Research; 93.837, Heart and Vascular Diseases Research; 93.838, Lung Diseases Research; 93.839, Blood Diseases and Resources Research, National Institutes of Health, HHS)

Dated: July 26, 2011.

Jennifer S. Spaeth,

Director, Office of Federal Advisory Committee Policy.

[FR Doc. 2011–19373 Filed 7–29–11; 8:45 am]

BILLING CODE 4140–01–P

DEPARTMENT OF HEALTH AND HUMAN SERVICES

National Institutes of Health

Center for Scientific Review Notice of Closed Meeting

Pursuant to section 10(d) of the Federal Advisory Committee Act, as amended (5 U.S.C. App.), notice is hereby given of the following meeting.

The meeting will be closed to the public in accordance with the provisions set forth in sections 552b(c)(4) and 552b(c)(6), Title 5 U.S.C., as amended. The grant applications and the discussions could disclose confidential trade secrets or commercial property such as patentable material, and personal information concerning individuals associated with the grant applications, the disclosure of which would constitute a clearly unwarranted invasion of personal privacy.

Name of Committee: Center for Scientific Review Special Emphasis Panel; Member Conflict: NeuroAIDS and HIVAN Applications.

Date: August 9, 2011.

Time: 2 p.m. to 5 p.m.

Agenda: To review and evaluate grant applications.

Place: National Institutes of Health, 6701 Rockledge Drive, Bethesda, MD 20892 (Telephone Conference Call).

Contact Person: Mary Clare Walker, PhD, Scientific Review Officer, Center for Scientific Review, National Institutes of Health, 6701 Rockledge Drive, Room 5208, MSC 7852, Bethesda, MD 20892, (301) 435–1165, *walkermc@csr.nih.gov.*

This notice is being published less than 15 days prior to the meeting due to the timing limitations imposed by the review and funding cycle.

(Catalogue of Federal Domestic Assistance Program Nos. 93.306, Comparative Medicine; 93.333, Clinical Research; 93.306, 93.333, 93.337, 93.393–93.396, 93.837–93.844, 93.846–93.878, 93.892, 93.893, National Institutes of Health, HHS)

Dated: July 26, 2011.

Jennifer S. Spaeth,

Director, Office of Federal Advisory Committee Policy.

[FR Doc. 2011–19369 Filed 7–29–11; 8:45 am]

BILLING CODE 4140–01–P

DEPARTMENT OF HOMELAND SECURITY

U.S. Citizenship and Immigration Services

[OMB Control No. 1615–0092]

Agency Information Collection Activities: E-Verify Program

ACTION: 60-Day Notice: Correction.

SUMMARY: In accordance with the Paperwork Reduction Act of 1995 (PRA), on July 13, 2011, USCIS published a 60-day notice, ''Memorandum of Understanding to Participate in the Basic Pilot Employment Eligibility Program; Verify Employment Eligibility Status'' in the **Federal Register** at 76 FR 41279. USCIS is correcting two errors in this notice. First, the title incorrectly read ''Memorandum of Understanding to Participate in the Basic Pilot Employment Eligibility Program; Verify Employment Eligibility Status''. Instead it should read ''E-Verify Program.'' Second, comments are not requested on the E-Verify Memorandum of Understanding as previously published. Instead, comments are requested on the burden for enrolling in E-Verify (and modifying an ID/IQ contract if applicable), inputting information directly from Form I–9, Employment Eligibility Verification into the E-Verify web interface, and performing initial and secondary queries (for example: referring and resolving tentative nonconfirmations.).

Written comments and/or suggestions regarding the item(s) contained in this notice, especially regarding the estimated public burden and associated response time, should be directed to the Department of Homeland Security (DHS), USCIS, Chief, Regulatory Products Division, Office of the Executive Secretariat, 20 Massachusetts Avenue, NW., Washington, DC 20529–2020. Comments may also be submitted to DHS via facsimile to 202–272–0997 or via e-mail at *USCISFRComment@dhs.gov.* When submitting comments by e-mail please make sure to add OMB Control Number 1615–0092 in the subject box.

The public comment period is unchanged and ends September 12, 2011, as cited in the previously published 60-day notice at 76 FR 41279 on July 13, 2011.

Note: The address listed in this notice should be used only to submit comments concerning this information collection. Please do not submit requests for individual case status inquiries to this address. If you are seeking information about the status of

your individual case, please check ''My Case Status'' online at *https://egov.uscis.gov/cris/Dashboard.do,* or call the USCIS National Customer Service Center at 1–800–375–5283 (TTY 1–800–767–1833).

Written comments and suggestions from the public and affected agencies should address one or more of the following four points:

(1) Evaluate whether the proposed collection of information is necessary for the proper performance of the functions of the agency, including whether the information will have practical utility;

(2) Evaluate the accuracy of the agency's estimate of the burden of the proposed collection of information, including the validity of the methodology and assumptions used;

(3) Enhance the quality, utility, and clarity of the information to be collected; and

(4) Minimize the burden of the collection of information on those who are to respond, including through the use of appropriate automated, electronic, mechanical, or other technological collection techniques or other forms of information technology, e.g., permitting electronic submission of responses.

Overview of This Information Collection

1. *Type of Information Collection:* Revision of a currently approved information collection.

2. *Title of the Form/Collection:* E-Verify Program.

3. *Agency form number, if any, and the applicable component of the Department of Homeland Security sponsoring the collection:* No Agency Form Number; File OMB–18. U.S. Citizenship and Immigration Services.

4. *Affected public who will be asked or required to respond, as well as a brief abstract: Primary:* Business or other for profit. E–Verify allows employers to electronically verify the employment eligibility status of newly hired employees.

5. *An estimate of the total number of respondents and the amount of time estimated for an average respondent to respond:* 125,015 completing the E-Verify web interface at 17 responses at .86 hours (52 minutes) per response; 521,134 employers registering to participate in the program at 2.26 hours (2 hours and 15 minutes) per response; 3,333 requiring ID/IQ modification at 2 hours per response; 4,094,955 initial queries at .12 hours (7 minutes) per response; 195,329 secondary queries at 1.94 hours (1 hour 56 minutes) per response.

6. *An estimate of the total public burden (in hours) associated with the collection:* 3,882,482 annual burden hours.

If you need a copy of the supporting statement, please visit the Web site at: *http://www.regulations.gov/.*

We may also be contacted at: USCIS, Regulatory Products Division, Office of the Executive Secretariat, 20 Massachusetts Avenue, NW., Washington, DC 20529–2020, Telephone number 202–272–8377.

Dated: July 27, 2011.

Sunday Aigbe,

Chief, Regulatory Products Division, Office of the Executive Secretariat, U.S. Citizenship and Immigration Services, Department of Homeland Security.

[FR Doc. 2011–19423 Filed 7–29–11; 8:45 am]

BILLING CODE 9111–97–P

DEPARTMENT OF HOMELAND SECURITY

U.S. Citizenship and Immigration Services

Agency Information Collection Activities: Form N–426, Extension of a Currently Approved Information Collection; Comment Request

ACTION: 30-Day Notice of Information Collection Under Review: Form N–426, Request for Certification of Military or Naval Service.

The Department of Homeland Security, U.S. Citizenship and Immigration Services (USCIS) will be submitting the following information collection request to the Office of Management and Budget (OMB) for review and clearance in accordance with the Paperwork Reduction Act of 1995. The information collection was previously published in the **Federal Register** on May 10, 2011, at 76 FR 27078, allowing for a 60-day public comment period. USCIS did not receive any comments.

The purpose of this notice is to allow an additional 30 days for public comments. Comments are encouraged and will be accepted until August 31, 2011. This process is conducted in accordance with 5 CFR 1320.10.

Written comments and/or suggestions regarding the item(s) contained in this notice, especially regarding the estimated public burden and associated response time, should be directed to the Department of Homeland Security (DHS), and to the Office of Information and Regulatory Affairs, Office of Management and Budget (OMB), USCIS Desk Officer. Comments may be submitted to: USCIS, Chief, Regulatory Products Division, 20 Massachusetts Avenue, NW., Washington, DC 20529. Comments may also be submitted to DHS via facsimile to 202–272–8352 or via e-mail at *uscisfrcomment@dhs.gov*, and to the OMB USCIS Desk Officer via facsimile at 202–395–5806 or via e-mail at *oira_submission@omb.eop.gov.*

When submitting comments by e-mail, please make sure to add OMB Control No. 1615–0053 in the subject box. Written comments and suggestions from the public and affected agencies should address one or more of the following four points:

(1) Evaluate whether the proposed collection of information is necessary for the proper performance of the functions of the agency, including whether the information will have practical utility;

(2) Evaluate the accuracy of the agency's estimate of the burden of the proposed collection of information, including the validity of the methodology and assumptions used;

(3) Enhance the quality, utility, and clarity of the information to be collected; and

(4) Minimize the burden of the collection of information on those who are to respond, including through the use of appropriate automated, electronic, mechanical, or other technological collection techniques or other forms of information technology, e.g., permitting electronic submission of responses.

Overview of this information collection:

(1) *Type of Information Collection:* Extension of a currently approved information collection.

(2) *Title of the Form/Collection:* Request for Certification of Military or Naval Service.

(3) *Agency form number, if any, and the applicable component of the Department of Homeland Security sponsoring the collection:* Form N–426. U.S. Citizenship and Immigration Services.

(4) *Affected public who will be asked or required to respond, as well as a brief abstract:*

Primary: Individuals or Households. This form will be used by USCIS to request a verification of the military or naval service claim by an applicant filing for naturalization on the basis of honorable service in the U.S. armed forces.

(5) *An estimate of the total number of respondents and the amount of time estimated for an average respondent to respond:* 45,000 responses at 20 minutes (.333) per response.

(6) *An estimate of the total public burden (in hours) associated with the collection:* 14,985 annual burden hours.

If you have additional comments, suggestions, or need a copy of the proposed information collection instrument with instructions, or additional information, please visit: *http://www.regulations.gov/search/index.jsp.*

If additional information is required contact: USCIS, Regulatory Products Division, 20 Massachusetts Avenue, NW., Washington, DC 20529–2020, telephone (202) 272–8377.

Dated: July 26, 2011.

Sunday Aigbe,

Chief, Regulatory Products Division, Office of the Executive Secretariat, U.S. Citizenship and Immigration Services, Department of Homeland Security.

[FR Doc. 2011–19316 Filed 7–29–11; 8:45 am]

BILLING CODE 9111–97–P

DEPARTMENT OF HOMELAND SECURITY

U.S. Citizenship and Immigration Services

Agency Information Collection Activities: Form I–777, Extension of a Currently Approved Information Collection; Comment Request

ACTION: 30-Day Notice of Information Collection Under Review: Form I–777, Application for Replacement of Northern Mariana Card.

The Department of Homeland Security, U.S. Citizenship and Immigration Services (USCIS) will be submitting the following information collection request to the Office of Management and Budget (OMB) for review and clearance in accordance with the Paperwork Reduction Act of 1995. The information collection was previously published in the **Federal Register** on May 19, 2011, at 76 FR 28800, allowing for a 60-day public comment period. USCIS received one comment for this information collection.

The purpose of this notice is to allow an additional 30 days for public comments. Comments are encouraged and will be accepted until August 31, 2011. This process is conducted in accordance with 5 CFR 1320.10.

Written comments and/or suggestions regarding the item(s) contained in this notice, especially regarding the estimated public burden and associated response time, should be directed to the Department of Homeland Security (DHS), and to the Office of Information and Regulatory Affairs, Office of Management and Budget (OMB), USCIS Desk Officer. Comments may be submitted to: USCIS, Chief, Regulatory Products Division, 20 Massachusetts Avenue, NW., Washington, DC 20529–2020. Comments may also be submitted to DHS via facsimile to 202–272–0997 or via e-mail at *uscisfrcomment@dhs.gov,* and to the OMB USCIS Desk Officer via facsimile at 202–395–5806 or via e-mail at *oira_submission@omb.eop.gov.*

When submitting comments by e-mail please make sure to add OMB Control Number 1615–0042 in the subject box. Written comments and suggestions from the public and affected agencies should address one or more of the following four points:

(1) Evaluate whether the proposed collection of information is necessary for the proper performance of the functions of the agency, including whether the information will have practical utility;

(2) Evaluate the accuracy of the agencies estimate of the burden of the proposed collection of information, including the validity of the methodology and assumptions used;

(3) Enhance the quality, utility, and clarity of the information to be collected; and

(4) Minimize the burden of the collection of information on those who are to respond, including through the use of appropriate automated, electronic, mechanical, or other technological collection techniques or other forms of information technology, e.g., permitting electronic submission of responses.

Overview of this information collection:

(1) *Type of Information Collection:* Extension of a currently approved information collection.

(2) *Title of the Form/Collection:* Application for Replacement of Northern Mariana Card.

(3) *Agency form number, if any, and the applicable component of the Department of Homeland Security sponsoring the collection:* Form I–777; U.S. Citizenship and Immigration Services.

(4) *Affected public who will be asked or required to respond, as well as a brief abstract: Primary: Individuals or Households.* Form I–777 is used by applicants applying for a Northern Marina identification card if they received United States citizenship pursuant to Public law 94–241 (covenant to establish a Commonwealth of the Northern Mariana Islands).

(5) *An estimate of the total number of respondents and the amount of time estimated for an average respondent to respond:* 100 responses at .50 hours (30 minutes) per response.

(6) *An estimate of the total public burden (in hours) associated with the collection:* 50 annual burden hours.

If you need a copy of the information collection instrument, please visit the Web site at: *http://www.regulations.gov.*

We may also be contacted at: USCIS, Regulatory Products Division, 20 Massachusetts Avenue, NW., Washington, DC 20529–2020; Telephone 202–272–8377.

Dated: July 26, 2011.

Sunday Aigbe,

Chief, Regulatory Products Division, Office of the Executive Secretariat, U.S. Citizenship and Immigration Services, Department of Homeland Security.

[FR Doc. 2011–19317 Filed 7–29–11; 8:45 am]

BILLING CODE 9111–97–P

DEPARTMENT OF HOMELAND SECURITY

U.S. Customs and Border Protection

Notice of Issuance of Final Determination Concerning a Certain Patient Transport Chair

AGENCY: U.S. Customs and Border Protection, Department of Homeland Security.

ACTION: Notice of final determination.

SUMMARY: This document provides notice that U.S. Customs and Border Protection (''CBP'') has issued a final determination concerning the country of origin of a certain patient transport chair. Based upon the facts presented, CBP has concluded in the final determination that the U.S. is the country of origin of the patient transport chair for purposes of U.S. government procurement.

DATE: The final determination was issued on July 26, 2011. A copy of the final determination is attached. Any party-at-interest, as defined in 19 CFR 177.22(d), may seek judicial review of this final determination on or before August 31, 2011.

FOR FURTHER INFORMATION CONTACT: Elif Eroglu, Valuation and Special Programs Branch: (202) 325–0277.

SUPPLEMENTARY INFORMATION: Notice is hereby given that on July 26, 2011, pursuant to subpart B of part 177, Customs Regulations (19 CFR part 177, subpart B), CBP issued a final determination concerning the country of origin of the BREEZ patient transport chair which may be offered to the U.S. Government under an undesignated government procurement contract. This final determination, Headquarters

Ruling Letter (''HQ'') H156919, was issued at the request of Electro Kinetic Technologies under procedures set forth at 19 CFR part 177, subpart B, which implements Title III of the Trade Agreements Act of 1979, as amended (19 U.S.C. 2511–18). In the final determination, CBP has concluded that, based upon the facts presented, the assembly of the BREEZ patient transport chair in the U.S., from parts made in China, Canada, France, and the U.S., constitutes a substantial transformation, such that the U.S. is the country of origin of the finished article for purposes of U.S. government procurement.

Section 177.29, Customs Regulations (19 CFR 177.29), provides that notice of final determinations shall be published in the **Federal Register** within 60 days of the date the final determination is issued. Section 177.30, CBP Regulations (19 CFR 177.30), provides that any party-at-interest, as defined in 19 CFR 177.22(d), may seek judicial review of a final determination within 30 days of publication of such determination in the **Federal Register**.

Dated: July 26, 2011.

Sandra L. Bell,

Executive Director, Regulations and Rulings, Office of International Trade.

Attachment

HQ H156919
July 26, 2011
OT:RR:CTF:VS H156919 EE
CATEGORY: Marking
Robert Gardenier
M.E. Dey & Co., Inc.
700 W Virginia Street Suite 300
Milwaukee, WI 53204

RE: U.S. Government Procurement; Title III, Trade Agreements Act of 1979 (19 U.S.C. § 2511); Subpart B, Part 177, CBP Regulations; Patient Transport Chair

Dear Mr. Gardenier:

This is in response to your correspondence of March 14, 2011, telephone conference on June 10, 2011, and additional information you submitted on July 21, 2011, requesting a final determination on behalf of Electro Kinetic Technologies (''Electro Kinetic''), pursuant to subpart B of part 177, U.S. Customs and Border Protection (''CBP'') Regulations (19 C.F.R. § 177.21 *et seq.*). Under the pertinent regulations, which implement Title III of the Trade Agreements Act of 1979, as amended (19 U.S.C. § 2511 *et seq.*), CBP issues country of origin advisory rulings and final determinations as to whether an article is or would be a product of a designated country or instrumentality for the purpose of granting waivers of certain ''Buy American'' restrictions in U.S. law or practice for products offered for sale to the U.S. Government.

This final determination concerns the country of origin of the BREEZ patient transport chair. We note that Electro Kinetic is a party-at-interest within the meaning of 19 C.F.R. § 177.22(d)(1) and is entitled to request this final determination.

FACTS:

Electro Kinetic, headquartered in Germantown, Wisconsin, designs and manufactures ergonomically focused products used to transport people and materials within the retail, healthcare, and material handling industries. The merchandise at issue is the Electro Kinetic BREEZ patient transport chair engineered and assembled in the U.S. from U.S. and foreign components.

The BREEZ transport chair is intended to transport patients or mobility impaired individuals. With the drive system integrated into the wheelchair, the patient transport chair can be maneuvered through tight or crowded hallways, elevators and rooms, transporting patients up to 750 lbs.

The patient transport chair is produced in the U.S. from approximately 481 components. All of the components are of U.S., Chinese, Canadian, or French origin. The majority of the components are assembled in the U.S. into 26 subassemblies which are ultimately assembled with the remaining components into the final product.

You submitted the costed bill of materials for the patient transport chair. The significant materials which comprise the patient transport chair include: wheels, casters, arm weldments, anti-tip weldments, swivel locks, 17 cable assemblies, a transaxle subassembly (which includes a Chinese-origin transaxle), a circuit breaker, a guard plate, a static strap subassembly, a Chinese-origin frame base weldment, a garment rod, a control box subassembly (which includes a French-origin handle circuit board, a control box, a key switch subassembly, and a forward/reverse switch subassembly), an s-drive subassembly, tire assemblies (which include wheel rims and foam filled tires), a charger subassembly (which includes a Canadian-origin charger), a control box plate, a high back flip seat, and batteries. It takes approximately six and a half hours to produce the finished patient transport chair.

You state that the production of the BREEZ patient transport chair in the U.S. begins with the production of 17 cable subassemblies which include: positive and negative battery cable subassemblies, a handle cable subassembly, an emergency stop switch subassembly, a horn potentiometer subassembly, a speed potentiometer subassembly, a brake cable subassembly, a black horn cable subassembly, a controller cable subassembly, a brown horn cable subassembly, a charger cable subassembly, a motor cable subassembly, and a battery jumper subassembly.

Next, the s-drive, which is part of s-drive subassembly, is programmed for acceleration, deceleration, and speed profiles. The transaxle subassembly, static strap subassembly, control box subassembly, keyswitch subassembly, forward/reverse switch subassembly, s-drive subassembly, tire assemblies, and charger assembly are produced. The wheels are added to the transaxle subassembly and assembled onto the frame. The control box subassembly, circuit breaker, charger assembly, horn and battery subassemblies are then installed onto the frame.

In the final assembly stage, the rear casters, front anti-tip casters, seat, seat belt, headrest, arm rests, foot rests and the IV pole are installed.

You provided a copy of the product brochure for the BREEZ patient transport chair.

ISSUE:

What is the country of origin of the BREEZ patient transport chair for the purpose of U.S. government procurement?

LAW AND ANALYSIS:

Pursuant to subpart B of part 177, 19 C.F.R. § 177.21 et seq., which implements Title III of the Trade Agreements Act of 1979, as amended (19 U.S.C. § 2511 et seq.), CBP issues country of origin advisory rulings and final determinations as to whether an article is or would be a product of a designated country or instrumentality for the purposes of granting waivers of certain ''Buy American'' restrictions in U.S. law or practice for products offered for sale to the U.S. Government.

Under the rule of origin set forth under 19 U.S.C. § 2518(4)(B):

An article is a product of a country or instrumentality only if (i) it is wholly the growth, product, or manufacture of that country or instrumentality, or (ii) in the case of an article which consists in whole or in part of materials from another country or instrumentality, it has been substantially transformed into a new and different article of commerce with a name, character, or use distinct from that of the article or articles from which it was so transformed.

See also, 19 C.F.R. § 177.22(a).

In rendering advisory rulings and final determinations for purposes of U.S. government procurement, CBP applies the provisions of subpart B of part 177 consistent with the Federal Acquisition Regulations. See 19 C.F.R. § 177.21. In this regard, CBP recognizes that the Federal Acquisition Regulations restrict the U.S. Government's purchase of products to U.S.-made or designated country end products for acquisitions subject to the TAA. See 48 C.F.R. § 25.403(c)(1). The Federal Acquisition Regulations define ''U.S.-made end product'' as:

* * *an article that is mined, produced, or manufactured in the United States or that is substantially transformed in the United States into a new and different article of commerce with a name, character, or use distinct from that of the article or articles from which it was transformed.

48 C.F.R. § 25.003.

In order to determine whether a substantial transformation occurs when components of various origins are assembled into completed products, CBP considers the totality of the circumstances and makes such determinations on a case-by-case basis. The country of origin of the item's components, extent of the processing that occurs within a country, and whether such processing renders a product with a new name, character, and use are primary considerations in such cases. Additionally, factors such as the resources expended on product design and development, extent and nature of post-assembly inspection and testing procedures, and the degree of skill required during the actual manufacturing process may be relevant when determining whether a substantial transformation has occurred. No one factor is determinative.

In Headquarters Ruling Letter (''HQ'') H095239, dated June 2, 2010, CBP held that certain upright and recumbent exercise bikes, assembled in the U.S., were products of the U.S. for purposes of U.S. government procurement. The exercise bikes were assembled from a range of U.S. and foreign components and subassemblies. With the exception of the standard console assembly, all of the subassemblies, which were ultimately assembled to produce the final product, were produced in the U.S. In finding that the imported components were substantially transformed in the U.S., CBP stated that the assembly process that occurred in the U.S. was complex and meaningful, required the assembly of a large number of components, and rendered the final article with a new name, character, and use.

As in HQ H095239, the BREEZ patient transport chair comprises the assembly of a large number of components, namely, 481 components. The majority of the components are assembled in the U.S. into 26 subassemblies which are then assembled with the remaining components into the finished patient transport chair. It takes approximately six and a half hours to produce the finished patient transport chair. We find that under the described assembly process, the foreign components lose their individual identities and become an integral part of the article, the patient transport chair, possessing a new name, character and use. The assembly process that occurs in the U.S. is complex and meaningful, involving the assembly of components into subassemblies which are then made into the final product. Therefore, based upon the information before us, we find that the imported components that are used to manufacture the patient transport chair are substantially transformed as a result of the assembly operations performed in the U.S. and that the country of origin of the patient transport chair for government procurement purposes is the U.S.

HOLDING:

The imported components that are used to manufacture the BREEZ patient transport chair are substantially transformed as a result of the assembly operations performed in the U.S. Therefore, we find that the country of origin of the BREEZ patient transport chair for government procurement purposes is the U.S.

Notice of this final determination will be given in the Federal Register, as required by 19 C.F.R. § 177.29. Any party-at-interest other than the party which requested this final determination may request, pursuant to 19 C.F.R. § 177.31, that CBP reexamine the matter anew and issue a new final determination. Pursuant to 19 C.F.R. § 177.30, any party-at-interest may, within 30 days after publication of the Federal Register notice referenced above, seek judicial review of this final determination before the Court of International Trade.

Sincerely,

Sandra L. Bell, Executive Director, Regulations and Rulings, Office of International Trade

[FR Doc. 2011–19400 Filed 7–29–11; 8:45 am]

BILLING CODE P

DEPARTMENT OF THE INTERIOR

Office of the Secretary

Vendor Outreach Workshop for Small Businesses in New Mexico of the United States

AGENCY: Office of the Secretary, Interior.

ACTION: Notice.

SUMMARY: The Office of Small and Disadvantaged Business Utilization of the Department of the Interior and the Department of Agriculture are hosting a Vendor Outreach Workshop for small businesses in the State of New Mexico of the United States that are interested in doing business with each agency. This outreach workshop will review market contracting opportunities for the attendees. Business owners will be able to share their individual perspectives with Contracting Officers, Program Managers and Small Business Specialists from the Department.

DATES: The workshop will be held on September 15, 2011, from 8:30 a.m. to 4 p.m.

ADDRESSES: The workshop will be held at the Albuquerque Convention Center, 401 Second Street, Albuquerque, New Mexico 87102. Register online at: *http://www.doi.gov/osdbu.*

FOR FURTHER INFORMATION CONTACT: Mark Oliver, Director, Office of Small and Disadvantaged Business Utilization, 1951 Constitution Ave., NW., MS–320 SIB, Washington, DC 20240, telephone 1–877–375–9927 (Toll-Free).

SUPPLEMENTARY INFORMATION: In accordance with the Small Business Act, as amended by Public Law 95–507, the Department has the responsibility to promote the use of small and small disadvantaged business for its acquisition of goods and services. The Department is proud of its accomplishments in meeting its business goals for small, small disadvantaged, 8(a), woman-owned, HUBZone, and service-disabled veteran-owned businesses. In Fiscal Year 2010, the Department awarded 50 percent of its $2.6 billion in contracts to small businesses.

This fiscal year, the Office of Small and Disadvantaged Business Utilization are reaching out to our internal stakeholders and the Department's small business community by conducting several vendor outreach workshops. The Department's presenters will focus on contracting and subcontracting opportunities and how small businesses can better market services and products. Over 3,000 small businesses have been targeted for this event. If you are a small business interested in working with the

Department, we urge you to register online at: *http://www.doi.gov/osdbu* and attend the workshop.

These outreach events are a new and exciting opportunity for the Department's bureaus and offices to improve their support for small business. Additional scheduled events are posted on the Office of Small and Disadvantaged Business Utilization Web site at *http://www.doi.gov/osdbu.*

Mark Oliver,

Director, Office of Small and Disadvantaged Business Utilization.

[FR Doc. 2011–19360 Filed 7–29–11; 8:45 am]

BILLING CODE 4210–RK–P

DEPARTMENT OF THE INTERIOR

Bureau of Land Management

[LLOR–936000–L14300000–ET0000; HAG–11–0220; OROR–66533]

Notice of Application for Withdrawal and Public Meeting; Oregon

AGENCY: Bureau of Land Management, Interior.

ACTION: Notice.

SUMMARY: The United States Forest Service (USFS) has filed an application with the Bureau of Land Management (BLM) requesting the Secretary of the Interior to withdraw approximately 5,610 acres of National Forest System lands, for a period of 5 years in aid of legislation to protect certain lands along the Chetco Wild and Scenic River. This notice temporarily segregates the lands for up to 2 years from location and entry under the United States mining laws, and from operation of the mineral and geothermal leasing laws, while the withdrawal application is being processed. This notice also gives an opportunity to comment on the application and announces the date, time, and location of a public meeting.

DATES: Comments must be received by October 31, 2011.

ADDRESSES: Comments should be sent to the Oregon/Washington State Director, BLM, P.O. Box 2965, Portland, Oregon 97208–2965, or 333 SW. 1st Avenue, Portland, Oregon 97204.

FOR FURTHER INFORMATION CONTACT: Charles R. Roy, BLM Oregon/Washington State Office, 503–808–6189, or William C. Drummond, USFS Pacific Northwest Region, 503–808–2420. Persons who use a telecommunications device for the deaf (TDD) may call the Federal Information Relay Service (FIRS) at 1–800–877–8339 to contact the above individual during normal business hours. The FIRS is available 24 hours a day, 7 days a week, to leave a message or question with the above individual. You will receive a reply during normal business hours.

SUPPLEMENTARY INFORMATION: The USFS has filed an application requesting that the Secretary of the Interior withdraw, for a 5-year period, the following described National Forest System lands from location and entry under the United States mining laws (30 U.S.C. ch. 2), and operation of the mineral and geothermal leasing laws, subject to valid existing rights.

The application applies only to the Federal lands within the following described lands. The intent of this description is to follow the outer boundary of the Chetco Wild and Scenic River corridor, downstream of the western boundary of the Kalmiopsis Wilderness, as said corridor is described in the official boundary package certified by the USFS, Regional Forester, Region 6, on December 18, 1998, and available for public review at 333 SW. 1st Avenue, Portland, Oregon 97204. The wild and scenic corridor contains approximately 5,610 acres in Curry County and lies within the following sections:

Willamette Meridian

T. 38 S., R. 11 W.,
secs. 5 to 7, inclusive, and sec. 18.
T. 38 S., R. 12 W.,
secs. 9 to 16, inclusive, sec. 21, secs. 27 to 29, inclusive, secs. 32 and 33.
T. 39 S., R. 12 W.,
secs. 4, 5, 8, 9, 16, 17, 20, 29, 30, and 31.

The purpose of the withdrawal is to temporarily segregate the lands in aid of legislation.

No suitable alternative sites were considered, as the pending legislation is to protect the lands specified in this notice. The use of a right-of-way, interagency agreement, or cooperative agreement would not provide adequate protection. The USFS would not need to acquire water rights to fulfill the purpose of the requested withdrawal.

Temporary land uses may be permitted during this segregative period, including licenses, permits, rights-of-way, and disposal of vegetative resources; however, the lands will be segregated from appropriation under the mining law.

Records related to the application may be examined by contacting Charles R. Roy at the above address or phone number.

On or before October 31, 2011, all persons who wish to submit comments, suggestions, or objections in connection with the application may present their views in writing to the BLM State Director at the address indicated above.

Comments, including names and street addresses of respondents, will be available for public review at the address indicated above during regular business hours. Before including your address, phone number, e-mail address, or other personal identifying information in your comment, be advised that your entire comment—including your personal identifying information—may be made publicly available at any time. While you can ask us in your comment to withhold from public review your personal identifying information, we cannot guarantee that we will be able to do so.

Notice is hereby given that a public meeting in connection with the application for withdrawal will be held on September 15, 2011 from 5 p.m. to 7 p.m. at the USFS, Gold Beach District Office located at 539 SW. Chetco Avenue, Brookings, Oregon. Interested parties may make oral statements at the meeting and/or may file written statements with the BLM. All statements received will be considered before any recommendation concerning the withdrawal is submitted to the Assistant Secretary—Land and Minerals Management for final action.

The application will be processed in accordance with the regulations set forth in 43 CFR part 2300.

Authority: 43 CFR 2310.3–1.

Fred O'Ferrall,

Chief, Branch of Land, Mineral, and Energy Resources.

[FR Doc. 2011–19302 Filed 7–29–11; 8:45 am]

BILLING CODE 3410–11–P

DEPARTMENT OF THE INTERIOR

National Park Service

Draft Environmental Impact Statement on a Denali Park Road Vehicle Management Plan for Denali National Park and Preserve

AGENCY: National Park Service, Interior.

ACTION: Notice of availability of the Draft Environmental Impact Statement on a Denali Park Road Vehicle Management Plan for Denali National Park and Preserve.

SUMMARY: The National Park Service announces the availability of a Draft Environmental Impact Statement (DEIS) on a Denali Park Road Vehicle Management Plan for Denali National Park and Preserve. The document describes and analyzes the environmental impacts of a no action alternative and two action alternatives for management of vehicle use on the Denali Park Road. This notice

announces the public comment period, the locations of public meetings, and solicits comments on the DEIS.

DATES: Comments on the DEIS must be received no later than September 30, 2011.

ADDRESSES: Written comments on the DEIS should be submitted to Miriam Valentine, Park Planner, Denali National Park and Preserve, P.O. Box 588, Talkeetna, AK 99676.

Submit comments electronically through the NPS Planning, Environment and Public Comment system (PEPC) at *http://parkplanning.nps.gov.* The DEIS may be viewed and retrieved at this Web site as well. Hard copies of the DEIS are available by request from the aforementioned address. See Supplementary Information for the locations of public meetings.

FOR FURTHER INFORMATION CONTACT: Miriam Valentine, Park Planner, Denali National Park and Preserve, *miriam_valentine@nps.gov,* Telephone: 907–733–9102.

SUPPLEMENTARY INFORMATION: The purpose of the DEIS is to analyze the effects of the alternatives for managing vehicle use along the Park Road in Denali National Park. Since the mid-1920s, visitors have been able to travel the approximately 90-mile Park Road on buses operated by the park concessioner. Starting in 1972, when private vehicle traffic was restricted beyond mile 15 of the road, visitors have used the mandatory visitor transportation system. The present approach for managing vehicles on the Park Road is based on the park's 1986 general management plan, which established a seasonal limit of 10,512 vehicles beyond mile 15 between approximately Memorial Day and a week after Labor Day. As tourism in Alaska has increased, so have demands for visits along the Park Road. This plan evaluates how to manage vehicle use, while continuing to provide high quality visitor experience, opportunities to view wildlife in natural habitats and to access the park's wilderness. The Denali Park Road Vehicle Management Plan is intended to guide park managers over the next 20 years with management of vehicles on the Park Road. The DEIS considers a reasonable range of alternatives based on management objectives, park resources and values, and public input.

Alternative A: (No Action): This alternative would continue current management of vehicle use on the Park Road. In addition to a seasonal limit of 10,512 vehicles past mile 15, there would continue to be specific seasonal and daily limits to tour buses, shuttle buses, inholder traffic, professional photographer vehicles, NPS administrative vehicles and other categories of vehicles.

Alternative B: This alternative would use an adaptive management framework for vehicle use based on indicators and standards for visitor experiences and resource protection. While adhering to these standards, management would maximize seating on all transit and tour vehicles to offer the largest number of visitors the opportunity to travel the Park Road. This adaptive management framework would include options for reducing or scheduling non-bus traffic to allow for additional visitor use.

Alternative C: This alternative would use an adaptive management framework for vehicle use based on indicators and standards for visitor experiences and resource protection. While adhering to these standards, management would promote a wide variety of visitor opportunities that would include brief experiences in the park's entrance area, short visits along segments of the Park Road, special interest tours, and multiday experiences in the park's backcountry. This adaptive management framework would include options for reducing or scheduling non-bus traffic to allow for additional visitor use.

At this time, the NPS does not have a preferred alternative, and public comment is sought to inform selection of a preferred alternative in the final EIS.

Public meetings are scheduled in Alaska at the following locations: Anchorage, Fairbanks, and Denali National Park. The specific dates and times of the public meetings will be announced in local media.

If you include your address, phone number, e-mail address, or other personal identifying information in your comment, you should be aware that your entire comment—including your personal identifying information—may be made publicly available at any time. While you can ask us in your comment to withhold your personal identifying information from public review, we cannot guarantee that we will be able to do so.

Dated: May 6, 2011.

Sue E. Masica,

Regional Director, Alaska.

[FR Doc. 2011–19310 Filed 7–29–11; 8:45 am]

BILLING CODE 4310–PF–P

DEPARTMENT OF THE INTERIOR

Office of Surface Mining Reclamation and Enforcement

Notice of Proposed Information Collection

AGENCY: Office of Surface Mining Reclamation and Enforcement, Interior.

ACTION: Notice and request for comments.

SUMMARY: In compliance with the Paperwork Reduction Act of 1995, the Office of Surface Mining Reclamation and Enforcement (OSM) is announcing its intention to renew the approval for the collection of information under 30 CFR part 842 which allows the collection and processing of citizen complaints and requests for inspection. The collection described below has been forwarded to the Office of Management and Budget (OMB) for review and approval. The information collection request describes the nature of the information collection and the expected burden and cost.

DATES: OMB has up to 60 days to approve or disapprove the information collection but may respond after 30 days. Therefore, public comments should be submitted to OMB by August 31, 2011, in order to be assured of consideration.

ADDRESSES: Submit comments to the Office of Information and Regulatory Affairs, Office of Management and Budget, Attention: Department of Interior Desk Officer, by telefax at (202) 395–5806 or via e-mail to *OIRA_Docket@omb.eop.gov.* Also, please send a copy of your comments to John Trelease, Office of Surface Mining Reclamation and Enforcement, 1951 Constitution Ave., NW., Room 202—SIB, Washington, DC 20240, or electronically to *jtrelease@osmre.gov.* Please refer to OMB Control Number 1029–0118 in your correspondence.

FOR FURTHER INFORMATION CONTACT: To receive a copy of the information collection request contact John Trelease at (202) 208–2783, or electronically at *jtrelease@osmre.gov.* You may also review this collection by going to *http://www.reginfo.gov* (Information Collection Review, Currently Under Review, Agency is Department of the Interior, DOI–OSMRE).

SUPPLEMENTARY INFORMATION: OMB regulations at 5 CFR part 1320, which implement provisions of the Paperwork Reduction Act of 1995 (Pub. L. 104–13), require that interested members of the public and affected agencies have an opportunity to comment on information

collection and recordkeeping activities [see 5 CFR 1320.8(d)]. OSM has submitted a request to OMB to approve the collection of information in 30 CFR part 842—Federal inspections and monitoring. OSM is requesting a 3-year term of approval for this information collection activity.

An agency may not conduct or sponsor, and a person is not required to respond to, a collection of information unless it displays a currently valid OMB control number. The OMB control number for this collection of information, 1029–0118, has been placed on the electronic citizen complaint form that may be found on OSM's home page at *http://vvww.osmre.gov/citizen.htm.*

As required under 5 CFR 1320.8(d), a **Federal Register** notice soliciting comments on this collection of information was published on May 11, 2011 (76 FR 27346). No comments were received. This notice provides the public with an additional 30 days in which to comment on the following information collection activity:

Title: 30 CFR 842—Federal inspections and monitoring.

OMB Control Number: 1029–0118.

Summary: For purposes of information collection, this part establishes the procedures for any person to notify the Office of Surface Mining in writing of any violation that may exist at a surface coal mining operation. The information will be used to investigate potential violations of the Act or applicable State regulations.

Bureau Form Number: None.

Frequency of Collection: Once.

Description of Respondents: Citizens.

Total Annual Responses: 50.

Total Annual Burden Hours: 184 hours.

Total Annual Non-Wage Cost: $0.

Send comments on the need for the collection of information for the performance of the functions of the agency; the accuracy of the agency's burden estimates; ways to enhance the quality, utility and clarity of the information collection; and ways to minimize the information collection burden on respondents, such as use of automated means of collection of the information, to the addresses listed under **ADDRESSES**. Please refer to the appropriate OMB control number 1029–0118 in your correspondence.

Before including your address, phone number, email address, or other personal identifying information in your comment, you should be aware that your entire comment, including your personal identifying information, may be made publicly available at any time. While you can ask us in your comment to withhold your personal identifying information from public review, we cannot guarantee that we will be able to do so.

Dated: July 22, 2011.

Stephen M. Sheffield,

Acting Chief, Division of Regulatory Support.

[FR Doc. 2011–19295 Filed 7–29–11; 8:45 am]

BILLING CODE 4310–05–M

INTERNATIONAL TRADE COMMISSION

Notice of Receipt of Complaint; Solicitation of Comments Relating to the Public Interest

AGENCY: U.S. International Trade Commission.

ACTION: Notice.

SUMMARY: Notice is hereby given that the U.S. International Trade Commission has received a complaint entitled *In Re Certain Products Containing Interactive Program Guide and Parental Controls Technology,* DN 2836; the Commission is soliciting comments on any public interest issues raised by the complaint.

FOR FURTHER INFORMATION CONTACT: James R. Holbein, Secretary to the Commission, U.S. International Trade Commission, 500 E Street, SW., Washington, DC 20436, telephone (202) 205–2000. The public version of the complaint can be accessed on the Commission's electronic docket (EDIS) at *http://edis.usitc.gov,* and will be available for inspection during official business hours (8:45 a.m. to 5:15 p.m.) in the Office of the Secretary, U.S. International Trade Commission, 500 E Street, SW., Washington, DC 20436, telephone (202) 205–2000.

General information concerning the Commission may also be obtained by accessing its Internet server (*http://www.usitc.gov*). The public record for this investigation may be viewed on the Commission's electronic docket (EDIS) at *http://edis.usitc.gov.* Hearing-impaired persons are advised that information on this matter can be obtained by contacting the Commission's TDD terminal on (202) 205–1810.

SUPPLEMENTARY INFORMATION: The Commission has received a complaint filed on behalf of Rovi Corporation, Rovi Guides, Inc., United Video Properties, Inc., and Gemstar Development Corporation on July 26, 2011. The complaint alleges violations of section 337 of the Tariff Act of 1930 (19 U.S.C. 1337) in the importation into the United States, the sale for importation, and the sale within the United States after importation of certain products containing interactive program guide and parental controls technology. The complaint names as respondents Sharp Corporation of Japan; Sharp Electronics Corporation of NJ; and Sharp Electronics Manufacturing Company of America, Inc. of NJ.

The complainant, proposed respondents, other interested parties, and members of the public are invited to file comments, not to exceed five pages in length, on any public interest issues raised by the complaint. Comments should address whether issuance of an exclusion order and/or a cease and desist order in this investigation would negatively affect the public health and welfare in the United States, competitive conditions in the United States economy, the production of like or directly competitive articles in the United States, or United States consumers.

In particular, the Commission is interested in comments that:

(i) Explain how the articles potentially subject to the orders are used in the United States;

(ii) Identify any public health, safety, or welfare concerns in the United States relating to the potential orders;

(iii) Indicate the extent to which like or directly competitive articles are produced in the United States or are otherwise available in the United States, with respect to the articles potentially subject to the orders; and

(iv) Indicate whether Complainant, Complainant's licensees, and/or third party suppliers have the capacity to replace the volume of articles potentially subject to an exclusion order and a cease and desist order within a commercially reasonable time.

Written submissions must be filed no later than by close of business, five business days after the date of publication of this notice in the **Federal Register**. There will be further opportunities for comment on the public interest after the issuance of any final initial determination in this investigation.

Persons filing written submissions must file the original document and 12 true copies thereof on or before the deadlines stated above with the Office of the Secretary. Submissions should refer to the docket number (''Docket No. 2836'') in a prominent place on the cover page and/or the first page. The Commission's rules authorize filing submissions with the Secretary by facsimile or electronic means only to the extent permitted by section 201.8 of the rules (see Handbook for Electronic Filing Procedures, *http://www.usitc.gov/*

secretary/fed_reg_notices/rules/documents/handbook_on_electronic_filing.pdf). Persons with questions regarding electronic filing should contact the Secretary (202–205–2000).

Any person desiring to submit a document to the Commission in confidence must request confidential treatment. All such requests should be directed to the Secretary to the Commission and must include a full statement of the reasons why the Commission should grant such treatment. *See* 19 CFR 201.6. Documents for which confidential treatment by the Commission is properly sought will be treated accordingly. All nonconfidential written submissions will be available for public inspection at the Office of the Secretary.

This action is taken under the authority of section 337 of the Tariff Act of 1930, as amended (19 U.S.C. 1337), and of sections 201.10 and 210.50(a)(4) of the Commission's Rules of Practice and Procedure (19 CFR 201.10, 210.50(a)(4)).

By order of the Commission.

Issued: July 26, 2011.

James R. Holbein,

Secretary to the Commission.

[FR Doc. 2011–19355 Filed 7–29–11; 8:45 am]

BILLING CODE 7020–02–P

INTERNATIONAL TRADE COMMISSION

[Investigation Nos. 701–TA–442–443 and 731–TA–1095–1097 (Review)]

Certain Lined Paper School Supplies From China, India, and Indonesia—Institution of Five-Year Reviews Concerning the Countervailing Duty Orders on Certain Lined Paper School Supplies From India and Indonesia and the Antidumping Duty Orders on Certain Lined Paper School Supplies From China, India, and Indonesia

AGENCY: United States International Trade Commission.

ACTION: Notice.

SUMMARY: The Commission hereby gives notice that it has instituted reviews pursuant to section 751(c) of the Tariff Act of 1930 (19 U.S.C. 1675(c)) (the Act) to determine whether revocation of the countervailing duty orders on certain lined paper school supplies from India and Indonesia and the antidumping duty orders on certain lined paper school supplies from China, India, and Indonesia would be likely to lead to continuation or recurrence of material injury. Pursuant to section 751(c)(2) of the Act, interested parties are requested to respond to this notice by submitting the information specified below to the Commission;[1] to be assured of consideration, the deadline for responses is August 31, 2011. Comments on the adequacy of responses may be filed with the Commission by October 14, 2011. For further information concerning the conduct of these reviews and rules of general application, consult the Commission's Rules of Practice and Procedure, part 201, subparts A through E (19 CFR part 201), and part 207, subparts A, D, E, and F (19 CFR part 207), as most recently amended at 74 FR 2847 (January 16, 2009).

DATED: *Effective Date:* August 1, 2011.

FOR FURTHER INFORMATION CONTACT: Mary Messer (202–205–3193), Office of Investigations, U.S. International Trade Commission, 500 E Street, SW., Washington, DC 20436. Hearing-impaired persons can obtain information on this matter by contacting the Commission's TDD terminal on 202–205–1810. Persons with mobility impairments who will need special assistance in gaining access to the Commission should contact the Office of the Secretary at 202–205–2000. General information concerning the Commission may also be obtained by accessing its Internet server (*http://www.usitc.gov*). The public record for these reviews may be viewed on the Commission's electronic docket (EDIS) at *http://edis.usitc.gov.*

SUPPLEMENTARY INFORMATION: *Background.*—On September 28, 2006, the Department of Commerce (''Commerce'') issued countervailing duty orders on certain lined paper school supplies from India and Indonesia and antidumping duty orders on certain lined paper school supplies from China, India, and Indonesia (71 FR 56949). On April 14, 2011, Commerce amended in part the antidumping duty order on subject imports from India (76 FR 20954). The Commission is conducting reviews to determine whether revocation of the orders would be likely to lead to continuation or recurrence of material injury to the domestic industry within a reasonably foreseeable time. It will assess the adequacy of interested party responses to this notice of institution to determine whether to conduct full or expedited reviews. The Commission's determinations in any expedited reviews will be based on the facts available, which may include information provided in response to this notice.

Definitions.—The following definitions apply to these reviews:

(1) *Subject Merchandise* is the class or kind of merchandise that is within the scope of the five-year reviews, as defined by the Department of Commerce.

(2) The *Subject Countries* in these reviews are China, India, and Indonesia.

(3) The *Domestic Like Product* is the domestically produced product or products which are like, or in the absence of like, most similar in characteristics and uses with, the *Subject Merchandise.* In its original determinations, the Commission found one *Domestic Like Product* consisting of all lined paper products, regardless of dimension.

(4) The *Domestic Industry* is the U.S. producers as a whole of the *Domestic Like Product,* or those producers whose collective output of the *Domestic Like Product* constitutes a major proportion of the total domestic production of the product. In its original determinations, the Commission found one *Domestic Industry* consisting of all domestic producers of lined paper products. The Commission also found during the original investigations that circumstances were appropriate to exclude two domestic producers, American Scholar and CPP, from the domestic industry under the related parties provision.

(5) The *Order Date* is the date that the antidumping and countervailing duty orders under review became effective. In these reviews, the *Order Date* is September 28, 2006.

(6) An *Importer* is any person or firm engaged, either directly or through a parent company or subsidiary, in importing the *Subject Merchandise* into the United States from a foreign manufacturer or through its selling agent.

Participation in the reviews and public service list.—Persons, including industrial users of the *Subject Merchandise* and, if the merchandise is sold at the retail level, representative consumer organizations, wishing to participate in the reviews as parties must file an entry of appearance with the Secretary to the Commission, as provided in section 201.11(b)(4) of the Commission's rules, no later than 21 days after publication of this notice in

[1] No response to this request for information is required if a currently valid Office of Management and Budget (OMB) number is not displayed; the OMB number is 3117–0016/USITC No. 11–5–254, expiration date June 30, 2014. Public reporting burden for the request is estimated to average 15 hours per response. Please send comments regarding the accuracy of this burden estimate to the Office of Investigations, U.S. International Trade Commission, 500 E Street, SW., Washington, DC 20436.

the **Federal Register.** The Secretary will maintain a public service list containing the names and addresses of all persons, or their representatives, who are parties to the reviews.

Former Commission employees who are seeking to appear in Commission five-year reviews are advised that they may appear in a review even if they participated personally and substantially in the corresponding underlying original investigation. The Commission's designated agency ethics official has advised that a five-year review is not considered the ''same particular matter'' as the corresponding underlying original investigation for purposes of 18 U.S.C. 207, the post employment statute for Federal employees, and Commission rule 201.15(b) (19 CFR 201.15(b)), 73 FR 24609 (May 5, 2008). This advice was developed in consultation with the Office of Government Ethics. Consequently, former employees are not required to seek Commission approval to appear in a review under Commission rule 19 CFR 201.15, even if the corresponding underlying original investigation was pending when they were Commission employees. For further ethics advice on this matter, contact Carol McCue Verratti, Deputy Agency Ethics Official, at 202–205–3088.

Limited disclosure of business proprietary information (BPI) under an administrative protective order (APO) and APO service list.—Pursuant to section 207.7(a) of the Commission's rules, the Secretary will make BPI submitted in these reviews available to authorized applicants under the APO issued in the reviews, provided that the application is made no later than 21 days after publication of this notice in the **Federal Register**. Authorized applicants must represent interested parties, as defined in 19 U.S.C. 1677(9), who are parties to the reviews. A separate service list will be maintained by the Secretary for those parties authorized to receive BPI under the APO.

Certification.—Pursuant to section 207.3 of the Commission's rules, any person submitting information to the Commission in connection with these reviews must certify that the information is accurate and complete to the best of the submitter's knowledge. In making the certification, the submitter will be deemed to consent, unless otherwise specified, for the Commission, its employees, and contract personnel to use the information provided in any other reviews or investigations of the same or comparable products which the Commission conducts under Title VII of the Act, or in internal audits and investigations relating to the programs and operations of the Commission pursuant to 5 U.S.C. Appendix 3.

Written submissions.—Pursuant to section 207.61 of the Commission's rules, each interested party response to this notice must provide the information specified below. The deadline for filing such responses is August 31, 2011. Pursuant to section 207.62(b) of the Commission's rules, eligible parties (as specified in Commission rule 207.62(b)(1)) may also file comments concerning the adequacy of responses to the notice of institution and whether the Commission should conduct expedited or full reviews. The deadline for filing such comments is October 14, 2011. All written submissions must conform with the provisions of sections 201.8 and 207.3 of the Commission's rules and any submissions that contain BPI must also conform with the requirements of sections 201.6 and 207.7 of the Commission's rules. The Commission's rules do not authorize filing of submissions with the Secretary by facsimile or electronic means, except to the extent permitted by section 201.8 of the Commission's rules, as amended, 67 FR 68036 (November 8, 2002). Also, in accordance with sections 201.16(c) and 207.3 of the Commission's rules, each document filed by a party to the reviews must be served on all other parties to the reviews (as identified by either the public or APO service list as appropriate), and a certificate of service must accompany the document (if you are not a party to the reviews you do not need to serve your response).

Inability to provide requested information.—Pursuant to section 207.61(c) of the Commission's rules, any interested party that cannot furnish the information requested by this notice in the requested form and manner shall notify the Commission at the earliest possible time, provide a full explanation of why it cannot provide the requested information, and indicate alternative forms in which it can provide equivalent information. If an interested party does not provide this notification (or the Commission finds the explanation provided in the notification inadequate) and fails to provide a complete response to this notice, the Commission may take an adverse inference against the party pursuant to section 776(b) of the Act in making its determinations in the reviews.

INFORMATION TO BE PROVIDED IN RESPONSE TO THIS NOTICE OF INSTITUTION: If you are a domestic producer, union/worker group, or trade/business association; import/export *Subject Merchandise* from more than one *Subject Country;* or produce *Subject Merchandise* in more than one *Subject Country,* you may file a single response. If you do so, please ensure that your response to each question includes the information requested for each pertinent *Subject Country.* As used below, the term ''firm'' includes any related firms.

(1) The name and address of your firm or entity (including World Wide Web address) and name, telephone number, fax number, and E-mail address of the certifying official.

(2) A statement indicating whether your firm/entity is a U.S. producer of the *Domestic Like Product,* a U.S. union or worker group, a U.S. importer of the *Subject Merchandise,* a foreign producer or exporter of the *Subject Merchandise,* a U.S. or foreign trade or business association, or another interested party (including an explanation). If you are a union/worker group or trade/business association, identify the firms in which your workers are employed or which are members of your association.

(3) A statement indicating whether your firm/entity is willing to participate in these reviews by providing information requested by the Commission.

(4) A statement of the likely effects of the revocation of the antidumping and countervailing duty orders on the *Domestic Industry* in general and/or your firm/entity specifically. In your response, please discuss the various factors specified in section 752(a) of the Act (19 U.S.C. § 1675a(a)) including the likely volume of subject imports, likely price effects of subject imports, and likely impact of imports of *Subject Merchandise* on the *Domestic Industry.*

(5) A list of all known and currently operating U.S. producers of the *Domestic Like Product.* Identify any known related parties and the nature of the relationship as defined in section 771(4)(B) of the Act (19 U.S.C. 1677(4)(B)).

(6) A list of all known and currently operating U.S. importers of the *Subject Merchandise* and producers of the *Subject Merchandise* in each *Subject Country* that currently export or have exported *Subject Merchandise* to the United States or other countries since the *Order Date.*

(7) A list of 3–5 leading purchasers in the U.S. market for the *Domestic Like Product* and the *Subject Merchandise* (including street address, World Wide Web address, and the name, telephone number, fax number, and E-mail address of a responsible official at each firm).

(8) A list of known sources of information on national or regional prices for the *Domestic Like Product* or

the *Subject Merchandise* in the U.S. or other markets.

(9) If you are a U.S. producer of the *Domestic Like Product,* provide the following information on your firm's operations on that product during calendar year 2010, except as noted (report quantity data in pieces and value data in U.S. dollars, f.o.b. plant). If you are a union/worker group or trade/business association, provide the information, on an aggregate basis, for the firms in which your workers are employed/which are members of your association.

(a) Production (quantity) and, if known, an estimate of the percentage of total U.S. production of the *Domestic Like Product* accounted for by your firm's(s') production;

(b) Capacity (quantity) of your firm to produce the *Domestic Like Product* (i.e., the level of production that your establishment(s) could reasonably have expected to attain during the year, assuming normal operating conditions (using equipment and machinery in place and ready to operate), normal operating levels (hours per week/weeks per year), time for downtime, maintenance, repair, and cleanup, and a typical or representative product mix);

(c) the quantity and value of U.S. commercial shipments of the *Domestic Like Product* produced in your U.S. plant(s);

(d) the quantity and value of U.S. internal consumption/company transfers of the *Domestic Like Product* produced in your U.S. plant(s); and

(e) the value of (i) net sales, (ii) cost of goods sold (COGS), (iii) gross profit, (iv) selling, general and administrative (SG&A) expenses, and (v) operating income of the *Domestic Like Product* produced in your U.S. plant(s) (include both U.S. and export commercial sales, internal consumption, and company transfers) for your most recently completed fiscal year (identify the date on which your fiscal year ends).

(10) If you are a U.S. importer or a trade/business association of U.S. importers of the *Subject Merchandise* from the *Subject Country(ies),* provide the following information on your firm's(s') operations on that product during calendar year 2010 (report quantity data in pieces and value data in U.S. dollars). If you are a trade/business association, provide the information, on an aggregate basis, for the firms which are members of your association.

(a) The quantity and value (landed, duty-paid but not including antidumping or countervailing duties) of U.S. imports and, if known, an estimate of the percentage of total U.S. imports of *Subject Merchandise* from each *Subject Country* accounted for by your firm's(s') imports;

(b) the quantity and value (f.o.b. U.S. port, including antidumping and/or countervailing duties) of U.S. commercial shipments of *Subject Merchandise* imported from each *Subject Country;* and

(c) the quantity and value (f.o.b. U.S. port, including antidumping and/or countervailing duties) of U.S. internal consumption/company transfers of *Subject Merchandise* imported from each *Subject Country.*

(11) If you are a producer, an exporter, or a trade/business association of producers or exporters of the *Subject Merchandise* in the *Subject Country(ies),* provide the following information on your firm's(s') operations on that product during calendar year 2010 (report quantity data in pieces and value data in U.S. dollars, landed and duty-paid at the U.S. port but not including antidumping or countervailing duties). If you are a trade/business association, provide the information, on an aggregate basis, for the firms which are members of your association.

(a) Production (quantity) and, if known, an estimate of the percentage of total production of *Subject Merchandise* in each *Subject Country* accounted for by your firm's(s') production;

(b) Capacity (quantity) of your firm to produce the *Subject Merchandise* in each *Subject Country* (i.e., the level of production that your establishment(s) could reasonably have expected to attain during the year, assuming normal operating conditions (using equipment and machinery in place and ready to operate), normal operating levels (hours per week/weeks per year), time for downtime, maintenance, repair, and cleanup, and a typical or representative product mix); and

(c) the quantity and value of your firm's(s') exports to the United States of *Subject Merchandise* and, if known, an estimate of the percentage of total exports to the United States of *Subject Merchandise* from each *Subject Country* accounted for by your firm's(s') exports.

(12) Identify significant changes, if any, in the supply and demand conditions or business cycle for the *Domestic Like Product* that have occurred in the United States or in the market for the *Subject Merchandise* in the *Subject Country(ies)* since the *Order Date,* and significant changes, if any, that are likely to occur within a reasonably foreseeable time. Supply conditions to consider include technology; production methods; development efforts; ability to increase production (including the shift of production facilities used for other products and the use, cost, or availability of major inputs into production); and factors related to the ability to shift supply among different national markets (including barriers to importation in foreign markets or changes in market demand abroad). Demand conditions to consider include end uses and applications; the existence and availability of substitute products; and the level of competition among the *Domestic Like Product* produced in the United States, *Subject Merchandise* produced in the *Subject Country(ies),* and such merchandise from other countries.

(13) (OPTIONAL) A statement of whether you agree with the above definitions of the *Domestic Like Product* and *Domestic Industry;* if you disagree with either or both of these definitions, please explain why and provide alternative definitions.

Authority: This review is being conducted under authority of title VII of the Tariff Act of 1930; this notice is published pursuant to section 207.61 of the Commission's rules.

By order of the Commission.
Issued: July 26, 2011.

James R. Holbein,
Secretary to the Commission.

[FR Doc. 2011–19314 Filed 7–29–11; 8:45 am]
BILLING CODE 7020–02–P

INTERNATIONAL TRADE COMMISSION

[Investigation Nos. 731–TA–344 and 391A–393A (Third Review)]

Certain Bearings From China, France, Germany, and Italy; Institution of Five-Year Reviews Concerning the Antidumping Duty Orders on Certain Bearings From China, France, Germany, and Italy

AGENCY: United States International Trade Commission.

ACTION: Notice.

SUMMARY: The Commission hereby gives notice that it has instituted reviews pursuant to section 751(c) of the Tariff Act of 1930 (19 U.S.C. 1675(c)) (the Act) to determine whether revocation of the antidumping duty orders on certain bearings from China, France, Germany, and Italy would be likely to lead to continuation or recurrence of material injury. Pursuant to section 751(c)(2) of the Act, interested parties are requested to respond to this notice by submitting the information specified below to the

Commission;[1] to be assured of consideration, the deadline for responses is August 31, 2011. Comments on the adequacy of responses may be filed with the Commission by October 14, 2011. For further information concerning the conduct of these reviews and rules of general application, consult the Commission's Rules of Practice and Procedure, part 201, subparts A through E (19 CFR part 201), and part 207, subparts A, D, E, and F (19 CFR part 207), as most recently amended at 74 FR 2847 (January 16, 2009).

DATES: *Effective Date:* August 1, 2011.

FOR FURTHER INFORMATION CONTACT: Mary Messer (202–205–3193), Office of Investigations, U.S. International Trade Commission, 500 E Street SW., Washington, DC 20436. Hearing-impaired persons can obtain information on this matter by contacting the Commission's TDD terminal on 202–205–1810. Persons with mobility impairments who will need special assistance in gaining access to the Commission should contact the Office of the Secretary at 202–205–2000. General information concerning the Commission may also be obtained by accessing its internet server (*http://www.usitc.gov*). The public record for these reviews may be viewed on the Commission's electronic docket (EDIS) at *http://edis.usitc.gov.*

SUPPLEMENTARY INFORMATION: *Background.* On June 15, 1987, the Department of Commerce (''Commerce'') issued an antidumping duty order on imports of tapered roller bearings from China (52 FR 22667). On May 15, 1989, Commerce issued antidumping duty orders on imports of ball bearings from France, Germany, and Italy (54 FR 20900, 20902, and 20903). Following first and second five-year reviews by Commerce and the Commission, effective July 11, 2000 and September 15, 2006, respectively, Commerce issued continuations of the antidumping duty orders on imports of certain bearings from China, France, Germany, and Italy (65 FR 42665 and 71 FR 54469). The Commission is now conducting third reviews to determine whether revocation of the orders would be likely to lead to continuation or recurrence of material injury to the domestic industry within a reasonably foreseeable time. It will assess the adequacy of interested party responses to this notice of institution to determine whether to conduct full or expedited reviews. The Commission's determinations in any expedited reviews will be based on the facts available, which may include information provided in response to this notice.

Definitions. The following definitions apply to these reviews:

(1) *Subject Merchandise* is the class or kind of merchandise that is within the scope of the five-year reviews, as defined by the Department of Commerce.

(2) The *Subject Countries* in these reviews are China, France, Germany, and Italy.

(3) The *Domestic Like Product* is the domestically produced product or products which are like, or in the absence of like, most similar in characteristics and uses with, the *Subject Merchandise.* In its original determination concerning tapered roller bearings from China (Investigation No. 731–TA–344), the Commission found one *Domestic Like Product:* tapered roller bearings and parts thereof—finished or unfinished; flange, take-up cartridge, and hanger units incorporating tapered roller bearings, and tapered roller housings (except pillow blocks) incorporating tapered rollers, with or without spindles, and whether or not for automotive use. In its original determinations concerning ball bearings from France, Germany, and Italy (Investigation Nos. 731–TA–391A–393A), the Commission found ball bearings to be a single *Domestic Like Product.* One Commissioner defined the *Domestic Like Product* differently in the original ball bearings final determinations. In its full first and second five-year review determinations concerning the existing orders on certain bearings, the Commission defined ball bearings and tapered roller bearings as separate *Domestic Like Products,* coextensive with Commerce's scope definitions for each type of bearing. For purposes of this notice, you should report information separately on each of the following two *Domestic Like Products:* (1) ball bearings and (2) tapered roller bearings.

(4) The *Domestic Industry* is the U.S. producers as a whole of the *Domestic Like Product,* or those producers whose collective output of the *Domestic Like Product* constitutes a major proportion of the total domestic production of the product. In its original determination concerning tapered roller bearings from China (Inv. No. 731–TA–344), the Commission found one *Domestic Industry* devoted to the production of the *Domestic Like Product,* as defined above. In its original determinations concerning ball bearings from France, Germany, and Italy (Investigation Nos. 731–TA–391A–393A), the Commission found one *Domestic Industry* devoted to the production of ball bearings. One Commissioner defined the *Domestic Industry* differently in the original ball bearings final determinations. In its full first and second five-year review determinations concerning the existing orders on tapered roller bearings and ball bearings, the Commission found two separate *Domestic Industries,* each devoted to the production of one of the two *Domestic Like Products,* as defined above. For purposes of this notice, you should report information on two *Domestic Industries,* each devoted to the production of one of the following two *Domestic Like Products:* (1) Ball bearings and (2) tapered roller bearings.

(5) An *Importer* is any person or firm engaged, either directly or through a parent company or subsidiary, in importing the *Subject Merchandise* into the United States from a foreign manufacturer or through its selling agent.

Participation in the reviews and public service list.—Persons, including industrial users of the *Subject Merchandise* and, if the merchandise is sold at the retail level, representative consumer organizations, wishing to participate in the reviews as parties must file an entry of appearance with the Secretary to the Commission, as provided in section 201.11(b)(4) of the Commission's rules, no later than 21 days after publication of this notice in the **Federal Register**. The Secretary will maintain a public service list containing the names and addresses of all persons, or their representatives, who are parties to the reviews.

Former Commission employees who are seeking to appear in Commission five-year reviews are advised that they may appear in a review even if they participated personally and substantially in the corresponding underlying original investigation. The Commission's designated agency ethics official has advised that a five-year review is not considered the ''same particular matter'' as the corresponding underlying original investigation for purposes of 18 U.S.C. 207, the post employment statute for Federal employees, and Commission rule 201.15(b)(19 CFR 201.15(b)), 73 FR 24609 (May 5, 2008). This advice was developed in consultation with the Office of Government Ethics. Consequently, former employees are not

[1] No response to this request for information is required if a currently valid Office of Management and Budget (OMB) number is not displayed; the OMB number is 3117–0016/USITC No. 11–5–253, expiration date June 30, 2014. Public reporting burden for the request is estimated to average 15 hours per response. Please send comments regarding the accuracy of this burden estimate to the Office of Investigations, U.S. International Trade Commission, 500 E Street, SW., Washington, DC 20436.

required to seek Commission approval to appear in a review under Commission rule 19 CFR 201.15, even if the corresponding underlying original investigation was pending when they were Commission employees. For further ethics advice on this matter, contact Carol McCue Verratti, Deputy Agency Ethics Official, at 202–205–3088.

Limited disclosure of business proprietary information (BPI) under an administrative protective order (APO) and APO service list. Pursuant to section 207.7(a) of the Commission's rules, the Secretary will make BPI submitted in these reviews available to authorized applicants under the APO issued in the reviews, provided that the application is made no later than 21 days after publication of this notice in the **Federal Register**. Authorized applicants must represent interested parties, as defined in 19 U.S.C. 1677(9), who are parties to the reviews. A separate service list will be maintained by the Secretary for those parties authorized to receive BPI under the APO.

Certification. Pursuant to section 207.3 of the Commission's rules, any person submitting information to the Commission in connection with these reviews must certify that the information is accurate and complete to the best of the submitter's knowledge. In making the certification, the submitter will be deemed to consent, unless otherwise specified, for the Commission, its employees, and contract personnel to use the information provided in any other reviews or investigations of the same or comparable products which the Commission conducts under Title VII of the Act, or in internal audits and investigations relating to the programs and operations of the Commission pursuant to 5 U.S.C. Appendix 3.

Written submissions. Pursuant to section 207.61 of the Commission's rules, each interested party response to this notice must provide the information specified below. The deadline for filing such responses is August 31, 2011. Pursuant to section 207.62(b) of the Commission's rules, eligible parties (as specified in Commission rule 207.62(b)(1)) may also file comments concerning the adequacy of responses to the notice of institution and whether the Commission should conduct expedited or full reviews. The deadline for filing such comments is October 25, 2011. All written submissions must conform with the provisions of sections 201.8 and 207.3 of the Commission's rules and any submissions that contain BPI must also conform with the requirements of sections 201.6 and 207.7 of the Commission's rules. The Commission's rules do not authorize filing of submissions with the Secretary by facsimile or electronic means, except to the extent permitted by section 201.8 of the Commission's rules, as amended, 67 FR 68036 (November 8, 2002). Also, in accordance with sections 201.16(c) and 207.3 of the Commission's rules, each document filed by a party to the reviews must be served on all other parties to the reviews (as identified by either the public or APO service list as appropriate), and a certificate of service must accompany the document (if you are not a party to the reviews you do not need to serve your response).

Inability to provide requested information. Pursuant to section 207.61(c) of the Commission's rules, any interested party that cannot furnish the information requested by this notice in the requested form and manner shall notify the Commission at the earliest possible time, provide a full explanation of why it cannot provide the requested information, and indicate alternative forms in which it can provide equivalent information. If an interested party does not provide this notification (or the Commission finds the explanation provided in the notification inadequate) and fails to provide a complete response to this notice, the Commission may take an adverse inference against the party pursuant to section 776(b) of the Act in making its determinations in the reviews.

Information To Be Provided in Response to this Notice of Institution: Please provide the requested information separately for each *Domestic Like Product,* as defined by the Commission in its determinations, and for each of the products identified by Commerce as *Subject Merchandise.* If you are a domestic producer, union/worker group, or trade/business association; import/export *Subject Merchandise* from more than one *Subject Country;* or produce *Subject Merchandise* in more than one *Subject Country,* you may file a single response. If you do so, please ensure that your response to each question includes the information requested for each pertinent *Subject Country.* As used below, the term ''firm'' includes any related firms.

(1) The name and address of your firm or entity (including World Wide Web address) and name, telephone number, fax number, and E-mail address of the certifying official.

(2) A statement indicating whether your firm/entity is a U.S. producer of a *Domestic Like Product,* a U.S. union or worker group, a U.S. importer of the *Subject Merchandise,* a foreign producer or exporter of the *Subject Merchandise,* a U.S. or foreign trade or business association, or another interested party (including an explanation). If you are a union/worker group or trade/business association, identify the firms in which your workers are employed or which are members of your association.

(3) A statement indicating whether your firm/entity is willing to participate in these reviews by providing information requested by the Commission.

(4) A statement of the likely effects of the revocation of the antidumping duty orders on the *Domestic Industries* in general and/or your firm/entity specifically. In your response, please discuss the various factors specified in section 752(a) of the Act (19 U.S.C. 1675a(a)) including the likely volume of subject imports, likely price effects of subject imports, and likely impact of imports of *Subject Merchandise* on the *Domestic Industries.*

(5) A list of all known and currently operating U.S. producers of each *Domestic Like Product.* Identify any known related parties and the nature of the relationship as defined in section 771(4)(B) of the Act (19 U.S.C. 1677(4)(B)).

(6) A list of all known and currently operating U.S. importers of the *Subject Merchandise* and producers of the *Subject Merchandise* in each *Subject Country* that currently export or have exported *Subject Merchandise* to the United States or other countries after 2005.

(7) A list of 3–5 leading purchasers in the U.S. market for each *Domestic Like Product* and the *Subject Merchandise* (including street address, World Wide Web address, and the name, telephone number, fax number, and E-mail address of a responsible official at each firm).

(8) A list of known sources of information on national or regional prices for each *Domestic Like Product* or the *Subject Merchandise* in the U.S. or other markets.

(9) If you are a U.S. producer of a *Domestic Like Product,* provide the following information on your firm's operations on that product during calendar year 2010, except as noted (report quantity data in units and value data in U.S. dollars, f.o.b. plant). If you are a union/worker group or trade/business association, provide the information, on an aggregate basis, for the firms in which your workers are employed/which are members of your association.

(a) Production (quantity) and, if known, an estimate of the percentage of total U.S. production of each *Domestic*

Like Product accounted for by your firm's(s') production;

(b) Capacity (quantity) of your firm to produce each *Domestic Like Product* (i.e., the level of production that your establishment(s) could reasonably have expected to attain during the year, assuming normal operating conditions (using equipment and machinery in place and ready to operate), normal operating levels (hours per week/weeks per year), time for downtime, maintenance, repair, and cleanup, and a typical or representative product mix);

(c) the quantity and value of U.S. commercial shipments of each *Domestic Like Product* produced in your U.S. plant(s);

(d) the quantity and value of U.S. internal consumption/company transfers of each *Domestic Like Product* produced in your U.S. plant(s); and

(e) the value of (i) net sales, (ii) cost of goods sold (COGS), (iii) gross profit, (iv) selling, general and administrative (SG&A) expenses, and (v) operating income of each *Domestic Like Product* produced in your U.S. plant(s) (include both U.S. and export commercial sales, internal consumption, and company transfers) for your most recently completed fiscal year (identify the date on which your fiscal year ends).

(10) If you are a U.S. importer or a trade/business association of U.S. importers of the *Subject Merchandise* from the *Subject Country(ies),* provide the following information on your firm's(s') operations on that product during calendar year 2010 (report quantity data in units and value data in U.S. dollars). If you are a trade/business association, provide the information, on an aggregate basis, for the firms which are members of your association.

(a) The quantity and value (landed, duty-paid but not including antidumping duties) of U.S. imports and, if known, an estimate of the percentage of total U.S. imports of *Subject Merchandise* from each *Subject Country* accounted for by your firm's(s') imports;

(b) the quantity and value (f.o.b. U.S. port, including antidumping duties) of U.S. commercial shipments of *Subject Merchandise* imported from each *Subject Country;* and

(c) the quantity and value (f.o.b. U.S. port, including antidumping duties) of U.S. internal consumption/company transfers of *Subject Merchandise* imported from each *Subject Country.*

(11) If you are a producer, an exporter, or a trade/business association of producers or exporters of the *Subject Merchandise* in the *Subject Country(ies),* provide the following information on your firm's(s') operations on that product during calendar year 2010 (report quantity data in units and value data in U.S. dollars, landed and duty-paid at the U.S. port but not including antidumping duties). If you are a trade/business association, provide the information, on an aggregate basis, for the firms which are members of your association.

(a) Production (quantity) and, if known, an estimate of the percentage of total production of *Subject Merchandise* in each *Subject Country* accounted for by your firm's(s') production;

(b) Capacity (quantity) of your firm to produce the *Subject Merchandise* in each *Subject Country* (i.e., the level of production that your establishment(s) could reasonably have expected to attain during the year, assuming normal operating conditions (using equipment and machinery in place and ready to operate), normal operating levels (hours per week/weeks per year), time for downtime, maintenance, repair, and cleanup, and a typical or representative product mix); and

(c) the quantity and value of your firm's(s') exports to the United States of *Subject Merchandise* and, if known, an estimate of the percentage of total exports to the United States of *Subject Merchandise* from each *Subject Country* accounted for by your firm's(s') exports.

(12) Identify significant changes, if any, in the supply and demand conditions or business cycle for the *Domestic Like Products* that have occurred in the United States or in the market for the *Subject Merchandise* in the *Subject Countries* after 2005, and significant changes, if any, that are likely to occur within a reasonably foreseeable time. Supply conditions to consider include technology; production methods; development efforts; ability to increase production (including the shift of production facilities used for other products and the use, cost, or availability of major inputs into production); and factors related to the ability to shift supply among different national markets (including barriers to importation in foreign markets or changes in market demand abroad). Demand conditions to consider include end uses and applications; the existence and availability of substitute products; and the level of competition among the *Domestic Like Products* produced in the United States, *Subject Merchandise* produced in the *Subject Countries,* and such merchandise from other countries.

(13) (OPTIONAL) A statement of whether you agree with the above definitions of the *Domestic Like Products and Domestic Industries;* if you disagree with either or both of these definitions, please explain why and provide alternative definitions.

Authority: These reviews are being conducted under authority of title VII of the Tariff Act of 1930; this notice is published pursuant to section 207.61 of the Commission's rules.

Issued: July 26, 2011.

By order of the Commission.

James R. Holbein,

Secretary to the Commission.

[FR Doc. 2011–19318 Filed 7–29–11; 8:45 am]

BILLING CODE 7020–02–P

INTERNATIONAL TRADE COMMISSION

[Investigation Nos. 731–TA–671–673 (Third Review)]

Silicomanganese From Brazil, China, and Ukraine Institution of a Five-Year Review Concerning the Antidumping Duty Orders on Silicomanganese From Brazil, China, and Ukraine

AGENCY: United States International Trade Commission.

ACTION: Notice.

SUMMARY: The Commission hereby gives notice that it has instituted reviews pursuant to section 751(c) of the Tariff Act of 1930 (19 U.S.C. 1675(c)) (the Act) to determine whether revocation of the antidumping duty orders on silicomanganese from Brazil, China, and Ukraine would be likely to lead to continuation or recurrence of material injury. Pursuant to section 751(c)(2) of the Act, interested parties are requested to respond to this notice by submitting the information specified below to the Commission;[1] to be assured of consideration, the deadline for responses is August 31, 2011. Comments on the adequacy of responses may be filed with the Commission by October 14, 2011. For further information concerning the conduct of these reviews and rules of general application, consult the Commission's Rules of Practice and Procedure, part 201, subparts A through E (19 CFR part 201), and part 207, subparts A, D, E, and F (19 CFR part 207), as most recently amended at 74 FR 2847 (January 16, 2009).

DATES: *Effective Date:* August 1, 2011.

[1] No response to this request for information is required if a currently valid Office of Management and Budget (OMB) number is not displayed; the OMB number is 3117–0016/USITC No. 11–5–255, expiration date June 30, 2011. Public reporting burden for the request is estimated to average 15 hours per response. Please send comments regarding the accuracy of this burden estimate to the Office of Investigations, U.S. International Trade Commission, 500 E Street, SW., Washington, DC 20436.

FOR FURTHER INFORMATION CONTACT: Mary Messer (202–205–3193), Office of Investigations, U.S. International Trade Commission, 500 E Street, SW., Washington, DC 20436. Hearing-impaired persons can obtain information on this matter by contacting the Commission's TDD terminal on 202–205–1810. Persons with mobility impairments who will need special assistance in gaining access to the Commission should contact the Office of the Secretary at 202–205–2000. General information concerning the Commission may also be obtained by accessing its internet server (*http://www.usitc.gov*). The public record for these reviews may be viewed on the Commission's electronic docket (EDIS) at *http://edis.usitc.gov.*

SUPPLEMENTARY INFORMATION:

Background.—On October 31, 1994, the Department of Commerce (''Commerce'') suspended an antidumping duty investigation on imports of silicomanganese from Ukraine (59 FR 60951, November 29, 1994). On December 22, 1994, Commerce issued antidumping duty orders on imports of silicomanganese from Brazil and China (59 FR 66003). Following first five-year reviews by Commerce and the Commission, effective February 16, 2001, Commerce issued a continuation of the antidumping duty orders on imports of silicomanganese from Brazil and China and the suspended investigation on imports of silicomanganese from Ukraine (66 FR 10669). On July 19, 2001, the Government of Ukraine requested termination of the suspension agreement on silicomanganese from Ukraine and, effective September 17, 2001, Commerce issued an antidumping duty order (66 FR 43838, August 21, 2001). Following second five-year reviews by Commerce and the Commission, effective September 14, 2006, Commerce issued a continuation of the antidumping duty orders on imports of silicomanganese from Brazil, China, and Ukraine (71 FR 54272). The Commission is now conducting third reviews to determine whether revocation of the orders would be likely to lead to continuation or recurrence of material injury to the domestic industry within a reasonably foreseeable time. It will assess the adequacy of interested party responses to this notice of institution to determine whether to conduct full or expedited reviews. The Commission's determinations in any expedited reviews will be based on the facts available, which may include information provided in response to this notice.

Definitions.—The following definitions apply to these reviews:

(1) *Subject Merchandise* is the class or kind of merchandise that is within the scope of the five-year reviews, as defined by the Department of Commerce.

(2) The *Subject Countries* in these reviews are Brazil, China, and Ukraine.

(3) The *Domestic Like Product* is the domestically produced product or products which are like, or in the absence of like, most similar in characteristics and uses with, the *Subject Merchandise.* In its original determinations, its full first five-year review determinations, and its expedited second five-year review determinations, the Commission defined the *Domestic Like Product* as all silicomanganese, coextensive with Commerce's scope.

(4) The *Domestic Industry* is the U.S. producers as a whole of the *Domestic Like Product,* or those producers whose collective output of the *Domestic Like Product* constitutes a major proportion of the total domestic production of the product. In its original determinations, its full first five-year review determinations, and its expedited second five-year review determinations, the Commission defined the *Domestic Industry* as all domestic producers of silicomanganese.

(5) An *Importer* is any person or firm engaged, either directly or through a parent company or subsidiary, in importing the *Subject Merchandise* into the United States from a foreign manufacturer or through its selling agent.

Participation in the reviews and public service list.—Persons, including industrial users of the *Subject Merchandise* and, if the merchandise is sold at the retail level, representative consumer organizations, wishing to participate in the reviews as parties must file an entry of appearance with the Secretary to the Commission, as provided in section 201.11(b)(4) of the Commission's rules, no later than 21 days after publication of this notice in the **Federal Register.** The Secretary will maintain a public service list containing the names and addresses of all persons, or their representatives, who are parties to the reviews.

Former Commission employees who are seeking to appear in Commission five-year reviews are advised that they may appear in a review even if they participated personally and substantially in the corresponding underlying original investigation. The Commission's designated agency ethics official has advised that a five-year review is not considered the ''same particular matter'' as the corresponding underlying original investigation for purposes of 18 U.S.C. 207, the post employment statute for Federal employees, and Commission rule 201.15(b) (19 CFR 201.15(b)), 73 FR 24609 (May 5, 2008). This advice was developed in consultation with the Office of Government Ethics. Consequently, former employees are not required to seek Commission approval to appear in a review under Commission rule 19 CFR § 201.15, even if the corresponding underlying original investigation was pending when they were Commission employees. For further ethics advice on this matter, contact Carol McCue Verratti, Deputy Agency Ethics Official, at 202–205–3088.

Limited disclosure of business proprietary information (BPI) under an administrative protective order (APO) and APO service list.—Pursuant to section 207.7(a) of the Commission's rules, the Secretary will make BPI submitted in these reviews available to authorized applicants under the APO issued in the reviews, provided that the application is made no later than 21 days after publication of this notice in the **Federal Register**. Authorized applicants must represent interested parties, as defined in 19 U.S.C. 1677(9), who are parties to the reviews. A separate service list will be maintained by the Secretary for those parties authorized to receive BPI under the APO.

Certification.—Pursuant to section 207.3 of the Commission's rules, any person submitting information to the Commission in connection with these reviews must certify that the information is accurate and complete to the best of the submitter's knowledge. In making the certification, the submitter will be deemed to consent, unless otherwise specified, for the Commission, its employees, and contract personnel to use the information provided in any other reviews or investigations of the same or comparable products which the Commission conducts under Title VII of the Act, or in internal audits and investigations relating to the programs and operations of the Commission pursuant to 5 U.S.C. Appendix 3.

Written submissions.—Pursuant to section 207.61 of the Commission's rules, each interested party response to this notice must provide the information specified below. The deadline for filing such responses is August 31, 2011. Pursuant to section 207.62(b) of the Commission's rules, eligible parties (as specified in Commission rule 207.62(b)(1)) may also file comments

concerning the adequacy of responses to the notice of institution and whether the Commission should conduct expedited or full reviews. The deadline for filing such comments is October 14, 2011. All written submissions must conform with the provisions of sections 201.8 and 207.3 of the Commission's rules and any submissions that contain BPI must also conform with the requirements of sections 201.6 and 207.7 of the Commission's rules. The Commission's rules do not authorize filing of submissions with the Secretary by facsimile or electronic means, except to the extent permitted by section 201.8 of the Commission's rules, as amended, 67 FR 68036 (November 8, 2002). Also, in accordance with sections 201.16(c) and 207.3 of the Commission's rules, each document filed by a party to the reviews must be served on all other parties to the reviews (as identified by either the public or APO service list as appropriate), and a certificate of service must accompany the document (if you are not a party to the reviews you do not need to serve your response).

Inability to provide requested information.—Pursuant to section 207.61(c) of the Commission's rules, any interested party that cannot furnish the information requested by this notice in the requested form and manner shall notify the Commission at the earliest possible time, provide a full explanation of why it cannot provide the requested information, and indicate alternative forms in which it can provide equivalent information. If an interested party does not provide this notification (or the Commission finds the explanation provided in the notification inadequate) and fails to provide a complete response to this notice, the Commission may take an adverse inference against the party pursuant to section 776(b) of the Act in making its determinations in the reviews.

INFORMATION TO BE PROVIDED IN RESPONSE TO THIS NOTICE OF INSTITUTION: If you are a domestic producer, union/worker group, or trade/business association; import/export *Subject Merchandise* from more than one *Subject Country;* or produce *Subject Merchandise* in more than one *Subject Country,* you may file a single response. If you do so, please ensure that your response to each question includes the information requested for each pertinent *Subject Country.* As used below, the term ''firm'' includes any related firms.

(1) The name and address of your firm or entity (including World Wide Web address) and name, telephone number, fax number, and E-mail address of the certifying official.

(2) A statement indicating whether your firm/entity is a U.S. producer of the *Domestic Like Product,* a U.S. union or worker group, a U.S. importer of the *Subject Merchandise,* a foreign producer or exporter of the *Subject Merchandise,* a U.S. or foreign trade or business association, or another interested party (including an explanation). If you are a union/worker group or trade/business association, identify the firms in which your workers are employed or which are members of your association.

(3) A statement indicating whether your firm/entity is willing to participate in these reviews by providing information requested by the Commission.

(4) A statement of the likely effects of the revocation of the antidumping duty orders on the Domestic Industry in general and/or your firm/entity specifically. In your response, please discuss the various factors specified in section 752(a) of the Act (19 U.S.C. 1675a(a)) including the likely volume of subject imports, likely price effects of subject imports, and likely impact of imports of *Subject Merchandise* on the *Domestic Industry.*

(5) A list of all known and currently operating U.S. producers of the *Domestic Like Product.* Identify any known related parties and the nature of the relationship as defined in section 771(4)(B) of the Act (19 U.S.C. 1677(4)(B)).

(6) A list of all known and currently operating U.S. importers of the *Subject Merchandise* and producers of the *Subject Merchandise* in each *Subject Country* that currently export or have exported *Subject Merchandise* to the United States or other countries after 2005.

(7) A list of 3–5 leading purchasers in the U.S. market for the *Domestic Like Product* and the *Subject Merchandise* (including street address, World Wide Web address, and the name, telephone number, fax number, and E-mail address of a responsible official at each firm).

(8) A list of known sources of information on national or regional prices for the *Domestic Like Product* or the *Subject Merchandise* in the U.S. or other markets.

(9) If you are a U.S. producer of the *Domestic Like Product,* provide the following information on your firm's operations on that product during calendar year 2010, except as noted (report quantity data in short tons and value data in U.S. dollars, f.o.b. plant). If you are a union/worker group or trade/business association, provide the information, on an aggregate basis, for the firms in which your workers are employed/which are members of your association.

(a) Production (quantity) and, if known, an estimate of the percentage of total U.S. production of the *Domestic Like Product* accounted for by your firm's(s') production;

(b) Capacity (quantity) of your firm to produce the *Domestic Like Product* (i.e., the level of production that your establishment(s) could reasonably have expected to attain during the year, assuming normal operating conditions (using equipment and machinery in place and ready to operate), normal operating levels (hours per week/weeks per year), time for downtime, maintenance, repair, and cleanup, and a typical or representative product mix);

(c) the quantity and value of U.S. commercial shipments of the *Domestic Like Product* produced in your U.S. plant(s);

(d) the quantity and value of U.S. internal consumption/company transfers of the *Domestic Like Product* produced in your U.S. plant(s); and

(e) the value of (i) net sales, (ii) cost of goods sold (COGS), (iii) gross profit, (iv) selling, general and administrative (SG&A) expenses, and (v) operating income of the *Domestic Like Product* produced in your U.S. plant(s) (include both U.S. and export commercial sales, internal consumption, and company transfers) for your most recently completed fiscal year (identify the date on which your fiscal year ends).

(10) If you are a U.S. importer or a trade/business association of U.S. importers of the *Subject Merchandise* from the *Subject Country(ies),* provide the following information on your firm's(s') operations on that product during calendar year 2010 (report quantity data in short tons and value data in U.S. dollars). If you are a trade/business association, provide the information, on an aggregate basis, for the firms which are members of your association.

(a) The quantity and value (landed, duty-paid but not including antidumping duties) of U.S. imports and, if known, an estimate of the percentage of total U.S. imports of *Subject Merchandise* from each *Subject Country* accounted for by your firm's(s') imports;

(b) the quantity and value (f.o.b. U.S. port, including antidumping duties) of U.S. commercial shipments of *Subject Merchandise* imported from each *Subject Country;* and

(c) the quantity and value (f.o.b. U.S. port, including antidumping duties) of U.S. internal consumption/company transfers of *Subject Merchandise* imported from each *Subject Country.*

(11) If you are a producer, an exporter, or a trade/business association of producers or exporters of the *Subject Merchandise* in the *Subject Country(ies),* provide the following information on your firm's(s') operations on that product during calendar year 2010 (report quantity data in short tons and value data in U.S. dollars, landed and duty-paid at the U.S. port but not including antidumping duties). If you are a trade/business association, provide the information, on an aggregate basis, for the firms which are members of your association.

(a) Production (quantity) and, if known, an estimate of the percentage of total production of *Subject Merchandise* in each *Subject Country* accounted for by your firm's(s') production;

(b) Capacity (quantity) of your firm to produce the *Subject Merchandise* in each *Subject Country* (i.e., the level of production that your establishment(s) could reasonably have expected to attain during the year, assuming normal operating conditions (using equipment and machinery in place and ready to operate), normal operating levels (hours per week/weeks per year), time for downtime, maintenance, repair, and cleanup, and a typical or representative product mix); and

(c) the quantity and value of your firm's(s') exports to the United States of *Subject Merchandise* and, if known, an estimate of the percentage of total exports to the United States of *Subject Merchandise* from each *Subject Country* accounted for by your firm's(s') exports.

(12) Identify significant changes, if any, in the supply and demand conditions or business cycle for the *Domestic Like Product* that have occurred in the United States or in the market for the *Subject Merchandise* in the *Subject Country(ies)* after 2005, and significant changes, if any, that are likely to occur within a reasonably foreseeable time. Supply conditions to consider include technology; production methods; development efforts; ability to increase production (including the shift of production facilities used for other products and the use, cost, or availability of major inputs into production); and factors related to the ability to shift supply among different national markets (including barriers to importation in foreign markets or changes in market demand abroad). Demand conditions to consider include end uses and applications; the existence and availability of substitute products; and the level of competition among the *Domestic Like Product* produced in the United States, *Subject Merchandise* produced in the *Subject Country(ies),* and such merchandise from other countries.

(13) (OPTIONAL) A statement of whether you agree with the above definitions of the *Domestic Like Product* and *Domestic Industry;* if you disagree with either or both of these definitions, please explain why and provide alternative definitions.

Authority: These reviews are being conducted under authority of title VII of the Tariff Act of 1930; this notice is published pursuant to section 207.61 of the Commission's rules.

By order of the Commission.

Issued: July 26, 2011.

James R. Holbein,

Secretary to the Commission.

[FR Doc. 2011–19315 Filed 7–29–11; 8:45 am]

BILLING CODE 7020–02–P

INTERNATIONAL TRADE COMMISSION

[Inv. No. 337–TA–795]

In the Matter of Certain Video Analytics Software, Systems, Components Thereof, and Products Containing Same; Notice of Institution of Investigation; Institution of Investigation Pursuant to 19 U.S.C. 1337

AGENCY: U.S. International Trade Commission.

ACTION: Notice.

SUMMARY: Notice is hereby given that a complaint was filed with the U.S. International Trade Commission on June 29, 2011, under section 337 of the Tariff Act of 1930, as amended, 19 U.S.C. 1337, on behalf of ObjectVideo, Inc. of Reston, Virginia. The complaint alleges violations of section 337 based upon the importation into the United States, the sale for importation, and the sale within the United States after importation of certain video analytics software, systems, components thereof, and products containing same by reason of infringement of certain claims of U.S. Patent No 6,696,945 (''the '945 patent''); U.S. Patent No. 6,970,083 (''the '083 patent''); U.S. Patent No. 7,613,324 (''the '324 patent''); U.S. Patent No. 7,424,175 (''the '175 patent''); U.S. Patent No. 7,868,912 (''the '912 patent''); and U.S. Patent No. 7,932,923 (''the '923 patent''). The complaint further alleges that an industry in the United States exists as required by subsection (a)(2) of section 337.

The complainant requests that the Commission institute an investigation and, after the investigation, issue an exclusion order and cease and desist orders.

ADDRESSES: The complaint, except for any confidential information contained therein, is available for inspection during official business hours (8:45 a.m. to 5:15 p.m.) in the Office of the Secretary, U.S. International Trade Commission, 500 E Street, SW., Room 112, Washington, DC 20436, telephone (202) 205–2000. Hearing impaired individuals are advised that information on this matter can be obtained by contacting the Commission's TDD terminal on (202) 205–1810. Persons with mobility impairments who will need special assistance in gaining access to the Commission should contact the Office of the Secretary at (202) 205–2000. General information concerning the Commission may also be obtained by accessing its internet server at *http://www.usitc.gov.* The public record for this investigation may be viewed on the Commission's electronic docket (EDIS) at *http://edis.usitc.gov.*

FOR FURTHER INFORMATION CONTACT: The Office of Unfair Import Investigations, U.S. International Trade Commission, telephone (202) 205–2560.

Authority: The authority for institution of this investigation is contained in section 337 of the Tariff Act of 1930, as amended, and in section 210.10 of the Commission's Rules of Practice and Procedure, 19 CFR 210.10 (2011).

Scope of Investigation: Having considered the complaint, the U.S. International Trade Commission, on July 26, 2011, *ordered that*—

(1) Pursuant to subsection (b) of section 337 of the Tariff Act of 1930, as amended, an investigation be instituted to determine whether there is a violation of subsection (a)(1)(B) of section 337 in the importation into the United States, the sale for importation, or the sale within the United States after importation of certain video analytics software, systems, components thereof, and products containing same that infringe one or more of claims 1–8, 11–14, 17, and 24–37 of the '945 patent; claims 1–28 of the '083 patent; claims 1–3, 6, and 7 of the '324; claims 2 and 3 of the '175 patent; claims 1–3 and 6–22 of the '912 patent; and claims 1–7, 9–13, and 15–28 of the '923 patent, and whether an industry in the United States exists as required by subsection (a)(2) of section 337;

(2) For the purpose of the investigation so instituted, the following are hereby named as parties upon which this notice of investigation shall be served:

(a) The complainant is: ObjectVideo, Inc., 11600 Sunrise Valley Drive, Suite 290, Reston, VA 20191.

(b) The respondents are the following entities alleged to be in violation of

section 337, and are the parties upon which the complaint is to be served:

Robert Bosch GmbH, Postfach 106050, D–70049 Stuttgart, Germany.

Bosch Security Systems, Inc., 130 Perinton Parkway, Fairpoint, NY 14450–9107.

Samsung Techwin Co., Ltd., 657–9, Yeoksam-Dong, Kangnam-gu, Seoul 135–080, Korea.

Samsung Opto-Electronics America, Inc. (d/b/a Samsung Techwin America, Inc.), 100 Challenger Road, Suite 700, Ridgefield Park, NJ 07660.

Sony Corporation, 1–7–1 Konan, Minato-ku, Tokyo 108–0075, Japan.

Sony Electronics, Inc., 16530 Via Esprillo, San Diego, CA 92127.

(c) The Office of Unfair Import Investigations, U.S. International Trade Commission, 500 E Street, SW., Suite 401, Washington, DC 20436; and

(3) For the investigation so instituted, the Chief Administrative Law Judge, U.S. International Trade Commission, shall designate the presiding Administrative Law Judge.

Responses to the complaint and the notice of investigation must be submitted by the named respondents in accordance with section 210.13 of the Commission's Rules of Practice and Procedure, 19 CFR 210.13. Pursuant to 19 CFR 201.16(d)–(e) and 210.13(a), such responses will be considered by the Commission if received not later than 20 days after the date of service by the Commission of the complaint and the notice of investigation. Extensions of time for submitting responses to the complaint and the notice of investigation will not be granted unless good cause therefor is shown.

Failure of a respondent to file a timely response to each allegation in the complaint and in this notice may be deemed to constitute a waiver of the right to appear and contest the allegations of the complaint and this notice, and to authorize the administrative law judge and the Commission, without further notice to the respondent, to find the facts to be as alleged in the complaint and this notice and to enter an initial determination and a final determination containing such findings, and may result in the issuance of an exclusion order or a cease and desist order or both directed against the respondent.

By order of the Commission.

Issued: July 27, 2011.

James R. Holbein,

Secretary to the Commission.

[FR Doc. 2011–19357 Filed 7–29–11; 8:45 am]

BILLING CODE 7020–02–P

INTERNATIONAL TRADE COMMISSION

[Inv. No. 337–TA–794]

In the Matter of Certain Electronic Devices, Including Wireless Communication Devices, Portable Music and Data Processing Devices, and Tablet Computers; Notice of Institution of Investigation; Institution of Investigation Pursuant to 19 U.S.C. 1337

AGENCY: U.S. International Trade Commission.

ACTION: Notice.

SUMMARY: Notice is hereby given that a complaint was filed with the U.S. International Trade Commission on June 28, 2011, under section 337 of the Tariff Act of 1930, as amended, 19 U.S.C. 1337, on behalf of Samsung Electronics Co., Ltd. of Korea and Samsung Telecommunications America, LLC of Richardson, Texas. Supplements were filed on July 7 and July 15, 2011. The complaint alleges violations of section 337 based upon the importation into the United States, the sale for importation, and the sale within the United States after importation of certain electronic devices, including wireless communication devices, portable music and data processing devices, and tablet computers by reason of infringement of certain claims of U.S. Patent No. 7,706,348 (''the '348 patent''); U.S. Patent No. 7,486,644 (''the '644 patent''); U.S. Patent No. 6,771,980 (''the '980 patent''); U.S. Patent No. 6,879,843 (''the '843 patent''); and U.S. Patent No. 7,450,114 (''the '114 patent''). The complaint further alleges that an industry in the United States exists or is in the process of being established as required by subsection (a)(2) of section 337.

The complainants request that the Commission institute an investigation and, after the investigation, issue an exclusion order and a cease and desist order.

ADDRESSES: The complaint and supplements, except for any confidential information contained therein, are available for inspection during official business hours (8:45 a.m. to 5:15 p.m.) in the Office of the Secretary, U.S. International Trade Commission, 500 E Street, SW., Room 112, Washington, DC 20436, telephone (202) 205–2000. Hearing impaired individuals are advised that information on this matter can be obtained by contacting the Commission's TDD terminal on (202) 205–1810. Persons with mobility impairments who will need special assistance in gaining access to the Commission should contact the Office of the Secretary at (202) 205–2000. General information concerning the Commission may also be obtained by accessing its internet server at *http://www.usitc.gov.* The public record for this investigation may be viewed on the Commission's electronic docket (EDIS) at *http://edis.usitc.gov.*

FOR FURTHER INFORMATION CONTACT: The Office of Unfair Import Investigations, U.S. International Trade Commission, telephone (202) 205–2560.

Authority: The authority for institution of this investigation is contained in section 337 of the Tariff Act of 1930, as amended, and in section 210.10 of the Commission's Rules of Practice and Procedure, 19 CFR 210.10 (2011).

Scope of Investigation: Having considered the complaint, the U.S. International Trade Commission, on July 26, 2011, *ordered that*—

(1) Pursuant to subsection (b) of section 337 of the Tariff Act of 1930, as amended, an investigation be instituted to determine whether there is a violation of subsection (a)(1)(B) of section 337 in the importation into the United States, the sale for importation, or the sale within the United States after importation of certain electronic devices, including wireless communication devices, portable music and data processing devices, and tablet computers that infringe one or more of claims 75–78 and 82–84 of the '348 patent; claims 9–16 of the '644 patent; claims 5–7 and 9–13 of the '980 patent; claims 1–11 of the '843 patent; and claims 1–5 of the '114 patent, and whether an industry in the United States exists as required by subsection (a)(2) of section 337;

(2) For the purpose of the investigation so instituted, the following are hereby named as parties upon which this notice of investigation shall be served:

(a) The complainants are:

Samsung Electronics Co., Ltd., 416 Maetan-3dong, Yeongtong-gu, Suwon-City, Gyeonggi-do, Korea 443–742;

Samsung Telecommunications America, LLC, 1301 East Lookout Drive, Richardson, TX 75082.

(b) The respondent is the following entity alleged to be in violation of section 337, and is the party upon which the complaint is to be served: Apple Inc., 1 Infinite Loop, Cupertino, CA 95014.

(c) The Office of Unfair Import Investigations, U.S. International Trade Commission, 500 E Street, SW., Suite 401, Washington, DC 20436; and

(3) For the investigation so instituted the Chief Administrative Law Judge, U.S. International Trade Commission, shall designate the presiding Administrative Law Judge.

Responses to the complaint and the notice of investigation must be submitted by the named respondent in accordance with section 210.13 of the Commission's Rules of Practice and Procedure, 19 CFR 210.13. Pursuant to 19 CFR 201.16(d)–(e) and 210.13(a), such responses will be considered by the Commission if received not later than 20 days after the date of service by the Commission of the complaint and the notice of investigation. Extensions of time for submitting responses to the complaint and the notice of investigation will not be granted unless good cause therefor is shown.

Failure of the respondent to file a timely response to each allegation in the complaint and in this notice may be deemed to constitute a waiver of the right to appear and contest the allegations of the complaint and this notice, and to authorize the administrative law judge and the Commission, without further notice to the respondent, to find the facts to be as alleged in the complaint and this notice and to enter an initial determination and a final determination containing such findings, and may result in the issuance of an exclusion order or a cease and desist order or both directed against the respondent.

By order of the Commission.

Issued: July 27, 2011.

James R. Holbein,

Secretary to the Commission.

[FR Doc. 2011–19356 Filed 7–29–11; 8:45 am]

BILLING CODE 7020–02–P

DEPARTMENT OF JUSTICE

[OMB Number 1122–New]

Agency Information Collection Activities: New Collection; Semi-Annual Progress Report for Grantees from the Children and Youth Exposed to Violence Program

ACTION: 30-Day Notice of Information Collection Under Review.

The Department of Justice, Office on Violence Against Women (OVW) will be submitting the following information collection request to the Office of Management and Budget (OMB) for review and approval in accordance with the Paperwork Reduction Act of 1995. The proposed information collection is published to obtain comments from the public and affected agencies. This proposed information collection was previously published in the **Federal Register** Volume 76, Number 101, page 30389, on May 25, 2011, allowing for a 60-day comment period.

The purpose of this notice is to allow for an additional 30 days for public comment until August 31, 2011. This process is conducted in accordance with 5 CFR 1320.10.

Written comments concerning this information collection should be sent to the Office of Information and Regulatory Affairs, Office of Management and Budget, *Attn:* DOJ Desk Officer. The best way to ensure your comments are received is to e-mail them to *oira_submission@omb.eop.gov* or fax them to 202–395–7285. All comments should reference the 8 digit OMB number for the collection or the title of the collection. If you have questions concerning the collection, please call Cathy Poston at 202–514–5430 or the DOJ Desk Officer at 202–395–3176.

Written comments and suggestions from the public and affected agencies concerning the proposed collection of information are encouraged. Your comments should address one or more of the following four points:

(1) Evaluate whether the proposed collection of information is necessary for the proper performance of the functions of the agency, including whether the information will have practical utility;

(2) Evaluate the accuracy of the agency's estimate of the burden of the proposed collection of information, including the validity of the methodology and assumptions used;

(3) Enhance the quality, utility, and clarity of the information to be collected; and

(4) Minimize the burden of the collection of information on those who are to respond, including through the use of appropriate automated, electronic, mechanical, or other technological collection techniques or other forms of information technology, *e.g.,* permitting electronic submission of responses.

Overview of This Information Collection

(1) *Type of Information Collection:* New collection.

(2) *Title of the Form/Collection:* Semi-Annual Progress Report for Grantees from the Children and Youth Exposed to Violence Program.

(3) *Agency form number, if any, and the applicable component of the Department of Justice sponsoring the collection:* Form Number: 1122–XXXX. U.S. Department of Justice, Office on Violence Against Women.

(4) Affected public who will be asked or required to respond, as well as a brief abstract: The affected public includes the approximately 25 grantees of the Children and Youth Exposed to Violence Program, created by the *Violence Against Women Act of 2005* (VAWA 2005), creates a unique opportunity for communities to increase the resources, services, and advocacy available to children, youth and their nonabusing parent or caretaker, when a child has been exposed to incidences of sexual assault, domestic violence, dating violence, or stalking.

(5) An estimate of the total number of respondents and the amount of time estimated for an average respondent to respond/reply: It is estimated that it will take the approximately 25 respondents (grantees from the Children and Youth Exposed to Violence Program) approximately one hour to complete a semi-annual progress report. The semi-annual progress report is divided into sections that pertain to the different types of activities in which grantees may engage. A Children and Youth Exposed to Violence Program grantee will only be required to complete the sections of the form that pertain to its own specific activities.

(6) An estimate of the total public burden (in hours) associated with the collection: The total annual hour burden to complete the data collection forms is 50 hours, that is 25 grantees completing a form twice a year with an estimated completion time for the form being one hour.

If additional information is required contact: Jerri Murray, Department Clearance Officer, United States Department of Justice, Justice Management Division, Policy and Planning Staff, Two Constitution Square, 145 N Street, NE., Room 2E–508, Washington, DC 20530.

Jerri Murray,

Department Clearance Officer, United States Department of Justice.

[FR Doc. 2011–19345 Filed 7–29–11; 8:45 am]

BILLING CODE 4410–FX–P

DEPARTMENT OF JUSTICE

[OMB Number 1103–NEW]

Agency Information Collection Activities: Proposed Collection; Comments Requested; Generic Information Collection Review of Customer Outreach and Information

ACTION: 30-Day Notice of Information Collection Under Review.

The Department of Justice (DOJ) Office of Community Oriented Policing Services (COPS) will be submitting the following information collection request to the Office of Management and Budget (OMB) for review and approval in accordance with the Paperwork Reduction Act of 1995. The proposed information collection is published to obtain comments from the public and affected agencies. This information collection was previously published in the **Federal Register** Volume 76, Number 101, on May 25, 2011, allowing for a 60-day comment period.

The purpose of this notice is to allow for 30 days for public comment until August 31, 2011. This process is conducted in accordance with 5 CFR 1320.10.

Written comments concerning this information collection should be sent to the Office of Information and Regulatory Affairs, Office of Management and Budget, Attn: DOJ Desk Officer. The best way to ensure your comments are received is to e-mail them to *oira_submission@omb.eop.gov* or fax them to 202–395–7285. All comments should reference the 8 digit OMB number for the collection or the title of the collection. If you have questions concerning the collection, please call Ashley Hoornstra at (202) 616–1314 or the DOJ Desk Officer at 202–395–3176.

If you have comments especially on the estimated public burden or associated response time, suggestions, or need a copy of the proposed information collection instrument with instructions or additional information, please contact Ashley Hoornstra, Department of Justice Office of Community Oriented Policing Services, 145 N Street, NE., Washington, DC 20530.

Written comments and suggestions from the public and affected agencies concerning the proposed collection of information are encouraged. Your comments should address one or more of the following four points:

—Evaluate whether the proposed collection of information is necessary for the proper performance of the functions of the agency, including whether the information will have practical utility;
—Evaluate the accuracy of the agency's estimate of the burden of the proposed collection of information, including the validity of the methodology and assumptions used;
—Enhance the quality, utility, and clarity of the information to be collected; and
—Minimize the burden of the collection of information on those who are to respond, including through the use of appropriate automated, electronic, mechanical, or other technological collection techniques or other forms of information technology, *e.g.,* permitting electronic submission of responses.

Overview of This Information Collection

(1) *Type of Information Collection:* Proposed collection; comments requested.

(2) *Title of the Form/Collection:* Generic Information Collection Review of Customer Outreach and Information.

(3) *Agency form number, if any, and the applicable component of the Department sponsoring the collection:* None. U.S. Department of Justice Office of Community Oriented Policing Services.

(4) *Affected public who will be asked or required to respond, as well as a brief abstract:* Primary: Law enforcement and public safety agencies, institutions of higher learning and non-profit organizations.

(5) *An estimate of the total number of respondents and the amount of time estimated for an average respondent to respond/reply:* It is estimated that approximately 2000 respondents will participate in the survey annually in an average of 28 minutes.

(6) *An estimate of the total public burden (in hours) associated with the collection:* 933 total burden hours.

If additional information is required contact: Jerri Murray, Department Clearance Officer, United States Department of Justice, Justice Management Division, Policy and Planning Staff, Two Constitution Square, 145 N Street, NE., Room 2E–508, Washington, DC 20530.

Jerri Murray,

Department Clearance Officer, PRA, U.S. Department of Justice.

[FR Doc. 2011–19371 Filed 7–29–11; 8:45 am]

BILLING CODE 4410–AT–P

DEPARTMENT OF JUSTICE

[OMB Number 1122—New]

Agency Information Collection Activities: New Collection; Semi-Annual Progress Report for Grantees From the Services, Training, Education and Policies To Reduce Domestic Violence, Dating Violence, Sexual Assault and Stalking in Secondary Schools Grant Program

ACTION: 30-Day Notice of Information Collection Under Review.

The Department of Justice, Office on Violence Against Women (OVW) will be submitting the following information collection request to the Office of Management and Budget (OMB) for review and approval in accordance with the Paperwork Reduction Act of 1995. The proposed information collection is published to obtain comments from the public and affected agencies. This proposed information collection was previously published in the **Federal Register** Volume 76, Number 101, page 30388–30389, on May 25, 2011, allowing for a 60-day comment period.

The purpose of this notice is to allow for an additional 30 days for public comment until August 31, 2011. This process is conducted in accordance with 5 CFR 1320.10.

Written comments concerning this information collection should be sent to the Office of Information and Regulatory Affairs, Office of Management and Budget, *Attn:* DOJ Desk Officer. The best way to ensure your comments are received is to e-mail them to *oira_submission@omb.eop.gov* or fax them to 202–395–7285. All comments should reference the 8 digit OMB number for the collection or the title of the collection. If you have questions concerning the collection, please call Cathy Poston at 202–514–5430 or the DOJ Desk Officer at 202–395–3176.

Written comments and suggestions from the public and affected agencies concerning the proposed collection of information are encouraged. Your comments should address one or more of the following four points:

(1) Evaluate whether the proposed collection of information is necessary for the proper performance of the functions of the agency, including whether the information will have practical utility;

(2) Evaluate the accuracy of the agency's estimate of the burden of the proposed collection of information, including the validity of the methodology and assumptions used;

(3) Enhance the quality, utility, and clarity of the information to be collected; and

(4) Minimize the burden of the collection of information on those who are to respond, including through the use of appropriate automated, electronic, mechanical, or other technological collection techniques or other forms of information technology, *e.g.,* permitting electronic submission of responses.

Overview of This Information Collection

(1) *Type of Information Collection:* New collection.

(2) *Title of the Form/Collection:* Semi-Annual Progress Report for Grantees from the Services, Training, Education and Policies to Reduce Domestic Violence, Dating Violence, Sexual Assault and Stalking in Secondary Schools Grant Program (STEP).

(3) *Agency form number, if any, and the applicable component of the Department of Justice sponsoring the collection:* Form Number: 1122–XXXX. U.S. Department of Justice, Office on Violence Against Women.

(4) Affected public who will be asked or required to respond, as well as a brief abstract: The affected public includes the approximately 10 grantees of the STEP Program. The STEP Program, created by the *Violence Against Women Act of 2005* (VAWA 2005), will support middle and high schools to develop and implement effective training, services, prevention strategies, policies, and coordinated community responses for student victims of domestic violence, dating violence, sexual assault, or stalking.

(5) An estimate of the total number of respondents and the amount of time estimated for an average respondent to respond/reply: It is estimated that it will take the approximately 10 respondents (grantees from the STEP Program) approximately one hour to complete a semi-annual progress report. The semi-annual progress report is divided into sections that pertain to the different types of activities in which grantees may engage. A STEP Program grantee will only be required to complete the sections of the form that pertain to its own specific activities.

(6) An estimate of the total public burden (in hours) associated with the collection: The total annual hour burden to complete the data collection forms is 20 hours, that is 10 grantees completing a form twice a year with an estimated completion time for the form being one hour.

If additional information is required contact: Jerri Murray, Department Clearance Officer, United States Department of Justice, Justice Management Division, Policy and Planning Staff, Two Constitution Square, 145 N Street, NE., Room 2E–508, Washington, DC 20530.

Jerri Murray,

Department Clearance Officer, PRA, United States Department of Justice.

[FR Doc. 2011–19346 Filed 7–29–11; 8:45 am]

BILLING CODE 4410–FX–P

DEPARTMENT OF JUSTICE

Bureau of Alcohol, Tobacco, Firearms and Explosives

[OMB Number 1140–0020]

Agency Information Collection Activities; Proposed Collection; Comments Requested: Firearms Transaction Record, Part 1, Over-the-Counter; Extension Without Change of a Currently Approved Information Collection

ACTION: 30-Day Notice and requests for comments.

The Department of Justice (DOJ), Bureau of Alcohol, Tobacco, Firearms and Explosives (ATF) will be submitting the following information collection request to the Office of Management and Budget (OMB) for review and approval in accordance with the Paperwork Reduction Act of 1995. The proposed information collection is published to obtain comments from the public and affected agencies. This proposed information collection was previously published in the **Federal Register** Volume 76, Number 99, page 29791–29792, on May 23, 2011, allowing for a 60 day comment period.

The purpose of this notice is to allow for an additional 30 days for public comment until August 31, 2011. This process is conducted in accordance with 5 CFR 1320.10.

Written comments concerning this information collection should be sent to the Office of Information and Regulatory Affairs, Office of Management and Budget, Attn: DOJ Desk Officer. The best way to ensure your comments are received is to email them to *oria_submission@omb.eop.gov* or fax them to 202–395–7285. All comments should reference the 8 digit OMB number for the collection or the title of the collection. If you have questions concerning the collection, please call Barbara A. Terrell, at 202–648–7122 or the DOJ Desk Officer at 202–395–3176.

Written comments and suggestions from the public and affected agencies concerning the proposed collection of information are encouraged. Your comments should address one or more of the following four points:

—Evaluate whether the proposed collection of information is necessary for the proper performance of the functions of the agency, including whether the information will have practical utility;

—Evaluate the accuracy of the agencies estimate of the burden of the proposed collection of information, including the validity of the methodology and assumptions used;

—Enhance the quality, utility, and clarity of the information to be collected; and

—Minimize the burden of the collection of information on those who are to respond, including through the use of appropriate automated, electronic, mechanical, or other technological collection techniques or other forms of information technology, e.g., permitting electronic submission of responses.

Summary of Collection

(1) *Type of Information Collection:* Extension without change of a currently approved collection.

(2) *Title of the Form/Collection:* Firearms Transaction Record, Part 1, Over-the-Counter.

(3) *Agency form number, if any, and the applicable component of the Department of Justice sponsoring the collection:* Form Number: ATF F 4473 (5300.9) Part 1, Bureau of Alcohol, Tobacco, Firearms and Explosives.

(4) *Affected public who will be asked or required to respond, as well as a brief abstract:* Primary: Individuals or households. Other: Business or other for-profit.

Need for Collection

The form is used to determine the eligibility (under the Gun Control Act) of a person to receive a firearm from a Federal firearm licensee and to establish the identity of the buyer. It is also used in law enforcement investigations/inspections to trace firearms.

(5) *An estimate of the total number of respondents and the amount of time estimated for an average respondent to respond:* ATF estimates that 112,073 respondents will respond to the collection and that the total amount of time to read the instructions and complete the form on average is 25 minutes.

(6) *An estimate of the total burden (in hours) associated with the collection:* ATF estimates 56,037 annual total burden hours associated with this collection.

If additional information is required contact: Jerri Murray at *http://www.DOJ.PRA@usdoj.gov*, Department Clearance Officer, Policy and Planning Staff, Justice Management Division, Department of Justice, Two Constitution Square, 145 N Street, NE., Room 2E–508, Washington, DC 20530.

Jerri Murray,

Department Clearance Officer, PRA, United States Department of Justice.

[FR Doc. 2011–19370 Filed 7–29–11; 8:45 am]

BILLING CODE 4410–FY–P

DEPARTMENT OF JUSTICE

Drug Enforcement Administration

Shannon L. Gallentine, D.P.M.; Denial of Application

On June 25, 2010, the Deputy Assistant Administrator, Office of Diversion Control, Drug Enforcement Administration, issued an Order to Show Cause to Shannon Gallentine, D.P.M. (Respondent), of Maypearl, Texas. The Show Cause Order proposed the denial of Respondent's pending application for a DEA Certificate of Registration as a practitioner, on the grounds that he had materially falsified his application and that his ''registration would be inconsistent with the public interest.'' Show Cause Order at 1 (citing 21 U.S.C. 824(a)(1) & 823 (f)).

With respect to the material falsification ground, the Show Cause Order alleged that on October 1, 2007, Respondent had surrendered his DEA registration. Show Cause Order at 1. The Order further alleged that on July 16, 2009, Respondent had applied for a new DEA registration, but had failed to disclose that he had surrendered his prior registration. *Id.* The Order thus alleged that Respondent had materially falsified his application by failing to disclose the surrender and that this was ground to deny his application. *Id.* (citing 21 U.S.C. 824(a)(1)).

As for the public interest ground, the Show Cause Order alleged that between various dates beginning in May 2004 through September 2007, Respondent prescribed controlled substances to six patients (M.P., H.G., D.C., P.P., K.B., N.B.), ''without a legitimate medical purpose and/or outside the course of professional practice.'' *Id.* at 1–2. The Order further alleged that on October 1, 2007, a federal search warrant was executed at Respondent's registered location and that ''no records were found to adequately support the prescribing of control substances to'' these patients. *Id.* at 2.

As evidenced by the signed return receipt card, on July 2, 2010, the Show Cause Order, which also notified Respondent of his right to request a hearing or to submit a written statement in lieu of a hearing, the procedures for doing either, and the consequences for failing to do either, was served on him. GX 4. Respondent did not, however, file his request for a hearing [1] with the Office of Administrative Law Judges until August 5, 2010, which was three days [2] after it was due. *See* GX 5, at 1; 21 CFR 1301.43(a); *id.* 1316.45.

On August 12, 2010, the ALJ issued an order, a copy of which was not included in the record submitted to this Office. However, based on a subsequent order of the ALJ, it appears that the Government had previously filed a motion to terminate, and that in the initial order, the ALJ had provided Respondent with until August 23rd to file a response to the Government's motion. *See* GX 7, at 1 (Order Adjusting Deadlines for the Filing of Prehearing Statements).

On August 16, 2010, the Government moved to deny Respondent's request for a hearing on the ground that it was untimely. GX 6. Therein, the Government argued that the ALJ does not have jurisdiction to grant a hearing when a hearing request is not timely filed, and that in any event, Respondent had not established ''good cause'' for his untimely filing. *Id.* at 2.

On August 18, 2010, the ALJ issued a new order extending the deadlines for each party to file its prehearing statement. GX 7, at 1 (Order Adjusting Deadlines for the Filing of Prehearing Statements).

On August 23, 2010, Respondent filed a ''Motion To Establish Proceedings.'' GX 8, at 2. Therein, Respondent stated that he did not receive the Government's Motion to Terminate. Respondent further stated that he had received the Order to Show Cause on July 2, 2010, and asserted that he had ''provided a timely request for hearing, dated August 2, 2010.'' *Id.* Respondent further argued that because he did not receive the Government's Motion to Terminate, he ''was not given [an] opportunity to respond to'' the Motion. *Id.*

On August 24, 2010, the ALJ issued an Amended Order Granting the Government's Motion to Terminate Proceedings. *See* GX 10, at 1 (Order Granting Respondent's Request To Stay Termination Of Proceedings And Consenting To Allowance Of Interlocutory Appeal). However, two days later, Respondent filed a Request To Stay Termination Of Proceedings. *Id.* Therein, Respondent stated that he was ''currently in bankruptcy proceedings'' and was ''unable to afford legal counsel.'' GX 9, at 1 (Request To Stay Termination Of Proceedings). Respondent further argued that because he is not an attorney, he ''understood the due date of the request for hearing as needing to be dated within 30 days'' and ''pray[ed that] the court not terminate the proceedings.'' *Id.*

On August 30, 2010, the ALJ granted Respondent's request. Noting that his ruling terminating the proceeding constituted a departure from a prior Agency decision, the ALJ authorized Respondent to file an interlocutory appeal of his Amended Termination Order. GX 10, at 1–2 (Order Granting Respondent's Request To State Termination Of Proceedings And Consenting To Allowance Of Interlocutory Appeal) (citing *Garth A.A. Clark, M.D.,* 63 FR 54733 (1998)). The ALJ further ordered that Respondent file his interlocutory appeal with my Office no later than September 20, 2010; the ALJ also ordered that Respondent serve a copy of his filing on him and Government counsel. *Id.* at 2 & n.2.

Respondent did not, however, file an interlocutory appeal. Instead, on September 20, 2010, Respondent filed a Request for Extension of Time to File an Interlocutory Appeal [and] Request for Appointment of Legal Counsel Due to Financial Hardship. GX 12. Therein, Respondent noted that because he is not an attorney, he ''does not know how to file an interlocutory appeal,'' and sought the appointment of counsel ''because of the financial inability'' to retain counsel. *Id.* Respondent also sought ''an extension of time after appointment of legal counsel in which to file an interlocutory appeal.'' *Id.*

Thereafter, the ALJ denied Respondent's motion for appointed counsel, noting that he lacked authority to do so. GX 11, at 1–2 (Order Denying Respondent's Request for An Extension Of Time To File An Interlocutory Appeal And His Motion For Appointment Of Legal Counsel). The ALJ also denied Respondent's request for an extension, noting that the sole basis for it was to obtain appointed counsel. *Id.* The ALJ further held that because Respondent had failed to file an interlocutory appeal, the stay of the Amended Termination Order ''ha[d] expired by its own terms'' and the Order had ''become[] immediately effective.'' *Id.* at 2.

The Government then filed a Request for Final Agency Action with my Office and submitted various documents as evidence in support of its request. Having considered the record, I conclude that Respondent did not submit a timely request for a hearing as required by 21 CFR 1301.43(a), and that he has not established good cause for his failure to do so. *Id.* 1301.43(d). I therefore find that Respondent has waived his right to a hearing. *Id.*

[1] Respondent's request was dated August 2, 2010.

[2] The thirty-day period for filing a request for a hearing ended on August 1, 2010. However, because that day fell on a Sunday, Respondent's request was not due until August 2, 2010, when the Office of Administrative Law Judges was open for business.

As to the merits, I find that Respondent materially falsified his application for registration; I also find that Respondent's registration ''would be inconsistent with the public interest'' because he issued numerous prescriptions for controlled substances which lacked a legitimate medical purpose and thus violated 21 CFR 1306.04(a). 21 U.S.C. 823(f). Accordingly, Respondent's application will be denied. I make the following findings of fact.

Findings

Respondent is a podiatrist licensed by the Texas State Board of Podiatric Medical Examiners (TSBPME). Respondent previously held DEA Certificate of Registration BG6902919, which authorized him to dispense controlled substances in schedules II through V, as a practitioner, at the registered location of 2700 Pleasant Run Road, Suite 360, Lancaster, Texas.

According to the Affidavit of a DEA Diversion Investigator (DI), on November 6, 2006, DEA received information from the TSBPME which prompted it to investigate Respondent's prescribing practices. During the course of the investigation, Respondent was found to have authorized numerous prescriptions to six patients for narcotics such as codeine with acetaminophen (apap) and hydrocodone/apap, both of which are schedule III controlled substances. 21 CFR 1308.13(e)(1). More specifically, the Investigators obtained records from various pharmacies and found that Respondent had prescribed to: (1) M.P., a total of 4,230 dosage units [hereinafter, d.u.] of codeine/apap from January 3, 2005 through September 14, 2007; (2) H.G., a total of 3,180 d.u. of codeine #4/apap from May 29, 2004 through November 27, 2006; (3) D.C., a total of 2,260 d.u. of hydrocodone/apap from April 4, 2005 through September 18, 2007; (4) P.P., a total of 3,330 d.u. of hydrocodone/apap from January 24, 2005 through January 9, 2007; (5) K.B., a total of 1,500 d.u. of hydrocodone/apap from February 21, 2005 through December 4, 2006; (6) N.B., a total of 1,515 d.u. of hydrocodone/apap from October 4, 2004 through May 3, 2006. GXs 13–18.

On October 1, 2007, federal and state Investigators executed a search warrant at Respondent's registered location of 2700 Pleasant Run Road, Suite 360, Lancaster, Texas. During the course of the search, Respondent stated that no other person had access to his prescription pad and that he personally signed all of his prescriptions. Respondent also stated that he only prescribed hydrocodone to patients who had a traumatic injury.

Moreover, of the six patients identified above, Respondent did not have medical records for H.G., M.P., K.B., and N.B. While Respondent had records for D.C. and P.P., the records for D.C. consisted largely of billing records which listed various conditions and their reimbursement codes, as well as progress notes which were blank except for such information as the date, D.C.'s name, his date of birth, and age. P.P.'s record also consisted largely of billing records and progress notes. Moreover, only one of the progress notes (dated February 19, 2007) documented that P.P. had a medical condition and had pain.[3]

Upon reviewing Respondent's records during the search, DEA Investigators asked Respondent if he would voluntarily surrender his DEA registration. Respondent agreed to do so and executed a form DEA–104, Voluntary Surrender of Controlled Substances Privileges. GX 2, at 5. Therein, Respondent acknowledged that he was voluntarily surrendering his Certificate of Registration, ''[i]n view of [his] alleged failure to comply with the Federal requirements pertaining to controlled substances.'' *Id.* According to an Agency Investigator, ''Respondent was fully aware that the surrender of [his registration] was based upon alleged violations of the Controlled Substances Act.'' Declaration of DI, at 4.

On July 14, 2009, Respondent applied for a new DEA registration. On the application form, Respondent was required to answer four questions. The second of these questions asked: ''Has the applicant ever surrendered (for cause) or had a federal controlled substance registration revoked, suspended, restricted or denied, or is any such action pending?'' Respondent entered ''N'' for no.

Discussion

Section 303(f) of the Controlled Substances Act provides that an application for a practitioner's registration may be denied upon a determination ''that the issuance of such registration would be inconsistent with the public interest.'' 21 U.S.C. 823(f). In making the public interest determination, the CSA requires the consideration of the following factors:

(1) The recommendation of the appropriate State licensing board or professional disciplinary authority.

(2) The applicant's experience in dispensing * * * controlled substances.

(3) The applicant's conviction record under Federal or State laws relating to the manufacture, distribution, or dispensing of controlled substances.

(4) Compliance with applicable State, Federal, or local laws relating to controlled substances.

(5) Such other conduct which may threaten the public health and safety.

Id.

''These factors are * * * considered in the disjunctive.'' *Robert A. Leslie, M.D.,* 68 FR 15227, 15230 (2003). I ''may rely on any one or a combination of factors, and may give each factor the weight [I] deem[] appropriate in determining whether * * * an application for registration [should be] denied.'' *Id.* Moreover, case law establishes that I am ''not required to make findings as to all of the factors.'' *Hoxie* v. *DEA,* 419 F.3d 477, 482 (6th Cir. 2005); *see also Morall* v. *DEA,* 412 F.3d 165, 173–74 (2005).

Furthermore, under Section 304(a)(1), a registration may be revoked or suspended ''upon a finding that the registrant * * * has materially falsified any application filed pursuant to or required by this subchapter.'' 21 U.S.C. 824(a)(1). Under agency precedent, the various grounds for revocation or suspension of an existing registration that Congress enumerated in section 304(a), 21 U.S.C. 824(a), are also properly considered in deciding whether to grant or deny an application under section 303. *See Anthony D. Funches,* 64 FR 14267, 14268 (1999); *Alan R. Schankman,* 63 FR 45260 (1998); *Kuen H. Chen,* 58 FR 65401, 65402 (1993).

Thus, the allegation that Respondent materially falsified his application is properly considered in this proceeding. *See Samuel S. Jackson,* 72 FR 23848, 23852 (2007). Just as materially falsifying an application provides a basis for revoking an existing registration without proof of any other misconduct, *see* 21 U.S.C. 824(a)(1), it also provides an independent and adequate ground for denying an application. *Cf. Bobby Watts, M.D.,* 58 FR 46995 (1993).

The Material Falsification Allegation

As found above, on October 1, 2007, Respondent voluntarily surrendered his registration upon being questioned by Investigators, who were executing a search warrant, regarding whether he had adequate documentation to support the controlled substance prescriptions he issued to six patients. However, on

[3] The records for D.C. and P.P. also contained medication flow sheets listing each patient's prescriptions and refills, some prescriptions, as well as various refill authorization forms sent to Respondent by the patient's pharmacy. For both D.C. and P.P., there were no such records prior to 2007.

his July 14, 2009 application for a new DEA registration, in answering the application's question which asked whether he had previously surrendered for cause his DEA registration, Respondent answered ''no.''

Respondent's answer was a material falsification of his application. As the Supreme Court has explained, ''[t]he most common formulation'' of the concept of materiality ''is that a concealment or misrepresentation is material if it 'has a natural tendency to influence, or was capable of influencing, the decision of' the decisionmaking body to which it was addressed.'' *Kungys* v. *United States,* 485 U.S. 759, 770 (1988) (quoting *Weinstock* v. *United States,* 231 F.2d 699, 701 (D.C. Cir. 1956)) (other citation omitted); *see also United States* v. *Wells,* 519 U.S. 482, 489 (1997) (quoting *Kungys,* 485 U.S. at 770). The evidence must be ''clear, unequivocal, and convincing.'' *Kungys,* 485 U.S. at 772. However, ''the ultimate finding of materiality turns on an interpretation of substantive law.'' *Id.* at 772 (int. quotations and other citation omitted).

DEA has previously held that ''[t]he provision of truthful information on applications is absolutely essential to effectuating [the] statutory purpose'' of determining whether the granting of an application is consistent with the public interest. *See Peter H. Ahles,* 71 FR 50097, 50098 (2006). More specifically, the public interest inquiry under section 303(f) requires, *inter alia,* that the Agency examine ''[t]he applicant's experience in dispensing * * * controlled substances,'' his ''[c]ompliance with applicable State, Federal, or local laws relating to controlled substances,'' and whether he has committed other ''conduct which may threaten public health and safety.'' 21 U.S.C. 823(f). Because Respondent's voluntary surrender was for cause and arose out of an investigation into whether he had violated the Controlled Substance Act by issuing prescriptions outside of the usual course of professional practice and which lacked a legitimate medical purpose, 21 CFR 1306.04(a), his failure to disclose the surrender was capable of influencing the Agency's evaluation of his experience in dispensing controlled substances, his compliance with Federal and State laws relating to controlled substances, and whether he had engaged in other conduct which may threaten public health and safety.

That the Agency did not rely on Respondent's false statement and grant his application does not make the statement immaterial. As the First Circuit has noted with respect to the material falsification requirement under 18 U.S.C. 1001, ''[i]t makes no difference that a specific falsification did not exert influence so long as it had the capacity to do so.'' *United States* v. *Alemany Rivera,* 781 F.2d 229, 234 (1st Cir. 1985). *See also United States* v. *Norris,* 749 F.2d 1116, 1121 (4th Cir. 1984) (''There is no requirement that the false statement influence or effect the decisionmaking process of a department of the United States Government.'').

I further conclude that Respondent's false statement cannot be attributed to a good faith misunderstanding as to whether he had surrendered his registration for cause (as he maintained in his letter requesting a hearing). On the date he completed the application, less than two years had passed since the search warrant was executed and Respondent surrendered his registration. Given the circumstances of the surrender, during which he was confronted with questions by the Investigators about his prescribing practices and lack of documentation to justify his prescriptions, Respondent cannot claim that he did not surrender his registration for cause. Moreover, on the voluntary surrender form, Respondent acknowledged that he was doing so ''[i]n view of [his] alleged failure to comply with the Federal requirements pertaining to controlled substances.'' Accordingly, I conclude that Respondent knew that he had surrendered his registration for cause and that he knowingly materially falsified his July 14, 2009 application for a new Certificate of Registration. This conclusion provides reason alone to deny his application.

The Public Interest Grounds

Having considered all of the public interest factors, I conclude that the evidence with respect to Respondent's experience in dispensing controlled substances (factor two), his compliance with laws related to controlled substances (factor four), and whether he has committed other conduct which may threaten public health and safety (factor five) establishes that Respondent's registration ''would be inconsistent with the public interest.'' [4] 21 U.S.C. 823(f). This conclusion provides an additional ground for denying Respondent's application.

Under a longstanding DEA regulation, a prescription for a controlled substance is not ''effective'' unless it is ''issued for a legitimate medical purpose by an individual practitioner acting in the usual course of his professional practice.'' 21 CFR 1306.04(a). This regulation further provides that ''an order purporting to be a prescription issued not in the usual course of professional treatment * * * is not a prescription within the meaning and intent of [21 U.S.C. 829] and * * * the person issuing it, shall be subject to the penalties provided for violations of the provisions of law related to controlled substances.'' *Id. See also* 21 U.S.C. 802(10) (defining the term ''dispense'' as meaning ''to deliver a controlled substance to an ultimate user by, or pursuant to *the lawful order of, a practitioner,* including the prescribing and administering of a controlled substance'') (emphasis added).

As the Supreme Court has explained, ''the prescription requirement * * * ensures patients use controlled substances under the supervision of a doctor so as to prevent addiction and recreational abuse. As a corollary, [it] also bars doctors from peddling to patients who crave the drugs for those prohibited uses.'' *Gonzales* v. *Oregon,* 546 U.S. 243, 274 (2006) (citing *United States* v. *Moore,* 423 U.S. 122, 135, 143 (1975)). Under the CSA, it is fundamental that a practitioner must establish and maintain a bonafide doctor-patient relationship in order to act ''in the usual course of * * * professional practice'' and to issue a prescription for a ''legitimate medical purpose.'' *Laurence T. McKinney,* 73 FR 43260, 43265 n.22 (2008); *see also Moore,* 423 U.S. at 142–43 (noting that evidence established that physician ''exceeded the bounds of 'professional practice,' '' when ''he gave inadequate physical examinations or none at all,'' ''ignored the results of the tests he did make,'' and ''took no precautions against * * * misuse and diversion''). The CSA, however, generally looks to state law to determine whether a doctor and patient have established a bonafide doctor-patient relationship. *See Kamir Garces-Mejias,* 72 FR 54931, 54935 (2007); *United Prescription Services, Inc.,* 72 FR 50397, 50407–08 (2007).

Under the rules of the Texas State Board of Podiatric Medical Examiners, ''[a]ll podiatric physicians shall make, maintain, and keep accurate records of

[4] I acknowledge that the investigative record contains no evidence that Respondent's state podiatrist's license or state controlled substances registration (factor one) have been suspended or revoked. However, DEA has long held that while possessing state authority is a necessary condition for obtaining and maintaining a DEA registration, the possession of state authority is not dispositive of the public interest. *See Mortimer B. Levin, D.O.,* 55 FR 8209, 8210 (1990). DEA has also held that the absence of a criminal conviction of a Federal or State offense related to the manufacture, distribution, or dispensing of a controlled substance (factor three) is not dispositive. *See Edmund Chein, M.D.,* 72 FR 6580, 6593 n.22 (2007).

the diagnosis made and the treatment performed for and upon each of his or her patients for reference and for protection of the patient for at least five years following the completion of treatment.'' Tex. Admin Code tit. 22, § 375.21(a). When, however, Investigators executed the search warrant at Respondent's registered location, Respondent did not have any medical records for M.P., H.G., K.B., and N.B., even though he had prescribed large quantities of codeine/apap to M.P. (4,230 d.u.) and H.G. (3,180 d.u.) and large quantities of hydrocodone/apap to K.B. (1,500 d.u.) and N.B. (1,515 d.u.). Moreover, Respondent had prescribed to these persons for between a year and a half (in N.B.'s case) and two and a half years (in M.P.'s case). Based on Respondent's failure to maintain any medical records, let alone document a diagnosis to support his prescribing of controlled substances to M.P., H.G., K.B., and N.B., I conclude that Respondent acted outside of the usual course of professional practice and lacked a legitimate medical purpose when he prescribed controlled substances to these patients and thus violated the CSA. 21 U.S.C. 841(a)(1); 21 CFR 1306.04(a). I also conclude that Respondent violated the Texas Board's regulation requiring that he ''make, maintain, and keep accurate records of the diagnosis made and the treatment performed for'' each of these patients. Tex. Admin Code tit. 22, § 375.21(a).

As for D.C., while the Investigators found a medical record, the progress notes did not document a diagnosis and contained no information other than D.C.'s name, date of birth, his age, and the date of the visit. Notwithstanding his failure to document a diagnosis, Respondent issued D.C. prescriptions for 2,260 d.u. of hydrocodone/apap over a nearly two and one half year period. Here again, I conclude that Respondent acted outside of the usual course of professional practice and lacked a legitimate medical purpose in prescribing hydrocodone/apap to D.C. and violated the CSA in doing so. 21 U.S.C. 841(a)(1); 21 CFR 1306.04(a). Here too, Respondent also violated the Texas Board's rule.

While P.P.'s medical record contained a progress note documenting a diagnosis, this note was dated February 19, 2007. However, Respondent had prescribed hydrocodone/apap to her since February 2005, and had authorized the dispensing of more than 3,300 dosage units to her before he even documented a diagnosis. Here again, I conclude that these prescriptions were issued outside of the usual course of professional practice and lacked a legitimate medical purpose and thus violated the CSA. 21 U.S.C. 841(a)(1); 21 CFR 1306.04(a). And here too, Respondent violated the Board's rule by failing to document a diagnosis between February 2005 and February 2007.

I therefore conclude that Respondent's experience in dispensing controlled substances (factor two), his failure to comply with the CSA's prescription requirement, 21 CFR 1306.04(a) (factor four) and his failure to comply with the Texas Board's rule (factor five [5]), establish that Respondent's registration ''would be inconsistent with the public interest.'' 21 U.S.C. 823(f). This conclusion provides an additional and independent ground for denying Respondent's application. Accordingly, Respondent's application for a new DEA Certificate of Registration will be denied.

Order

Pursuant to the authority vested in me by 21 U.S.C. 823(f), as well as 28 CFR 0.100(b), I order that the application of Shannon L. Gallentine, D.P.M., for a DEA Certificate of Registration as a practitioner, be, and it hereby is, denied. This Order is effective immediately.

Dated: July 22, 2011.

Michele M. Leonhart,

Administrator.

[FR Doc. 2011–19381 Filed 7–29–11; 8:45 am]

BILLING CODE 4410–09–P

[5] As the Texas rule states, ''All podiatric physicians shall make, maintain, and keep accurate records of the diagnosis made and the treatment performed for and upon each of his or her patients for reference and *for protection of the patient* for at least five years following the completion of treatment.'' Tex. Admin Code tit. 22, § 375.21(a). DEA has also held that a practitioner's failure to maintain medical records required by state law constitutes such other conduct which may threaten public health and safety. *See Robert L. Dougherty,* 60 FR 55047, 55050–51 (1995).

The Government also asserts that Respondent materially falsified his application for a state controlled substances registration because he failed to disclose the surrender of his DEA registration. Req. for Final Agency Action, at 14. This allegation was not, however, made in the Order to Show Cause, and the ALJ's various orders make clear that the Government did not file a Pre-Hearing Statement, in which it might have provided the requisite notice. *See CBS Wholesale Distributors,* 74 FR 36746, 36749–50 (2009); *see also* 5 U.S.C. § 554(b) (''Persons entitled to notice of an agency hearing shall be timely informed of * * * the matters of fact and law asserted.''). I therefore do not consider it.

DEPARTMENT OF JUSTICE

Drug Enforcement Administration

[Docket No. 10–39]

Michael S. Moore, M.D.; Suspension of Registration

On October 4, 2010, Administrative Law Judge John H. Mulrooney, II, issued the attached recommended decision. Neither party filed exceptions to the decision.

Having reviewed the record in its entirety, I have decided to adopt the ALJ's rulings, findings of fact, and conclusions of law except for his conclusion regarding the applicability of factor five.[1] *See* ALJ Dec. at 21–22.[2] For the reasons explained below, I adopt in part and reject in part the ALJ's recommended order that I suspend Respondent's registration for a period of six months and impose various conditions on his registration. Instead, I conclude that Respondent's registration should be suspended for a period of one year and impose two of the four conditions recommended by the ALJ.

The record in this case establishes that Respondent was convicted of a felony offense under Wisconsin law ''relating to any substance defined in [the Controlled Substances Act] as a controlled substance.'' [3] 21 U.S.C. 824(a)(2). More specifically, Respondent has been convicted of the felony offense of unlawful manufacture, distribution or delivery of ''[t]wo hundred grams or less, or 4 or fewer plants containing tetrahydrocannabinols,'' in violation of Wis. Stat. § 961.41(1)(h)(1). ALJ Dec. at 4. Moreover, while Respondent was allowed to plead no contest to this charge, the evidence showed that Respondent had in his possession at least 1725 grams of marijuana, plus marijuana seeds, four marijuana plants, and the equipment needed to grow

[1] In light of the conduct proved on the record, a finding under factor five is not necessary to conclude that Respondent has committed acts which render his registration inconsistent with the public interest. *See Hoxie* v. *DEA,* 419 F.3d 477, 482 (6th Cir. 2005) (The Agency is ''not required to make findings as to all of the factors[.]'').

[2] All citations to the ALJ's Recommended Decision are to the slip opinion as issued on October 4, 2010.

[3] On July 14, 2011, Respondent's counsel notified this Office that he had completed his probation and that his conviction has been reduced to a misdemeanor. Be that as it may, under the public interest inquiry, DEA is also required to consider Respondent's compliance with applicable Federal and State laws related to controlled substances. *See* 21 U.S.C. 823(f)(4). As explained above, notwithstanding Respondent's completion of his probation and the reduction of his conviction to a misdemeanor, his conduct still constitutes a felony offense under Federal law. *See* 21 U.S.C. 841(a) & (b)(1)(D).

marijuana hydroponically. *Id.* at 8–9. The evidence also showed that Respondent had in his possession multiple marijuana pipes and pipe cleaners.[4] GX 7, at 30.

The evidence further showed that on numerous occasions, Respondent's niece (who was the legal ward of his wife) smoked marijuana with two boyfriends at Respondent's house and that on some occasions she provided the marijuana. GX 7, at 1, 7–8. Moreover, one of the boyfriends reported to the police that on two occasions, he observed marijuana leafs drying in the bedroom closet of Respondent's niece. *Id.* at 7.

As the ALJ recognized, the Government established a *prima facie* case for revocation on two separate grounds: (1) his felony conviction for manufacturing marijuana, and (2) his having committed acts which render his registration inconsistent with the public interest. ALJ at 22 (citing 21 U.S.C. 824(a)(2) & (4)). The ALJ correctly recognized that the burden then shifted to Respondent to demonstrate why revocation of his registration would be inappropriate and that he was ''required not only to accept responsibility for [his] misconduct, but also to demonstrate what corrective measures [he has] undertaken to prevent the reoccurrence of similar acts.'' *Id.* (quoting *Jeri Hassman, M.D.,* 75 FR 8194, 8236 (2010)).

DEA has also repeatedly held that a registrant's candor during both an investigation and the hearing itself is an important factor to be considered in determining both whether he has accepted responsibility as well as the appropriate sanction. *Robert F. Hunt, D.O.,* 75 FR 49995, 50004 (2010); *see also Hassman,* 75 FR at 8236 (quoting *Hoxie* v. *DEA,* 419 F.3d 477, 483 (6th Cir. 2005) (''Candor during DEA investigations, regardless of the severity of the violations alleged, is considered by the DEA to be an important factor when assessing whether a physician's registration is consistent with the public interest[.]'') Moreover, in assessing an appropriate sanction, DEA also properly considers the need to deter others from engaging in similar acts and the egregiousness of the misconduct. *See Joseph Gaudio,* 74 FR 10083, 10094 (2009); *Southwood Pharmaceuticals, Inc.,* 72 FR 36487, 36504 (2007) (citing *Butz* v. *Glover Livestock Commission Co., Inc.,* 411 U.S. 182, 187–88 (1973)).

Here, the ALJ found that Respondent credibly testified that he was in compliance with the terms of his probation, as well as the terms of the Order of the Wisconsin Medical Board, which include that he undergo treatment and be subject to random drug testing. ALJ at 22. While the ALJ found that Respondent ''demonstrate[d] an acknowledgement that his actions were illegal,'' he further observed that ''Respondent's testimony at the hearing did not reflect a high level of contrition,'' and that ''true remorse, to the extent Respondent may possess it, was not patently evident from his presentation at the hearing.'' *Id.* at 23. As the ALJ further explained, ''[d]uring his testimony, the Respondent gave the distinct impression that he was not so much sorry about his transgression as he was sorry that he got caught and was laboring under the criminal and administrative consequences of that reality.'' *Id.*

In addition, I note that in his testimony, Respondent maintained that he ''never'' provided marijuana to his niece, that she had obtained it behind his back, and that he had no knowledge that she was using marijuana and doing so with others prior to when the police searched his house. Tr. 47–48. However, the ALJ found this testimony ''implausibl[e],'' ALJ at 11, as do I.[5] Based on the ALJ's finding, I further find that Respondent's testimony was not entirely candid. Thus, even giving weight to the ALJ's findings regarding Respondent's rehabilitation and his acceptance of responsibility, Respondent's lack of candor supports a substantial period of suspension.

In seeking the revocation of Respondent's registration, the Government cited three cases, each of which the ALJ distinguished on the grounds that the various practitioners had engaged in far more egregious misconduct either because they also ''had significant * * * prescribing anomalies,'' or because they were found to have grown far larger amounts of marijuana than Respondent. ALJ at 23–24. However, possession of a four pound stash of a schedule I controlled substance is nothing to sneeze at, and indeed, under Federal law, it is a felony offense punishable by up to five years imprisonment and a $250,000 fine. *See* 21 U.S.C. 841(a) & (b)(1)(D). Moreover, as explained above, this is not simply a case of self-abuse. Rather, the evidence is clear that Respondent distributed the marijuana to his wife,[6] and whether he actually physically delivered the drug to his niece, it is clear that she had ready access to it and also distributed it to at least one of her boyfriends.

In short, while many cases brought under sections 303 and 304 of the Controlled Substances Act,[7] involve registrants who have engaged in substantial unlawful distributions to others, Respondent's felonious conduct is nonetheless sufficiently egregious to warrant the revocation of his registration.[8] *See* 21 U.S.C. 824(a)(2) (authorizing Agency to suspend or revoke a registration based on conviction for felony related to controlled substance). Moreover, even though Respondent now appears to acknowledge most of his illegal behavior and has been in compliance with the State Board's Order, I agree with the ALJ that the Agency's interest in deterring similar misconduct on the part of others warrants a substantial period of outright suspension. However, because I disagree with the ALJ's recommendation that a six-month suspension sufficiently protects the Agency's interest in deterring misconduct on the part of others and also note Respondent's less than candid testimony regarding his niece's access and use of marijuana, I will order that Respondent's registration be suspended for a period of one year.[9] Further, while Respondent's renewal application will be granted (subject to the suspension of

[4] Respondent was also convicted of possession of drug paraphernalia, a misdemeanor offense under Wisconsin law. ALJ Dec. at 4 (citing Wis. Stat. § 961.573(1)).

[5] Having observed Respondent testify, the ALJ≥s finding is entitled to substantial deference. Beyond this, the finding is consistent with other evidence of record including the statement of one of the informants that whenever the subject of the marijuana plants would come up, Respondent's niece ''would say that she couldn't talk about it''; that on at least two occasions, he observed marijuana leaves drying in her closet; and that on another occasion, when he and the niece needed marijuana, she left the bedroom and returned with a large bud which ''was packed down dried.'' GX 7, at 13. Thus, it is clear that his niece had ready access to Respondent's marijuana; moreover, Respondent offered no explanation as to why he allowed his niece to have access to it. In any event, Respondent's testimony that he was unaware that she was using marijuana begs credulity.

[6] Respondent likewise maintained that his wife used marijuana because she thought it eased a medical condition, but then acknowledged that ''[s]he would have smoked it anyway.'' Tr. 61. Moreover, Wisconsin does not permit the so-called ''medical'' use of marijuana.

[7] 21 U.S.A. 823 and 824.

[8] Indeed, in *Alan H. Olefsky,* 57 FR 928 (1992), DEA revoked a practitioner's registration based on his have in presented (in a single act) two fraudulent prescriptions to a pharmacist for filling. Respondent's conduct is at least as egregious as, if not considerably more so than, the conduct which warranted revocation in *Olefsky.*

[9] In determining the appropriate sanction, I have also considered the June 14, 2011 letter written by the Langlade County District Attorney on Respondent's behalf which was submitted to this Office on July 14, 2011. However, other than the information that Respondent has completed his probation and the terms of his sentence, the remainder of the letter does not constitute newly discovered evidence and I give it no weight.

his registration as set forth above), I further adopt the following conditions as recommended by the ALJ:

(1) The Respondent will comply with the terms and conditions of his criminal sentence and the Order of the Wisconsin Medical Board that are currently in effect, as well as any conditions which may be imposed in the future by either the state court or the Wisconsin Medical Board; Respondent shall provide a copy of all reports which he is required to submit to the Wisconsin Medical Board or the Department Monitor to the local DEA office within five business days of the submission.

(2) Respondent shall agree and ensure that copies of all drug screening test results are submitted to the local DEA office, whether those tests are ordered by the state court, the Wisconsin Medical Board, or the approved drug and alcohol monitoring program in which he has enrolled pursuant to the Final Order of the Wisconsin Board.[10]

Order

Pursuant to the authority vested in me by 21 U.S.C. 823(f) and 824(a), as well as 28 CFR 0.100(b) and 0.104, I hereby order that the application of Michael S. Moore, M.D., to renew his DEA Certificate of Registration be, and it hereby is, granted subject to the conditions set forth above. I further order that the registration of Michael S. Moore, M.D., be, and it hereby is, suspended for a period of one year. This Order is effective August 31, 2011.

Dated: July 21, 2011.

Michele M. Leonhart,

Administrator.

James Hambuechen, Esq., for the Government;

David Madison, Esq., for the Respondent.

Recommended Rulings, Findings of Fact, Conclusions of Law, and Decision of the Administrative Law Judge

John J. Mulrooney, II, Administrative Law Judge. On February 26, 2010, the Drug Enforcement Administration (DEA) Deputy Assistant Administrator issued an Order to Show Cause (OSC) seeking revocation of the Respondent's Certificate of Registration (COR), Number BM6464147, as a practitioner, pursuant to 21 U.S.C. 824(a)(2) and (a)(4), and denial of any pending applications for renewal or modification of such registration, pursuant to 21 U.S.C. 823(f), alleging that the Respondent has been convicted of a felony and misdemeanor involving controlled substances, and that his continued registration is otherwise inconsistent with the public interest, as that term is used in 21 U.S.C. § 823(f). On March 23, 2010, the Respondent timely requested a hearing, which was conducted in Arlington, Virginia, on August 31, 2010.[11]

The issue ultimately to be adjudicated by the Deputy Administrator, with the assistance of this recommended decision, is whether the record as a whole establishes by substantial evidence that Respondent's registration with the DEA should be revoked as inconsistent with the public interest as that term is used in 21 U.S.C. 823(f) and 824(a)(4). The Respondent's DEA COR is set to expire by its terms on January 31, 2011.

After carefully considering the testimony elicited at the hearing, the admitted exhibits, the arguments of counsel, and the record as a whole, I have set forth my recommended findings of fact and conclusions below.

The Evidence

The OSC issued by the Government alleges that revocation of the Respondent's COR is appropriate because of the Respondent's April 9, 2009 no contest plea to a felony charge of manufacturing and delivering tetrahydrocannabinols (THC),[12] and a misdemeanor charge of possession of drug paraphernalia, both of which, according to the Government's allegations, constitute criminal convictions that ''arose from [the Respondent] growing large amounts of marijuana at [Respondent's] home, which was discovered upon the execution of a search warrant on August 3, 2007.'' [13]

At the hearing, the Government presented the testimony of DEA Diversion Investigator (DI) Thomas B. Hill, in support of its case for revocation. Through DI Hill's testimony, the Government introduced the Final Decision and Order relative to the Respondent which was issued by the Wisconsin Medical Examining Board (Wisconsin Medical Board) on October 17, 2007. Gov't Ex. 3; Resp't Ex. 7; Tr. at 20. That document contains the Respondent's stipulation to the Wisconsin Medical Board's factual finding that, on August 3, 2007, he ''possess[ed] tetrahydrocannabinol, a Schedule I controlled substance, not in the course of professional practice, and without any other authorization to do so,'' and that said conduct ''violated Wis. Stat. § 961.41(3g) [possession of controlled substance], Wis. Adm. Code § Med 10.02(2)(p) [obtaining controlled substance outside legitimate practice], and (z) [violation of related law or rule],'' and that ''[s]uch conduct constitutes unprofessional conduct within the meaning of the Code and statutes.'' Gov't Ex. 3 at 1–2; Resp't Ex. 7 at 1–2. As a result of these factual findings and conclusions of law, the Respondent's state medical license was indefinitely suspended for a period of at least five years, subject to a stay of that suspension, which was conditioned upon the Respondent remaining in compliance with certain conditions and limitations contained in the Order. The conditions of the stay include rehabilitation, drug monitoring, and treatment regimens, all of which are directed to be conducted at his expense. The regimens set forth in the Wisconsin Medical Board's Order require the Respondent to, *inter alia,* attend individual and/or group therapy sessions, attend weekly Narcotics and/or Alcoholic Anonymous meetings, abstain from all personal use of alcohol, abstain from controlled substances ''except when prescribed, dispensed or administered by a practitioner for a legitimate medical condition,'' notify his designated treating physician and the Department Monitor within twenty-four hours of ingestion or administration of any and all medications and drugs, provide those officials with any associated prescription, and submit to drug and alcohol urinalysis screens at a frequency of not less than ninety-six times per year for the first year of the program. Gov't Ex. 3 at 3–4; Resp't Ex. 7 at 3–4. With respect to practice limitations, the Wisconsin Medical Board's Order limits the Respondent's practice of medicine to serving as an emergency physician in a Board-approved setting, and prohibits him from prescribing or ordering

[10] Because the Wisconsin Board imposed extensive drug testing on Respondent in its final order, and Respondent has passed each of these tests, I conclude that it is unnecessary to subject Respondent to additional drug testing. For this reason, as well as that there is no evidence that Respondent has diverted controlled substances in his professional capacity, I conclude that is unnecessary to require as a condition of his registration, that he agree to warrantless searches of his residence and principal place of business.

[11] Following the unexpected and unfortunate passing of the Gene Linehan, Esq., who had represented the Respondent at and prior to the hearing in this matter, representation was undertaken by current counsel, David Madison, Esq., an attorney who was associated with Mr. Linehan's law firm.

[12] A Schedule I controlled substance. 21 U.S.C. 812; 21 CFR 1308.11.

[13] Initially, the OSC also alleged that a positive urinalysis result rendered the Respondent in violation of the terms of an October 17, 2007 Final Decision and Order of the State of Wisconsin Medical Examining Board (Wisconsin Medical Board), requiring him to abstain from the personal use of controlled substances without a legitimate prescription. At the outset of the hearing, however, the Government withdrew that allegation. ALJ Ex. 11; Tr. at 12–14, 82.

controlled substances outside of that setting. Furthermore, the Order forbids the Respondent from the administering or dispensing of all controlled substances, and provides that all controlled substance orders issued by Respondent through his practice as an emergency physician ''shall be reviewed by another physician within twenty-four hours of issuance, in a manner which documents the review.'' Gov't Ex. 3 at 4; Resp't Ex. 7 at 4.

Through the testimony of DI Hill, the Government also introduced various documents obtained from the Wisconsin Court system relative to the Respondent's state criminal case, which arose out of the same conduct at issue in the state medical board proceedings. Gov't Ex. 6. Those documents reflect that on April 9, 2009, the Respondent entered a no contest plea [14] to Wisc. Stat. § 961.41(1)(h)(1), Manufacturing or Delivering [15] less than or equal to 200 grams of THC (a felony), and Wisc. Stat. § 961.573(1), Possession of Drug Paraphernalia (a misdemeanor), and, pursuant to that plea, was found guilty of both charges. *Id.* The documents reflect that the Respondent was sentenced to probation (sentence withheld two years), conditioned upon serving thirty days at Langlade County Jail with work-release privileges, 160 hours of community service, a monetary fine, a six month suspension of his driver's license, and several other terms. *Id.* at 3–4.

The transcript of the state court guilty plea was offered by the Respondent and received into evidence.[16] Tr. at 67; Resp't Ex. 1. Although at his sentencing hearing, the Respondent provided an unsworn statement assuring the criminal trial judge that he ''never sold [marijuana and] never shared it,'' [17] the record contains the following comments from the trial judge on the subject:

> I don't totally accept that [the Respondent] was growing simply for his own use. I think it was for probably, in all likelihood, him and his guests of like mind, his wife, but I do agree I am looking at this, and I see to a large extent these are plants, seeds, stems. Looks to me that there's probably some processed here. Looks to be down to the buds that are in the plastic bags, and probably more than you would normally find.

Resp't Ex. 1 at 26.

The criminal sentencing transcript also reflects an acknowledgement by the trial court that, under Wisconsin law, the Respondent, upon successful completion of his probation, may apply to have the felony conviction reduced to a misdemeanor. Resp't Ex. 1 at 3. Although there is no indication in the record that such an application has been granted, is pending, or has even been submitted to competent state officials for action,[18] it is worthy of note that Agency precedent has long held that even a subsequent dismissal would not undermine the validity of a criminal conviction for purposes of the CSA. *Edson W. Redard, M.D.,* 65 FR 30616, 30618 (2000); *Stanley Alan Azen, M.D.,* 61 FR 57893, 57895 (1996). Thus, following his plea to felony manufacturing of tetrahydrocannabinol (THC), Respondent remains a convicted felon, ''convicted of a felony under [the law of Wisconsin] relating to * * * a controlled substance. * * *'' [19]

The Government, through the testimony of DI Hill, also introduced a packet containing information related to the state criminal case that culminated in the convictions that form the basis of the Wisconsin Board Order. Gov't Ex. 7. Specifically, the Government provided the search and arrests warrants associated with the August 3, 2007 arrest that resulted in the Respondent's conviction of felony manufacturing of THC and misdemeanor possession of drug paraphernalia, as well as the associated affidavits prepared by the executing state law enforcement officers.[20] Gov't Ex. 7 at 1–5. The Government also supplied numerous investigation reports, inventories and allied documents prepared by members of two local county law enforcement entities, and sworn, hand-written statements from current and former boyfriends of the Respondent's niece. *Id.* at 6–31, 42–46. Also included in the packet were numerous documents that the Government alleged were seized at the Respondent's residence in connection with the search warrant execution, and which, according to the Government, demonstrated the Respondent's participation in a significant marijuana growing operation. *Id.* at 32–41.

It is well-settled that hearsay may be correctly considered at an administrative hearing and may even support a finding of substantial evidence. *Richardson* v. *Perales,* 402 U.S. 389, 402 (1971) (signed reports prepared by licensed physicians correctly admitted at Social Security disability hearing); *Keller* v. *Sullivan,* 928 F.2d 227, 230 (7th Cir. 1991) (insurance company investigative reports correctly admitted in Social Security disability hearing where sufficient indicia of reliability established); *Calhoun* v. *Bailar,* 626 F.2d 145, 149 (9th Cir. 1980) (hearsay affidavits correctly admitted where indicia of reliability established). However, there are limits that circumscribe the admission and utility of hearsay evidence before an administrative tribunal. The touchstone is that before it may be used to support of finding of substantial evidence, the offered hearsay evidence must have sufficient reliability and credibility. Divining the correct use of hearsay evidence requires a balancing of four factors: (1) Whether the out-of-court declarant was not biased and had no interest in the outcome of the case; (2) whether the opposing party could have obtained the information contained in the hearsay before the hearing and could have subpoenaed the declarant; (3) whether the information was inconsistent on its face; and (4) whether the information has been recognized by the courts as inherently reliable. *J.A.M. Builders* v. *Herman,* 233 F.3d 1350, 1354 (11th Cir. 2000).

Government Exhibit 7 divides analytically into five general categories of evidence: (1) A signed search and arrest warrant with its underlying supporting affidavit (executed by a local law enforcement officer) and some blank affiliated paperwork; [21] (2) two sworn statements apparently procured by local law enforcement personnel, signed by two individuals whom claim, respectively, to be the current and former boyfriend of the Respondent's niece (the boyfriends); [22] (3) unsigned typewritten police reports prepared by named local law enforcement personnel with apparent personal knowledge of the events contained therein, along with an apparently affiliated narcotics field

[14] A plea of no contest or *nolo contendere* that results in a judgment of conviction constitutes a conviction for purposes of the Controlled Substances Act (CSA). *Pearce* v. *DEA,* 867 F.2d 253, 255 (6th Cir. 1988); *Noell* v. *Bensinger,* 586 F.2d 554, 556–57 (5th Cir. 1978); *Sokoloff* v. *Saxbe,* 501 F.2d 571, 575 (2d Cir. 1974).

[15] A Plea Questionnaire/Waiver of Rights form subsequently entered into the record through Respondent's testimony reflects that the Respondent only pleaded guilty to the manufacturing of THC, rather than the statutory elements relating to delivery/distribution. Resp't Ex. 3 at 3; see also Tr. at 21–22, 67–70. Accordingly, the disposition of this charge is referenced hereinafter as a felony conviction for controlled substance manufacturing.

[16] The Respondent initially marked individual pages of the state court sentencing transcript as separate proposed exhibits, but the entire transcript was relatively brief and was received into evidence as a single exhibit.

[17] Resp't Ex. 1 at 23.

[18] Tr. at 90.

[19] 21 U.S.C. 824(a)(2).

[20] The Government did not produce live testimony from any of the state law enforcement officers.

[21] Gov't Ex. 7 at 1–5.

[22] *Id.* at 13–14.

test report [23] and documents that appear to reflect an inventory of items seized from the Respondent's residence on the night the search warrant was executed; [24] (4) documents purportedly seized from the Respondent's residence; [25] and (5) unsigned, handwritten notes that may have been prepared by law enforcement personnel on the scene of the search warrant executed at the Respondent's home.[26]

Regarding the fifth category (handwritten police notes), the documents are intermittently legible, insufficiently explained by any witness with personal knowledge, were excluded from consideration at the hearing,[27] and will play no role in the disposition of this case.

The documents offered by the Government in the fourth category (seized from the Respondent's residence) were authenticated by the Respondent, himself, who testified that he prepared the handwritten notes in the packet related to preparing for and monitoring the progress of his marijuana grow. Tr. at 50. Some of the seized notes related to information the Respondent accumulated to help him select the most effective lighting to maximize his marijuana yield. *Id.* at 49–50; Gov't Ex. 7 at 32. There are other notes that the Respondent indicated were taken from a book he read regarding marijuana grow methods,[28] and still more notes reflected his careful monitoring of the growth progress of his marijuana plants. Tr. at 49–51; Gov't Ex. 7 at 35–36. The Respondent identified a portion of the documents as an Internet recipe for preparing ''hash,'' an enterprise that he apparently attempted in vain. Tr. at 52; Gov't Ex. 7 at 37–41. The Respondent's marijuana research notes and materials were sufficiently authenticated and relevant to merit admission and consideration in these proceedings and clearly demonstrate a high level of planning in his efforts to circumvent the CSA.

Regarding the other documents in Government Exhibit 7, the first three *J.A.M. Builders* factors militate in favor of admission. There is no indication of bias on the part of the local law enforcement officers who swore out the warrant affidavits, prepared the investigative reports, and took the sworn statements from the two boyfriends. Likewise, no bias is readily apparent regarding the statements from the boyfriends.[29] The Respondent clearly had the opportunity to subpoena [30] any of the authors of any of the documents but elected (presumably for tactical reasons) not to do so. The documents are internally consistent and essentially consistent with one another.

Consideration of the fourth factor, that is, whether the information has been recognized by the courts as inherently reliable, is something of a mixed bag regarding Government Exhibit 7. In this administrative setting, the inventory log is reliable to the same extent generally accorded to records prepared in the regular course of business,[31] and courts routinely rely on sworn affidavits to support searches, seizures, and other intrusions,[32] but there is no precedential basis to accord any special weight to police reports. In *Richardson,*[33] the Supreme Court squarely based its holding on the narrow fact that the party opposing admission never used the available procedural devices to seek the personal appearances of the declarants, but the *Richardson* court took pains to point out that the case dealt with the admission of medical reports, each of which was ''prepared by a practicing physician who had examined [the opponent of admission and where each of whom had] set[] forth his medical findings in his area of competence. * * *'' 402 U.S. 389, 402 (1971). As the post-*Richardson* cases have evolved, the emphasis has increasingly focused on whether the opponent could have subpoenaed the declarant but declined to do so, and whether the hearsay is reliable and trustworthy. In *U.S. Pipe & Foundry Co.* v. *Webb,* 595 F.2d 264, 270 (5th Cir. 1979), the court re-emphasized that medical reports are inherently reliable and trustworthy. In *Klinestiver* v. *DEA,* 606 F.2d 1128, 1130 (D.C. Cir. 1979), the court held that hearsay at a DEA administrative hearing may constitute substantial evidence where the opponent of the evidence could have subpoenaed the declarant but declined to do so, and that the controlling guidance regarding admission is found in the DEA regulations. The current DEA regulations provide for the admission of evidence that is ''competent, relevant, material, and not unduly repetitious.'' 21 CFR 1316.59(a).

Balancing the *J.A.M. Builders* factors, the sworn statements, police reports, and allied paperwork (excluding the withdrawn, illegible handwritten notes) were admitted and considered, albeit with the heightened scrutiny correctly attached to evidence that has not been exposed to the rigors of cross-examination. *Cf.* 21 CFR 1301.43(c) (DEA regulations provide for the consideration of waiver-related statements to be ''considered in light of the lack of opportunity for cross-examination in determining the weight to be attached to matters of fact asserted therein.''). Government Exhibit 7, as admitted, establishes that the search warrant and ultimate arrest was the result of an investigation initiated based on information gleaned from a former boyfriend of the Respondent's niece. The niece was living in the Respondent's home and apparently smoking and sharing marijuana with guests, including (by their own accounts and at different times) the two boyfriends. When officers executed the state-authorized [34] search warrant, they uncovered a hidden, locked room with elaborate equipment utilized for the growing of marijuana, as well as multiple bags and other containers that held marijuana plant parts and seeds. According to the paperwork, 4.76 pounds [35] of marijuana were identified, tested,[36] and seized from the Respondent's residence. Gov't Ex. 7 at 17–18. Additionally, the executing officers seized some paperwork they believed to be related to the growing of marijuana, and through a previous, separate authorization, learned that the Respondent's power bill, at least in the opinion of the state investigators, was

[23] Although at least part of the Respondent's objection to the field test portion of the exhibit was founded in counsel's assertion that the type of field test employed was not adequately identified, Tr. at 30, the police paperwork indicates that a Nark II test 05 was utilized. Gov't Ex. 7 at 15.

[24] *Id.* at 6–12, 15–31.

[25] *Id.* at 32–41.

[26] *Id.* at 44–46.

[27] Tr. at 38–39.

[28] Gov't Ex. 7 at 33–34.

[29] To the extent that bias borne of jealousy or unrequited affection may have existed, it was not developed, elicited, or argued by any party to this litigation. To assign bias on the current record would be to engage in unwarranted and unfair speculation.

[30] In fact, the Prehearing Ruling, which was issued after service of the Government's Prehearing statement outlining its evidence, set a date by which subpoena requests were due. ALJ Ex. 7 at 4. No subpoena requests from the Respondent were filed.

[31] This heightened level of reliability is based on the likelihood that inventory logs reflecting seized property have been accurately kept, given that such logs are judicially-mandated pursuant to Fed. R. Crim. P. 41(f)(1)(b) (or, as is relevant to this case, the equivalent Wisconsin state criminal procedural rule, i.e. Wisc. Stat. § 968.17) and routinely relied on for a property itemization and accounting purpose by the courts, law enforcement, and the person whose property was seized.

[32] *See* Fed. R. Crim. P. 41(d).

[33] 402 U.S. 389 (1971).

[34] The search warrant was authorized by a Langlade County Court Commissioner. Gov't Ex. 7 at 2–3.

[35] DI Hill testified that 1,725 grams were seized, Tr. at 16, which would be a little less than four pounds.

[36] Gov't Ex. 7 at 15.

unusually large.[37] *Id.* at 1. The officers observed and seized what they characterized as ''four large stalks [of marijuana] in the hydroponic growing stages.'' [38] *Id.* at 9.

Inasmuch as DI Hill gleaned all the information he had about the case from documents that he obtained from local law enforcement officers and a court database check, the factual aspects of the case depend less on the credibility of his testimony than the truth of the facts established by the Government's exhibits introduced through Hill's testimonial foundations. Furthermore, even considering that the acknowledgement of virtually all the factual matters asserted in the paperwork by the Respondent in his testimony further diminishes the significance of Hill's testimony, it is worth noting that DI Hill provided testimony that was sufficiently detailed, plausible, and internally consistent to be deemed credible.

The Respondent testified at the hearing.[39] By his own account, the Respondent, who lives with his wife, two small children,[40] and his niece, has quite a history with marijuana. He recalled smoking marijuana most days he attended college, most non-working days after college, and several times a week through his medical residency program. Tr. at 44–45. After presumably purchasing marijuana on a regular basis for most of his adult life, the Respondent testified that he began growing his own marijuana during the 2004–2005 time frame. *Id.* at 46. At the time his house was searched, his current marijuana crop (grow) had four (4) plants, the yield of which, at least according to his testimony, was reserved for use by himself and his wife. *Id.* at 47. The Respondent acknowledged that he and his wife share their family home with their two children, ages nine and eleven, as well as a niece, and that his in-laws were the only people outside his home who knew about his foray into the world of marijuana production. *Id.* at 47. While the Respondent did not dispute the accounts in the police paperwork that ascribe significant marijuana consumption to his niece, he testified that this information came as a surprise to him. *Id.* at 47–48.

Regarding his conviction, the Respondent freely acknowledged all the attendant facts raised in the court records and the police paperwork, as well as the illegality of his conduct and the propriety of the conviction. *Id.* at 55, 77, 79. The Respondent represented that he intended to avoid violating controlled substance laws in the future. *Id.* at 76. In response to questioning by the Government, the Respondent agreed that marijuana is an illegal substance and concurred that his conviction was not unfair. *Id.* at 55. When asked why he elected to grow marijuana (after an adult lifetime of presumably acquiring the substance by other means), the Respondent related that he lived in a small community and would likely be easily identified as a physician during any exploit to purchase marijuana from those ''on the street'' in his local area willing to sell it.[41] *Id.* at 78.

The Respondent credibly testified that he has complied with the conditions fixed by the Wisconsin Medical Board during the first three years of the five-year duration of its Order. *Id.* at 58–59. In particular, the Respondent testified that he has complied with the Order's mandate of random urinalysis, including one directive to provide a random sample which serendipitously arose while he was traveling to the hearing of this case. *Id.* at 59.

The Respondent also elaborated on the community service that he provided at the direction of the Wisconsin Medical Board. Although he performed work at a hospice as directed by the criminal court, the Respondent also indicated that he continues to contribute his time to the nun-operated hospice, even after the community service time in his sentence has been completed. *Id.* at 64–65. The Respondent also testified that he had performed volunteer work at the hospice before his conviction. *Id.*

The Respondent characterized his community as ''sparsely populated,'' discussed his perception that physician recruitment was problematic in the area, and indicated that he would be unable to provide his emergency room services if rendered unauthorized to handle controlled substances. *Id.* at 65–66.

While the Respondent implausibly testified that the marijuana he produced was only consumed by himself and his wife, and that he was surprised to learn that his niece (who was also the legal ward of his wife) was also smoking his pot by herself and with company, the bulk of his other testimony, though admittedly self-serving, was sufficiently plausible, detailed, and internally consistent to be deemed generally credible for purposes of this recommended decision.

The Respondent offered letters of support from various medical practitioners in his community. Resp't Exs. 8–11. A carefully-worded letter authored by Noel N. Deep, M.D., F.A.C.P., the Chief of Staff at the Langlade Hospital, relates that the Respondent has ''scored high on patient satisfaction surveys, that his ''professionalism and clinical skills'' have won praise from members of the hospital staff, that he has volunteered to serve in numerous capacities in the hospital, and that Dr. Deep has ''never been aware of any adverse clinical outcomes or patient care concerns'' related to the Respondent's work. Resp't Ex. 8. The principal thrust of Dr. Deep's letter is to essentially highlight the potential impact that would be felt by Langlade Hospital and the rural community surrounding it should one of its four emergency room physicians be deprived access to controlled substance handling authority by DEA. *Id.* In particular, the letter indicates that an adverse DEA decision in this regard ''would burden the other three physicians who currently share the Emergency Room call rotation with [the Respondent].'' *Id.*

Another Langlade Hospital administrator, David Schneider, the executive director, also provided a letter of support. Resp't Ex. 10. Like the wording in Dr. Deep's letter, this hospital official references the Respondent's patient satisfaction survey scores, and indicates that there have been ''[n]o clinical adverse issues'' associated with the Respondent's practice at the hospital, which (like the survey results) Mr. Schneider characterizes as ''at the upper end of quality scales.'' *Id.* Mr. Schneider, like Dr. Deep, spends a significant portion of his letter seeking leniency for the Respondent, based upon community

[37] Presumably this information was included on the affidavit in support of the search warrant under the theory that it was consistent with the power required to run electrical equipment associated with a marijuana grow operation.

[38] Although the police paperwork indicates that both still and video photographs of the hidden room, marijuana, and paraphernalia were generated at the scene contemporaneous with the search warrant execution, the Government, inexplicably, did not offer any of this evidence at the hearing. During his testimony, DI Hill initially testified that three (3) marijuana plants were seized from the Respondent's residence. Tr. at 39–40. This is curious in light of the fact that he readily maintained that all his knowledge about the case was obtained through the paperwork he provided, *Id.* at 19, 41, and the paperwork indicates that four (4) plants were seized. Gov't Ex. 7 at 9. In his testimony, the Respondent confirmed that four (4) plants were seized. Tr. at 46.

[39] Although the Respondent noticed himself as a witness, he testified as a witness called by the Government.

[40] Tr. at 56.

[41] During his criminal sentencing hearing, the Respondent's counsel argued that he chose to grow marijuana to help his wife with a digestive disorder and as a way to withhold support from Mexican drug cartels. Resp't Ex. 1 at 19. The Respondent's response at his DEA administrative hearing appears to be a more candid and plausible handling of the issue.

impact, stating that ''Langlade Hospital serves a medically underserved area [where] it has been and is increasingly difficult to obtain and maintain skilled practitioners in full-time [emergency room] service.'' *Id.*

A third letter admitted into evidence is co-signed by the three emergency medicine physicians who, according to the Respondent,[42] are his partners at Northwoods Emergency Physicians, LLP (the Northwoods Group), a medical entity that provides emergency room physicians to Langlade Hospital. Resp't Ex. 9; Tr. at 63. The letter from the Respondent's associates details the conditions fixed by the Wisconsin Medical Board in its Order, and (somewhat self-servingly) concludes that ''[t]hese are adequate measures to assure patient safety.'' Resp't Ex. 9. Like the other letters, there is a reference to the doctors' perception that the area surrounding Langlade Hospital is ''underserved'' and currently benefits by the Respondent's presence there, and presumably also his access to controlled substances.

The Respondent also provided a letter from Sister Dolores Demulling, R.N., M.S., the Administrator at the LeRoyer Hospice affiliated with the hospital where the Respondent serves in the emergency room. Resp. Ex. 11. Sr. Demulling confirmed the Respondent's representations that he has volunteered his time doing hospice work and provides her estimation that the Respondent's ''medical care in the emergency room has always been very satisfactory.'' *Id.*

In evaluating the weight to be attached to the representations in the letters provided by the Respondent's hospital administrators and peers, it can hardly escape notice that, in addition to the fact that the authors were not subjected to the rigors of cross examination, each source has a significant influencing consideration that bears caution. The emergency room doctors are the Respondent's partners. As partner-members to a group which is contracted to cover Langlade Hospital, it is not improbable that the doctors would likely be understandably reluctant to question the abilities of one of their own. Criticism of a member's ability to safely continue to serve the hospital would perforce call into question the Northwoods Group's ability to continue to staff the emergency room. Similarly, the hospital administrators who have elected to allow the Northwoods Group to continue to utilize the Respondent's services for patient care would be virtually unable to provide an unflattering assessment of any concerns they possess without exposing the institution to significant potential past and future tort and/or regulatory liability. However, even bearing these concerns in mind, the letters can, should, and will nevertheless provide evidence that other medical professionals and administrators feel sufficiently confident in the Respondent and his level of professional commitment that they believe his continued authorization to handle controlled substances will not pose an unacceptable risk to the patients served by Langlade Hospital.

Other evidence required for a disposition of this issue is set forth in the analysis portion of this decision.

The Analysis

The Deputy Administrator[43] may revoke a registrant's DEA Certification upon a finding that the registrant has been convicted of a felony relating to a CSA-designated controlled substance. 21 U.S.C. § 824(a)(2). As discussed *supra,* a conviction resulting from a *nolo contendere,* or ''no contest'' plea, is a conviction providing a sufficient basis for the revocation of a DEA COR under section 824(a)(2). *Pearce* v. *DEA,* 867 F.2d 253, 255 (6th Cir. 1988); *Noell* v. *Bensinger,* 586 F.2d 554, 556–57 (5th Cir. 1978); *Sokoloff* v. *Saxbe,* 501 F.2d 571, 574–75 (2d Cir. 1974); *Edson W. Redard, M.D.,* 65 FR 30616, 30618 (2000). Furthermore, inasmuch as the Agency has consistently held that a deferred adjudication of guilt following a guilty plea, even where the proceedings are later dismissed, still constitutes a conviction within the statutory meaning of the CSA,[44] the potential for some future reduction of the Respondent's conviction before the Wisconsin state courts bears little on any issue relevant to a disposition of this administrative case. Hence, inasmuch as the uncontroverted evidence of record conclusively establishes that the Respondent has been convicted of a state felony relating to controlled substances, *to wit,* the manufacture of a Schedule I controlled substance (marijuana), the Government has established a basis under which the revocation relief it seeks may be evaluated to determine whether it constitutes a provident exercise of discretion. *Pearce,* 867 F.2d at 256.

In addition to the controlled-substance-related felony conviction basis that the Government established in support of the revocation it seeks, under 21 U.S.C. 824(a)(4), the Deputy Administrator may also revoke a registrant's DEA COR if persuaded that the registrant ''has committed such acts that would render * * * registration under section 823 * * * inconsistent with the public interest * * *'' The following factors have been provided by Congress in determining ''the public interest:''

(1) The recommendation of the appropriate State licensing board or professional disciplinary authority.

(2) The applicant's experience in dispensing, or conducting research with respect to controlled substances.

(3) The applicant's conviction record under Federal or State laws relating to the manufacture, distribution, or dispensing of controlled substances.

(4) Compliance with applicable State, Federal or local laws relating to controlled substances.

(5) Such other conduct which may threaten the public health and safety.

21 U.S.C. 823(f).

''[T]hese factors are considered in the disjunctive.'' *Robert A. Leslie, M.D.,* 68 FR 15227, 15230 (2003). Any one or a combination of factors may be relied upon, and when exercising authority as an impartial adjudicator, the Deputy Administrator may properly give each factor whatever weight she deems appropriate in determining whether an application for a registration should be denied. *Id.; David H. Gillis, M.D.,* 58 FR 37507, 37508 (1993); *see also Joy's Ideas,* 70 FR 33195, 33197 (2005); *Henry J. Schwarz, Jr., M.D.,* 54 FR 16422 (1989). Moreover, the Deputy Administrator is ''not required to make findings as to all of the factors * * * .'' *Hoxie* v. *DEA,* 419 F.3d 477, 482 (6th Cir. 2005); *see also Morall* v. *DEA,* 412 F.3d 165, 173–74 (D.C. Cir. 2005). The Deputy Administrator is not required to discuss consideration of each factor in equal detail, or even every factor in any given level of detail. *Trawick* v. *DEA,* 861 F.2d 72, 76 (4th Cir. 1988) (Administrator's obligation to explain the decision rationale may be satisfied even if only minimal consideration is given to the relevant factors and remand is required only when it is unclear whether the relevant factors were

[42] Tr. at 73.

[43] This authority has been delegated pursuant to 28 CFR 0.100(b) and 0.104.

[44] *Vincent J. Scolaro, D.O.,* 67 FR 42060, 42065 (2002) (citing *Yu-To Hsu, M.D.,* 62 FR 12840 (1997)); *Redard,* 65 FR at 30618; *Stanley Alan Azen, M.D.,* 61 FR 57893, 57895 (1996). Agency precedent has previously validated the position that to hold otherwise would mean ''the conviction could only be considered between its date and the date of subsequent dismissal * * * [which would be] inconsistent with holdings in other show cause cases that the passage of time since misconduct affects only the weight to be given the evidence.'' *Edson W. Redard, M.D.,* 65 FR 30616, 30618 (2000) (citing *Mark Binette, M.D.,* 64 FR 42977, 42980 (1999)); *Thomas H. McCarthy, D.O.,* 54 FR 20938 (1989), *aff'd* No. 89–3496 (6th Cir. Apr. 5, 1990).

considered at all). The balancing of the public interest factors ''is not a contest in which score is kept; the Agency is not required to mechanically count up the factors and determine how many favor the Government and how many favor the registrant. Rather, it is an inquiry which focuses on protecting the public interest * * *.'' *Jayam Krishna-Iyer, M.D.,* 74 FR 459, 462 (2009).

In an action to revoke a registrant's DEA Certificate of Registration, the DEA has the burden of proving that the requirements for revocation are satisfied. 21 CFR 1301.44(e). Once DEA has made its prima facie case for revocation of the registrant's DEA COR, the burden of production then shifts to the Respondent to show that, given the totality of the facts and circumstances in the record, revoking the registrant's registration would not be appropriate. *Morall,* 412 F.3d at 174; *Humphreys* v. *DEA,* 96 F.3d 658, 661 (3d Cir. 1996); *Shatz* v. *U.S. Dept. of Justice,* 873 F.2d 1089, 1091 (8th Cir. 1989); *Thomas E. Johnston,* 45 FR 72311, 72311 (1980). Further, ''to rebut the Government's *prima facie* case, [the Respondent] is required not only to accept responsibility for [the established] misconduct, but also to demonstrate what corrective measures [have been] undertaken to prevent the reoccurrence of similar acts.'' *Jeri Hassman, M.D.,* 75 FR 8194, 8236 (2010).

Where the Government has sustained its burden and established that a registrant has committed acts inconsistent with the public interest, that registrant must present sufficient mitigating evidence to assure the Deputy Administrator that he or she can be entrusted with the responsibility commensurate with such a registration. *Steven M. Abbadessa, D.O.,* 74 FR 10077 (2009); *Medicine Shoppe-Jonesborough,* 73 FR 364, 387 (2008); *Samuel S. Jackson, D.D.S.,* 72 FR 23848, 23853 (2007). Normal hardships to the practitioner, and even the surrounding community, that are attendant upon the lack of registration are not a relevant consideration. *Abbadessa,* 74 FR at 10078; *see also Gregory D. Owens, D.D.S.,* 74 FR 36751, 36757 (2009).

The Agency's conclusion that past performance is the best predictor of future performance has been sustained on review in the courts, *Alra Labs.* v. *DEA,* 54 F.3d 450, 452 (7th Cir. 1995), as has the Agency's consistent policy of strongly weighing whether a registrant who has committed acts inconsistent with the public interest has accepted responsibility and demonstrated that he or she will not engage in future misconduct. *Hoxie,* 419 F.3d at 483; *George C. Aycock, M.D.,* 74 FR 17529, 17543 (2009); *Abbadessa,* 74 FR at 10078; *Krishna-Iyer,* 74 FR at 463; *Medicine Shoppe,* 73 FR at 387.

While the burden of proof at this administrative hearing is a preponderance-of-the-evidence standard, *see Steadman* v. *SEC,* 450 U.S. 91, 100–01 (1981), the Deputy Administrator's factual findings will be sustained on review to the extent they are supported by ''substantial evidence.'' *Hoxie,* 419 F.3d at 481. While ''the possibility of drawing two inconsistent conclusions from the evidence'' does not limit the Deputy Administrator's ability to find facts on either side of the contested issues in the case, *Shatz,* 873 F.2d at 1092; *Trawick,* 861 F.2d at 77, all ''important aspect[s] of the problem,'' such as a respondent's defense or explanation that runs counter to the Government's evidence, must be considered. *Wedgewood Village Pharm.* v. *DEA,* 509 F.3d 541, 549 (D.C. Cir. 2007); *Humphreys,* 96 F.3d at 663. The ultimate disposition of the case must be in accordance with the weight of the evidence, not simply supported by enough evidence to justify, if the trial were to a jury, a refusal to direct a verdict when the conclusion sought to be drawn from it is one of fact for the jury. *Steadman,* 450 U.S. at 99 (internal quotation marks omitted).

Regarding the exercise of discretionary authority, the courts have recognized that gross deviations from past agency precedent must be adequately supported, *Morall,* 412 F.3d at 183, but mere unevenness in application does not, standing alone, render a particular discretionary action unwarranted. *Chein* v. *DEA,* 533 F.3d 828, 835 (D.C. Cir. 2008) (citing *Butz* v. *Glover Livestock Comm. Co., Inc.,* 411 U.S. 182, 188 (1973)), *cert. denied,* __ U.S. __, 129 S. Ct. 1033 (2009). It is well-settled that since the Administrative Law Judge has had the opportunity to observe the demeanor and conduct of hearing witnesses, the factual findings set forth in this recommended decision are entitled to significant deference, *Universal Camera Corp.* v. *NLRB,* 340 U.S. 474, 496 (1951), and that this recommended decision constitutes an important part of the record that must be considered in the Deputy Administrator's decision, *Morall,* 412 F.3d at 179. However, any recommendations set forth herein regarding the exercise of discretion are by no means binding on the Deputy Administrator and do not limit the exercise of that discretion. 5 U.S.C. § 557(b); *River Forest Pharm., Inc.* v. *DEA,* 501 F.2d 1202, 1206 (7th Cir. 1974); *Attorney General's Manual on the Administrative Procedure Act* 8 (1947).

Factor 1: The Recommendation of the Appropriate State Licensing Board or Professional Disciplinary Authority

The present record reflects that the Wisconsin Medical Board, by issuing a suspension that was stayed with conditions, implicitly determined that with the imposition of a number of arguably arduous monitoring and supervision conditions the Respondent could continue to practice medicine and handle controlled substances. Gov't Ex. 3; Resp't Ex. 7.

Action taken by a state medical board is an important, though not dispositive, factor in determining whether the continuation of a DEA COR is consistent with the public interest. *Patrick W. Stodola, M.D.,* 74 FR 20727, 20730 (2009); *Jayam Krishna-Iyer,* 74 FR at 461. The considerations employed by, and the public responsibilities of, a state medical board in determining whether a practitioner may continue to practice within its borders are not coextensive with those attendant upon the determination that must be made by the DEA relative to continuing a registrant's authority to handle controlled substances. It is well-established Agency precedent that a ''state license is a necessary, but not a sufficient condition for registration.'' *Leslie,* 68 FR at 15230; *John H. Kennedy, M.D.,* 71 FR 35705, 35708 (2006). Even the reinstatement of a state medical license does not affect the DEA's independent responsibility to determine whether a registration is in the public interest. *Mortimer B. Levin, D.O.,* 55 FR 9209, 8210 (1990). The ultimate responsibility to determine whether a registration is consistent with the public interest has been delegated exclusively to the DEA, not to entities within state government. *Edmund Chein, M.D.,* 72 FR 6580, 6590 (2007), *aff'd, Chein* v. *DEA,* 533 F.3d 828 (D.C. Cir. 2008), *cert. denied,* __ U.S. __, 129 S. Ct. 1033 (2009). Congress vested authority to enforce the CSA in the Attorney General and not state officials. *Stodola,* 74 FR at 20375. On the issue of revocation, consideration of this first factor presents something of a mixed bag. By its own terms, the Order suspends the Respondent's medical license indefinitely, but stays that action, contingent on the satisfaction of numerous conditions. Gov't Ex. 3 at 3; Resp't Ex. 7 at 2. In exercising its public safety responsibilities and medical oversight authority relative to the Respondent, the Order of the Wisconsin Medical Board reflected the judgment of that body that the Respondent's transgressions, while sufficiently grave to warrant a complete preclusion of all medical privileges, were not of a nature

that precluded the safe treatment of patients and handling of controlled substances, so long as significant monitoring and oversight were mandated. This factor weighs in favor of a significant sanction, but also lends some possible support to the consideration of a less stringent alternative to the complete COR revocation sought by the Government.

Factor 3: The Applicant's Conviction Record Under Federal or State Laws Relating to the Manufacture, Distribution, or Dispensing of Controlled Substances

The record reflects the Respondent was convicted of felony manufacture of marijuana, as referenced under the 21 U.S.C. 824(a)(2) analysis. Consistent with his plea, the Respondent was also convicted of a state misdemeanor offense related to the possession of drug paraphernalia.

By its own terms, as expressed in the record of conviction, the Respondent's marijuana manufacture felony conviction is clearly related to the manufacture of controlled substances. That the Respondent was convicted of illegally manufacturing a Schedule I controlled substance in a clandestine partition within the bedroom closet of his residence while he was operating under a DEA COR is, without a doubt, logically repugnant to the notion that he should ever again be entrusted with the responsibilities of a DEA registrant, and therefore militates strongly in favor of the revocation sought by the Government.

As clear as the pendulum under Factor 3 swings regarding the Respondent's manufacturing conviction, the picture is somewhat murkier regarding his misdemeanor conviction for drug paraphernalia. While the paraphernalia conviction undoubtedly relates to controlled substances, Agency precedent is less clear on whether such a conviction relates to the manufacture, distribution, or dispensing of controlled substances under the third public interest factor. For example, with respect to convictions involving possession of actual narcotics, in *Stanley Alan Azen, M.D.,* 61 FR 57893, 57895 (1996), *aff'd, Azen* v. *DEA,* 76 F.3d 384 (9th Cir. 1996), a state felony conviction for possession of cocaine was held to be relevant to Factor 3. Likewise, in *Jeffrey Martin Ford, D.D.S.,* 68 FR 10750, 10753 (2003), a cocaine possession felony conviction was held to implicate this factor. On the contrary, in *Super-Rite Drugs,* 56 FR 46014 (1991), the Agency determined that a cocaine possession conviction did not implicate Factor 3 based on the reasoning that ''[a]lthough [the respondent] entered a guilty plea to a drug-related felony, *his actions did not relate to the manufacture, distribution, or dispensing* of controlled substances.'' *Id.* (emphasis supplied). Ironically, although *Super-Rite Drugs* is the more dated precedent, it is the most persuasive and should be followed. The analysis in *Azen* centered on the subsequent state court reversal of the conviction, and in *Ford,* the decision actually omitted the phrase ''relating to the manufacture, distribution, or dispensing'' when addressing the issue. A contrary interpretation would eviscerate the difference between public interest Factors 3 and 5 and ignore the specific language inserted by Congress. Guidance can be found in the accepted maxims of statutory interpretation that ''a statute of specific intention takes precedence over one of general intention,'' *United States* v. *Dozier,* 555 F.3d 1136, 1140 n.7 (10th Cir. 2009) (citing *NISH* v. *Rumsfeld,* 348 F.3d 1263, 1272 (10th Cir. 2003)), that ''words should ordinarily be given their ordinary meaning,'' *Moskal* v. *United States,* 498 U.S. 103, 108 (1990), and that ''where language is clear and unambiguous, it must be followed, except in the most extraordinary situation where the language leads to an absurd result contrary to clear legislative intent.'' *United States* v. *Plots,* 347 F.3d 873, 876 (10th Cir. 2003) (citing *United States.* v. *Tagore,* 158 F.3d 1124, 1128 (10th Cir. 1998)); *see Griffin* v. *Oceanic Contractors,* 458 U.S. 564, 572 (1982); *Comm'r* v. *Brown,* 380 U.S. 563, 571 (1965). The ordinary meaning of the clear, unambiguous, specifically limiting words ''relating to the manufacture, distribution, or dispensing of controlled substances'' set forth in 21 U.S.C. 823(f) compels the result that a conviction that is related to illegal drugs generally, but not to manufacturing, distributing, or dispensing specifically, is not relevant to public interest Factor 3.

In evaluating the Respondent's paraphernalia conviction within this analytical framework, even assuming, *arguendo,* that a possession of drug paraphernalia conviction stemming from items *used* to manufacture a controlled substance could conceivably fall within a broad reading of the conduct contemplated under Factor 3, the record in the instant case, as it stands, does not provide a sufficient basis to make such a finding. The lack of factual development and associated evidence presented at the hearing concerning details regarding the specific items of alleged drug paraphernalia upon which the conviction was premised (and the purpose for which said items were utilized, i.e. for personal use, manufacture, distribution, etc.) simply does not provide a means to determine whether the conviction relates to the manufacture, distribution, or dispensing of controlled substances as contemplated under the statutory language employed under Factor 3 and as interpreted by Agency precedent.

Accordingly, although an analysis of the Respondent's two convictions present some mixed considerations regarding Factor 3, the gravity and circumstances of the manufacturing felony conviction so profoundly tip the scales against the Respondent's continued registration that consideration of this factor weighs strongly in favor of revocation.

Factors 2 and 4: The Respondent's Experience in Dispensing Controlled Substances and Compliance With Applicable State, Federal or Local Laws Relating to Controlled Substances

The evidence of record in this case raises issues regarding both Factor 2 (experience dispensing[45] controlled substances) and Factor 4 (compliance with federal and state law relating to controlled substances). Regarding Factor 2, neither party to the litigation introduced any evidence relevant to the quality of the controlled substance dispensing that the Respondent has engaged in relative to his medical practice.[46] Ordinarily, the qualitative manner and the quantitative volume in which a registrant has engaged in the dispensing of controlled substances, and how long he has been in the business of doing so are factors to be evaluated in reaching a determination as to whether he should be entrusted with a DEA certificate. In some cases, viewing a registrant's actions against a backdrop of how he has performed activity within the scope of the certificate can provide a contextual lens to assist in a fair adjudication of whether continued registration is in the public interest. However, the Agency has taken the reasonable position that although evidence that a practitioner may have conducted a significant level of sustained activity within the scope of the registration for a sustained period is a relevant and correct consideration, this factor can be outweighed by acts

[45] The statutory definition of the term ''dispense'' includes the prescribing and administering of controlled substances. 21 U.S.C. 802(10).

[46] The record does reflect that the controlled substance prescription monitoring condition imposed on the Respondent by the Wisconsin Medical Board has yielded no negative feedback as of April 9, 2010. *See* Resp't Ex. 9.

held to be inconsistent with the public interest. *Jayam Krishna-Iyer,* 74 FR at 463.

While true that the record is devoid of evidence related to the Respondent's prescribing practices at work, at home he was producing a significant amount of marijuana, a Schedule I controlled substance, and distributing it (at a minimum) to himself and his wife. Tr. at 47; Resp't Ex. 1 at 26. The record also contains significant evidence that, even if the Respondent's dubious testimony that he was surprised that his niece was using marijuana is credited, it is clear that any safeguards deployed to ensure against that eventuality were sadly lacking. Virtually the only evidence of any dispensing of controlled substance on the part of the Respondent is that he dispensed marijuana to himself and his wife, and in the process lacked the ability and/or inclination to keep the drug from his niece and her friends. Thus, consideration of the Respondent's dispensing history, at least as it relates to his marijuana harvest, militates in favor of revocation.[47]

Regarding Factor 4, to effectuate the dual goals of conquering drug abuse and controlling both legitimate and illegitimate traffic in controlled substances, ''Congress devised a closed regulatory system making it unlawful to manufacture, distribute, dispense, or possess any controlled substance except in a manner authorized by the CSA.'' *Gonzales* v. *Raich,* 545 U.S. 1, 13 (2005). Every DEA registrant serves as a guardian of the closed regulatory system, with specific obligations aimed at protecting against improper diversion. It would be difficult to imagine a more deliberate, flagrant disregard to the Respondent's obligations as a registrant than his decision to convert a portion of his residence into a marijuana factory for himself and his family. While there is no doubt that there was room for some elaboration of the evidence on the part of the Government, the record clearly demonstrates that this was not a single marijuana plant growing in a tiny pot on the Respondent's bedroom window. The Respondent pled guilty to a felony-level conviction for the manufacture of a Schedule I controlled substance, which was conducted in a specially-constructed secret room, with sophisticated equipment, detailed instructions, and documented monitoring. Gov't Ex. 7. Consideration of the Respondent's compliance with state and federal laws related to controlled substances (Factor 4) militates strongly in favor of revocation.

Factor 5: Such Other Conduct Which May Threaten the Public Health and Safety

Under Factor 5, the Deputy Administrator is authorized to consider ''other conduct which may threaten the public health and safety.'' 21 U.S.C. 823(f)(5). It is settled Agency precedent that, ''offenses or wrongful acts committed by a registrant outside of his professional practice, but which relate to controlled substances may constitute sufficient grounds for the revocation of a registrant's DEA Certificate of Registration.'' *David E. Trawick, D.D.S.,* 53 FR 5326 (1988); *Jose Antonio Pla-Cisneros, M.D.,* 52 FR 42154 (1987); *Walker L. Whaley, M.D.,* 51 FR 15556 (1986). As discussed above, the Respondent produced a significant yield of a Schedule I controlled substance and distributed it to himself and (at least) his wife. While any action that undermines the closed regulatory system by the intentional and secretive production of a controlled substance arguably has the potential to adversely impact public safety in a broad sense, the issue under Factor 5 is not merely whether the public safety was adversely impacted to any extent, but rather, whether consideration of any threat to public safety militates in favor of revocation. In other words, consideration of evidence under Factor 5 is less of a litmus test for conceivable public impact than it is a question of degree. The credible, unrefuted evidence of record establishes that the fruits of the Respondent's marijuana grow were being abused by not only himself and his wife, but also by his niece and at least two of her suitors. Gov't Ex. 7 at 13–14. Admittedly, no admissible evidence established the age of the Respondent's niece,[48] and no evidence indicated that the Respondent's minor children were exposed to the illegal fruits of his grow, but it is beyond dispute that the marijuana he was growing was being regularly and continuously abused by persons other than the Respondent. The Respondent grew marijuana plants, abused marijuana himself, and shared it with his wife and niece. His niece shared it with others. However, although the public safety was arguably affected, the issue here is not so narrow. Even acknowledging the reality that any leak in the closed system of controlled substances cannot occur without some diminishment of the public safety in general, a consideration of this Factor (public health and safety threat), under these circumstances, does not support the revocation sought by the Government.

Recommendation

A balancing of the public interest factors militates sufficiently in favor of revocation to compel the conclusion that the Government has borne its burden to establish a *prima facie* case for revocation under 21 U.S.C. 824(a)(4) as well as (a)(2). Inasmuch as the Government has made out a *prima facie* case for revocation, to avoid this sanction, the burden shifts to the Respondent to demonstrate that COR revocation is inappropriate. *Morall,* 412 F.3d at 174; *Humphreys* v. *DEA,* 96 F.3d 658, 661 (3d Cir. 1996); *Shatz* v. *U.S. Dept. of Justice,* 873 F.2d 1089, 1091 (8th Cir. 1989); *Thomas E. Johnston,* 45 FR 72311 (1980). Further, to meet this burden ''to rebut the Government's *prima facie* case, [the Respondent] is required not only to accept responsibility for [the established] misconduct, but also to demonstrate what corrective measures [have been] undertaken to prevent the reoccurrence of similar acts.'' *Jeri Hassman, M.D.,* 75 FR 8194, 8236 (2010).

The Respondent credibly testified that he is complying with the conditions of his criminal sentence, including the terms of his probation, and that he is complying with the monitoring terms fixed by the Order of the Wisconsin Medical Board, including mandated substance abuse treatment[49] and a regimen of random drug tests that have thus far yielded no adverse results. Tr. at 58–59. The Respondent testified that he accepts the wrongfulness of his conduct and that he has resolved not to violate drug laws in the future. *Id.* at 77–79.

While the Respondent, with the words of acceptance he carefully employed in his testimony, has satisfied the Agency-created condition precedent to seek amelioration of the sanction of revocation, his words of acceptance are at least somewhat fortified by his

[47] Although the record contains evidence that a .38 caliber handgun was located near the entrance to the secret room that contained the Respondent's marijuana grow and associated equipment, and that marijuana was found in many small paper and plastic bags and other containers with other bags readily accessible, the evidence was not developed sufficiently to allow any relevant inference (such as an escalated likelihood that these types of items are often linked with distribution activity) from those factors. Gov't Ex. 7 at 9, 17, 19, 23–31. Accordingly, no such inference can fairly be drawn on this record.

[48] According to the police reports, the Respondent's spouse indicated that she is the legal guardian of the Respondent's niece. Gov't Ex. 7 at 20.

[49] However, the Respondent introduced no input from anyone connected with any drug rehabilitation program in which he has participated.

apparent level of uneventful compliance with a significant level of restrictions and monitoring. Still, his actions regarding his in-home marijuana factory, at least as they are depicted in the record evidence, are remarkable in the extent to which they reflect a high level of planning and deliberation to thwart the CSA. This was not an accidental occurrence or a brief dalliance, but an elaborate, secretive, deliberate, liberally-financed plan to undermine the CSA—the Act that authorizes the COR that was issued to the Respondent as a registrant. This is the same COR upon which, according to his testimony, he bases his livelihood as a physician. Tr. at 65. Under the circumstances presented here, the Agency has an interest in both assuring that the Respondent can be entrusted with the responsibilities attendant upon a COR registrant and (notwithstanding the non-punitive nature of these proceedings) the Agency's legitimate interest in deterring others from similar acts. *Hassman,* 75 FR at 10094; *Joseph Gaudio, M.D.,* 74 FR 10083, 10095 (2009); *Southwood Pharms., Inc.,* 72 F.R at 36504 (citing *Butz* v. *Glover Livestock Commission Co., Inc.,* 411 U.S. 182, 187–88 (1973)). Therefore, the appropriate sanction must factor in the Respondent's acknowledgement of wrongdoing and efforts at demonstrating sufficient contrition and rehabilitation efforts, while also incorporating the Agency's interests in the integrity of the closed system and deterrence of like conduct.

The Government, in its Proposed Findings of Fact and Conclusions of Law (Government Closing Brief), maintains that the nature of the marijuana activity as well as what it perceives as a lack of remorse, supports revocation. Gov't Closing. Br. at 4. As discussed, *supra,* the Respondent expressed an acknowledgement of wrongdoing at the hearing. Tr. at 77–79. Thus, the Government's argument in this regard is essentially that the Respondent has not said sufficiently that he regrets his actions, i.e., he is not sorry *enough.* While, admittedly, the tenor of the Respondent's testimony at the hearing did not reflect a high level of contrition, he did demonstrate an acknowledgement that his actions were illegal and that the punishments meted out by the criminal justice system were not unfair. Similarly, his thus-far unblemished compliance with conditions imposed by the Wisconsin Medical Board and the criminal court sentence demonstrates at least some level of commitment to rehabilitation. Even so, true remorse, to the extent that Respondent may possess it, was not patently evident from his presentation at the hearing. During his testimony, the Respondent gave the distinct impression that he was not so much sorry about his transgressions as he was sorry that he got caught and was laboring under the criminal and administrative consequences of that reality.

In support of its argument that Agency precedent calls for revocation, in its Closing Brief, the Government cites three cases, all of which are distinguishable from the present case. In *Arthur C. Rosenblatt, M.D.,* 55 FR 25901 (1990) and *Robert G. Crummie, M.D.*, 55 FR 5303 (1990), the Agency determined that the respondents not only grew marijuana, but also had significant controlled substance prescribing anomalies. The revocation issued in *Alan L. Ager, D.P.M.,* 63 FR 54732 (1998) was the result of sustained allegations that the respondent, less than a year and a half after being convicted of growing 1,719 marijuana plants, was caught (and ultimately convicted) of growing 135 more marijuana plants. *Id.* Not only was the respondent in *Ager* a recidivist who obviously learned nothing from his first conviction, but he produced marijuana in quantities far in excess of the established levels in this case.[50]

The cases cited in the Government's Closing Brief are distinguishable on other grounds as well, apart from the disparities in marijuana production scale and illegal prescribing practices. The respondent in *Crummie* untruthfully testified that he never used, possessed, or manufactured marijuana, and he never accepted responsibility or remorse for his misconduct. 55 FR at 5304. Relatedly, the respondent in *Ager* failed to offer an explanation for his misconduct, to accept responsibility or remorse, or to provide assurances he would no longer illegally manufacture marijuana in the future. 63 FR 54733. Unlike the cited cases, the Respondent in the instant case, despite his lukewarm remorse, explained the reasons for his illegal misconduct and at least articulated his assurance that he would never manufacture marijuana again.

The Government also cites in its closing brief *Gordon M. Acker, D.M.D.,* 52 FR 9962 (1987) for the proposition that DEA possesses the authority to revoke a registration for a registrant's felony conviction involving controlled substances, even if the respondent did not use his registration in the commission of his felonious actions. While the Government is certainly correct to the extent a felony conviction related to controlled substances is a factor to be considered in deciding whether revocation is appropriate, the facts of each matter are the operative elements which militate in favor of, or against, revocation. In *Acker,* the respondent participated during his dental school years in the largest cocaine organization ever prosecuted in Philadelphia. *Acker,* FR at 9963. The organization profited by millions of dollars per month, and the respondent acted as a redistributor, carrier, and money launderer for the enterprise. *Id.* Here, the Respondent's criminal behavior, while significant, pales in comparison to that of *Acker.* There is no evidence that the Respondent ever sold the marijuana he produced, nor is there evidence that the Respondent was part of a large scale, interstate criminal operation. Accordingly, because the facts of *Acker* and the present case as distinguishable, *Acker* does not compel the same result in this case.

That the cases cited by the Government do not compel the revocation it seeks is not to say that such an outcome would be undeserved or unauthorized. The evidence in this case supports a finding that the Government has established that the Respondent has been convicted of a felony under Wisconsin state law related to a Schedule I controlled substance and that he has also committed acts that are inconsistent with the public interest. Although the nature of the Respondent's controlled substance-related felony conviction and a careful balancing of the statutory public interest factors support the revocation of the Respondent's COR, the determination rendered by the Wisconsin State Medical Board that fastidious monitoring can sufficiently protect its interests in public safety, coupled with the Respondent's satisfactory compliance with the restrictions placed on him by the state criminal courts and the Wisconsin State Medical Board, add sufficient indicia of reliability to his professed acceptance of responsibility to support consideration of a sanction less than outright revocation. Accordingly, although the Government's petition for revocation is not wholly unreasonable under the circumstances, the legitimate interests of the Agency can be attained with the imposition of COR restrictions coupled with a period of suspension for a period no less than six (6) months from the

[50] This was also true in regarding the respondent in the *Crummie* case, who was caught growing fifty marijuana plants. 55 FR at 5304.

date that the Agency issues a final order in this matter.[51]

The Respondent's COR shall be restricted and conditioned in the following manner:

(1) The Respondent will comply with the terms of his criminal sentence and the conditions that are currently in effect, or are subsequently imposed by the criminal sentencing court and/or the Wisconsin Medical Board,[52] and render monthly reports demonstrating such compliance to an official designated by the DEA (designated DEA official) in a manner and format directed by DEA;

(2) The Respondent will provide the DEA designated official with the results of any and all urinalysis and/or toxicology reports related to drug screening tests administered during the period of the suspension and the restricted COR, irrespective of whether such tests have been or are directed by the criminal sentencing court, the Wisconsin Medical Board, and/or any other source, including (but not limited to) tests mandated by liability carriers and/or other regulatory bodies;

(3) The Respondent, at his own expense, will participate in such drug screening tests as may be, from time to time, required by the designated DEA official;

(4) Within a reasonable period, not to exceed thirty (30) days after the issuance of a final Agency decision in this case, the Respondent will execute a document consenting to any and all inspections of the Respondent's home and/or principal place of business conducted by DEA during the period of suspension; and,

(5) Any other reasonable conditions consistent with this decision that may be imposed by the Deputy Administrator in the final Agency decision issued in this case.

Failure to comply with any of the conditions specified above shall be grounds for the further suspension or revocation of the Respondent's registration.

Accordingly, the Respondent's Certificate of Registration should be *suspended* and *restricted* as set forth in this recommended decision.

[51] The Respondent's current COR expires by its own terms on January 31, 2011. In the event that a timely COR renewal application is filed pending final Agency action in this matter in accordance with 21 CFR 1301.36(i) and that application is granted in the final Agency decision, the period of suspension and restricted conditions set forth in this recommended decision may and should be applied to the COR as renewed.

[52] Thus, the conditions fixed by the Order of the Wisconsin Medical Board and the terms of the Respondent's criminal probation are adopted and incorporated herein as conditions of the restricted COR.

Dated: October 4, 2010

John J. Mulrooney, II

U.S. Administrative Law Judge

[FR Doc. 2011–19376 Filed 7–29–11; 8:45 am]

BILLING CODE 4410–09–P

DEPARTMENT OF LABOR

Employment and Training Administration

[TA–W–73,420; TA–W–73,420A; TA–W–73,420B]

Alticor, Inc., Including Access Business Group International LLC and Amway Corporation, Buena Park, CA; Alticor, Inc., Including Access Business Group International LLC and Amway Corporation, Including On-Site Leased Workers From Otterbase, Manpower, KForce and Robert Half, Ada, MI; Alticor, Inc., Including Access Business Group International LLC and Amway Corporation, Including On-Site Leased Workers From Helpmates, Lakeview, CA; Amended Certification Regarding Eligibility To Apply for Worker Adjustment Assistance

In accordance with section 223 of the Trade Act of 1974, as amended (''Act''), 19 U.S.C. 2273, the Department of Labor issued a Certification of Eligibility to Apply for Worker Adjustment Assistance on April 12, 2010, applicable to workers of Alticor, Inc., including Access Business Group International LLC and Amway Corporation, Buena Park, California. The workers are engaged in activities related to financial and procurement services. The Department's Notice of determination was published in the **Federal Register** on May 20, 2010 (75 FR 28300).

The Notice was amended on April 28, 2010 to include the Ada, Michigan location of the subject firm and on May 24, 2010 to include leased workers on-site at the Ada, Michigan location. The amended Notices were published in the **Federal Register** on May 12, 2010 (75 FR 26794–26795) and June 7, 2010 (75 FR 32221), respectively.

At the request of a State agency, the Department reviewed the certification for workers of the subject firm.

New findings show that the intent of the petitioner was to cover the Buena Park, California, Ada, Michigan, and Lakeview, California locations of the subject firm. The relevant data supplied by the subject firm to the Department during the initial investigation combined the aforementioned locations. Information reveals that workers leased from Helpmates were employed on-site at the Lakeview, California location of the subject firm. The Department has determined that on-site workers from Helpmates were sufficiently under the control of the subject firm to be covered by this certification.

Accordingly, the Department is amending the certification to include workers of the Lakeview, California location of Alticor, Inc., including Access Business Group International LLC and Amway Corporation and including on-site leased workers from Helpmates.

The intent of the Department's certification is to include all workers of the subject firm who were adversely affected by a shift in financial and procurement services to Costa Rica.

The amended notice applicable to TA–W–73,420, TA–W–73,420A and TA–W–73,420B are hereby issued as follows:

All workers of Alticor, Inc., including Access Business Group International LLC and Amway Corporation, Buena Park, California (TA–W–73,420) and Alticor, Inc., including Access Business Group International LLC and Amway Corporation, including on-site leased workers from Otterbase, Manpower, Kforce and Robert Half, Ada, Michigan, (TA–W–73,420A), and Alticor, Inc., including Access Business Group International LLC and Amway Corporation, including on-site leased workers from Helpmates, Lakeview, California (TA–W–73,420B), who became totally or partially separated from employment on or after February 1, 2009, through April 12, 2012, and all workers in the group threatened with total or partial separation from employment on date of certification through two years from the date of certification, are eligible to apply for adjustment assistance under Chapter 2 of Title II of the Trade Act of 1974, as amended.

Signed in Washington, DC, this 18th day of July 2010.

Del Min Amy Chen,

Certifying Officer, Office of Trade Adjustment Assistance.

[FR Doc. 2011–19343 Filed 7–29–11; 8:45 am]

BILLING CODE 4510–FN–P

DEPARTMENT OF LABOR

Employment and Training Administration

[TA–W–73,644]

Cinram Manufacturing, LLC, a Subsidiary of Cinram International, Including On-Site Leased Workers From OneSource Staffing Solutions, Canteen, Division of Compass Group and IKON Office Solutions, a Ricoh Company, Olyphant, PA; Amended Certification Regarding Eligibility To Apply for Worker Adjustment Assistance

In accordance with section 223 of the Trade Act of 1974, as amended (''Act''), 19 U.S.C. 2273, the Department of Labor (Department) issued a Certification of Eligibility to Apply for Worker Adjustment Assistance on July 16, 2010, applicable to workers of Cinram Manufacturing, LLC, a subsidiary of Cinram International, including on-site leased workers from OneSource Staffing Solutions, Olyphant, Pennsylvania. The workers are engaged in employment related to the production of optical media devices. The Department's Notice was published in the **Federal Register** on August 2, 2010 (75 FR 45162). On February 24, 2011, the Notice was amended to include on-site leased workers from Canteen, a division of Compass Group. The Department's amended Notice was published in the **Federal Register** on March 14, 2011 (76 FR 13668).

At the request of the State of Pennsylvania Department of Labor and Industry, the Department reviewed the certification for workers of the subject firm.

The company reports that workers leased from IKON Office Solutions, a Ricoh Company, were employed on-site at the Olyphant, Pennsylvania location of Cinram Manufacturing, LLC, a subsidiary of Cinram International. The Department has determined that these workers were sufficiently under the control of the subject firm to be considered leased workers.

Based on these findings, the Department is amending this certification to include workers leased from IKON Office Solutions, a Ricoh Company, working on-site at the Olyphant, Pennsylvania location of Cinram Manufacturing, LLC, a subsidiary of Cinram International.

The amended notice applicable to TA–W–73,644 is hereby issued as follows:

All workers of Cinram Manufacturing, LLC, a subsidiary of Cinram International, including on-site leased workers from OneSource Staffing Solutions, Canteen, a division of Compass Group, and IKON Office Solutions, A Ricoh Company, Olyphant, Pennsylvania, who became totally or partially separated from employment on or after March 4, 2009, through July 16, 2012, and all workers in the group threatened with total or partial separation from employment on the date of certification through two years from the date of certification, are eligible to apply for adjustment assistance under Chapter 2 of Title II of the Trade Act of 1974, as amended.

Signed at Washington, DC, this 20th day of July, 2011.

Del Min Amy Chen,

Certifying Officer, Office of Trade Adjustment Assistance.

[FR Doc. 2011–19339 Filed 7–29–11; 8:45 am]

BILLING CODE 4510–FN–P

DEPARTMENT OF LABOR

Employment and Training Administration

[TA–W–73,198]

West, a Thomson Reuters Business, Thomson Reuters Legal, Including On-Site Leased Workers From Adecco, Including a Teleworker Located in Albuquerque, NM Reporting to Eagan, MN; Amended Certification Regarding Eligibility To Apply for Worker Adjustment Assistance

In accordance with section 223 of the Trade Act of 1974, as amended (''Act''), 19 U.S.C. 2273, the Department of Labor (Department) issued a Certification of Eligibility to Apply for Worker Adjustment Assistance on June 21, 2010, applicable to workers of West, A Thomson Reuters Legal, including on-site leased workers from Adecco, Eagan, Minnesota. The workers are engaged in activities related to legal, business and regulatory print and electronic information published services. The Department's Notice was published in the **Federal Register** on July 7, 2010 (75 FR 39048).

At the request of the petitioner, the Department reviewed the certification for workers of the subject firm.

New information shows that a worker separation occurred involving a teleworker (Robert Louie) located in Albuquerque, New Mexico who reported to Eagan, Minnesota. Mr. Louie provided various activities related to legal, business and regulatory print and electronic information publishing services.

Based on these findings, the Department is amending this certification to include an employee of the subject firm who teleworked and reported to the Eagan, Minnesota facility.

The intent of the Department's certification is to include all workers of the subject firm who were adversely affected by a shift in legal, business and regulatory information publishing services to India and the Philippines.

The amended notice applicable to TA–W–73,198 is hereby issued as follows:

All workers of West, A Thomson Reuters Business, Thomson Reuter Legal, including on-site leased workers from Adecco, including a teleworker located in Albuquerque, New Mexico reporting to Eagan, Minnesota, who became totally or partially separated from employment on or after December 30, 2008 through June 21, 2012, and all workers in the group threatened with total or partial separation from employment on date of certification through two years from the date of certification, are eligible to apply for adjustment assistance under Chapter 2 of Title II of the Trade Act of 1974, as amended.

Signed in Washington, DC, this 20th day of July, 2011.

Del Min Amy Chen,

Certifying Officer, Office of Trade Adjustment Assistance.

[FR Doc. 2011–19342 Filed 7–29–11; 8:45 am]

BILLING CODE 4510–FN–P

DEPARTMENT OF LABOR

Employment and Training Administration

Notice of Determinations Regarding Eligibility To Apply for Worker Adjustment Assistance and Alternative Trade Adjustment Assistance

In accordance with section 223 of the Trade Act of 1974, as amended (19 U.S.C. 2273) the Department of Labor herein presents summaries of determinations regarding eligibility to apply for trade adjustment assistance for workers (TA–W) number and alternative trade adjustment assistance (ATAA) by (TA–W) number issued during the period of July 11, 2011 through July 15, 2011.

In order for an affirmative determination to be made for workers of a primary firm and a certification issued regarding eligibility to apply for worker adjustment assistance, each of the group eligibility requirements of Section 222(a) of the Act must be met.

I. Section (a)(2)(A) all of the following must be satisfied:

A. a significant number or proportion of the workers in such workers' firm, or an appropriate subdivision of the firm, have become totally or partially separated, or are threatened to become totally or partially separated;

B. the sales or production, or both, of such firm or subdivision have decreased absolutely; and

C. increased imports of articles like or directly competitive with articles produced by such firm or subdivision have contributed importantly to such workers' separation or threat of separation and to the decline in sales or production of such firm or subdivision; or

II. Section (a)(2)(B) both of the following must be satisfied:

A. a significant number or proportion of the workers in such workers' firm, or an appropriate subdivision of the firm, have become totally or partially separated, or are threatened to become totally or partially separated;

B. there has been a shift in production by such workers' firm or subdivision to a foreign country of articles like or directly competitive with articles which are produced by such firm or subdivision; and

C. One of the following must be satisfied:

1. the country to which the workers' firm has shifted production of the articles is a party to a free trade agreement with the United States;

2. the country to which the workers' firm has shifted production of the articles to a beneficiary country under the Andean Trade Preference Act, African Growth and Opportunity Act, or the Caribbean Basin Economic Recovery Act; or

3. there has been or is likely to be an increase in imports of articles that are like or directly competitive with articles which are or were produced by such firm or subdivision.

Also, in order for an affirmative determination to be made for secondarily affected workers of a firm and a certification issued regarding eligibility to apply for worker adjustment assistance, each of the group eligibility requirements of Section 222(b) of the Act must be met.

(1) significant number or proportion of the workers in the workers' firm or an appropriate subdivision of the firm have become totally or partially separated, or are threatened to become totally or partially separated;

(2) the workers' firm (or subdivision) is a supplier or downstream producer to a firm (or subdivision) that employed a group of workers who received a certification of eligibility to apply for trade adjustment assistance benefits and such supply or production is related to the article that was the basis for such certification; and

(3) either—

(A) the workers' firm is a supplier and the component parts it supplied for the firm (or subdivision) described in paragraph (2) accounted for at least 20 percent of the production or sales of the workers' firm; or

(B) a loss of business by the workers' firm with the firm (or subdivision) described in paragraph (2) contributed importantly to the workers' separation or threat of separation.

In order for the Division of Trade Adjustment Assistance to issue a certification of eligibility to apply for Alternative Trade Adjustment Assistance (ATAA) for older workers, the group eligibility requirements of Section 246(a)(3)(A)(ii) of the Trade Act must be met.

1. Whether a significant number of workers in the workers' firm are 50 years of age or older.

2. Whether the workers in the workers' firm possess skills that are not easily transferable.

3. The competitive conditions within the workers' industry (i.e., conditions within the industry are adverse).

Affirmative Determinations for Worker Adjustment Assistance

The following certifications have been issued. The date following the company name and location of each determination references the impact date for all workers of such determination.

None.

Affirmative Determinations for Worker Adjustment Assistance and Alternative Trade Adjustment Assistance

The following certifications have been issued. The date following the company name and location of each determination references the impact date for all workers of such determination.

The following certifications have been issued. The requirements of Section 222(a)(2)(A) (increased imports) and Section 246(a)(3)(A)(ii) of the Trade Act have been met.

TA–W–80,128; Wheeler Logging, White Swan, WA: April 21, 2010

TA–W–80,201; Bradington-Young LLC, Hickory, NC: February 19, 2011

TA–W–80,201A; Bradington-Young LLC, Cherryville, NC: February 19, 2011

TA–W–80,201B; Bradington-Young LLC, Hickory, NC: May 25, 2010

TA–W–80,201C; Bradington-Young LLC, Hickory, NC: February 19, 2011

TA–W–80,212; Unlimited Services, Inc., Oconto, WI: June 1, 2010

The following certifications have been issued. The requirements of Section 222(a)(2)(B) (shift in production) and Section 246(a)(3)(A)(ii) of the Trade Act have been met.

TA–W–80,096; Metal Textiles Corporation, Edison, NJ: April 8, 2010

TA–W–80,113; Diversey, Inc., Sturtevant, WI: April 15, 2010 TA–W–80,123; Harman, Washington, MO: April 18, 2010

TA–W–80,182; Palmer Johnson Yacht's LLC, Sturgeon Bay, WI: May 4, 2010

TA–W–80,193; Vicount Industries, Inc., Farmington Hills, MI: May 23, 2010

TA–W–80,196; T–Shirt International, Inc., Franklin, WI: May 23, 2010

TA–W–80,196A; T–Shirt International, Inc., Oak Creek, WI: May 23, 2010

Negative Determinations for Worker Adjustment Assistance and Alternative Trade Adjustment Assistance

In the following cases, the investigation revealed that the eligibility criteria for worker adjustment assistance have not been met for the reasons specified.

Because the workers of the firm are not eligible to apply for TAA, the workers cannot be certified eligible for ATAA.

The investigation revealed that criteria (a)(2)(A)(I.A.) and (a)(2)(B)(II.A.) (employment decline) have not been met.

TA–W–80,091; G & G Garments, New York, NY

The investigation revealed that criteria (a)(2)(A)(I.C.) (increased imports) and (a)(2)(B)(II.B.) (shift in production to a foreign country) have not been met.

TA–W–80,204; Starks Manufacturing LLC, Paris, AR

TA–W–80,204A; Starks Manufacturing LLC, Russellville, AR

The workers' firm does not produce an article as required for certification under Section 222 of the Trade Act of 1974.

TA–W–80,036; Jabil Circuit of Texas, McAllen, TX

TA–W–80,141; Bank of America, Fort Wayne, IN

TA–W–80,144; Paramount Home Furnishings, Inc., Greensboro, NC

Determinations Terminating Investigations of Petitions for Worker Adjustment Assistance

After notice of the petitions was published in the **Federal Register** and on the Department's Web site, as required by Section 221 of the Act (19 U.S.C. 2271), the Department initiated investigations of these petitions.

None.

I hereby certify that the aforementioned determinations were issued during the period of July 11, 2011 through July 15, 2011. Copies of

these determinations may be requested under The Freedom of Information Act. Requests may be submitted by fax, courier services, or mail to FOIA Disclosure Officer, Office of Trade Adjustment Assistance (ETA), U.S. Department of Labor, 200 Constitution Avenue, NW., Washington, DC 20210 or *tofoiarequest@dol.gov.* These determinations also are available on the Department's Web site at *http://www.doleta.gov/tradeact* under the searchable listing of determinations.

Dated: July 22, 2011.

Michael W. Jaffe,

Certifying Officer, Office, Trade Adjustment Assistance.

[FR Doc. 2011–19341 Filed 7–29–11; 8:45 am]

BILLING CODE 4510–FN–P

DEPARTMENT OF LABOR

Employment and Training Administration

Investigations Regarding Certifications of Eligibility To Apply for Worker Adjustment Assistance and Alternative Trade Adjustment Assistance

Petitions have been filed with the Secretary of Labor under section 221(a) of the Trade Act of 1974 (''the Act'') and are identified in the Appendix to this notice. Upon receipt of these petitions, the Director of the Division of Trade Adjustment Assistance, Employment and Training Administration, has instituted investigations pursuant to Section 221(a) of the Act.

The purpose of each of the investigations is to determine whether the workers are eligible to apply for adjustment assistance under Title II, Chapter 2, of the Act. The investigations will further relate, as appropriate, to the determination of the date on which total or partial separations began or threatened to begin and the subdivision of the firm involved.

The petitioners or any other persons showing a substantial interest in the subject matter of the investigations may request a public hearing, provided such request is filed in writing with the Director, Office of Trade Adjustment Assistance.

Interested persons are invited to submit written comments regarding the subject matter of the investigations to the Director, Office of Trade Adjustment Assistance, at the address shown below, not later than August 11, 2011.

The petitions filed in this case are available for inspection at the Office of the Director, Office of Trade Adjustment Assistance, Employment and Training Administration, U.S. Department of Labor, Room N–5428, 200 Constitution Avenue, NW., Washington, DC 20210.

Signed at Washington, DC, this 21st day of July 2011.

Michael W. Jaffe,

Certifying Officer, Office of Trade Adjustment Assistance.

APPENDIX

[18 TAA petitions instituted between 7/11/11 and 7/15/11]

TA–W	Subject firm (petitioners)	Location	Date of institution	Date of petition
80274	OmniVision Technologies Inc. (State/One-Stop)	Boulder, CO	07/11/11	07/08/11
80275	Pfizer, Inc. (State/One-Stop)	Groton, CT	07/11/11	07/08/11
80276	Foster Needle Company Inc. (Company)	Manitowoc, WI	07/11/11	06/30/11
80277	Vermont Transformer (Workers)	Saint Albans, VT	07/11/11	07/07/11
80278	Wells Fargo Home Mortgage (State/One-Stop)	Costa Mesa, CA	07/11/11	07/06/11
80279	Paris Accessories, Inc. (State/One-Stop)	Yellville, AR	07/12/11	07/11/11
80280	Client Services, Inc. (Workers)	Denison, TX	07/12/11	07/11/11
80281	Priceline.com (State/One-Stop)	Grand Rapids, MI	07/12/11	06/21/11
80282	GH Metals Solutions (State/One-Stop)	Fort Payne, AL	07/12/11	06/16/11
80283	Craftwood, Inc. (Company)	High Point, NC	07/13/11	07/13/11
80284	Duro Bag Manufacturing Company (Company)	Richmond, VA	07/13/11	07/12/11
80285	ETS Tan (Company)	Indianapolis, IN	07/13/11	07/13/11
80286	The Columbus Dispatch (Workers)	Columbus, OH	07/13/11	07/12/11
80287	Anthony Temperment (Workers)	Alsip, IL	07/14/11	07/13/11
80288	Croscill Acquisition, LLC (Company)	Oxford, NC	07/14/11	06/14/11
80289	SAFC Biosciences Inc. (Company)	Denver, PA	07/14/11	07/13/11
80290	MGM Resorts International Operations, Inc. (Workers)	Las Vegas, NV	07/15/11	07/14/11
80291	Iridio Color Services (State/One-Stop)	Seattle, WA	07/15/11	07/14/11

[FR Doc. 2011–19340 Filed 7–29–11; 8:45 am]

BILLING CODE 4510–FN–P

NATIONAL FOUNDATION ON THE ARTS AND THE HUMANITIES

National Endowment for the Arts; Proposed Collection; Comment Request

ACTION: Notice.

SUMMARY: The National Endowment for the Arts (NEA), as part of its continuing effort to reduce paperwork and respondent burden, conducts a preclearance consultation program to provide the general public and federal agencies with an opportunity to comment on proposed and/or continuing collections of information in accordance with the Paperwork Reduction Act of 1995 (PRA95) [44 U.S.C. 3506(c)(A)]. This program helps to ensure that requested data can be provided in the desired format, reporting burden (time and financial resources) is minimized, collection instruments are clearly understood, and the impact of collection requirements on respondents can be properly assessed. Currently, the NEA is soliciting comments concerning the proposed information collection on grant applicant satisfaction with application guidance and materials provided on the NEA website and by NEA staff. A copy of the current information collection request can be obtained by contacting the office listed below in the address section of this notice.

DATES: Written comments must be submitted to the office listed in the address section below on or before September 1, 2011. The NEA is

particularly interested in comments which:

- Evaluate whether the proposed collection of information is necessary for the proper performance of the functions of the agency, including whether the information will have practical utility;
- Evaluate the accuracy of the agency's estimate of the burden of the proposed collection of information including the validity of the methodology and assumptions used;
- Enhance the quality, utility, and clarity of the information to be collected; and
- Minimize the burden of the collection of information on those who are to respond, including through the use of appropriate automated, electronic, mechanical, or other technological collection techniques or other forms of information technology, *e.g.,* permitting electronic submissions of responses.

ADDRESSES: Sunil Iyengar, National Endowment for the Arts, 1100 Pennsylvania Avenue, NW., Room 616, Washington, DC 20506–0001, telephone (202) 682–5424 (this is not a toll-free number), fax (202) 682–5677.

Kathleen Edwards,

Director, Administrative Services, National Endowment for the Arts.

[FR Doc. 2011–19298 Filed 7–29–11; 8:45 am]

BILLING CODE 7537–01–P

NATIONAL LABOR RELATIONS BOARD

Sunshine Act Meetings: August 2011

TIME AND DATES: All meetings are held at 2:30 p.m. Wednesday, August 3; Wednesday, August 10; Wednesday, August 17; Wednesday, August 24; Wednesday, August 31.

PLACE: Board Agenda Room, No. 11820, 1099 14th St., NW., Washington DC 20570.

STATUS: Closed.

MATTERS TO BE CONSIDERED: Pursuant to § 102.139(a) of the Board's Rules and Regulations, the Board or a panel thereof will consider ''the issuance of a subpoena, the Board's participation in a civil action or proceeding or an arbitration, or the initiation, conduct, or disposition * * * of particular representation or unfair labor practice proceedings under section 8, 9, or 10 of the [National Labor Relations] Act, or any court proceedings collateral or ancillary thereto.'' See also 5 U.S.C. 552b(c)(10).

FOR FURTHER INFORMATION CONTACT: *Henry S. Breiteneicher,* (202) 273–2917.

Dated: July 28, 2011.

Henry S. Breiteneicher,

Associate Executive Secretary.

[FR Doc. 2011–19486 Filed 7–28–11; 4:15 pm]

BILLING CODE 7545–01–P

POSTAL REGULATORY COMMISSION

[Docket No. A2011–28; Order No. 771]

Post Office Closing

AGENCY: Postal Regulatory Commission.

ACTION: Notice.

SUMMARY: This document informs the public that an appeal of the closing of the Goodwin, Arkansas post office has been filed. It identifies preliminary steps and provides a procedural schedule. Publication of this document will allow the Postal Service, petitioners, and others to take appropriate action.

DATES: *Administrative record due (from Postal Service*): August 8, 2011; *deadline for notices to intervene:* August 22, 2011. *See* the Procedural Schedule in the **SUPPLEMENTARY INFORMATION** section for other dates of interest.

ADDRESSES: Submit comments electronically by accessing the ''Filing Online'' link in the banner at the top of the Commission's Web site (*http://www.prc.gov*) or by directly accessing the Commission's Filing Online system at *https://www.prc.gov/prc-pages/filing-online/login.aspx.* Commenters who cannot submit their views electronically should contact the person identified in the **FOR FURTHER INFORMATION CONTACT** section as the source for case-related information for advice on alternatives to electronic filing.

FOR FURTHER INFORMATION CONTACT: Stephen L. Sharfman, General Counsel, at 202–789–6820 (case-related information) or *DocketAdmins@prc.gov* (electronic filing assistance).

SUPPLEMENTARY INFORMATION: Notice is hereby given that, pursuant to 39 U.S.C. 404(d), on July 22, 2011, the Commission received a petition for review of the Postal Service's determination to close the post office in Goodwin, Arkansas. The petition was filed by Randy Jones (Petitioner). The Commission hereby institutes a proceeding under 39 U.S.C. 404(d)(5) and establishes Docket No. A2011–28 to consider Petitioner's appeal. If Petitioner would like to further explain his position with supplemental information or facts, Petitioner may either file a Participant Statement on PRC Form 61 or file a brief with the Commission no later than August 26, 2011.

Categories of issues apparently raised. Petitioner contends that: (1) The Postal Service failed to adequately consider the economic savings resulting from the closure (*see* 39 U.S.C. 404(d)(2)(A)(iv)); and (2) that the Postal Service failed to consider whether or not it will continue to provide a maximum degree of effective and regular postal services to the community (*see* 39 U.S.C. 404(d)(2)(A)(iii)).

After the Postal Service files the administrative record and the Commission reviews it, the Commission may find that there are more legal issues than those set forth above, or that the Postal Service's determination disposes of one or more of those issues. The deadline for the Postal Service to file the applicable administrative record with the Commission is August 8, 2011. *See* 39 CFR 3001.113. In addition, the due date for any responsive pleading by the Postal Service to this Notice is August 8, 2011.

Availability; Web site posting. The Commission has posted the appeal and supporting material on its Web site at *http://www.prc.gov.* Additional filings in this case and participants' submissions also will be posted on the Commission's Web site, if provided in electronic format or amenable to conversion, and not subject to a valid protective order. Information on how to use the Commission's Web site is available online or by contacting the Commission's webmaster via telephone at 202–789–6873 or via electronic mail at *prc-webmaster@prc.gov.*

The appeal and all related documents are also available for public inspection in the Commission's docket section. Docket section hours are 8 a.m. to 4:30 p.m., Monday through Friday, except on Federal government holidays. Docket section personnel may be contacted via electronic mail at *prc-dockets@prc.gov* or via telephone at 202–789–6846.

Filing of documents. All filings of documents in this case shall be made using the Internet (Filing Online) pursuant to Commission rules 9(a) and 10(a) at the Commission's Web site, *http://www.prc.gov,* unless a waiver is obtained. *See* 39 CFR 3001.9(a) and 3001.10(a). Instructions for obtaining an account to file documents online may be found on the Commission's Web site or by contacting the Commission's docket section at *prc-dockets@prc.gov* or via telephone at 202–789–6846.

The Commission reserves the right to redact personal information which may infringe on an individual's privacy

rights from documents filed in this proceeding.

Intervention. Persons, other than the Petitioner and respondent, wishing to be heard in this matter are directed to file a notice of intervention. *See* 39 CFR 3001.111(b). Notices of intervention in this case are to be filed on or before August 22, 2011. A notice of intervention shall be filed using the Internet (Filing Online) at the Commission's Web site unless a waiver is obtained for hardcopy filing. *See* 39 CFR 3001.9(a) and 3001.10(a).

Further procedures. By statute, the Commission is required to issue its decision within 120 days from the date it receives the appeal. *See* 39 U.S.C. 404(d)(5). A procedural schedule has been developed to accommodate this statutory deadline. In the interest of expedition, in light of the 120-day decision schedule, the Commission may request the Postal Service or other participants to submit information or memoranda of law on any appropriate issue. As required by the Commission rules, if any motions are filed, responses are due 7 days after any such motion is filed. *See* 39 CFR 3001.21.

It is ordered:

1. The Postal Service shall file the applicable administrative record regarding this appeal no later than August 8, 2011.

2. Any responsive pleading by the Postal Service to this Notice is due no later than August 8, 2011.

3. The procedural schedule listed below is hereby adopted.

4. Pursuant to 39 U.S.C. 505, Cassandra L. Hicks is designated officer of the Commission (Public Representative) to represent the interests of the general public.

5. The Secretary shall arrange for publication of this Notice and Order in the **Federal Register**.

PROCEDURAL SCHEDULE

July 22, 2011	Filing of Appeal.
August 8, 2011	Deadline for the Postal Service to file the applicable administrative record in this appeal.
August 8, 2011	Deadline for the Postal Service to file any responsive pleading.
August 22, 2011	Deadline for notices to intervene (*see* 39 CFR 3001.111(b)).
August 26, 2011	Deadline for Petitioners' Form 61 or initial brief in support of petition (*see* 39 CFR 3001.115(a) and (b)).
September 15, 2011	Deadline for answering brief in support of the Postal Service (*see* 39 CFR 3001.115(c)).
September 30, 2011	Deadline for reply briefs in response to answering briefs (*see* 39 CFR 3001.115(d)).
October 7, 2011	Deadline for motions by any party requesting oral argument; the Commission will schedule oral argument only when it is a necessary addition to the written filings (*see* 39 CFR 3001.116).
November 21, 2011	Expiration of the Commission's 120-day decisional schedule (*see* 39 U.S.C. 404(d)(5)).

By the Commission.

Shoshana M. Grove,

Secretary.

[FR Doc. 2011–19380 Filed 7–29–11; 8:45 am]

BILLING CODE 7710–FW–P

SECURITIES AND EXCHANGE COMMISSION

[Release No. 34–64961; File No. SR–FINRA–2011–026]

Self-Regulatory Organizations; Financial Industry Regulatory Authority, Inc.; Notice of Filing and Immediate Effectiveness of Proposed Rule Change Regarding Cancellation or Rescheduling Fees for Qualification Examinations and Continuing Education Sessions

July 26, 2011.

Pursuant to Section 19(b)(1) of the Securities Exchange Act of 1934 (''Act'')[1] and Rule 19b–4 thereunder,[2] notice is hereby given that on July 15, 2011, Financial Industry Regulatory Authority, Inc. (''FINRA'') filed with the Securities and Exchange Commission (''SEC'' or ''Commission'') the proposed rule change as described in Items I, II, and III below, which Items have been prepared by FINRA. The Commission is publishing this notice to solicit comments on the proposed rule change from interested persons.

I. Self-Regulatory Organization's Statement of the Terms of Substance of the Proposed Rule Change

FINRA is proposing to amend Section 4(c) of Schedule A to the FINRA By-Laws to address cancellation/rescheduling fees for qualification examinations and continuing education sessions. Specifically, the proposed rule change would (1) Establish a fee for individuals who cancel or reschedule a qualification examination or Regulatory Element Continuing Education (''Regulatory Element'') session three to ten business days prior to the appointment date, and (2) add a reference to the fee for individuals who fail to timely appear for a scheduled Regulatory Element session or who cancel or reschedule such a session within two business days prior to the appointment date.

The text of the proposed rule change is available on FINRA's Web site at *http://www.finra.org,* at the principal office of FINRA, and at the Commission's Public Reference Room.

II. Self-Regulatory Organization's Statement of the Purpose of, and Statutory Basis for, the Proposed Rule Change

In its filing with the Commission, FINRA included statements concerning the purpose of and basis for the proposed rule change and discussed any comments it received on the proposed rule change. The text of these statements may be examined at the places specified in Item IV below. FINRA has prepared summaries, set forth in sections A, B, and C below, of the most significant aspects of such statements.

A. Self-Regulatory Organization's Statement of the Purpose of, and Statutory Basis for, the Proposed Rule Change

1. Purpose

As discussed in further detail below, the proposed rule change amends Section 4(c) of Schedule A to the FINRA By-Laws to (1) Establish a fee for individuals who cancel or reschedule a qualification examination or Regulatory Element session three to ten business days prior to the appointment date, and (2) add a reference to the fee for individuals who fail to timely appear for a scheduled Regulatory Element session or who cancel or reschedule such a session within two business days prior to the appointment date.

Three- to Ten-Day Cancellation/Rescheduling Fee

Pursuant to NASD Rules 1021 and 1031, any person engaged in the investment banking or securities business of a FINRA member must register with FINRA in the category of registration appropriate to the function

[1] 15 U.S.C. 78s(b)(1).

[2] 17 CFR 240.19b–4.

the individual will be performing. As part of the registration process, securities professionals must pass a qualification examination to demonstrate competence in the areas in which they will work. In addition, such individuals must complete the appropriate Regulatory Element program subsequent to their initial qualification and registration with FINRA, as set forth in NASD Rule 1120.[3] The qualification examinations and Regulatory Element programs cover a broad range of subjects regarding financial markets and products, individual responsibilities, securities industry rules, and regulatory structure. FINRA develops, maintains, and delivers all qualification examinations and Regulatory Element programs for individuals who are registered or seeking registration with FINRA. FINRA also delivers examinations sponsored by the North American Securities Administrators Association, the National Futures Association, the Federal Deposit Insurance Corporation, and others. FINRA currently administers examinations and Regulatory Element programs via computer at testing centers operated by vendors under contract with FINRA.

To request and schedule an appointment for a qualification examination, a FINRA member must file a Form U4 (Uniform Application for Securities Industry Registration or Transfer) through the Central Registration Depository (''Web CRD®'').[4] After the request is processed, a scheduling window will be posted on Web CRD. For Regulatory Element programs, registered persons in covered registration categories will automatically become enrolled for the requisite program on the second anniversary of their initial securities registration and every three years thereafter. Once an individual or an individual's firm receives the enrollment notification for an examination or Regulatory Element session, the individual may then contact a FINRA authorized testing center to schedule an appointment.

After an examination or Regulatory Element session has been scheduled, an individual may cancel or reschedule the appointment by contacting the testing center. Currently, FINRA does not impose a fee for cancelling or rescheduling an appointment if it is done by noon two business days before the scheduled appointment. FINRA charges a cancellation fee equal to the examination or Regulatory Element session fee if this deadline is not met, if an individual does not appear for an appointment, or if an individual arrives so late for an appointment that the examination or Regulatory Element session cannot begin without disrupting the testing center's schedule.[5]

FINRA has determined that individuals who cancel or reschedule an appointment more than two business days before the scheduled appointment date also place an administrative burden on test-delivery vendors and degrade the efficiency of test center resource utilization. To discourage such behavior, FINRA is proposing to implement a fee for individuals who cancel or reschedule a qualification examination or Regulatory Element session within three to ten business days of a scheduled appointment date.[6] The amount of the proposed fee would be one-half of the fee of the examination or Regulatory Element session being cancelled or rescheduled.[7] FINRA believes that this fee will help to control the overall costs associated with the delivery of examinations and Regulatory Element programs and the resultant examination and Regulatory Element session fees charged to individuals for examinations and Regulatory Element programs.

Continuing Education Failure To Timely Appear/Late Cancellation or Rescheduling Fee

As previously mentioned, FINRA assesses a fee equal to the examination or Regulatory Element session fee to individuals who fail to timely appear for an appointment or who cancel or reschedule an examination or Regulatory Element session within two business days of the scheduled appointment date.[8] Although Section 4(c) of Schedule A to the FINRA By-Laws currently sets forth this fee for qualification examinations, it does not set forth the fee with respect to the Regulatory Element program. Consequently, FINRA is proposing to amend Section 4(c) of Schedule A to the FINRA By-Laws to add a reference to this Regulatory Element program fee. The proposed rule change would also specifically reference the time period for which this fee applies (*i.e.,* within two business days prior to the appointment date).

FINRA has filed the proposed rule change for immediate effectiveness. FINRA is proposing that the implementation date of the proposed rule change will be September 1, 2011.

2. Statutory Basis

FINRA believes that the proposed rule change is consistent with the provisions of Section 15A of the Act,[9] in general, and with Section 15A(b)(5) of the Act,[10] in particular, in that it provides for the equitable allocation of reasonable dues, fees and other charges among members and issuers and other persons using any facility or system which FINRA operates or controls. FINRA believes that it is an equitable allocation to assess a fee on those individuals who cancel a qualification examination or Regulatory Element session within three to ten business days of a scheduled appointment date, because such behavior places an administrative burden on test-delivery vendors and degrades the efficiency of test center resource utilization. FINRA further believes that the amount of the fee, which is one-half of the current fee for individuals who fail to appear for a scheduled appointment or who cancel/reschedule an appointment within two business days of a scheduled appointment date, is reasonable because it will help to control the overall costs associated with the delivery of examinations and Regulatory Element programs while also recognizing the lesser burden that results from those individuals who provide additional notice by cancelling/rescheduling an appointment three to ten business days

[3] The SEC has approved the adoption of NASD Rule 1120 (Continuing Education Requirements) as FINRA Rule 1250 (Continuing Education Requirements) in the consolidated FINRA rulebook with certain changes. *See* Securities Exchange Act Release No. 64687 (June 16, 2011), 76 FR 36586 (June 22, 2011) (Order Approving SR–FINRA–2011–013). FINRA will issue a *Regulatory Notice* announcing the effective date of FINRA Rule 1250 in the near future.

[4] Individuals who are not employed or associated with a FINRA member must file a Form U10 (Uniform Examination Request for Non-FINRA candidates) with FINRA to schedule an examination.

[5] Further information about the cancellation policy can be found on FINRA's Web site at *http://www.finra.org/Industry/Compliance/Registration/QualificationsExams/RegisteredReps/Qualifications/P120071.*

[6] The cancellation/rescheduling fee will be assessed for the qualification examinations set forth in Section 4(c) of Schedule A to the FINRA By-Laws and all Regulatory Element programs. In addition, depending on the terms of agreement, the fee also may apply for those qualification examinations that FINRA delivers for other entities.

[7] The fee must be paid at the time of cancellation or rescheduling. In those circumstances where the fee is not paid in a timely manner, FINRA, instead, will assess a fee equal to the examination or Regulatory Element session fee if the individual does not appear for the scheduled appointment.

[8] FINRA considers an individual who fails to cancel or reschedule an examination or Regulatory Element session by noon two business days before the scheduled appointment to have failed timely to cancel or reschedule the appointment under Section 4(c)(2) of Schedule A to the FINRA By-Laws. *See supra* note 7.

[9] 15 U.S.C. 78*o*–3(b)(5).

[10] *Id.*

before the scheduled appointment date. FINRA further believes that the amount of the fee is reasonable because it will dissuade individuals from cancelling or rescheduling an appointment three to ten business days before the scheduled appointment date.

B. Self-Regulatory Organization's Statement on Burden on Competition

FINRA does not believe that the proposed rule change will result in any burden on competition that is not necessary or appropriate in furtherance of the purposes of the Act.

C. Self-Regulatory Organization's Statement on Comments on the Proposed Rule Change Received From Members, Participants, or Others

Written comments were neither solicited nor received.

III. Date of Effectiveness of the Proposed Rule Change and Timing for Commission Action

The foregoing rule change has become effective pursuant to Section 19(b)(3)(A) of the Act [11] and paragraph (f)(2) of Rule 19b–4 thereunder.[12] At any time within 60 days of the filing of the proposed rule change, the Commission summarily may temporarily suspend such rule change if it appears to the Commission that such action is necessary or appropriate in the public interest, for the protection of investors, or otherwise in furtherance of the purposes of the Act. If the Commission takes such action, the Commission shall institute proceedings to determine whether the proposed rule should be approved or disapproved.

IV. Solicitation of Comments

Interested persons are invited to submit written data, views, and arguments concerning the foregoing, including whether the proposed rule change is consistent with the Act. Comments may be submitted by any of the following methods:

Electronic Comments

- Use the Commission's Internet comment form (*http://www.sec.gov/rules/sro.shtml*); or
- Send an e-mail to *rule-comments@sec.gov.* Please include File Number SR–FINRA–2011–026 on the subject line.

Paper Comments

- Send paper comments in triplicate to Elizabeth M. Murphy, Secretary, Securities and Exchange Commission, 100 F Street, NE., Washington, DC 20549–1090.

All submissions should refer to File Number SR–FINRA–2011–026. This file number should be included on the subject line if e-mail is used. To help the Commission process and review your comments more efficiently, please use only one method. The Commission will post all comments on the Commission's Internet Web site (*http://www.sec.gov/rules/sro.shtml*). Copies of the submission, all subsequent amendments, all written statements with respect to the proposed rule change that are filed with the Commission, and all written communications relating to the proposed rule change between the Commission and any person, other than those that may be withheld from the public in accordance with the provisions of 5 U.S.C. 552, will be available for Web site viewing and printing in the Commission's Public Reference Room, 100 F Street, NE., Washington, DC 20549, on official business days between the hours of 10 a.m. and 3 p.m. Copies of such filing also will be available for inspection and copying at the principal office of FINRA. All comments received will be posted without change; the Commission does not edit personal identifying information from submissions. You should submit only information that you wish to make publicly available. All submissions should refer to File Number SR–FINRA–2011–026 and should be submitted on or before August 22, 2011.

For the Commission, by the Division of Trading and Markets, pursuant to delegated authority.[13]

Elizabeth M. Murphy,

Secretary.

[FR Doc. 2011–19324 Filed 7–29–11; 8:45 am]

BILLING CODE 8011–01–P

[11] 15 U.S.C. 78s(b)(3)(A).

[12] 17 CFR 240.19b–4(f)(2).

[13] 17 CFR 200.30–3(a)(12).

SECURITIES AND EXCHANGE COMMISSION

[Release No. 34–64967; File No. SR–NYSEArca–2011–48]

Self-Regulatory Organizations; NYSE Arca, Inc.; Notice of Filing of Proposed Rule Change To List and Trade Shares of the Teucrium Wheat Fund, the Teucrium Soybean Fund and the Teucrium Sugar Fund Under NYSE Arca Equities Rule 8.200, Commentary .02

July 26, 2011.

Pursuant to Section 19(b)(1) of the Securities Exchange Act of 1934 (the ''Act'') [1] and Rule 19b–4 thereunder,[2] notice is hereby given that, on July 11, 2011, NYSE Arca, Inc. (''NYSE Arca'' or the ''Exchange'') filed with the Securities and Exchange Commission (the ''Commission'') the proposed rule change as described in Items I and II below, which Items have been prepared by the Exchange. The Commission is publishing this notice to solicit comments on the proposed rule change from interested persons.

I. Self-Regulatory Organization's Statement of the Terms of Substance of the Proposed Rule Change

The Exchange proposes to list and trade shares of the Teucrium Wheat Fund, the Teucrium Soybean Fund and the Teucrium Sugar Fund under NYSE Arca Equities Rule 8.200. The text of the proposed rule change is available on the Exchange's Web site at *http://www.nyse.com,* at the Exchange's principal office and at the Commission's Public Reference Room.

II. Self-Regulatory Organization's Statement of the Purpose of, and Statutory Basis for, the Proposed Rule Change

In its filing with the Commission, the self-regulatory organization included statements concerning the purpose of, and basis for, the proposed rule change and discussed any comments it received on the proposed rule change. The text of those statements may be examined at the places specified in Item IV below. The Exchange has prepared summaries, set forth in sections A, B, and C below, of the most significant parts of such statements.

A. Self-Regulatory Organization's Statement of the Purpose of, and the Statutory Basis for, the Proposed Rule Change

1. Purpose

NYSE Arca Equities Rule 8.200, Commentary .02 permits the trading of Trust Issued Receipts (''TIRs'') either by listing or pursuant to unlisted trading privileges (''UTP'').[3] The Exchange proposes to list and trade shares (''Shares'') of the Teucrium Wheat Fund, the Teucrium Soybean Fund and the Teucrium Sugar Fund (each a

[1] 15 U.S.C. 78s(b)(1).

[2] 17 CFR 240.19b–4.

[3] Commentary .02 to NYSE Arca Equities Rule 8.200 applies to TIRs that invest in ''Financial Instruments.'' The term ''Financial Instruments,'' as defined in Commentary .02(b)(4) to NYSE Arca Equities Rule 8.200, means any combination of investments, including cash; securities; options on securities and indices; futures contracts; options on futures contracts; forward contracts; equity caps, collars and floors; and swap agreements.

''Fund'' and, collectively, the ''Funds'') pursuant to NYSE Arca Equities Rule 8.200.

The Exchange notes that the Commission has previously approved the listing and trading of other issues of TIRs on the American Stock Exchange LLC,[4] trading on NYSE Arca pursuant to UTP,[5] and listing on NYSE Arca.[6] Among these is the Teucrium Corn Fund, a series of the Teucrium Commodity Trust (''Trust'').[7] In addition, the Commission has approved the listing and trading of other exchange-traded fund-like products linked to the performance of underlying commodities.[8]

The Shares represent beneficial ownership interests in the Funds, as described in the Registration Statements for the Funds.[9] The Funds are commodity pools that are series of the Trust, a Delaware statutory trust. The Funds are managed and controlled by Teucrium Trading, LLC (''Sponsor''). The Sponsor is a Delaware limited liability company that is registered as a commodity pool operator (''CPO'') with the Commodity Futures Trading Commission (''CFTC'') and is a member of the National Futures Association.

Teucrium Wheat Fund

According to the Registration Statement, the investment objective of the Fund is to have the daily changes in percentage terms of the Shares' net asset value (''NAV'') reflect the daily changes in percentage terms of a weighted average of the closing settlement prices for three futures contracts for wheat (wheat futures contracts generally referred to herein as ''Wheat Futures Contracts'') that are traded on the Chicago Board of Trade (''CBOT''), specifically: (1) The second-to-expire CBOT Wheat Futures Contract, weighted 35%, (2) the third-to-expire CBOT Wheat Futures Contract, weighted 30%, and (3) the CBOT Wheat Futures Contract expiring in the December following the expiration month of the third-to-expire contract, weighted 35%. (This weighted average of the three referenced Wheat Futures Contracts is referred to herein as the ''Wheat Benchmark,'' and the three Wheat Futures Contracts that at any given time make up the Wheat Benchmark are referred to herein as the ''Wheat Benchmark Component Futures Contracts'').[10]

The Fund seeks to achieve its investment objective by investing under normal market conditions [11] in Wheat Benchmark Component Futures Contracts or, in certain circumstances, in other Wheat Futures Contracts traded on the CBOT, the Kansas City Board of Trade (''KCBT''), or the Minneapolis Grain Exchange (''MGEX''), or Wheat Futures Contracts traded on foreign exchanges. In addition, and to a limited extent, the Fund also may invest in exchange-traded options on Wheat Futures Contracts, and in wheat-based swap agreements that are cleared through the CBOT or its affiliated provider of clearing services (''Cleared Wheat Swaps'') in furtherance of the Fund's investment objective.[12]

Specifically, once position limits in CBOT Wheat Futures Contracts are reached, the Fund's intention is to invest first in Cleared Wheat Swaps to the extent permitted under the position limits applicable to Cleared Wheat Swaps and appropriate in light of the liquidity in the Cleared Wheat Swaps market, and then, using its commercially reasonable judgment, in other Wheat Futures Contracts (*i.e.,* Wheat Futures Contracts traded on KCBT, MGEX or traded on foreign exchanges) or instruments such as cash-settled options on Wheat Futures Contracts and forward contracts, swaps other than Cleared Wheat Swaps, and other over-the-counter transactions that are based on the price of wheat and Wheat Futures Contracts (collectively, ''Other Wheat Interests,'' and together with Wheat Futures Contracts and Cleared Wheat Swaps, ''Wheat Interests''). By utilizing certain or all of these investments, the Sponsor will endeavor to cause the Fund's performance to closely track that of the Wheat Benchmark. The circumstances under which such investments in Other Wheat Interests may be utilized (*e.g.,* imposition of position limits) are discussed below.

Wheat Futures Contracts traded on the CBOT expire on a specified day in five different months: March, May, July, September and December. For example, in terms of the Wheat Benchmark, in June of a given year the next-to-expire or ''spot month'' Wheat Futures Contract will expire in July of that year, and the Wheat Benchmark Component Futures Contracts will be the contracts expiring in September of that year (the second-to-expire contract), December of that year (the third-to-expire contract), and December of the following year. As another example, in November of a given year, the Wheat Benchmark Component Futures Contracts will be the contracts expiring in March, May and December of the following year.

According to the Registration Statement, the Fund seeks to achieve its investment objective primarily by investing in Wheat Interests such that daily changes in the Fund's NAV will be

[4] *See, e.g.,* Securities Exchange Act Release No. 58161 (July 15, 2008), 73 FR 42380 (July 21, 2008) (SR–Amex–2008–39).

[5] *See, e.g.,* Securities Exchange Act Release No. 58163 (July 15, 2008), 73 FR 42391 (July 21, 2008) (SR–NYSEArca–2008–73).

[6] *See, e.g.,* Securities Exchange Act Release No. 58457 (September 3, 2008), 73 FR 52711 (September 10, 2008) (SR–NYSEArca–2008–91).

[7] *See* Securities Exchange Act Release No. 62213 (June 3, 2010), 75 FR 32828 (June 9, 2010) (SR–NYSEArca–2010–22) (order approving listing on the Exchange of Teucrium Corn Fund).

[8] *See, e.g.,* Securities Exchange Act Release Nos. 57456 (March 7, 2008), 73 FR 13599 (March 13, 2008) (SR–NYSEArca–2007–91) (order granting accelerated approval for NYSE Arca listing the iShares GS Commodity Trusts); 59781 (April 17, 2009), 74 FR 18771 (April 24, 2009) (SR–NYSEArca–2009–28) (order granting accelerated approval for NYSE Arca listing the ETFS Silver Trust); 59895 (May 8, 2009), 74 FR 22993 (May 15, 2009) (SR–NYSEArca–2009–40) (order granting accelerated approval for NYSE Arca listing the ETFS Gold Trust); 61219 (December 22, 2009), 74 FR 68886 (December 29, 2009) (SR–NYSEArca–2009–95) (order approving listing on NYSE Arca of the ETFS Platinum Trust).

[9] *See* Amendment No. 3 to Form S–1 for Teucrium Commodity Trust, dated June 3, 2011 (File No. 333–167591) relating to the Teucrium Wheat Fund; Amendment No. 3 to Form S–1 for Teucrium Commodity Trust, dated June 3, 2011 (File No. 333–167590) relating to the Teucrium Soybean Fund; and Amendment No. 3 to Form S–1 for Teucrium Commodity Trust, dated June 3, 2011 (File No. 333–167585) relating to the Teucrium Sugar Fund (each, a ''Registration Statement,'' and, collectively, the ''Registration Statements''). The discussion herein relating to the Trust and the Shares is based, in part, on the Registration Statements.

[10] Wheat futures volume on CBOT for 2010 and 2011 (through April 29, 2011) was 23,058,783 contracts and 8,860,135 contracts, respectively. As of April 29, 2011, open interest for wheat futures was 456,851 contracts. The contract price was $40,062.50 (801.25 cents per bushel and 5,000 bushels per contract). The approximate value of all outstanding contracts was $18.3 billion. The position limits for all months is 6,500 contracts and the total value of contracts if position limits were reached would be approximately $260.4 million (based on the $40,062.50 contract price).

[11] The term ''under normal market conditions'' includes, but is not limited to, the absence of extreme volatility or trading halts in the fixed income markets or the financial markets generally; operational issues causing dissemination of inaccurate market information; or force majeure type events such as systems failure, natural or man-made disaster, act of God, armed conflict, act of terrorism, riot or labor disruption or any similar intervening circumstance.

[12] According to the Registration Statement, a swap agreement is a bilateral contract to exchange a periodic stream of payments determined by reference to a notional amount, with payment typically made between the parties on a net basis. For example, in the case of a wheat swap, the Fund may be obligated to pay a fixed price per bushel of wheat and be entitled to receive an amount per bushel equal to the current value of an index of wheat prices, the price of a specified Wheat Futures Contract, or the average price of a group of Wheat Futures Contracts such as the Wheat Benchmark.

expected to closely track the changes in the Wheat Benchmark. The Fund's positions in Wheat Interests will be changed or ''rolled'' on a regular basis in order to track the changing nature of the Wheat Benchmark. For example, five times a year (on the date on which a Wheat Futures Contract expires), the second-to-expire Wheat Futures Contract will become the next-to-expire Wheat Futures Contract and will no longer be a Wheat Benchmark Component Futures Contract, and the Fund's investments will have to be changed accordingly.[13]

Consistent with achieving the Fund's investment objective of closely tracking the Wheat Benchmark, the Sponsor may for certain reasons cause the Fund to enter into or hold Cleared Wheat Swaps and/or Other Wheat Interests. For example, certain Cleared Wheat Swaps have standardized terms similar to, and are priced by reference to, a corresponding Wheat Benchmark Component Futures Contract. Additionally, Other Wheat Interests that do not have standardized terms and are not exchange-traded (''over-the-counter'' Wheat Interests), can generally be structured as the parties desire. Therefore, the Fund might enter into multiple Cleared Wheat Swaps and/or over-the-counter Wheat Interests intended to exactly replicate the performance of each of the three Wheat Benchmark Component Futures Contracts, or a single over-the-counter Wheat Interest designed to replicate the performance of the Wheat Benchmark as a whole. According to the Registration Statement, assuming that there is no default by a counterparty to an over-the-counter Wheat Interest, the performance of the over-the-counter Wheat Interest will necessarily correlate exactly with the performance of the Wheat Benchmark or the applicable Wheat Benchmark Component Futures Contract.[14] The Fund might also enter into or hold over-the-counter Wheat Interests to facilitate effective trading, consistent with the discussion of the Fund's ''roll'' strategy in the preceding paragraph. In addition, the Fund might enter into or hold over-the-counter Wheat Interests that would be expected to alleviate overall deviation between the Fund's performance and that of the Wheat Benchmark that may result from certain market and trading inefficiencies or other reasons.

The Fund will invest in Wheat Interests to the fullest extent possible without being leveraged or unable to satisfy its expected current or potential margin or collateral obligations with respect to its investments in Wheat Interests.[15] After fulfilling such margin and collateral requirements, the Fund will invest the remainder of its proceeds from the sale of baskets in obligations of the United States government (''Treasury Securities'') or cash equivalents, and/or hold such assets in cash (generally in interest-bearing accounts). Therefore, the focus of the Sponsor in managing the Fund is investing in Wheat Interests and in Treasury Securities, cash and/or cash equivalents. Each of the Funds will earn interest income from the Treasury Securities and/or cash equivalents that it purchases and on the cash it holds through each Fund's custodian, the Bank of New York Mellon (the ''Custodian'' and the ''Administrator'').

The Sponsor endeavors to place the Fund's trades in Wheat Interests and otherwise manage the Fund's investments so that the Fund's average daily tracking error against the Wheat Benchmark will be less than 10 percent over any period of 30 trading days. More specifically, the Sponsor will endeavor to manage the Fund so that A will be within plus/minus 10 percent of B, where A is the average daily change in the Fund's NAV for any period of 30 successive valuation days, *i.e.,* any trading day as of which the Fund calculates its NAV, and B is the average daily change in the Wheat Benchmark over the same period.[16]

According to the Registration Statement, the Sponsor employs a ''neutral'' investment strategy intended to track the changes in the Wheat Benchmark regardless of whether the Wheat Benchmark goes up or goes down. The Fund's ''neutral'' investment strategy is designed to permit investors generally to purchase and sell the Fund's Shares for the purpose of investing indirectly in the wheat market in a cost-effective manner. Such investors may include participants in the wheat industry and other industries seeking to hedge the risk of losses in their wheat-related transactions, as well as investors seeking exposure to the wheat market. The Sponsor does not intend to operate the Fund in a fashion such that its per Share NAV will equal, in dollar terms, the spot price of a bushel or other unit of wheat or the price of any particular Wheat Futures Contract.

According to the Registration Statement, the CFTC and U.S. designated contract markets such as the CBOT may establish position limits on the maximum net long or net short futures contracts in commodity interests that any person or group of persons under common trading control (other than as a hedge) may hold, own or control.[17] For example, the current position limit for investments at any one time in CBOT Wheat Futures Contracts are 600 spot month contracts, 5,000 contracts expiring in any other single month, and 6,500 contracts total for all months. Cleared Wheat Swaps are subject to position limits that are substantially identical to, but measured separately from, the limits on Wheat Futures Contracts. Position limits are fixed ceilings that the Fund would not be able to exceed without specific exchange authorization. Under current law, all Wheat Futures Contracts traded on a particular exchange that are held under the control of the Sponsor, including those held by any future series of the Trust, are aggregated in determining the application of applicable position limits.

In addition to position limits, the exchanges may establish daily price fluctuation limits on futures contracts. The daily price fluctuation limit establishes the maximum amount that

[13] For each of the Funds, in order that the Fund's trading does not cause unwanted market movements and to make it more difficult for third parties to profit by trading based on such expected market movements, the Fund's investments typically will not be rolled entirely on that day, but rather will typically be rolled over a period of several days.

[14] According to the Registration Statements, the Funds face the risk of non-performance by the counterparties to over-the-counter contracts. Unlike in futures contracts, the counterparty to these contracts is generally a single bank or other financial institution, rather than a clearing organization backed by a group of financial institutions. As a result, there will be greater counterparty credit risk in these transactions. The creditworthiness of each potential counterparty will be assessed by the Sponsor. The Sponsor will assess or review, as appropriate, the creditworthiness of each potential or existing counterparty to an over-the-counter contract pursuant to guidelines approved by the Sponsor. The creditworthiness of existing counterparties will be reviewed periodically by the Sponsor.

[15] The Sponsor represents that the Fund will invest in Wheat Interests in a manner consistent with the Fund's investment objective and not to achieve additional leverage.

[16] For each of the Funds, the Sponsor believes that market arbitrage opportunities will cause each Fund's respective Share price on the NYSE Arca to closely track the Fund's NAV per Share. The Sponsor believes that the net effect of this expected relationship and the expected relationship described above between the Fund's respective NAV and the respective benchmark will be that the changes in the price of the Fund's Shares on the NYSE Arca will closely track, in percentage terms, changes in such benchmark, less expenses.

[17] According to the Registration Statement, position limits generally impose a fixed ceiling on aggregate holdings in futures contracts relating to a particular commodity, and may also impose separate ceilings on contracts expiring in any one month, contracts expiring in the spot month, and/or contracts in certain specified final days of trading.

the price of futures contracts may vary either up or down from the previous day's settlement price. Once the daily price fluctuation limit has been reached in a particular futures contract, no trades may be made at a price beyond that limit.[18] Position limits, accountability levels, and daily price fluctuation limits set by the exchanges have the potential to cause tracking error, which could cause the price of Shares to substantially vary from the Wheat Benchmark and prevent an investor from being able to effectively use the Fund as a way to hedge against wheat-related losses or as a way to indirectly invest in wheat.

The Fund does not intend to limit the size of the offering and will attempt to expose substantially all of its proceeds to the wheat market utilizing Wheat Interests. If the Fund encounters position limits, accountability levels, or price fluctuation limits for Wheat Futures Contracts and/or Cleared Wheat Swaps on the CBOT, it may then, if permitted under applicable regulatory requirements, purchase Other Wheat Interests and/or Wheat Futures Contracts listed on other domestic or foreign exchanges. However, the Wheat Futures Contracts available on such foreign exchanges may have different underlying sizes, deliveries, and prices. In addition, the Wheat Futures Contracts available on these exchanges may be subject to their own position limits and accountability levels. In any case, notwithstanding the potential availability of these instruments in certain circumstances, position limits could force the Fund to limit the number of Creation Baskets (as defined below) that it sells.[19]

Teucrium Soybean Fund

According to the Registration Statement, the investment objective of the Fund is to have the daily changes in percentage terms of the Shares' NAV reflect the daily changes in percentage terms of a weighted average of the closing settlement prices for three futures contracts for soybeans (soybean futures contracts generally referred to herein as ''Soybean Futures Contracts'') that are traded on the CBOT. Except as described in the following paragraph, the three Soybean Futures Contracts will be: (1) Second-to-expire CBOT Soybean Futures Contract, weighted 35%, (2) the third-to-expire CBOT Soybean Futures Contract, weighted 30%, and (3) the CBOT Soybean Futures Contract expiring in the November following the expiration month of the third-to-expire contract, weighted 35%. The weighted average of the three Soybean Futures Contracts is referred to herein as the ''Soybean Benchmark,'' and the three Soybean Futures Contracts that at any given time make up the Soybean Benchmark are referred to herein as the ''Soybean Benchmark Component Futures Contracts.'' The circumstances under which such investments in Other Soybean Interests may be utilized (*e.g.,* imposition of position limits) are discussed below.[20]

Soybean Futures Contracts traded on the CBOT expire on a specified day in seven different months: January, March, May, July, August, September and November. However, there is generally a less liquid market for the Soybean Futures Contracts expiring in August (the ''August Contract'') and September (the ''September Contract'' and, together with the August Contract, the ''Excluded Contracts''), and the Sponsor has determined not to incorporate the Excluded Contracts into the Soybean Benchmark calculation. Accordingly, during the period when the Excluded Contracts are the second-to-expire and third-to-expire Soybean Futures Contract, the fourth-to-expire and fifth-to-expire Soybean Futures Contracts will take the place of the second-to-expire and third-to-expire Soybean Futures Contracts, respectively, as Soybean Benchmark Component Futures Contracts. Similarly, when the August Contract is the third-to-expire Soybean Futures Contract, the fifth-to-expire Soybean Futures Contract will take the place of the August Contract as a Soybean Benchmark Component Futures Contract, and when the September Contract is the second-to-expire Soybean Futures Contract, the third-to-expire and fourth-to-expire Soybean Futures Contracts will be Soybean Benchmark Component Futures Contracts.[21]

According to the Registration Statement, the Fund seeks to achieve its investment objective by investing under normal market conditions in Soybean Benchmark Component Futures Contracts or, in certain circumstances, in other Soybean Futures Contracts traded on CBOT or Soybean Futures Contracts traded on foreign exchanges. In addition, and to a limited extent, the Fund also may invest in exchange-traded options on Soybean Futures Contracts and in soybean-based swap agreements that are cleared through the CBOT or its affiliated provider of clearing services (''Cleared Soybean Swaps'') in furtherance of the Fund's investment objective.

Specifically, once CBOT position limits in Soybean Futures Contracts are reached, the Fund's intention is to invest first in Cleared Soybean Swaps to the extent permitted under the CBOT position limits applicable to Cleared Soybean Swaps and appropriate in light of the liquidity in the Cleared Soybean Swaps market, and then, using its commercially reasonable judgment, in other Soybean Futures Contracts (*i.e.,* Soybean Futures Contracts traded on foreign exchanges) and instruments such as cash-settled options on Soybean Futures Contracts and forward contracts, swaps other than Cleared Soybean Swaps, and other over-the-counter transactions that are based on the price of soybeans and Soybean Futures Contracts (collectively, ''Other Soybean Interests,'' and together with Soybean Futures Contracts and Cleared Soybean Swaps, ''Soybean Interests'').

The Fund seeks to achieve its investment objective primarily by investing in Soybean Interests such that daily changes in the Fund's NAV will be expected to closely track the changes in the Soybean Benchmark. The Fund's positions in Soybean Interests will be changed or ''rolled'' on a regular basis in order to track the changing nature of the Soybean Benchmark. For example, five times a year (on the date on which certain Soybean Futures Contracts expire), a particular Soybean Futures Contract will no longer be a Soybean Benchmark Component Futures Contract, and the Fund's investments will have to be changed accordingly.

[18] For example, the CBOT imposes a $3,000 per contract price fluctuation limit for Wheat Futures Contracts. This limit is initially based off of the previous trading day's settlement price. If two or more Wheat Futures Contract months within the first five listed non-spot contracts close at the limit, the daily price limit increases to $4,500 per contract for the next business day and to $6,750 for the next business day.

[19] With respect to each of the Funds, there will be no specified limit on the maximum amount of Creation Baskets that can be sold. At some point, however, applicable position limits may practically limit the number of Creation Baskets that will be sold if the Sponsor determines that the other investment alternatives available to a Fund at that time will not enable it to meet its stated investment objective.

[20] Soybean futures volume on CBOT for 2010 and 2011 (through April 29, 2011) was 36,962,868 contracts and 16,197,385 contracts, respectively. As of April 29, 2011, open interest for soybean futures was 572,959 contracts. The contract price was $69,700.00 (1394 cents per bushel and 5,000 bushels per contract). The approximate value of all outstanding contracts was $39.9 billion. The position limits for all months is 6,500 contracts and the total value of contracts if position limits were reached would be approximately $453 million (based on the $69,700.00 contract price).

[21] *See* the Registration Statement for additional information regarding specific Soybean Futures Contracts that will be used in the calculation of the Soybean Benchmark at any point in a given year, based on the same 35%/30%/35% weighting methodology described above.

According to the Registration Statement, consistent with achieving the Fund's investment objective of closely tracking the Soybean Benchmark, the Sponsor may for certain reasons cause the Fund to enter into or hold Cleared Soybean Swaps and/or Other Soybean Interests. For example, certain Cleared Soybean Swaps have standardized terms similar to, and are priced by reference to, a corresponding Soybean Benchmark Component Futures Contract. Additionally, Other Soybean Interests that do not have standardized terms and are not exchange-traded (''over-the-counter'' Soybean Interests) can generally be structured as the parties desire. Therefore, the Fund might enter into multiple Cleared Soybean Swaps and/or over-the-counter Soybean Interests intended to exactly replicate the performance of each of the three Soybean Benchmark Component Futures Contracts, or a single over-the-counter Soybean Interest designed to replicate the performance of the Soybean Benchmark as a whole. According to the Registration Statement, assuming that there is no default by a counterparty to an over-the-counter Soybean Interest, the performance of the over-the-counter Soybean Interest will necessarily correlate exactly with the performance of the Soybean Benchmark or the applicable Soybean Benchmark Component Futures Contract. The Fund might also enter into or hold over-the-counter Soybean Interests to facilitate effective trading, consistent with the discussion of the Fund's ''roll'' strategy in the preceding paragraph. In addition, the Fund might enter into or hold over-the-counter Soybean Interests that would be expected to alleviate overall deviation between the Fund's performance and that of the Soybean Benchmark that may result from certain market and trading inefficiencies or other reasons.

The Fund will invest in Soybean Interests to the fullest extent possible without being leveraged or unable to satisfy its expected current or potential margin or collateral obligations with respect to its investments in Soybean Interests.[22] After fulfilling such margin and collateral requirements, the Fund will invest the remainder of its proceeds from the sale of baskets in Treasury Securities or cash equivalents, and/or hold such assets in cash (generally in interest-bearing accounts). Therefore, the focus of the Sponsor in managing the Fund is investing in Soybean Interests and in Treasury Securities, cash and/or cash equivalents.

The Sponsor endeavors to place the Fund's trades in Soybean Interests and otherwise manage the Fund's investments so that the Fund's average daily tracking error against the Soybean Benchmark will be less than 10 percent over any period of 30 trading days. More specifically, the Sponsor will endeavor to manage the Fund so that A will be within plus/minus 10 percent of B, where A is the average daily change in the Fund's NAV for any period of 30 successive valuation days, *i.e.,* any trading day as of which the Fund calculates its NAV, and B is the average daily change in the Soybean Benchmark over the same period.

The Sponsor employs a ''neutral'' investment strategy intended to track the changes in the Soybean Benchmark regardless of whether the Soybean Benchmark goes up or goes down. The Fund's ''neutral'' investment strategy is designed to permit investors generally to purchase and sell the Fund's Shares for the purpose of investing indirectly in the soybean market in a cost-effective manner. Such investors may include participants in the soybean industry and other industries seeking to hedge the risk of losses in their soybean-related transactions, as well as investors seeking exposure to the soybean market. The Sponsor does not intend to operate the Fund in a fashion such that its per Share NAV will equal, in dollar terms, the spot price of a bushel or other unit of soybean or the price of any particular Soybean Futures Contract.

The CFTC's position limits for Soybean Futures Contracts (including related options) are 600 spot month contracts, 6,500 contracts expiring in any other single month, and 10,000 contracts for all months. Position limits could in certain circumstances effectively limit the number of Creation Baskets that the Fund can sell but, because the Fund is new, it is not expected to reach asset levels that would cause these position limits to be implicated in the near future. Cleared Soybean Swaps are subject to position limits that are substantially identical to, but measured separately from, the positions limits applicable to Soybean Futures Contracts. Under current law, all Soybean Futures Contracts that are held under the control of the Sponsor, including those held by any future series of the Trust, are aggregated in determining the application of applicable position limits.

According to the Registration Statement, in contrast to position limits, accountability levels are not fixed ceilings, but rather thresholds above which an exchange may exercise greater scrutiny and control over an investor, including by imposing position limits on the investor. In light of the position limits discussed above, the CBOT has not set any accountability levels for Soybean Futures Contracts.

According to the Registration Statement, the CBOT imposes a $0.70 per bushel ($3,500 per contract) daily price fluctuation limit for Soybean Futures Contracts. Once the daily price fluctuation limit has been reached in a particular Soybean Futures Contract, no trades may be made at a price beyond that limit. If two or more Soybean Futures Contract months within the first seven listed non-spot contracts close at the limit, the daily price limit increases to $1.05 per bushel ($5,250 per contract) the next business day and to $1.60 per bushel ($8,000 per contract) the next business day. These limits are based off the previous trading day's settlement price. Position limits and daily price fluctuation limits set by the CFTC and the exchanges have the potential to cause tracking error, which could cause the price of Shares to substantially vary from the Soybean Benchmark and prevent an investor from being able to effectively use the Fund as a way to hedge against soybean-related losses or as a way to indirectly invest in soybeans.

The Fund does not intend to limit the size of the offering and will attempt to expose substantially all of its proceeds to the soybean market utilizing Soybean Interests. If the Fund encounters position limits or price fluctuation limits for Soybean Futures Contracts and/or Cleared Soybean Swaps on the CBOT, it may then, if permitted under applicable regulatory requirements, purchase Other Soybean Interests and/or Soybean Futures Contracts listed on foreign exchanges. However, the Soybean Futures Contracts available on such foreign exchanges may have different underlying sizes, deliveries, and prices. In addition, the Soybean Futures Contracts available on these exchanges may be subject to their own position limits or similar restrictions. In any case, notwithstanding the potential availability of these instruments in certain circumstances, position limits could force the Fund to limit the number of Creation Baskets (as defined below) that it sells.[23]

Teucrium Sugar Fund

According to the Registration Statement, the investment objective of the Fund is to have the daily changes in percentage terms of the Shares' NAV

[22] The Sponsor represents that the Fund will invest in Soybean Interests in a manner consistent with the Fund's investment objective and not to achieve additional leverage.

[23] *See* note 19, *supra.*

reflect the daily changes in percentage terms of a weighted average of the closing settlement prices for three futures contracts for sugar (sugar futures contracts generally referred to herein as ''Sugar Futures Contracts'') that are traded on ICE Futures US (''ICE Futures''), specifically: (1) The second-to-expire Sugar No. 11 Futures Contract (a ''Sugar No. 11 Futures Contract''), weighted 35%, (2) the third-to-expire Sugar No. 11 Futures Contract, weighted 30%, and (3) the Sugar No. 11 Futures Contract expiring in the March following the expiration month of the third-to-expire contract, weighted 35%. The weighted average of the three Sugar No. 11 Futures Contracts is referred to herein as the ''Sugar Benchmark,'' and the three Sugar No. 11 Futures Contracts that at any given time make up the Sugar Benchmark are referred to herein as the ''Sugar Benchmark Component Futures Contracts.'' [24]

The Fund seeks to achieve its investment objective by investing under normal market conditions in Sugar Benchmark Component Futures Contracts or, in certain circumstances, in other Sugar Futures Contracts traded on ICE Futures or the New York Mercantile Exchange (''NYMEX''), or Sugar Futures Contracts traded on foreign exchanges. In addition, and to a limited extent, the Fund also may invest in exchange-traded options on Sugar Futures Contracts and in sugar-based swap agreements that are cleared through ICE Futures or its affiliated provider of clearing services (''Cleared Sugar Swaps'') in furtherance of the Fund's investment objective.

Specifically, once accountability levels in Sugar No. 11 Futures Contracts traded on ICE Futures are reached, the Fund's intention is to invest first in Cleared Sugar Swaps to the extent permitted under the accountability levels applicable to Cleared Sugar Swaps and appropriate in light of the liquidity in the Cleared Sugar Swaps market, and then, using its commercially reasonable judgment, in other Sugar Futures Contracts (*i.e.,* Sugar Futures Contracts traded on the NYMEX or foreign exchanges) and instruments such as cash-settled options on Sugar Futures Contracts and forward contracts, swaps other than Cleared Sugar Swaps, and other over-the-counter transactions that are based on the price of sugar and Sugar Futures Contracts (collectively, ''Other Sugar Interests,'' and together with Sugar Futures Contracts and Cleared Sugar Swaps, ''Sugar Interests'').

Sugar No. 11 Futures Contracts traded on the ICE Futures expire on a specified day in four different months: March, May, July, and October. For example, in terms of the Sugar Benchmark, in June of a given year (''year 1'') the next-to-expire or ''spot month'' Sugar No. 11 Futures Contract will expire in July of year 1, and the Sugar Benchmark Component Futures Contracts will be the contracts expiring in October of year 1 (the second-to-expire contract), March of year 2 (the third-to-expire contract), and March of year 3. As another example, in November of year 1 the Sugar Benchmark Component Futures Contracts will be the contracts expiring in May of year 2, July of year 2, and March of year 3.

The Fund seeks to achieve its investment objective primarily by investing in Sugar Interests such that daily changes in the Fund's NAV will be expected to closely track the changes in the Sugar Benchmark. The Fund's positions in Sugar Interests will be changed or ''rolled'' on a regular basis in order to track the changing nature of the Sugar Benchmark. For example, four times a year (on the date on which a Sugar No. 11 Futures Contract expires), a particular Sugar No. 11 Futures Contract will no longer be a Sugar Benchmark Component Futures Contract, and the Fund's investments will have to be changed accordingly.

Consistent with achieving the Fund's investment objective of closely tracking the Sugar Benchmark, the Sponsor may for certain reasons cause the Fund to enter into or hold Cleared Sugar Swaps and/or Other Sugar Interests. For example, certain Cleared Sugar Swaps have standardized terms similar to, and are priced by reference to, a corresponding Sugar Benchmark Component Futures Contract. Additionally, Other Sugar Interests that do not have standardized terms and are not exchange-traded, referred to as ''over-the-counter'' Sugar Interests, can generally be structured as the parties desire. Therefore, the Fund might enter into multiple Cleared Sugar Swaps and/or over-the-counter Sugar Interests intended to exactly replicate the performance of each of the three Sugar Benchmark Component Futures Contracts, or a single over-the-counter Sugar Interest designed to replicate the performance of the Sugar Benchmark as a whole. According to the Registration Statement, assuming that there is no default by a counterparty to an over-the-counter Sugar Interest, the performance of the over-the-counter Sugar Interest will necessarily correlate exactly with the performance of the Sugar Benchmark or the applicable Sugar Benchmark Component Futures Contract. The Fund might also enter into or hold over-the-counter Sugar Interests other than Sugar Benchmark Component Futures Contracts to facilitate effective trading, consistent with the discussion of the Fund's ''roll'' strategy in the preceding paragraph. In addition, the Fund might enter into or hold over-the-counter Sugar Interests that would be expected to alleviate overall deviation between the Fund's performance and that of the Sugar Benchmark that may result from certain market and trading inefficiencies or other reasons.

The Fund will invest in Sugar Interests to the fullest extent possible without being leveraged or unable to satisfy its expected current or potential margin or collateral obligations with respect to its investments in Sugar Interests.[25] After fulfilling such margin and collateral requirements, the Fund will invest the remainder of its proceeds from the sale of baskets in Treasury Securities or cash equivalents, and/or hold such assets in cash (generally in interest-bearing accounts). Therefore, the focus of the Sponsor in managing the Fund is investing in Sugar Interests and in Treasury Securities, cash and/or cash equivalents.

The Sponsor endeavors to place the Fund's trades in Sugar Interests and otherwise manage the Fund's investments so that the Fund's average daily tracking error against the Sugar Benchmark will be less than 10 percent over any period of 30 trading days. More specifically, the Sponsor will endeavor to manage the Fund so that A will be within plus/minus 10 percent of B, where A is the average daily change in the Fund's NAV for any period of 30 successive valuation days, *i.e.,* any trading day as of which the Fund calculates its NAV, and B is the average daily change in the Sugar Benchmark over the same period.

The Sponsor employs a ''neutral'' investment strategy intended to track the changes in the Sugar Benchmark regardless of whether the Sugar Benchmark goes up or goes down. The Fund's ''neutral'' investment strategy is

[24] Sugar futures volume on ICE Futures for 2010 and 2011 (through April 29, 2011) was 27,848,391 contracts and 9,045,069 contracts, respectively. As of April 29, 2011, open interest for sugar futures was 570,948 contracts. The contract price was $24,920.00 (22.25 cents per pound and 112,000 pounds per contract). The approximate value of all outstanding contracts was $14.2 billion. The position limits for all months is 15,000 contracts and the total value of contracts if position limits were reached would be approximately $373.8 million (based on the $24,920.00 contract price).

[25] The Sponsor represents that the Fund will invest in Sugar Interests in a manner consistent with the Fund's investment objective and not to achieve additional leverage.

designed to permit investors generally to purchase and sell the Fund's Shares for the purpose of investing indirectly in the sugar market in a cost-effective manner. Such investors may include participants in the sugar industry and other industries seeking to hedge the risk of losses in their sugar-related transactions, as well as investors seeking exposure to the sugar market. The Sponsor does not intend to operate the Fund in a fashion such that its per Share NAV will equal, in dollar terms, the spot price of a pound or other unit of sugar or the price of any particular Sugar Futures Contract.

U.S. designated contract markets such as the ICE Futures and the NYMEX have established accountability levels on the maximum net long or net short Sugar Futures Contracts that any person or group of persons under common trading control may hold, own or control. For example, the current ICE Futures-established accountability level for investments in Sugar No. 11 Futures Contracts for any one month is 10,000, and the accountability level for all combined months is 15,000. While accountability levels are not fixed ceilings, they are thresholds above which the exchange may exercise greater scrutiny and control over an investor, including limiting an investor to holding no more Sugar No. 11 Futures Contracts than the amount established by the accountability level. Cleared Sugar Swaps are subject to an ICE Futures accountability level of 10,000 swap positions for all months combined. This limit is measured separately from the accountability levels on Sugar No. 11 Futures Contracts. Under current law, all Sugar Futures Contracts traded on a particular exchange that are held under the control of the Sponsor, including those held by any future series of the Trust, are aggregated in determining the application of applicable accountability levels. The Fund does not intend to invest in Sugar Futures Contracts or Cleared Sugar Swaps in excess of any applicable accountability levels.

According to the Registration Statement, the CFTC has not currently set position limits for Sugar Futures Contracts, and ICE Futures and NYMEX have established such position limits only on spot month Sugar No. 11 Futures Contracts. Cleared Sugar Swaps are subject to ICE Futures position limits that are substantially identical to, but measured separately from, the limits on Sugar No. 11 Futures Contracts. However, because the Fund does not expect to hold spot month contracts at any time when these position limits would be applicable, it is unlikely that these limits will come into play. Currently, the ICE Futures and the NYMEX have not imposed maximum daily price fluctuation limits on Sugar Futures Contracts. Accountability levels, position limits and daily price fluctuation limits set by the CFTC and the exchanges have the potential to cause tracking error, which could cause the price of Shares to substantially vary from the Sugar Benchmark and prevent an investor from being able to effectively use the Fund as a way to hedge against sugar-related losses or as a way to indirectly invest in sugar.

The Fund does not intend to limit the size of the offering and will attempt to expose substantially all of its proceeds to the sugar market utilizing Sugar Interests. If the Fund encounters accountability levels, position limits, or price fluctuation limits for Sugar Futures Contracts and/or Cleared Sugar Swaps on ICE Futures, it may then, if permitted under applicable regulatory requirements, purchase Other Sugar Interests and/or Sugar Futures Contracts listed on the NYMEX or foreign exchanges. However, the Sugar Futures Contracts available on such foreign exchanges may have different underlying sizes, deliveries, and prices. In addition, the Sugar Futures Contracts available on these exchanges may be subject to their own position limits and accountability levels. In any case, notwithstanding the potential availability of these instruments in certain circumstances, position limits could force the Fund to limit the number of Creation Baskets that it sells.[26]

Creation and Redemption of Shares

The Funds create and redeem Shares only in blocks called ''Creation Baskets'' and ''Redemption Baskets,'' respectively, each consisting of 50,000 Shares. Only Authorized Purchasers may purchase or redeem Creation Baskets or Redemption Baskets. An Authorized Purchaser is under no obligation to create or redeem baskets, and an Authorized Purchaser is under no obligation to offer to the public Shares of any baskets it does create. Baskets are generally created when there is a demand for Shares, including, but not limited to, when the market price per Share is at (or perceived to be at) a premium to the NAV per Share. Similarly, baskets are generally redeemed when the market price per Share is at (or perceived to be at) a discount to the NAV per Share. Retail investors seeking to purchase or sell Shares on any day are expected to effect such transactions in the secondary market, on the NYSE Arca, at the market price per Share, rather than in connection with the creation or redemption of baskets.

The total deposit required to create each basket (''Creation Basket Deposit'') is the amount of Treasury Securities and/or cash that is in the same proportion to the total assets of each Fund (net of estimated accrued but unpaid fees, expenses and other liabilities) on the purchase order date as the number of Shares to be created under the purchase order is in proportion to the total number of Shares outstanding on the purchase order date. The redemption distribution from each Fund will consist of a transfer to the redeeming Authorized Purchaser of an amount of Treasury Securities and/or cash that is in the same proportion to the total assets of such Fund (net of estimated accrued but unpaid fees, expenses and other liabilities) on the date the order to redeem is properly received as the number of Shares to be redeemed under the redemption order is in proportion to the total number of Shares outstanding on the date the order is received.

The Funds will meet the initial and continued listing requirements applicable to TIRs in NYSE Arca Equities Rule 8.200 and Commentary .02 thereto. With respect to application of Rule 10A–3 [27] under the Act, the Trust relies on the exception contained in Rule 10A–3(c)(7).[28] A minimum of 100,000 Shares for each Fund will be outstanding as of the start of trading on the Exchange.

A more detailed description of Wheat Interests, Soybean Interests and Sugar Interests and other aspects of the applicable commodities markets, as well as investment risks, are set forth in the Registration Statements. All terms relating to the Funds that are referred to, but not defined in, this proposed rule change are defined in the Registration Statements.

Availability of Information Regarding the Shares

The Web site for the Funds (*http://www.teucriumwheatfund.com, http://www.teucriumsoybeanfund.com* and *http://www.teucriumsugarfund.com,* respectively) and/or the Exchange, which are publicly accessible at no charge, will contain the following information: (a) The current NAV per Share daily and the prior business day's NAV and the reported closing price; (b) the midpoint of the bid-ask price in

[26] *See* note 19, *supra.*

[27] 17 CFR 240.10A–3.

[28] 17 CFR 240.10A–3(c)(7).

relation to the NAV as of the time the NAV is calculated (the ''Bid-Ask Price''); (c) calculation of the premium or discount of such price against such NAV; (d) the bid-ask price of Shares determined using the highest bid and lowest offer as of the time of calculation of the NAV; (e) data in chart form displaying the frequency distribution of discounts and premiums of the Bid-Ask Price against the NAV, within appropriate ranges for each of the four (4) previous calendar quarters; (f) the prospectus; and (g) other applicable quantitative information. The Funds will also disseminate the Funds' holdings on a daily basis on the Funds' respective Web sites.

The NAV for the Funds will be calculated by the Administrator once a day and will be disseminated daily to all market participants at the same time.[29] The Exchange also will disseminate on a daily basis via the Consolidated Tape Association (''CTA'') information with respect to recent NAV, and Shares outstanding. The Exchange will also make available on its Web site daily trading volume of each of the Shares, closing prices of such Shares, and the corresponding NAV. The closing price and settlement prices of the Wheat Futures Contracts and Soybean Futures Contracts are also readily available from the CBOT, and of the Sugar No. 11 Futures Contracts from ICE Futures. In addition, such prices are available from automated quotation systems, published or other public sources, or on-line information services such as Bloomberg or Reuters. Each benchmark will be disseminated by one or more major market data vendors every 15 seconds during the NYSE Arca Core Trading Session of 9:30 a.m. to 4:00 p.m. E.T. Quotation and last-sale information regarding the Shares will be disseminated through the facilities of the CTA. In addition, the Exchange will provide a hyperlink on its Web site at *http://www.nyx.com* to the Funds' Web sites, which will display all intraday and closing benchmark levels, the intraday Indicative Trust Value (see below), and NAV.

The daily settlement prices for the Wheat Futures Contracts and Soybeans Futures Contracts are publicly available on the Web site of the CBOT (*http://www.cmegroup.com*) and, for the Sugar No. 11 Futures Contracts, on the Web site of ICE Futures (*http://www.theice.com*). In addition, various data vendors and news publications publish futures prices and data. The Exchange represents that quotation and last sale information for the Wheat Futures Contracts, Soybean Futures Contracts and Sugar No. 11 Futures Contracts are widely disseminated through a variety of major market data vendors worldwide, including Bloomberg and Reuters. In addition, the Exchange further represents that complete real-time data for such contracts is available by subscription from Reuters and Bloomberg. The CBOT and ICE Futures also provide delayed futures information on current and past trading sessions and market news free of charge on their Web sites. The specific contract specifications for such contracts are also available at the CBOT and ICE Futures Web sites, as well as other financial informational sources. The spot price of wheat, soybeans and sugar also is available on a 24-hour basis from major market data vendors.

Each Fund will provide Web site disclosure of portfolio holdings daily and will include, as applicable, the names, quantity, price and market value of Wheat, Soybean and Sugar Benchmark Component Futures Contracts, as applicable, and other financial instruments, if any, and the characteristics of such instruments and cash equivalents, and amount of cash held in the portfolios of the Funds. This Web site disclosure of the portfolio composition of the Funds will occur at the same time as the disclosure by the Sponsor of the portfolio composition to Authorized Purchasers so that all market participants are provided portfolio composition information at the same time. Therefore, the same portfolio information will be provided on the public Web sites as well as in electronic files provided to Authorized Purchasers. Accordingly, each investor will have access to the current portfolio composition of the Funds through the Funds' Web sites.

Dissemination of Indicative Trust Value

In addition, in order to provide updated information relating to the Funds for use by investors and market professionals, an updated Indicative Trust Value (''ITV'') will be calculated. The ITV is calculated by using the prior day's closing NAV per Share of each Fund as a base and updating that value throughout the trading day to reflect changes in the value of the Wheat, Soybean and Sugar Benchmark Component Futures Contracts, as applicable, and other financial instruments, if any. As stated in the Registration Statements, changes in the value of Treasury Securities and cash equivalents will not be included in the calculation of the ITV. The ITV disseminated during NYSE Arca trading hours should not be viewed as an actual real time update of the NAV, which is calculated only once a day.

The ITV will be disseminated on a per Share basis by one or more major market data vendors every 15 seconds during the NYSE Arca Core Trading Session. The normal trading hours for Wheat Futures Contracts on the CBOT are 10:30 a.m. E.T. to 2:15 p.m. E.T. The normal trading hours for Soybean Futures Contracts on the CBOT are 10:30 a.m. E.T. to 2:15 p.m. E.T. Thus, there is a gap in time at the end of each day during which the Funds' Shares are traded on the NYSE Arca, but real-time CBOT trading prices for Wheat Futures Contracts and Soybean Futures Contracts traded on CBOT are not available. As a result, during those gaps there will be no update to the ITV. Therefore, a static ITV will be disseminated, between the close of trading on CBOT of Wheat Futures Contracts and Soybean Futures Contracts and the close of the NYSE Arca Core Trading Session.

The normal trading hours for Sugar No. 11 Futures Contracts on ICE Futures are 3:30 a.m. E.T. to 2:00 p.m. E.T. Thus, there is a gap in time at the end of each day during which the Teucrium Sugar Fund's Shares are traded on NYSE Arca, but real-time ICE Futures trading prices for Sugar Futures Contracts traded on ICE Futures are not available. As a result, during those gaps there will be no update to the ITV. Therefore, a static ITV will be disseminated, between the close of trading on ICE Futures of Sugar No. 11 Futures Contracts and the close of the NYSE Arca Core Trading Session. The value of Shares of each Fund may be influenced by non-concurrent trading hours between NYSE Arca and the CBOT and ICE Futures, as applicable, when such Shares are traded on NYSE Arca after normal trading hours of the applicable futures contracts on CBOT or ICE Futures.

The Exchange believes that dissemination of the ITV provides additional information regarding each Fund that is not otherwise available to the public and is useful to professionals and investors in connection with the related Shares trading on the Exchange or the creation or redemption of such Shares.

Trading Rules

The Exchange deems the Shares to be equity securities, thus rendering trading in the Shares subject to the Exchange's

[29] For each Fund, the NAV will be calculated by taking the current market value of the Fund's total assets and subtracting any liabilities. Under the Funds' current operational procedures, the Administrator will generally calculate the NAV of the Funds' Shares as of 4:00 p.m. Eastern Time (''E.T.''). The NAV for a particular trading day will be released after 4:15 p.m. E.T.

existing rules governing the trading of equity securities. Shares will trade on the NYSE Arca Marketplace from 4:00 a.m. to 8:00 p.m. E.T. The Exchange has appropriate rules to facilitate transactions in the Shares during all trading sessions. As provided in NYSE Arca Equities Rule 7.6, Commentary .03, the minimum price variation (''MPV'') for quoting and entry of orders in equity securities traded on the NYSE Arca Marketplace is $0.01, with the exception of securities that are priced less than $1.00 for which the MPV for order entry is $0.0001.

The trading of the Shares will be subject to NYSE Arca Equities Rule 8.200, Commentary .02(e), which sets forth certain restrictions on ETP Holders acting as registered Market Makers in TIRs to facilitate surveillance. See ''Surveillance'' below for more information.

With respect to trading halts, the Exchange may consider all relevant factors in exercising its discretion to halt or suspend trading in the Shares. Trading may be halted because of market conditions or for reasons that, in the view of the Exchange, make trading in the Shares inadvisable. These may include: (1) The extent to which trading is not occurring in the underlying futures contracts, or (2) whether other unusual conditions or circumstances detrimental to the maintenance of a fair and orderly market are present. In addition, trading in Shares will be subject to trading halts caused by extraordinary market volatility pursuant to the Exchange's ''circuit breaker'' rule [30] or by the halt or suspension of trading of the underlying futures contracts.

The Exchange represents that the Exchange may halt trading during the day in which an interruption to the dissemination of the ITV or the value of the underlying futures contracts or the applicable benchmark occurs. If the interruption to the dissemination of the ITV, the value of the underlying futures contracts or the applicable benchmark persists past the trading day in which it occurred, the Exchange will halt trading no later than the beginning of the trading day following the interruption. In addition, if the Exchange becomes aware that the NAV with respect to the Shares is not disseminated to all market participants at the same time, it will halt trading in the Shares until such time as the NAV is available to all market participants.

[30] *See* NYSE Arca Equities Rule 7.12.

Surveillance

The Exchange intends to utilize its existing surveillance procedures applicable to derivative products, including TIRs, to monitor trading in the Shares. The Exchange represents that these procedures are adequate to properly monitor Exchange trading of the Shares in all trading sessions and to deter and detect violations of Exchange rules and applicable federal securities laws.

The Exchange's current trading surveillances focus on detecting securities trading outside their normal patterns. When such situations are detected, surveillance analysis follows and investigations are opened, where appropriate, to review the behavior of all relevant parties for all relevant trading violations. The Exchange is able to obtain information regarding trading in the Shares, the physical commodities included in, or options, futures or options on futures on, Shares through ETP Holders, in connection with such ETP Holders' proprietary or customer trades through ETP Holders which they effect on any relevant market. The Exchange can obtain market surveillance information, including customer identity information, with respect to transactions occurring on exchanges that are members of the Intermarket Surveillance Group (''ISG'') or with which the Exchange has in place a comprehensive surveillance sharing agreement. With respect to the Teucrium Wheat Fund, the Exchange can obtain market surveillance information from CBOT, KCBT and MGEX in that CBOT is a member of ISG and the Exchange has in place a comprehensive surveillance sharing agreement with KCBT and MGEX. Likewise, with respect to the Teucrium Soybean Fund, the Exchange can obtain market surveillance information from CBOT as a member of ISG. With respect to the Teucrium Sugar Fund, the Exchange can obtain market surveillance information from NYMEX and ICE Futures in that both such exchanges are ISG members. A list of ISG members is available at *http://www.isgportal.org.*[31]

In addition, with respect to the Funds' futures contracts traded on exchanges, not more than 10% of the weight of such futures contracts in the aggregate shall consist of components whose principal trading market is not a member of ISG or is a market with which the Exchange does not have a comprehensive surveillance sharing agreement.

The Exchange also has a general policy prohibiting the distribution of material, non-public information by its employees.

[31] The Exchange notes that not all Wheat Interests, Soybean Interests and Sugar Interests may trade on markets that are members of ISG or with which the Exchange has in place a comprehensive surveillance sharing agreement.

Information Bulletin

Prior to the commencement of trading, the Exchange will inform its ETP Holders in an Information Bulletin of the special characteristics and risks associated with trading the Shares. Specifically, the Information Bulletin will discuss the following: (1) The risks involved in trading the Shares during the Opening and Late Trading Sessions when an updated ITV will not be calculated or publicly disseminated; (2) the procedures for purchases and redemptions of Shares in Creation Baskets and Redemption Baskets (and that Shares are not individually redeemable); (3) NYSE Arca Equities Rule 9.2(a), which imposes a duty of due diligence on its ETP Holders to learn the essential facts relating to every customer prior to trading the Shares; (4) how information regarding the ITV is disseminated; (5) that a static ITV will be disseminated, between the close of trading on the applicable futures exchange and the close of the NYSE Arca Core Trading Session; (6) the requirement that ETP Holders deliver a prospectus to investors purchasing newly issued Shares prior to or concurrently with the confirmation of a transaction; and (7) trading information.

In addition, the Information Bulletin will advise ETP Holders, prior to the commencement of trading, of the prospectus delivery requirements applicable to the Funds. The Exchange notes that investors purchasing Shares directly from each Fund will receive a prospectus. ETP Holders purchasing Shares from each Fund for resale to investors will deliver a prospectus to such investors. The Information Bulletin will also discuss any exemptive, no-action and interpretive relief granted by the Commission from any rules under the Act.

In addition, the Information Bulletin will reference that the Funds are subject to various fees and expenses described in the Registration Statements. The Information Bulletin will also reference that the CFTC has regulatory jurisdiction over the trading of wheat, soybean and sugar futures contracts traded on U.S. markets.

The Information Bulletin will also disclose the trading hours of the Shares of each Fund and that the NAV for the Shares is calculated after 4:00 p.m. E.T. each trading day. The Bulletin will

disclose that information about the Shares of each Fund is publicly available on the Funds' Web sites.

2. Statutory Basis

The basis under the Act for this proposed rule change is the requirement under Section 6(b)(5) [32] that an exchange have rules that are designed to prevent fraudulent and manipulative acts and practices, to promote just and equitable principles of trade, to remove impediments to, and perfect the mechanism of a free and open market and, in general, to protect investors and the public interest.

The Exchange believes that the proposed rule change is designed to prevent fraudulent and manipulative acts and practices in that the Shares will be listed and traded on the Exchange pursuant to the initial and continued listing criteria in NYSE Arca Equities Rule 8.200 and Commentary .02 thereto. The Exchange has in place surveillance procedures that are adequate to properly monitor trading in the Shares in all trading sessions and to deter and detect violations of Exchange rules and applicable federal securities laws. The Wheat, Soybean and Sugar Benchmark Component Futures Contracts are traded on futures exchanges that are members of ISG or with which the Exchange has in place a comprehensive surveillance sharing agreement. With respect to the Funds' futures contracts traded on exchanges, not more than 10% of the weight of such futures contracts in the aggregate shall consist of components whose principal trading market is not a member of ISG or is a market with which the Exchange does not have a comprehensive surveillance sharing agreement. The closing price and settlement prices of the Wheat Futures Contracts and Soybean Futures Contracts are readily available from the CBOT, and of the Sugar No. 11 Futures Contracts from ICE Futures. In addition, such prices are available from automated quotation systems, published or other public sources, or on-line information services. Each benchmark will be disseminated by one or more major market data vendors every 15 seconds during the NYSE Arca Core Trading Session of 9:30 a.m. to 4:00 p.m. E.T. Quotation and last-sale information regarding the Shares will be disseminated through the facilities of the CTA. The ITV will be disseminated on a per Share basis by one or more major market data vendors every 15 seconds during the NYSE Arca Core Trading Session. The Exchange may halt trading during the day in which the interruption to the dissemination of the ITV or the value of the underlying futures contracts or applicable benchmark occurs. If the interruption to the dissemination of the ITV, the value of the underlying futures contracts or the applicable benchmark persists past the trading day in which it occurred, the Exchange will halt trading no later than the beginning of the trading day following the interruption. In addition, if the Exchange becomes aware that the NAV with respect to the Shares is not disseminated to all market participants at the same time, it will halt trading in the Shares until such time as the NAV is available to all market participants.

The proposed rule change is designed to promote just and equitable principles of trade and to protect investors and the public interest in that a large amount of information is publicly available regarding the Funds and the Shares, thereby promoting market transparency. Quotation and last sale information for the Wheat Futures Contracts, Soybean Futures Contracts and Sugar No. 11 Futures Contracts are widely disseminated through a variety of major market data vendors worldwide. Complete real-time data for such contracts is available by subscription from Reuters and Bloomberg. The CBOT and ICE Futures also provide delayed futures information on current and past trading sessions and market news free of charge on their Web sites. Each benchmark will be disseminated by one or more major market data vendors every 15 seconds during the NYSE Arca Core Trading Session of 9:30 a.m. to 4:00 p.m. E.T. The spot price of wheat, soybeans and sugar also is available on a 24-hour basis from major market data vendors. Each Fund will provide Web site disclosure of portfolio holdings daily and will include, as applicable, the names, quantity, price and market value of Wheat, Soybean and Sugar Benchmark Component Futures Contracts, as applicable, and other financial instruments, if any, and the characteristics of such instruments and cash equivalents, and amount of cash held in the portfolios of the Funds. The NAV per Share will be calculated daily and made available to all market participants at the same time. One or more major market data vendors will disseminate for the Funds on a daily basis information with respect to the recent NAV per Share and Shares outstanding. NYSE Arca will calculate and disseminate every 15 seconds throughout the NYSE Arca Core Trading Session an updated ITV.

The proposed rule change is designed to perfect the mechanism of a free and open market and, in general, to protect investors and the public interest in that it will facilitate the listing and trading of additional types of exchange-traded products that will enhance competition among market participants, to the benefit of investors and the marketplace. As noted above, the Exchange has in place surveillance procedures relating to trading in the Shares and may obtain information via ISG from other exchanges that are members of ISG or with which the Exchange has entered into a comprehensive surveillance sharing agreement. In addition, as noted above, investors will have ready access to information regarding the Funds' holdings, ITV, and quotation and last sale information for the Shares.

B. Self-Regulatory Organization's Statement on Burden on Competition

The Exchange does not believe that the proposed rule change will impose any burden on competition that is not necessary or appropriate in furtherance of the purposes of the Act.

C. Self-Regulatory Organization's Statement on Comments on the Proposed Rule Change Received From Members, Participants, or Others

No written comments were solicited or received with respect to the proposed rule change.

III. Date of Effectiveness of the Proposed Rule Change and Timing for Commission Action

Within 45 days of the date of publication of this notice in the **Federal Register** or within such longer period (i) As the Commission may designate up to 90 days of such date if it finds such longer period to be appropriate and publishes its reasons for so finding or (ii) as to which the self-regulatory organization consents, the Commission will:

(A) By order approve or disapprove the proposed rule change, or

(B) Institute proceedings to determine whether the proposed rule change should be disapproved.

IV. Solicitation of Comments

Interested persons are invited to submit written data, views, and arguments concerning the foregoing, including whether the proposed rule change is consistent with the Act. Comments may be submitted by any of the following methods:

Electronic Comments

- Use the Commission's Internet comment form (*http://www.sec.gov/rules/sro.shtml*); or
- Send an e-mail to *rule-comments@sec.gov.* Please include File

[32] 15 U.S.C. 78f(b)(5).

Number SR–NYSEArca–2011–48 on the subject line.

Paper Comments

• Send paper comments in triplicate to Elizabeth M. Murphy, Secretary, Securities and Exchange Commission, 100 F Street, NE., Washington, DC 20549–1090.

All submissions should refer to File Number SR–NYSEArca–2011–48. This file number should be included on the subject line if e-mail is used. To help the Commission process and review your comments more efficiently, please use only one method. The Commission will post all comments on the Commission's Internet Web site (*http://www.sec.gov/rules/sro.shtml*). Copies of the submission, all subsequent amendments, all written statements with respect to the proposed rule change that are filed with the Commission, and all written communications relating to the proposed rule change between the Commission and any person, other than those that may be withheld from the public in accordance with the provisions of 5 U.S.C. 552, will be available for Web site viewing and printing in the Commission's Public Reference Room, 100 F Street, NE., Washington, DC 20549, on official business days between the hours of 10 a.m. and 3 p.m. Copies of such filing also will be available for inspection and copying at the principal office of the Exchange. All comments received will be posted without change; the Commission does not edit personal identifying information from submissions. You should submit only information that you wish to make available publicly. All submissions should refer to File Number SR–NYSEArca–2011–48 and should be submitted on or August 22, 2011.

For the Commission, by the Division of Trading and Markets, pursuant to delegated authority.[33]

Elizabeth M. Murphy,

Secretary.

[FR Doc. 2011–19329 Filed 7–29–11; 8:45 am]

BILLING CODE 8011–01–P

[33] 17 CFR 200.30–3(a)(12).

SECURITIES AND EXCHANGE COMMISSION

[Release No. 34–64963; File No. SR–EDGX–2011–21]

Self-Regulatory Organizations; EDGX Exchange, Inc.; Notice of Filing and Immediate Effectiveness of Proposed Rule Change Relating to Amendments to the EDGX Exchange, Inc. Fee Schedule

July 26, 2011.

Pursuant to Section 19(b)(1) of the Securities Exchange Act of 1934 (the ''Act''),[1] and Rule 19b–4 thereunder,[2] notice is hereby given that on July 21, 2011, the EDGX Exchange, Inc. (the ''Exchange'' or the ''EDGX'') filed with the Securities and Exchange Commission (''Commission'') the proposed rule change as described in Items I, II, and III below, which items have been prepared by the self-regulatory organization. The Commission is publishing this notice to solicit comments on the proposed rule change from interested persons.

I. Self-Regulatory Organization's Statement of the Terms of Substance of the Proposed Rule Change

The Exchange proposes to amend its fee schedule applicable to Members [3] and non-members of the Exchange pursuant to EDGX Rule 15.1(a) and (c). Pursuant to the proposed rule change, the Exchange will commence charging fees for Members and non-members for certain logical ports used to receive market data. The Exchange intends to implement this rule proposal effective August 1, 2011. The text of the proposed rule change is available on the Exchange's Internet website at *http://www.directedge.com.*

II. Self-Regulatory Organization's Statement of the Purpose of, and Statutory Basis for, the Proposed Rule Change

In its filing with the Commission, the self-regulatory organization included statements concerning the purpose of, and basis for, the proposed rule change and discussed any comments it received on the proposed rule change. The text of these statements may be examined at the places specified in Item IV below. The self-regulatory organization has prepared summaries, set forth in sections A, B and C below, of the most significant aspects of such statements.

[1] 15 U.S.C. 78s(b)(1).

[2] 17 CFR 240.19b–4.

[3] A Member is any registered broker or dealer, or any person associated with a registered broker or dealer, that has been admitted to membership in the Exchange.

A. Self-Regulatory Organization's Statement of the Purpose of, and Statutory Basis for, the Proposed Rule Change

1. Purpose

The Exchange is proposing to charge a monthly fee for logical ports used to receive market data. Currently, ports used to receive or re-transmit market data are provided free of charge. The Exchange currently charges for logical ports (also commonly referred to as TCP/IP ports) established by the Exchange within the Exchange's system that grant Members or non-members the ability to operate a specific application, such as FIX or High Performance API for order entry. The current monthly fee for these logical ports is $500 per month, where members and non-members receive the first ten (10) sessions free of charge for direct (''Direct'') Sessions only. The Exchange is proposing to include logical ports used to receive market data among those logical ports currently charged at $500 per month.[4] Under the proposed change, the quantity of logical ports used to receive market data will be included among those ports used for order entry (FIX, HP–API) or for drop copies (DROP). Exchange customers will continue to receive the first ten (10) sessions free of charge, regardless of the type of logical port used for Direct Sessions (FIX, HP–API, DROP, or data), and thereafter be charged a $500 fee per month per logical port. The charge will apply to Members and non-members. The Exchange notes that the proposed port fees are consistent with similar logical port fees charged by other exchanges.[5]

The Exchange believes that the imposition of port fees for logical ports used to receive market data will promote efficient use of the ports by market participants, helping the Exchange to continue to maintain and improve its infrastructure, while also encouraging Exchange customers to request and enable only the ports that

[4] The Exchange notes that ports used to request a re-transmission of market data from the Exchange will continue to be provided free of charge.

[5] *See, e.g.,* Rule 7015(g) of The NASDAQ Stock Market LLC (''NASDAQ'') (setting forth, among other fees for access services, port fees charged to members and non-members used for market data delivery over the internet); Securities Exchange Act Release No. 63197 (October 27, 2010), 75 FR 67791 (November 3, 2010) (SR–NASDAQ–2010–136) (adopting Access Services fees, including fees for ports used to receive market data) 72 FR 13328 (March 21, 2007) (SR–NASDAQ–2006–064) (increasing Internet port fee from $200 to $600 per Internet port that is used to deliver market data); Securities Exchange Act Release No. 60586 (August 28, 2009), 74 FR 46256 (September 8, 2009) (SR–BATS–2009–026) (establishing fees for ports used by members and non-members to enter orders and receive market data).

are necessary for their operations related to the Exchange.

The Exchange will implement the proposed rule change on August 1, 2011.

2. Statutory Basis

The Exchange believes that the proposed rule change is consistent with the objectives of Section 6 of the Act,[6] in general, and furthers the objectives of Section 6(b)(4),[7] in particular, as it is designed to provide for the equitable allocation of reasonable dues, fees and other charges among its Members and other persons using its facilities. The Exchange believes that its proposed logical data port fees are reasonable in light of the benefits to members of market data access. In addition, the Exchange believes that its fees are equitably allocated among its constituents based upon the number of access ports that they require to receive data from the Exchange. Furthermore, the fees associated with logical data ports will be equitably allocated to all constituents as the fees will be uniform in application to all Members and non-members. Finally, the Exchange believes that the fees obtained will enable it to cover its infrastructure costs associated with allowing Members and non-members to establish logical ports to connect to the Exchange's systems and continue to maintain and improve its infrastructure, market technology, and services.

B. Self-Regulatory Organization's Statement on Burden on Competition

The proposed rule change does not impose any burden on competition that is not necessary or appropriate in furtherance of the purposes of the Act.

C. Self-Regulatory Organization's Statement on Comments on the Proposed Rule Change Received From Members, Participants or Others

The Exchange has not solicited, and does not intend to solicit, comments on this proposed rule change. The Exchange has not received any unsolicited written comments from members or other interested parties.

III. Date of Effectiveness of the Proposed Rule Change and Timing for Commission Action

The foregoing rule change has become effective pursuant to Section 19(b)(3) of the Act[8] and Rule 19b–4(f)(2)[9] thereunder. At any time within 60 days of the filing of such proposed rule change, the Commission summarily may temporarily suspend such rule change if it appears to the Commission that such action is necessary or appropriate in the public interest, for the protection of investors, or otherwise in furtherance of the purposes of the Act.

IV. Solicitation of Comments

Interested persons are invited to submit written data, views, and arguments concerning the foregoing, including whether the proposed rule change is consistent with the Act. Comments may be submitted by any of the following methods:

Electronic Comments

- Use the Commission's Internet comment form (*http://www.sec.gov/rules/sro.shtml*); or
- Send an e-mail to *rule-comments@sec.gov.* Please include File Number SR–EDGX–2011–21 on the subject line.

Paper Comments

- Send paper comments in triplicate to Elizabeth M. Murphy, Secretary, Securities and Exchange Commission, 100 F Street, NE., Washington, DC 20549–1090.

All submissions should refer to File Number SR–EDGX–2011–21. This file number should be included on the subject line if e-mail is used. To help the Commission process and review your comments more efficiently, please use only one method. The Commission will post all comments on the Commission's Internet website (*http://www.sec.gov/rules/sro.shtml*). Copies of the submission, all subsequent amendments, all written statements with respect to the proposed rule change that are filed with the Commission, and all written communications relating to the proposed rule change between the Commission and any person, other than those that may be withheld from the public in accordance with the provisions of 5 U.S.C. 552, will be available for website viewing and printing in the Commission's Public Reference Room, 100 F Street, NE., Washington, DC 20549, on official business days between the hours of 10 a.m. and 3 p.m. Copies of the filing also will be available for inspection and copying at the principal office of the Exchange. All comments received will be posted without change; the Commission does not edit personal identifying information from submissions. You should submit only information that you wish to make available publicly. All submissions should refer to File Number SR–EDGX–2011–21 and should be submitted on or before August 22, 2011.

For the Commission, by the Division of Trading and Markets, pursuant to delegated authority.[10]

Elizabeth M. Murphy,

Secretary.

[FR Doc. 2011–19325 Filed 7–29–11; 8:45 am]

BILLING CODE 8011–01–P

[6] 15 U.S.C. 78f.

[7] 15 U.S.C. 78f(b)(4).

[8] 15 U.S.C. 78s(b)(3)(A).

[9] 17 CFR 19b–4(f)(2).

[10] 17 CFR 200.30–3(a)(12).

SECURITIES AND EXCHANGE COMMISSION

[Release No. 34–64962; File No. SR–EDGA–2011–21]

Self-Regulatory Organizations; EDGA Exchange, Inc.; Notice of Filing And Immediate Effectiveness of Proposed Rule Change To Amend EDGA Rule 11.5(c)(8) Regarding the Description of the Non-Displayed Order Type

July 26, 2011.

Pursuant to Section 19(b)(1) of the Securities Exchange Act of 1934 (''Act'')[1] and Rule 19b–4 thereunder,[2] notice is hereby given that on July 15, 2011, EDGA Exchange, Inc. (''EDGA'' or the ''Exchange'') filed with the Securities and Exchange Commission (''SEC'' or ''Commission'') the proposed rule change as described in Items I and II below, which Items have been prepared by EDGA. The Commission is publishing this notice to solicit comments on the proposed rule change, from interested persons.

I. Self-Regulatory Organization's Statement of the Terms of Substance of the Proposed Rule Change

The Exchange proposes to amend EDGA Rule 11.5(c)(8) regarding the description of the Non-Displayed order type. The text of the proposed rule change is available on the Exchange's Web site at *http://www.directedge.com,* at the Exchange's principal office, at the Public Reference Room of the Commission, and at the Commission's Web site at *http://www.sec.gov.*

II. Self-Regulatory Organization's Statement of the Purpose of, and Statutory Basis for, the Proposed Rule Change

In its filing with the Commission, the Exchange included statements concerning the purpose of, and basis for, the proposed rule change and discussed any comments it received on the proposed rule change. The text of these statements may be examined at the

[1] 15 U.S.C. 78s(b)(1).

[2] 17 CFR 240.19b–4.

places specified in Item IV below. The self-regulatory organization has prepared summaries, set forth in Sections A, B and C below, of the most significant aspects of such statements.

A. Self-Regulatory Organization's Statement of the Purpose of, and Statutory Basis for, the Proposed Rule Change

1. Purpose

The Exchange proposes to amend Rule 11.5(c)(8) to correct an inadvertent error in the definition of ''Non-Displayed Orders.''

Exchange Rule 11.5(c)(8) states, in part, that for a Non-Displayed order, ''the System [3] shall not accept a Non-Displayed Order that is priced better than the midpoint of the NBBO.''

However, currently, on EDGA, Non-Displayed orders are accepted and posted on the EDGA Book (''Book'' or ''EDGA Book'')[4] at their specified limit price for limit orders or executed immediately for market orders. This occurs regardless of whether the Non-Displayed Orders are priced better than the midpoint of the NBBO.

The following examples illustrate the operation of Non-Displayed Orders:

Assume the NBBO is 1.00 x 1.10, and a Non-Displayed Order is entered to sell 100 shares at $1.03. Such Non-Displayed Order will be posted to the EDGA Book at $1.03 or executed if there is contra-side trading interest at $1.03 or higher.[5]

Assume the NBBO changes and is now 1.04 x 1.10 and a Non-Displayed Order is entered to sell 100 shares at $1.07. Such Non-Displayed Order will be posted to the EDGA Book at $1.07 or executed if there is contra-side trading interest at $1.07 or higher.

Assume the NBBO remains at 1.04 x 1.10 and a Non-Displayed Order is entered to sell 100 shares at $1.04. Such Non-Displayed Order will be posted to the EDGA Book at $1.04, executed if there is contra-side trading interest at $1.04 or higher, or routed to an away market if the order is marked eligible for routing.

The Exchange believes that this proposed amendment provides more transparency regarding the System's processing of this order type by correcting an inadvertent error in the rule text of Non-Displayed Orders.

2. Statutory Basis

The statutory basis for the proposed rule change is Section 6(b)(5) of the Act,[6] which requires the rules of an exchange to promote just and equitable principles of trade, to remove impediments to and perfect the mechanism of a free and open market and a national market system and, in general, to protect investors and the public interest. The Exchange believes that providing that Non-Displayed orders may be accepted and posted on the Book regardless of whether they are priced better than the midpoint encourages liquidity and potential price improvement for transactions without arbitrarily restricting liquidity from being executed at the Exchange. The Exchange also believes that by correcting an inadvertent error in the definition of ''Non-Displayed Orders'' in EDGA Rule 11.5(c)(8), the proposed rule promotes the efficient execution of investor transactions, and thus investor confidence, over the long term.

B. Self-Regulatory Organization's Statement on Burden on Competition

The Exchange does not believe that the proposed rule change will impose any burden on competition that is not necessary or appropriate in furtherance of the purposes of the Act.

C. Self-Regulatory Organization's Statement on Comments on the Proposed Rule Change Received From Members, Participants, or Others

The Exchange has neither solicited nor received written comments on the proposed rule change.

III. Date of Effectiveness of the Proposed Rule Change and Timing for Commission Action

Because the proposed rule change: (i) Does not significantly affect the protection of investors or the public interest; (ii) does not impose any significant burden on competition; and (iii) does not become operative for 30 days after the date of the filing, or such shorter time as the Commission may designate if consistent with the protection of investors and the public interest, the proposed rule change has become effective pursuant to Section 19(b)(3)(A) of the Act[7] and Rule 19b–4(f)(6) thereunder.[8]

The Exchange has requested that the Commission waive the 30-day operative delay. The Commission believes that waiving the 30-day operative delay is consistent with the protection of investors and the public interest because other national securities exchanges have adopted similar Non-displayed order types,[9] and this proposal does not raise any novel issues. Therefore, the Commission designates the proposed rule change to be operative upon filing with the Commission.[10]

At any time within 60 days of the filing of the proposed rule change, the Commission summarily may temporarily suspend such rule change if it appears to the Commission that such action is necessary or appropriate in the public interest, for the protection of investors, or otherwise in furtherance of the purposes of the Act.

IV. Solicitation of Comments

Interested persons are invited to submit written data, views, and arguments concerning the foregoing, including whether the proposed rule change is consistent with the Act. Comments may be submitted by any of the following methods:

Electronic Comments

- Use the Commission's Internet comment form (*http://www.sec.gov/rules/sro.shtml*); or
- Send an e-mail to *rule-comments@sec.gov.* Please include File Number SR–EDGA–2011–21 on the subject line.

Paper Comments

- Send paper comments in triplicate to Elizabeth M. Murphy, Secretary, Securities and Exchange Commission, 100 F Street, NE., Washington, DC 20549–1090.

All submissions should refer to File Number SR–EDGA–2011–21. This file number should be included on the subject line if e-mail is used. To help the Commission process and review your comments more efficiently, please use only one method. The Commission will post all comments on the Commission's Internet Web site (*http://www.sec.gov/rules/sro.shtml*). Copies of the submission, all subsequent amendments, all written statements with respect to the proposed rule change that are filed with the Commission, and all written

[3] As defined in Rule 1.5(aa).

[4] As defined in Rule 1.5(d).

[5] This could include a Non-Displayed buy order or displayed buy order.

[6] 15 U.S.C. 78f(b)(5).

[7] 15 U.S.C. 78s(b)(3)(A).

[8] 17 CFR 240.19b–4(f)(6). In addition, Rule 19b–4(f)(6)(iii) requires that a self-regulatory organization submit to the Commission written notice of its intent to file the proposed rule change, along with a brief description and text of the proposed rule change, at least five business days prior to the date of filing of the proposed rule change, or such shorter time as designated by the Commission. The Exchange has satisfied this requirement.

[9] *See, e.g.,* BATS Rule 11.9(c)(11) and Nasdaq Rule 4751(e)(3).

[10] For purposes only of waiving the 30-day operative delay, the Commission has considered the proposed rule's impact on efficiency, competition, and capital formation. *See* 15 U.S.C. 78c(f).

communications relating to the proposed rule change between the Commission and any person, other than those that may be withheld from the public in accordance with the provisions of 5 U.S.C. 552, will be available for Web site viewing and printing in the Commission's Public Reference Room, 100 F Street, NE., Washington, DC 20549, on official business days between the hours of 10:00 a.m. and 3:00 p.m. Copies of such filing also will be available for inspection and copying at the principal office of EDGA. All comments received will be posted without change; the Commission does not edit personal identifying information from submissions. You should submit only information that you wish to make publicly available. All submissions should refer to File Number SR–EDGA–2011–21 and should be submitted on or before August 22, 2011.

For the Commission, by the Division of Trading and Markets, pursuant to delegated authority.[11]

Elizabeth M. Murphy,

Secretary.

[FR Doc. 2011–19326 Filed 7–29–11; 8:45 am]

BILLING CODE 8011–01–P

[11] 17 CFR 200.30–3(a)(12).

SECURITIES AND EXCHANGE COMMISSION

[Release No. 34–64964; File No. SR–EDGA–2011–22]

Self-Regulatory Organizations; EDGA Exchange, Inc.; Notice of Filing and Immediate Effectiveness of Proposed Rule Change Relating to Amendments to the EDGA Exchange, Inc. Fee Schedule

July 26, 2011.

Pursuant to Section 19(b)(1) of the Securities Exchange Act of 1934 (the ''Act''),[1] and Rule 19b–4 thereunder,[2] notice is hereby given that on July 21, 2011, the EDGA Exchange, Inc. (the ''Exchange'' or the ''EDGA'') filed with the Securities and Exchange Commission (''Commission'') the proposed rule change as described in Items I, II, and III below, which items have been prepared by the self-regulatory organization. The Commission is publishing this notice to solicit comments on the proposed rule change from interested persons.

[1] 15 U.S.C. 78s(b)(1).

[2] 17 CFR 240.19b–4.

I. Self-Regulatory Organization's Statement of the Terms of Substance of the Proposed Rule Change

The Exchange proposes to amend its fee schedule applicable to Members [3] and non-members of the Exchange pursuant to EDGA Rule 15.1(a) and (c). Pursuant to the proposed rule change, the Exchange will commence charging fees for Members and non-members for certain logical ports used to receive market data. The Exchange intends to implement this rule proposal effective August 1, 2011. The text of the proposed rule change is available on the Exchange's Internet Web site at *http://www.directedge.com.*

II. Self-Regulatory Organization's Statement of the Purpose of, and Statutory Basis for, the Proposed Rule Change

In its filing with the Commission, the self-regulatory organization included statements concerning the purpose of, and basis for, the proposed rule change and discussed any comments it received on the proposed rule change. The text of these statements may be examined at the places specified in Item IV below. The self-regulatory organization has prepared summaries, set forth in sections A, B and C below, of the most significant aspects of such statements.

A. Self-Regulatory Organization's Statement of the Purpose of, and Statutory Basis for, the Proposed Rule Change

1. Purpose

The Exchange is proposing to charge a monthly fee for logical ports used to receive market data. Currently, ports used to receive or re-transmit market data are provided free of charge. The Exchange currently charges for logical ports (also commonly referred to as TCP/IP ports) established by the Exchange within the Exchange's system that grant Members or non-members the ability to operate a specific application, such as FIX or High Performance API for order entry. The current monthly fee for these logical ports is $500 per month, where members and non-members receive the first ten (10) sessions free of charge for direct (''Direct'') Sessions only. The Exchange is proposing to include logical ports used to receive market data among those logical ports currently charged at $500 per month.[4] Under the proposed change, the quantity of logical ports used to receive market data will be included among those ports used for order entry (FIX, HP–API) or for drop copies (DROP). Exchange customers will continue to receive the first ten (10) sessions free of charge, regardless of the type of logical port used for Direct Sessions (FIX, HP–API, DROP, or data), and thereafter be charged a $500 fee per month per logical port. The charge will apply to Members and non-members. The Exchange notes that the proposed port fees are consistent with similar logical port fees charged by other exchanges.[5]

The Exchange believes that the imposition of port fees for logical ports used to receive market data will promote efficient use of the ports by market participants, helping the Exchange to continue to maintain and improve its infrastructure, while also encouraging Exchange customers to request and enable only the ports that are necessary for their operations related to the Exchange.

The Exchange will implement the proposed rule change on August 1, 2011.

2. Statutory Basis

The Exchange believes that the proposed rule change is consistent with the objectives of Section 6 of the Act,[6] in general, and furthers the objectives of Section 6(b)(4),[7] in particular, as it is designed to provide for the equitable allocation of reasonable dues, fees and other charges among its Members and other persons using its facilities. The Exchange believes that its proposed logical data port fees are reasonable in light of the benefits to members of market data access. In addition, the Exchange believes that its fees are equitably allocated among its constituents based upon the number of access ports that they require to receive data from the Exchange. Furthermore, the fees associated with logical data ports will be equitably allocated to all

[3] A Member is any registered broker or dealer, or any person associated with a registered broker or dealer, that has been admitted to membership in the Exchange.

[4] The Exchange notes that ports used to request a re-transmission of market data from the Exchange will continue to be provided free of charge.

[5] *See, e.g.,* Rule 7015(g) of The NASDAQ Stock Market LLC (''NASDAQ'') (setting forth, among other fees for access services, port fees charged to members and non-members used for market data delivery over the Internet); Securities Exchange Act Release No. 63197 (October 27, 2010), 75 FR 67791 (November 3, 2010) (SR–NASDAQ–2010–136)(adopting Access Services fees, including fees for ports used to receive market data) 72 FR 13328 (March 21, 2007) (SR–NASDAQ–2006–064) (increasing Internet port fee from $200 to $600 per Internet port that is used to deliver market data); Securities Exchange Act Release No. 60586 (August 28, 2009), 74 FR 46256 (September 8, 2009) (SR–BATS–2009–026) (establishing fees for ports used by members and non-members to enter orders and receive market data).

[6] 15 U.S.C. 78f.

[7] 15 U.S.C. 78f(b)(4).

constituents as the fees will be uniform in application to all Members and non-members. Finally, the Exchange believes that the fees obtained will enable it to cover its infrastructure costs associated with allowing Members and non-members to establish logical ports to connect to the Exchange's systems and continue to maintain and improve its infrastructure, market technology, and services.

B. Self-Regulatory Organization's Statement on Burden on Competition

The proposed rule change does not impose any burden on competition that is not necessary or appropriate in furtherance of the purposes of the Act.

C. Self-Regulatory Organization's Statement on Comments on the Proposed Rule Change Received From Members, Participants or Others

The Exchange has not solicited, and does not intend to solicit, comments on this proposed rule change. The Exchange has not received any unsolicited written comments from members or other interested parties.

III. Date of Effectiveness of the Proposed Rule Change and Timing for Commission Action

The foregoing rule change has become effective pursuant to Section 19(b)(3) of the Act [8] and Rule 19b–4(f)(2) [9] thereunder. At any time within 60 days of the filing of such proposed rule change, the Commission summarily may temporarily suspend such rule change if it appears to the Commission that such action is necessary or appropriate in the public interest, for the protection of investors, or otherwise in furtherance of the purposes of the Act.

IV. Solicitation of Comments

Interested persons are invited to submit written data, views, and arguments concerning the foregoing, including whether the proposed rule change is consistent with the Act. Comments may be submitted by any of the following methods:

Electronic Comments

- Use the Commission's Internet comment form (*http://www.sec.gov/rules/sro.shtml*); or
- Send an e-mail to *rule-comments@sec.gov.* Please include File Number SR–EDGA–2011–22 on the subject line.

Paper comments

- Send paper comments in triplicate to Elizabeth M. Murphy, Secretary, Securities and Exchange Commission, 100 F Street, NE., Washington, DC 20549–1090.

All submissions should refer to File Number SR–EDGA–2011–22. This file number should be included on the subject line if e-mail is used. To help the Commission process and review your comments more efficiently, please use only one method. The Commission will post all comments on the Commission's Internet Web site (*http://www.sec.gov/rules/sro.shtml*). Copies of the submission, all subsequent amendments, all written statements with respect to the proposed rule change that are filed with the Commission, and all written communications relating to the proposed rule change between the Commission and any person, other than those that may be withheld from the public in accordance with the provisions of 5 U.S.C. 552, will be available for Web site viewing and printing in the Commission's Public Reference Room, 100 F Street, NE., Washington, DC 20549, on official business days between the hours of 10 a.m. and 3 p.m. Copies of the filing also will be available for inspection and copying at the principal office of the Exchange. All comments received will be posted without change; the Commission does not edit personal identifying information from submissions. You should submit only information that you wish to make available publicly. All submissions should refer to File Number SR–EDGA–2011–22 and should be submitted on or before August 22, 2011.

For the Commission, by the Division of Trading and Markets, pursuant to delegated authority.[10]

Elizabeth M. Murphy,

Secretary.

[FR Doc. 2011–19327 Filed 7–29–11; 8:45 am]

BILLING CODE 8011–01–P

[8] 15 U.S.C. 78s(b)(3)(A).

[9] 17 CFR 19b–4(f)(2).

[10] 17 CFR 200.30–3(a)(12).

SECURITIES AND EXCHANGE COMMISSION

[Release No. 34–64966; File No. SR–NYSEAmex–2011–50]

Self-Regulatory Organizations; NYSE Amex LLC; Notice of Filing and Immediate Effectiveness of Proposed Rule Change Amending Commentary .07 to NYSE Amex Rule 904 To Increase Position Limits for Options on the SPDR® S&P 500® Exchange-Traded Fund, Which List and Trade Under the Option Symbol SPY, and To Update the Names and One Trading Symbol for the Options Reflected Therein, Including SPY

July 26, 2011.

Pursuant to Section 19(b)(1) [1] of the Securities Exchange Act of 1934 (the ''Act'') [2] and Rule 19b–4 thereunder,[3] notice is hereby given that, on July 11, 2011, NYSE Amex LLC (the ''Exchange'' or ''NYSE Amex'') filed with the Securities and Exchange Commission (the ''Commission'') the proposed rule change as described in Items I and II below, which Items have been prepared by the Exchange. The Commission is publishing this notice to solicit comments on the proposed rule change from interested persons.

I. Self-Regulatory Organization's Statement of the Terms of the Substance of the Proposed Rule Change

The Exchange proposes to amend Commentary .07 to NYSE Amex Rule 904 to increase position limits for options on the SPDR® S&P 500® exchange-traded fund (''SPY ETF''),[4] which list and trade under the option symbol SPY, and to update the names and one trading symbol for the options reflected therein, including SPY. The text of the proposed rule change is available at the Exchange's Web site at *http://www.nyse.com,* on the Commission's Web site at *http://www.sec.gov*, at the Exchange's principal office, and at the Commission's Public Reference Room.

II. Self-Regulatory Organization's Statement of the Purpose of, and Statutory Basis for, the Proposed Rule Change

In its filing with the Commission, the self-regulatory organization included

[1] 15 U.S.C.78s(b)(1).

[2] 15 U.S.C. 78a.

[3] 17 CFR 240.19b–4.

[4] ''SPDR®,'' ''Standard & Poor's®,'' ''S&P®,'' ''S&P 500®,'' and ''Standard & Poor's 500'' are registered trademarks of Standard & Poor's Financial Services LLC. The SPDR S&P 500 ETF represents ownership in the SPDR S&P 500 Trust, a unit investment trust that generally corresponds to the price and yield performance of the SPDR S&P 500 Index.

statements concerning the purpose of, and basis for, the proposed rule change and discussed any comments it received on the proposed rule change. The text of those statements may be examined at the places specified in Item IV below. The Exchange has prepared summaries, set forth in sections A, B, and C below, of the most significant parts of such statements.

A. Self-Regulatory Organization's Statement of the Purpose of, and Statutory Basis for, the Proposed Rule Change

1. Purpose

The purpose of the proposal is to amend Commentary .07 to NYSE Amex Rule 904 to increase position limits for SPY options from 300,000 to 900,000 contracts on the same side of the market and to update the names, and one trading symbol, for the options reflected therein, including SPY.[5] The Exchange is basing this proposal on a recently approved rule change by NASDAQ OMX PHLX (''PHLX'').[6]

Background

Institutional and retail traders have greatly increased their demand for SPY options for hedging and trading purposes, such that these options have experienced an explosive gain in popularity and have been the most actively traded options in the U.S. in terms of volume for the last two years. For example, SPY options traded a total of 33,341,698 contracts across all exchanges from March 1, 2011 through March 16, 2011. In contrast, over the same time period options on the PowerShares QQQ Trust℠, Series 1 (''QQQ''℠),[7] the third [sic] most actively traded option, traded a total of 8,730,718 contracts (less than 26.2% of the volume of SPY options).

Currently, SPY options have a position limit of only 300,000 contracts on the same side of the market while QQQ options, which are comparable to SPY options but exhibit significantly lower volume, have a position limit of 900,000 contracts on the same side of the market. The Exchange believes that SPY options should, like options on QQQ, have a position limit of 900,000 contracts. Given the increase in volume and continuous unprecedented demand for trading SPY options, the Exchange believes that the current position limit of 300,000 contracts is entirely too low and is a deterrent to the optimal use of the product for hedging and trading purposes. There are multiple reasons to increase the position limit for SPY options.

First, traders have informed the Exchange that the current SPY option position limit of 300,000 contracts, which has remained flat for more than five years despite the tremendous trading volume increase, is no longer sufficient for optimal trading and hedging purposes. SPY options are, as noted, used by large institutions and traders as a means to invest in or hedge the overall direction of the market. Second, SPY options are one-tenth the size of options on the S&P 500 Index, traded under the symbol SPX.[8] Thus, a position limit of 300,000 contracts in SPY options is equivalent to a 30,000 contract position limit in options on SPX. Traders who trade SPY options to hedge positions in SPX options (and the SPY ETF) have indicated on several occasions that the current position limit for SPY options is simply too restrictive, which may adversely affect their (and the Exchange's) ability to provide liquidity in this product. Finally, the products that are perhaps most comparable to SPY options, namely options on QQQ, are subject to a 900,000 contract position limit on the same side of the market.[9] This has, in light of the huge run-up in SPY option trading making them the number one nationally-ranked option in terms of volume, resulted in a skewed and unacceptable SPY option position limit. Specifically, the position limit for SPY options at 300,000 contracts is but 33% of the position limit for the less active options on QQQ at 900,000 contracts.[10] The Exchange proposes that SPY options similarly be subject to a position limit of 900,000 contracts.

The volume and notional value of SPY options and QQQ options as well as the volume and market capitalizations of their underlying ETFs, are set forth below:

Option national rank 2010	Option symbol	Name of underlying ETF	Option ADV 2010	Option notional value* as of December 31, 2010	Current options position limit
1	SPY	SPDR S&P 500.	3,625,904 contracts	$177,823,76 million	300,000 contracts.
4	QQQ	Powershares QQQ Trust.	963,502 contracts	$27,141,91 million	900,000 contracts.

ETF Nat'l rank 2010	Name of ETF	ETF ADV 2010	ETF market capitalization December 31, 2010	ETF average dollar volume
1	SPDR S&P 500	210,232,241 shares	$90,280.71 million	$20,794 million
3	Powershares QQQ Trust	85,602,200 shares	$23,564.8 million	$3,593 million

*Notional value is calculated as follows: OI × Close × 100; where OI = underlying security's open interest (in contracts), Close = closing price of underlying security on 12/31/2010.

[5] By virtue of NYSE Amex Rule 905, which is not amended by this filing, exercise limits on SPY options would be the same as position limits for SPY options established in Commentary .07 to NYSE Amex Rule 904.

[6] *See* Securities Exchange Act Release No. 64695 (June 17, 2011), 76 FR 36942 (June 23, 2011) (SR–Phlx–2011–58). The Exchange commented favorably on that PHLX proposal, noting that ''the continued disparate treatment of SPY options, which have a position limit and are traded on multiple exchanges, versus SPX options, which have no position limit and are traded exclusively on CBOE [the Chicago Board Options Exchange], only serves to thwart competition and harm the marketplace,'' and that the ''PHLX's Proposal to increase the position limits for SPY options is a step in the right direction.'' *See* (*http://www.sec.gov/comments/sr-phlx-2011-58/phlx201158-1.pdf*).

[7] QQQ options were formerly known as options on the Nasdaq-100 Tracking Stock℠ (former option symbol QQQQ℠). NASDAQ, Nasdaq-100 Index, Nasdaq-100 Index Tracking Stock and QQQ are trade/service marks of The Nasdaq Stock Market, Inc. and have been licensed for use by Invesco PowerShares Capital Management LLC.

[8] CBOE, which exclusively lists and trades SPX options, has established that there are no position limits on SPX options. *See* CBOE Rule 24.4 and Securities Exchange Act Release No. 44994 (October 26, 2001), 66 FR 55722 (November 2, 2001) (SR–CBOE–2001–22).

[9] *See* Commentary .07 to Rule 904 and Securities Exchange Act Release No. 57415 (March 3, 2008), 73 FR 12479 (March 7, 2008) (SR–Amex–2008–16). *See also* Securities Exchange Act Release No. 51316 (March 3, 2005), 70 FR 12251 (March 11, 2005) (SR–Amex–2005–029).

[10] Similarly to SPY options being one-tenth the size of options on SPX, QQQ options are also one-tenth the size of options on the related index NASDAQ–100 Index (option symbol NDX). The position limit for QQQ options and its related index NDX have a comparable relationship to that of SPY options and SPX. That is, the position limit for options on QQQ is 900,000 contracts and there is no position limit for NDX options.

The Exchange notes that the Large Option Position Reporting requirement in NYSE Amex Rule 906 would continue to apply. Rule 906 requires ATP Holders to file a report with the Exchange with respect to each account in which the ATP Holder has an interest; each account of a partner, officer, director, trustee or employee of such ATP Holder; and each customer account that has established an aggregate position (whether long or short) that meets certain determined thresholds (*e.g.,* 200 or more option contracts if the underlying security is a stock or Exchange-Traded Fund Share). Rule 906 also permits the Exchange to impose a higher margin requirement upon the account of an ATP Holder when it determines that the account maintains an under-hedged position. Furthermore, large stock holdings must be disclosed to the Commission by way of Schedules 13D or 13G.[11]

Monitoring accounts maintaining large positions provides the Exchange with the information necessary to determine whether to impose additional margin and/or whether to assess capital charges upon an ATP Holder carrying the account. In addition, the Commission's net capital rule, Rule 15c3–1 under the Securities Exchange Act of 1934 (''Act''),[12] imposes a capital charge on ATP Holders to the extent of any margin deficiency resulting from the higher margin requirement, which should serve as an additional form of protection.

The Exchange believes that position and exercise limits, at their current levels, no longer serve their stated purpose. There has been a steadfast and significant increase over the last decade in the overall volume of exchange-traded options; position limits, however, have not kept up with the volume. Part of this volume is attributable to a corresponding increase in the number of overall market participants, which has, in turn, brought about additional depth and increased liquidity in exchange-traded options.[13]

As the anniversary of listed options trading approaches its fortieth year, the Exchange believes that the existing surveillance procedures and reporting requirements at the Exchange, other options exchanges, and at the several clearing firms are capable of properly identifying unusual and/or illegal trading activity. In addition, routine oversight inspections of the Exchange's regulatory programs by the Commission have not uncovered any material inconsistencies or shortcomings in the manner in which the Exchange's market surveillance is conducted. These procedures utilize daily monitoring of market movements via automated surveillance techniques to identify unusual activity in both options and underlying stocks.[14]

Finally, the Exchange believes that while position limits on options on QQQ, which as noted are similar to SPY options, has been gradually expanded from 75,000 contracts to the current level of 900,000 contracts since 2005, there have been no adverse effects on the market as a result of this position limit increase.[15] Likewise, there have been no adverse effects on the market from expanding the position limit for SPY options from 75,000 contracts to the current level of 300,000 contracts in 2005.[16]

The Exchange believes that restrictive option position limits prevent large customers, such as mutual funds and pension funds, from using options to gain meaningful exposure to and hedging protection through the use of SPY options. This can result in lost liquidity in both the options market and the equity market. The proposed position limit increase would remedy this situation to the benefit of large as well as retail traders, investors, and public customers. The Exchange believes that increasing position and exercise limits for SPY options would lead to a more liquid and competitive market environment for SPY options that would benefit customers interested in this product.

Update to Names

The Exchange proposes non-substantive technical changes to update the names and one trading symbol for the option products specifically identified within Commentary .07 to NYSE Amex Rule 904. This change would result in Commentary .07 reflecting the current names and symbols by which these products trade in the marketplace as follows: Nasdaq-100 Tracking Stock (QQQQ) changes to PowerShares QQQ Trust℠, Series 1 (QQQ); Standard & Poor's Depositary Receipts Trust (SPDR) changes to SPDR® S&P 500® ETF (SPY); and DIAMONDS Trust changes to SPDR® Dow Jones Industrial Average℠ ETF Trust (DIA).

2. Statutory Basis

The proposed rule change is consistent with Section 6(b)[17] of the Act, in general, and furthers the objectives of Section 6(b)(5),[18] in particular, in that it is designed to prevent fraudulent and manipulative acts and practices, to promote just and equitable principles of trade, to foster cooperation and coordination with persons engaged in facilitating transactions in securities, to remove impediments to and perfect the mechanism of a free and open market and a national market system and, in general, to protect investors and the public interest. The Exchange is proposing to expand the position limits on SPY options. The Exchange believes that this proposal would be beneficial to large market makers (which generally have the greatest potential and actual ability to provide liquidity and depth in the product), as well as retail traders, investors, and public customers.

B. Self-Regulatory Organization's Statement on Burden on Competition

The Exchange does not believe that the proposed rule change will impose any burden on competition that is not necessary or appropriate in furtherance of the purposes of the Act.

C. Self-Regulatory Organization's Statement on Comments on the Proposed Rule Change Received From Members, Participants, or Others

The Exchange has neither solicited nor received written comments on the proposed rule change.

III. Date of Effectiveness of the Proposed Rule Change and Timing for Commission Action

Because the proposed rule change does not (i) Significantly affect the protection of investors or the public interest; (ii) impose any significant burden on competition; and (iii) become

[11] 17 CFR 240.13d–1

[12] 17 CFR 240.15c3–1.

[13] The Commission has previously observed that: ''Since the inception of standardized options trading, the options exchanges have had rules imposing limits on the aggregate number of options contracts that a member or customer could hold or exercise. These rules are intended to prevent the establishment of options positions that can be used or might create incentives to manipulate or disrupt the underlying market so as to benefit the options position. In particular, position and exercise limits are designed to minimize the potential for mini-manipulations and for corners or squeezes of the underlying market. In addition such limits serve to reduce the possibility for disruption of the options market itself, especially in illiquid options classes.'' *See* Securities Exchange Act Release No. 39489 (December 24, 1997), 63 FR 276, 278 (January 5, 1998) (SR–CBOE–97–11) (footnote omitted).

[14] These procedures have been effective for the surveillance of SPY options trading and will continue to be employed.

[15] *See supra* note 9. *See* e-mail from Joseph Corcoran, Chief Counsel, NYSE to Arisa Tinaves, Special Counsel, Division of Trading and Markets, dated July 19, 2011.

[16] *See* Securities Exchange Act Release No. 51043 (January 14, 2005), 70 FR 3402 (January 24, 2005) (SR–Amex–2005–06).

[17] 15 U.S.C. 78f(b).

[18] 15 U.S.C. 78f(b)(5).

operative prior to 30 days from the date on which it was filed, or such shorter time as the Commission may designate, if consistent with the protection of investors and the public interest, provided that the self-regulatory organization has given the Commission written notice of its intent to file the proposed rule change at least five business days prior to the date of filing of the proposed rule change or such shorter time as designated by the Commission, the proposed rule change has become effective pursuant to Section 19(b)(3)(A) of the Act [19] and Rule 19b–4(f)(6)(iii) thereunder.[20]

A proposed rule change filed under Rule 19b–4(f)(6) [21] normally does not become operative prior to 30 days after the date of the filing. However, pursuant to Rule 19b–4(f)(6)(iii),[22] the Commission may designate a shorter time if such action is consistent with the protection of investors and the public interest. The Exchange has requested that the Commission waive the 30-day operative delay so that the proposal may become operative immediately upon filing. The Commission believes that waiving the 30-day operative delay is consistent with the protection of investors and the public interest, because increasing position and exercise limits for SPY options would lead to a more liquid and competitive market environment that would benefit customers interested in this product. Additionally, it will enable the Exchange's position and exercise limits for SPY options to be consistent with those of other exchanges that have already adopted the higher position and exercise limits. Therefore, the Commission designates the proposal operative upon filing.[23]

At any time within 60 days of the filing of such proposed rule change, the Commission summarily may temporarily suspend such rule change if it appears to the Commission that such action is necessary or appropriate in the public interest, for the protection of investors, or otherwise in furtherance of the purposes of the Act.

[19] 15 U.S.C. 78s(b)(3)(A).

[20] 17 CFR 240.19b–4(f)(6).

[21] 17 CFR 240.19b–4(f)(6). In addition, Rule 19b–4(f)(6)(iii) requires that a self-regulatory organization submit to the Commission written notice of its intent to file the proposed rule change, along with a brief description and text of the proposed rule change, at least five business days prior to the filing of the proposed rule change, or such shorter time as designated by the Commission. The Commission notes that the Exchange has satisfied this requirement.

[22] 17 CFR 240.19b–4(f)(6)(iii).

[23] For purposes only of waiving the 30-day operative delay, the Commission has considered the proposed rule's impact on efficiency, competition, and capital formation. *See* 15 U.S.C. 78c(f).

IV. Solicitation of Comments

Interested persons are invited to submit written data, views, and arguments concerning the foregoing, including whether the proposed rule change is consistent with the Act. Comments may be submitted by any of the following methods:

Electronic Comments

- Use the Commission's Internet comment form (*http://www.sec.gov/rules/sro.shtml*); or
- Send an e-mail to *rule-comments@sec.gov.* Please include File Number SR–NYSEAmex–2011–50 on the subject line.

Paper Comments

- Send paper comments in triplicate to Elizabeth M. Murphy, Secretary, Securities and Exchange Commission, 100 F Street, NE., Washington DC 20549–1090.

All submissions should refer to File Number SR–NYSEAmex–2011–50. This file number should be included on the subject line if e-mail is used. To help the Commission process and review your comments more efficiently, please use only one method. The Commission will post all comments on the Commission's Internet Web site (*http://www.sec.gov/rules/sro.shtml*). Copies of the submission, all subsequent amendments, all written statements with respect to the proposed rule change that are filed with the Commission, and all written communications relating to the proposed rule change between the Commission and any person, other than those that may be withheld from the public in accordance with the provisions of 5 U.S.C. 552, will be available for Web site viewing and printing in the Commission's Public Reference Room, 100 F Street, NE., Washington, DC 20549, on official business days between the hours of 10 a.m. and 3 p.m. Copies of such filing also will be available for inspection and copying at the principal office of the Exchange. All comments received will be posted without change; the Commission does not edit personal identifying information from submissions. You should submit only information that you wish to make available publicly. All submissions should refer to File No. SR–NYSEAmex–2011–50 and should be submitted on or before August 22, 2011.

For the Commission, by the Division of Trading and Markets, pursuant to delegated authority.[24]

Elizabeth M. Murphy,

Secretary.

[FR Doc. 2011–19328 Filed 7–29–11; 8:45 am]

BILLING CODE 8011–01–P

[24] 17 CFR 200.30–3(a)(12).

SOCIAL SECURITY ADMINISTRATION

Agency Information Collection Activities: Proposed Request and Comment Request

The Social Security Administration (SSA) publishes a list of information collection packages requiring clearance by the Office of Management and Budget (OMB) in compliance with Public Law 104–13, the Paperwork Reduction Act of 1995, effective October 1, 1995. This notice includes revisions and an extension of OMB-approved information collections, and one request for a new information collection.

SSA is soliciting comments on the accuracy of the agency's burden estimate; the need for the information; its practical utility; ways to enhance its quality, utility, and clarity; and ways to minimize burden on respondents, including the use of automated collection techniques or other forms of information technology. Mail, email, or fax your comments and recommendations on the information collection(s) to the OMB Desk Officer and SSA Reports Clearance Officer at the following addresses or fax numbers.

(OMB), Office of Management and Budget, Attn: Desk Officer for SSA, Fax: 202–395–6974, E-mail address: *OIRA_Submission@omb.eop.gov.*

(SSA) Social Security Administration, DCBFM, Attn: Reports Clearance Officer, 1333 Annex Building, 6401 Security Blvd., Baltimore, MD 21235, Fax: 410–965–6400, E-mail address: *OPLM.RCO@ssa.gov.*

I. The information collection below is pending at SSA. SSA will submit it to OMB within 60 days from the date of this notice. To be sure we consider your comments, we must receive them no later than September 30, 2011. Individuals can obtain copies of the collection instrument by calling the SSA Reports Clearance Officer at 410–965–8783 or by writing to the above email address.

Report on Individual with Mental Impairment—20 CFR 404.1513 & 416.913—0960–0058. SSA uses Form SSA–824 to obtain medical evidence from medical sources who have treated a Social Security disability claimant for

a mental impairment. SSA uses the information from this form to establish whether a claimant filing for disability benefits has a mental impairment that meets the statutory definition of disability in accordance with the Social Security Act. The respondents are mental impairment treatment providers.

Type of Request: Extension of an OMB-approved information collection.

Type of respondents	Number of respondents	Frequency of response	Average burden per response (minutes)	Total annual burden (hours)
Private Sector	25,000	1	36	15,000
State Disability Determination Services (State/Local Government)	25,000	1	36	15,000
Totals	50,000			30,000

II. SSA submitted the information collections below to OMB for clearance. Your comments regarding the information collections would be most useful if OMB and SSA receive them within 30 days from the date of this publication. To be sure we consider your comments, we must receive them no later than August 31, 2011. Individuals can obtain copies of the OMB clearance packages by calling the SSA Reports Clearance Officer at 410–965–8783 or by writing to the above email address.

1. *Social Security's Public Credentialing and Authentication Process—20 CFR 401.45—0960–NEW.* Social Security is introducing a stronger citizen authentication process that will enable a new user to experience and access more electronic services.

Background

Authentication is the foundation for secure, online transactions. Identity authentication is the process of determining with confidence that people are who they claim to be during a remote, automated session. It comprises three distinct factors: something you know, something you have, and something you are. Single-factor authentication uses one of these factors, and multi-factor authentication uses two or more of these factors.

SSA's New Authentication Process

Social Security's new process features credential issuance, account management, and single- and multi-factor authentication. With this process, we are working toward offering consistent authentication across Social Security's secured online services, and eventually to Social Security's automated telephone services. We will allow our users to maintain one User ID, consisting of a self-selected Username and Password, to access multiple Social Security electronic services. This new process: (1) Enables the authentication of users of Social Security's sensitive electronic services; and (2) streamlines access to those services.

Social Security is developing a new authentication strategy that will:

- Issue a single User Identification (ID) for personal, business, and governmental transactions;
- Offer a variety of authentication options to meet the changing needs of the public;
- Partner with an external data provider to help us verify the identity of our online customers;
- Comply with relevant standards;
- Offer access to some of Social Security's more sensitive workloads online, while providing a high level of confidence in the identity of the person requesting access to these services;
- Offer an in-person process for those who are uncomfortable with or unable to use the Internet registration process; and
- Balance security with ease of use.

New Authentication Process Features

SSA's new process will include the following key components: (1) Registration and identity verification; (2) enhancement of the User ID; and (3) authentication. The registration process is a one-time activity for the respondents. The respondent provides some personal information, and we use this to verify respondent identity. Respondents then select their User ID (Username & Password). Respondents will log in with this User ID each time they access SSA's online services. SSA will also allow respondents to increase the security of their credential by adding a second authentication factor.

Information SSA Will Request As Part of the Process

SSA will ask for respondents' personal information, which may include:

- Name
- Social Security number (SSN)
- Date of Birth
- Address—mailing and residential
- Telephone number
- Email address
- Financial information
- Cell phone number
- Responses to an identity quiz (multiple choice format questions keyed to specific data identity thieves will not be able to answer)
- Password reset questions

This collection of information, or a subset of it, is required for respondents who want to conduct business with Social Security via the Internet or our automated 800 number. We will collect this information via the Internet on SSA's public-facing website. We also offer an in-person identification verification process for individuals who cannot or are not willing to register online. We do not ask for financial information with the in-person process. In addition, if individuals opt for the enhanced or upgraded account, they will also receive a text message on their cell phones (this serves as the second factor for authentication) each time they log into SSA's online services.

Advantages of the New Authentication Strategy

This new authentication strategy will provide a user-friendly way for the public to conduct extended business with Social Security online instead of visiting the local servicing office or requesting information over the phone. Individuals will have real-time access to their sensitive Social Security information in a safe and secured web environment.

Burden Information

The respondents for this information collection request are individuals who choose to use the Internet or Automated Telephone Response System to conduct business with SSA.

Type of Request: Request for a new information collection.

Modality of completion	Number of respondents	Frequency of response	Average burden per response (minutes)	Total annual burden hours (hours)
Internet Requestors	17,900,000	1	8	2,386,667
In-Person (Intranet) Requestors	5,800,000	1	8	773,333
Totals	23,700,000			3,160,000

2. *Marriage Certification—20 CFR 404.725—0960–0009.* SSA uses Form SSA–3 to determine if a spouse claimant has the necessary relationship to the SSN holder (i.e., the worker) to qualify for the worker's Title II benefits. The respondents are applicants for spouse's benefits. This is a correction notice. SSA published this information collection as an extension on May 26, 2011 at 76 FR 30749. Since we are revising the Privacy Act Statement, this is now a revision of an OMB-approved information collection.

Type of Request: Revision of an OMB-approved information collection.

Number of Respondents: 180,000.

Frequency of Response: 1.

Average Burden Per Response: 5 minutes.

Estimated Annual Burden: 15,000 hours.

3. *Statement Regarding Date of Birth and Citizenship—20CFR 404.716—0960–0016.* When individuals apply for Social Security benefits and cannot provide preferred methods of proving age or citizenship, SSA uses Form SSA–702 to establish these facts. Specifically, SSA uses the SSA–702 to establish age as a factor of entitlement to Social Security benefits, or U.S. citizenship as a payment factor. Respondents are individuals with knowledge about the date of birth or citizenship of applicants filing for one or more Social Security benefits who need to establish age or citizenship.

Type of Request: Revision of an OMB-approved information collection.

Number of Respondents: 1,200.

Frequency of Response: 1.

Average Burden per Response: 10 minutes.

Estimated Annual Burden: 200.

Dated: July 27, 2011.

Faye Lipsky,

Reports Clearance Officer, Center for Reports Clearance, Social Security Administration.

[FR Doc. 2011–19406 Filed 7–29–11; 8:45 am]

BILLING CODE 4191–02–P

DEPARTMENT OF TRANSPORTATION

Pipeline and Hazardous Materials Safety Administration

[Docket No. PHMSA–2011–0178]

Pipeline Safety: Information Collection Activities

AGENCY: Pipeline and Hazardous Materials Safety Administration (PHMSA), DOT.

ACTION: Notice and request for comments.

SUMMARY: In accordance with the Paperwork Reduction Act of 1995, PHMSA invites comments on certain information collections pertaining to pipeline safety for which PHMSA intends to request renewal from the Office of Management and Budget (OMB).

DATES: Interested persons are invited to submit comments on or before September 30, 2011.

ADDRESSES: Comments may be submitted in the following ways:

E-Gov Web Site: http://www.regulations.gov. This site allows the public to enter comments on any **Federal Register** notice issued by any agency.

Fax: 1–202–493–2251.

Mail: Docket Management Facility; U.S. Department of Transportation, 1200 New Jersey Avenue, SE., West Building, Room W12–140, Washington, DC 20590–0001.

Hand Delivery: Room W12–140 on the ground level of the West Building, 1200 New Jersey Avenue, SE., Washington, DC, between 9 a.m. and 5 p.m., Monday through Friday, except Federal holidays.

Instructions: Identify the docket number, PHMSA–2011–0178, at the beginning of your comments. Note that all comments received will be posted without change to *http://www.regulations.gov,* including any personal information provided. You should know that anyone is able to search the electronic form of all comments received into any of our dockets by the name of the individual submitting the comment (or signing the comment, if submitted on behalf of an association, business, labor union, etc.). Therefore, you may want to review DOT's complete Privacy Act Statement in the **Federal Register** published on April 11, 2000 (65 FR 19477) or visit *http://www.regulations.gov* before submitting any such comments.

Docket: For access to the docket or to read background documents or comments, go to *http://www.regulations.gov* at any time or to Room W12–140 on the ground level of the West Building, 1200 New Jersey Avenue, SE., Washington, DC, between 9 a.m. and 5 p.m., Monday through Friday, except Federal holidays. If you wish to receive confirmation of receipt of your written comments, please include a self-addressed, stamped postcard with the following statement: ''Comments on PHMSA–2011–0178.'' The Docket Clerk will date stamp the postcard prior to returning it to you via the U.S. mail. Please note that due to delays in the delivery of U.S. mail to Federal offices in Washington, DC, we recommend that persons consider an alternative method (Internet, fax, or professional delivery service) of submitting comments to the docket and ensuring their timely receipt at DOT.

FOR FURTHER INFORMATION CONTACT: Angela Dow by telephone at 202–366–1246, by fax at 202–366–4566, or by mail at U.S. Department of Transportation, Pipeline and Hazardous Materials Safety Administration, 1200 New Jersey Avenue, SE., PHP–30, Washington, DC 20590–0001.

SUPPLEMENTARY INFORMATION: Section 1320.8(d), Title 5, Code of Federal Regulations, requires PHMSA to provide interested members of the public and affected agencies an opportunity to comment on information collection and recordkeeping requests. This notice identifies several information collection requests that PHMSA will be submitting to OMB for renewal. The following information is provided for each information collection: (1) Title of the information collection; (2) OMB control number; (3) Current expiration date; (4) Type of request; (5) Abstract of the information collection activity; (6) Description of affected public; (7) Estimate of total annual reporting and recordkeeping burden; and (8) Frequency of collection. PHMSA will

request a three-year term of approval for each information collection activity. PHMSA requests comments on the following information collections:

Title: Requirements for Liquefied Natural Gas (LNG) Facilities.

OMB Control Number: 2137–0048.

Current Expiration Date: 1/31/2012.

Abstract: Operators of liquefied natural gas facilities are required under 49 CFR part 193 to maintain records, make reports, and provide information to PHMSA and State pipeline safety agencies concerning the operations of their facilities. The information aids Federal and state pipeline safety inspectors in conducting compliance inspections and investigating incidents.

Affected Public: Operators of Liquefied Natural Gas Facilities.

Annual Reporting and Recordkeeping Burden:

Total Annual Responses: 101.
Total Annual Burden Hours: 12,120.
Frequency of Collection: On Occasion.

Title: Record Keeping for Natural Gas Pipeline Operators.

OMB Control Number: 2137–0049.

Current Expiration Date: 1/31/2012.

Abstract: Operators of gas pipelines are required under 49 CFR part 192 to maintain records, make reports, and provide information to PHMSA and State pipeline safety agencies concerning the operations of their pipelines. The information aids Federal and state pipeline safety inspectors in conducting compliance inspections and investigating incidents.

Affected Public: Operators of Natural Gas Pipeline Systems.

Annual Reporting and Recordkeeping Burden:

Total Annual Responses: 2,300.
Total Annual Burden Hours: 940,454.
Frequency of collection: On occasion.

Title: Pipeline Safety: Excess Flow Valves—Customer Notification.

OMB Control Number: 2137–0593.

Current Expiration Date: 1/31/2012.

Abstract: Pipeline operators are required to provide notifications about excess flow valves to service line customers as described in § 192.383. Upon request, an operator must make documentation of compliance available to PHMSA or the appropriate state regulatory agency.

Affected Public: Pipeline Operators.

Annual Reporting and Recordkeeping Burden:

Total Annual Responses: 900,000.
Total Annual Burden Hours: 18,000.
Frequency of collection: On Occasion.

Title: Customer Owned Service Lines.

OMB Control Number: 2137–0594.

Current Expiration Date: 1/31/2012.

Abstract: Operators of gas service lines who do not maintain certain buried piping on behalf of their customers must provide notification about maintenance to those customers (§ 192.16). Upon request, an operator must make documentation of compliance available to PHMSA or the appropriate state regulatory agency.

Affected Public: Natural Gas Pipeline Operators.

Annual Reporting and Recordkeeping Burden:

Total Annual Responses: 550, 000.
Total Annual Burden Hours: 9,167.
Frequency of collection: On Occasion.

Title: Pipeline Safety: Qualification of Pipeline Safety, Training.

OMB Control Number: 2137–0600.

Current Expiration Date: 2/29/2012.

Abstract: Pipeline operators are required to have continuing programs for qualifying and training personnel performing safety-sensitive functions on pipelines. (49 CFR part 192, Subpart N and 49 CFR part 195, Subpart G). Operators must maintain records, make reports, and provide information to PHMSA and state pipeline safety agencies concerning these programs. The information aids Federal and state pipeline safety inspectors in conducting compliance inspections and investigating incidents.

Affected Public: Pipeline Operators.

Annual Reporting and Recordkeeping Burden:

Total Annual Responses: 22,300.
Total Annual Burden Hours: 466,667.
Frequency of collection: On Occasion.

Title: Pipeline Safety: Report of Abandoned Underwater Pipelines.

OMB Control Number: 2137–0601.

Current Expiration Date: 2/29/2012.

Abstract: Pipeline operators are required to report certain information about abandoned underwater pipelines to PHMSA (§ 195.59 and § 192.727). The information aids Federal and state pipeline safety inspectors in conducting compliance inspections and investigating incidents.

Affected Public: Operators of Underwater Pipelines.

Annual Reporting and Recordkeeping Burden:

Annual Responses: 10.
Annual Burden Hours: 60.
Frequency of collection: On Occasion.

Title: Pipeline Safety: Integrity Management in High Consequence Areas for Operators with more than 500 Miles of Hazardous Liquid Pipelines.

OMB Control Number: 2137–0604.

Current Expiration Date: 1/31/2012

Abstract: Hazardous liquid operators with pipelines in high consequence areas (*i.e.,* commercially navigable waterways, high population areas, other populated areas, and unusually sensitive areas as defined in § 195.450) are subject to certain information collection requirements relative to the Integrity Management Program provisions of § 195.452.

Affected Public: Pipeline operators with more than 500 miles of hazardous liquid pipeline located in high consequence areas.

Annual Reporting and Recordkeeping Burden:

Annual Responses: 71.

Annual Burden Hours: 57,510.

Frequency of collection: On Occasion.

Title: Pipeline Safety: Integrity Management in High Consequence Areas for Operators with Less than 500 Miles of Hazardous Liquid Pipeline.

OMB Control Number: 2137–0605.

Current Expiration Date: 1/31/2012.

Abstract: Hazardous liquid operators with pipelines in high consequence areas (*i.e.,* commercially navigable waterways, high population areas, other populated areas, and unusually sensitive areas as defined in § 195.450) are subject to certain information collection requirements relative to the Integrity Management Program provisions of § 195.452.

Affected Public: Pipeline operators with less than 500 miles of hazardous liquid pipeline located in high consequence areas.

Annual Reporting and Recordkeeping Burden:

Annual Responses: 132.

Annual Burden Hours: 267,960.

Frequency of collection: On Occasion.

Comments are invited on:

(a) The need for the proposed collection of information for the proper performance of the functions of the agency, including whether the information will have practical utility;

(b) The accuracy of the agency's estimate of the burden of the proposed collection of information, including the validity of the methodology and assumptions used;

(c) Ways to enhance the quality, utility, and clarity of the information to be collected; and

(d) Ways to minimize the burden of the collection of information on those who are to respond, including the use of appropriate automated, electronic, mechanical, or other technological collection techniques.

Issued in Washington, DC, on July 27, 2011.

Alan K. Mayberry,

Deputy Associate Administrator for Field Operations.

[FR Doc. 2011–19383 Filed 7–29–11; 8:45 am]

BILLING CODE 4910–60–P

DEPARTMENT OF THE TREASURY

Submission for OMB Review; Comment Request

ACTION: Notice; Correction.

SUMMARY: The Department of the Treasury published a document in the **Federal Register** on July 22, 2011, inviting comments on collections of information submitted to the Office of Management and Budget (OMB) for review. This document contained an incorrect reference.

Correction

In the **Federal Register** of July 22, 2011, in FR Doc. 2011–18536, make the following correction:

• page 44084, in the third column, under *OMB Number:* 1510–0014: replace ''1510–0014'' with ''1510–0004''.

Dated: July 27, 2011.

Dawn D. Wolfgang,

Treasury PRA Clearance Officer.

[FR Doc. 2011–19344 Filed 7–29–11; 8:45 am]

BILLING CODE 4810–35–P

DEPARTMENT OF THE TREASURY

Internal Revenue Service

Proposed Collection; Comment Request for Form W–10

AGENCY: Internal Revenue Service (IRS), Treasury.

ACTION: Notice and request for comments.

SUMMARY: The Department of the Treasury, as part of its continuing effort to reduce paperwork and respondent burden, invites the general public and other Federal agencies to take this opportunity to comment on proposed and/or continuing information collections, as required by the Paperwork Reduction Act of 1995, Public Law 104–13 (44 U.S.C. 3506(c)(2)(A)). Currently, the IRS is soliciting comments concerning Form W–10, Dependent Care Provider's Identification and Certification.

DATES: Written comments should be received on or before September 30, 2011 to be assured of consideration.

ADDRESSES: Direct all written comments to Yvette B. Lawrence, Internal Revenue Service, room 6129, 1111 Constitution Avenue, NW., Washington, DC 20224.

FOR FURTHER INFORMATION CONTACT: Requests for additional information or copies of the form and instructions should be directed to Evelyn J. Mack, (202) 622–7381, at Internal Revenue Service, room 6231, 1111 Constitution Avenue, NW., Washington, DC 20224, or through the Internet at *Evelyn.J.Mack@irs.gov.*

SUPPLEMENTARY INFORMATION:

Title: Dependent Care Provider's Identification and Certification.

OMB Number: 1545–XXXX.

Form Number: Form W–10.

Abstract: The proposed collection of information is necessary for the taxpayer to file information about the caretaker of a child or other dependent when a tax credit on a return is claimed or when benefits from a dependent care assistance program is received. Taxpayers are required to obtain the name and address of the dependent care provider, the provider's taxpayer identification number, and a certification from the dependent care provider that the name, address and taxpayer identification number on the form are correct.

Current Actions: This form is being submitted for OMB approval.

Type of Review: Approval of a currently used collection.

Affected Public: Individuals or households, business or other for-profit organizations, and not-for-profit institutions.

Estimated Number of Respondents: 39,354.

Estimated Time Per Respondent: 1 hour 53 minutes.

Estimated Total Annual Burden Hours: 74,773.

The following paragraph applies to all of the collections of information covered by this notice:

An agency may not conduct or sponsor, and a person is not required to respond to, a collection of information unless the collection of information displays a valid OMB control number. Books or records relating to a collection of information must be retained as long as their contents may become material in the administration of any internal revenue law. Generally, tax returns and tax return information are confidential, as required by 26 U.S.C. 6103.

Request For Comments: Comments submitted in response to this notice will be summarized and/or included in the request for OMB approval. All comments will become a matter of public record. Comments are invited on: (a) Whether the collection of information is necessary for the proper performance of the functions of the agency, including whether the information shall have practical utility; (b) the accuracy of the agency's estimate of the burden of the collection of information; (c) ways to enhance the quality, utility, and clarity of the information to be collected; (d) ways to minimize the burden of the collection of information on respondents, including through the use of automated collection techniques or other forms of information technology; and (e) estimates of capital or start-up costs and costs of operation, maintenance, and purchase of services to provide information.

Approved: July 21, 2011.

Yvette Lawrence,

IRS Reports Clearance Officer.

[FR Doc. 2011–19398 Filed 7–29–11; 8:45 am]

BILLING CODE 4830–01–P

FEDERAL REGISTER

Vol. 76 Monday,

No. 147 August 1, 2011

Part II

Department of Homeland Security

Coast Guard

46 CFR Parts 1, 10, 11 et al.

Implementation of the Amendments to the International Convention on Standards of Training, Certification and Watchkeeping for Seafarers, 1978, and Changes to Domestic Endorsements; Proposed Rule

DEPARTMENT OF HOMELAND SECURITY

Coast Guard

46 CFR Parts 1, 10, 11, 12, 13, 14, and 15

[Docket No. USCG–2004–17914]

RIN 1625–AA16

Implementation of the Amendments to the International Convention on Standards of Training, Certification and Watchkeeping for Seafarers, 1978, and Changes to Domestic Endorsements.

AGENCY: Coast Guard, DHS.

ACTION: Supplemental notice of proposed rulemaking; notice of public meetings.

SUMMARY: The Coast Guard proposes to amend the existing regulations that implement the International Convention on Standards of Training, Certification and Watchkeeping for Seafarers, 1978, as amended (STCW Convention), as well as the Seafarer's Training, Certification and Watchkeeping Code (STCW Code). The changes proposed in this Supplemental Notice of Proposed Rulemaking (SNPRM) address the comments received from the public response to the Notice of Proposed Rulemaking (NPRM), in most cases through revisions based on those comments, and propose to incorporate the 2010 amendments to the STCW Convention that will come into force on January 1, 2012. In addition, this SNPRM proposes to make other non-STCW changes necessary to reorganize, clarify, and update these regulations.

DATES: Comments and related material must either be submitted to our online docket via *http://www.regulations.gov* on or before September 30, 2011 or reach the Docket Management Facility by that date. Comments sent to the Office of Management and Budget (OMB) on collection of information must reach OMB on or before September 30, 2011.

ADDRESSES: You may submit comments identified by docket number USCG–2004–17914 using any one of the following methods:

(1) *Federal eRulemaking Portal: http://www.regulations.gov.*

(2) *Fax:* 202–493–2251.

(3) *Mail:* Docket Management Facility (M–30), U.S. Department of Transportation, West Building Ground Floor, Room W12–140, 1200 New Jersey Avenue SE., Washington, DC 20590–0001.

(4) *Hand delivery:* Same as mail address above, between 9 a.m. and 5 p.m., Monday through Friday, except Federal holidays. The telephone number is 202–366–9329.

To avoid duplication, please use only one of these four methods. See the ''Public Participation and Request for Comments'' portion of the **SUPPLEMENTARY INFORMATION** section below for instructions on submitting comments.

Collection of Information Comments: If you have comments on the collection of information discussed in section VIII.D of this NPRM, you must also send comments to the Office of Information and Regulatory Affairs (OIRA), Office of Management and Budget. To ensure that your comments to OIRA are received on time, the preferred methods are by e-mail to *oira_submission@omb.eop.gov* (include the docket number and ''Attention: Desk Officer for Coast Guard, DHS'' in the subject line of the e-mail) or fax at 202–395–6566. An alternate, though slower, method is by U.S. mail to the Office of Information and Regulatory Affairs, Office of Management and Budget, 725 17th Street NW., Washington, DC 20503, ATTN: Desk Officer, U.S. Coast Guard.

Viewing incorporation by reference material: You may inspect the material proposed for incorporation by reference at room 1210, U.S. Coast Guard Headquarters, 2100 Second Street SW., Washington, DC 20593–0001 between 8 a.m. and 4 p.m., Monday through Friday, except Federal holidays. The telephone number is 202–372–1401. Copies of the material are available as indicated in the ''Incorporation by Reference'' section of this preamble.

FOR FURTHER INFORMATION CONTACT: If you have questions on this proposed rule, call or e-mail Ms. Zoe Goss, Maritime Personnel Qualifications Division, Coast Guard; telephone 202–372–1425, e-mail Zoe.A.Goss@uscg.mil. If you have questions on viewing or submitting material to the docket, call Renee V. Wright, Program Manager, Docket Operations, telephone 202–366–9826.

SUPPLEMENTARY INFORMATION:

Table of Contents for Preamble

I. Public Participation and Request for Comments
A. Submitting Comments
B. Viewing Comments and Documents
C. Privacy Act
D. Public Meeting
II. Abbreviations
III. Regulatory History
IV. Basis and Purpose
V. Background
VI. Discussion of Proposed Rule
A. Overview
B. Differences Between This SNPRM and the Coast Guard's Current Regulations
C. Table of Proposed Changes
D. Part 12 Re-Numbering
VII. Discussion of Comments on the NPRM
VIII. Incorporation by Reference
IX. Regulatory Analyses
A. Regulatory Planning and Review
B. Small Entities
C. Assistance for Small Entities
D. Collection of Information
E. Federalism
F. Unfunded Mandates Reform Act
G. Taking of Private Property
H. Civil Justice Reform
I. Protection of Children
J. Indian Tribal Governments
K. Energy Effects
L. Technical Standards
M. Environment

I. Public Participation and Request for Comments

We encourage you to participate in this rulemaking by submitting comments and related materials. All comments received will be posted without change to *http://www.regulations.gov* and will include any personal information you have provided.

A. Submitting Comments

If you submit a comment, please include the docket number for this rulemaking (USCG–2004–17914), indicate the specific section of this document to which each comment applies, and provide a reason for each suggestion or recommendation. You may submit your comments and material online or by fax, mail, or hand delivery, but please use only one of these means. We recommend that you include your name and a mailing address, an e-mail address, or a phone number in the body of your document so that we can contact you if we have questions regarding your submission.

To submit your comment online, go to *http://www.regulations.gov,* click on the ''submit a comment'' box, which will then become highlighted in blue. In the ''Document Type'' drop down menu select ''Proposed Rule'' and insert ''USCG–2004–17914'' in the ''Keyword'' box. Click ''Search'' then click on the balloon shape in the ''Actions'' column. If you submit your comments by mail or hand delivery, submit them in an unbound format, no larger than 8½; by 11 inches, suitable for copying and electronic filing. If you submit comments by mail and would like to know that they reached the Facility, please enclose a stamped, self-addressed postcard or envelope.

We will consider all comments and material received during the comment

period and may change this proposed rule based on your comments.

B. Additional Request for Comments

In addition to encouraging your comments on all of the proposals within this rulemaking, the Coast Guard seeks specific comment on the issues outlined below:

1. The value of tonnage and route restrictions for engineer endorsements. Current regulations restrict Designated Duty Engineers (DDEs) with 1,000 horsepower (HP) and 4,000 HP limits to inland and near-coastal waters, and all DDEs to 500 gross register tons (GRT) vessels. Also, the limited series of engineer credentials authorize service on vessels less than 1,600 GRT/3,000 gross tonnage (GT), with two classes of chief engineer, one of which authorizes sailing only on near-coastal waters. The Coast Guard seeks comment from the public regarding the possible elimination or retention of these tonnage and route restrictions.

2. Alternative or additional requirements for limiting engineer authority, such as maintaining current horsepower limits, adding equipment restrictions, or any other alternative requirements.

3. Potential changes to the qualification requirements for a Designated Examiner (DE) for Towing Officer's Assessment Record (TOARs) to allow mariners to serve as DEs by virtue of their endorsement without any further approval process.

4. Who, within the mariner population, will take advantage of the alternatives provided to meet the standards of competence, besides formal training, for an STCW endorsement.

5. The extent to which changes to sea service requirements, particularly in § 10.232, will increase the availability of mariners for service on ocean-going ships.

6. Possible changes to fee payment options, as proposed in § 10.219, which would eliminate the ability to pay by cash or check.

C. Viewing Comments and Documents

To view comments, as well as documents mentioned in this preamble as being available in the docket, go to *http://www.regulations.gov,* click on the ''read comments'' box, which will then become highlighted in blue. In the ''Keyword'' box insert ''USCG–2004–17914'' and click ''Search.'' Click the ''Open Docket Folder'' in the ''Actions'' column. If you do not have access to the internet, you may view the docket online by visiting the Docket Management Facility in Room W12–140 on the ground floor of the Department of Transportation West Building, 1200 New Jersey Avenue SE., Washington, DC 20590, between 9 a.m. and 5 p.m., Monday through Friday, except Federal holidays. We have an agreement with the Department of Transportation to use the Docket Management Facility.

D. Privacy Act

Anyone can search the electronic form of comments received into any of our dockets by the name of the individual submitting the comment (or signing the comment, if submitted on behalf of an association, business, labor union, etc.). You may review a Privacy Act notice regarding our public dockets in the January 17, 2008, issue of the **Federal Register** (73 FR 3316).

E. Public Meeting

We plan to hold public meetings in Miami, New Orleans, Seattle, and Washington, DC.

We will be providing the dates, times, and exact locations of those meetings by later **Federal Register** notice.

II. Abbreviations

A/B Able Seaman
ARPA Automatic Radar Plotting Aid
ATB Articulated Tug Barge
BCO Ballast Control Operator
BRM Bridge Resource Management
BS Barge Supervisor
BST Basic Safety Training
CFR Code of Federal Regulations
COI Certificate of Inspection
COLREGS International Regulations for Preventing Collisions at Sea
CPR Cardio-Pulmonary Resuscitation
DC Damage Control
DDE Designated Duty Engineer
DE Designated Examiner
DL Dangerous Liquid
DOT Department of Transportation
ECDIS Electronic Chart Display Information System
EEZ Exclusive Economic Zone
ERM Engine Room Resource Management
FCC Federal Communications Commission
F.H. Food Handler
FR **Federal Register**
GMDSS Global Maritime Distress and Safety System
GRT Gross Register Tons
GT Gross Tonnage
HP Horsepower
IMDG The International Maritime Dangerous Goods Code
IMO International Maritime Organization
IR Interim Rule
IRFA Initial Regulatory Flexibility Act
ISM International Safety Management Code
ISO International Organization for Standardization
ISPS International Ship and Port Facility Security
ITB Integrated Tug Barge
ITC International Tonnage Convention on Tonnage Measurement of Ships, 1969
KUP Knowledge, Understanding, and Proficiency
kW Kilowatts
LG Liquefied Gas
MARAD Maritime Administration
MARPOL 73/78 International Convention for the Prevention of Pollution From Ships, 1973 as modified by the Protocol of 1978
MERPAC Merchant Marine Personnel Advisory Committee
MMC Merchant Mariner Credential
MMD Merchant Mariner Document
MODU Mobile Offshore Drilling Unit
NAVSAC Navigation Safety Advisory Committee
NDR National Driver Register
NMC U.S. Coast Guard National Maritime Center
NEPA National Environment Policy Act of 1969
NPRM Notice of Proposed Rulemaking
NVIC Navigation and Vessel Inspection Circular
OCMI Officer in Charge, Marine Inspection
OICEW Officer in Charge of an Engineering Watch
OICNW Officer in Charge of a Navigational Watch
OIM Offshore Installation Manager
OIRA Office of Information and Regulatory Affairs
OJT On-the-job training
OMB Office of Management and Budget
OSV Offshore Supply Vessel
OUPV Operator of an Uninspected Passenger Vessel
PIC Person in Charge
PMS Preventive Maintenance System
PSC Proficiency in Survival Craft
QA Qualified Assessor
QMED Qualified Member of the Engineering Department
QSS Quality Standard Systems
REC Regional Examination Center
RFA Regulatory Flexibility Act
RFPEW Ratings Forming Part of an Engineering Watch
RFPNW Ratings Forming Part of a Navigational Watch
SHIP Seafarers' Health Improvement Program
SOLAS The International Convention for the Safety of Life at Sea (1974)
STCW Code Seafarer's Training, Certification and Watchkeeping Code
STCW Convention International Convention on Standards of Training, Certification, and Watchkeeping for Seafarers, 1978, as amended
STCW–F International Convention on Standards of Training, Certification, and Watchkeeping for Fishing Vessel Personnel
TOAR Towing Officer's Assessment Record
TRB Training Record Book
TSA Transportation Security Administration
TSAC Towing Safety Advisory Committee
UPV Uninspected Passenger Vessel
UTV Uninspected Towing Vessel
VSO Vessel Security Officer

III. Regulatory History

The Coast Guard first published changes to the regulations governing the credentialing of merchant mariners serving on U.S. flag vessels with an Interim Rule (IR) on June 26, 1997 (62 FR 34505). The 1997 IR ensured that

U.S. merchant mariner credentials would meet IMO standards, thereby reducing the possibility of U.S. ships being detained in a foreign port for non-compliance.

In 2009, The Coast Guard proposed to update the changes made by the 1997 IR through experience gained during the implementation of that rule. To that end, the Coast Guard published a Notice of Proposed Rulemaking (NPRM) on November 17, 2009 (74 FR 59354). The proposed rule sought to incorporate all effective amendments as of that publication date to the STCW Convention and Code. The Coast Guard determined, as a result of comments from the public and federal advisory committees (specifically the Merchant Marine Personnel Advisory Committee (MERPAC)), that more information, including more detailed regulatory text, was required for the affected public, and incorporated those comments as proposals within the NPRM.

Five public meetings were held to receive comments on the NPRM. These meetings were announced in the **Federal Register** on November 18, 2009 (74 FR 59502). The comments received during these five meetings are discussed in the ''Discussion of Comments on the NPRM'' section of this preamble.

IV. Basis and Purpose

The Coast Guard has identified two basic concerns with the existing mariner credentialing regulations that it intends to remedy with this supplemental proposal. First, the existing regulations, which combine domestic and international requirements, are confusing to mariners and others in the maritime industry. Second, in June 2010 the International Maritime Organization (IMO) amended the International Convention on Standards of Training, Certification and Watchkeeping for Seafarers (STCW), 1978. This proposal intends to clarify the Coast Guard's domestic and international mariner license endorsement regulations, and implement provisions related to the amended STCW Convention.

The International Convention on Standards of Training, Certification and Watchkeeping for Seafarers, 1978 as amended, sets forth minimum training and demonstrations of proficiency requirements for merchant mariners. The IMO adopted amendments to the STCW in 1995. Those amendments entered into force on February 1, 1997. In 2007, the IMO embarked on a comprehensive review of the entire STCW Convention and STCW Code, which sets forth provisions for implementing provisions from the STCW Convention. Five meetings were held at IMO headquarters in London on the comprehensive review, and the Parties developed draft 2010 amendments to the Convention. The Parties adopted these amendments on June 25, 2010, at the STCW Diplomatic Conference in Manila, Philippines. They will enter into force for all ratifying countries on January 1, 2012. Because these amendments were not adopted until after the previous NPRM was published, they were not included in the NPRM's proposals.

The Coast Guard is publishing this Supplemental Notice of Proposed Rulemaking (SNPRM) to implement amendments to the STCW, including the 2010 amendments, and ensure that the U.S. is meeting its obligations under the Convention. The Coast Guard considered issuing a Final Rule implementing the 1995 amendments before issuing these proposals but determined it would be less confusing to the mariner to combine into one rule the lessons learned from the implementation of the 1995 amendments and the 2010 amendments.

In addition, the Coast Guard is issuing the SNPRM to respond to the comments, feedback, and concerns received from the public as a result of the NPRM. In order to address those comments and concerns, the SNPRM will: simplify domestic licensing requirements and separate them from STCW requirements; provide alternative means for demonstrating competence; clarify oversight requirements for approved courses; amend lifeboatmen requirements; allow for acceptance of sea service on vessels serving the Great Lakes and inland waters to meet STCW requirements; and permit acceptance of maritime academies' documentation in compliance with national accreditation bodies to meet STCW requirements. The SNPRM will also give the public an opportunity to comment on these changes.

V. Background

In 2007, the IMO embarked on a comprehensive review of the entire STCW Convention and STCW Code. The Coast Guard held public meetings prior to each one of the IMO meetings in London for the review to determine what positions U.S. delegations should advocate and to exchange views about amendments to STCW that were under discussion. In addition, the Coast Guard also took advantage of advisory committee meetings, specifically MERPAC, to discuss developments and implementation of the requirements relating to the 2010 amendments. The 2010 amendments resulting from that review were adopted on June 25, 2010.

The Convention is not self-implementing; therefore, the United States, as a signatory to the STCW Convention, must initiate regulatory changes to ensure full implementation of all amendments to the STCW Convention and STCW Code. The United States implements these provisions under the Convention and under the authority of United States domestic laws at United States Code titles 5, 14, 33 and 46, as cited with the proposed rule text under ''Authorities.''

Parties to the STCW Convention have port state control authority to detain vessels that do not appear to be in compliance with the Convention. If U.S. regulations are non-compliant with the STCW Convention and STCW Code, there is a risk that U.S. ships will be detained in foreign ports by member nations and that U.S. mariners would not be able to seek employment on foreign flag vessels.

VI. Discussion of Proposed Rule

A. Overview

This proposed rule is a result of ongoing work to ensure that U.S. mariners comply with the standards set forth in the STCW Convention and Code and to clarify and update the regulations of 46 CFR Subchapter B. In responding to the comments, feedback, and concerns received from the public as a result of the 2009 NPRM, and due to the adoption of the 2010 amendments to the STCW Convention and STCW Code, the Coast Guard recognized a need to make substantial changes to the merchant mariner licensing and documentation credentialing program. Because of these substantial changes, we recognize the necessity of developing a more comprehensive rule, and of providing additional opportunity—through this SNPRM—for the public to comment on these changes.

Most seagoing merchant mariners must comply with the requirements of the STCW Convention and STCW Code. The Coast Guard recognizes that the CFR regulations implementing the STCW Convention and STCW Code requirements have been the subject of different interpretations and that the requirements reflected in the CFR are not currently organized in a manner that is easy to read and understand. This SNPRM seeks to implement all of the provisions in the STCW Convention by taking full advantage of the flexibilities incorporated in the STCW Convention and of the robustness of an existing domestic licensing scheme, without compromising the safety, security and protection of mariners or the marine environment.

This SNPRM also seeks to revise other sections of 46 CFR Subchapter B in order to clarify, address omissions in, and update these regulations.

B. Differences Between This SNPRM and the Coast Guard's Current Regulations

This list provides a brief summary of the significant changes proposed in this SNPRM. The ''Table of Proposed Changes'' in part C of this section provides more detailed information and explanation of the key changes in the summarized listing below.

1. Separation of STCW and Domestic Endorsements

The Coast Guard proposes to clearly separate the two licensing schemes for STCW and domestic endorsements. For STCW endorsements, this proposed rule incorporates the sea service, assessment and training requirements directly from the STCW Convention and STCW Code to ensure consistency and clarity. In addition, the Coast Guard has provided entry paths from domestic endorsements to the equivalent STCW endorsement. These proposed changes would make it easier for mariners to read and understand the requirements for each Merchant Mariner Credential (MMC) STCW endorsement.

2. Methods for Demonstrating Competence

The Coast Guard proposes to accept various methods for assessment of competence as provided in the Tables of Competence in the STCW Code. This would allow the preservation of the ''hawsepipe'' program, which permits the use of on-the-job training (OJT) or practical experience, to obtain endorsements, and would foster career paths that were not previously available.

Implementation of an assessment-based process would provide acceptance of the various methods for demonstrating competence, including, but not limited to: (1) On-the-job training and/or in-service experience; (2) formal training (classroom or distance-learning), including laboratory assessment; and (3) simulator training. The complete list of acceptable methods of demonstrating competence can be found in proposed §§ 11.301, 12.601, and 13.601 accordingly.

3. Sea Service Credit for Great Lakes and Inland Mariners

The Coast Guard proposes to add provisions to grant sea service credit towards STCW and domestic endorsements of unlimited tonnage for those mariners who provide proof of service on the Great Lakes or inland waters. A large portion of the skills and assessments that the STCW Code requires for its endorsements overlaps with the skills and techniques these officers are currently using as deck and engineer officers on the Great Lakes or inland waters. Applicants serving on Great Lakes waters will receive day-for-day credit. Applicants serving on inland waters will be credited 1 day of ocean service for every 2 days of inland service for up to 50 percent of the total required service. The reason for the difference in service credit is based on the fact that Great Lakes service most closely resembles the length, breadth, equipment, and operation of ocean service.

4. Medical Examinations and Endorsements

The Coast Guard proposes to add provisions regarding the issuance of medical endorsements for mariners to improve maritime safety and provide consistency with the 2010 STCW amendments. Medical endorsements issued to a mariner serving under the authority of an STCW endorsement would be issued for a maximum period of 2 years unless the mariner is under the age of 18, in which case the maximum period of validity would be 1 year, as stipulated in the 2010 amendments to the STCW Convention. Medical endorsements issued to a mariner who is serving as a first-class pilot, or acting as a pilot under § 15.812, would be issued for a maximum period of 1 year consistent with the already implemented requirement for a first-class pilot to complete an annual medical exam. All other mariners would be issued a medical certificate/endorsement valid for a maximum period of 5 years, consistent with the current practice and requirements.

The Coast Guard proposes to revise the physical requirements for mariners applying for domestic and STCW credentials issued by the Coast Guard. These proposed changes include: annual submission of physical examination results by pilots, removal of some specific tests for color vision, revision of vision standards, revision of hearing standards, and clarification regarding demonstration of physical ability. These changes would provide the Coast Guard some flexibility in the acceptance of other tests, as well as serve as acknowledgement that some of the vision tests are no longer available. They would enable mariners and examining physicians to use a range of effective tests to demonstrate physical competence, rather than limit them to specific tests which may have become outdated or unavailable. They also implement the STCW requirement that mariners seeking an STCW endorsement demonstrate physical ability.

In particular, the Coast Guard proposes to revise the vision standards for deck personnel with STCW endorsements by expanding the applicability of the vision standards from one eye to both eyes. This proposal would provide consistency with the 2010 amendments to the STCW Convention. Requirements for mariners who suffer from vision loss or lost vision in one eye remain the same. At the time of application for an endorsement, mariners must hold a valid medical certificate or endorsement, or they must submit an application for a medical certificate. Unless provided otherwise, mariners sailing onboard vessels to which STCW applies must hold a valid 2-year medical certificate.

5. Ceremonial License

The Coast Guard proposes to add a provision for issuance of a ceremonial license, which reflects his or her existing domestic officer endorsements, and is suitable for framing. The addition of this optional license is being proposed in response to numerous requests from the public.

6. Quality Standards System (QSS)

The Coast Guard proposes to add Quality Standards System (QSS) requirements for Coast Guard-approved courses. A QSS is a set of policies, procedures, processes, and data that help an organization fulfill its objectives. The use of a QSS by training providers helps in the oversight of courses, ensuring that mariners obtain the training that they need. This proposal would provide consistency with the obligation under the STCW Convention for approved training to be part of a QSS. This would also require providers of approved courses and training programs to be compliant with QSS provisions.

To make it easier for training providers to meet the QSS requirements, the Coast Guard proposes to accept documentation from a National Academic accreditation body or from a national or international quality standard system as meeting one or more of the QSS requirements.

The Coast Guard also proposes to clarify that Coast Guard-accepted QSS organizations may accept and monitor training on behalf of the Coast Guard. Coast Guard-accepted QSS organizations will need to have processes for reviewing, accepting, and monitoring training that are equal to the Coast Guard's course approval and oversight processes.

Additionally, the Coast Guard proposes to introduce a grandfather provision to ensure that approved courses, programs, and training creditable towards an STCW endorsement approved prior to July 1, 2013 must meet the requirements of this section at the next renewal.

7. Post-Dating of MMCs

The Coast Guard proposes to add requirements for an applicant to request post-dating of his or her MMC upon submitting an application. These changes would provide flexibility to the mariner to post-date an MMC for up to 12 months allowing a mariner to start his or her application process early in case a problem arises or he or she has to return to sea. Their application can continue to be processed in their absence. This change will alleviate the situation where a mariner was not getting the benefit of the full 5-year credential.

8. New Towing Endorsements

The Coast Guard proposes to add three new towing endorsements and the associated requirements to obtain them: Apprentice mate (steersman) of towing vessels (utility), Master of Towing Vessels (Utility), and Master of Towing Vessels (Harbor Assist). These endorsements are being proposed in response to recommendations from the Towing Safety Advisory Committee (TSAC) in its review of the towing vessel NVIC 04–01. TSAC recommended the addition of these three endorsements because some mariners were performing these functions without the proper authority, experience, and in some cases, qualifications.

The Coast Guard is establishing a towing vessel (utility) progression, including apprentice mate (steersmen) and a Master of Towing Vessels (Utility) endorsement to cover Towing Vessels performing marine repair, construction, and other utility type services where a full, unlimited Master of Towing Vessels endorsement is inappropriate, and where some persons with Assistance Towing endorsements are currently working beyond the authority of their credentials.

The Master of Towing Vessels (Utility) will authorize service to tow: (1) Barges not used for moving bulk cargo (commodities) for trade; (2) Barges associated with Marine Construction; (3) Dredges; and (4) Pile Drivers.

The Master of Towing Vessels (Harbor Assist) endorsement authorizes service on towing vessels for escorting ships with limited propulsion or navigating capabilities in restricted waters, and for assisting ships to dock and undock in limited local areas. This endorsement may be added to a Master of Towing Vessels (Limited) endorsement after a period of service and the completion of a specified TOAR.

9. Bridge Resource Management (BRM), Leadership and Teamworking Skills, Leadership and Managerial Skills

The Coast Guard proposes to change the name of Procedures for Bridge Team Work to Bridge Resource Management (BRM). BRM and leadership and teamworking skills would be required for the operational-level credential only; and leadership and managerial skills would be required for the management-level credential, as provided in the 2010 amendments to the STCW Convention. These requirements would allow for the approval of BRM courses or combined BRM and leadership and managerial skills courses.

10. Engine Room Resource Management (ERM), Leadership and Teamworking Skills, Leadership and Managerial Skills

The Coast Guard proposes to require Engine room resource management (ERM) training for engineers seeking STCW endorsements. Basic ERM will be required for the operational-level credential, and leadership and managerial skills would be required for the management-level credential in accordance with the 2010 amendments to the STCW Convention. These requirements would allow for the approval of ERM courses or combined ERM and leadership and managerial skills courses.

11. Grandfathering and Transitional Provisions

The Coast Guard proposes transitional and grandfathering provisions consistent with the 2010 amendments to the STCW Convention. The 2010 amendments to the STCW Convention will enter into force on January 1, 2012. However, STCW Regulation I/15 on transitional provisions, allows requirements to come into effect over a 5-year period in order to avoid disruption to the maritime industry. STCW Regulation I/15 also provides that a Party may continue, until January 1, 2017, to issue certificates (MMC) in accordance with the credentialing rules it has in place before the 2010 amendments come into force (January 1, 2012) only with respect to seafarers who begin their sea service or their approved maritime training before July 1, 2013. Candidates who begin their service or their training on or after July 1, 2013, will be subject to the full application of the revised STCW requirements. The Coast Guard has drafted this SNPRM to allow for this phase-in process. These provisions require any seafarer who holds an STCW endorsement prior to January 1, 2012, to provide evidence of meeting the appropriate standard of competence for the applicable STCW endorsement by January 1, 2017.

Domestic requirements provided in this proposed rule will be transitioned during a 5-year period (after the effective date of the final rule) to coincide with the renewal of existing domestic endorsements. Individuals seeking an original credential or raise of grade to an existing credential during this period, and who begin training or service before January 1, 2012, need only meet the requirements in place before that date. Those individuals who start training or service on or after January 1, 2012, must meet all provisions described in the final rule.

12. Tankerman Endorsements

The Coast Guard proposes to add new STCW endorsements for basic and advanced tankerman for oil and chemical, and for basic and advanced tankerman for liquefied gas tanker cargo operations, as required by the 2010 amendments to the STCW Convention. The Coast Guard proposes to use the domestic requirements for the tankerman endorsements as the means to qualify for an STCW tankerman endorsement. Candidates for an STCW endorsement will only need to complete the appropriate assessments of competence in accordance with the appropriate table of competence in the STCW Code.

The Coast Guard proposes to include an STCW endorsement equivalent to the tankerman-PIC (barge).

All of these changes are being proposed to ensure compliance with the 2010 amendments.

The Coast Guard proposes to clarify and update the list of subjects that the tanker courses must cover by including tables of topics for each tanker course.

13. Lifeboatman and Proficiency in Survival Craft Endorsements

In response to comments we received objecting to the use of the term ''survivalman'', the Coast Guard has withdrawn its proposed use and substitutes, in its place, the term ''lifeboatman-limited'' for the domestic endorsement. Regarding the STCW endorsement, the Coast Guard is proposing to use the term proficiency in survival craft and rescue boats other than lifeboats and fast rescue boats—limited (PSC—limited), to ensure consistency with the STCW Convention.

To ensure consistency and clarity, the Coast Guard is proposing to separate the domestic requirements for lifeboatman endorsements (found in §§ 12.407 and 12.409) from the STCW Code requirements for proficiency in survival craft endorsements (found in §§ 12.613 and 12.615). Persons who meet the requirements for a domestic lifeboatman (lifeboatman or lifeboatman-limited) endorsement will be deemed to meet the requirements for an STCW endorsement for proficiency in survival craft (PSC or PSC-limited).

Mariners holding an STCW endorsement will be required to prove that they have maintained the standard of competence every 5 years, in accordance with the 2010 amendments to the STCW Convention. This may be accomplished through a combination of drills and onboard training and experience, with shore-side assessments. The Coast Guard is proposing to accept proof of sea service, specifically one year in the last 5 years, as proof of meeting the requirements for those components of the competence table that can be performed through drills and/or training on board vessels. For those components that cannot be performed onboard a ship, shore-side assessments must be successfully demonstrated.

14. Basic Safety Training (BST) and Advanced Firefighting

The Coast Guard proposes to amend the BST and advanced firefighting requirements to require that mariners prove they have maintained the standard of competence every 5 years, in accordance with the 2010 amendments to the STCW Convention and Code. This may be accomplished through a combination of drills and onboard training and experience, with shore-side assessments. The Coast Guard is proposing to retain the existing arrangement of acceptance of sea service, specifically one year in the last 5 years, as proof of meeting the requirements only for those components of the competence table that can be performed through drills and/or training on board vessels. For those components that cannot be performed onboard a ship, shore-side assessments must be successfully demonstrated.

15. Recognition of Certificates Issued by Other Parties to the STCW Convention

The Coast Guard proposes to establish requirements and procedures for the recognition and endorsement of officer certificates of competence issued by other Parties signatory to the STCW Convention in accordance with the existing laws of the United States.

46 U.S.C. 8103(b)(3)(A) waives the citizenship requirements (except for master) for offshore supply vessels (OSVs) operating from a foreign port. To ensure compliance with the STCW Convention, in the limited cases of OSVs, the U.S. needs to recognize seafarer competence certificates from other countries that have ratified the STCW Convention and are known to issue STCW certificates.

16. Work Hours and Rest Periods

In accordance with the 2010 amendments to the STCW Convention and Code, the Coast Guard proposes to amend the work and rest hours requirements as follows: (1) Expand the application for hours of work and rest periods for mariners to include all personnel with designated safety, prevention of pollution, and security duties onboard any vessel; (2) change the weekly rest hours requirements from 70 hours to 77 hours; (3) require the recording of hours of rest; and (4) include flexibility from the rest hours requirements in exceptional circumstances.

17. Certification for Vessel Personnel With Security Duties and Security Awareness

The Coast Guard is proposing that, after July 1, 2012, all personnel with designated security duties must hold a valid endorsement as vessel personnel with designated security duties or a certificate of course completion from an appropriate Coast Guard-accepted course meeting the requirements of 33 CFR 104.220. This requirement is consistent with the STCW 2010 amendments to ensure that all personnel hold a certificate of proficiency.

The Coast Guard also is proposing that, after July 1, 2012, all other vessel personnel, including contractors, whether part-time, full-time, temporary, or permanent, must hold a valid endorsement in security awareness, or a certificate of course completion from an appropriate Coast Guard-accepted course meeting the requirements of 33 CFR 104.225. This requirement is consistent with the 2010 STCW amendments to ensure that personnel hold a certificate of proficiency.

The training requirements for vessel personnel with designated security duties and for security awareness in compliance with the 2010 amendments to the STCW Convention and Code will be part of a separate rulemaking.

C. Thirty Months of Training for Officer in Charge of an Engineering Watch (OICEW)/Designated Duty Engineer (DDE) Candidates

The November 17, 2009, NPRM proposed to include a requirement for an OICEW or DDE candidate to complete approved education and training of at least 30 months in accordance with Regulation III/1 of the 1995 amendments to the STCW requirements. The 2010 amendments deleted this requirement from regulation; therefore, this SNPRM does not include this provision.

D. Table of Proposed Changes

The following table provides a more detailed summary of significant changes proposed in this SNPRM. The table includes the changes noted in the brief summary of the significant changes listed in part B above, ''Differences between this SNPRM and the Coast Guard's current regulations''.

Current cite	Cite under proposed rule	Summary of proposed changes	Explanation of and reasons for proposed changes
§ 10.107	N/A	Removes definition of *Competent Person*	Moved relevant information into part 13 to ensure consistency, because ''competent person'' deals with tankerman endorsements.
§ 10.107	§ 10.107	Revises the definition for *Coast Guard-accepted*.	The definition is being revised to provide clarification on the instances where something may be approved by the Coast Guard for use in meeting a particular requirement.

Current cite	Cite under proposed rule	Summary of proposed changes	Explanation of and reasons for proposed changes
§ 10.107	§ 10.107	Revises definition of *Day*	References authorization by the U.S. Code and the two-watch system, in accordance with part 15. Adds clarification on service on MODUs. This will link the definition to the U.S. Code and provide further clarification within the regulations.
§ 10.107	§ 10.107	Revises definition of *Designated examiner*	The definition was revised to ensure that a DE applies to the Towing Officer Assessment Record only, as DE previously applied to all qualification processes.
§ 10.107	§ 10.107	Revises the definition of *Near-coastal*	Amends to include exceptions for operator of uninspected passenger vessels (OUPVs) in order to formalize a pre-existing exception for OUPVs.
§ 10.109	§ 10.109	Revises list of endorsements	Adds new endorsements in accordance with parts 11 and 12 to ensure that the lists of endorsements are consistent throughout the regulations.
§ 10.209, 10.231	§ 10.209, 10.231	Adds required documentation for medical examinations.	Adds a medical certificate issued by the Coast Guard. This serves as documentary proof of passing the medical examination.
§ 10.215	Part 10, subpart C	Transfer medical requirements to a new subpart. Revises the physical requirements for mariners applying for a Coast Guard-issued credential These changes include: annual submission of physicals by pilots, revision of vision standard, revision of hearing standard, clarification regarding demonstration of physical ability.	Provides the Coast Guard some flexibility in the acceptance of other tests. The requirement to demonstrate physical ability provides information required for those mariners serving on vessels to which STCW applies.
§ 10.215	§ 10.301	Revises medical certificate validity period	Adds issuance of the new medical certificates with the following period of validity: (1) 2 years for STCW-endorsed mariners, unless the mariner is under the age of 18, in which case the maximum period of validity would be 1 year; (2) 1 year for a mariner who is serving as a first-class pilot, or acting as a pilot under § 15.812; and (3) 5 years for all other mariners, consistent with the current practice and requirements.
§ 10.215	§ 10.305	Vision requirements	The 2010 amendments have expanded the applicability of vision standards from one eye to both eyes for deck personnel with STCW endorsements.
§ 10.217	§ 10.217	Removes reference to temporary permits.	Temporary permits are no longer issued. Formalizes long-standing Coast Guard practice.
§ 10.219	§ 10.219	Amends the manner in which user fees may be paid to credit card or electronic payment only.	This change would eliminate the ability of a mariner to pay by cash and by attaching a check or money order to their application package. This would update fee payment practices by permitting electronic payment of fees.
§§ 10.227, 10.231	§§ 10.227, 10.231	Revises renewal requirements for credentials	Removes the requirement to submit an old, original credential in an application for renewal. This would permit mariners to retain their previous credentials.
§ 10.303	§ 10.410	Removed QSS requirements from § 10.303 and moved them into a new § 10.410.	Adds QSS information into a new section and adds requirement for training providers to develop a QSS. This reflects the STCW requirement to use a QSS. *Adds a grandfather provision to ensure that approved courses, programs, and training creditable towards an STCW endorsement approved prior to July 1, 2013 must meet the requirements of this section at the next renewal.*

Current cite	Cite under proposed rule	Summary of proposed changes	Explanation of and reasons for proposed changes
N/A	§ 10.107	Adds the definition of *Boundary line*	Adding the definition will assist applicants in understanding the limits of the STCW Convention.
N/A	§ 10.107	Adds definition of *Ceremonial license*	Provides mariners an MMC endorsement suitable for framing. This is in response to mariner demand for a ceremonial license.
N/A	§ 10.107	Adds the definition of a *Coast Guard-accepted quality standards system (QSS) organization*.	Adds definition regarding those organizations that may conduct QSS activities in regard to training, consistent with STCW requirements.
N/A	§ 10.107	Adds definition of *Coastwise Voyage*	This is being done to add clarity to the boundaries of these types of voyages.
N/A	§ 10.107	Adds definition of *Deck department*	To clarify the functions of this department.
N/A	§ 10.107	Adds definition of *Designated medical examiner*.	To clarify who can give medical examinations to mariners, establishing a network of medical examiners who have demonstrated an understanding of mariner fitness.
N/A	§ 10.107	Adds the definition of *Domestic voyage*	To clarify that domestic service does not include entering foreign waters. This will assist those operating small passenger vessels in waters close to or adjacent to foreign waters in determining whether the operator would be required to hold an STCW endorsement.
N/A	§ 10.107	Adds definition of *Dual-mode integrated tug barge*.	To clarify what is included in the operations and configuration of this type of ITB.
N/A	§ 10.107	Adds definition of *Engine department*	To clarify the functions of this department.
N/A	§ 10.107	Adds definition of *Gross register tons (GRT)*	Provides definition for term used in the proposed rule and establishes an abbreviation for the use of this term throughout this subchapter. This will help the mariner to readily distinguish between GRT and gross tonnage.
N/A	§ 10.107	Adds the definition of *Gross tonnage (GT)*	This will provide consistency with the STCW Convention and simplify the regulations by establishing an abbreviation for use throughout this subchapter.
N/A	§ 10.107	Adds definition of *Integrated tug barge*	To specify and make clear the features and capabilities of this type of tug barge combination.
N/A	§ 10.107	Adds the definition of *Kilowatt (kW)*	To provide clarity and consistency, as the term is used in conjunction with the implementation of the STCW Convention and STCW Code.
N/A	§ 10.107	Adds the definition of *Management level*	To explain that master, chief mate, chief engineer and first assistant engineer (second engineer officer) are considered management level under the STCW Convention.
N/A	§ 10.107	Adds definition of Officer in Charge of a Navigational Watch (*OICEW*).	To clarify that this endorsement is at the operational level.
N/A	§ 10.107	Adds definition of Officer in Charge of an Engineering Watch (*OICEW*).	To clarify that this endorsement is at the operational level.
N/A	§ 10.107	Adds the definition of *Operational level*	Provides that officer endorsements other than management level are considered operational level under the STCW Convention. This will provide consistency with STCW.
N/A	§ 10.107	Adds the definition of Periodically unattended engine room.	Provides clarity in the application of the service requirements for engineers.
N/A	§ 10.107	Adds the definition of *Propulsion power*	To provide consistency with the use of the term ''propulsion power'' in STCW and to encompass methods of measurement, such as horsepower (HP) and kilowatts (kW).
N/A	§ 10.107	Adds definition of *Push-mode ITBs*	To specify what is included in the configuration of this tug barge unit.
N/A	§ 10.107	Adds definition of *Qualified Assessor*	To clarify the qualifications for this type of evaluator.
N/A	§ 10.107	Adds the definition of *Quality standard system (QSS)*.	To ensure conformity with STCW requirements for use of a QSS and provide clarification of what is intended by this term when used in this subchapter.

Current cite	Cite under proposed rule	Summary of proposed changes	Explanation of and reasons for proposed changes
N/A	§ 10.107	Adds definition of *Seagoing service*	Clarify for the mariner what is included in this type of service, including Great Lakes and inland service. This is in response to public comments specifically requesting credit for all waters.
N/A	§ 10.107	Adds the definition of *Seagoing vessel*	To ensure the definition captures all vessels to which STCW Convention and Code apply. There is no commercial vessels restriction, as appears in the current 46 CFR 15.1101 definition, because that would have excluded vessels such as yachts and government-owned vessels, which are required to be operated by mariners holding an STCW endorsement.
N/A	§ 10.107	Adds definition of *Lifeboatman-Limited*	To provide for a new endorsement for persons serving in a position similar to Lifeboatman but on a vessel without a lifeboat.
N/A	§ 10.107	Adds the definition of *Training program*	To provide clarity regarding what is encompassed within training programs.
N/A	§ 10.205(b)(i)	Adds grandfathering provision for existing STCW endorsements.	Clarifies that this proposed rule does not require a mariner to meet newly proposed requirements in order to retain a credential already held. This will provide mariners with time to meet new requirements, while still being able to serve on those credentials already held.
N/A	§ 10.205(i)	Adds provision regarding Document of Continuity.	To explain the process of replacing a Document of Continuity with an MMC.
N/A	§ 10.209	Adds ceremonial license	Allows mariners to request a ceremonial license when renewing his or her credential.
N/A	§ 10.405	Adds requirements for qualification as a qualified assessor or designated examiner.	To ensure that qualified individuals conduct evaluations of mariners in conformity with the STCW Convention. See Section A–I/6 of the STCW Code.
N/A	§ 10.409	Adds requirements for approval as a Coast Guard-accepted QSS organization.	Requires organizations wishing to accept and monitor training to submit application for approval. Coast Guard-accepted QSS organizations will be audited once every five years. This is to ensure compliance with STCW and to provide oversight of these organizations.
N/A	§ 10.411	Adds simulator performance standards	To provide consistency with existing requirements and Section A–I/12 of the STCW Code.
N/A	§ 10.412	Adds distance and e-learning	Adds a provision that will allow mariners to complete certain approved training via distance or e-learning courses. This will allow more options for obtaining training.
§§ 11.201, 11.205	§ 11.201	Re-organizes and consolidates all general requirements applicable to all domestic and STCW officer endorsements.	Consolidates all endorsement requirements from the various sections (including §§ 11.201, 11.205) into a general section with sub-titles to allow for easy reference.
§ 11.202	§ 15.817	Moves section for GMDSS competency Requires that all deck officers serving on vessels equipped with Global Maritime Distress and Safety System (GMDSS) provide an endorsement for GMDSS.	This re-organizes the regulations to make them easier to access and follow.
§ 11.202	§ 15.816	Moves section for ARPA competency Requires that all deck officers serving on vessels equipped with ARPA prove competency.	This re-organizes the regulations to make them easier to access and follow.
§ 11.202, 11.205	§ 11.301	Re-organizes and consolidates all requirements applicable to all STCW officer endorsements.	Consolidates all endorsement requirements from various sections (including §§ 11.202 and 11.205) into a general section with subtitles to allow for easy reference.
§ 11.202(c)	§§ 11.305 to 11.321	Moves the requirement for automatic radar plotting aid (ARPA) from the general section.	To place the requirement in the appropriate operational-level and management-level certificate.

Current cite	Cite under proposed rule	Summary of proposed changes	Explanation of and reasons for proposed changes
§ 11.202(d)	§§ 11.305 to 11.321	Moves the requirement for the training and assessment on Global Maritime Distress and Safety System (GMDSS) from the general section.	Incorporates the GMDSS requirement with the requirement for the appropriate operational-level and management-level certificate to simplify and clarify the GMDSS requirement.
§ 11.202(e)	§§ 11.305 to 11.321	Changes the name of Procedures for Bridge Team Work to Bridge Resource Management (BRM).	The BRM will be required for the operational level credential and leadership and managerial skills will be required for the management level credential. This will provide consistency with STCW.
§ 11.202(e)	§§ 11.305 to 11.321	Moves the requirement for Bridge Resource Management.	Moves the BRM requirement to the appropriate operational-level certificate in order to clarify and simplify the requirement.
§ 11.202(b)	§ 11.301(b)	Moves requirements for Basic Safety Training (BST).	Adds requirements for BST, including the requirement to maintain the standard of competence every 5 years through a combination of drills and onboard training and experience with shore-side assessments. This will ensure mariners maintain knowledge of BST.
§ 11.202(f)	§ 11.301(j) and (k)	Moves exemptions and relaxations for vessels that are not subject to further obligation.	Moves exemption and relaxation requirements applicable to vessels that are exempt from the requirements or that are applicable because of their special operating condition as small vessels in domestic voyages. This was done to simplify the regulations by placing all STCW requirements in one subpart.
§ 11.205(c)	N/A	Letters of reference	Removes the requirement to submit letters of reference because of the depth of new background investigation procedures by both the Coast Guard and the Transportation Security Administration.
§ 11.205(d)	§ 11.201(h)	Reduces firefighting training requirements for certain endorsements.	Reduces the training from basic and advanced firefighting to basic firefighting training for vessels of less than 200 GRT in ocean services. This will reduce the burden on mariners serving on these vessels.
§ 11.205(d)	§ 11.201(h)	Adds firefighting training requirements for certain endorsements.	Mandates basic firefighting training for some endorsements on non-ocean services. This is to ensure that mariners with those endorsements have basic firefighting skills and to improve overall maritime safety.
§§ 11.211(a) and (b), 11.213.	§ 10.232	Creates new section for sea service	Inserts new section to discuss sea service issues applicable to all credentials, including foreign sea service, documentation to show proof of sea service, and sea service as a member of the armed forces. This is in response to public comments requesting further clarification on sea service requirements.
§ 11.211(d)	§ 11.211(c)	Expands sea service credit on Articulated Tug Barges (ATBs).	The Coast Guard would allow the service on ATBs to qualify for unlimited tonnage officer endorsements. This will reduce the burden on the mariner seeking to qualify for these endorsements.
§ 11.301	§ 10.401	Revises the applicability to include training programs.	Clarifies that the STCW Convention covers all training used to pursue certification, whether or not it is part of an approved course or training program. See Regulation ⅙ of the STCW Convention and Section A–I/6 of the STCW Code.
§ 11.302	§ 10.402	Revises the credit that can be provided by course approval to allow for multiple purposes.	Provides industry more flexibility to complete the requirements as current regulations are too confining.
§ 11.302	§ 10.402	Revises the requirements for the request for course approval.	Incorporates previously issued guidance documents. This is to assist industry in understanding otherwise vague requirements.
§ 11.302	§ 10.402	Clarifies the circumstances that could lead to the suspension of course approval for a training course.	Organizes the requirements for suspension of course approvals.

Current cite	Cite under proposed rule	Summary of proposed changes	Explanation of and reasons for proposed changes
			This is being done in response to public comments regarding course approval suspensions.
§ 11.302	§ 10.402	Revises the reasons for withdrawal of course approval.	Clarifies reasons for withdrawal of course approval.
§ 11.303	§ 10.403	Revises section to require that each student demonstrate practical skills appropriate for the course.	Ensures that the training provided meets the requirements of the STCW Convention, i.e., not only ensuring applicant knowledge, understanding and proficiency (KUP), but also requiring a demonstration of skills. See STCW Regulation ⅙ of the STCW Convention.
§ 11.303	§ 10.403	Revises the records and reports required for each approved course.	Provides the Coast Guard the ability to be consistent with obligations under the STCW Convention to validate the training received by merchant mariners. See Regulation I/8 of the STCW Convention.
§ 11.303	§ 10.403	Adds QSS requirements for an approved course.	Provides consistency with the obligation under the STCW Convention for approved training to be part of a QSS. See Regulation I/8 of the STCW Convention.
§ 11.304	§ 10.404	Revises the requirement to substitute all sea service for successful completion of an approved training program.	Provides service credit for training programs, because they regularly provide more extensive training situations and broader opportunities to demonstrate proficiency.
§ 11.305	N/A	Removes specific requirements regarding radar-observer certificates and qualifying courses.	Removes requirements now unnecessary due to other proposed changes throughout this subpart.
§ 11.309	§ 10.409	Revises section to reduce redundant language from other sections of this subpart.	Provides clarification with reference to § 10.402 for collecting the necessary information.
§ 11.309	§ 10.409	Adds QSS requirements for accepted training	Provides consistency with the STCW Convention for approved training to be part of a QSS. See Regulation I/8 of the STCW Convention.
§ 11.401	N/A	Removes the requirement for deck officers to obtain a qualification as able seaman.	Provides consistency with the STCW Convention that does not require a qualification as able seaman for seagoing deck officers.
§ 11.402	§ 11.402	Revises tonnage limitations for an unlimited officer endorsement by setting the minimum to 2,000 GRT.	Establishes a revised minimum tonnage limitation. It was previously possible to obtain a limitation of less than 2,000 GRT. This requirement eases the burden on mariners seeking removal of tonnage limitations on their licenses.
§ 11.400 et seq.	§ 11.400 et seq.	Links domestic to deck STCW endorsements	Provides better organization and clarification by linking the endorsements.
§ 11.463	§ 11.463(g)	Adds a restriction to a specific type of towing vessel and/or towing operation. Adds the requirement for towing vessel officers serving on seagoing vessels to comply with the STCW Convention.	Adds provision for a towing vessel restriction such as harbor-assist or articulated tug barge (ATB) vessels that do not routinely perform all of the tasks in the TOAR. Clarifies the regulations and policy for officers on towing vessels.
§ 11.463	§ 11.463	Grandfathering provision	Minimizes the burden on mariners by re-opening grandfathering provision for those who met training and service requirements prior to May 21, 2001.
§ 11.465	§ 11.465	Adds a time limit for acceptance of TOARs	The TOAR must be completed within 5 years of application for license to be consistent with the continued proficiency requirements for the renewal of a towing endorsement.
§ 11.465	§ 11.465	Endorsement for master of towing vessels (Harbor assist).	New requirements for endorsement applicable to master of towing vessel (limited) with service and TOAR. This endorsement was established in response to requests from industry and recommendations from the Towing Safety Advisory Committee.
§ 11.465	§ 11.465	Endorsement for master of towing vessel (utility).	New requirements for endorsement including service and TOAR.

Current cite	Cite under proposed rule	Summary of proposed changes	Explanation of and reasons for proposed changes
			This endorsement was established in response to requests from industry and recommendations from the Towing Safety Advisory Committee.
§ 11.466	§ 11.466	Endorsement as apprentice mate (steersman) of towing vessels (utility).	New requirements for endorsement including service and examination. This endorsement was established in response to requests from industry and recommendations from the Towing Safety Advisory Committee.
§ 11.467	§ 11.467	Adds the limitation to the endorsement as operator of uninspected passenger vessels to not more than 100 nautical miles offshore.	Clarifies that this endorsement is limited to domestic near-coastal waters not more than 100 nautical miles offshore. This makes clear that this endorsement authorizes only domestic voyages.
§ 11.482	§ 11.482	Limitations for assistance towing endorsements.	Clarifies and simplifies the application of the assistance towing endorsement.
§ 11.493	§ 11.493	Revises language for Master (OSV)	Eliminates unnecessary language and ensures consistency with STCW Convention and Code requirements.
§ 11.495	§ 11.495	Revises language for Chief Mate (OSV)	Eliminates unnecessary language and ensures consistency with STCW Convention and Code requirements.
§ 11.500 et seq	§ 11.500 et seq	Links domestic to engineer STCW endorsements.	Simplifies the regulations by providing link to appropriate section to add engineer STCW endorsement to existing domestic endorsement.
§ 11.553	§ 11.553	Revises language for Chief Engineer (OSV)	Eliminates unnecessary language and ensures consistency with STCW Convention and Code requirements.
§ 11.555	§ 11.555	Revises language for Assistant Engineer (OSV).	Eliminates unnecessary language and ensures consistency with STCW Convention and Code requirements.
§ 11.901	§ 11.901	Removes the list of endorsements requiring STCW endorsement.	Amends section because the list of endorsements was redundant and unnecessary in this location.
§ 11.903	§ 11.903	Revises the list of endorsements requiring examination.	Removes the endorsements that do not require an examination, based on a change in policy and progression consistent with the STCW Convention, i.e., master and second mate.
§ 11.910	§ 11.910	Revises table 11.910–1	Clarifies and simplifies the regulations by reflecting the combined endorsements at the management and operational levels.
§ 11.910	§ 11.910	Revises table 11.910–2	To revise the table of subjects in order to reflect combined examinations at the operational and management levels and the STCW Convention.
§ 11.950	§ 11.950	Revised table 11.950 by creating table for seagoing vessels and another for Great Lakes and inland waters.	Clarifies and updates the table to reflect the combined endorsements at the management and operational levels and the STCW Convention.
§§ 11.1001 to 11.1005	N/A	Delete requirements for roll-on/roll-off passenger ships.	To reflect the 2010 STCW amendment changes to include requirements for passenger ships. This also simplifies the regulations by merging requirements from subparts J and K.
§ 11.1103	§ 10.107	Definition for passenger ship	Transferred definition from § 11.1103 to § 10.107 for consistency purposes.
§ 11.1105	§ 11.1105	Amend requirements for officers on passenger ships when in international voyages.	Reflects the 2010 STCW amendment changes to include requirements for passenger ships. This also simplifies the regulations by merging requirements from subparts J and K.
N/A	§ 11.301(a)	Standard of Competence	Adds alternative methods of demonstrating competence to provide mariners with multiple options, where allowed by the STCW Convention.
N/A	§ 11.301(d)	Great Lakes and inland service	Grants day-for-day equivalency for Great Lakes service and two- for-one for inland service.

Current cite	Cite under proposed rule	Summary of proposed changes	Explanation of and reasons for proposed changes
			This is in response to public comments requesting equivalency for Great Lakes service.
N/A	§ 11.301(i)	Grandfathering provisions	These provisions will ease the transition for mariners with existing endorsements. Ensure consistency with the 2010 amendments to the STCW Convention and Code.
N/A	§ 11.301(f)	Rating service for management-level endorsements.	Service as rating not acceptable for management-level STCW endorsements. This ensures consistency with the STCW Convention.
N/A	§ 11.301(d)	Service accrued on vessels with dual tonnages.	Service will be credited using the international tonnage. This ensures consistency with the STCW Convention.
N/A	§ 11.301(c)	Requirements for Advanced Firefighting	Adds requirements for Advanced Firefighting including the requirement to maintain the standard of competence every 5 years through a combination of drills and onboard training and experience with shore-side assessments. This ensures consistency with the STCW Convention.
N/A	§ 11.303	List of STCW deck officer endorsements	List of endorsements included in the applicable subsequent sections. This re-organizes the regulations to make them easier for the mariner to access.
N/A	§ 11.323	List of STCW engineer officer endorsements	List of endorsements included in the applicable subsequent sections. This re-organizes the regulations to make them easier for the mariner to access.
N/A	§§ 11.303 to 11.321; §§ 11.323 to 11.335.	Requirements for STCW deck and engineer officer endorsements.	Includes the STCW Convention list of requirements in order to obtain the endorsement. This re-organizes the regulations to make them easier for the mariner to access.
N/A	§§ 11.305 to 11.321; §§ 11.325 to 11.335.	Sea service requirements for STCW deck and engineer officer endorsements.	Includes STCW Convention language providing various alternatives for sea service. This re-organizes the regulations to make them easier for the mariner to access. This also provides for acceptance of various modes of sea service.
N/A	§§ 11.305 to 11.321; §§ 11.325 to 11.335.	Standard of competence from the STCW Code.	Provides a specific requirement to meet the standard of competence from the appropriate tables in the STCW Code. This ensures consistency with the STCW Convention.
N/A	§§ 11.305 to 11.325; §§ 11.323 to 11.335.	Requirement for training	Includes STCW Convention mandatory training. This ensures consistency with the STCW Convention.
N/A	§§ 11.305 to 11.321; §§ 11.325 to 11.335.	Gap closing measures from the 2010 amendments.	Includes training necessary to comply with the 2010 amendments. This ensures consistency with the STCW Convention.
N/A	§§ 11.305 to 11.321; §§ 11.325 to 11.335.	Exemptions from the standard of competence	Provides for exemptions from the tables of competence based on vessel type.
N/A	§§ 11.305 to 11.321; §§ 11.325 to 11.335.	Insert tables specifying entry paths from domestic endorsements to STCW endorsements.	Describes various entry points to obtain an equivalent STCW endorsement. This provides a method of determining which STCW endorsements are attainable for each domestic endorsement.
N/A	§ 11.335	Adds a new section providing the requirements for STCW officer endorsement as electro-technical officer.	This ensures consistency with the STCW Convention. See regulation III/6 of the STCW Convention and Section A–III/6 of the STCW Code.
N/A	§ 11.335	Equivalency accepted for personnel serving in a similar capacity.	Allows for the issuance of the STCW officer endorsement as electro-technical officer to personnel with equivalent credentials and sea service. This makes it easier for an applicant to obtain this endorsement.

Current cite	Cite under proposed rule	Summary of proposed changes	Explanation of and reasons for proposed changes
N/A	§ 11.335	Equivalency accepted for engineer officers	Allows for the issuance of the STCW officer endorsement as electro-technical officer to OICEW, second engineer officer and chief engineer officer. This makes it easier for an applicant to obtain this endorsement.
N/A	§ 11.821	High-speed craft	Establishes qualifications for operating high-speed craft. This ensures consistency with the STCW Convention.
N/A	Subpart J	New section on recognition of STCW officer endorsements issued by a foreign government.	Establishes requirements for the recognition of STCW Certificates issued by foreign governments. Recognition is restricted to non-U.S. licensed officers and mariners with officer endorsements (except masters) found in § 15.720(b). Application for a recognition certificate via the employer. This ensures consistency with the STCW Convention.
§ 12.02–7	§ 15.401	Moves this requirement to § 15.401	Moves section to part 15 as it is a manning requirement. This re-organizes the regulations to make them easier to understand.
§ 12.02–17	§ 12.205(c)	Amends provisions for re-testing	Amends waiting period after third failed examination. Deletes maximum waiting period of 30 days after initial failure. This allows applicants to re-test earlier than the current time period.
§ 12.03	Subpart D (§ 10.400 series).	Consolidates Coast Guard-accepted and approved training into one subpart.	Reduces regulatory redundancy.
§ 12.05–1	§ 12.401	Adds A/B seaman endorsements	Adds able seaman-fish, and able seaman-sail. This consolidates policy into the regulations.
§ 12.05–1(a) and (b)	§ 15.401	Moves this requirement to § 15.401	Moves paragraphs to part 15 as it is a manning requirement. This re-organizes the regulations to make them easier to understand.
§ 12.05–3	§ 12.401	Revises the general requirements to obtain an endorsement as able seaman (A/B) to include holding or qualified to hold an endorsement as lifeboatman.	Clarifies the A/B requirement to allow being qualified for lifeboatman, and removes the requirement to pass the lifeboatman exam if the individual already holds the appropriate endorsement. This eases the burden on mariners seeking to obtain this endorsement.
§ 12.05–3(a)(2), 12.15–5, 12.25–20.	§ 12.401	Moves requirement to § 12.401	Consolidates general requirements for certification. This re-organizes the regulations to make them easier for the mariner to access.
§ 12.05–3(b)	§ 12.601(c)	Moves requirements for Basic Safety Training (BST).	Adds requirements for BST, including the requirement to maintain the standard of competence every 5 years through a combination of drills and onboard training and experience with shore-side assessments. This ensures consistency with the STCW Convention.
§ 12.05–3(c)	§ 12.605	Adds a new section to provide the requirements for ratings forming part of a navigational watch (RFPNW).	Provides requirements for RFPNW, required by the STCW Convention, in one location. This ensures consistency with the STCW Convention.
§ 12.05–7	§ 12.403	Adds service and training requirements for new rating endorsements.	Adds service and training requirements for able seaman-fish, and able seaman-sail. This consolidates policy into the regulations.
§ 12.05–9	§ 12.405	Adds requirement in paragraphs (a) and (c) to show that the listed demonstrations have been performed in a Coast Guard-approved course.	This consolidates existing policy into the regulations.
§ 12.10–1	§ 15.401	Moves this requirement to § 15.401	Moves section to part 15 as it is a manning requirement. This re-organizes the regulations to make them easier to understand.
§ 12.10–3	§ 12.609	Moves requirements to qualify for an STCW endorsement RFPEW.	Moves requirement to STCW section. This re-organizes the regulations to make them easier to understand.

Current cite	Cite under proposed rule	Summary of proposed changes	Explanation of and reasons for proposed changes
§ 12.10–7	§ 15.404	Moves this requirement to § 15.404	Moves section to part 15 as it is a manning requirement. This re-organizes the regulations to make them easier to understand.
§ 12.10–9	§ 12.617	Revises the requirements for certificates of proficiency in fast rescue boats, adding the specific areas of competence the STCW Convention requires.	Provides additional information clarifying the STCW Convention requirements to obtain an endorsement for proficiency in fast rescue boats. This ensures consistency with the STCW Convention.
§ 12.13–3	§ 12.619	Revises the requirements for certificates of proficiency for medical first-aid provider, adding the specific areas of competence the STCW Convention requires.	Provides additional information clarifying the STCW Convention requirements to obtain an endorsement for medical first-aid provider. This ensures consistency with the STCW Convention.
§ 12.13–3	§ 12.619	Revises this basis-of-documentary-evidence section to include those persons who have alternative qualifications.	Adds the additional process to meet this requirement through the possession of a professional license or alternative professional qualification. This opens up additional options for mariners to utilize in obtaining this endorsement.
§ 12.13–3	§ 12.621	Revises the requirements for certificates of proficiency for person-in-charge of medical care, adding the specific areas of competence the STCW Convention requires.	Provides additional information clarifying the STCW Convention requirements to obtain an endorsement for person-in-charge of medical care. This ensures consistency with the STCW Convention.
§ 12.13–3	§ 12.621	Revises this basis-of-documentary-evidence section to include those persons who have alternative qualifications.	Adds the additional process to meet this requirement through the possession of a professional license or alternative professional qualification. This opens up additional options for mariners to utilize in obtaining this endorsement.
§ 12.15–1	§ 15.401	Moves this requirement to § 15.401	Moves section to part 15 as it is a manning requirement. This re-organizes the regulations to make them easier to understand.
§ 12.15–3(e)	§ 12.501	Revises the rating forming part of an engineering watch (RFPEW) requirement for Qualified Member of the Engineering Department (QMED).	Removes the specific requirement for the STCW endorsement as RFPEW associated with QMED and moves it to its own section. This re-organizes the regulations to make them easier to understand.
§ 12.15–3(e)	§ 12.609	Adds a new section to provide the requirements for RFPEW.	Provides requirements for RFPEW, required by the STCW Convention, in one location. This re-organizes the regulations to make them easier to understand.
§ 12.15–7	§ 12.501	Revises the requirement to provide a more general requirement that a QMED endorsement applicant must complete an appropriate training program.	There is no need to provide specific information regarding the training programs and courses; this information is included in the course approval letters provided to each training provider. This makes the regulations easier to follow.
§ 12.15–9	§ 12.501	Reduces the number of QMED ratings from 9 to 5.	Deletes deck engineer, combines refrigerating engineer with electrician, and combines pumpman and machinist. This simplifies the regulations by removing several endorsements that are no longer used and combines several others.
§ 12.15–11	§ 12.505	QMED rating endorsement list	Revises the list of QMED rating endorsements. Deletes deck engineer, combines refrigerating engineer with electrician, and combines pumpman and machinist. This makes the regulations easier to follow.
§ 12.15–13	N/A	Deletes deck engine mechanic rating as an MMC endorsement.	Deletes this rating for new applicants; however, companies that wish to continue to employ mariners in this rating may do so. This simplifies the regulations by removing several endorsements that are rarely used and combines several others.
§ 12.15–15	N/A	Deletes engineman rating as an MMC endorsement.	Deletes this rating for new applicants; however, companies that wish to continue to employ mariners in this rating may do so.

Current cite	Cite under proposed rule	Summary of proposed changes	Explanation of and reasons for proposed changes
			This simplifies the regulations by removing several endorsements that are rarely used and combines several others.
§ 12.25–1	§ 12.701	Changes section title from "Credentials required" to "Credentials required for entry-level and miscellaneous ratings".	Revises for clarity.
§ 12.25–10	§ 12.703	Moves general requirements	Consolidates general requirements for entry level ratings. This makes the regulations easier to follow.
§ 12.25–45	§ 15.818	Moves section for GMDSS at-sea maintainer Requires that anyone serving as at-sea maintainers on vessels equipped with GMDSS must provide documentary evidence of competency.	This re-organizes the regulations to make them easier to access and follow.
§ 12.25–45	§ 12.623	Revises section to provide more specific information regarding the qualification requirements for an endorsement as GMDSS at-sea maintainer.	Specifies the methods of qualification allowed to obtain the endorsement. This ensures consistency with the STCW Convention and makes the regulations easier to follow.
§ 12.30	N/A	Deletes requirements for ro-ro passenger ships.	Reflects the 2010 STCW amendment changes to include requirements for passenger ships, including ro-ro passenger ships.
§ 12.35	§ 12.905	Amends requirements for ratings on passenger ships when in international voyages.	Reflects the 2010 amendment changes to include requirements for passenger ships. Merges requirements from subparts 12.30 and 12.35. This ensures consistency with the STCW Convention.
N/A	§ 12.201	Adds section with general requirements for domestic and STCW rating endorsements.	Consolidates all requirements applicable to all rating endorsements contained in this part. This makes the regulations easier to follow.
N/A	§ 12.203	Adds section with documentation of sea service for ratings.	Provides information on where to find the requirements for documentation and proof of sea service for ratings. This makes the regulations easier to follow.
N/A	§ 12.409	Adds new section with requirements for lifeboatman-limited endorsement.	This endorsement is for mariners who serve on vessels without installed lifeboats. Mariners serving on vessels without lifeboats could not qualify for the lifeboatman endorsement.
N/A	§ 12.601	Adds section with general requirements applicable to STCW rating endorsements.	Consolidates all requirements applicable to STCW endorsements in this subpart. Establishes list of STCW rating endorsements. This makes the regulations easier to follow.
N/A	§ 12.601	Adds section with standard of Competence	Adds alternative methods of demonstrating competence. This provides mariners with multiple options, where allowed by the STCW Convention.
N/A	§ 12.601	Adds section with grandfathering provisions	Adds provisions for the implementation of the amendments to the requirements, including the 2010 amendments to the STCW Convention and Code. This eases the burden on mariners with existing endorsements.
N/A	§§ 12.603—12.609	Insert tables specifying entry paths from domestic endorsements to STCW endorsements.	Describes various entry points to obtain an equivalent STCW endorsement. This provides a method of determining which STCW endorsements are attainable for each domestic endorsement.
N/A	§ 12.603	Adds new section with requirements for STCW rating endorsement as able seafarer-deck.	Includes the STCW Convention requirements in order to obtain the endorsement. This ensures consistency with the STCW Convention.
N/A	§ 12.605	Adds new section providing the requirements for RFPNW.	Provides specific requirements for this STCW endorsement. This ensures consistency with the STCW Convention.
N/A	§ 12.607	Adds a new section with requirements for STCW endorsement as able seafarer-engine.	Includes the STCW Convention requirements in order to obtain the endorsement. This ensures consistency with the STCW Convention.

Current cite	Cite under proposed rule	Summary of proposed changes	Explanation of and reasons for proposed changes
N/A	§ 12.609	Adds new section providing the requirements for RFPEW.	Provides specific requirements for this STCW endorsement. This ensures consistency with the STCW Convention.
N/A	§ 12.611	Adds a new section providing the requirements for STCW officer endorsement as electro-technical rating.	Includes the STCW Convention requirements in order to obtain the endorsement. See regulation III/7 of the STCW Convention and Section A–III/7 of the STCW Code. This ensures consistency with the STCW Convention.
N/A	§ 12.611	Equivalent arrangements for personnel serving in a similar capacity.	Allows for the issuance of the STCW endorsement as electro-technical rating to personnel with equivalent credentials and sea service. This provides applicants with multiple paths to obtain this endorsement.
N/A	§ 12.613	Adds new section with requirements for Proficiency in survival craft and rescue boats other than fast rescue boats (PSC). Adds requirements to maintain the standard of competence every 5 years through a combination of drills and onboard training and experience with shore-side assessments.	This ensures consistency with the STCW Convention.
N/A	§ 12.615	Adds new section to provide a new endorsement for proficiency in survival craft and rescue boats other than lifeboats and fast rescue boats (PSC-limited).	Adds new section because there are individuals assigned to vessels without lifeboats who do not need to meet the full requirements for proficiency in survival craft and rescue boats other than fast rescue boats (PSC), but must still meet the proficiency in the survival craft installed on their vessels. This ensures consistency with the STCW Convention.
N/A	§ 12.615	Adds new section with requirements for Proficiency in survival craft and rescue boats other than lifeboats and fast rescue boats (PSC). Adds requirements to maintain the standard of competence every 5 years through a combination of drills and onboard training and experience with shore-side assessments.	This ensures consistency with the STCW Convention.
N/A	§ 12.617	Adds new section with requirements for Proficiency in fast rescue boats. Adds requirements to maintain the standard of competence every 5 years through a combination of drills and onboard training and experience with shore-side assessments.	This ensures consistency with the STCW Convention.
N/A	§ 12.625	Adds new section with requirements to qualify for an STCW endorsement as vessel personnel with designated security duties.	Adds requirement for certification of personnel with security duties (except VSOs) in accordance with the 2010 amendments. This ensures consistency with the STCW Convention.
N/A	§ 12.627	Adds new section with requirements to qualify for an STCW endorsement in security awareness.	Adds requirement for all other personnel working onboard the vessels, in accordance with the 2010 amendments. This ensures consistency with the STCW Convention.
§ 13.120	§ 13.120	Amends the requirements for transfers for the renewal of tankerman endorsements. Also adds requirements for STCW certification valid for tank vessels.	Clarifies the types of transfers required according to the type of endorsement being renewed.
§ 13.121	§ 13.121	Includes tables of topics for each tanker course.	Clarifies and updates list of subjects that the tanker courses must cover. This makes the regulations easier to follow.
§ 13.127	§ 13.127	Service requirements for tankerman-engineer	Clarifies information that must be included in the service letter for tankerman-engineer. This makes the regulations easier to follow.
§ 13.201	§ 13.201	Moves the cargo course and firefighting course requirements of this section to § 13.121.	Clarifies existing requirements. This makes the regulations easier to follow.

Current cite	Cite under proposed rule	Summary of proposed changes	Explanation of and reasons for proposed changes
§ 13.301	§ 13.301	Moves the cargo course and firefighting course requirements of this section to § 13.121.	Clarifies existing requirements. This makes the regulations easier to follow.
§ 13.307, § 13.309	§ 13.121	Moves the firefighting and cargo course requirements of this section to § 13.121.	Provides firefighting and cargo training course subjects in the appropriate table. This makes the regulations easier to follow.
§ 13.401	§ 13.401	Amends Tankerman-Assistant requirements ... Adds an examination requirement for mariners who qualify for the endorsement on sea service alone.	This ensures that an applicant has the necessary knowledge to obtain this endorsement.
§ 13.407, § 13.409	§ 13.121	Moves the firefighting and cargo course requirements of this section to § 13.121.	Provides firefighting and cargo training course subjects in the appropriate table. This makes the regulations easier to follow.
§ 13.501	§ 13.501	Moves the cargo course and firefighting course requirements of this section to § 13.121.	Clarifies existing requirements. This makes the regulations easier to follow.
N/A	§ 13.601	Adds new section with alternative methods of demonstrating competence to provide mariners with multiple options, where allowed by the STCW Convention.	This opens additional paths of demonstrating competence.
N/A	§ 13.603	Adds new section for STCW endorsement for advanced tankerman. Adds new STCW endorsement for advanced oil and chemical tanker cargo operations, in accordance with the 2010 amendments. Includes grandfathering provisions.	This ensures consistency with the STCW Convention. This also ases the transition for mariners with similar endorsement.
N/A	§ 13.603	Adds new section with requirements to qualify for an endorsement for advanced oil tanker cargo operations and basic chemical tanker cargo operations.	Uses existing domestic endorsements as ''Tankerman PIC'' to qualify for STCW endorsements. This ensures consistency with the STCW Convention. This also eases the transition for mariners with similar endorsement.
N/A	§ 13.605	Adds new section with STCW endorsement for advanced liquefied gas tanker cargo operations. Adds new STCW endorsement for advanced liquefied gas tanker cargo operations, in accordance with the 2010 amendments. Includes grandfathering provisions.	This ensures consistency with the STCW Convention. This also eases the transition for mariners with similar endorsement.
N/A	§ 13.605	Adds new section with requirements to qualify for an endorsement for advanced liquefied gas tanker cargo operations.	Uses existing domestic endorsements as ''Tankerman PIC'' to qualify for STCW endorsements. This ensures consistency with the STCW Convention. This also eases the transition for mariners with similar endorsement.
N/A	§ 13.607	Adds new section with STCW endorsement for basic oil and chemical tanker cargo operations. Adds new STCW endorsement for basic oil and chemical tanker cargo operations, in accordance with the 2010 amendments. Includes grandfathering provisions.	This ensures consistency with the STCW Convention. This also eases the transition for mariners with similar endorsement.
N/A	§ 13.607	Adds new section with requirements to qualify for an endorsement for basic oil tanker cargo operations and basic chemical tanker cargo operations.	Uses existing domestic endorsements as ''Tankerman-assistant'' and ''Tankerman-engineer'' to qualify for STCW endorsements. This ensures consistency with the STCW Convention. This also eases the transition for mariners with similar endorsement.
N/A	§ 13.609	Adds new section for STCW endorsement for basic liquefied gas tanker cargo operations. Adds new STCW endorsement for basic liquefied gas tanker cargo operations, in accordance with the 2010 amendments..	This ensures consistency with the STCW Convention. This also eases the transition for mariners with similar endorsement. Includes grandfathering provisions

Current cite	Cite under proposed rule	Summary of proposed changes	Explanation of and reasons for proposed changes
N/A	§ 13.609	Adds new section with requirements to qualify for and endorsement basic liquefied gas tanker cargo operations.	Uses existing domestic endorsements as ''Tankerman-assistant'' and ''Tankerman-engineer'' to qualify for STCW endorsements. This ensures consistency with the STCW Convention. This also eases the transition for mariners with similar endorsement.
§ 14.309	§ 14.309	Expands options for payment of wages upon discharge of a mariner.	In order to reflect current practices for electronic fund transfer for payment of wages, the Coast Guard proposes to allow companies to provide, instead of payment, a statement of wages due and when wages will be deposited.
§ 15.103	§ 15.105	Adds clarification that a safe manning certificate may be issued to uninspected vessels on an international voyage.	Provides uninspected vessels on international voyages the necessary information they will need to provide Port State Control Officers in foreign ports. This ensures consistency with the STCW Convention.
§ 15.515	§ 15.515	Clarifies the requirement regarding passenger vessels.	Provides clarification to assist in understanding manning requirements because existing language is confusing.
§ 15.605	§ 15.605	Adds the requirement that individuals serving on uninspected passenger vessels (UPVs) on international voyages must comply with the STCW Convention.	UPVs operating on near-coastal domestic voyages are held to be substantially in compliance with the STCW Convention. However, the STCW Convention requires all individuals to be in compliance with the STCW Convention when on international voyages. This ensures consistency with the STCW Convention. This also makes it clear that operators on UPVs on international voyages must obtain the appropriate STCW endorsement.
§ 15.805	§ 15.805	Provides for all UPVs on international voyages to be under the control of an individual holding a license or endorsement as master.	Provides consistency with the STCW Convention, which requires that all vessels on an international voyage, including UPVs, must be operated by an individual who complies with the STCW Convention.
§ 15.845	§ 15.845	Adds manning provision for new lifeboatman-limited rating.	Provides an alternative for those vessels without lifeboats and sets the provisions to use the lifeboatman-limited endorsement instead of the lifeboatman endorsement.
§ 15.1101	§ 15.1101	Moves definitions of this section to § 10.107, and this section now provides a list of vessels exempt from having to comply with the STCW Convention. Also provides for certificates for a single international voyage for persons serving on vessels exempted under this section.	This makes the regulations easier to follow.
§ 15.1103	§ 15.1103	Adds requirement for medical certificate as a condition of employment.	All mariners must have a medical certificate. The 2010 amendments to the STCW Convention require a 2-year medical certificate for all seafarers holding STCW endorsements.
		In addition, provides an extension, not to exceed 90 days, if the certificate expires during a voyage.	This ensures consistency with the STCW Convention.
§ 15.1111	§ 15.1111	Revises hours of work and rest periods for mariners.	The following changes are included as part of the 2010 amendments: 1) expanded the application for hours of rest periods for mariners; 2) amended the weekly rest hour requirements from 70 hours to 77 hours; 3) recording of hours of rest and 4) included flexibility from the rest hour requirements in exceptional circumstances. This ensures consistency with the STCW Convention.
§ 15.1111	§ 15.1111	Adds requirements for persons to hold an STCW endorsement for personnel with security duties.	This ensures consistency with the STCW Convention.

Current cite	Cite under proposed rule	Summary of proposed changes	Explanation of and reasons for proposed changes
		Adds requirement for persons with security duties to hold an STCW endorsement for personnel with security duties. This requirement has already been implemented with regards to VSOs.	
§ 15.1111	§ 15.1111	Adds requirements for persons to hold an STCW endorsement in security awareness.	This ensures consistency with the STCW Convention.
		Adds requirement for all other personnel working on board the vessels to hold an STCW endorsement in security awareness, in accordance with the 2010 amendments.	
N/A	§ 15.403	Adds new section to establish when credentials for ratings are required.	Requires mariners serving on vessels over 100 GRT to produce the appropriate credential for the position sought. This ensures consistency with the U.S. Code.
N/A	§ 15.404	Adds new section to provide the various endorsements required for service.	Explains specific endorsements required and covered under these manning requirements. This makes the regulations easier to follow.

E. Part 12 Re-numbering

Part 12, Requirements for Rating Endorsements, was largely rewritten to incorporate the rating requirements of the STCW Convention. In addition, the numbering of part 12 was changed to reflect the numbering of the remainder of 46 CFR subchapter B.

Below is a quick-reference table showing the subparts and sections of the previous part 12 that were renumbered, revised, and inserted into the new part 12.

Old reference	NPRM reference	New reference
Subpart 12.01:	Subpart A:	Subpart A:
§ 12.01–1	§ 12.101	§ 12.101
§ 12.01–3	§ 12.103	§ 12.103
§ 12.01–9	§ 12.105	§ 12.105
Subpart 12.02:	Subpart B/Others:	Subpart B/Others:
§ 12.02–7	§ 15.403	§ 15.401
§ 12.02–11	§ 12.201	§ 12.201
§ 12.02–17	§ 12.203	§ 12.205(c)
Subpart 12.03:	Subpart C:	Subpart D:
§ 12.03–1	§ 10.300 series	§ 10.400 series
Subpart 12.05:	Subpart D/Others:	Subpart D/F:
§ 12.05–1	§ 12.401	§ 12.401
§ 12.05–3	§ 12.412	§ 12.401
§ 12.05–3(c)	§ 12.420	§ 12.605
§ 12.05–7	§ 12.414	§ 12.403
§ 12.05–7(a)(5)	§ 12.420	§ 12.605
§ 12.05–9	§ 12.416	§ 12.405
§ 12.05–11	§ 12.418	§ 12.401
Subpart 12.10:	—Various—:	—Various—:
§ 12.10–1	§ 15.403	§ 15.401
§ 12.10–3	§ 12.610	§ 12.407
§ 12.10–5	§ 12.610	§ 12.407
§ 12.10–7	§ 12.414	§ 12.404
§ 12.10–9	§ 12.620	§ 12.617
Subpart 12.13:	Subpart F/Others:	Subpart F:
§ 12.13–1	§ 15.403	§ 12.619
§ 12.13–3	§ 12.640	§ 12.619
Subpart 12.15:	Subpart E/Others:	—Various—:
§ 12.15–1	§ 15.825	§ 15.401
§ 12.15–3	§ 12.510	§ 12.501
§ 12.15–3(c)	§ 12.510	§ 12.609
§ 12.15–5	§ 12.512	§ 12.501
§ 12.15–7	§ 12.514	§ 12.503
§ 12.15–7(c)	§ 12.530	§ 12.609
§ 12.15–9	§ 12.516	§ 12.505
§ 12.15–11	§ 12.518	§ 12.505
§ 12.15–13	§ 12.520	N/A (rating removed)
§ 12.15–15	§ 12.522	N/A (rating removed)
Subpart 12.25:	Subpart G/F:	—Various—:
§ 12.25–1	§ 12.702	§ 12.701
§ 12.25–10	§ 12.704	§ 12.703
§ 12.25–20	§ 12.706	§ 12.201
§ 12.25–25	§ 12.710	§ 12.705

Old reference	NPRM reference	New reference
§ 12.25–30	§ 12.720	§ 12.707
§ 12.25–35	§ 12.730	§ 12.709
§ 12.25–40	§ 12.740	§ 12.711
§ 12.25–45	§ 12.650	§ 12.623
Subpart 12.30:	Part 15–Subpt J:	N/A (combined with Subpart I):
§ 12.30–1	§ 15.1103 (d)	N/A
§ 12.30–5	§ 15.1103 (d)	N/A
Subpart 12–35:	Part 15–Subpt J:	Subpart I:
§ 12.35–1	§ 15.1103 (d)	§ 12.905
§ 12.35–1	§ 15.1103 (d)	§ 12.905
Subpart 12.40:	Subpart H:	Subpart H:
§ 12.40–1	§ 12.801	§ 12.801
§ 12.40–5	§ 12.803	§ 12.803
§ 12.40–7	§ 12.805	§ 12.805
§ 12.40–9	§ 12.807	§ 12.807
§ 12.40–11	§ 12.809	§ 12.809
§ 12.40–13	§ 12.811	§ 12.811
§ 12.40–15	§ 12.813	§ 12.813

VII. Discussion of Comments on the NPRM

The Coast Guard received more than 1,200 comments in response to the NPRM published on November 17, 2009. These comments consist of letters to the docket, remarks at the public meetings in Miami, New Orleans, Seattle, Washington, DC, and New York, and comments submitted by MERPAC. The following paragraphs contain an analysis of comments received and an explanation of any changes made in the rule as proposed.

Several comments noted grammatical and non-substantive errors in the NPRM. The Coast Guard has incorporated these comments, where appropriate, without further discussion.

Project Title

One commenter states that this rulemaking is incorrectly titled, introduced, and described. The commenter feels the title implies that the only changes are as a result of STCW and that there are many changes that seriously impact domestic vessels. The commenter says this project should be restricted to only STCW implementation or a correctly titled and described rulemaking should be republished.

The Coast Guard agrees that the title of this rulemaking project is no longer an accurate reflection of the changes being proposed, which include changes to domestic licensing. Accordingly, this SNPRM appropriately changes the title to include changes to domestic endorsements in addition to implementation of the 1995 STCW Amendments.

Applicability

Two commenters state that the STCW Convention requirements should be applied to mariners serving on all U.S. vessels on both inland and seagoing waters.

The Coast Guard disagrees. The STCW Convention applies to mariners serving on seagoing ships (except pleasure craft, fishing vessels, and ships entitled to sovereign immunity such as warships). Article II of the Convention defines a seagoing ship as a ship other than one that ''navigates exclusively in inland waters or in waters within, or closely adjacent to, sheltered waters or areas where port regulations apply.'' The provisions in this SNPRM which would implement amendments to the STCW Convention only apply to commercial vessels operating seaward of the boundary line, as specified in 46 CFR part 7. As stated in Article III of the STCW Convention, the Convention ''shall apply to seafarers serving on board seagoing ships entitled to fly the flag of a Party * * *''[1] Article II of the Convention defines ''seagoing ship'' as a ship other than those navigating exclusively in inland waters or waters within or adjacent to sheltered waters. The Coast Guard does not intend to apply strict international standards upon our domestic mariners in this regard. As such, the Coast Guard would apply the STCW provisions only to vessels operating beyond the boundary line.

Two commenters note that the preamble to the NPRM states ''* * *our entire scheme of licensing, testing, inspection and continued oversight for inland water and Great Lakes provides a level of safety equivalent to the STCW convention.'' The commenter asks why this thinking should not extend to vessels that sail beyond the boundary or on short, international voyages and therefore why the Coast Guard does not make those vessels exempt from the STCW provisions.

STCW is not applicable to inland waters. The Coast Guard has chosen not to extend STCW requirements to inland waters but recognizes that as a signatory to the Convention, we must ensure our rules are consistent with the requirements for ships on seagoing voyages. In accordance with Article I of the STCW Convention and as signatory to the Convention, the United States is obliged to give the Convention full and complete effect to ensure that, from the point of view of safety of life and property at sea and the protection of the marine environment, seafarers onboard ships are qualified and fit for their duties. Therefore, the Coast Guard is not able to exempt seagoing ships on the grounds that they operate on short international voyages.

Delay Implementation and Extend Public Comment Period

Ninety-two commenters request that the Coast Guard delay implementation of the NPRM because of the significant impact of the regulatory content on merchant mariners. Many of those commenters also request that the Coast Guard withdraw the NPRM and combine its contents with proposed regulations forthcoming as a result of the International Maritime Organization (IMO) 2010 amendments to the STCW Convention and Code, which were completed in June 2010. Many of these commenters also requested that the Coast Guard extend the comment period beyond the 90 days given in the NPRM.

The Coast Guard agrees and has decided to publish this SNPRM, which

[1] Article III lays out four exceptions to its application: ''(a) warships, naval auxiliaries or other ships owned or operated by a State and engaged only on governmental non-commercial service * * *; (b) fishing vessels; (c) pleasure yachts not engaged in trade; or (d) wooden ships of primitive build.'' International Convention on Standards of Training, Certification and Watchkeeping for Seafarers, 1978.

describes proposed changes from the NPRM published on November 17, 2009, and includes the new proposed regulations, which address the IMO 2010 amendments to the STCW Convention and Code. To accommodate requests for an additional comment opportunity, the Coast Guard has issued this SNPRM with a 60-day comment period.

Definitions

Two commenters state that in proposed § 10.107, the definition of ''Quality Standard System or QSS'' provides no guidance as to what training institutions in the field will be required to do.

The QSS requirements are contained in § 10.410. The provisions include: (1) Documentation that includes a quality policy and objectives and a quality manual; (2) internal audits; and (3) an external audit to be conducted by the Coast Guard.

One commenter asks how the Coast Guard determines whether a vessel's operating schedule is ''inappropriate'' in determining the length of a day, as described in the definition for ''day'' provided in the proposed § 10.107.

The Coast Guard will review vessel manning requirements and applicable laws and regulations to determine if the vessel is authorized to operate under a two-watch system. The Coast Guard will also review vessel operation schedule to determine if a 12-hour day is practiced.

One commenter writes that the Coast Guard's definition of ''coastwise voyage'' is unclear. The commenter asks if a vessel with such an endorsement would be permitted to attend a stacked MODU, or a MODU that is moving between locations on the U.S. Outer Continental Shelf, which is not engaged in Oil and Gas activities and is not considered to be a ''port or place in the United States'' for the purposes of Customs laws.

Such a vessel would be considered to be on a coastwise voyage if the vessel, prior to attending the MODU, departed from, and returns to, a port in the United States or its possessions.

Twenty-one commenters remark that the definition of ''chief mate'' describes precisely the role and responsibility of a mate on a vessel that is permitted to work a two-watch system, yet the person serving in that position may not be required to hold an endorsement as chief mate. The commenters feel any requirement for service as chief mate will be impossible to meet on vessels that have no manning requirement for a chief mate. The commenters recommend that the phrase ''and who holds a valid officer endorsement as chief mate'' be deleted.

The Coast Guard agrees with the proposal and has made this revision. However, if a mariner, serving as a chief mate onboard a vessel that is not required to have a chief mate, wants sea service credit, he or she must provide proper documentation.

One commenter writes that the definition of ''horsepower'' should be clarified.

The Coast Guard agrees and has revised the definition to read: ''Horsepower or HP means, for the purpose of this subchapter, the total maximum continuous shaft horsepower of all of the vessel's main propulsion machinery as determined by the manufacturer. This term is used when describing a vessel's propulsion power and also when placing limitations on an engineer officer license or endorsement. One horsepower equals 0.75 kW.''

Six commenters interpret the definition of ''first assistant engineer'' as requiring the second in charge of the engine department to hold a first assistant engineer endorsement, thereby creating a de-facto manning requirement that does not fit smaller vessels.

The Coast Guard agrees and has revised the definition to say: ''First assistant engineer means the engineer officer next in rank to the chief engineer and upon whom the responsibility for the mechanical propulsion and the operation of maintenance of the mechanical and electrical installation of the vessel will fall in the event of the incapacity of the chief engineer.''

Three commenters state that the term ''near-coastal'' is defined as waters off the U.S. not more than 200 miles offshore, but the definition of ''international voyage'' includes the words, ''territories of the U.S.'' The commenters feel it would be useful to have a better description of what the waters of the U.S. are, and whether they include Puerto Rico, Guam, Saipan, and the U.S. Virgin Islands for the purposes of defining routes on a credential.

The Coast Guard recognizes that these two definitions, which were included in the NPRM, have caused confusion; therefore, we have decided to retain in the SNPRM only a definition for near coastal voyages. The definition has been clarified to preserve the intent of Regulation I/5 of the STCW Convention, which states that individual governments may establish their own near-coastal provisions. Near-coastal means ocean waters not more than 200 miles offshore from the U.S. and its territories.

Four commenters comment that the definition of ''OICEW'' includes DDE and defines it as ''operational level,'' but the wording of § 15.915(a)(2) gives the designated duty engineer (DDE) authority as chief on certain seagoing vessels. Moreover, the commenters remark that the definition of ''DDE'' says they may serve as the sole engineer, which implies authority as a chief engineer. The commenters assert that the definitions need to be revised to make them consistent with the other provisions of § 15.915. The commenters suggest that we provide a different endorsement wording for DDE credentials that carry chief engineer authority on seagoing vessels, such as ''chief engineer on vessels of not more than 500 GRT.''

The Coast Guard concurs with the comments. The STCW officer endorsement provisions in this SNPRM take the commenters' views into consideration and clearly state for which STCW endorsements the DDE is eligible. It also notes that DDE endorsements will be limited to 500 GRT in addition to a particular horsepower limitation.

One commenter states that the definition of ''second engineer officer'' is an STCW term equivalent to the U.S. endorsement as first assistant and that the Coast Guard should make that clear.

This SNPRM contains definitions for both domestic first assistant engineer endorsement and the STCW second engineer officer endorsement. Although they both belong to different endorsement schemes, it can be readily seen that they are roughly equivalent in their respective systems.

Two commenters recommend amending the definition of ''seagoing service'' to be aligned with the intent of the STCW Convention and therefore less restrictive than current Coast Guard interpretation. Seagoing service can include all service aboard appropriate vessels, whether beyond the boundary line or not, particularly for those vessels that do not operate exclusively on inland waters or sheltered waters.

The Coast Guard agrees and has adopted the STCW definition of seagoing service.

One commenter says sea service should be defined in § 10.107 in such a way that BST renewals would not require 1 year of seagoing service during the last 5 years.

The Coast Guard disagrees. As mandated by the 2010 amendments to the STCW Convention and Code, the Coast Guard will not only require 1 year of seagoing service, but it will also require the applicant to provide evidence of meeting the standard of competence for those parts of BST that cannot be safely or reasonably

completed onboard a vessel during the 12 months of seagoing service.

Four commenters state there is no sound reason to limit qualifying service for STCW endorsements to service exclusively gained beyond the boundary line or to limit qualifying service based upon geographic location.

The Coast Guard agrees, and the proposed definition for ''seagoing service'' in this SNPRM would accept service on the Great Lakes and inland waters.

One commenter suggests that we amend the definition of ''designated duty engineer'' (DDE) to recognize the typical manning of towing vessel engine rooms because a great majority of engine rooms on towing vessels are automated, but not to specific Coast Guard or ABS standards for ''unattended engine'' rooms. The commenter suggests that the Coast Guard either modify the definition of DDE to explicitly allow service on towing vessels or provide guidance on what constitutes a ''periodically unattended engine room'' that is specific to the operations and characteristics of towing vessels.

The definition of ''DDE'' would allow the engineer to sail on towing vessels under current regulations for uninspected vessels. The term ''periodically unattended'' is not meant to be an official term designating Coast Guard or American Bureau of Shipping (ABS) compliance, but a general expression of a machinery space where constant conventional watches are not stood.

Ten commenters disagree with the definition of ''domestic voyage'' and, when coupled with NVIC 7–00, believe it would exclude U.S. flag workboats from operating outside U.S. waters since most crewmember credentials are for near-coastal or near-coastal domestic voyages.

The definition provided in the NPRM for ''domestic voyage'' represents a universally accepted method of defining domestic voyages. Regulation I/3 of the STCW Convention provides that each Administration sets its own near coastal limits, and allows for the use of near-coastal endorsements in other Administrations' waters provided those Administrations determine that the near-coastal endorsements are equivalent to their own.

Eight commenters expressed belief that the definition of ''international voyage,'' when coupled with NVIC 7–00, would exclude workboats from operating outside U.S. waters since most workboat mariner credentials are for near-coastal or near-coastal, domestic routes.

The definition of ''international voyage'' has been removed. The near-coastal domestic restriction on credentials is intended for use in waters over which the United States has authority. While a near-coastal STCW endorsement does not preclude its use in another Administration's near-coastal waters, that endorsement is limited to the near-coastal waters as determined and accepted by the local administration.

One commenter says the Coast Guard needs to add a definition for ''Great Lakes voyage,'' and without this definition, this type of voyage may be considered an international voyage and could impose additional crew requirements when making stops in Canada.

The Coast Guard disagrees with the comment. It is unnecessary to define a Great Lakes voyage, as this is already a route established on credentials.

Two commenters suggest removing the definition of ''competent person'' from § 10.107 and place the term within the applicable sections in Part 13.

The Coast Guard agrees and has made this change.

One commenter states the definition of ''tankship'' is confusing and incomplete and recommends adding to the end of the proposed definition, ''excluding an Offshore Supply Vessel as defined in 46 U.S.C. 2101.''

The Coast Guard disagrees. This is an existing definition. This definition only applies for the credentialing of seafarers and is not applicable to vessels.

Two commenters disagree with the inclusion of ''those waters specified in 33 CFR 89.25'' in the definition of ''Western rivers.''

The Coast Guard has reformatted this definition to include a numbering system to the different sections of the Western rivers. The reference to 33 CFR 89.25, as well as the remainder of the definition remains unchanged from existing text.

One commenter asks the Coast Guard to include a definition for the term ''barge.''

The Coast Guard agrees, and has included a definition in § 10.107.

One commenter asks that the definition of ''disabled vessel'' be modified to add the following: ''[t]his includes, but is not limited to, a vessel that needs support or aid from another vessel (or vessels) to achieve completion of a maneuver or a portion of a transit safely, or when vessel safety is at risk such as mechanical difficulty, weather conditions, port/waterway congestion, or vessel maneuvering constraints.''

The Coast Guard agrees and has amended the definition of ''disabled vessel'' to include the commenter's suggestion.

One commenter asks that the definitions of ''on location'' and ''underway'' be revised to consider the advent of MODU's dynamic positioning capability. Specifically, they recommend the following definition for ''on location'': ''On location means that a mobile offshore drilling unit is bottom bearing, moored with anchors placed in the drilling configuration, or, when utilizing dynamic positioning, is maintaining station at the drilling location.'' For ''underway,'' the commenter recommends the following: ''Underway means that a vessel is not at anchor, made fast to the shore, or aground. When referring to a mobile offshore drilling unit (MODU), underway means that the MODU is not bottom bearing, moored with anchors placed in the drilling configuration, or in laid-up status. It includes those periods of time during which a MODU is deploying or recovering its mooring system or when it is utilizing its dynamic positioning system.''

The Coast Guard disagrees that we can or should change these definitions. The International Regulations for Prevention of Collisions at Sea (COLREGS) and the Inland Navigation Rules define ''underway'' as ''not at anchor, or made fast to the shore, or aground.'' The COLREGS are incorporated in Chapter 30 of Title 33 of the U.S. Code and implemented via 33 CFR part 81. The Inland Navigation Rules are incorporated in Chapter 34 of Title 33 of the U.S. Code and implemented via 33 CFR part 83. A vessel using dynamic positioning to drill or conduct production operations would be considered ''underway'' under those rules. Even if we could alter these definitions, doing so would be beyond the scope of this rulemaking project.

Two commenters assert that the definitions for ''dual mode ITB,'' ''ITB,'' and ''push mode ITB'' should reflect current industry practices and include reference to Articulated Tug Barge units (ATBs). The commenter recommends that sea time on ATBs be credited based upon the combined tonnage of the tug and barge unit when connected through articulated means.

The Coast Guard agrees in part and has added a definition for ATB: Articulated Tug Barge or ATB means any tug-barge combination which through the use of an articulated or ''hinged'' connection system between the tug and barge allows movement in one axis, or plane in the critical area of fore and aft pitch. Definitions for the other configurations remain unchanged from the NPRM. Furthermore the Coast

Guard amended the service requirements to provide credit for service on ATBs.

Implementation of the Training Requirements and Grandfathering Provisions

Forty-four commenters express concern about the time it will take to implement the training requirements in the NPRM.

The Coast Guard recognizes the potential problems associated with the time it will take to implement the training requirements and has included a 5-year transitional period for the implementation of the requirements. This SNPRM provides transitional and grandfathering provisions consistent with the 2010 amendments to the STCW Convention. The 2010 amendments to STCW come into force on January 1, 2012. However, STCW Regulation I/15 on transitional provisions, allows requirements to come into effect over a 5-year period in order to avoid disruption to the maritime industry. STCW Regulation I/15 also provides that a Party may continue, until January 1, 2017, to issue certificates (in the U.S., this would be the MMC) in accordance with the credentialing rules it has in place before the 2010 amendments come into force (January 1, 2012) only with respect to seafarers who begin their sea service or their approved maritime training before July 1, 2013. Candidates who begin their sea service or their approved maritime training on or after July 1, 2013 will be subject to the full application of the revised STCW requirements. The Coast Guard has drafted this SNPRM to allow for this phase-in process. These provisions require any seafarer who holds an STCW endorsement prior to January 1, 2012, to provide evidence of meeting the appropriate standard of competence for the applicable STCW endorsement by January 1, 2017.

Domestic requirements provided in this proposed rule will be transitioned during a 5-year period (after the effective date of the final rule) to coincide with the renewal of existing domestic endorsements. Individuals seeking an original endorsement or raise of grade during this period, and who begin training or service before January 1, 2012, need only meet the requirements in place before that date. Those individuals who start training or service on or after January 1, 2012, must meet all provisions described in the final rule.

Separation of STCW and Domestic Endorsements

Thirty commenters express the feeling that, in order to remove confusion, the Coast Guard needs to separate the domestic standards from the STCW standards.

The Coast Guard agrees and, in this proposed rulemaking, has clearly separated the two schemes for the STCW and domestic endorsements. For STCW endorsements, this proposed rulemaking incorporates the sea service and training requirements from the STCW Convention and Code to ensure consistency and clarity. In addition, the Coast Guard has provided entry paths from each domestic endorsement to the equivalent STCW endorsement.

Methods for Demonstrating Competence

Sixty-four commenters object to the Coast Guard requiring formalized training as the sole method of proving competency in order to obtain an STCW endorsement.

The Coast Guard agrees. This SNPRM proposes to allow different methods for demonstrating competence as permitted by the STCW and appropriate to each individual competency. This will allow the preservation of a ''hawsepipe'' program, which allows the use of practical experience to demonstrate competence, and foster career paths that were not provided for in the previous NPRM.

One commenter notes many mariners may not obtain their seagoing experience in an organized progressive sequence, such as that provided by maritime academies. By not allowing sea time from prior service to be credited toward upgrades or endorsements, the Coast Guard prevents ''hawsepipe'' mariners from using their considerable and valuable experience to progress in their careers.

The Coast Guard recognizes the benefits of a ''hawsepipe'' process for the creation of licensed mariners. This SNPRM provides multiple methods of demonstrating competence, which should ensure the continued existence of this process.

Creditable Service on Great Lakes and Inland Waters

Ten commenters request that the Coast Guard grant day-for-day credit for applicants providing service on Great Lakes and inland waters. The commenters state that a large portion of the skills and assessments which STCW requires for its endorsements overlaps with the skills and techniques these officers are currently using as deck officers on the Great Lakes and inland waters.

The Coast Guard agrees and in this SNPRM proposes to grant sea service on other than ocean waters for STCW endorsements as follows: Those serving on Great Lakes waters will receive day-for-day credit; and those serving on inland waters will receive 1 day of ocean service credit for every 2 days of service for up to 50 percent of the total service. Given the wide variety of ship operations and career patterns in United States waters, and the movement of personnel from one segment of industry to another, we have found it appropriate to take into account the interchangeability or transferability of skills and experience when candidates apply for a credential. The service from experience obtained in the Great Lakes most closely resembles the knowledge and skill which are required for operating a seagoing ship. Service in inland waters does not always resemble operating a seagoing ship. However, the Coast Guard recognizes that many of the inland navigable waters are of such length and/or breadth that they have the characteristics of ocean or near coastal waters.

Creditable Service for Sailing School Vessels

Ten commenters recommend that the Coast Guard grant one and one-half days sea service credit for every day served on sailing school vessels. The commenter recommends recognizing the special operations of sailing school vessels in the practice and training of seamanship.

As part of an approved program, the Coast Guard may grant additional credit for service on vessels if that program is shown to exceed the experience normally received during the same number of days on a commercial vessel that is not part of a program and merits such credit. The Coast Guard will not grant this credit outside of an approved program.

Seagoing Service

One commenter writes that the endorsement for 200 GRT/500 GT near-coastal mate (for international voyages) will require 3 years of sea time for an original issue, which the commenter notes is three times longer than the current requirement. The commenter feels the Coast Guard needs to establish an appropriate level of training for small vessels that is appropriate for the duty on these vessels. The commenter suggests the current 1-year sea service requirement should be retained.

The Coast Guard agrees with the comment and has amended § 11.321. Seafarers holding a domestic endorsement as mate near coastal of less

than 200 GRT/500 GT may qualify for an STCW endorsement as OICNW of less than 200 GRT/500 GT with 6 months of sea service under the authority of the domestic endorsement. This provision is consistent with Regulation II/3, paragraph 4 of the STCW Convention.

Three commenters note that proposed § 11.430(e) requires applicants for officer endorsements with a tonnage limit over 200 GRT/500 GT to have qualification as an able seaman. In light of the fact that many applicants will have qualifying service on vessels not required by law to carry able seamen, the commenters believe this provision serves as either a barrier to entry or an unnecessary step and recommend dropping it as a prerequisite.

The Coast Guard has removed the requirement to qualify as able seaman from the requirements to obtain this domestic endorsement.

One commenter opposes not allowing service as a rating to count toward a management-level certificate. The commenter feels this unfairly penalizes mariners who have had to sail as a rating rather than as an officer because of current economic conditions.

This SNPRM continues to accept service as a rating towards renewal of a management-level endorsement. However, it would not be appropriate to allow rating or unlicensed service to be creditable towards an upgrade to a management-level endorsement. The STCW requirements for management-level endorsements specify the minimum amount of service to be accrued while serving under the authority of an operational level credential. For example, to qualify for a master and chief mate on vessels of 3,000 GT or more (Regulation II/2), it requires that the candidate meets the OICNW requirements and have 12 months approved seagoing service in that capacity.

Tonnage Limitations and Qualifying Service

Eighty-three commenters suggest the Coast Guard lower the minimum vessel tonnage threshold for qualifying experience for STCW endorsements.

The Coast Guard is adopting the STCW language for seagoing service, which allows us to accept service appropriate to the credential sought, regardless of the tonnage. The domestic officer endorsement requirements will not be changed.

Twenty-two commenters suggest expanding the table of tonnage equivalents to assist in determining qualifying service. The commenters believe this will permit reasonable benefit for mariners serving aboard limited tonnage seagoing vessels who are seeking qualified seagoing service relevant to the issues of certification and qualification for STCW endorsements.

As mentioned above, the Coast Guard is adopting the STCW language for seagoing service, which allows us to accept service appropriate to the credential sought, regardless of the tonnage. In addition, the Coast Guard has removed the tonnage equivalency table because of its potential to generate confusion.

One commenter states that the proposed rulemaking would require changes to the United States Code (U.S.C.), particularly to 46 U.S.C. subtitle II, part J, chapter 143 on ''Convention Measurement.'' Chapter 143 implements the provisions of the International Convention on Tonnage Measurement of Ships.

The NPRM and the current SNPRM do not alter the underlying law affecting how tonnage is measured. The Coast Guard has also removed the tonnage equivalency table. It should be noted that the equivalent measurements are now being retained only for STCW endorsements at the 200 GRT/500 GT and 1,600 GRT/3,000 GT levels.

Two commenters raise concerns regarding placement of tonnage limitations on unlimited tonnage licenses when the applicants fail to provide the service required within the regulations.

The Coast Guard notes that this has existed for many years and that the NPRM did not propose to change this provision. Current regulations provide, and we will retain authority, for the Coast Guard to place limitations on domestic officer endorsements when an applicant does not present sufficient evidence of service on vessels over 1,600 GRT/3,000 GT.

Two commenters write that master or mate on vessels of less than 1,600 GRT/3,000 GT upon oceans appears to be the only lower-level option for an ocean-endorsed license for international voyages. The commenters think this severely discriminates against mariners and vessels of the smaller tonnages who wish to sail upon ocean routes to foreign destinations.

The Coast Guard agrees and will retain a credentialing regime that will provide for persons serving on vessels of smaller tonnage on ocean routes.

Military Sea Service

Three commenters remark that, while the military, especially the Navy, is a good source of experienced members with a good work ethic, individuals that cross over from the military should be deemed proficient with some form of testing to keep the standards of the U.S. merchant marine elevated.

The Coast Guard agrees and has added provisions for military members with qualifying sea service to obtain a domestic or STCW endorsement at either the operational or management level after satisfactory completion of the appropriate training and assessments, in accordance with the STCW Code. The provisions for ''sea service as a member of the armed forces'' were moved to proposed § 10.232.

One commenter asks if a military petty officer who qualified as engineering officer of the watch can qualify for an endorsement as QMED oiler and/or RFPEW. However, see our response above regarding new provisions for military members.

In evaluating a mariner's qualifications, we consider the unique qualifications of the applicant. As such, we are unable to provide a definitive response to this situation based on the information provided.

Foreign Sea Service

Four commenters request that the Coast Guard accept service on foreign flag vessels to establish recency for license or endorsement renewals.

The Coast Guard agrees and has added new § 10.232 to address this topic and to accept this type of sea service for original, renewals, and raise-in-grade of endorsements.

International Voyages

One commenter notes that the NPRM adds additional endorsements for officers on seagoing ships (Medical PIC/Medical first-aid provider). The commenter asks if these endorsements are required only when operating on international voyages or if it will include domestic and Great Lakes voyages if the vessel is considered a seagoing vessel by definition and allowed to proceed beyond the boundary line on its Certificate of Inspection.

The medical first-aid provider endorsement and person in charge of medical care endorsement are STCW endorsements available to both officer and ratings positions. Except as provided in the requirements for OICNW and OICEW, neither of these endorsements is mandatory unless the person has been designated by his or her employer to act in one of those capacities.

Domestic Near-Coastal Voyages

Three commenters state that NPRM § 11.401(a)(10) says that 200 GRT masters/mates on near-coastal routes

must meet Regulation II/3 of the STCW Convention, but that the footnotes (as well as the first sentence) appear to exempt those vessels.

Proposed § 11.301(j) provides that masters, mates, or engineers endorsed for service on seagoing vessels of less than 200 GRT/500 GT (other than passenger vessels subject to subchapter H of this chapter) are entitled to hold an STCW endorsement corresponding to the service or other limitations of the license or officer endorsements on the MMC. These vessels are not subject to further obligation under the STCW because of their special operating conditions as small vessels engaged in domestic, near-coastal voyages.

Five commenters state that there are a number of exceptions and exemptions that have been issued by local Captains of the Port (COTP) for vessels on short international voyages, allowing voyages to Canadian, Bahamian, British Virgin, and Mexican waters, and assert that the Coast Guard should determine how these exemptions will be affected by these changes.

The Coast Guard recognizes the variances that were issued by the local COTPs to address individual operational needs. These variances have been incorporated into the regulations to the extent possible consistent with the STCW Convention. Therefore, exemptions issued by the OCMI/COTP will no longer be valid. In the future, any additional variances will need to be consistent with the regulations found in subchapter B of 46 CFR.

Four commenters recommend that proposed § 11.463(d) make clear that the authority to make a near-coastal international voyage be included in the endorsements in §§ 11.423 and 11.424, as well as by a 500 GRT master/mate credential issued based on service obtained prior to the effective date.

46 CFR 11.301(j) (of the SNPRM) allows for an STCW and officer endorsement as master or mate of self-propelled seagoing vessels of less than 200 GRT/500 GT limited to near-coastal waters, including masters and mates of towing vessels, to be valid for service on self-propelled, seagoing vessels engaged on international voyages, and on passenger vessels of 100 GRT/250 GT or more on domestic, near-coastal voyages.

One commenter states the small passenger vessel exemption in the existing text of § 15.105 should not change.

We have kept the exemption for small vessels and have retained the provisions restricting such exemptions to waters over which the U.S. has jurisdiction in 46 CFR 15.105. One commenter requests that the Coast Guard add the St. Lawrence Seaway and the St. Lawrence River to the list of waters exempted in § 11.202(d)(4).

These waters are not seaward of the boundary line. Therefore, STCW is not applicable to them and no exemption is needed.

One commenter states that limiting OUPVs to domestic voyages has a considerable impact with no return on the cost and that a near-coastal OUPV can travel 100 miles out to sea. The commenter notes that this distance is well into the Bahamian waters from the U.S. and that from the Virgin Islands, a mariner can easily reach a number of other countries.

The Coast Guard notes that the STCW Convention does not allow mariners with OUPV endorsements to serve on vessels on international voyages.

Deck Officer Endorsements

Seventy-three commenters disagree with the Coast Guard's stated intention to stop issuing original domestic endorsements for deck officers serving on vessels of not more than 500 GRT/1,200 GT. The commenters state that requiring applicants to comply with the requirements to obtain an endorsement for service on vessels of more than 1,600 GRT/3,000 GT was excessive for the smaller vessels.

The Coast Guard agrees and will continue to issue original endorsements for deck officers serving on vessels of not more than 500 GRT. However, mariners need to be aware that STCW requirements for all deck officers serving on vessels of 200 GRT/500 GT or more are the same; that is, there are no additional tonnage breakpoints. To address the breakpoint differences between the STCW endorsements and the domestic endorsements, the Coast Guard has included entry paths (both operational and management) for deck officers serving on vessels of not more than 500 GRT into the STCW endorsements for officers serving on vessels of 1,600 GRT/3000 GT.

Several of these commenters also express concern that the Coast Guard intends to do away with the endorsement for officers serving on vessels of not more than 200 GRT/500 GT.

The Coast Guard has not proposed the elimination of this endorsement, and it will be retained.

Seventeen commenters object to the proposed provisions of § 11.404, which would allow third mates with 36 months of service on self-propelled seagoing vessels to advance directly to master after completing the training, education, and assessment requirements.

This path was intended for progression under the STCW Convention; that is, when progressing from OICNW to master on seagoing ships. Since the Coast Guard's goal is to harmonize its requirements for mariners serving on seagoing ships with the STCW requirements and not impose stricter requirements on U.S. mariners, this proposed method of advancement will be retained in this SNPRM.

Five commenters note that the proposed § 11.407(a)(1) requires an applicant to hold an STCW endorsement as RFPNW as a component of the qualification standards for a deck officer endorsement. The commenters recommend deleting that provision as the qualification provisions for OICNW in STCW do not mention RFPNW.

The Coast Guard agrees and has removed the requirement that OICNW applicants must hold an endorsement as RFPNW. Mariners who hold an OICNW endorsement wishing to obtain the RFPNW endorsement will have to meet the requirements for RFPNW.

One commenter asks if there is an endorsement for OICNW for service on vessels of less than 200 GRT/500 GT engaged in ocean service.

All seagoing vessels operating beyond the boundary line are subject to the STCW Convention. Vessels of less than 200 GRT/500 GT are not subject to any further obligation under the STCW because of their special operating condition as small vessels engaged in domestic trade. Therefore, persons serving on seagoing vessels of less than 200 GRT/500 GT operating beyond the boundary line will be issued an STCW endorsement corresponding to the service and limitation of the domestic officer endorsement without any further obligation.

One commenter notes that proposed § 11.413 does not have a service requirement for chief mate of ocean and near coastal vessels of less than 1,600 GRT/3,000 GT, implying that a person could qualify for this endorsement by meeting the OICNW requirement and completing management-level training.

The Coast Guard has corrected this oversight by adding a requirement for 12 months of service as mate before advancing to chief mate.

Two commenters recommend removing certain training topics at the management level from the proposed § 11.413(b) list of training topics because the associated competencies were acquired by mariners at the operational level.

The Coast Guard recognizes that certain management competencies may have been acquired by the mariner at the operational level; therefore the Coast

Guard is changing the approach to implementing the STCW competency requirements to ensure assessment of competence is in accordance with the level of proficiency required for each level. All the lists of training topics for all STCW requirements were removed from this SNPRM. Applicants for an STCW endorsement will be required to meet the standards of competence in the STCW Code for the appropriate endorsement. The Coast Guard will accept the various methods included in the STCW Convention for meeting the standards of competence, including training, on-the-job training, in-service experience, etc. All approved training courses and programs meeting the various standards of competence must include topics in accordance with the level of proficiency required for each level.

Two commenters state the requirement in proposed § 11.412 for service as chief mate to acquire a master 1,600 GRT/3,000 GT oceans/near-coastal license should be deleted because towing vessels and many small seagoing vessels do not have a position as chief mate.

The requirements in § 11.412 were removed from this SNPRM, since the Coast Guard revised the approach to implement the STCW Convention requirements by separating the domestic requirements from the STCW requirements. This revised approach provides entry paths from domestic endorsements to STCW endorsements in order to ensure career progression. For example, a mariner with a Master Towing vessel ocean or near coastal endorsement may qualify for an STCW endorsement as chief mate on vessels of 1,600 GRT/3,000 GT or more by completing 12 months of sea service; meeting the standard of competence in Section A–II/2; and completing training in search and rescue, ARPA (if required), GMDSS (if required), and management of medical care.

Eight commenters state that §§ 11.423 and 11.424 provide a way for an individual to receive an endorsement for international voyages on vessels under 200 GRT/500 GT, but the proposed process is so lengthy, difficult, and costly to qualify for these endorsements, the provision is of limited value.

The requirements in § 11.423 and 11.424 were removed from this SNPRM since the Coast Guard revised the approach to implement the STCW Convention requirements. The revised approach includes: (1) Accepting seagoing, Great Lakes and inland service to qualify for the endorsement; (2) accepting other methods, besides training, for meeting the standard of competence; and (3) requiring some training that is necessary for the credential.

One commenter remarks there should be an endorsement for OICNW on vessels of less than 1,600 GRT/3,000 GT.

The STCW Convention does not provide for an OICNW endorsement for service on vessels of 200 GRT/500 GT or more and less than 1,600 GRT/3,000 GT. The STCW OICNW endorsement is divided between vessels of less than 200 GRT/500 GT and those above. However, the Coast Guard is providing a path for the domestic endorsements as mate, ocean or near coastal, less than 1,600 GRT/3,000 GT and for mate, ocean or near coastal, not more than 500 GRT.

One commenter notes that § 11.414 appears to offer no provision for an ocean endorsement at the operational level for limited tonnage vessels of less than 200 GRT/500 GT.

Section 11.319 in this SNPRM proposes a provision for an endorsement at the operational level for mariners serving on seagoing vessels of less than 200 GRT/500 GT.

Three commenters write that any new credentialing structure must include oceans endorsements for officer endorsements of all tonnages.

The Coast Guard agrees with the comment. This proposed rulemaking has taken this into account and provides for the credentialing for vessels of all tonnages.

One commenter states that STCW regulations require a candidate for OICNW to obtain one year of approved seagoing service as part of an approved training program. Otherwise, mariners pursuing OICNW qualification are required to obtain three years of approved seagoing service in addition to numerous required training courses for certification. The commenter recommends that the Coast Guard re-balance these requirements for OICNW for limited-tonnages. The commenter also recommends that the Coast Guard permit OICNW certification for qualified mariners who obtain 2 years of approved seagoing service in concert with the completion of a combination of in-service training, practical assessment, and approved seagoing service. The commenters believe that this type of hybrid program could achieve the necessary standards of competency and provide the KUP for the OICNW qualification.

The Coast Guard disagrees. STCW allows for two methods of qualifying for OICNW, either completion of an approved program with one year of service, or three years outside of an approved program. A hybrid program as suggested is not authorized in the STCW in relation to approved seagoing service. However, the hybrid program may be used to meet the required standard of competency.

One commenter asks if those with operational deck officer endorsements wishing to renew will be required to take management-level courses.

No. The requirement to complete management-level courses is only applicable for original endorsements at the management-level.

One commenter suggests that mariners with a master 1,600 GRT/3,000 GT near-coastal or ocean endorsement have the opportunity to progress directly to the unlimited tonnage master endorsement after completion of courses, assessments, and testing with 3 years of service, with at least half of the time on vessels of 1,500 GRT or 2,500 GT ITC.

This rulemaking has provided a path from master limited to master unlimited through evidence of completing 6 months of sea service under the authority of the limited endorsement, and any assessments, training, and/or examinations not previously completed.

Engineering Officer Endorsements

Three commenters note that, in Table A–III, Sections 1–4 of the STCW Code, there is language allowing for near-coastal limitations, but not mandating it.

The formerly proposed 10,000 HP near-coastal domestic endorsement has been removed in this SNPRM, and the Coast Guard will retain the current system of domestic engineering endorsements. The Coast Guard has added the option of restrictions if an applicant is not able to complete performance measures for steam evaporators and auxiliary/waste heat boilers since an STCW party may vary the requirements for the near-coastal KUPs for all STCW engineering endorsements.

Five commenters recommend removing geographic limitations from engineering licenses. The commenters believe that §§ 11.510 through 11.514 impose near-coastal limitations on various engineering licenses at the 10,000 HP and 4,000 HP levels.

The Coast Guard is considering this and is seeking further public comment on this issue.

Three commenters point out that STCW language requires that a candidate for OICEW must obtain 30 months of training, which includes onboard training documented in an approved training record book, but perceives that proposed § 11.950(b) does not allow for this onboard training.

As a result of the 2010 amendments to the STCW, the 30-month requirement has been eliminated to bring the deck and engine requirements in line with each other. Program approval will be based on content and must include not less than 6 months approved seagoing service in the engine department as specified in Regulation III/1 of the STCW Convention.

Three commenters note that proposed § 11.501(j)(1) provides that holders of engineer (limited) and DDE endorsements can ''continue to serve under the authority of those credentials until first renewal * * *.'' The commenters recommend that, in order to ensure that future readers understand what authority is being continued, the Coast Guard change those words to read as follows: ''Continue to serve on those credentials with the authority that was in force under the rules in effect prior to the effective date until the * * *. ''

The Coast Guard agrees, and has amended the text in §§ 11.301 and 11.323, accordingly, in this SNPRM.

One commenter states that the training requirements to obtain a motor engineer license/endorsement should include all equipment that may be found on a vessel.

The Coast Guard disagrees and believes that this would be unnecessary and excessively burdensome. In many cases, mariners sail only on vessels without steam evaporators or waste heat/auxiliary boilers and do not have the opportunity to access this equipment. In this case, a corresponding restriction will be placed on the mariner's credential. Should a mariner wish to remove the restriction(s), he or she would be required to perform the demonstration on a vessel that carries that equipment.

One commenter seeks clarification on the three DDE horsepower levels and the waters on which they authorize service.

DDEs limited to 1,000 HP and 4,000 HP may sail only on inland and near-coastal waters. STCW endorsements are needed at either horsepower level if the endorsement holder wishes to sail near-coastal. DDE unlimited horsepower endorsement holders may sail upon any waters and require STCW endorsements for near-coastal and ocean voyages.

Twelve commenters offer various opinions on the NPRM's proposed 10,000 HP domestic engineer officer endorsement, along with suggestions for revised training and areas of competency demonstration.

The NPRM's proposed provisions for 10,000 HP credentials have been removed from this SNPRM. The main propulsion power level is included in the unlimited horsepower category. Training and sea service requirements are, therefore, the same for the unlimited path, as well as for all five of the STCW engineer officer endorsements. This SNPRM splits the engineer requirements into the § 11.300 series for STCW endorsements and into the § 11.500 series for domestic endorsements.

One commenter states that engineers holding DDE or limited tonnage endorsements would be restricted to domestic voyages.

This SNPRM provides, in parts 11 and 12, information on entry points for domestic mariners to be eligible for an STCW endorsement. Additionally, this SNPRM incorporates the changes proposed in the comprehensive review of the STCW, adopting the 2010 amendments that make the requirements for engineering qualification similar to those for deck officers. This will result in a process which does not require the 30 months of training that had been proposed in the NPRM. As a result, this will impose less burden on these engineers.

One commenter points out that an engineer on a small passenger vessel will be the sole engineer crew member on the vessel and that requiring the mariner to first sail as an RFPEW is an unreasonable burden.

It is impractical to issue an officer endorsement for any HP or tonnage level without the candidate having had some sailing experience at a lesser, non-officer capacity. Unless the small passenger vessel fleet, and other one-engineer-per-boat fleets open entry-level positions to train their future engineer officers, the only source for these officers will be either the maritime academies or those transferring from other fleets.

Four commenters remark that proposed § 15.820 would create unnecessary manning requirements for a chief engineer where none exist today and suggest adding, at the end of paragraph (a), the words ''on international voyages.''

The Coast Guard has decided to retain the existing text for § 15.820 with some additional non-substantative changes. The manning requirements remain unchanged.

Two commenters do not support the Coast Guard's proposal to stop issuing STCW endorsements for DDE.

The STCW defines DDE differently than in current regulations. In the U.S., DDE means an engineer on a vessel not more than 500 GRT and is issued in three propulsion power levels: 1,000, 4,000 and any horsepower. STCW defines DDE as the person designated to perform duties in a periodically unmanned engine room. The Coast Guard does not intend to remove the three current DDE endorsements from our domestic structure. However, if a mariner holding a domestic DDE wishes to be qualified to sail on a vessel of unlimited horsepower of not more than 1,600 GRT/3,000 GT, he or she must obtain endorsements as assistant engineer-limited and chief engineer-limited.

One commenter states that the proposed language found in §§ 15.820 and 15.825, establishing that only seagoing vessels more than 200 GRT/500 GT are required to carry licensed engineers, must be retained. The commenter believes that such a requirement should not be imposed upon seagoing towing vessels of less than 200 GRT/500 GT.

The Coast Guard agrees. The proposed §§ 15.820 and 15.825 are essentially unchanged. The manning requirements likewise remain unchanged.

One commenter writes if unlicensed personnel are voluntarily assigned to stand engine room watches on seagoing towing vessels operating beyond the boundary line, § 12.530 will require them to hold RFPEW. The commenter recommends that the same tonnage limit of 200 GRT/500 GT stated in proposed §§ 15.820 and 15.825 be included.

Proposed § 12.609 contains the requirements for the RFPEW endorsement. The manning requirement for which vessels must carry such a credentialed person are found in the current regulations at § 15.1103(c).

One commenter recommends that the Coast Guard consider the DDE endorsement as equivalent to the chief engineer endorsement on towing vessels of less than 200 GRT/500 GT engaged in international voyages.

DDEs are authorized to sail as chief engineers on international voyages, but only unlimited DDEs are authorized to sail as chief engineers on international voyages (other than near-coastal), provided they hold an STCW endorsement as chief engineer.

Two commenters recommend that the Coast Guard allow credit for QMED service toward a chief engineer officer endorsement. One commenter recommends that § 11.506 be revised to allow sea service time as a QMED to be credited toward an endorsement as chief engineer for seagoing service with an STCW endorsement as chief engineer officer.

The Coast Guard disagrees. Service using a rating endorsement will not be accepted to upgrade to an officer endorsement as chief engineer or second engineer officer.

One commenter recommends existing DDEs be allowed to advance to chief engineer with appropriate service.

As indicated in Figure 11.505, this SNPRM proposes to retain the current regulations with regard to advancement to Chief Engineer. The current path allows a progression with appropriate service and testing. The DDE can act as Chief Engineer within the limitations on the license/officer endorsement. However, the other 'chief engineer' endorsements are for Limited, MODU or unlimited categories. The Coast Guard welcomes comments on this new proposal; please be specific as to where cross-over points should be and what length of service is being recommended.

Two commenters recommend revising crossover points to qualify for officer endorsements for different tonnages, horsepower, and/or propulsion modes. The commenter believes that in order to provide crossover points more appropriate to the level of training and expertise engineers possess and the scope of their work, several paths should include 10,000 HP.

The proposed 10,000 HP credentials have been removed. This SNPRM retains the current engineer officer endorsement structure, as illustrated in Figure 11.505.

One commenter asks how a mariner can get an assessment for maintaining a boiler watch without being employed on a steamship.

It is possible to demonstrate steam competencies as part of an approved course or on a simulator. Not all persons are required to hold steam endorsements because a mariner may sail in any capacity by being limited to motor or gas turbine vessels only.

One commenter remarks that certain existing ratings are able to upgrade with assessment and training, but that the NPRM does not elaborate on what that training and assessment includes.

Required training and assessments are specified for each STCW endorsement in part 11, subpart C and part 12, subpart F of this SNPRM. This SNPRM also includes tables that indicate which domestic endorsements are eligible for certain STCW endorsements.

Four commenters recommend the Coast Guard raise the propulsion power threshold for first assistant engineers without an STCW endorsement because § 11.521 provides that first assistant engineers without an STCW endorsement may serve on seagoing vessels of less than 1,000 HP. One commenter recommends the Coast Guard raise this limit to at least 4,000 HP.

Once a vessel passes the boundary line, STCW regulations apply. These regulations require engineers on vessels of 750 kW/1,000 HP or more to hold STCW endorsements. Therefore, the Coast Guard cannot unilaterally raise this limit to 3,000 kW/4,000 HP. Regulation III/3 does allow for reduced requirements for chief engineers and second engineer officers on ships powered by main propulsion machinery of between 750 kW/1,000 HP and 3,000 kW/4,000 HP.

One commenter points out that Figure 11.505(a) has multiple inconsistencies with the text describing the route and service from chief engineer limited oceans and near-coastal to chief engineer, chief engineer 10,000 HP, and first assistant engineer 10,000 HP.

In this SNPRM, the Coast Guard retains the current regulations for domestic officer endorsements and has revised the figure accordingly.

One commenter asks the Coast Guard to remove management skills from the list of training topics required at the management level in § 11.511.

The Coast Guard cannot. Although the list has been removed from this SNPRM, the Coast Guard has retained the requirement to comply with the STCW standards of competence and is also proposing to retain the domestic scheme. In addition, the 2010 amendments to the STCW Convention include a new competence for ''leadership and managerial skills'' in Section A–III/2 of the STCW Code.

Deck Rating Endorsements

Three commenters point out that § 12.420 requires an RFPNW applicant to show 6 months of service, which can be reduced if the person has completed an approved course. The commenters note that courses are difficult to find and expensive to attend.

The Coast Guard recognizes that courses for RFPNW are difficult to find and are also costly; therefore we have revised the approach to implement the STCW Convention requirements. In the case of an RFPNW, the new approach would allow two paths: (1) a candidate may obtain six months of service (seagoing, Great Lakes and/or inland service) and meet the standard of competence through other methods, besides training (including in-service experience documented by the completion of assessments); or (2) a candidate may complete approved training that includes not less than 2 months of approved service.

Three commenters assert the NPRM is requiring all vessels to carry able seamen in proposed § 15.403(c).

The Coast Guard disagrees. The STCW Convention requires that anyone who is part of a navigational watch must hold an RFPNW endorsement. Section 15.403(c) explains that if a mariner has duties that include standing a navigational watch on a seagoing vessel, he or she must hold the proper endorsement (RFPNW).

One commenter finds that § 15.840 appears to require able seaman ratings on vessels that have never had this requirement imposed before. The commenter feels this requirement conflicts with U.S. manning and licensing standards.

The Coast Guard is not changing manning requirements. Any vessel not required to have able seamen will not be required to have them under this proposal.

One commenter requests that the Coast Guard allow for one RFPNW position to be filled by a specially trained ordinary seaman (OS) restricted to lookout duties. This will allow the OS to acquire sea service toward an RFPNW endorsement. The commenter recommends an OS have a minimum of 180 days of service to become a lookout and minimum of 365 days to become an AB/RFPNW.

All members of the navigational watch (including Specially Trained Ordinary Seamen), must be qualified as RFPNW. In addition, when a vessel's manning document allows for a Specially Trained Ordinary Seamen, it is in lieu of and not in addition to the normal complement of Able Seamen.

The Coast Guard agrees with the commenter's proposal that the OS may qualify for an RFPNW with 180 days of service. This is consistent with the STCW Convention requirements, and an applicant may obtain an able seaman-special endorsement provided within this SNPRM. One commenter recommends that the Coast Guard retain the progression path from entry level to specially trained OS/RFPNW (lookout duties only) to AB/RFPNW without restriction.

This SNPRM includes training requirements for RFPNW and for able seafarer-deck consistent with the STCW Convention provision. Seafarers serving on board vessels that proceed beyond the boundary line that serve as lookouts are required to meet the certification requirements for RFPNW. This SNPRM does not limit the attainment of the endorsement as RFPNW with no restriction to able seafarer-deck, but rather allows any mariner who demonstrates proficiency to obtain that endorsement. Seafarers serving as an able seaman on board vessels that proceed beyond the boundary line are required to meet the certification requirements for able seafarer-deck. It is the Coast Guard's view that these

requirements allow for the progression path from entry level to specially trained OS, and then to AB, provided the mariner meets the applicable requirements for the endorsement.

Eleven commenters note that, although able seaman-Sail is an existing rating, it is not mentioned in the CFR alongside other AB ratings, and they recommend that able seaman-sail be included in the regulations.

The Coast Guard agrees and has inserted able seaman-sail as well as able seaman-fishing industry in proposed § 12.401.

Engine Rating Endorsements

One commenter suggests that endorsements of GMDSS operator and Electronic Technician should be unlicensed endorsements.

The endorsement of GMDSS operator and GMDSS maintainer may be obtained by any officer or rating. The Electronic Technician endorsement proposed in the NPRM has been removed in favor of two new STCW endorsements: electro-technical officer and electro-technical rating.

One commenter points out that there is no mention of an ''engineman'' as a QMED endorsement.

This SNPRM proposes to eliminate ''Engineman,'' as a rating endorsement. The rating endorsement of ''junior engineer'' may be used to cover the qualifications if that position is continued on some vessels.

Ratings Forming Part of an Engineering Watch (RFPEW)

One commenter notes that many vessels less than 200 GRT/500 GT meet the requirements for the service and assessments for RFPEW, but lack a qualified assessor to sign off on the control sheets. The commenter suggests that a mariner who can meet the QMED Fireman/Oiler/Watertender (FOWT) sea service requirements should be deemed to have met the RFPEW requirements.

Sea service requirements for RFPEW (6 months) are the same for FOWT. The STCW requires an assessment of whether the mariner has achieved the specified standard of competence. If there is not a qualified engineer onboard, the only alternative is to attend training or go to another facility at which they can be assessed. The Coast Guard cannot mandate that a company put assessors on board a vessel.

One commenter states the requirement of a licensed engineer aboard vessels of 750 kW/1,000 HP propulsion power or more would put a burden on high performance small vessels. The commenter believes adding a third crew member or training the existing crew members would add an unnecessary burden.

This rulemaking does not change the manning requirements for this type of vessel. Unless an engineer is required by the manning certificate, there is no requirement for an individual holding an engineering endorsement.

Basic Safety Training (BST)

Two commenters want the Coast Guard to require that all engineers on inspected vessels on both domestic and international voyages receive basic safety training as well as adequate vocational training.

The BST requirements of the STCW Convention already apply to a portion of our domestic fleet by virtue that they trade in near-coastal voyages. Personnel working non-STCW vessels (including inland vessels) are required to be familiar with the vessel characteristics, including fire-fighting and lifesaving equipment as indicated in § 15.405. Officers and able seamen on inland vessels also must take firefighting and be qualified as lifeboatmen. We believe the existing requirements applicable to non-STCW vessels provide an equivalent level of safety to the requirements of the STCW Convention.

One commenter asks if crew members on all vessels, including uninspected passenger vessels, operating beyond the boundary line are required to complete BST training.

All applicants seeking an STCW officer endorsement must provide evidence, with their application, of meeting the standard of competence for basic safety training as described. However, operators of uninspected passenger vessels, as defined in 46 U.S.C. 2101(42)(B), are not subject to this requirement because of their special operating conditions as small vessels engaged in domestic, near-coastal voyages.

One commenter notes that small passenger vessels subject to Subchapter T or K of Title 46 of the CFR, vessels of less than 200 GRT/500 GT (other than passenger vessels subject to Subchapter H), and uninspected passenger vessels on domestic near-coastal voyages are exempt from the BST requirements in § 15.1101(a)(2). He also states that § 15.1105(c) requires all crewmembers on seagoing vessels to complete BST training. The commenter recommends that § 15.1105(c) be amended to exempt those vessels already exempted in § 15.1101(a)(2).

The Coast Guard agrees and has amended § 15.1105(c) by adding ''except as noted in § 15.1101(a)(2) of this subpart,'' after the word ''vessel''.

Lifeboatman Requirements

One commenter writes that mariners would experience difficulty in complying with the requirement in proposed § 12.630(c)(2) to participate in 12 rescue boat, liferaft, or other drills involving lifesaving apparatus, 4 of which include a rescue boat being placed in the water.

The Coast Guard has deleted the requirement to participate in drills from the SNPRM. The lifeboatman requirements are contained in § 12.409 in this SNPRM.

Fifteen commenters object to the use of the term ''survivalman'' for those mariners serving on vessels without installed lifeboats.

The Coast Guard has withdrawn its proposed use of the term survivalman and substitutes in its place, lifeboatman-limited for the domestic endorsement. Regarding the STCW endorsement, the Coast Guard is proposing to use the term proficiency in survival craft and rescue boats other than lifeboats and fast rescue boats—limited (PSC—limited), to ensure consistency with the Convention.

Two commenters request that the Coast Guard lower the minimum threshold for qualifying tonnage for lifeboatman to 15 GRT.

The Coast Guard notes that there is presently no minimum qualifying tonnage for this endorsement.

One commenter says §§ 12.610 and 12.630 permit completion of an approved program instead of the drills, and that there are no approved programs for these ratings. The commenter recommends changing ''program'' to ''course'' in both instances and allowing completion of a course in proficiency in Survival Craft to also be accepted.

The Coast Guard agrees and has amended the text in § 12.407 to use the term ''course'' instead of ''program''. One commenter says that the Coast Guard did not intend to make the survivalman requirement in § 15.404 apply to every person employed on a vessel and recommends that the Coast Guard remove the words ''Every person employed'' and add, in its place, the words ''Every person assigned duties''.

The Coast Guard agrees and has amended the text in § 15.404.

Flashing Light

Twenty-two commenters state mariners should not be required to pass a flashing light examination required in proposed § 11.401(i), since that method of communication is not used anymore.

The Coast Guard notes that exhibiting flashing light competence is still required for STCW deck officer endorsements on vessels in ocean

service of 200 GRT/500 GT or more. However, the Coast Guard proposes, in this SNPRM, to remove the flashing light examination requirement for all domestic licenses and for all raises in grade of unlimited tonnage licenses.

Seven commenters remark that the requirement in proposed § 11.401(i) that certain officers ''must pass a practical signaling examination,'' imposes a higher performance standard than required by the STCW Code, which says only that an officer must demonstrate competence by ''assessment of evidence from practical instruction.'' The commenters recommend that the evidence be in the form of questions on the navigation general module of the required examinations.

The Coast Guard disagrees with the proposed recommendation. The intent of the STCW Code is clear that candidates must demonstrate competency by practical instruction and/or simulation. In this SNPRM, we have changed the requirement to completion of an approved course. It should also be noted that the 2010 amendments to the STCW have lowered the required knowledge, understanding, and proficiency (KUP), and the Coast Guard will allow approved course offerers to modify their courses consistent with the amendments.

Radar Renewals

One commenter states that the requirement to take a radar observer recertification course every 5 years is no longer necessary for deck officers with recent shipboard experience on vessels over 1,600 GRT/3,000 GT as written in Table 11.480. If it is determined that the U.S. will continue to require a 5-year radar recertification, the commenter recommends that training include ARPA to be more in line with today's actual operating conditions.

The Coast Guard disagrees that recertification training for radar observer is no longer valid or necessary. The Coast Guard agrees with the suggestion that the training be revised to include collision avoidance functions but does not believe that it is appropriate to include this recommendation into regulation because not all vessels are equipped with ARPA. The suggestion will be considered when approving courses meeting the radar requirements.

Pilots

One commenter writes that pilot vessels, which sometimes operate beyond the boundary line in the pursuit of their vessel pilotage duties, should be exempted from the requirement in §§ 15.103(e) and 15.1101(a)(1) to carry the appropriate STCW endorsement.

These requests will be handled on a case-by-case basis by the Coast Guard, in accordance with 46 CFR 6.01.

Vessel Manning

One commenter says it is unreasonable to expect every crewmember to be familiar with all of the vessel familiarization items listed in § 15.405 and suggests adding language to clarify that every crewmember must become familiar with only the relevant characteristics of the vessel as they pertain to the crewmember's position.

The Coast Guard agrees and is proposing to retain the existing text that provides for the familiarization to be appropriate to the crewmember's position.

One commenter asks if the intention of § 15.404 is to increase manning requirements on the small passenger vessel industry.

The provisions in § 15.404 are not intended to increase manning, but to ensure personnel working on board vessels have the appropriate credential to work on board. Furthermore, they provide the relationship between domestic and STCW endorsements.

Two commenters state the proposed revision in § 15.515(b) could affect the number of crewmembers required to be carried aboard. The commenter believes that the Coast Guard needs to recognize that there are numerous reasons why a crew member may be off of the vessel when passengers are on board, and that the Coast Guard needs to clarify how the crew can complete their required tasks, as well as being able to step off the vessel for personal time without violating the COI.

The Coast Guard has amended § 15.515(b) to indicate that the master of the vessel may allow reduced crew for limited or special operating conditions, subject to the approval of the Officer in Charge, Marine Inspection in whose zone the vessel is operating or on the vessel's COI.

One commenter urges the Coast Guard to clarify that implementation of the STCW requirements is not meant to establish new manning requirements and to clarify that there is no requirement for vessels under 1,600 GRT/3,000 GT to carry a chief mate.

The Coast Guard agrees that implementation of the STCW requirements is not meant to establish new manning requirements. Therefore, we are maintaining the definition of ''chief mate'' as it appears in the existing regulations, rather than the definition proposed in the NPRM.

One commenter asserts that certain manning requirements in this revision will supersede the interpretation of NVIC 4–97, which states that foreign Port State Control officers may look for compliance with the STCW standards. The commenter notes that prior to this, it was left up to the Port State Control to enforce standards.

It is the United States' responsibility to ensure that its seafarers have met the international standards to which we are signatory. Whether a Port State Control officer checks a vessel for compliance is up to the individual Port State.

General Provisions

Three commenters ask the Coast Guard to retain the existing regulations in §§ 11.407 and 11.516 that specifically mention that graduation from a marine service academy, a maritime academy, or a 3-year apprentice training program be accepted as qualification for a domestic third mate or third assistant engineer endorsement.

The Coast Guard agrees. As this SNPRM separates the requirements for STCW and domestic officer endorsements, we have retained the current verbiage.

One commenter notes that in the event a mariner's TWIC becomes invalid, his or her credential also becomes invalid.

The Coast Guard disagrees. There are multiple reasons why a TWIC may become invalid and/or revoked, including but not limited to, illegal drug use, medical incapacitation, and felony convictions. A mariner's due process rights, however, preclude automatic invalidation of his or her MMC. By law, a formal hearing is required to proceed against a mariner's credential. In instances where the Coast Guard learns that a mariner's TWIC has been invalidated, proceedings will then commence against the mariner's MMC in due course. These proceedings will take place before an Administrative Law Judge pursuant to 33 CFR part 20. Because a valid TWIC is typically a condition of employment and must be produced to gain unescorted access to secure areas, invalidation of the TWIC will be enough to preclude a mariner from working onboard vessels. Appeals procedures can be found at 33 CFR 20.1001 through 20.1003 and 49 CFR part 825.

Applications

One commenter recommends that screening for disorders that are associated with excessive daytime sleepiness be included as a required element of the medical examination for

mariners, similar to the medical examination of pilots.

The Coast Guard provides guidance for the completion of medical examinations for mariners, which includes medical conditions that may cause daytime sleepiness. Additionally, the new medical examination form (CG–719K) provides a place where the medical examiner may note such diagnosis.

One commenter notes that proposed § 10.217 makes it appear as though the Coast Guard intends for applicants to submit their application packages directly to the NMC without first submitting it to the RECs.

The proposed § 10.217, which allows applicants to submit a package to any REC or any other location designated by the Coast Guard, will remain unchanged. The Coast Guard will establish a policy offering guidance about alternative locations where an applicant can submit his or her application package. The current policy is to send all applications to an REC.

One commenter asks if an STCW endorsement goes into continuity when a mariner replaces his or her domestic endorsement with a Document of Continuity.

Domestic endorsements go into continuity, while STCW endorsements do not. However, by virtue of the STCW endorsement's relationship with the domestic endorsement, the STCW endorsement will be re-instated with the domestic endorsement upon application, subject to all other renewal requirements. The Coast Guard proposes to amend § 10.227(g) to specify that only domestic credentials will be issued for continuity.

One commenter asserts that the minimum age for issuing a rating or STCW endorsement should be 15.

The Coast Guard disagrees. The Department of Labor has determined that the maritime industry is especially hazardous and that individuals under the age of 16 should not be allowed to work in this environment. However, the Coast Guard may recognize training and experience prior to age 16 in certain situations and within approved programs.

Two commenters ask the Coast Guard to explain the provision in § 11.205(b)(2).

The provision in § 11.205(b)(2) was moved to § 10.232. In this provision, the Coast Guard is pointing out that it does not intend to impose greater requirements or restrictions on naturalized citizens than it does on U.S.-born citizens. This is existing text.

One commenter says that § 11.205(f)(2) advises applicants to take an examination as soon as possible, which seems to be unnecessary and may not be advisable. The commenter suggests that applicants should be reminded that applications are only good for a year.

This specific provision in § 11.205(f)(2) was moved to § 11.201(j)(2). The Coast Guard agrees with the comment and has amended the text to clarify that the validity of the application period is 1 year.

Three commenters remark that proposed § 11.205(e)(3) is unclear and seems to require applicants for 200-ton credentials and towing vessel mate/master to complete a higher level of medical training.

The provisions for CPR training in § 11.205(e) were transferred to § 11.201(i). The proposed text in § 11.205(e)(3) of the NPRM was deleted from this SNPRM. The proposed requirements in § 11.201(i) state that all applicants for an original officer endorsement must take at least first-aid and CPR courses, except those specifically exempted in §§ 11.429, 11.456, and 11.467, which include some masters of not more than 100 GRT and OUPVs. All applicants for officer endorsements above 100 GRT on oceans routes must comply with this provision.

Course Approvals

Thirteen commenters disagree with the proposed requirement for training institutions to offer approved training courses every 12 months or lose approval for that course.

The Coast Guard agrees and has removed the proposal in this SNPRM.

Six commenters disagree with the proposed requirement that company owners, as well as students, fill out and submit questionnaires upon employees' completion of approved training.

The Coast Guard agrees and has removed the proposal in this SNPRM.

Five commenters disagree with the proposed requirement that a course approval expires when there is a change in the ''management'' of the training provider.

The Coast Guard agrees and proposes to retain the current requirement that a course approval expires when there is an ownership change in the training institution.

Thirteen commenters object to the proposed requirement that each training institution submit an annual report for each course. The commenters feel this requirement should be limited to educational and/or training institutions with individually approved courses only, and not to educational and/or training institutions with approved programs containing multiple courses which are already subject to the U.S. Coast Guard's approval process, independent and internal audits under a QSS.

The Coast Guard agrees. This proposed requirement was not intended to apply to individual courses within approved training programs, which typically have several approved courses embedded in them. In this case, one annual report would cover all of the embedded courses within a training program.

One commenter disagrees with proposed § 10.302(b)(5)(i), which requires that instructors at training institutions have either recent experience or training in effective instructional techniques (within the past 5 years).

The Coast Guard disagrees. If an instructor does not teach within 5 years, he or she risks losing proficiency. As such, § 10.302(b)(5)(i) will remain unchanged.

Three commenters disagree with proposed § 10.303(a)(4), which states that schools must ''require each student to successfully demonstrate practical skills appropriate to the course material and equal to the endorsement for which the course is required.'' The commenters feel that this is the responsibility of the Coast Guard.

The Coast Guard disagrees. The course approval will determine and state the authority and scope of the requirements, which will become the responsibility of the training institution. Some courses are required to include practical demonstration of skills as part of the approval.

One commenter writes § 10.303(a)(7)(i) seems out of place. There is a need for clarification on this topic to make it both fair and workable.

The Coast Guard deleted the text for § 10.303(a)(7)(i) from this SNPRM.

One commenter asks what is meant by ''Follow-up activities'' as written in § 10.302(b)(7)(ii)(E).

The Coast Guard has amended the text to clarify the statement to indicate that the lesson plans should include homework, reading assignments, and any other activity to be performed after the lesson has been presented. This requirement is now found in § 10.402(b)(7)(ii)(E).

One commenter asks why visual aids must be ''modern'' as written in § 10.303.

The Coast Guard notes that this requirement currently exists. Nonetheless, in this SNPRM the Coast Guard proposes to omit the word ''modern.''

Two commenters request clarification for the phrase ''deviating from course-

approved curricula'' as written in § 10.302(g)(2)(ii).

The Coast Guard believes the proposed rule is sufficiently clear and does not need revision. When a training institution submits a course approval package, part of that package is a course curriculum, which explains how the course will be presented (instructors, printed material, use of simulators, examinations, etc.). Once the course has been approved by the Coast Guard, training institutions may not deviate from, or make any changes to, the curriculum without submitting a request for a change to the course approval.

One commenter recommends the Coast Guard amend the approved curriculum reporting requirement (in § 10.303 of the NPRM) that training institutions provide an annual report to the NMC to include a summary for each of the provider's approved courses as it may likely add hardship to small entity operations.

The Coast Guard agrees and has removed the requirement for training institutions to provide an annual report to the NMC to include a summary for each of the provider's approved courses. The general standards requirements for schools with approved courses and programs are now found in § 10.403 in this SNPRM.

One commenter asks the Coast Guard to consider computer-based distance learning training for theory portions of courses and for courses not requiring an instructor.

The Coast Guard agrees and has added a new § 10.412 regarding distance and e-learning.

Six commenters note that the proposed regulation in § 10.303(a)(5) would require each school with an approved course to maintain physical or electronic records for at least 5 years after the end of each student's enrollment. The commenters request that this provision be kept at the current 1-year requirement.

The Coast Guard disagrees. Since all parties to the STCW Convention may, at any time, request documentary proof of a mariner's qualifications and training, documentary evidence of such training and qualifications must be retained for the life of the mariner's credential (5 years). Therefore, the Coast Guard is retaining this proposed requirement.

One commenter says § 10.303(a)(5) needs to be clarified and asks what part of the student record that must actually be maintained.

The Coast Guard disagrees and the proposed regulations in 46 CFR 10.403(a)(6) clearly state what is required to be maintained in a student record.

One commenter is concerned that the wording of the proposed § 11.401(j) could impact a mariner with current credentials who has been teaching Coast Guard-approved courses at a training institution when seeking renewal or upgrade to that credential.

The Coast Guard partially agrees. The SNPRM includes an existing provision in § 10.232(e) that allows the Coast Guard to accept evidence of employment in a position closely related to the operation, construction, or repair of vessels (either deck or engineer, as appropriate) as meeting the sea service requirements for renewal under § 10.227(e)(1)(iv). This service may be creditable for service for raise of grade of an engineer or deck officer endorsement; however, it may not be used for obtaining an original STCW management-level endorsement.

One commenter suggests that in § 10.227, the phrase ''position closely related to the operation * * *'' is being inconsistently applied to applicants for renewal who are instructors, examiners, port engineers, and port captains.

The Coast Guard disagrees. We have a long history of accepting such closely related service and have made all efforts to do so in a consistent fashion. If the commenter has specific examples of inconsistency, he or she may send those examples to the Office of Vessel Activities (CG–543) and the Coast Guard will take appropriate action.

Five commenters remark there is a need for greater specificity on the qualification requirements for instructors in Coast Guard-approved courses.

The Coast Guard agrees that this information is beneficial, but also feels this detail is better provided by a Navigation and Vessel Inspection Circular (NVIC) or similar guidance document, which we plan on issuing after publication of a Final Rule.

One commenter states instructors with expired credentials or military personnel with the appropriate experience should be allowed to act as instructors of approved training courses or programs.

Acceptance of instructors is conducted on a case-by-case basis and considers the whole of the prospective instructor's experience. Lack of a current merchant mariner credential will not necessarily disqualify a candidate.

Two commenters note that proposed § 12.630(d) offers the alternative for an applicant to complete an approved training program. Because of differing interpretations of this phrase, the commenters believe it would be better to use the words ''approved training'' as in § 11.407(a)(2).

The Coast Guard disagrees. An ''approved training program'' is more comprehensive and includes sea service training and assessment, while ''approved training'' may only include a single course and/or assessment.

One commenter raises concerns with the use of the terms ''Coast Guard accepted'' and ''Coast Guard approved'' in regards to training and recommends removing all reference to ''approved training.''

The Coast Guard is cognizant that the terms may cause confusion, but disagrees with eliminating ''approved training.'' In this SNPRM, we have clarified the definitions. In general, ''Coast Guard approved'' refers to training that is approved by the Coast Guard through the process outlined in regulation. ''Coast Guard accepted'' refers to training that is approved by and/or provided by other entities and do not go through the Coast Guard approval process. Currently, the only Coast Guard-accepted training is first aid, CPR, fishing vessel safety instructor, and VSO.

Examinations

Two commenters express concern over the Coast Guard substituting a Coast Guard-prepared examination for one used in an approved course, unless the course is approved to substitute for a Coast Guard examination for a merchant mariner credential.

The Coast Guard agrees. It was our intent to limit this provision to courses approved to substitute for a Coast Guard exam, and we have revised the wording of this requirement to make this more apparent.

Three commenters suggest that the standard for approval of a course to substitute for the Coast Guard-administered examination for an officer or rating endorsement be changed to require only that the course's exam be equivalent to that given by the Coast Guard.

The Coast Guard disagrees and does not propose to amend this requirement from its present form.

One commenter suggests removing the word ''written'' from § 10.303(a)(3). The commenter says some training institutions are providing online examinations, which are not written examinations and that there may be a situation where the evaluation is based on a simulator examination.

The Coast Guard agrees with the intent of the comment to provide flexibility for the various means for examination (written or electronic) and has amended the text to reflect this

change. The requirement was moved to § 10.403(a)(4).

One commenter states § 11.430(d), which requires international rule outside the COLREGS line but within the boundary, will be an administrative nightmare and asks how the NMC reviewer would know if the international rules exam was taken by someone who took an inland/Great Lakes course.

The Coast Guard notes that this requirement has existed for many years and is found in the current § 11.430. If the course approval states that it covers Great Lakes and inland waters and that it includes both inland and international rules of the road examination questions, no COLREGS limitation is placed on the credential. If an applicant tests at an REC, the Coast Guard assigns the module that covers both inland and international waters. If the mariner states he or she wants only an inland rules examination, the Coast Guard gives the applicant an inland rules module, and a COLREGS limitation is placed on the MMC.

Quality Standard System (QSS)

Seven commenters express confusion and disagreement with their interpretation that the Coast Guard is removing itself as one of the QSS monitors for Coast Guard-approved courses and training programs. The commenters believe that this will require training institutions to spend large amounts of money for an independent organization to help them develop and monitor a QSS for their organizations.

It was not the intent of the Coast Guard to remove itself from the monitoring of courses. The Coast Guard has amended the text in 46 CFR part 10, subpart D by providing two options. The first option is a Coast Guard-approved course for which the Coast Guard also provides the QSS monitoring. The second option is using a Coast Guard-accepted QSS organization that approves and monitors a course. Under the second option, the Coast Guard monitors the Coast Guard-accepted QSS organization. The Coast Guard will continue to perform oversight of all approved courses and training programs.

Five commenters recommend that the proposed regulations in §§ 10.308 and 10.303 permit the maritime academies to demonstrate compliance with the QSS provisions in Regulation 1/8 of the STCW Convention and those items specifically listed in § 10.303(b)(1)(i)(x) through existing recognized academic accreditation, where accredited degree programs and license/STCW courses which make up an approved program are linked.

The Coast Guard partially agrees with the comment. The STCW Convention requires that the training is monitored by a QSS, however the Convention also allows for the acceptance of a QSS as part of an accreditation body provided it covers the Convention training requirements. The Coast Guard recognizes that academic accreditation bodies address some (not all) of the STCW Convention requirements and have amended the text to allow acceptance of the accreditation documentation for one or more of the QSS required items.

One commenter suggests that the federal and state maritime academies be subject to the same QSS requirements and instructor qualification standards as other schools offering Coast Guard-approved courses.

The Coast Guard agrees in part. The proposed QSS requirements will apply to all organizations with Coast Guard-approved courses or programs, including the maritime academies. However, the Coast Guard notes that specific application of these requirements will vary as the maritime academies are also regulated by the Maritime Administration in 46 CFR part 310.

One commenter requests that the Coast Guard remove the requirement in proposed § 10.303(a)(8) for an annual internal audit of each individual approved course as this requirement is overly burdensome. If this requirement cannot be removed, the commenter believes that training facilities that maintain full ISO 9001 certification by a USCG recognized QSS organization should be exempt from this requirement.

The Coast Guard partially agrees. Section 10.303(a)(8) of the NPRM proposed that a training institution conduct an internal audit midway through the term of the course's approval and submitted to the NMC. Course approvals are typically good for 5 years, so the midway point is at two-and-a-half years. The Coast Guard is using accepted quality practices that require companies to implement internal auditing functions.

If, as part of its ISO certification, a training institution is required to conduct an annual internal audit, that same documentation can be utilized for the required QSS audit. Also, the school is only required to conduct a single internal audit of the QSS regardless of how many individually approved courses the institution offers.

Seven commenters request that the Coast Guard delete the requirement in proposed § 10.303(a)(10) for a QSS.

A QSS is required by the STCW and will remain a requirement for training courses required to obtain an STCW endorsement. Schools that do not offer STCW courses will not be required to have a QSS.

One commenter notes that § 10.303(b)(1)(vii) states that the QSS must define the provider's responsibility for ''enabling mariner completion of Coast Guard applications * * *.'' The commenter further states that a school's primary purpose is to provide training, rather than to deal with application paperwork. Although training institutions may provide assistance with application preparation, that service is an ancillary feature and, as such, is not an appropriate component to be addressed by a rulemaking. The commenter recommends that this requirement be deleted from the proposed regulations.

The Coast Guard agrees and has deleted that language from § 10.403.

One commenter recommends that the Coast Guard delete § 10.303(b)(1)(vii), which requires that course providers assist students in the preparation of their Coast Guard MMC applications.

The Coast Guard agrees and has deleted that language from § 10.303(b).

Training Record Book (TRB)

Three commenters state the additional Training Record Book (TRB) entries proposed in § 10.304 exceed the current requirements given the one-time use of the TRB for original license application only. The commenters believe requiring dual signatures in the TRB does nothing to enhance safety and is an enormous documentation burden with no added value.

The Coast Guard partially agrees. We agree that the TRBs are made to be used for onboard training and assessment as part of a training program. Therefore, the requirements have been amended to reflect that. The Coast Guard disagrees that the signatures do not add any value. We believe that the signatures are necessary to establish when and to whom the prospective officer has demonstrated that he or she has achieved the standard of competence. This requirement is consistent with Section B–II/1, paragraph 9 of the STCW Convention.

Designated Examiner (DE)/Qualified Assessor (QA)

Six commenters disagree with the proposed definition of designated examiner. The commenters believe that the DE is not qualified to evaluate

whether an applicant has achieved the level of competence required to hold an endorsement on an MMC.

The Coast Guard agrees and has revised its definition for designated examiner to make it specific to towing vessels and removed references for determining competence. We have further added a definition for qualified assessor for those individuals conducting STCW assessments and the assessor's skills and/or training would be focused on conducting assessments instead of training.

Three commenters express concern over the requirement that a designated examiner must have experience and/or training in assessment techniques and feel that this would impose an additional burden on mariners who conduct STCW assessments that will negatively impact mariners' willingness to serve assessors.

The commenters appear to have confused a qualified assessor, who witnesses a demonstration of skill for STCW purposes, with a designated examiner, who assesses the competence of candidates for towing vessel licenses and who is required to be approved by the Coast Guard. The requirement for experience and/or training in assessment techniques was not changed in the NPRM or this SNPRM. The proposed amendments to this definition were limited to the use of the term strictly with regard to the towing vessel TOAR.

One commenter notes a disparity between § 10.305(a)(3), which allows a DE to assess anyone seeking an endorsement lesser than or equal to the endorsement the DE possesses, and Policy Letter 14–02, which requires a RFPNW be assessed by an unlimited second mate or master. The commenter recommends that the standard stated in the NPRM be followed immediately, and into the future.

The Coast Guard disagrees. The provisions for DE training in § 10.305 were transferred to § 10.405. As previously noted, a ''designated examiner'' differs from a ''qualified assessor,'' and the proposed § 10.405(a)(3) describes the qualifications of a designated examiner, it does not specify what assessments they can conduct.

Four commenters express concern that the proposed rule would impose an additional burden on mariners who conduct STCW assessments that will negatively impact their willingness to serve as assessors.

A qualified assessor witnesses a demonstration of skill for STCW, while a designated examiner assesses the competence of candidates for towing vessel licenses that is required to be approved by the Coast Guard. Also, as used in the proposed rule at § 10.405(a), ''must have * * *'' refers to the requirements to qualify for Coast Guard approval as a designated examiner; it does not impose a burden for the designated examiner or qualified assessor to carry documentation of the experience.

Subjects for Deck and Engine Officer Endorsements

One commenter recommends that the format of proposed Table 11.901–2 (Deck), Tables 11.950–1 and 2 (Engineer) and Table 12.516(B) (Ratings) be harmonized and amended to more clearly identify the degree of expertise required at different levels.

The Coast Guard agrees and has harmonized the tables.

Towing

Two commenters question the training schedule to receive an STCW endorsement, saying it is overly burdensome to the marine assistance operators. The commenters suggest that if the industry cannot be exempt, a shortened program designed for their needs is necessary to alleviate this burden.

Assistance towing vessels operating within the jurisdictional waters of the United States will not be required to undergo additional training and assessment beyond what is already required for a domestic endorsement. Those vessels operating beyond the boundary line must meet the STCW requirements.

Three commenters point out that proposed § 10.304(f)(5) states that a TOAR must have a space for an instructor or officer to document that the applicant has received the training needed to perform the task or skills. The commenters believe the TOARs posted by the Coast Guard as part of NVIC 4–01 on towing endorsements do not have space for documenting this training, even though that requirement appears in the current rules. The commenters recommend that the requirement for documentation of training be dropped from this section.

The Coast Guard is taking necessary steps to revise the NVIC to include a space for the designated examiner's signature. However, the Coast Guard still believes there is value in documenting that an individual has determined that an applicant has achieved the level of proficiency required to hold a towing vessel endorsement.

Tankerman

One commenter remarks that the proposed requirement to not allow sea service granted for attendance at a Coast Guard-approved course to meet requirements for sea service recency for renewal of a tankerman endorsement conflicts with renewal requirements in § 13.120.

The Coast Guard disagrees. The regulations concerning renewal of a tankerman endorsement specifically allow completion of a Coast Guard-approved course as an alternative to recent sea service on tank vessels for renewal of a tankerman endorsement.

Three commenters ask that the proposed rule be revised to retain the ability for a mariner holding an endorsement as tankerman-PIC (barge) to qualify for an STCW endorsement.

The Coast Guard agrees and has revised the proposed rule to allow mariners who hold a tankerman-PIC (barge) endorsement to qualify for a corresponding STCW endorsement. The STCW endorsement will be restricted to ''non-self propelled vessels.''

Offshore Supply Vessels (OSVs)

One commenter notes there needs to be a clearly defined pathway out of the OSV licensing structure to the non-trade restricted licenses.

The Coast Guard agrees and will issue guidance to describe the difference in required competence between OSV credentials and non-trade restricted credentials.

Six commenters note that the NPRM proposes that applicants for OSV officer endorsements on seagoing vessels must complete a Coast Guard approved program of training, assessment, and sea service that meets the requirements of the STCW regulations. The commenters recommend that the final OSV credential rules retain the more flexible language to insure the continuity of an alternate qualifying method for vessels of limited tonnage on domestic voyages.

The Coast Guard has revised the proposed requirements to allow for the use of the various methods for meeting the STCW standard of competence for both STCW and domestic endorsements.

One commenter states application of the STCW to mariners serving on vessels of less than 200 GRT/500 GT in the OSV industry should be held to the same standard as the deep sea industry.

The Coast Guard agrees, and these regulations ensure that mariners in all near-coastal and ocean industries, including the OSV industry, will comply with the STCW Convention.

MODUs

One commenter points out that the Bureau of Ocean Energy Management Regulation and Enforcement no longer approves courses, specifically the blowout prevention and well control training program, and recommends that the rulemaking be revised to reflect this change in the regulations.

The Coast Guard agrees and has made the change.

Two commenters feel that the Coast Guard is issuing credentials for mariners on MODUs, such as chief engineer MODU, assistant engineer MODU, and able-bodied seaman MODU, but that the Coast Guard fails to include them in the appropriate portions of the CFR, instead listing them in an obscure volume of the Marine Safety Manual, which is a guidance publication.

Some of the requirements for MODU endorsements are already contained in the regulations in the previous § 10.540 series for engineer officers and in the previous § 10.470 series for deck officers. They now appear in §§ 11.540–11.544 for engineer officers and in §§ 11.468–11.474 for deck officers. The Coast Guard has proposed in the regulations those endorsements which we have statutory authority to issue.

Small Passenger Vessels

One commenter asks the Coast Guard to exempt small passenger vessels subject to subchapter T or K of Title 46, CFR from having to comply with subpart J.

The Coast Guard partially agrees. The STCW Convention requires that small passenger vessels on seagoing voyages comply with the STCW Convention and Code. The Coast Guard maintains that individuals serving on such vessels on domestic voyages are in substantive compliance with STCW and will not have further obligations under this rule. However, those same individuals, when operating in the waters of another nation, must meet the STCW Convention requirements.

Economic Comments—Training Requirements

Nine commenters express concern about costs for STCW training requirements that are absorbed not by mariners, but their employers and state that companies will have a direct and significant impact from the proposed requirements because, to a large extent, companies pay for the training their employees will obtain under collective bargaining agreements where contributions are made to a pooled training fund.

The NPRM does not directly require companies or maritime employers to pay for the proposed training requirements for affected mariners. However, the Coast Guard acknowledges that some companies employing mariners might be indirectly impacted in the future. The Coast Guard understands there are companies that have made the business decision to help pay for mariner training. In recognition of this possibility, Coast Guard has modified the analysis of impacts on small entities in the Initial Regulatory Flexibility Analysis to include a sensitivity analysis showing the impact of additional training costs on small entities. In addition, under the SNPRM, the Coast Guard would accept various methods for demonstrating competence that would reduce the costs of training requirements proposed in the November 17, 2009 NPRM, a significant cost relief to companies or maritime employers. Please see the discussion under ''Methods for demonstrating competence'' for additional details.

Twelve commenters suggest that proposed training requirements may create or exacerbate shortages of qualified mariners due to excessively high personal and financial costs imposed on mariners, and present challenges to owners and operators in manning vessels due to higher compensation requirements for a shrinking pool of qualified mariners.

The Coast Guard is cognizant that additional training requirements can have an impact on the mariner pool available to man the vessels. The Coast Guard does not believe that the proposed training requirements in this SNPRM will create or exacerbate shortages of qualified mariners. In response to public comments received after the publication of the November 17, 2009 NPRM, the SNPRM would permit the Coast Guard to accept various methods for demonstrating competence, such as on the job training. These methods would significantly reduce the costs of training requirements proposed in the NPRM. Furthermore, the Coast Guard would allow for the preservation of the ''hawsepipe'' program and foster career paths that were not previously available. The Coast Guard would also grant sea service towards STCW endorsements and for domestic endorsements of unlimited tonnage when those mariners provide proof of service on the Great Lakes or inland waters. Finally, the Coast Guard proposes to remove the requirement proposed in the November 17, 2009 NPRM for an OICEW or DDE candidate to complete approved education and training of at least 30 months.

Economic Comments—QSS Requirements

Four commenters state that the NPRM requires training schools to use a non-governmental entity QSS organization or employ professional outside consultants. They add that the costs of using a third-party organization or consultants should be included in the regulatory analysis. Further, one commenter says that the magnitude of these costs may break the budgets of many mariners and their employers.

The Coast Guard included a range of costs to develop a QSS program for an entire organization (not for individual courses) of $4,320 to $12,240. This range is sufficiently broad to include the possibility that a training provider hires a professional outside consultant, uses a non-governmental entity QSS organization, or develops its own QSS using its internal human resources at lower costs.

Economic Comments—Small Entities

Six commenters express concern about the cost impact of proposed STCW training requirements on small entities that would not be able to pay for their mariners' training or compensate them with higher wages they may request after obtaining additional training.

The Coast Guard concurs that small entities may be impacted by the training requirements and has revised the Regulatory Flexibility Analysis to assess the impact of training costs on small entities. However, as mentioned in the previous responses, the alternative methods for demonstrating competence proposed by the Coast Guard in this SNPRM would significantly reduce the cost impact of the training requirements.

Response to Comments From MERPAC

Below, the Coast Guard responds to comments received from the MERPAC. Several of MERPAC's comments noted non-substantive, editorial errors in the NPRM. The Coast Guard has incorporated these comments where appropriate, without further discussion.

MERPAC recommends that this rulemaking be merged to include the results of the comprehensive review adopting the 2010 amendments to the STCW Convention and STCW Code, which was concluded by the International Maritime Organization (IMO) in June 2010.

The Coast Guard agrees and has decided to publish this SNPRM, which describes proposed changes from the NPRM published on November 17, 2009, and includes the new proposed regulations which address the IMO 2010

amendments to the STCW Convention and Code.

MERPAC believes sea service should be accepted based on the applicability to the credential being sought rather than for a geographical area. For example, service on a large vessel on the Great Lakes should be deemed equivalent to service on a large vessel on the open ocean.

The Coast Guard agrees and proposes to grant sea service for STCW endorsements as follows: Great Lakes: day-for-day; and inland waters: 2 days of inland service equals 1 day of ocean service. The reason for the difference in service credit is based on the fact that Great Lakes service most closely resembles the length, breadth, equipment, and operation of ocean service.

MERPAC recommends that the medical certificate described in the 2010 amendments should only apply to those required to hold an STCW endorsement, which are valid for 2 years.

The Coast Guard agrees and has included the medical certificate in § 10.301. It will be valid for a 2-year period for those mariners to which STCW applies and for a 5-year period for all other mariners. The sole exception to this is pilots, and their medical certificates will be valid for a 1-year period per the existing requirement. Mariners will need a valid medical certificate to apply for a credential.

MERPAC recommends that all methods for demonstrating competence listed in column three of the tables in Part A of the STCW Code should be accepted, not just training.

The Coast Guard agrees and proposes to amend the requirements in parts 11, 12, and 13 to accept different methods for demonstrating competence in accordance with the STCW competency tables, as appropriate for each competence. This will allow the preservation of the ''hawsepipe'' path and retain existing career paths.

MERPAC believes the Coast Guard needs to ensure that those implementing these regulations be involved in the process to make sure the new regulations can be implemented.

The Coast Guard agrees; representatives from the National Maritime Center and the Office of Vessel Activities, both of which will carry responsibility for implementing these proposed regulations, have been closely involved in the development of the implementation process for this rulemaking.

MERPAC recommends that the amended STCW Code be used as the base language for the new regulations and amended as needed to fit U.S. needs.

The Coast Guard partially agrees. The Coast Guard has used STCW language for STCW endorsement requirements but has retained the current language for domestic requirements.

MERPAC recommends that the following changes be made to the definitions section of this rulemaking:

In the definition of ''assistance towing'', MERPAC feels the addition of ''for hire'' is not clarifying as intended and should be deleted.

The Coast Guard agrees, and the definition has been revised.

Regarding the definition of ''chief mate'', MERPAC expresses concern regarding the two-watch system. MERPAC feels that the language is too specific to large vessels with multiple mates and that many smaller vessels do not actually carry a chief mate, which causes myriad of problems, including truncated career paths. MERPAC recommends removing the new language.

The Coast Guard agrees, and is retaining the existing definition.

MERPAC suggests that the Coast Guard add ''competent'' to the list of definitions.

The Coast Guard disagrees and believes that the definition of ''competent'' alone would be redundant, given that we define ''competent person''.

Regarding the definition of ''competent person'', MERPAC believes all definitions should be spelled out in the CFR part in which the term is used, not referenced to another section.

The Coast Guard agrees and has removed this definition and included the relevant information in part 13.

Regarding the definition of ''day'', MERPAC suggests that the policy of issuing 1½-day credit for a 12-hour work day should be extended to all mariners.

The Coast Guard disagrees and sees no reason to revise the definition published in the NPRM, as it already allows for this credit, if appropriate.

MERPAC feels the definition of ''designated examiner'' should state ''observed demonstration of proficiency and other assessments required for MMC's'', and that the Coast Guard should strike the words ''training or'' and retain the words ''of assessment''.

The term ''designated examiner'' (DE) has been revised and now refers only to the person assessing proficiency aboard towing vessels in a TOAR. The Coast Guard has developed a new term and definition, ''qualified assessor'' (QA), for assessment of practical demonstration of proficiency on other vessels. The Coast Guard disagrees with the removal of the words ''training or'' because DEs and QAs often first act as teachers before acting as assessors of a candidate's practical demonstrations.

MERPAC feels that the definition of ''domestic voyage'' does not allow for voyages from one United States port to another that enter Canadian/Mexican waters. MERPAC believes Great Lakes voyages need to be included here as well.

The Coast Guard disagrees with the comment. The definition of ''domestic voyage'' is consistent with the application of the STCW near-coastal provisions, which requires that vessels operating in another country's waters meet the STCW requirements. Furthermore, the STCW Convention does not apply to vessels operating in the Great Lakes; therefore, mariners operating in these waters can use the U.S. domestic credential specifically created for this area. It is unnecessary to include Great Lakes voyages in the definition, as this is already a route established on credentials.

MERPAC believes the definitions of ''dual mode/ATB'' and ''dual mode/ITB'' do not add clarification about which type of vessel is intended, and suggests that the Coast Guard use industry verbiage.

The Coast Guard agrees, but did not revise the definitions. The Coast Guard is seeking comments on this issue, to include specific suggestions of the proper definitions to be included in the definition.

In the definition of ''first assistant engineer'', MERPAC suggests deleting second engineer officer. MERPAC feels that the effort to harmonize domestic and international terminology and standards is only causing more confusion.

The Coast Guard agrees and has made only minor changes to the definition currently in the regulations. The proposed definition for ''first assistant engineer'' is as follows: ''*First assistant engineer''* means the engineer officer next in rank to the chief engineer and upon whom the responsibility for the mechanical propulsion and the operation of maintenance of the mechanical and electrical installations of the vessel will fall in the event of the incapacity of the chief engineer.'' This would change ''next in seniority,'' as used in the existing definition, to ''next in rank.'' It would also add responsibility for ''the operation of maintenance of the mechanical and electrical installations of the vessel.''

MERPAC believes the definitions of ''horsepower'' and ''propulsion power'' should state that the manufacturer's

rating of the engine refers to the continuous-rated output.

The Coast Guard agrees and has revised the definition.

MERPAC feels that the Coast Guard has not specified when a credential is ''valid'' or ''invalid''.

The Coast Guard term ''invalid credential'' is clearly defined in existing text within § 10.107.

MERPAC believes that the term ''lifeboatman'' should be deleted and that the term ''survival craft operator'' would be more appropriate. MERPAC believes two levels of ''survival craft operator'' should be created for all survival craft or limited to those vessels without lifeboats.

The term lifeboatman must be retained because it is mandated in the law at 46 U.S.C. 7316. The Coast Guard is proposing the following domestic endorsements: Lifeboatman; and lifeboatman-limited. The Coast Guard is also proposing two STCW endorsements: Proficiency in survival craft and rescue boats other than fast rescue boats (PSC); and Proficiency in survival craft and rescue boats other than lifeboats and fast rescue boats—limited (PSC—limited).

MERPAC feels that since the term ''lower level'' is only used to assess fees, the Coast Guard should either delete this term or find a more appropriate, less demeaning term.

The terms ''upper level'' and ''lower level'' were used in § 10.219. The Coast Guard has replaced the term ''upper level'' with the term ''unlimited'' (which means credentials authorizing service on vessels of any gross tons/unlimited tonnage or unlimited propulsion power). The Coast Guard has also replaced the term ''lower level'' with the term ''limited'' (which means credentials authorizing service on vessels of less than 1,600 GRT/3,000 GT).

MERPAC believes the term ''management level'' means ''a level of responsibility within STCW'' and should state as much.

The Coast Guard agrees and has revised the definition consistent with this recommendation.

Regarding the term ''near-coastal'', MERPAC suggests the Coast Guard add the words ''and its possessions'' after the words ''waters off the United States.''

The Coast Guard agrees and has revised the definition.

MERPAC believes the definition of ''operational level'' should say ''vessel'' not ''ship'' to be inclusive of all vessels affected by STCW. MERPAC feels the Coast Guard should be consistent throughout the document, removing other references to ''ship''.

The Coast Guard agrees and has removed references to the term ''ship''.

Regarding the definition for ''orally assisted examination'', MERPAC believes that only Coast Guard personnel at an REC, approved and trained to administer these tests, should provide an oral exam. MERPAC does not believe the language ''by Coast Guard examiner'' captures the intent and that it needs to assure that this cannot be interpreted to include ''Coast Guard-approved examiner''.

The Coast Guard agrees that special training is needed to properly administer an oral examination, but does not think it necessary to make the suggested revision, as the phrase, ''Coast Guard,'' is not the same as saying ''Coast Guard-approved''.

In the definition for ''qualified rating'', MERPAC feels that ''lifeboatman'' should be noted as an endorsement and should be removed from the definition.

The Coast Guard agrees and has revised the definition.

MERPAC feels that the second sentence in the definition of ''QSS'' should be removed.

The Coast Guard modified the definition as follows: ''QSS means a set of policies, procedures, processes and data required to establish and fulfill the organization's objectives.''

MERPAC suggests revising the definition of ''rest'' by removing the language regarding administrative tasks.

The Coast Guard disagrees. The language regarding administrative tasks clarifies the definition. This is an existing definition that was transferred from part 15.

MERPAC suggests harmonizing the definition of ''seagoing service'' with the definition in the STCW Convention.

The Coast Guard agrees and has adopted the STCW definition of seagoing service.

MERPAC believes the Coast Guard should add the words ''on file at the Coast Guard'' into the definition of ''senior company official''.

The Coast Guard disagrees and has removed this language as signatures are no longer kept on file at the Coast Guard.

MERPAC suggests breaking the tables of exam topics into STCW versus applicable to all, or somehow designate with an asterisk to eliminate confusion. MERPAC also suggests that the Coast Guard review the contents for true harmonization with the STCW concepts of operational and management levels.

The Coast Guard agrees in part and has conducted a review of examination topics to ensure they are up to date and reflect both domestic and STCW requirements at both operational and management levels.

MERPAC recommends that the Coast Guard delete the word ''ratings'' in § 10.109(b) that are endorsements. For example, a lifeboatman is not a person and is not a rating; it is an endorsement applied to a credential held by a person.

The term ''rating'' in § 10.109 is used to identify a type of endorsement. Every position listed in § 10.109(b) can be independently held; therefore they are endorsements.

MERPAC recommends that the Coast Guard separate the domestic endorsements from the STCW endorsements.

The Coast Guard agrees and has clearly separated the two endorsement schemes to ease the reading of the requirements.

MERPAC recommends that the Coast Guard amend § 10.219(d)(3) to say that cash is no longer accepted, but checks, certified checks, and money orders are accepted.

The Coast Guard agrees that cash payments should not be accepted, but disagrees that checks, certified checks, and money orders should be acceptable methods of payment. Eliminating payment by those means reduces costs and administrative burden, including audit requirements and the necessity for specially trained personnel to handle these types of transactions. Additionally, movement to all-electronic records and payment systems is expected to produce significant efficiency improvements and cost reductions.

MERPAC recommends that in § 10.225(b)(2), the Coast Guard should delete the requirement that applicants provide proof that they have applied for a TWIC within the past 30 days. Proof of holding/applying for a TWIC should be sufficient. MERPAC believes it is not the mariner's fault if the TSA takes longer than 30 days to provide mariners with the document.

The Coast Guard disagrees. The language to hold a valid TWIC is necessary for mariners who may apply for a change in their existing credential. These mariners are already TWIC holders.

MERPAC recommends that, in § 10.225(b)(7), the Coast Guard retain the previous language of ''Coast Guard-approved form'' when an applicant submits an MMC application. MERPAC believes this will allow mariners to submit other forms as appropriate.

The Coast Guard disagrees, and believes that the specific Coast Guard form, which is the only form accepted

by the Coast Guard, should be specified in lieu of the more general verbiage of the current regulation.

MERPAC recommends that, in § 10.227(e)(1)(iv), the Coast Guard add elaborating language to the phrase ''position closely related to the operation * * *'' for applicants to provide proof of meeting professional requirements for MMC renewals, as the current language is insufficient. MERPAC expresses concern that instructors/examiners as well as port captains/port engineers may not be approved as providing ''closely related service''.

The Coast Guard disagrees and feels that the language is adequate as proposed. Individual circumstances will be evaluated on a case-by-case basis.

MERPAC recommends that the Coast Guard clarify § 10.227(g) with regard to Documents of Continuity. Specifically, MERPAC wants to know which document/endorsement goes into continuity. MERPAC believes that the license is in continuity but the STCW certificate/endorsement goes away completely and that domestic endorsements go into continuity, while STCW endorsements do not. However, MERPAC points out, by virtue of the STCW endorsement's relationship with the domestic endorsement, the STCW endorsement will be re-instituted with the domestic endorsement upon application, subject to all other renewal requirements.

The Coast Guard proposes to amend § 10.227(g) to specify that only domestic credentials will be issued for continuity. A new § 10.227(g)(3) will discuss STCW endorsements tied to domestic credentials, which go into continuity. Domestic endorsements go into continuity, while STCW endorsements do not. However, by virtue of the STCW endorsement's relationship with the domestic endorsement, the STCW endorsement will be re-instated with the domestic endorsement upon application, subject to all other renewal requirements.

MERPAC recommends that § 10.235(d) should read, in part, as follows: ''* * * will be issued a replacement MMC reflecting the remaining endorsements''.

The Coast Guard disagrees. We have not proposed any changes to this paragraph from the existing text, and we believe that the current language is sufficiently clear.

MERPAC recommends that, in § 10.302(d)(2), the Coast Guard remove the requirement that a course must be offered every 12 months or its approval will expire.

The Coast Guard agrees and has removed this requirement in this SNPRM.

MERPAC believes that clarification is needed in § 10.302(d)(5) and that the Coast Guard should create a new section to address change in management and name change of school, notifying NMC of changes.

The Coast Guard agrees in part, and we propose in this SNPRM to retain the current regulation that a course approval expires when there is an ownership change in the training institution.

MERPAC recommends that, the Coast Guard delete the words ''and employers'' from the requirement in § 10.302(b)(7)(iii) to complete surveys after completion of approved courses.

The Coast Guard agrees and has removed the proposed requirement that mariners' employers be required to complete course evaluation surveys.

MERPAC recommends that the Coast Guard amend § 10.303(a)(3) to read as follows: ''Give written examinations to each student appropriate for the course material and should be equivalent in scope and difficulty of an examination prepared by the Coast Guard based upon the knowledge requirements of the position or endorsement for which the student is being trained.''

The Coast Guard agrees in part and has amended the proposed requirement to clarify that the reference to an examination prepared by the Coast Guard is only for courses that are approved to substitute for a Coast Guard examination for an officer or rating endorsement.

MERPAC recommends that the Coast Guard delete the words ''including the substitution of an applicable Coast Guard exam'' from § 10.303(a)(9)(iv).

The Coast Guard agrees in part. It was our intent to limit this provision to courses approved to substitute for a Coast Guard exam, and we have revised the wording of this requirement to make this more apparent.

MERPAC recommends that the Coast Guard delete § 10.303(b)(1)(vii), which requires that course providers assist students in the preparation of their Coast Guard MMC applications.

The Coast Guard agrees and has deleted that language from § 10.303(b).

MERPAC recommends that the Coast Guard amend § 10.304(b) as it conflicts with current practice and needs to be corrected. MERPAC believes there are exceptions to the statement that recency requirements may not be achieved by service granted as a result of successful completion of approved training or by training on a simulator. For example, applicants for renewal of their tankerman-PIC endorsements can take a course in lieu of service to satisfy recency requirements.

The Coast Guard agrees that there are some exceptions to the requirement and has amended this section accordingly.

MERPAC recommends that the Coast Guard delete § 10.304(c) which states, ''Unless otherwise allowed, training obtained before receiving an endorsement may not be used for subsequent raises of grade, increases in scope, or renewals.''

The Coast Guard disagrees and has retained the proposed language. There are some exceptions to the statement, including establishing continued professional competence by means of training.

MERPAC feels that the requirements put forth in § 10.304(d)(2) and (3) are redundant with the STCW Code and should be deleted. MERPAC believes the Coast Guard should insert language that says the training record book will cover the knowledge, training, and proficiency in accordance with Part A of the STCW Code.

The Coast Guard disagrees. The training record book should be used to document training and assessment which will be performed on board a vessel. It is expected that not all training and assessment will be conducted onboard, therefore there is a need to differentiate between what is conducted on board and what is conducted ashore.

MERPAC recommends that the Coast Guard revise § 10.304, and suggests an entire rewrite of the proposed section.

In this SNPRM, the Coast Guard has utilized some of MERPAC's recommendations in revising § 10.404 of the NPRM.

MERPAC feels that the language in § 11.213 is too restrictive and does not give credit that is needed to allow military officers to utilize quality training and sea service. MERPAC recommends that the Coast Guard develop an equivalency table for military personnel to demonstrate equivalent service. The table, MERPAC believes, will need to be sufficiently detailed to establish job tasks and actual underway time for application.

The Coast Guard agrees that the language in the NPRM is too restrictive and has retained the existing text. The provisions for ''sea service as a member of the armed forces'' were moved to proposed § 10.232. However, the Coast Guard disagrees that there is a need for a table showing equivalencies for military personnel because they are subject to the same STCW requirements set out in 46 CFR parts 11 and 12.

MERPAC recommends that the Coast Guard delete the term ''practical'' from

§ 11.401(i), which requires that, ''An applicant for his or her first deck officer endorsement authorizing service on vessels of 200 GRT/500 GT or more on ocean or near-coastal waters must pass a practical signaling examination (flashing light).''

In this SNPRM, we are proposing that mariners demonstrate their competence in practical signaling by completing a Coast Guard approved course. This change is consistent with the STCW Code, which specifies practical instruction as the only acceptable method of demonstrating competence.

MERPAC recommends that in § 11.407(a)(1), ''seagoing'' vessels should be deleted, because the language in this provision does not meet the language of the STCW Code. MERPAC believes it also exceeds the requirement of the STCW Code that requires 6 months of bridge watchkeeping duties. MERPAC also recommends that the Coast Guard delete the requirement of 6 months of service while holding an A/B endorsement or hold the rating of RFPNW.

The Coast Guard agrees and has amended the text accordingly. The Coast Guard separated the domestic and STCW licensing schemes into separate requirements. The STCW requirements are in the § 11.300 series and the domestic officer endorsements are in the § 11.400 series.

MERPAC recommends that OUPV applicants serving in the near vicinity of Puerto Rico, as stated in § 11.467(g) should be required to know standard maritime phrases and communications in English.

The Coast Guard disagrees. OUPVs are not required to meet the requirements of STCW and would not be required to meet the IMO Standard Marine Communication Phrases, which is found in the requirements in the STCW Code and was adopted by the 22d IMO Assembly in November 2001.

MERPAC feels there is an error in Figure 11.505(a) and suggests the Coast Guard add a path from DDE and assistant engineer into ships of 3,000 kW/4,000 HP. MERPAC also suggests adding a path into ships of 7,500 kW/10,000 HP and to invoke Article IX of the STCW Convention to resolve career path problems.

The STCW endorsements have been separated from the domestic endorsements in this SNPRM, and a table of entry paths is provided for each of the five STCW engineering levels. The 7,500 kW/10,000 HP domestic endorsement has been removed. Figure 11.505(a) is revised to reflect these changes.

MERPAC feels § 11.507 is too detailed.

The Coast Guard has removed the subject list from § 11.507 and now references the appropriate section of the STCW Code.

MERPAC believes there should be consistency and a harmonization of standards between deck and engine requirements that does not currently exist.

The Coast Guard has separated STCW and domestic endorsements and has harmonized the language with the STCW Convention. Deck and engine endorsements, while not completely identical, have been harmonized as far as practicable to ensure consistency.

MERPAC feels that § 11.520 needs some reference to non-STCW endorsements.

The STCW endorsements have been separated from the domestic endorsements in this SNPRM.

MERPAC recommends that § 11.551 be clarified in the preamble on the intent of meeting the language of § 11.553(b).

The Coast Guard has revised the sections on OSV endorsements to allow for the use of the various methods for meeting the STCW standard of competence for both STCW and domestic endorsements.

MERPAC recommends that the Coast Guard delete the words, ''through practical demonstration of professional skills'' from § 11.901(c), which deals with subjects of examinations and practical demonstrations of competence.

The Coast Guard agrees and has made this revision.

MERPAC recommends that the Coast Guard add requirements for all classifications of A/B endorsements listed in the U.S. Code.

The Coast Guard agrees and this SNPRM proposes to amend Part 12 to include all A/B endorsements included in the U.S. Code.

MERPAC recommends that the Coast Guard delete the term ''survivalman'' from § 12.412(f), which discusses general requirements for able seaman endorsements.

The Coast Guard has withdrawn its proposed use of the term ''survivalman'' and substitutes, in its place, lifeboatman-limited for the domestic endorsement. Regarding the STCW endorsement, the Coast Guard is proposing to use the term proficiency in survival craft and rescue boats other than lifeboats and fast rescue boats—limited (PSC—limited), to ensure consistency with the Convention.

MERPAC feels that, in § 12.420, the Coast Guard is imposing difficulties on applicants by requiring service to be only on seagoing vessels.

The Coast Guard agrees and proposes to grant sea service on other than ocean waters for STCW endorsements as follows: Great Lakes: Day-for-Day; and inland waters: 2 days of inland service equals 1 day of ocean service. The reason for the difference in service credit is based on the fact that Great Lakes service most closely resembles the length, breadth, equipment, and operation of ocean service.

MERPAC suggests that, in § 12.420, the term ''seagoing service'' needs clarification. MERPAC recommends that it should be re-phrased to read ''service onboard a ship relevant to the issue of a certificate or other qualification.''

The Coast Guard agrees and has revised the definition in § 10.107.

MERPAC recommends that § 12.420(c)(1)(ii) be deleted. MERPAC notes that this section requires at least one-half of the required experience (to obtain RFPNW certification) be obtained on vessels of at least 200 GRT/500 GT.

The Coast Guard has amended this section and is adopting the STCW language for seagoing service.

MERPAC recommends that the number of abandon ship drills required in § 12.610 be reduced, as 24 is excessive.

The Coast Guard agrees and has removed the requirement from this SNPRM because weekly abandon ship drills are built into the sea service requirements.

MERPAC recommends that the Coast Guard delete § 12.610(c)(2), which requires participation in abandon ship drills that must include the boat being placed in the water and being exercised in all means of propulsion.

The Coast Guard agrees and has removed this requirement from the SNPRM.

MERPAC recommends that the Coast Guard delete § 12.620(c), which requires participation in drills that must include a fast rescue boat being placed in the water and the applicant performing man-overboard recovery drills.

The Coast Guard agrees and has removed the requirement from the SNPRM.

MERPAC recommends that the Coast Guard delete § 12.630(c)(2), which requires participation in rescue boat, liferaft, or other drills involving lifesaving apparatus, and include a rescue boat being placed in the water and the mariner being exercised in rescue boat drills.

The Coast Guard agrees and has removed the requirement from the SNPRM because weekly abandon ship

drills are built into the sea service requirements.

MERPAC believes that § 12.630(d) should read ''course/program * * * that includes a prescribed period of sea service and BST''.

The Coast Guard is proposing to separate the domestic requirements for lifeboatman endorsements (found in §§ 12.407 and 12.409) from the STCW requirements for proficiency in survival craft endorsements (found in §§ 12.613 and 12.615). The Coast Guard partially agrees with the inclusion of the word ''course'' and has amended § 12.409 accordingly to replace the word ''program'' with ''course''. The Coast Guard agrees with the inclusion of the BST element in the requirements for the STCW endorsement and has amended § 12.615 accordingly.

MERPAC recommends that steward department should be added as an additional rating in § 12.704.

The Coast Guard agrees and has amended § 12.704 accordingly.

MERPAC recommends that the text of §§ 15.1103(b), 15.403(c), and 15.404(a), read as follows: ''All require a person serving as RFPNW to hold an STCW endorsement attesting to his or her qualifications to perform those functions. Those qualifications require 6 months of service, which can be reduced to a minimum of 60 days if the person has completed an approved course.''

The Coast Guard disagrees. Qualifications for RFPNW are found in § 12.605, and it is not appropriate to put them in part 15, which consists of manning requirements.

MERPAC notes that, adding to the barriers created by the STCW standards are interpretations imposed by the Coast Guard in Policy Letter 14–02 (which would be codified in proposed § 12.420) that require at least one-half the sea time to be on vessels of at least 200 GRT/500 GT. Beyond that, MERPAC believes the assessments for helm commands must now be performed on vessels of at least 100 GRT. These provisions mean that individuals who already have considerable experience on smaller vessels cannot use their service to qualify as RFPNW and apply for positions on larger vessels. Because qualifying service must be on seagoing vessels, mariners from the inland segment of the U.S. merchant marine are denied the opportunity to move offshore without having to go through the convoluted qualification process. STCW states in Chapter I under definitions that ''Seagoing service means service on board a ship relevant to the issue of a certificate or other qualification''. Thus, according to MERPAC, it is clear that the Administration can decide what is or is not relevant. MERPAC says its members have seen too many careers thwarted or never started due to the interpretations and language used. Many other countries provide liberal interpretations and thus promote seagoing opportunities and careers. Recognizing the difficulties presented by these provisions and other aspects of the 1995 amendments, the Secretary of Transportation at the time of the implementation of the current regulations declared that the Coast Guard would utilize the flexibility afforded by the Convention to mitigate some of the adverse effects. To that end, the Coast Guard stated that tonnages in the Convention would be applied as gross register tonnage for vessels in U.S. domestic service. MERPAC notes that the ''trigger tonnage'' of 500 gross tonnage for applicability of Regulation II/4 was to be interpreted as 500 GRT, citing a 1999 letter from the Chief of Marine Personnel, which states:

> * * * vessels of not more than 500 gross register tons on near coastal, domestic voyages will not be required to have seamen qualified as ratings forming part of a navigational watch because that STCW rating does not apply to vessels of less than 500 gross tons.

In view of the above, MERPAC recommends that the Coast Guard honor the agreement reached in 1999 and make the requirements for RFPNW applicable to vessels over 500 GRT/1,200 GT in domestic service. Vessels in international service will be bound by the STCW standard set at 200 GRT/500 GT.

The Coast Guard recognizes that the regulations and policies implementing the STCW requirements have been the subject of different interpretations, and is therefore issuing this SNPRM to ensure clarity of the regulations. This SNPRM proposes a new approach to implement the STCW Convention requirements. The SNPRM proposes to allow different methods for demonstrating competence as permitted by the STCW and appropriate to each individual competence.

Also, the Coast Guard proposes to grant sea service on other than ocean waters for STCW endorsements as follows: Those serving on Great Lakes waters will receive day-for-day credit. Those serving on inland waters will receive 1 day of ocean service credit for every 2 days of service.

Also, in order to align the regulations with the intent of the STCW Convention, we have adopted the STCW definition of ''seagoing service.''

With regard to the recommendation that the Coast Guard make the requirements for RFPNW applicable to vessels over 200 GRT/500 GT in domestic service, the Convention is clear in its application as it is stated in Regulation II/4, paragraph 1—''Every rating forming part of a navigational watch on a seagoing ship of 500 gross tonnage or more* * *''. Therefore, the Coast Guard must apply the requirements for RFPNW endorsements to service on vessels of 200 GRT or more.

MERPAC recommends that § 12.420(c)(ii) be deleted, that the assessment of helm commands be permitted on any vessel of more than 50 GRT, and that service on inland waters be acceptable to qualify for an assessment.

The Coast Guard agrees and has amended the requirements accordingly for an applicant for an endorsement as RFPNW. The RFPNW requirements in this SNPRM are contained in § 12.605.

MERPAC recommends that, in § 15.405, the term ''crewmember'' be deleted and that the term ''credentialed crewmember'' be used in its place.

The Coast Guard is retaining the existing text with some minor amendments. The existing text uses the term ''credentialed,'' and it is being retained in this SNPRM.

MERPAC recommends that, in § 15.530(a), the Coast Guard add language to ensure that the citation stays current by amending the paragraph as follows: ''ILO Convention or subsequent convention* * *'' MERPAC believes there must be a means of referencing the latest amendments to the Coast Guard's version of such international conventions without going through a laborious rulemaking processes.

By regulation, an incorporation by reference cannot incorporate successors to it. 1 CFR 51.1, which regulates how references are incorporated into regulations, states that incorporations by reference are limited to the edition of a publication that is approved for incorporation. It explicitly states, ''Future amendments or revisions of the publication are not included.''

MERPAC recommends that, in § 15.805(a)(5), the Coast Guard replace the phrase ''under the command of'' with the phrase ''command as Master''.

The Coast Guard disagrees. Subparagraph (5) must be read in conjunction with paragraph (a), which states that a master with the appropriate endorsement must be in command.

MERPAC recommends that, in § 15.815, the Coast Guard clarify the term ''valid'' endorsement for radar. MERPAC also believes that a school should be able to send proof of course completion.

The Coast Guard is retaining the existing text and adding a new paragraph to clarify the term ''readily available''. It is the responsibility of the mariner or his or her company to make the certificate of training available to the Coast Guard. The text does not prevent the mariner or company from obtaining the document from the school.

MERPAC recommends that the Coast Guard delete § 15.1101(c) that states that ''A vessel with a valid Safety Management Certificate and a copy of a Document of Compliance issued for that vessel under 46 U.S.C. 3205 is presumed to comply with the STCW Convention.''

The Coast Guard agrees and proposes to remove this section.

MERPAC recommends that, in § 15.1111, the Coast Guard change the title to read ''Rest Periods'', and that the Coast Guard should delete the words ''Work hours'' from the title as work hours are already addressed in § 15.701.

The Coast Guard disagrees, as this section addresses both work and rest periods.

MERPAC asks if, in § 15.1105, it is the master's obligation to check competency.

Section 15.1105 states that ''no person may assign any person to perform shipboard duties* * * and no person may perform those duties, unless the person performing them has received training, sufficient familiarization, or instruction.'' Ultimately, the master is the person responsible for ensuring that the person performing these duties has received the necessary training, sufficient familiarization, and instruction.

MERPAC recommends that, in § 15.1105(b)(2), the Coast Guard change the phrase ''relevant to his or her routine or emergency duties or responsibilities'' to ''relevant to his or her routine and emergency duties or responsibilities.''

The Coast Guard agrees and has made this change.

MERPAC recommends that the Coast Guard amend the title of part 10, subpart C to ''Approved courses and programs.''

The Coast Guard partially agrees and has amended the text to read ''Training courses and programs.'' It would be inappropriate to use ''approved'' in the title since the Subpart also includes requirements for ''Coast Guard-accepted courses.''

MERPAC recommends certain topics for the operational level in the 7,500 kW/10,000 HP category be added.

The 7,500 kW/10,000 HP domestic endorsement has been removed in this SNPRM.

MERPAC recommends that certain changes to the topic list be made for the engineering management level in § 11.511.

The specific list for these endorsements has been removed and now references the appropriate section in the STCW Code.

MERPAC recommends specific qualification standards for the various levels of domestic engineering endorsements of 7,500 kW/10,000 HP.

The 7,500 kW/10,000 HP domestic endorsement has been removed in this SNPRM.

MERPAC recommends three conversion provisions for persons holding chief engineer-limited oceans, chief engineer-limited near-coastal, and DDE unlimited horsepower to the proposed 7,500 kW/10,000 HP endorsements.

The 7,500 kW/10,000 HP domestic endorsement has been removed in this SNPRM.

The Coast Guard received comments in the following areas that address subjects beyond the scope of the revisions proposed in the NPRM. The Coast Guard does not discuss these comments in detail: Increasing user fees for oral examinations; Definition of ''invalid credential;'' Medical NVIC; Medical examination forms/requirements; Developing minimum standards for qualification; requirements for approved instructors; VSO course requirements; Adding tonnage to endorsements; language on COIs, Safety Management Certificates and SOLAS Passenger Safety Certificates; MMC issues (consolidating the MMC); Marine Safety Manual issues; TWIC issues; specific course content; and manning requirements.

VIII. Incorporation by Reference

Material proposed for incorporation by reference appears in §§ 10.103, 11.102, 12.103, 13.103, and 15.103. You may inspect this material at U.S. Coast Guard Headquarters where indicated under **ADDRESSES**. Copies of the material are available from the sources listed in §§ 10.103, 11.102, 12.103, 13.103, and 15.103.

Before publishing a binding rule, we will submit this material to the Director of the Federal Register for approval of the incorporation by reference.

IX. Regulatory Analyses

We developed this proposed rule after considering numerous statutes and executive orders related to rulemaking. Below we summarize our analyses based on 13 of these statutes or executive orders.

A. Regulatory Planning and Review

This proposed rule is a ''significant regulatory action'' under section 3(f) of Executive Order 12866, Regulatory Planning and Review, and requires an assessment of potential costs and benefits under section 6(a)(3) of that Order. The Office of Management and Budget has reviewed it under that Order.

A combined ''Preliminary Regulatory Analysis and Initial Regulatory Flexibility Analysis'' report is available in the docket as indicated under the **ADDRESSES** section of this preamble. A summary of the report follows:

This proposed rule would ensure that U.S. mariners comply with the standards set forth in the STCW Convention and Code. This proposed rule would implement all amendments under the Convention, including the 2010 amendments previously discussed. In addition, the Coast Guard is issuing the SNPRM to respond to the comments, feedback, and concerns received from the public as a result of the NPRM. In order to address those comments and concerns, the SNPRM would simplify domestic licensing requirements and separate them from STCW requirements; provide alternative means for demonstrating competence; clarify oversight requirements for approved courses; amend lifeboatmen requirements; and allow for acceptance of sea service on vessels serving the Great Lakes and inland waters to meet STCW requirements (see ''Discussion of Proposed Rule'' for additional details).

The changes in this SNPRM that result in additional impacts involve the following categories of provisions:

(1) *Medical Examinations and Endorsements*—The medical certificate would be reduced from a maximum period of validity of 5 years to 2 years for mariners serving on board STCW vessels in accordance with the 2010 amendments to the STCW Convention.

(2) *Leadership and Managerial Skills*—The proposed rule would require leadership and managerial skills for the management-level credential in accordance with the 2010 amendments to the STCW Convention.

(3) *Engine Room Resource Management (ERM)*—The proposed rule would require ERM training for engineers seeking operational-level credential, and leadership and managerial skills for the management-level credential in accordance with the 2010 amendments to the STCW Convention.

(4) *Tankerman Endorsements*—The proposed rule would add new STCW endorsements for basic and advanced

oil and chemical tanker cargo operations, and for basic and advanced liquefied gas tanker cargo operations, in accordance with the STCW 2010 amendments.

(5) *Safety Refresher Training Requirements*—The proposed rule would require safety refresher training for all STCW-endorsed mariners holding a credential in Basic Safety Training (BST), Advanced Firefighting, Proficiency in Survival Craft and Rescue Boats Other than Fast Rescue Boats (PSC), or Proficiency in Fast Rescue Boats every 5 years, in accordance with the 2010 amendments to the STCW Convention and Code.

(6) *Able Seafarer deck and engine*—The proposed rule would require that personnel serving on STCW vessels as able seafarer meet the requirements for certification in order to comply with the STCW 2010 amendments.

Costs

We estimate that this proposed rule would affect approximately 60,000 affected mariners and 316 owners and operators of 1,044 vessels with additional costs. Each of the proposed requirements would affect a different subset of these mariner and owner/operator populations. We used Coast Guard's data on mariners, publicly available information on training costs and mariner wages, and other available industry information to develop the estimates of potential costs to affected mariners and to the owners and operators employing affected mariners for each proposed requirement.

This proposed rule would also affect approximately 141 STCW training providers by requiring them to implement a quality standards system (QSS) and write and maintain a QSS manual; be subject to internal and external audit requirements of each Coast Guard-approved course, and extend the time period for which they must keep a paper or electronic record on each student completing a course.

The costs of the SNPRM are presented in Table 1. We estimate the total present value cost over the 10-year period of analysis to be $230.7 million at a 7 percent discount rate ($274.3 million at a 3 percent discount rate). Over the same 10-year period of analysis, we estimate the annualized costs to be about $32.8 million at a 7 percent discount rate ($32.2 million at a 3 percent discount rate).

TABLE 1—SUMMARY OF PRESENT VALUE COSTS OF PROPOSED RULE

[$Millions]

Year	Discount rate	
	7%	3%
1	$18.8	$19.5
2	39.0	42.1
3	36.4	40.8
4	34.0	39.7
5	31.8	38.5
6	29.8	37.4
7	11.3	14.7
8	10.6	14.3
9	9.9	13.8
10	9.2	13.4
Total*	230.7	274.3
Annualized	32.8	32.2

* Totals may not sum due to rounding.

We estimate the mariner training requirements are the primary cost driver throughout the 10-year period of analysis. See Table 2 for a summary of annualized costs by requirement category.

TABLE 2—SUMMARY OF THE ANNUALIZED COSTS OF THE PROPOSED RULE

[$Millions]

Category	Annualized*	
	7%	3%
Mariner Training**	$27.06	$26.40
2-Year Medical Examination	3.99	3.99
Sea Service	1.04	1.04
Training Providers	0.74	0.72
Total	32.83	32.15

** Includes changes for officer, engineer and rating endorsements.

The proposed changes to mariner training make up about 82% of the costs throughout the 10-year period of analysis. Table 3 below presents a summary of the costs by requirement as a percentage of the total annualized costs of the proposed rule.

TABLE 3—SUMMARY OF COSTS BY REQUIREMENT OF THE PROPOSED RULE

[As a percentage of annualized cost]

Requirements	Annualized cost %
Mariner Training	82
2-Year Medical Examination	13
Sea Service	3
Training Providers	2
Total	100

We believe that the training costs discussed above would likely be high estimates as the SNPRM provides flexibility in choosing alternative methods if these are more cost effective to the mariners, owners and operators (see the ''Economic comments—training requirements'' section for more detail).

In the absence of additional information, such as the choice of alternative methods by company size and time differences to complete one alternative compared to another, we estimate potential regulatory compliance costs by assuming that mariners and their employers would fulfill these requirements through classroom training. This results in upper-bound monetized costs for these training provisions.

Benefits

This SNPRM would implement all amendments to the STCW and ensure that the U.S. is meeting its obligations under the STCW Convention. The STCW Convention sets the standards of competence for mariners internationally, bringing U.S. mariners in line with training, certification and medical standards developed by the International Maritime Organization (IMO). In addition to the primary benefit of improving marine safety and a decrease in the risk of shipping accidents, additional benefits of this SNPRM are expected to accrue to the U.S. economy in the form of: (1) Preventing and mitigating accidents on STCW Convention-compliant foreign vessels in U.S. waters; (2) Maintaining U.S. status on the ''White List'' and avoiding the detention of U.S. vessels in foreign ports due to non-compliance with the STCW Convention; (3) Ensuring U.S. mariners can compete in the global workforce market; and (4) Providing consistent international performance standards based on international consensus and IMO convention, which minimizes variation in standards of training and watchkeeping.

One benefit of the proposed rule is an increase in vessel safety and a resulting decrease in the risk of shipping casualties. According to one study on the Review and Analysis of Accident Databases by the American Bureau of Shipping (ABS), the human element is involved in 80 percent of shipping casualties, with 45 percent of the casualties primarily due to human error, and another 35 percent in which humans failed to adequately respond.[2]

[2] Clifford C. Baker and Denise B. McCafferty. 2004. ABS Review and Analysis of Accident Databases. American Bureau of Shipping. Accessed

The proposed rule seeks to decrease human error and improve responsiveness through a three pronged approach—increased training and service requirements, consistency of training, and enhanced medical evaluation and reporting.

Lack of mariner competence in situational awareness and assessment are primary causes of human error. The enhanced competency and service requirements of the STCW Convention are expected to increase mariners' situational awareness and situational assessment. Mariners are also expected to be able to better respond to potential hazards.

The requirements for training providers to develop and follow a quality standard system help to ensure that the STCW training given to mariners is of consistent quality. Unidentified medical conditions can also impair a mariner's ability to perform tasks and respond, thus contributing to the human element of casualties. The proposed rule would require more frequent medical exams for STCW mariners, thus reducing the potential impacts of medical conditions on human error. In combination, the provisions of the proposed rule are expected to reduce potential for vessels accidents, both those with small and large consequences.

Based on data and information from the Coast Guard's Marine Information for Safety and Law Enforcement (MISLE) database system, between 2002 and 2009, there were an average of 11 fatalities and 126 injuries (ranging in severity) per year on U.S. flag SOLAS vessels that are the baseline damages that could be prevented or mitigated by this rulemaking. Likewise, pollution from incidents involving U.S. flag SOLAS vessels resulted in an annual average of 285,152 gallons of oil spilled per year that are the baseline damages that could be prevented or otherwise mitigated by this rulemaking. Table 4 summarizes the annual damages associated with fatalities, injuries, and oil spills for U.S. flag SOLAS vessels.

These estimates do not include quantified measures of secondary impacts that result from vessel accidents.

TABLE 4—ANNUAL BASELINE OF FATALITIES, INDUSTRIES, OIL SPILLS, AND PROPERTY DAMAGE

[2002–2009]

Impact	SOLAS
Fatalities	11.
Injuries	126.
Oil Spills	169.
Amount of Oil Spilled	285,152 gallons.
Property Damage	$25.7 million.
Congestion and Delays	Not quantified.

The training, sea service and QSS provisions of the proposed rule would most likely reduce the risk of accident-related consequences such as fatalities, injuries, and pollution. Estimating the precise reduction in risk from improved training and sea service requirements is difficult given existing information. We found limited information on how STCW, or other competency-based marine transportation training, quantitatively increases marine safety by reducing the risk of accidents.

We did find research conducted for other industries on the impact of training programs on outcomes and behaviors. This research found a wide range of potential reductions in risk: from a low of no impact to a high of approximately 87 percent. See the ''Regulatory Analysis and Initial Regulatory Flexibility Analysis'' report available on the docket for more information.

If the annual costs of $28.1 million we estimate for the cost of training and sea service requirements (exclusive of the QSS training provider requirements) are compared against the accident-related baseline damages for SOLAS vessels including fatalities, injuries, property damage and oil spilled, the proposed rule would have to reduce damages by 23.5 percent to reach break even. If fatalities only are included, the proposed rule would need to prevent approximately 4.6 fatalities per year to break even, out of about 11 total fatalities per year on SOLAS vessels. Accident-related fatalities represent approximately 20 percent of the total baseline damages.

The annualized cost of the training and sea service requirements (exclusive of the QSS training provider requirements) is approximately $28.1 million per year at a 7 percent discount rate (See Table 2 for a summary of annualized costs by requirement category). Based on the distribution of potential risk reduction derived from the studies described above applied to the baseline consequences of accident-related damages for U.S.-flagged, SOLAS vessels, we estimate the discounted, annualized benefits of the proposed rule could be about $24.3 million, with a range of $23.7 million to $29.4 million.

The medical examination requirements will also reduce risk—both for fatalities due to medical conditions and for the accident-related fatalities and oil spills. The incapacitation of mariners on vessels due to some medical and/or physical conditions causes public safety risks.

Data from the trucking industry indicates that certain medical conditions can increase the risk of accidents. For example, truck drivers with diabetes have a 19 percent higher risk of causing an accident. Similarly, drivers with cardio-vascular disease have a 43 percent greater risk of causing an accident.[3]

The more frequent medical exams can help ensure that medical conditions that could impair performance and increase the risk of an incident are identified and treated earlier, thus reducing the symptoms and side-effects that could cause decreased performance and increased risk of accidents.

The annual costs of the medical-related requirements are approximately $3.99 million at a 7 percent discount rate. If we compare this cost with the value of the 5 fatalities related to medical conditions, the proposed rule would need to result in a 12.7 percent reduction in risk to break even.

To summarize, we estimate the monetized annualized costs of the proposed rule to be about $32.8 million (at a 7 percent discount rate). However, we believe that this may likely be a high cost estimate as the SNPRM provides flexibility in choosing alternative methods of demonstrating competency if these are more cost effective to the mariners, owners and operators.

We considered four alternatives to this proposed rule:

- Alternative 1: Maintain the current STCW Convention interim rule
- Alternative 2: Implement the NPRM Proposed Requirements
- Alternative 3: Implement the SNPRM STCW-Related Proposed Requirements Only
- Alternative 4: Implement NPRM with Separate Rulemaking for 2010 STCW Amendments

The first alternative is not feasible as it would not meet all U.S. responsibilities as a party to the Convention. The second alternative would partially meet U.S.

at *http://www.slc.ca.gov/Division_Pages/MFD/Prevention_First/Documents/2004/Human%20and%20Organizational%20Factors/McCafferty%20paper.pdf*.

[3] Source: Final Rule Regulatory Evaluation, ''Medical Certification Requirements as Part of the Commercial Driver's License'', Final Rule, Federal Motor Carrier Safety Administration, July 2008 (FMCSA–1997–2210–0211.1).

responsibility, but would not implement the 2010 STCW amendments. The third alternative would meet the U.S. responsibilities under the STCW Convention, but would not provide clarifications and modification to domestic endorsements. The fourth alternative might not meet U.S. STCW responsibilities if the time and resources of a separate rulemaking extend beyond the deadline. Furthermore, Alternative 4 may not be efficient, as it would require multiple rulemaking efforts that amend the same requirements.

The ''Preliminary Regulatory Analysis and Initial Regulatory Flexibility Analysis'' report available on the docket provides additional detail on the alternatives, costs, and benefits of this rulemaking.

At this time, based on available information, we expect that this rulemaking would not be economically significant under Executive Order 12866 (e.g., have an annual effect on the economy of $100 million or more). The Coast Guard urges interested parties to submit comments that specifically address the economic impacts of this rulemaking. Comments can be made as indicated in the **ADDRESSES** section.

B. Small Entities

Under the Regulatory Flexibility Act (5 U.S.C. 601–612), we have considered whether this proposed rule would have a significant economic impact on a substantial number of small entities. The term ''small entities'' comprises small businesses, not-for-profit organizations that are independently owned and operated and are not dominant in their fields, and governmental jurisdictions with populations of less than 50,000.

An initial regulatory flexibility analysis (IRFA) discussing the impact of this proposed rule on small entities is included within the preliminary Regulatory Analysis document and is available in the docket where indicated under the **ADDRESSES** section of this preamble. A summary of the analysis follows:

The proposed rule would directly regulate mariners and training providers. Individuals, such as the mariners regulated by this rule are not small entities under the definition of a small entity in the Regulatory Flexibility Act (RFA).

The proposed rule includes audit and quality system requirements for training providers. Based on the Coast Guard data, approximately 84 percent of the STCW training providers that are affected by this proposed rule are small by the (SBA) size standards.

While we do not expect training providers to offer new training programs unless it is beneficial to their business model, we have estimated the impact of the proposed rule to training providers as if they would not pass any of their costs to mariners. Therefore, the revenue impacts to the small training providers discussed below may be overestimates.

We found that this proposed rule would have a significant economic impact (more than 1 percent impact on revenue) on 67 percent of small training providers in the first year. After the first year, we found that the proposed rule would have a significant economic impact on 40 percent of small training providers.

As previously discussed in the ''Economic comments—training requirements'' section, we received comments about costs for STCW training requirements that are absorbed not by mariners, but their employers. The proposed rule does not directly require companies or maritime employers to pay for the proposed training requirements for affected mariners. However, we acknowledge that some marine employers fund training and might be indirectly impacted. In recognition of this possibility, we have modified the analysis of impacts on small entities in the Initial Regulatory Flexibility Analysis to include a sensitivity analysis showing the impact of additional training costs on employers of mariners.

Based on this sensitivity analysis, we found that about 80 percent of the vessel owners and operators affected by this rule would be small entities under the Regulatory Flexibility Act and the Small Business Administration (SBA) size standards. We estimate that the proposed rule would have a more than 1 percent cost impact on annual revenue for 69 to 83 percent of the small vessel owners and operators affected by this rulemaking, depending on the year.

However, under the SNPRM, the Coast Guard would accept various, flexible methods for demonstrating competence that would reduce the costs of training requirements proposed in the November 17, 2009 NPRM, a potential cost relief to maritime employers that fund training.

We are interested in the potential impacts from this proposed rule on small businesses and we request public comment on these potential impacts. If you think that your business, organization, or governmental jurisdiction qualifies as a small entity and that this rulemaking would have a significant economic impact on it, please submit a comment to the Docket Management Facility at the address under **ADDRESSES**. In your comment, explain why you think it qualifies and how and to what degree this rule would economically affect it.

C. Assistance for Small Entities

Under section 213(a) of the Small Business Regulatory Enforcement Fairness Act of 1996 (Pub. L. 104–121), we want to assist small entities in understanding this proposed rule so that they can better evaluate its effects on them and participate in the rulemaking. If the proposed rule would affect your small business, organization, or governmental jurisdiction and you have questions concerning its provisions or options for compliance, please consult Ms. Zoe Goss, Maritime Personnel Qualifications Division, Coast Guard; telephone 202–372–1425. The Coast Guard will not retaliate against small entities that question or complain about this rule or any policy or action of the Coast Guard.

Small businesses may send comments on the actions of Federal employees who enforce, or otherwise determine compliance with, Federal regulations to the Small Business and Agriculture Regulatory Enforcement Ombudsman and the Regional Small Business Regulatory Fairness Boards. The Ombudsman evaluates these actions annually and rates each agency's responsiveness to small business. If you wish to comment on actions by employees of the Coast Guard, call 1–888–REG–FAIR (1–888–734–3247).

D. Collection of Information

This proposed rule would call for modifications to collections of information under the Paperwork Reduction Act of 1995 (44 U.S.C. 3501–3520). It would modify two existing Office of Management and Budget (OMB) Collection of Information: OMB Control Number 1625–0028, ''Course Approvals for Merchant Marine Training Schools''; and, OMB Control Number 1625–0079, ''Standards of Training, Certification and Watchkeeping for Seafarers (STCW), 1995 and 1997 Amendments to the International Convention''.

As defined in 5 CFR 1320.3(c), ''collection of information'' comprises reporting, recordkeeping, monitoring, posting, labeling, and other, similar actions. The title and description of the information collections, a description of those who must collect the information, and an estimate of the total annual burden follow. The estimate covers the time for reviewing instructions, searching existing sources of data,

gathering and maintaining the data needed, and completing and reviewing the collection.

This proposed rule would add to recordkeeping requirements of training providers and credentialed merchant mariners.

Title: Course Approval and Records for Merchant Mariner Training Schools.

OMB Control Number: 1625–0028

Title 46 United States Code (U.S.C.) 7315 authorizes a license or document applicant to substitute the completion of an approved course for a portion of the required sea service. Title 46 Code of Federal Regulations (CFR) 10.402 specifies the information that must be submitted for the Coast Guard to evaluate and approve each course. Title 46 Code of Federal Regulations (CFR) 10.403 specifies recordkeeping requirements that a school teaching approved courses must meet for each student taking each course.

Under the proposed rule, training providers that teach STCW Convention courses would: (1) Develop and maintain a QSS, including writing and maintaining a QSS manual; (2) Undergo an internal audit and undergo an external audit every 5 years and keep the audit records for Coast Guard inspection as needed; and (3) Store student course records for an additional 4 years.

Since training providers are currently required to store student records for 1 year and many of them store records for several years more, the burden of the new requirement that would extend recordkeeping from 1 year to 5 years is small.

Summary of the Collection of Information: A licensed mariner is authorized to substitute the completion of an approved course for a portion of the required sea service. Training providers must submit specific information to the Coast Guard to evaluate and approve each course.

The proposed rule would require training providers to write and maintain a QSS manual and arrange two internal audits of STCW Convention courses within 5 years.

Need for Information: The information is necessary to show evidence that training providers meet the quality, minimum standard and recordkeeping requirements of each STCW Convention course as established by the International Maritime Organization (IMO).

Proposed Use of Information: The Coast Guard would use this information to document that the training level of mariners meets international requirements.

Description of the Respondents: The respondents are the mariner training schools that would be required to complete form CG–719B.

Number of Respondents: According to the US Coast Guard national Maritime Center (NMC), there are approximately 285 training schools. However, only 141 training providers teach STCW courses. The number of respondents is 141 STCW training providers in the first year and recurring annually.

Frequency of Response: Respondents are required to write a QSS manual in the first year and modify it as needed. They would also arrange internal audits on their STCW courses every two and a half years.

Burden of Response: Writing a QSS manual would take a training provider approximately 206 hours in the first year (205 hours for reporting and 1 hour for recordkeeping), and modifying it would take 9 hours every year (8 hours for reporting and 1 hour recordkeeping). We estimate that it would take 10 hours for each respondent to complete an internal audit twice every 5 years (9 hours for reporting and 1 hour for recordkeeping.

Estimate of Total Annual Burden: The existing OMB-approved total annual burden, as adjusted in January 2009, is 97,260 hours. This rule would increase the burden for 141 training providers by approximately 225 hours each. The total additional hours requested for this rulemaking is 31,725 [141 × (206 + 9 +10)]. The new annual burden for the first year is 29,046 hours and about 1,833 hours each year after the first year.

Title: Standards of Training, Certification and Watchkeeping for Seafarers (STCW), 1995 and 1997 Amendments to the International Convention.

OMB Control Number: 1625–0079

The International Convention for Standards of Training, Certification and Watchkeeping for Seafarers (STCW) sets qualifications for masters, officers and watchkeeping personnel on seagoing merchant ships. The United States is a signatory to these conventions, which define standards of competence necessary to protect safety of life at sea and the marine environment and address the responsibilities of all State-Parties to ensure seafarers meet defined standards of competence and quality. The information collection requirements are necessary to implement the amendments to this important international convention.

This proposed regulation is making three changes which impact this collection. This proposed regulation would: (1) Change the medical exam requirements for STCW credentialed mariner from once every five years to once every two years; (2) Require documented evidence of security training or awareness for 2 groups of mariners—personnel with security duties (except Vessel Security Officers, VSO) and all other mariners working aboard a vessel; and, (3) Recognize STCW endorsements issued by foreign governments.

For changes in medical examination requirements, mariners would be required to submit to NMC form CG–719K as filled out by a physician. For documented evidence of security training or awareness for personnel, vessel owners/operators would need to provide documentary evidence that personnel with security duties other than VSOs meet requirements set forth in 33 CFR 104.220, provide documentary evidence of meeting the requirements of 33 CFR 104.225 for all other personnel working on a vessel. Additionally the proposed rule allows for the recognition of STCW endorsements issued by foreign governments given proper documentation is submitted by a vessel owner/operator.

Summary of the Collection of Information: The STCW Convention sets qualifications for mariners on seagoing merchant ships. As a signatory party, information must be collected to provide documentary evidence that demonstrates requirements described in this important international treaty are being met.

This proposed regulation, which adopts 2010 amendments to the STCW convention, requires STCW mariners to provide documentation of a medical exam occurring once every two years; establishes the need for documentary evidence certifying security training or awareness for personnel; and, provides the means to recognize STCW endorsements issued by foreign governments.

Need for Information: The collection of information is needed to ensure that mariners have completed training and medical assessment necessary to receive STCW certification or endorsement. Collection of information is also needed to demonstrate to the International Maritime Organization that the United States has in place certain specific regulations that implement the international requirements and related amendments to the STCW convention.

Proposed Use of Information: The information collected will help to ensure compliance with international requirements and to maintain acceptable quality in activities associated with training and assessment of merchant mariners.

Description of the Respondents: The respondents would be merchant mariners holding STCW endorsements who need to update their medical records with NMC and the vessel owner/operators employing STCW endorsed mariners.

Number of Respondents: According to Coast Guard NMC data, an estimated 60,000 merchant mariners hold STCW endorsements. Of those mariners, approximately 12,000 submit medical examination forms each year. Since the proposed regulation requires medical exams every two years, the number of additional mariners needing to respond each year would be 18,000.

This proposed rule would also require employers of STCW endorsed mariners to submit documentary evidence of security training or awareness. Approximately 316 employers would need to submit this one-time requirement for 23,413 mariners—12,020 mariners who fall under 33 CFR 104.220 and for 11,393 mariners who fall under 33 CFR 104.225.

Additionally, approximately 105 owner/operators and approximately 1,800 mariners holding STCW endorsements issued by foreign governments would need to respond.

Frequency of Response: For medical examination requirements, mariners are required to respond every two years. We would assume half of the mariner population to respond annually. Mariners would need to make a one-time response that includes the proof of meeting the security training or knowledge requirement. Credentials for mariners holding foreign-issue STCW endorsements are valid for 5 years and response would be once every 5 years.

Burden of Response: For medical examinations, filling out form CG–719K takes approximately 20 minutes to complete and submitting that form by the mariner would take approximately 5 minutes. Total response burden would be approximately 25 minutes.

For personnel with security training, we estimate it would take employers 15 minutes per mariner to provide documentary evidence of security training or awareness.

For mariners with STCW endorsements issued by foreign governments, filling out form CG–719B takes approximately 15 minutes to complete.

Estimate of Total Annual Burden: For medical examinations, existing OMB-approved total annual burden, as adjusted in July 2009, is 22,440 hours. This rule would increase the annual burden by 7,950 hours (7,500 hrs. for medical exams + 450 hrs. for foreign-issued STCW endorsements). Additionally, this proposed rule would impose a one-time burden of 5,853 hours on owner/operators to provide documentary evidence of training.

This proposed rule would increase the annual burden on 18,000 respondents submitting medical examination forms by approximately 25 minutes each. The total additional hours requested for this rulemaking is 7,500 [18,000 × (25/60)]. For the approximately 1,800 mariners holding STCW endorsements issued by foreign governments, this proposed rule would increase the annual burden by 105 respondents by approximately 15 minutes each. The total additional hours requested for this rulemaking is 450 [1,800 × (15/60)]. For other personnel with security training or awareness, this one-time requirement would impose a burden on 316 respondents by 15 minutes each, or approximately 5,853 hours [23,413 mariners × (15/60)].

As required by the Paperwork Reduction Act of 1995 (44 U.S.C. 3507(d)), we will submit a copy of this proposed rule to the Office of Management and Budget (OMB) for its review of the collection of information.

We ask for public comment on the proposed collections of information to help us determine how useful the information is; whether it can help us perform our functions better; whether it is readily available elsewhere; how accurate our estimate of the burden of each collection is; how valid our methods for determining burden are; how we can improve the quality, usefulness, and clarity of the information; and how we can minimize the burden of collection.

If you submit comments on the collection of information, submit them to both OMB and to the Docket Management Facility where indicated under **ADDRESSES**, by the date under **DATES**.

You need not respond to a collection of information unless it displays a currently valid control number from OMB. Before the Coast Guard could enforce the collection of information requirements in this proposed rule, OMB would need to approve the Coast Guard's request to collect this information.

E. Federalism

A rule has implications for federalism under Executive Order 13132, Federalism, if it has a substantial direct effect on State or local governments and would either preempt State law or impose a substantial direct cost of compliance on them.

It is well settled that States may not regulate in categories reserved for regulation by the Coast Guard. It is also well settled that all of the categories covered in 46 U.S.C. 3306, 3703, 7101, and 8101 (design, construction, alteration, repair, maintenance, operation, equipping, personnel qualification, and manning of vessels), as well as the reporting of casualties and any other category in which Congress intended the Coast Guard to be the sole source of a vessel's obligations, are within the field foreclosed from regulation by the States. (See the decision of the Supreme Court in the consolidated cases of *United States* v. *Locke and Intertanko* v. *Locke,* 529 U.S. 89, 120 S.Ct. 1135 (March 6, 2000).)

This proposed rule would not extend Federal jurisdiction into those areas of pilotage that are reserved to the States in 46 U.S.C. 8501. Section 8501 provides for State regulation of pilots in the bays, rivers, harbors, and ports of the U.S. unless the law specifies otherwise. This proposed rule would change the requirements for the credentialing of mariners and would impact manning. In *United States* v. *Locke,* the Supreme Court references the STCW Convention as evidence that such areas are exclusively Federal, stating: ''That training is a field reserved to the Federal Government is further confirmed by the circumstance that the STCW Convention addresses crew 'training' and 'qualification' requirements, and that the United States has enacted crew training regulations.'' *United States* v. *Locke and Intertanko* v. *Locke,* 529 U.S. 89, 120 S.Ct. 1135 (March 6, 2000). Because the States may not regulate within these categories, preemption under Executive Order 13132 is not an issue.

F. Unfunded Mandates Reform Act

The Unfunded Mandates Reform Act of 1995 (2 U.S.C. 1531–1538) requires Federal agencies to assess the effects of their discretionary regulatory actions. In particular, the Act addresses actions that may result in the expenditure by a State, local, or tribal government, in the aggregate, or by the private sector of $100,000,000 (adjusted for inflation) or more in any one year. Though this proposed rule would not result in such an expenditure, we do discuss the effects of this rule elsewhere in this preamble.

G. Taking of Private Property

This proposed rule would not cause a taking of private property or otherwise have taking implications under Executive Order 12630, Governmental Actions and Interference with Constitutionally Protected Property Rights.

H. Civil Justice Reform

This proposed rule meets applicable standards in sections 3(a) and 3(b)(2) of Executive Order 12988, Civil Justice Reform, to minimize litigation, eliminate ambiguity, and reduce burden.

I. Protection of Children

We have analyzed this proposed rule under Executive Order 13045, Protection of Children from Environmental Health Risks and Safety Risks. This rule is not an economically significant rule and would not create an environmental risk to health or risk to safety that might disproportionately affect children.

J. Indian Tribal Governments

This proposed rule does not have tribal implications under Executive Order 13175, Consultation and Coordination with Indian Tribal Governments, because it would not have a substantial direct effect on one or more Indian tribes, on the relationship between the Federal Government and Indian tribes, or on the distribution of power and responsibilities between the Federal Government and Indian tribes.

K. Energy Effects

We have analyzed this proposed rule under Executive Order 13211, Actions Concerning Regulations That Significantly Affect Energy Supply, Distribution, or Use. We have determined that it is not a ''significant energy action'' under that order. Though it is a ''significant regulatory action'' under Executive Order 12866, it is not likely to have a significant adverse effect on the supply, distribution, or use of energy. The Administrator of the Office of Information and Regulatory Affairs has not designated it as a significant energy action. Therefore, it does not require a Statement of Energy Effects under Executive Order 13211.

L. Technical Standards

The National Technology Transfer and Advancement Act (NTTAA) (15 U.S.C. 272 note) directs agencies to use voluntary consensus standards in their regulatory activities unless the agency provides Congress, through the Office of Management and Budget, with an explanation of why using these standards would be inconsistent with applicable law or otherwise impractical. Voluntary consensus standards are technical standards (e.g., specifications of materials, performance, design, or operation; test methods; sampling procedures; and related management systems practices) that are developed or adopted by voluntary consensus standards bodies.

This proposed rule does not use technical standards. Therefore, we did not consider the use of voluntary consensus standards.

M. Environment

We have analyzed this proposed rule under Department of Homeland Security Management Directive 023–01 and Commandant Instruction M16475.lD, which guide the Coast Guard in complying with the National Environmental Policy Act of 1969 (NEPA) (42 U.S.C. 4321–4370f), and have made a preliminary determination that this action is one of a category of actions that do not individually or cumulatively have a significant effect on the human environment. A preliminary environmental analysis checklist supporting this determination is available in the docket where indicated under the ''Public Participation and Request for Comments'' section of this preamble. This rule involves regulations that are procedural and the training of maritime personnel. We seek any comments or information that may lead to the discovery of a significant environmental impact from this proposed rule.

List of Subjects

46 CFR Part 1

Administrative practice and procedure, Organization and functions (Government agencies), Reporting and recordkeeping requirements.

46 CFR Part 10

Incorporation by reference, Penalties, Reporting and recordkeeping requirements, Schools, Seamen.

46 CFR Part 11

Incorporation by reference, Penalties, Reporting and recordkeeping requirements, Schools, Seamen, Transportation Worker Identification Card.

46 CFR Part 12

Incorporation by reference, Penalties, Reporting and recordkeeping requirements, Seamen.

46 CFR Part 13

Cargo vessels, Incorporation by reference, Reporting and recordkeeping requirements, Seamen.

46 CFR Part 14

Oceanographic research vessels, Reporting and recordkeeping requirements, Seamen.

46 CFR Part 15

Incorporation by reference, Reporting and recordkeeping requirements, Seamen, Vessels.

For the reasons discussed in the preamble, the Coast Guard proposes to amend 46 CFR parts 1, 10, 11, 12, 13, 14, and 15 as follows:

TITLE 46 CFR—SHIPPING

PART 1—ORGANIZATION, GENERAL COURSE AND METHODS GOVERNING MARINE SAFETY FUNCTIONS

1. The authority citation for part 1 continues to read as follows:

Authority: 5 U.S.C. 552; 14 U.S.C. 633; 46 U.S.C. 7701; 46 U.S.C. Chapter 93; Pub. L. 107–296, 116 Stat. 2135; Department of Homeland Security Delegation No. 0170.1; § 1.01–35 also issued under the authority of 44 U.S.C. 3507.

§ 1.03–40 [Amended]

2. In § 1.03–40, after the words ''make a formal appeal of that decision or action'', remove the text '', via the NMC,''.

PART 10—MERCHANT MARINER CREDENTIAL

3. Revise the authority citation for part 10 to read as follows:

Authority: 14 U.S.C. 633; 31 U.S.C. 9701; 46 U.S.C. 2101, 2103, 2110; 46 U.S.C. chapter 71; 46 U.S.C. chapter 73; 46 U.S.C. chapter 75; 46 U.S.C. 2104; 46 U.S.C. 7701, 8903, 8904, and 70105; Executive Order 10173; Department of Homeland Security Delegation No. 0170.1.

4. Amend § 10.101 as follows:

a. Revise the heading to read as set down below;

b. In paragraph (b), remove the word ''their'' and add, in its place, the words ''his or her''; and

c. In paragraph (d), remove the words ''holder of'' and add, in their place, the words ''applicant for''.

§ 10.101 Purpose.

* * * * *

§ 10.103 [Amended]

5. Amend § 10.103 as follows:

a. In paragraph (b)(1), after the words ''incorporation by reference approved for'' remove the section numbers ''§§ 10.107, 10.109, and 10.231'' and add, in their place, the section numbers ''§§ 10.107, 10.109, 10.201, and 10.410''; and

b. In paragraph (b)(2), after the words ''incorporation by reference approved for'' remove the section numbers ''§§ 10.107, 10.109, 10.227, and 10.231'' and add, in their place, the section numbers ''§§ 10.107, 10.109, 10.201, 10.404, 10.411, and 10.412''.

6. Revise § 10.107 to read as follows:

§ 10.107 Definitions in subchapter B.

(a) With respect to part 16 of this subchapter only, if the definitions in paragraph (b) of this section differ from those set forth in § 16.105, the definition set forth in § 16.105 applies.

(b) As used in this subchapter, the following terms apply only to merchant marine personnel credentialing and the manning of vessels subject to the manning provisions in the navigation and shipping laws of the United States:

Apprentice mate (steersman) of towing vessels means a mariner qualified to perform watchkeeping on the bridge, while in training onboard a towing vessel under the direct supervision and in the continuous presence of a master or mate (pilot) of towing vessels.

Apprentice mate (steersman) of towing vessels (utility) means a mariner qualified to perform watchkeeping on the bridge, while in training onboard a towing vessel under the direct supervision and in the continuous presence of a master or mate (pilot) of towing vessels or a master of towing vessels (utility).

Approved means approved by the Coast Guard.

Approved training means training that is approved by the Coast Guard or meets the requirements of § 10.408 of this part.

Articulated tug barge or *ATB* means any tug-barge combination which through the use of an articulated or ''hinged'' connection system between the tug and barge allows movement in one axis, or plane in the critical area of fore and aft pitch.

Assistance towing means towing a disabled vessel for consideration.

Assistant engineer, for domestic endorsements, means a qualified officer in the engine department other than the chief engineer.

Authorized official includes, but is not limited to, a Federal, State, or local law enforcement officer.

Ballast control operator or *BCO* means an officer restricted to service on mobile offshore drilling units (MODUs) whose duties involve the operation of the complex ballast system found on many MODUs. When assigned to a MODU, a ballast control operator is equivalent to a mate on a conventional vessel.

Barge means a non-self-propelled vessel as defined in 46 U.S.C. 102.

Barge supervisor or *BS* means an officer restricted to service on MODUs whose duties involve support to the offshore installation manager (OIM) in marine-related matters including, but not limited to, maintaining watertight integrity, inspecting and maintaining mooring and towing components, and maintaining emergency and other marine-related equipment. A barge supervisor, when assigned to a MODU, is equivalent to a mate on a conventional vessel.

Boatswain means the leading seaman and immediate supervisor of deck crew who supervises the maintenance of deck gear.

Boundary lines are specified in 46 CFR part 7.

Cargo engineer means a person holding an officer endorsement on a dangerous-liquid tankship or a liquefied-gas tankship whose primary responsibility is maintaining the cargo system and cargo-handling equipment.

Ceremonial license means a document that reflects a mariner's existing domestic officer endorsement and is suitable for framing, but is not valid for use as a Merchant Mariner Credential (MMC).

Chief engineer means the senior engineer responsible for the mechanical propulsion and the operation and maintenance of the mechanical and electrical installations of the vessel.

Chief mate means the deck officer next in rank to the master and upon whom the command of the vessel will fall in the event of incapacity of the master.

Coast Guard-accepted means:

(1) That the Coast Guard has officially acknowledged in writing that the material or process at issue meets the applicable requirements;

(2) That the Coast Guard has issued an official policy statement listing or describing the material or process as meeting the applicable requirements; or

(3) That an entity acting on behalf of the Coast Guard under a Memorandum of Agreement has determined that the material or process meets the applicable requirements.

Coast Guard-accepted QSS organization means an entity that has been approved by the Coast Guard to accept and monitor training on behalf of the Coast Guard.

Coastwise seagoing vessel means a vessel that is authorized by its Certificate of Inspection to proceed beyond the Boundary Line established in part 7 of this chapter.

Coastwise voyage is a domestic voyage and means a voyage in which a vessel proceeds:

(1) From one port or place in the United States to another port or place in the United States;

(2) From a port or place in a United States possession to another port or place in the same possession, and passes outside the line dividing inland waters from the high seas; or

(3) From a port or place in the United States or its possessions and passes outside the line dividing inland waters from the high seas and navigates on the high seas, and then returns to the same port or place.

Conviction means that the applicant for a merchant mariner credential has been found guilty, by judgment or plea by a court of record of the United States, the District of Columbia, any State, territory, or possession of the United States, a foreign country, or any military court, of a criminal felony or misdemeanor or of an offense described in section 205 of the National Driver Register Act of 1982, as amended (49 U.S.C. 30304). If an applicant pleads guilty or no contest, is granted deferred adjudication, or is required by the court to attend classes, make contributions of time or money, receive treatment, submit to any manner of probation or supervision, or forgo appeal of a trial court's conviction, then the Coast Guard will consider the applicant to have received a conviction. A later expungement of the conviction will not negate a conviction unless the Coast Guard is satisfied that the expungement is based upon a showing that the court's earlier conviction was in error.

Credential means any or all of the following:

(1) Merchant mariner's document.

(2) License.

(3) STCW endorsement.

(4) Certificate of registry.

(5) Merchant Mariner Credential.

Criminal record review means the process or action taken by the Coast Guard to determine whether an applicant for, or holder of, a credential is a safe and suitable person to be issued such a credential or to be employed on a vessel under the authority of such a credential.

Dangerous drug means a narcotic drug, a controlled substance, or a controlled-substance analogue (as defined in section 102 of the Comprehensive Drug Abuse and Control Act of 1970 (21 U.S.C. 802)).

Dangerous liquid or *DL* means a liquid listed in 46 CFR 153.40 of this chapter that is not a liquefied gas as defined in this part. Liquid cargoes in bulk listed in 46 CFR part 153, Table 2, of this chapter are not dangerous-liquid cargoes when carried by non-oceangoing barges.

Day means, for the purpose of complying with the service requirements of this subchapter, 8 hours of watchstanding or day-working not to include overtime. On vessels authorized by 46 U.S.C. 8104 and 46 CFR 15.705, to operate a two-watch system, a 12-hour working day may be creditable as

1 ½ days of service. On vessels of less than 100 GRT, a day is considered as 8 hours unless the Coast Guard determines that the vessel's operating schedule makes this criteria inappropriate; in no case will this period be less than 4 hours. When computing service on MODUs for any endorsement, a day of MODU service must be a minimum of 4 hours, and no additional credit is received for periods served over 8 hours.

Deck crew (excluding individuals serving under their officer endorsement) means, as used in 46 U.S.C. 8702, only the following members of the deck department: able seamen, boatswains, and ordinary seamen.

Deck department means the department aboard a ship responsible for navigation, cargo, command, and control functions.

Designated areas means those areas within pilotage waters for which first-class pilot's endorsements are issued under part 11, subpart G, of this chapter, by the Officer in Charge, Marine Inspection (OCMI). The areas for which first-class pilot's endorsements are issued within a particular Marine Inspection Zone and the specific requirements to obtain them may be obtained from the OCMI concerned.

Designated duty engineer or *DDE* means a qualified engineer, who may be the sole engineer on vessels with a periodically unmanned engine room.

Designated examiner or *DE* means a person who has been trained or instructed in techniques of training or assessment on towing vessels and is otherwise qualified to evaluate whether an applicant has achieved the level of proficiency required to hold a towing vessel endorsement on a merchant mariner credential (MMC). This person may be approved by the Coast Guard or by a Coast Guard-approved or -accepted program of training.

Designated medical examiner means a licensed physician, licensed physician's assistant, or licensed nurse practitioner who has been trained and approved to conduct medical and physical examinations of merchant mariners on behalf of the U.S. Coast Guard and may be delegated limited authority to grant waivers and approve physical/medical suitability for service.

Directly supervised (only when referring to issues related to tankermen) means being in the direct line of sight of the person-in-charge or maintaining direct, two-way communications by a convenient, reliable means, such as a predetermined working frequency over a handheld radio.

Disabled vessel means a vessel that needs assistance, whether docked, moored, anchored, aground, adrift, or underway, but does not mean a barge or any other vessel not regularly operated under its own power. This includes, but is not limited to, a vessel that needs support or aid from another vessel (or vessels) to achieve completion of a maneuver or a portion of a transit safely, or when vessel safety is at risk such as mechanical difficulty, weather conditions, port/waterway congestion, or vessel maneuvering constraints.

Document of Continuity means a document issued by the Coast Guard to seafarers who are unwilling or otherwise unable to meet the requirements of § 10.227 for the sole purpose of maintaining an individual's eligibility for renewal of an endorsement.

Domestic officer endorsement means an annotation on a merchant mariner credential that allows a mariner to serve in the capacities listed in § 10.109(a) of this part. The officer endorsement serves as the license and/or certificate of registry pursuant to 46 U.S.C. subtitle II part E.

Domestic rating endorsement means an annotation on a merchant mariner credential that allows a mariner to serve in those capacities set out in § 10.109(b) and (c) of this part. The rating endorsement serves as the merchant mariner's document pursuant to 46 U.S.C. subtitle II part E.

Domestic voyage means a voyage from one United States port to another United States port, without entering waters under the jurisdiction of another country. This includes a voyage to nowhere that returns to the originating port.

Drug test means a chemical test of an individual's urine for evidence of dangerous drug use.

Dual-mode integrated tug barge means an Integrated Tug Barge (ITB) involving an articulated (flexible) coupling system where the towing unit rolls and heaves (articulates) about a horizontal pivot point. Dual mode units resemble a conventional tug and are capable of towing in other configurations (astern or alongside).

Employment assigned to means the total period of time a person is assigned to work on MODUs, including time spent ashore as part of normal crew rotation.

Endorsement is a statement of a mariner's qualifications, which may include the categories of officer, staff officer, ratings, and/or STCW appearing on a merchant mariner credential.

Engine department means the department aboard a ship responsible for the main propulsion and auxiliary systems, and other mechanical, electrical, hydraulic, and refrigeration systems, including deck machinery and cargo-handling equipment.

Entry-level mariner means a mariner holding no rating other than ordinary seaman, wiper, steward's department, or steward's department food handler (F.H.).

Evaluation means processing an application, from the point of receipt to approval or denial of the application, including review of all documents and records submitted with an application as well as those obtained from public records and databases.

Fails a chemical test for dangerous drugs means that the result of a chemical test conducted under 49 CFR part 40 was reported as ''positive'' by a Medical Review Officer because the chemical test indicated the presence of a dangerous drug at a level equal to or exceeding the levels established in 49 CFR part 40.

First assistant engineer means the engineer officer next in rank to the chief engineer and upon whom the responsibility for the mechanical propulsion and the operation of maintenance of the mechanical and electrical installations of the vessel will fall in the event of the incapacity of the chief engineer.

Great Lakes for the purpose of calculating service requirements for an endorsement, means the Great Lakes and their connecting and tributary waters, including the Calumet River as far as the Thomas J. O'Brien Lock and Controlling Works (between miles 326 and 327), the Chicago River as far as the east side of the Ashland Avenue Bridge (between miles 321 and 322), and the Saint Lawrence River as far east as the lower exit of Saint Lambert Lock. For purposes of requiring merchant mariner credentials with rating endorsements, the connecting and tributary waters are not part of the Great Lakes.

Gross register tons or *GRT* means the gross ton measurement of the vessel under 46 U.S.C. chapter 145, Regulatory Measurement.

Gross tonnage or *GT* means the gross tonnage measurement of the vessel under 46 U.S.C. chapter 143, Convention Measurement.

Harbor assist means the use of a towing vessel during maneuvers to dock, undock, moor, or unmoor a vessel, or to escort a vessel with limited maneuverability. This term refers to towing vessels assisting ships rather than to assistance towing vessels assisting yachts and recreational boats.

Horsepower or *HP* means, for the purpose of this subchapter, the total maximum continuous shaft horsepower of the entire vessel's main propulsion

machinery as determined by the manufacturer. This term is used when describing a vessel's propulsion power and also when placing limitations on an engineer officer license or endorsement. One horsepower equals 0.75 kW.

IMO means the International Maritime Organization.

Increase in scope means additional authority added to an existing credential.

Inland waters means the navigable waters of the United States shoreward of the Boundary Lines as described in part 7 of this chapter, excluding the Great Lakes, and, for towing vessels, excluding the Western Rivers. For establishing credit for sea service, the waters of the Inside Passage between Puget Sound and Cape Spencer, Alaska, are inland waters.

Integrated Tug Barge or *ITB* means any tug-barge combination which, through the use of special design features or a specially designed connection system, has increased seakeeping capabilities relative to a tug and barge in the conventional pushing mode. An ITB can be divided into either a dual-mode ITB or a push-mode ITB. The definitions for those categories can be found elsewhere in this section.

Invalid credential means a Merchant Mariner Credential, merchant mariner's document, merchant mariner's license, STCW endorsement, or Certificate of Registry that has been suspended or revoked, or has expired.

Kilowatt or *kW* means 1⅓ horsepower. This term is used when describing a vessel's propulsion power and also when placing limitations on an engineer officer license or endorsement.

Large passenger vessel, for the purposes of subpart H of part 12, means a vessel of more than 70,000 gross tons, as measured under 46 U.S.C. 14302 and documented under the laws of the United States, with capacity for at least 2,000 passengers and a coastwise endorsement under 46 U.S.C. chapter 121.

Lifeboatman means a mariner who is qualified to take charge of, lower, and operate survival craft and related survival equipment on a vessel.

Lifeboatman-Limited means a mariner who is qualified to take charge of, lower, and operate liferafts, rescue boats, and other survival equipment on vessels where lifeboats are not installed.

Limited means an annotation on a merchant mariner credential which limits the operational authority of a particular endorsement to a limited tonnage, portions of a route, means of propulsion, or equipment (such as liferafts).

Liquefied gas or *LG* means a cargo that has a vapor pressure of 172 kPa (25 psia) or more at 37.8°C (100°F).

Liquid cargo in bulk means a liquid or liquefied gas listed in § 153.40 of this chapter and carried as a liquid cargo or liquid-cargo residue in integral, fixed, or portable tanks, except a liquid cargo carried in a portable tank actually loaded and discharged from a vessel with the contents intact.

Management level means the level of responsibility associated with serving as master, chief mate, chief engineer officer or second engineer officer onboard vessels to which STCW applies.

Marine chemist means a person certificated by the National Fire Protection Association.

Master means the officer having command of a vessel.

Mate means a qualified officer in the deck department other than the master.

Merchant Mariner Credential or *MMC* means a credential issued by the Coast Guard under 46 CFR part 10. It combines the individual merchant mariner's document, license, and certificate of registry enumerated in 46 U.S.C. subtitle II part E as well as the STCW endorsement into a single credential that serves as the mariner's qualification document, certificate of identification, and certificate of service.

MMC application means the application for the MMC, as well as the application for any endorsement on an MMC.

Mobile offshore drilling unit or *MODU* means a vessel capable of engaging in drilling operations for the exploration for or exploitation of subsea resources. MODU designs include the following:

(1) Bottom bearing units, which include:

(i) Self-elevating (or jack-up) units with moveable, bottom bearing legs capable of raising the hull above the surface of the sea; and

(ii) Submersible units of ship-shape, barge-type, or novel hull design, other than a self-elevating unit, intended for operating while bottom bearing.

(2) Surface units with a ship-shape or barge-type displacement hull of single or multiple hull construction intended for operating in a floating condition, including semi-submersibles and drill ships.

Month means 30 days, for the purpose of complying with the service requirements of this subchapter.

National Driver Register or *NDR* means the nationwide repository of information on drivers maintained by the National Highway Traffic Safety Administration under 49 U.S.C. chapter 303.

NDR-listed convictions means a conviction of any of the following motor vehicle-related offenses or comparable offenses:

(1) Operating a motor vehicle while under the influence of, or impaired by, alcohol or a controlled substance; or

(2) A traffic violation arising in connection with a fatal traffic accident, reckless driving, or racing on the highways.

Near-coastal means ocean waters not more than 200 miles offshore from the U.S. and its possessions, except for MMCs endorsed as Operator of Uninspected Passenger Vessel for which near-coastal is limited to waters not more than 100 miles offshore from the U.S. and its possessions.

Non-resident alien, for the purposes of subchapter H of part 12, means an individual who is not a citizen or alien lawfully admitted to the United States for permanent residence, but who is employable in the United States under the Immigration and Nationality Act (8 U.S.C. 1101 et seq.), including an alien crewman described in section 101(a)(15)(D)(i) of that Act who meets the requirements of 46 U.S.C. 8103(k)(3)(A).

Oceans means the waters seaward of the Boundary Lines as described in 46 CFR part 7. For the purposes of establishing sea service credit, the waters of the Inside Passage between Puget Sound and Cape Spencer, Alaska, and the inland waters of another country are not considered oceans.

Officer endorsement means an annotation on a merchant mariner credential that allows a mariner to serve in the capacities listed in § 10.109 of this part.

Officer in Charge, Marine Inspection or *OCMI* means, for the purposes of this subchapter, the commanding officer of the National Maritime Center, or any person designated as such by the Commandant, in accordance with 46 CFR 1.01–15(b).

Officer in charge of an engineering watch in a manned engine room or designated duty engineer in a periodically unmanned engine room or *OICEW* means an engineering officer qualified at the operational level.

Officer in charge of a navigational watch or *OICNW* means a deck officer qualified at the operational level.

Offshore installation manager or *OIM* means an officer restricted to service on MODUs. An assigned offshore installation manager is equivalent to a master on a conventional vessel and is the person designated by the owner or operator to be in complete and ultimate command of the unit.

On location means that a mobile offshore drilling unit is bottom bearing or moored with anchors placed in the drilling configuration.

Operate, operating, or operation (as applied to the manning requirements of vessels carrying passengers) refers to a vessel any time passengers are embarked whether the vessel is underway, at anchor, made fast to shore, or aground.

Operational level means the level of responsibility associated with serving as officer in charge of a navigational or engineering watch or as designated duty engineer for periodically unmanned machinery spaces or as Global Maritime Distress and Safety System radio operator onboard ships to which STCW applies.

Operator means an individual qualified to operate certain uninspected vessels.

Orally assisted examination means an examination as described in 46 CFR, part 11, subpart I of this subchapter administered verbally and documented by a Coast Guard examiner.

Overriding operational condition means circumstances in which essential shipboard work cannot be delayed due to safety or environmental reasons, or could not have reasonably been anticipated at the commencement of the voyage.

Participation, when used with regard to the service on transfers required for tankerman by §§ 13.120, 13.203, or 13.303 of this subchapter, means either actual participation in the transfers or close observation of how the transfers are conducted and supervised.

Passes a chemical test for dangerous drugs means that the result of a chemical test conducted according to 49 CFR part 40 is reported as ''negative'' by a Medical Review Officer according to that part.

Periodically unattended engine room means a space containing main propulsion and associated machinery and all sources of main electrical supply which is not at all times manned under all operating conditions, including maneuvering.

PIC means a person in charge.

Pilot of towing vessels means a qualified officer of a towing vessel operated only on inland routes.

Pilotage waters means the navigable waters of the United States, including all inland waters and offshore waters to a distance of 3 nautical miles from the baseline from which the Territorial Sea is measured.

Practical demonstration means the performance of an activity under the direct observation of a designated examiner or qualified assessor for the purpose of establishing that the performer is sufficiently proficient in a practical skill to meet a specified standard of competence or other objective criterion.

Propulsion power means the total maximum continuous-rated output power of the main propulsion machinery of a vessel determined by the manufacturer, in either kilowatts or horsepower, which appears on the ship's Certificate of Registry or other official document and excludes thrusters and other auxiliary machinery.

Public vessel means a vessel that:

(1) Is owned, or demise chartered, and operated by the United States Government or a government of a foreign country; and

(2) Is not engaged in commercial service.

Push-mode ITBs means those ITBs that involve a rigid coupling system and, when not coupled to the barge, are incapable of conducting towing in any other configuration (such as astern or alongside) because, by themselves, they have very limited seakeeping capability. The propelling unit moves as one with the barge unit.

Qualified Assessor or *QA* means a person who is qualified to evaluate whether an applicant has demonstrated the level of proficiency required to hold a required endorsement on an MMC. This person may be approved by the Coast Guard or by a Coast Guard-approved or -accepted program of training.

Qualified instructor means a person who has been trained or instructed in instructional techniques and is otherwise qualified to provide required training to candidates for an MMC endorsement. A faculty member employed at a State maritime academy or the U.S. Merchant Marine Academy operated under 46 CFR part 310 and instructing in a navigation or engineering course is qualified to serve as a qualified instructor in his or her area of specialization without individual evaluation by the Coast Guard.

Qualified rating means various categories of able seaman, qualified member of the engine department, or tankerman endorsements issued on merchant mariner credentials.

Quality Standard System or *QSS* means a set of policies, procedures, processes, and data required to establish and fulfill the organization's objectives.

Raise of grade means an increase in the level of authority and responsibility associated with an officer or rating endorsement.

Rating endorsement is an annotation on a merchant mariner credential that allows a mariner to serve in those capacities set out in § 10.109 of this part.

Regional examination center or *REC* means a field office of the National Maritime Center that receives and screens credential applications, conducts approved course oversight, and administers Coast Guard examinations as required by this subchapter.

Rest means a period of time during which the person concerned is off duty, is not performing work (which includes administrative tasks such as chart correction or preparation of port-entry documents), and is allowed to sleep without interruption.

Restricted means when a restriction is placed on an MMC, which restricts the authority of an endorsement to specific cargoes, equipment, vessel or vessels, employers, activities, particular geographic or local areas, formal camps, yacht clubs, educational institutions, or marinas.

Restricted tankerman endorsement means a valid tankerman endorsement on an MMC restricting its holder as the Coast Guard deems appropriate. For instance, the endorsement may restrict the holder to one or a combination of the following: a specific cargo or cargoes; a specific vessel or vessels; a specific facility or facilities; a specific employer or employers; a specific activity or activities (such as loading or unloading in a cargo transfer); or a particular area of water.

Rivers means a river, canal, or other similar body of water designated as such by the Coast Guard.

Safe and suitable person means a person whose prior record, including but not limited to criminal record and/or NDR record, provides no information indicating that his or her character and habits of life would support the belief that permitting such a person to serve under the MMC and/or endorsement sought would clearly be a threat to the safety of life or property detrimental to good discipline, or adverse to the interests of the United States. See 46 CFR 10.211 and 10.213 for the regulations associated with this definition.

Seagoing service means service onboard a ship/vessel relevant to the issue of a credential or other qualification.

Seagoing vessel means a self-propelled vessel that operates beyond the boundary line specified in 46 CFR part 7.

Second engineer officer means an engineer officer next in rank to the chief engineer officer and upon whom the responsibility for the mechanical

propulsion and the operation and maintenance of the mechanical and electrical installations of the ship will fall in the event of the incapacity of the chief engineer officer.

Self-propelled has the same meaning as the terms ''propelled by machinery'' and ''mechanically propelled.'' This term includes vessels fitted with sails or mechanical propulsion.

Self-propelled tank vessel means a tank vessel propelled by machinery other than a tankship.

Senior company official means the president, vice president, vice president for personnel, personnel director, or similarly titled or responsible individual, or a lower-level employee designated in writing by one of these individuals for the purpose of certifying employment.

Service (as used when computing the required service for endorsements) means the time period, in days, a person is assigned to work. On MODUs, this excludes time spent ashore as part of crew rotation.

Ship means a self-propelled vessel using any mode of propulsion, including sail and auxiliary sail.

Simulated transfer means a transfer practiced in a course meeting the requirements of § 13.121 of this subchapter that uses simulation supplying part of the service on transfers required for tankerman by §§ 13.203 or 13.303 of this subchapter.

Staff officer means a person who holds an MMC with an officer endorsement listed in § 10.109(a)(40) through (a)(47) of this part.

Standard of competence means the level of proficiency to be achieved for the proper performance of duties onboard vessels according to national and international criteria.

Steward's department means the department that includes entertainment personnel and all service personnel, including wait staff, housekeeping staff, and galley workers, as defined in the vessel security plan approved by the Secretary under 46 U.S.C. 70103(c). These personnel may also be referred to as members of the hotel department on a large passenger vessel.

STCW means the International Convention on Standards of Training, Certification and Watchkeeping for Seafarers, 1978, as amended (incorporated by reference, see § 10.103 of this subpart).

STCW Code means the Seafarer's Training, Certification and Watchkeeping Code (incorporated by reference, see § 10.103 of this subpart).

STCW endorsement means an annotation on an MMC that allows a mariner to serve in those capacities under § 10.109(d) of this subpart. The STCW endorsement serves as evidence that a mariner has met the requirements of the STCW Convention.

Support level means the level of responsibility associated with serving as able seafarer deck or engine, rating forming part of the navigational or engineering watch or as electro-technical rating.

Tank barge means a non-self-propelled tank vessel.

Tank vessel means a vessel that is constructed or adapted to carry, or that carries, oil or hazardous material in bulk as cargo or cargo residue, and that:

(1) Is a vessel of the United States;

(2) Operates on the navigable waters of the United States; or

(3) Transfers oil or hazardous material in a port or place subject to the jurisdiction of the United States.

Tankerman assistant means a person holding a valid ''Tankerman-Assistant'' endorsement on his or her MMC.

Tankerman engineer means a person holding a valid ''Tankerman-Engineer'' endorsement on his or her MMC.

Tankerman PIC means a person holding a valid ''Tankerman-PIC'' endorsement on his or her MMC.

Tankerman PIC (Barge) means a person holding a valid ''Tankerman-PIC (Barge)'' endorsement on his or her MMC.

Tankship means any self-propelled tank vessel constructed or adapted primarily to carry oil or hazardous material in bulk as cargo or as cargo residue.

Training program means a combination of training, practical assessment, and service which provides an individual with all or part of the necessary knowledge, understanding, and proficiency required for a specific qualification.

Transfer means any movement of fuel, dangerous liquid, or liquefied gas as cargo in bulk or as cargo residue to or from a vessel by means of pumping, gravitation, or displacement.

Transportation Worker Identification Credential or *TWIC* means an identification credential issued by the Transportation Security Administration under 49 CFR part 1572.

Underway means that a vessel is not at anchor, made fast to the shore, or aground. When referring to a mobile offshore drilling unit (MODU), underway means that the MODU is not in an on-location or laid-up status and includes that period of time when the MODU is deploying or recovering its mooring system.

Undocumented vessel means a vessel not required to have a certificate of documentation issued under the laws of the United States.

Utility towing means:

(1) Towing a barge with equipment performing marine construction, repair, and other types of marine utility services; or

(2) Assisting yachts and recreational boats with limited maneuverability to dock, undock, moor, or unmoor.

Vessel personnel with security duties means a person, excluding the designated security officer (e.g., Company Security Officer (CSO) and Vessel Security Officer (VSO)), holding a license or MMC officer endorsement, and/or an STCW endorsement; and persons in charge for the loading and unloading of cargo, passengers, and vessel stores.

Vessel Security Officer or *VSO* means a person onboard the vessel accountable to the Master, designated by the Company as responsible for security of the vessel, including implementation and maintenance of the Vessel's Security Plan, and for liaison with the Facility Security Officer and the vessel's Company Security Officer.

Western rivers means:

(1) The Mississippi River;

(2) The Mississippi River's tributaries, South Pass, and Southwest Pass, to the navigational demarcation lines dividing the high seas from harbors, rivers, and other inland waters of the United States;

(3) The Port Allen-Morgan City Alternate Route;

(4) That part of the Atchafalaya River above its junction with the Port Allen-Morgan City Alternate Route, including the Old River and the Red River; and

(5) Those waters specified in 33 CFR 89.25.

Year means 360 days for the purpose of complying with the service requirements of this subchapter.

7. Revise § 10.109 to read as follows:

§ 10.109 Classification of endorsements.

(a) *Domestic officer endorsements.* The following domestic officer endorsements are established in part 11 of this subchapter. The endorsements indicate that an individual holding a valid MMC with this endorsement is qualified to serve in that capacity and the endorsement has been issued under the requirements contained in part 11 of this subchapter:

(1) Master;

(2) Chief mate;

(3) Second mate;

(4) Third mate;

(5) Mate;

(6) Master of towing vessels;

(7) Master of towing vessels, limited;

(8) Master of towing vessels, utility;

(9) Mate (pilot) of towing vessels;

(10) Apprentice mate (Steersman);

(11) Apprentice mate (Steersman), limited;

(12) Apprentice mate (Steersman), utility;
(13) Master of towing vessels (Harbor Assist);
(14) Assistance towing;
(15) Offshore installation manager (OIM);
(16) Barge supervisor (BS);
(17) Ballast control operator (BCO);
(18) Operator of uninspected passenger vessels (OUPV);
(19) Master of uninspected fishing industry vessels;
(20) Mate of uninspected fishing industry vessels;
(21) Master of offshore supply vessels;
(22) Chief mate of offshore supply vessels;
(23) Mate of offshore supply vessels;
(24) Chief engineer;
(25) Chief engineer (limited-ocean);
(26) Chief engineer (limited-near-coastal);
(27) First assistant engineer;
(28) Second assistant engineer;
(29) Third assistant engineer;
(30) Assistant engineer (limited);
(31) Designated duty engineer (DDE);
(32) Chief engineer offshore supply vessel;
(33) Engineer offshore supply vessels;
(34) Chief engineer MODU;
(35) Assistant engineer MODU;
(36) Chief engineer uninspected fishing industry vessels;
(37) Assistant engineer uninspected fishing industry vessels;
(38) Radio officer;
(39) First-class pilot;
(40) Chief purser;
(41) Purser;
(42) Senior assistant purser;
(43) Junior assistant purser;
(44) Medical doctor;
(45) Professional nurse;
(46) Marine physician assistant;
(47) Hospital corpsman; and
(48) Radar observer.

(b) *Domestic rating endorsements*. The following domestic rating endorsements are established in part 12 of this subchapter. The endorsements indicate that an individual holding a valid MMC with this endorsement is qualified to serve in that capacity and the endorsement has been issued under the requirements contained in part 12 of this subchapter:
(1) Able seaman:
(i) Any waters, unlimited;
(ii) Limited;
(iii) Special;
(iv) Special (OSV);
(v) Sail; and
(vi) Fishing industry.
(2) Ordinary seaman;
(3) Qualified member of the engine department (QMED), including the following specialty endorsements:
(i) Oiler;
(ii) Watertender/Fireman;
(iii) Junior engineer;
(iv) Pumpman/Machinist; and
(v) Electrician/Refrigerating engineer.
(4) Lifeboatman;
(5) Lifeboatman-Limited;
(6) Wiper;
(7) Steward's department;
(8) Steward's department (F.H.);
(9) Cadet (deck or engineer);
(10) Student observer;
(11) Apprentice engineer; and
(12) Apprentice mate.

(c) The following ratings are established in part 13 of this subchapter. The endorsements indicate that an individual holding a valid MMC with this endorsement is qualified to serve in that capacity and the endorsement has been issued under the requirements contained in part 13 of this subchapter:
(1) Tankerman-PIC;
(2) Tankerman-PIC (Barge);
(3) Tankerman-PIC restricted;
(4) Tankerman-PIC (Barge) restricted;
(5) Tankerman assistant; and
(6) Tankerman engineer.

(d) *STCW endorsements*. The following STCW endorsements are issued according to the STCW Convention, the STCW Code, and parts 11, 12, and 13 of this subchapter. The endorsements indicate that an individual holding a valid MMC with this endorsement is qualified to serve in that capacity and the endorsement has been issued under the requirements contained in parts 11, 12, or 13 of this subchapter as well as the STCW Convention and STCW Code (incorporated by reference, see § 10.103 of this subpart):
(1) Master;
(2) Chief mate;
(3) Officer in charge of a navigational watch (OICNW);
(4) Chief engineer officer;
(5) Second engineer officer;
(6) Officer in charge of an engineering watch in a manned engineroom or designated duty engineer in a periodically unmanned engineroom (OICEW);
(7) Electro-technical officer (ETO);
(8) Rating forming part of a navigational watch (RFPNW);
(9) Able seafarer-deck;
(10) Rating forming part of a watch in a manned engineroom or designated to perform duties in a periodically unmanned engineroom (RFPEW);
(11) Able seafarer-engine;
(12) Electro-technical rating;
(13) Basic safety training (BST);
(14) Proficiency in survival craft and rescue boats other than fast rescue boats (PSC);
(15) Proficiency in survival craft and rescue boats other than fast rescue boats—limited (PSC—limited);
(16) Proficiency in fast rescue boats;
(17) Person in charge of medical care;
(18) Medical first-aid provider;
(19) GMDSS at-sea maintainer;
(20) GMDSS operator;
(21) Advanced oil tanker cargo operation;
(22) Advanced chemical tanker cargo operation;
(23) Advanced liquefied gas tanker cargo operation;
(24) Basic oil and chemical tanker cargo operation;
(25) Basic liquefied gas tanker cargo operation;
(26) Vessel Security Officer;
(27) Vessel personnel with designated security duties; and
(28) Security awareness.

§ 10.201 [Amended]

8. Amend § 10.201 as follows:
a. In paragraph (a), remove the words ''incorporated by reference in § 10.103'' and add, in their place, the words ''(incorporated by reference, see § 10.103 of this part)''; and
b. In paragraph (c), remove the words ''National Maritime Center or at any Regional Examination Center during usual business hours, or through the mail'' and add, in their place, the words ''Coast Guard''.

§ 10.203 [Amended]

9. In § 10.203(c) and (d), after the words ''when requested by an authorized official'', remove the words ''as identified in 33 CFR 101.515(d)''.
10. Amend § 10.205 as follows:
a. Revise paragraph (a) to read as set down below;
b. In paragraph (b), after the words ''All endorsements'', add the words '', unless otherwise noted,'';
c. In paragraph (c), remove the word ''one'' and add, in its place, the number ''1'' and remove the text ''§ 10.227(f) and add, in its place, the text ''§ 10.227(h)'';
d. In paragraph (d), after the words ''in accordance with § 10.227'', add the words ''of this part'';
e. Remove paragraph (f), and redesignate paragraphs (g) and (h) as paragraphs (f) and (g), respectively; and
f. Add new paragraph (h) to read as follows:

§ 10.205 Validity of a merchant mariner credential.

(a) An MMC is valid for a term of 5 years from the date of issuance. Upon the written request of the applicant, the Coast Guard may post-date the issuance of an MMC up to 12 months from the date that the Coast Guard accepts a complete application as defined in this part.

* * * * *

(h) When a Document of Continuity is replaced with an MMC re-issued in accordance with § 10.227 of this part, the Document of Continuity that has been replaced becomes invalid. In the event that not all endorsements on a Document of Continuity are activated, a new Document of Continuity will be issued for the remaining endorsements.

§ 10.207 [Amended]

11. In § 10.207, after the words ''a unique serial number'', add the words '', called the mariner reference number,''.

12. Revise § 10.209 to read as follows:

§ 10.209 General application procedures.

(a) The applicant for an MMC, whether for an original, renewal, duplicate, raise of grade, or a new endorsement on a previously issued MMC, must establish that he or she satisfies all the requirements for the MMC and endorsements sought before the Coast Guard will issue the MMC. This section contains the general requirements for all applicants. Additional requirements for duplicates, renewals, new endorsements, and raises of grade appear later in this part.

(b) The Coast Guard may refuse to process an incomplete MMC application. The requirements for a complete application for an original MMC are contained in § 10.225 of this part, the requirements for a renewal MMC application are contained in § 10.227 of this part, the requirements for a duplicate MMC application are contained in § 10.229 of this part, and the requirements for an application for a new endorsement or raise of grade are contained in § 10.231 of this part.

(c) Applications are valid for 12 months from the date that the Coast Guard approves the application.

(d) The portions of the application that may be submitted in person, by mail, fax, or other electronic means may include:

(1) The application, consent for National Driver Register (NDR) check, and notarized oath on Coast Guard-furnished forms, and the evaluation fee required by § 10.219 of this part;

(2) The applicant's continuous discharge book, certificate of identification, MMD, MMC, license, STCW endorsement, Certificate of Registry (COR), or, if it has not expired, a photocopy of the credential, including the back and all attachments;

(3) Proof, documented on CG–719K or CG–719K/E, as appropriate, provided by the Coast Guard, that the applicant passed the applicable vision, hearing, medical or physical exam as required by subpart C of this part, or an unexpired medical certificate/endorsement issued by the Coast Guard;

(4) If the applicant desires a credential with a radar-observer endorsement in accordance with § 11.480 of this subchapter, either the radar-observer certificate or a certified copy;

(5) Evidence of, or acceptable substitute for, sea service, if required;

(6) For an endorsement as a medical doctor or professional nurse as required in § 11.807 of this subchapter, evidence that the applicant holds a currently valid, appropriate license as physician, surgeon, or registered nurse, issued under the authority of a state or territory of the United States, the Commonwealth of Puerto Rico, or the District of Columbia. Any MMC issued will retain any limitation associated with the medical license;

(7) Any certificates or other supplementary materials required to show that the mariner meets the mandatory requirements for the specific endorsement sought, as established in parts 11, 12, or 13 of this subchapter; and

(8) An open-book exercise, in accordance with § 10.227(e)(1) of this part.

(e) The following requirements must be satisfied before an original or renewal MMC, or new endorsement or a raise of grade added to a previously issued MMC, will be issued. These materials will be added to the individual's record by the Coast Guard:

(1) *Determination of safety and suitability.* No MMC will be issued as an original or reissued with a new expiration date, and no new officer endorsement will be issued if the applicant fails the criminal record review as set forth in § 10.211 of this part;

(2) *NDR review.* No MMC will be issued as an original or reissued with a new expiration date, and no new officer endorsement will be issued if the applicant fails the NDR review as set forth in § 10.213 of this part; and

(3) *Information supplied by the Transportation Security Administration (TSA).* No MMC or endorsement will be issued until the Coast Guard receives the following information from the applicant's TWIC application: the applicant's fingerprints, FBI number and criminal record (if applicable), photograph, proof of citizenship, or Nationality with proof of legal resident status (if applicable). If the information is not available from TSA, the mariner may be required to visit a Regional Exam Center to provide this information.

(f) Upon determining that the applicant satisfactorily meets all requirements for an MMC or an endorsement thereon, the Coast Guard will issue the properly endorsed MMC to the applicant. The Coast Guard will not issue an MMC until it has received proof that the mariner holds a valid TWIC.

(g) When a new MMC is issued, the mariner must return the previously issued MMC, license, MMD, COR, or STCW endorsement to the Coast Guard, unless the new MMC is being issued to replace a lost or stolen credential.

(h) No MMC will be issued if the applicant fails a chemical test for dangerous drugs as required in §§ 10.225(b)(5), 10.227(d)(5), and 10.231(c)(6).

(i) *Ceremonial licenses.* A mariner may obtain a ceremonial license when applying for his or her credential or Document of Continuity.

13. Amend § 10.211 as follows:

a. In paragraph (a), after the words ''written disclosure of all'', add the word ''prior'';

b. In paragraph (b), after the words ''a duplicate MMC under § 10.229'', add the words ''of this part'';

c. In paragraph (c), remove the words ''Beginning April 15, 2009, the'' and add, in their place, the word ''The''; and after the words ''This information'', remove the words '', or the fingerprints taken by the Coast Guard at an REC,'';

d. In paragraph (d), remove the word ''disapproved'' and add, in its place, the word ''denied'';

e. In paragraph (e), remove the word ''disapproved'' and add, in its place, the word ''denied''; and remove the word ''disapproval'' and add, in its place, the word ''denial'';

f. In paragraph (g), after the words ''The Coast Guard will use table 10.211(g)'', add the words ''of this section'';

g. Revise table 10.211(g) to read as set down below;

h. In paragraphs (h) and (i), after the words ''table 10.211(g)'' wherever they appear, add the words ''of this section'';

i. In paragraph (j), after the words ''If a person with a criminal conviction submits'', remove the word ''their'' and add, in its place, the words ''his or her''; and remove the word ''disapprove'' in the last sentence, and add, in its place, the word ''deny''; and

j. In paragraph (k), after the words ''If a person with a criminal conviction submits'', remove the word ''their'' and add, in its place, the words ''his or her'', and after the words ''in table 10.211(g)'' wherever they appear, add the words ''of this section''.

§ 10.211 Criminal Record Review.

* * * * *

TABLE 10.211(g)—GUIDELINES FOR EVALUATING APPLICANTS FOR MMCS WHO HAVE CRIMINAL CONVICTIONS

Crime [1]	Assessment periods	
	Minimum	Maximum
Assessment Periods for Officer and Rating Endorsement		
Crimes Against Persons:		
Homicide (intentional)	7 years	20 years.
Homicide (unintentional)	5 years	10 years.
Assault (aggravated)	5 years	10 years.
Assault (simple)	1 year	5 years.
Sexual Assault (rape, child molestation)	5 years	10 years.
Robbery	5 years	10 years.
Other crimes against persons.[2]		
Vehicular Crimes:		
Conviction involving fatality	1 year	5 years.
Reckless Driving	1 year	2 years.
Racing on the Highways	1 year	2 years.
Other vehicular crimes [2]		
Crimes Against Public Safety:		
Destruction of Property	5 years	10 years.
Other crimes against public safety [2]		
Dangerous Drug Offenses: [3 4 5]		
Trafficking (sale, distribution, transfer)	5 years	10 years.
Dangerous drugs (Use or possession)	1 year	10 years.
Other dangerous drug convictions.[6]		
Criminal Violations of Environmental Laws:		
Criminal violations of environmental laws involving improper handling of pollutants or hazardous materials	1 year	10 years.
Assessment Periods for Officer Endorsements Only		
Crimes Against Property:		
Burglary	3 years	10 years.
Larceny (embezzlement)	3 years	5 years.
Other crimes against property.[2]		

[1] Conviction of attempts, solicitations, aiding and abetting, accessory after the fact, and conspiracies to commit the criminal conduct listed in this table carry the same minimum and maximum assessment periods provided in the table.

[2] Other crimes will be reviewed by the Coast Guard to determine the minimum and maximum assessment periods depending on the nature of the crime.

[3] Applicable to original applications only. Any applicant who has ever been the user of, or addicted to the use of, a dangerous drug must meet the requirements of paragraph (f) of this section. Note: Applicants for reissue of an MMC with a new expiration date including a renewal or additional endorsement(s), who have been convicted of a dangerous drug offense while holding a license, MMC, MMD, STCW endorsement or COR, may have their application withheld until appropriate action has been completed by the Coast Guard under the regulations which appear in 46 CFR part 5 governing the administrative actions against merchant mariner credentials.

[4] The Coast Guard may consider dangerous drug convictions more than 10 years old only if there has been another dangerous drug conviction within the past 10 years.

[5] Applicants must demonstrate rehabilitation under paragraph (l) of this section, including applicants with dangerous drug use convictions more than 10 years old.

[6] Other dangerous drug convictions will be reviewed by the Coast Guard on a case by case basis to determine the appropriate assessment period depending on the nature of the offense.

* * * * *

14. Revise § 10.213 to read as follows:

§ 10.213 National Driver Register.

(a) No MMC will be issued as an original or reissued with a new expiration date, and no new officer endorsement will be issued, unless the applicant consents to a check of the NDR for offenses described in section 205(a)(3)(A) or (B) of the NDR Act (i.e., operation of a motor vehicle while under the influence of, or impaired by, alcohol or a controlled substance; and any traffic violations arising in connection with a fatal traffic accident, reckless driving, or racing on the highways).

(b) The Coast Guard will not consider NDR-listed civil convictions that are more than 3 years old from the date of request unless that information relates to a current suspension or revocation of the applicant's license to operate a motor vehicle. The Coast Guard may determine minimum and maximum assessment periods for NDR-listed criminal convictions using table 10.213(c) of this section. An applicant conducting simultaneous MMC transactions is subject to only one NDR check.

(c) The guidelines in table 10.213(c) will be used by the Coast Guard in evaluating applicants who have drug or alcohol related NDR-listed convictions. Non-drug or alcohol related NDR-listed convictions will be evaluated by the Coast Guard under table 10.211(g) of § 10.211 of this part as applicable. The Coast Guard may consider non-drug or alcohol related NDR-listed convictions that are more than 3 years old from the date of the request when the information relates to a current suspension or revocation of the applicant's license to operate a motor vehicle.

TABLE 10.213(c)—GUIDELINES FOR EVALUATING APPLICANTS FOR MMCS WHO HAVE NDR MOTOR VEHICLE CONVICTIONS INVOLVING DANGEROUS DRUGS OR ALCOHOL [1]

Number of convictions	Date of conviction	Assessment period
1	Less than 1 year	1 year from date of conviction.
1	More than 1, less than 3 years	Application will be processed, unless suspension, or revocation [2] is still in effect. Applicant will be advised that additional conviction(s) may jeopardize merchant mariner credentials.
1	More than 3 years old	Application will be processed.
2 or more	Any less than 3 years old	1 year since last conviction and at least 3 years from 2nd most recent conviction, unless suspension or revocation is still in effect.
2 or more	All more than 3 years old	Application will be processed unless suspension or revocation is still in effect.

[1] Any applicant who has ever been the user of, or addicted to the use of, a dangerous drug must meet the requirements of paragraph (f) of this section.

[2] Suspension or revocation, when referred to in table 10.213, means a State suspension or revocation of a motor vehicle operator's license.

(d) Any application may be denied if information from the NDR check leads the Coast Guard to determine that the applicant cannot be entrusted with the duties and responsibilities of the endorsement for which the application is made. If an application is denied, the Coast Guard will notify the applicant in writing of the reason(s) for denial and advise the applicant that the appeal procedures in subpart 1.03 of part 1 of this chapter apply. No examination will be given pending decision on appeal.

(e) Before denying an application because of information received from the NDR, the Coast Guard will make the information available to the applicant for review and written comment. The applicant may submit records from the applicable State concerning driving record and convictions to the Coast Guard Regional Examination Center (REC) processing the application. The REC will hold an application with NDR-listed convictions pending the completion of the evaluation and delivery by the individual of the underlying State records.

(f) If an applicant has one or more alcohol or dangerous drug-related criminal or NDR-listed convictions, if the applicant has ever been the user of, or addicted to the use of, a dangerous drug, or if the applicant applies before the minimum assessment period for his or her conviction has elapsed, the Coast Guard may consider the following factors, as applicable, in assessing the applicant's suitability to hold an MMC. This list is intended as a guide for the Coast Guard. The Coast Guard may consider other factors which it judges appropriate to a particular applicant, such as:

(1) Proof of completion of an accredited alcohol or drug abuse rehabilitation program;

(2) Active membership in a rehabilitation or counseling group, such as Alcoholics Anonymous or Narcotics Anonymous;

(3) Character references from persons who can attest to the applicant's sobriety, reliability, and suitability for employment in the merchant marine, including parole or probation officers;

(4) Steady employment; and

(5) Successful completion of all conditions of parole or probation.

§ 10.214 [Amended]

15. In § 10.214, remove the words ''Until April 15, 2009, the'' and add, in their place, the word ''The''.

§ 10.215 [Removed]

16. Remove § 10.215

17. Revise § 10.217 to read as follows:

§ 10.217 Merchant mariner credential application and examination locations.

(a) Applicants for an MMC may apply to any of the Regional Examination Centers (RECs) or any other location designated by the Coast Guard. Applicants may contact the National Maritime Center at 100 Forbes Drive, Martinsburg, WV 25404, by telephone 1–888–427–5662 or 304–433–3400, or by e-mail at *IASKNMC@uscg.mil.* A list of locations approved for application submittal is available through the Coast Guard Web site at *http://www.uscg.mil/nmc.*

(b) *Exam Locations.* (1) Coast Guard units abroad may conduct exams for ratings at locations other than the RECs, but are not prepared to conduct practical examinations.

(2) The Coast Guard may designate additional exam facilities/locations to provide services to applicants for MMCs.

18. Revise § 10.219 to read as follows:

§ 10.219 Fees.

(a) Use table 10.219(a) of this section to calculate the mandatory fees for MMCs and associated endorsements.

TABLE 10.219(a)—FEES

If you apply for	And you need		
	Evaluation then the fee is . . .	Examination then the fee is . . .	Issuance then the fee is . . .
MMC with officer endorsement:			
Original:			
Unlimited [1]	$100	$110	$45
Limited [2]	$100	$95	$45
Renewal	$50	$45	$45
Raise of grade	$100	$45	$45
Modification or removal of limitation or scope	$50	$45	$45
Radio officer endorsement:			
Original	$50	$45	$45
Renewal	$50	n/a	$45
Staff officer endorsements:			
Original	$90	n/a	$45

TABLE 10.219(a)—FEES—Continued

If you apply for	And you need		
	Evaluation then the fee is . . .	Examination then the fee is . . .	Issuance then the fee is . . .
Renewal	$50	n/a	$45
MMC with rating endorsement:			
Original endorsement for ratings other than qualified ratings	$95	n/a	$45
Original endorsement for qualified rating	$95	$140	$45
Upgrade or raise of Grade	$95	$140	$45
Renewal endorsement for ratings other than qualified ratings	$50	n/a	$45
Renewal endorsement for qualified rating	$50	$45	$45
Modification or removal of limitation or scope	$50	$45	$45
STCW endorsement:			
Original	No fee	No fee	No fee
Renewal	No fee	No fee	No fee
Reissue, replacement, and duplicate	n/a	n/a	$45 [3]

[1] Unlimited means credentials authorizing service on vessels of any gross tons/unlimited tonnage or unlimited propulsion power.
[2] Limited means credentials authorizing service on vessels of less than 1,600 GRT/3,000 GT.
[3] Duplicate for MMC lost as result of marine casualty—No Fee.

(b) *Fee payment procedures.* Applicants may pay:

(1) All fees required by this section at the time the application is submitted; or

(2) A fee for each phase at the following times:

(i) An evaluation fee when the application is submitted.

(ii) An examination fee before the first examination section is taken.

(iii) An issuance fee before receipt of the MMC.

(c) If the examination is administered at a place other than a Regional Examination Center (REC), the examination fee must be paid to the REC at least one week before the scheduled examination date.

(d) Fee payments must be for the exact amount and made by credit card or by electronic payment in a manner specified by the Coast Guard. For information regarding current forms of electronic payment, go to *http://www.uscg.mil/stcw/ldcr-userfees.htm.*

(e) Unless otherwise specified in this part, when two or more endorsements are processed on the same application, the fees will be as follows:

(1) *Evaluation fees.* If an applicant simultaneously applies for a rating endorsement and a deck or engineer officer's endorsement, only the evaluation fee for the officer's endorsement will be charged. If an applicant simultaneously applies for a staff officer or radio officer endorsement along with the deck or engineer officer endorsement, only the evaluation fee for the deck or engineer officer's endorsement will be charged. No evaluation fee is charged for an STCW endorsement.

(2) *Examination fees.* One examination fee will be charged for each exam or series of exams for an original, raise of grade, or renewal of an endorsement on an MMC taken within 1 year from the date of the application approval. An examination fee will also be charged to process an open-book exercise used to renew an MMC. If an officer endorsement examination under part 11 of this chapter also fulfills the examination requirements in part 12 of this chapter for rating endorsements, only the fee for the officer endorsement examination is charged.

(3) *Issuance fees.* Only one issuance fee will be charged for each MMC issued, regardless of the number of endorsements placed on the credential. There is no fee for a Document of Continuity.

(f) The Coast Guard may assess additional charges to anyone to recover collection and enforcement costs associated with delinquent payments or failure to pay a fee. The Coast Guard will not provide credentialing services to a mariner who owes money for credentialing services previously provided.

(g) Anyone who fails to pay a fee or charge established under this section is liable to the United States Government for a civil penalty of not more than $6,500 for each violation.

(h) *No-fee MMC for certain applicants.* For the purpose of this section, a no-fee MMC applicant is a person who is a volunteer, or a part-time or full-time employee of an organization that is:

(1) Charitable in nature;

(2) Not for profit; and

(3) Youth-oriented.

(i) *Determination of eligibility.* (1) An organization may submit a written request to U.S. Coast Guard National Maritime Center, 100 Forbes Drive, Martinsburg, WV 25404, in order to be considered an eligible organization under the criteria set forth in paragraph (h)(1) of this section. With the written request, the organization must provide evidence of its status as a youth-oriented, not-for-profit, charitable organization.

(2) The following organizations are accepted by the Coast Guard as meeting the requirements of paragraph (h)(1) of this section and need not submit evidence of their status: Boy Scouts of America, Sea Explorer Association, Girl Scouts of the United States of America, and Young Men's Christian Association of the United States of America.

(j) A letter from an organization determined eligible under paragraph (h)(2) of this section must also accompany the person's MMC application to the Coast Guard. The letter must state that the purpose of the person's application is solely to further the conduct of the organization's maritime activities. The applicant will then be eligible under this section to obtain a no-fee MMC if other requirements for the MMC are met.

(k) An MMC issued to a person under this section will be endorsed restricting its use to vessels owned or operated by the sponsoring organization.

(l) The holder of a no-fee MMC issued under this section may have the restriction removed by paying the appropriate evaluation, examination, and issuance fees that would have otherwise applied.

19. Amend § 10.221 as follows:

a. In paragraph (a)(1), remove the word ''part'' and add, in its place, the word ''subchapter'';

b. In paragraph (a)(2), remove the section number ''§ 12.40–11'' and add, in its place, the section number ''§ 12.809''; and

c. Revise paragraph (b) to read as follows:

§ 10.221 Citizenship.

* * * * *

(b) Proof of citizenship or alien status must be submitted to the Transportation Security Administration (TSA) with the applicant's TWIC application in accordance with 49 CFR 1572.17(a)(11). If appropriate proof of citizenship or alien status is not submitted to TSA when applying for a TWIC, applicants may be required to appear at an REC to provide proof of citizenship.

* * * * *

20. Amend § 10.223 as follows:

a. In paragraph (c)(2), remove the words ''Beginning April 15, 2009, proof'' and add, in their place, the word ''Proof'';

b. In paragraphs (c)(3)(i), (c)(3)(ii), and (c)(3)(iii), remove the word ''chapter'' and add, in its place, the word ''subchapter''; and

c. Revise paragraph (c)(3)(iv) to read as set down below.

§ 10.223 Modification or removal of limitations or scope.

* * * * *

(c) * * *

(3) * * *

(iv) The mandatory requirements for STCW endorsements are contained in parts 11, 12, and 13 of this subchapter.

* * * * *

21. Revise § 10.225 to read as follows:

§ 10.225 Requirements for original merchant mariner credentials.

(a) An applicant must apply as an original if the MMC sought is:

(1) The first credential issued to the applicant;

(2) The first credential issued to applicants after their previous credential has expired and they do not hold a Document of Continuity under § 10.227(g) of this part or an equivalent unexpired continuity endorsement on their license or MMD; or

(3) The first credential issued to applicants after their previous credential was revoked pursuant to § 10.235 of this part.

(b) A complete application for an original MMC must contain the following:

(1) A completed, signed application;

(2) Proof that the mariner either holds a valid TWIC or has applied for a TWIC;

(3) All supplementary materials required to show that the mariner meets the mandatory requirements for all endorsements sought as follows:

(i) The mandatory requirements for officer endorsements are contained in part 11 of this subchapter;

(ii) The mandatory requirements for rating endorsements are contained in part 12 of this subchapter;

(iii) The mandatory requirements for tanker rating endorsements are contained in part 13 of this subchapter; and/or

(iv) The mandatory requirements for STCW endorsements are contained in parts 11, 12, and 13 of this subchapter.

(4) The appropriate fee as set forth in § 10.219 of this part;

(5) Evidence of having passed a chemical test for dangerous drugs or of qualifying for an exemption from testing in § 16.220 of this subchapter;

(6) Where sea service is required, documentary evidence in accordance with § 10.232 of this part;

(7) Proof, documented on CG–719–K or CG–719–K/E, as appropriate, that the applicant passed all applicable vision, hearing, medical, and/or physical exams as required by subpart C of this part or a valid medical certificate/endorsement issued by the Coast Guard;

(8) Consent to a Coast Guard check of the NDR for offenses described in section 205(a)(3)(A) or (B) of the National Driver Register Act of 1982, as amended; and

(9) The oath as required in paragraph (c) of this section.

(c) *Oath.* Every person who receives an original MMC must first take an oath, before an official authorized to give such an oath, that he or she will faithfully and honestly, according to his or her best skill and judgment, without concealment or reservation, perform all the duties required by law and obey all lawful orders of superior officers. An oath may be administered by any Coast Guard-designated individual or any person legally permitted to administer oaths in the jurisdiction where the person taking the oath resides. An oath administered at a location other than the Coast Guard must be verified in writing by the administering official and submitted to the same Regional Examination Center (REC) where the applicant applied for his or her MMC. This oath remains binding for any subsequently issued MMC and endorsements added to the MMC, unless specifically renounced in writing.

22. Revise § 10.227 to read as follows:

§ 10.227 Requirements for renewal.

(a) Except as provided in paragraph (g) of this section, an applicant for renewal of a credential must establish possession of all of the necessary qualifications before the MMC will be renewed.

(b) A credential may be renewed at any time during its validity and for 1 year after expiration.

(c) No credential will be renewed if it has been suspended without probation or revoked as a result of action under part 5 of this chapter or if facts that would render a renewal improper have come to the attention of the Coast Guard.

(d) Except as provided in paragraph (g) of this section, a complete application for renewal must contain the following:

(1) A completed, signed application;

(2) Proof that the mariner holds a valid TWIC;

(3) The appropriate fee as set forth in § 10.219 of this part;

(4) Any uncanceled MMD, MMC, license, STCW endorsement, Certificate of Registry (COR), or Document of Continuity held by the applicant. If one or more of these credentials are still valid at the time of application, a photocopy—front, back, and all attachments—will satisfy this requirement;

(5) Evidence of having passed a chemical test for dangerous drugs or of qualifying for an exemption from testing in § 16.220 of this subchapter;

(6) Proof, documented on CG–719K or CG–719K/E, as appropriate, that the applicant passed all applicable vision, hearing, medical, and/or physical exams as required by subpart C of this part or a valid medical certificate/endorsement issued by the Coast Guard; and

(7) Consent to a Coast Guard check of the NDR for offenses described in section 205(a)(3)(A) or (B) of the National Driver Register Act of 1982, as amended.

(e) Except as provided in paragraph (e)(8) of this section and 46 CFR 13.120, the applicant must meet the following professional requirements for renewal:

(1) The applicant must either—

(i) Present evidence of at least 1 year of sea service during the past 5 years;

(ii) Pass a comprehensive, open-book exercise covering the general subject matter contained in appropriate sections of subpart I of this part;

(iii) Complete an approved refresher training course; or

(iv) Present evidence of employment in a position closely related to the operation, construction, or repair of vessels (either deck or engineer as appropriate) for at least 3 years during the past 5 years. An applicant for a deck license or officer endorsement with this type of employment must also demonstrate knowledge on an applicable Rules of the Road open-book exercise.

(2) The qualification requirements for renewal of radar observer endorsement are in § 11.480 of this subchapter.

(3) Additional qualification requirements for renewal of an officer endorsement as first-class pilot are contained in § 11.713 of this subchapter.

(4) An applicant for renewal of a radio officer's endorsement must, in addition to meeting the requirements of this section, present a copy of a currently valid license as first- or second-class radiotelegraph operator issued by the Federal Communications Commission.

(5) An applicant for renewal of an endorsement as medical doctor or professional nurse must, in addition to meeting the requirements of this section, present evidence that he or she holds a currently valid, appropriate license as physician, surgeon, or registered nurse issued under the authority of a State or territory of the United States, the Commonwealth of Puerto Rico, or the District of Columbia. Any such renewal will retain the limitations placed upon the medical license by the issuing body. There are no professional requirements for renewal of an endorsement as marine physician assistant or hospital corpsman.

(6) An applicant for renewal of an endorsement as master or mate (pilot) of towing vessels, in addition to the other requirements in this paragraph, must also submit satisfactory evidence of:

(i) Having completed a practical demonstration of maneuvering and handling a towing vessel to the satisfaction of a designated examiner; or

(ii) Ongoing participation in training and drills during the validity of the license or MMC being renewed.

(7) An applicant seeking to renew a tankerman endorsement must meet the additional requirements listed in § 13.120 of this subchapter.

(8) There are no professional requirements for renewal for the following endorsements:

(i) Staff officers (all types);

(ii) Ordinary seaman;

(iii) Wiper;

(iv) Steward's department;

(v) Steward's department (F.H.);

(vi) Cadet;

(vii) Student observer;

(viii) Apprentice engineer;

(ix) Apprentice mate (issued under part 12 of this subchapter);

(x) Person in charge of medical care;

(xi) Medical first-aid provider;

(xii) GMDSS at-sea maintainer; and

(xiii) GMDSS operator.

(f) Except as otherwise provided, each candidate for a renewal of an STCW endorsement must meet the applicable requirements of part 11, subpart C, and/or part 12, subpart F.

(g) *Document of Continuity.* (1) Applicants for renewal of domestic endorsements, who are unwilling or otherwise unable to meet the requirements of paragraph (d) of this section, including but not limited to the medical and physical standards of subpart C of this part, suitability standards of § 10.211 of this part, drug tests, professional requirements, and TWIC, may apply for a Document of Continuity issued by the Coast Guard. Documents of Continuity do not expire and are issued solely to maintain an individual's eligibility for renewal. A Document of Continuity does not entitle an individual to serve as a merchant mariner. A holder of a Document of Continuity may obtain a properly endorsed, valid MMC at any time by satisfying the requirements for renewal as provided in paragraph (d) of this section. When a valid MMC is issued to replace a previously held Document of Continuity, the previously issued Document of Continuity becomes void.

(2) Applications for a Document of Continuity must include:

(i) The endorsements to be placed into continuity; and

(ii) An application, including a signed statement from the applicant, attesting to an awareness of the limited purpose of the Document of Continuity, his or her inability to serve, and the requirements to obtain an MMC.

(3) If not all MMC endorsements are to be converted into a Document of Continuity, a new MMC will be issued with the active endorsements. Once the new MMC and/or Document of Continuity is issued the previous MMC is no longer valid and must be returned to the Coast Guard.

(4) STCW endorsements may not be placed in continuity. If an individual continues to maintain a valid MMC while placing specific domestic endorsements into continuity, those STCW endorsements associated with the domestic endorsements that were placed in continuity are no longer valid. A holder of a Document of Continuity may obtain a properly endorsed, valid MMC, including STCW endorsements, at any time by satisfying the requirements for renewal as provided in paragraph (d) of this section.

(5) No credential expired beyond the 12-month administrative grace period in paragraph (h) of this section can be converted into a Document of Continuity.

(h) *Administrative grace period.* Except as provided herein, a credential may not be renewed more than 12 months after it has expired. For a credential to be re-issued by the Coast Guard more than 12 months after its expiration, an applicant must comply with the requirements of paragraph (i) of this section. When an applicant's credential expires during a time of service with the Armed Forces and there is no reasonable opportunity for renewal, including by mail, this period may be extended. The period of military service following the date of expiration which precluded renewal may be added to the 12-month grace period. The 12-month grace period and any extensions do not affect the expiration date of the credential. A license, MMD, COR, STCW endorsement, MMC, and any endorsements thereon, are not valid for use after the expiration date.

(i) *Re-issuance of expired credentials.* (1) If an applicant applies for re-issuance of an endorsement as deck officer, engineer officer, or qualified rating more than 12 months after its expiration, instead of the requirements of paragraph (e) of this section, the applicant must demonstrate continued professional knowledge by completing a course approved for this purpose, or by passing the complete examination for original issue of the endorsement. The examination may be oral-assisted if the expired credential was awarded based on the results of an oral exam. The fees set forth in § 10.219 of this part apply to these examinations. In the case of an expired radio officer's endorsement, the endorsement may be issued upon presentation of a valid first- or second-class radiotelegraph operator license issued by the Federal Communications Commission.

(2) An endorsement for chief purser, purser, senior assistant purser, junior assistant purser, hospital corpsman, marine physician assistant, medical doctor, or professional nurse that has been expired for more than 12 months must be renewed in the same way as a current endorsement of that type. There are no additional requirements for re-issuing endorsements for chief purser, purser, senior assistant purser, junior assistant purser, hospital corpsman, marine physician assistant, medical doctor, or professional nurse that have been expired for more than 12 months.

(3) Applicants applying for re-issuance of an endorsement as master or mate (pilot) of towing vessels more than 12 months after expiration of the previous endorsement must complete the practical demonstration of maneuvering and handling a towing vessel required under (e)(6)(i) of this section.

(4) Applicants applying for re-issuance of an endorsement as any tankerman rating more than 12 months after expiration of the previous endorsement must meet the requirements in § 13.117 of this subchapter.

23. Amend § 10.229 as follows:

a. Revise the section heading to read as set down below;

b. Revise paragraph (a) to read as set down below;

c. In paragraph (b), in the first sentence, after the words ''The duplicate'', add the word ''credential'' and remove the second sentence;

d. In paragraph (c), after the words ''a duplicate'', add the word ''credential''; and

e. In paragraph (d), after the words ''the appropriate fees set out in § 10.219'', add the words ''of this part''.

§ 10.229 Replacement of lost merchant mariner credentials.

(a) A mariner may be issued a duplicate credential upon request, and without examination, after submitting an application with an affidavit describing the circumstances of the loss. The Coast Guard will only issue the duplicate credential, MMC and/or medical certificate/endorsement, after confirming the validity of the mariner's credential and the validity of the mariner's TWIC.

* * * * *

24. Revise § 10.231 to read as follows:

§ 10.231 Requirements for raises of grade or new endorsements.

(a) This section applies to applicants who already hold a valid credential and want to make the following transactions:

(1) Add a new endorsement; or

(2) Raise of grade of an existing endorsement.

(b) New endorsements or raises of grade of existing endorsements on an MMC under this section will not change the expiration date of the MMC unless the applicant renews all endorsements that appear on the MMC under § 10.227 of this part.

(c) A complete application for a new endorsement or raise of grade must contain the following:

(1) A completed, signed application;

(2) Proof that the mariner holds or has applied for a valid TWIC;

(3) All supplementary materials required to show that the mariner meets the mandatory requirements for the new endorsements sought as follows:

(i) The mandatory requirements for officer endorsements are contained in part 11 of this subchapter and paragraph (d) of this section;

(ii) The mandatory requirements for rating endorsements are contained in part 12 of this subchapter;

(iii) The mandatory requirements for tankerman rating endorsements are contained in part 13 of this subchapter; and/or

(iv) The mandatory requirements for STCW endorsements are contained in parts 11, 12, and 13 of this subchapter.

(4) The appropriate fee as set forth in § 10.219 of this part;

(5) Any uncanceled MMD, MMC, license, STCW endorsement, or COR held by the applicant. If one or more of these credentials are still valid at the time of application, a photocopy—front, back, and all attachments—will satisfy this requirement;

(6) Applicants for the following endorsements must produce evidence of having passed a chemical test for dangerous drugs or of qualifying for an exemption from testing in § 16.220 of this subchapter:

(i) Any officer endorsement; and

(ii) The first endorsement as able seaman, lifeboatman, lifeboatman-limited, qualified member of the engine department, or tankerman.

(7) Where sea service is required, documentary evidence in accordance with § 10.232 of this part;

(8) Proof, documented on CG–719–K or CG–719–K/E, as appropriate, that the applicant passed all applicable vision, hearing, medical, and/or physical exams as required by subpart C of this part or a valid medical certificate/endorsement issued by the Coast Guard; and

(9) Consent to a Coast Guard check for offenses described in section 205(a)(3)(A) or (B) of the National Driver Register Act of 1982, as amended.

(d) Additional requirements for an applicant seeking a raise of grade of an officer endorsement:

(1) Sea service acquired before the issuance of an officer endorsement is generally not accepted as any part of the service required for a raise of grade of that endorsement. However, service acquired before issuance of an officer endorsement will be accepted for certain crossovers, endorsements, or increases in scope of an MMC, as appropriate. In the limited tonnage categories for deck officers, total accumulated service is a necessary criterion for most raises of grade; therefore service acquired before the issuance of such officer endorsements will be accepted.

(2) An applicant remains eligible for a raise of grade while on probation as a result of action under part 5 of this chapter. A raise of grade issued to a person on probation will be subject to the same probationary conditions imposed against his or her other credentials. The offense for which he or she was placed on probation will be considered on the merits of the case in determining fitness to hold the endorsement applied for. No applicant will be examined for a raise of grade during any period when a suspension without probation or a revocation imposed under part 5 of this chapter is effective against his or her credential or while an appeal from these actions is pending.

(3) *Professional examination.* (i) When the Coast Guard finds an applicant's experience and training for raise of grade is satisfactory, and the applicant is eligible in all other respects, the Coast Guard will authorize a professional examination.

(ii) Oral-assisted examinations may be administered in accordance with § 11.201(j) of this subchapter.

(iii) The general instructions for administration of examinations and the lists of subjects for all endorsements are found in part 11, subpart I; part 12, subpart E; and part 13, subpart A of this subchapter.

25. Add § 10.232 to read as follows:

§ 10.232 Sea service.

(a) *Documenting sea service.* (1) Sea service may be documented in various forms such as certificates of discharge, pilotage service and billing forms, and service letters or other official documents from marine companies signed by the owner, operator, master, or chief engineer of the vessel. The Coast Guard must be satisfied as to the authenticity and acceptability of all evidence of experience or training presented.

(2) The documentary evidence produced by the applicant must contain the following information:

(i) Vessel name(s) and official numbers listed on the registration, certificate, or document issued;

(ii) Gross tonnage of the vessel;

(iii) Propulsion power and mode of propulsion of the vessel;

(iv) The amount and nature (e.g., chief mate, assistant engineer, etc.) of the applicant's experience;

(v) Applicable dates of service for each vessel, and the ports or terminals, if applicable; and

(vi) The routes upon which the experience was acquired.

(3) An MMC endorsement, in certain cases, may be considered as satisfactory evidence of any qualifying experience for obtaining other endorsements.

(4) For service on vessels of less than 200 GRT/500 GT, owners of vessels may attest to their own service and provide proof of ownership. Those who do not own a vessel must obtain letters or other evidence from licensed personnel or the owners of the vessels listed.

(5) If the required sea service is associated with watchkeeping functions and the performance of duties, as required in §§ 11.323, 11.328, 11.333, and 11.470, 11.474, and 11.482 of this subchapter, the service must be documented as having been carried out under the direct supervision of the appropriate person.

(b) Service toward an oceans, near-coastal, or STCW endorsement will be credited as follows:

(1) Service on the Great Lakes will be credited on a day-for-day basis.

(2) Service on inland waters, other than Great Lakes, that are navigable waters of the United States, may be substituted for up to 50 percent of the total required service.

(c) *Sea service as a member of the Armed Forces of the United States and civilian service on vessels owned by the United States as required experience.* (1) Sea service as a member of the Armed Forces of the United States will be accepted as required experience for an original, raise of grade, renewal, or increase in scope of all endorsements. In most cases, military sea service will have been performed upon ocean waters; however, inland service, as may be the case on smaller vessels, will be credited in the same manner as conventional evaluations. The applicant must submit an official transcript of sea service or history of assignments as verification of the service claimed when the application is submitted. A DD–214 is not acceptable evidence of sea service. The applicant must also provide the Coast Guard with other necessary information as to tonnage, routes, propulsion power, percentage of time underway, and assigned duties upon the vessels which he or she served. Such service will be evaluated by the Coast Guard for a determination of its equivalence to sea service acquired on merchant vessels and the appropriate grade, class, and limit of endorsement for which the applicant is eligible. Normally, 60 percent of the total time onboard is considered equivalent underway service; however, the periods of operation of each vessel may be evaluated separately. In order to be eligible for a master's or chief engineer's unlimited endorsement, the applicant must have acquired military service in the capacity of commanding officer or engineer officer, respectively.

(2) Applicants for management-level, operational-level, or support-level STCW endorsements must demonstrate competence in accordance with part 11, subpart C; part 12, subpart F; and part 13, subpart F of this subchapter.

(3) Service in deck ratings on military vessels such as seaman apprentice, seaman, boatswain's mate, quartermaster, or Radarman/Operations Specialist are considered deck service for the purposes of this part. Service in other ratings may be considered if the applicant establishes that his or her duties required a watchstanding presence on or about the bridge of a vessel. Service in engineer ratings on military vessels such as fireman apprentice, fireman, engineman, machinists, mate, machinery technician, or boiler tender are considered engineer service for the purposes of this part. There are also other ratings such as electrician, hull technician, or damage controlman, which may be credited when the applicant establishes that his or her duties required watchstanding duties in an operating engine room.

(4) In addition to service on vessels that get underway regularly, members of the Armed Forces may obtain creditable service for assignment to vessels that get underway infrequently, such as tenders and repair vessels. Normally, a 25-percent factor is applied to these time periods. This experience can be equated with general shipboard familiarity, training, ship's business, and other related duties.

(5) Sea service obtained on submarines is creditable, as if it were surface vessel service, for deck and engineer officer and qualified ratings endorsements under the provision of paragraph (a) of this section. For application for deck officer and qualified ratings endorsements, submarine service may be creditable if at least 25 percent of all service submitted for the endorsement was obtained on surface vessels (e.g., if 4 years' total service were submitted for an original officer endorsement, at least 1 year must have been obtained on surface craft in order for the submarine service to be eligible for evaluation).

(6) Service gained in a civilian capacity as commanding officer, master, mate, engineer, or pilot, etc., of any vessel owned and operated by the United States, in any service in which a license or officer endorsement as master, mate, engineer, or pilot was not required at the time of such service, will be evaluated by the Coast Guard for a determination of equivalence.

(d) *Sea service on vessels that do not get underway.* This requirement applies to service obtained on vessels mandated by the Certificate of Inspection (COI) which are in operation but do not get underway or occasionally get underway for short voyages. Service while the vessel is not underway must be credited as follows:

(1) *Engineering department.* Service may be credited day-for-day for up to 50 percent of the service credit for renewal, raise in grade, and original issue for each day the engineering plant is operational.

(2) *Deck department.* Service may be credited as follows:

(i) *Original issue and raise in grade.* Service is creditable on a 3-for-1 basis (12 months of experience equals 4 months of creditable service) for up to 6 months of service credit.

(ii) *Renewal.* Service in any capacity in the deck department is creditable as closely related service under § 10.227(e)(1)(iv). When submitted in combination with underway service, service is creditable on a 3-for-1 basis (12 months of experience equals 4 months of creditable service) for up to 6 months of service credit.

(e) *Foreign sea service.* (1) Experience and service acquired on foreign vessels is creditable for establishing eligibility for an original or renewal of an officer, rating, or STCW endorsement, subject to evaluation by the Coast Guard to determine that it is a fair and reasonable equivalent to service acquired on merchant vessels of the United States with respect to grade, tonnage, horsepower, waters, and operating conditions. This experience and service is also creditable to meet recency requirements.

(2) Experience and service acquired on foreign vessels while holding a valid U.S. endorsement is creditable for establishing eligibility for a raise of grade of an officer, rating, or STCW endorsement, subject to evaluation as specified in paragraph (d)(1) of this section. This experience and service is also creditable to meet recency requirements.

(3) An applicant who has obtained qualifying experience on foreign vessels must submit satisfactory documentary evidence of such service (including any necessary official translation to the English language) in accordance with paragraph (a)(1) and (a)(2) of this section.

(f) *Closely related service.* The Coast Guard may accept evidence of employment in a position closely related to the operation, construction, or repair of vessels (either deck or engineer as appropriate) as meeting the sea service requirements for renewal under § 10.227(e)(1)(iv). Service as port engineer, port captain, shipyard superintendent experience, instructor service, or similar related service may be creditable for service for raise of grade of an engineer or deck officer endorsement; however, it may not be used for obtaining an original management-level endorsement. The service is creditable as follows:

(1) Port engineer, port captain or shipyard superintendent experience is creditable on a 3-for-1 basis for a raise of grade. (12 months of experience equals 4 months of creditable service.)

(2) Service as a bona fide instructor in Coast Guard-approved courses or a training program is creditable on a 2-for-1 basis for a raise of grade. (12 months

of experience equals 6 months of creditable service.)

(g) *Day.* (1) Except as noted otherwise, for the purpose of calculating service in this subchapter, a day is equal to 8 hours of watchstanding or day-working not to include overtime.

(2) On vessels authorized by 46 U.S.C. 8104 and 46 CFR 15.705, to operate a two-watch system, a 12-hour working day may be creditable as 1½ days of service.

(3) On vessels of less than 100 GRT, a day is considered as 8 hours unless the Coast Guard determines that the vessel's operating schedule makes this criterion inappropriate; in no case will this period be less than 4 hours.

(4) When computing service on MODUs for any endorsement, a day of MODU service must be a minimum of 4 hours, and no additional credit is received for periods served over 8 hours.

26. Amend § 10.235 as follows:

a. In paragraph (d), after the words ''of those endorsements are suspended or revoked,'', remove the words ''the mariner'' and add, in their place, the words ''he or she'', and after the words ''will be issued'', add the words '', without payment of a fee,'';

b. In paragraph (e), after the words ''has been suspended'', add the words ''without probation'';

c. Redesignate paragraphs (f) through (h) as paragraphs (g) through (i);

d. Add new paragraph (f) to read as set down below;

e. In new paragraph (g), remove the text ''§ 10.227(d)(8)(vi)(A)'' and add, in its place, the words ''§ 10.227(e)(6)(i) of this subpart'';

f. In new paragraph (h), remove the words ''Beginning April 15, 2009, if'' and add, in their place, the word ''If''; and

g. In new paragraph (i), remove the words ''Beginning April 15, 2009, a'' and add, in their place, the letter ''A''.

§ 10.235 Suspension or revocation of merchant mariner credentials.

* * * * *

(f) When applying for an original endorsement on an MMC, pursuant to paragraph (d) of this section, an individual's existing service and training may be considered by the Coast Guard when determining the grade of the endorsement to be issued.

* * * * *

27. Revise § 10.239 to read as follows:

§ 10.239 Quick reference table for MMC requirements.

Table 10.239 of this section provides a guide to the requirements for officer endorsements. Provisions in the reference section are controlling.

TABLE 10.239—QUICK REFERENCE TABLE FOR MMC REQUIREMENTS

[For tankerman endorsements, see table 13.129]

Endorsement category	Minimum age	Citizenship	Medical and physical exam	Experience	Recommendations and character check	Firefighting	Professional exam	Demonstration of professional ability	Recency of service	First aid and CPR
Master, mates.	§ 11.201(e) ..... Note: exceptions.	U.S., § 10.221(a)(1) § 11.201(d).	§ 10.302(a)	46 CFR Part 11—Subpart D.	N/A.: ..... Note exceptions in § 11.201(g) for original domestic or STCW endorsements.	§ 11.201(h)	§ 11.201(j); § 11.903; § 11.910. Note: § 11.903 (b).	N/A	original § 11.201 (c)(2). renewal § 10.227(e).	§§ 11.201(i) Note: exceptions
OUPV	§ 11.201(e) ..... Note: exceptions here and in § 11.201(l).	§ 10.221(a)(1) § 11.201(d).	§ 10.302(a)	§ 11.467(c); (d); (e); (f); (g).	N/A.: ..... Note exceptions in § 11.201(g) for original domestic or STCW endorsements.	N/A	§ 11.201(j); § 11.903; § 11.910.	N/A	original § 11.201 (c)(2). renewal § 10.227(e).	§§ 11.201(i): Note exceptions
STCW Deck Officer endorsements.	§ 11.201(e) ..... Note: exceptions.	U.S., § 10.221(a)(1) § 11.201(d).	§ 10.302(a)	46 CFR Part 11—Subpart C.	N/A.: ..... Note exceptions in § 11.201(g) for original domestic or STCW endorsements.	§ 11.301(c) ..... Renewal: § 11.301 (c)(2); (3).	N/A	Master § 11.305; .311; .315; .317. Chief Mate § 11.307; .313; OICNW § 11.309; .319; .321.	original § 11.201 (c)(2). renewal § 10.227(e).	§ 11.201(i)
Officer on a passenger ship when on an international voyage.	N/A	N/A	N/A	N/A	N/A	N/A	N/A	§ 11.1105 (a)(1); (2).	§ 11.1105(c) ...	N/A
Engineers (original).	§ 11.201(e) ..... Note: exceptions.	U.S., § 10.221(a)(1) § 11.201(d).	§ 10.302(a)	46 CFR Part 11—Subpart E.	N/A.: ..... Note exceptions in § 11.201(g) for original domestic or STCW endorsements.	§ 11.201(h)	§ 11.201(j); § 11.903; § 11.950. Note: § 11.903 (b).	N/A	original § 11.201 (c)(2). renewal § 10.227(e).	§ 11.201(i)
STCW Engineering Officer endorsements.	§ 11.201(e) ..... Note: exceptions.	U.S., § 10.221(a)(1) § 11.201(d).	§ 10.302(a)	46 CFR Part 11—Subpart C.	N/A.: ..... Note exceptions in § 11.201(g) for original domestic or STCW endorsements.	§ 11.301(c) ..... Renewal: § 11.301 (c)(2); (3).	N/A	Chief § 11.325; § 11.331; 2nd engineer officer; § 11.327; § 11.333. OICEW/DDE § 11.329.	original § 11.201 (c)(2). renewal § 10.227(e).	§ 11.201(i)

TABLE 10.239—QUICK REFERENCE TABLE FOR MMC REQUIREMENTS—Continued
[For tankerman endorsements, see table 13.129]

Endorsement category	Minimum age	Citizenship	Medical and physical exam	Experience	Recommendations and character check	Firefighting	Professional exam	Demonstration of professional ability	Recency of service	First aid and CPR
Domestic Designated Duty Engineer (DDE).	§ 11.201(e) ..... Note: exceptions.	U.S., § 10.221(a)(1) § 11.201(d).	§ 10.302(a)	§ 11.524(b)	N/A.: ..... Note exceptions in § 11.201(g) for original domestic or STCW endorsements.	§ 11.201 (h)(1)(iv).	§ 11.903	N/A	original § 11.201 (c)(2). renewal § 10.227(e).	§ 11.201(i)
Electro-technical officer.	§ 11.201(e) ..... Note: exceptions.	U.S., § 10.221(a)(1) § 11.201(d).	§ 10.302(a)	§ 11.335(a)(1) note exception in § 11.335 (b) & § 11.335(c).	N/A.: ..... Note exceptions in § 11.201(g) for original domestic or STCW endorsements.	§ 11.335 (a)(3)(ii).	N/A	§ 11.335(a)(2), (3). note exception § in 11.335 (b) & (c).		§ 11.335 (a)(3)(i)
Pilot	§ 11.201(e) ..... Note: exceptions.	U.S., § 10.221(a)(1) § 11.201(d).	§ 10.302(a); § 11.709.	§ 11.703; § 11.705.	N/A.: ..... Note exceptions in § 11.201(g) for original domestic or STCW endorsements.	N/A	§ 11.707; § 11.903; § 11.910.	§ 11.705	§ 11.705(e), § 11.713.	§ 11.201(i)
Towing vessels.	§ 11.201(e) ..... Note: exceptions.	U.S., § 10.221(a)(1) § 11.201(d).	§ 10.302(a)	46 CFR Part 11—Subpart D.	N/A.: ..... Note exceptions in § 11.201(g) for original domestic or STCW endorsements.	§ 11.201 (h)(1)(ii). § 11.201 (h)(2)(ii). Note: exceptions.	§ 11.201(j); § 11.903; § 11.910.	§ 11.464; § 11.465.	original § 11.201 (c)(2). renewal § 10.227(e).	§ 11.201(i)
Offshore Supply Vessels.	§ 11.201(e) ..... Note: exceptions.	U.S., § 10.221(a)(1) § 11.201(d).	§ 10.302(a)	Master § 11.493. Chief Mate § 11.495. Mate § 11.497 C/E § 11.553. Asst Engineer § 11.555.	N/A.: ..... Note exceptions in § 11.201(g) for original domestic or STCW endorsements.	§ 11.201(h)	§ 11.201(j); ..... Master § 11.493. Chief Mate § 11.495. Mate § 11.497 C/E § 11.553; § 11.903. Asst. Eng § 11.555; § 11.903.	Master § 11.493. Chief Mate § 11.495. Mate § 11.497 C/E § 11.553. Asst Engineer § 11.555.	original § 11.201 (c)(2). renewal § 10.227(e).	§ 11.201(i)
MODU licenses.	§ 11.201(e) ..... Note: exceptions.	U.S., § 10.221(a)(1) § 11.201(d).	§ 10.302(a)	OIM: § 11.470 B.S.: § 11.472 BCO: § 11.474 ChEng: § 11.542. Asst. Eng: § 11.544.	N/A.: ..... Note exceptions in § 11.201(g) for original domestic or STCW endorsements.	§ 11.201(h): .... note exceptions.	§ 11.201(j); § 11.903; § 11.920.	N/A	original § 11.201 (c)(2). renewal § 10.227(e).	§ 11.201(i)
Uninspected fishing industry vessels.	§ 11.201(e) ..... Note: exceptions.	U.S., § 10.221(a)(1) § 11.201(d).	§ 10.302(a)	Deck: § 11.462(c); (d);. Engine: § 11.530(c); (d); (e).	N/A.: ..... Note exceptions in § 11.201(g) for original domestic or STCW endorsements.	§ 11.201(h) ..... Note: exceptions.	§ 11.201(j); § 11.903; § 11.910.	N/A	original § 11.201 (c)(2). renewal § 10.227(e).	§ 11.201(i)
Radio officer	§ 11.201(e) ..... Note: exceptions.	U.S., § 10.221(a)(1) § 11.201(d).	§ 10.302(a)	N/A	N/A.: ..... Note exceptions in § 11.201(g) for original domestic or STCW endorsements.	N/A	N/A	§ 11.603	N/A	§ 11.201(i)
GMDSS Operator.	N/A	N/A	N/A	N/A	N/A	N/A	N/A	§ 11.604	N/A	N/A
Officer raises of grade.	§ 11.201(e) ..... Note: exceptions.	U.S., § 10.221(a)(1) § 11.201(d).	§ 10.302(a)	§ 10.231(c); Part 11, subparts D and E.	N/A	N/A	§ 10.231(d); § 11.903; § 11.910; § 11.920; § 11.950.	Part 11, subparts D and E.	3 months in past 3 years, § 11.201 (c)(2).	N/A
Officer renewals.	§ 11.201(e) ..... Note: exceptions.	U.S., § 10.221(a)(1) § 11.201(d).	§ 10.302(a)	§ 10.227(d) and (e). Note: exceptions.	N/A	N/A	N/A	Towing officers, § 10.227(d) and (e).	1 year in past 5, § 10.227(e) and (f). Note: alternative.	N/A
Staff officer ..	§ 11.201(e) ..... Note: exceptions.	U.S., § 10.221(a)(1) § 11.201(d).	§ 10.302(a)	§ 11.807	N/A.: ..... Note exceptions in § 11.201(g) for original domestic or STCW endorsements.	N/A	N/A	§ 11.807	N/A	§ 11.201(i)

TABLE 10.239—QUICK REFERENCE TABLE FOR MMC REQUIREMENTS—Continued
[For tankerman endorsements, see table 13.129]

Endorsement category	Minimum age	Citizenship	Medical and physical exam	Experience	Recommendations and character check	Firefighting	Professional exam	Demonstration of professional ability	Recency of service	First aid and CPR
Staff officer renewals.	§ 11.201(e) ..... Note: exceptions.	U.S., § 10.221(a)(1) § 11.201(d).	§ 10.302(a)	N/A	N/A.	N/A	N/A	N/A	N/A	N/A
Able seaman	§ 12.401(c)(1)	U.S. or alien admitted for permanent residence, § 10.221(a)(2).	§ 10.302(a), § 12.401 (c)(2).	§ 12.403	N/A.	N/A	§ 12.401(c)(5)	§ 12.401(c)(6) § 12.405.	Renewal only, 1 year in past 5, § 10.227(e) and (f). Note: alternative.	N/A
Able-seafarer deck.	§ 12.603(a)(1)	U.S. or alien admitted for permanent residence, § 10.221(a)(2).	§ 10.302(a)	§ 12.603(a)(3)	N/A	N/A	N/A	§ 12.603(a)(2) § 12.603 (a)(4) § 12.603 (a)(5).	Renewal only, 1 year in past 5, § 10.227(e) and (f). Note: alternative.	§ 12.601(c)
Ratings for forming a navigational watch.	§ 12.605(a)(1)	U.S. or alien admitted for permanent residence, § 10.221(a)(2).	§ 10.302(a)	§ 12.605(a)(2)	N/A.	N/A	N/A	§ 12.605(a)(3)	Renewal only, 1 year in past 5, § 10.227(e) and (f). Note: alternative.	§ 12.601(c)
Qualified members of engine department.	§ 12.501(c)(1)	U.S. or alien admitted for permanent residence, § 10.221(a)(2).	§ 10.302(a)	§ 12.503	N/A.	N/A	§ 12.505	N/A	Renewal only, 1 year in past 5, § 10.227(e) and (f). Note: alternative.	N/A
Able-seafarer engine.	§ 12.607(a)(1)	U.S. or alien admitted for permanent residence, § 10.221(a)(2).	§ 10.302(a)	§ 12.607(a)(3)	N/A.	N/A	N/A	§ 12.607(a)(2); (4) § 12.607 (b); (c).	Renewal only, 1 year in past 5, § 10.227(e) and (f). Note: alternative.	§ 12.601(c)
Ratings for forming an engineering watch.	§ 12.609(a)(1)	U.S. or alien admitted for permanent residence, § 10.221(a)(2).	§ 10.302(a)	§ 12.609(a)(2)	N/A.	N/A	N/A	§ 12.609(a)(3)	Renewal only, 1 year in past 5, § 10.227(e) and (f). Note: alternative.	§ 12.601(c)
Electro-technical rating.	§ 12.611(a)(1)	U.S. or alien admitted for permanent residence, § 10.221(a)(2).	§ 10.302(a)	§ 12.611(a)(2)	N/A	N/A	N/A	§ 12.611(a)(3); § 12.611(b); (c).	Renewal only, 1 year in past 5, § 10.227(e) and (f). Note: alternative.	§ 12.601(c)
Entry level ratings.	N/A	U.S. or alien admitted for permanent residence, § 10.221(a)(2) § 12.803; § 12.809.	N/A; note exception in § 12.811 (a)(2). Note: Food Handler (F.H.) requirements in Table § 10.302 (a)(xiii) § 10.302(a) (xiv).	N/A	N/A	N/A	N/A	N/A	N/A	N/A
Lifeboatman	N/A	U.S. or alien admitted for permanent residence, § 10.221(a)(2).	§ 10.302(a)	§ 12.407(b)(1)	N/A	N/A	§ 12.407(b)(2); (4).	§ 12.407(b)(2); (3).	Renewal only, 1 year in past 5, § 10.227(e) and (f). Note: alternative.	N/A
Lifeboatman—Limited.	N/A	U.S. or alien admitted for permanent residence, § 10.221(a)(2).	§ 10.302(a)	§ 12.409(b)(1)	N/A.	N/A	§ 12.409(b)(2); (4).	§ 12.409(b)(2); (3).	Renewal only, 1 year in past 5, § 10.227(e) and (f). Note: alternative.	N/A
Proficiency in fast rescue boats.	§ 12.617(a)(1)	U.S. or alien admitted for permanent residence, § 10.221(a)(2).	N/A	N/A	N/A	N/A	N/A	§ 12.617(a)(2); (3); (4).	Renewal only, 1 year in past 5, § 10.227(e) and (f). Note: alternative. Renewal § 12.617 (b)(2).	§ 12.601(c)

TABLE 10.239—QUICK REFERENCE TABLE FOR MMC REQUIREMENTS—Continued
[For tankerman endorsements, see table 13.129]

Endorsement category	Minimum age	Citizenship	Medical and physical exam	Experience	Recommendations and character check	Firefighting	Professional exam	Demonstration of professional ability	Recency of service	First aid and CPR
Proficiency in survival craft and rescue boats other than fast rescue boats.	§ 12.613(a)(1)	U.S. or alien admitted for permanent residence, § 10.221(a)(2).	N/A	§ 12.613(a)(2)	N/A	N/A	N/A	§ 12.613(a)(3)	Renewal only, 1 year in past 5, § 10.227(e) and (f). Note: alternative. Renewal: § 12.613 (b)(2).	§ 12.601(c)
Proficiency in survival craft and rescue boats other than lifeboats and fast rescue boats-limited.	§ 12.615(a)(1)	U.S. or alien admitted for permanent residence, § 10.221(a)(2).	N/A	§ 12.615(a)(2)	N/A	N/A	N/A	§ 12.615(a)(3)	Renewal only, 1 year in past 5, § 10.227(e) and (e). Note: alternative. Renewal: § 12.615 (b)(2).	§ 12.601(c)
Assistance Towing endorsement.	N/A	N/A	N/A	§ 11.482	N/A	N/A	§ 11.482	§ 11.482	original § 11.201 (c)(2).	N/A
Radar Observer endorsement.	N/A	N/A	N/A	N/A	N/A	N/A	N/A	§ 11.480(d); (h)	N/A	N/A
Vessel Security Officer.	§ 11.811(a)	U.S. or alien admitted for permanent residence, § 10.221(a)(1) § 10.221(a)(2).	§§ 10.302(a)	§ 11.811(a)	N/A.: Note exceptions in § 11.201(g) for original domestic or STCW endorsements.	N/A	N/A	§ 11.811(a)	original § 11.201 (c)(2). renewal § 10.227(e).	§ 11.201(i)
High Speed Craft.	N/A	U.S. § 10.221(a)(1)	N/A	§ 11.821(a)(1) § 11.821(b).	N/A.: Note exceptions in § 11.201(g) for original domestic or STCW endorsements.	N/A	N/A	§ 11.821(a)(2)	Renewal: § 11.821(d).	N/A
GMDSS at sea maintainer.	§ 12.623(a)	N/A	N/A	N/A	N/A	N/A	N/A	§ 12.623(b)	N/A	N/A
Medical first-aid provider.	N/A	N/A	N/A	§ 12.619(b)	N/A	N/A	N/A	§ 12.619(a)(1); (2).	N/A	§ 12.619(a)(1)
Person in charge of medical care.	N/A	N/A	N/A	§ 12.621(b)	N/A	N/A	N/A	§ 12.621(a)(1); (2).	N/A	§ 12.621(a)(1)
Vessel personnel with designated security duties.	§ 12.625(a)(1)	U.S. or alien admitted for permanent residence, § 10.221(a)(2) § 12.803.	§ 12.625(a)(2)	§ 12.625(a)(1)	N/A	N/A	N/A	§ 12.625(a)(1)	Renewal only, 1 year in past 5, § 10.227(e) and (f). Note: alternative.	N/A
Security awareness.	§ 12.627(a)(1)	U.S. or alien admitted for permanent residence, § 10.221(a)(2) § 12.803.	§ 12.627(a)(2)	§ 12.627(a)(1)	N/A	N/A	N/A	§ 12.627(a)(1)	Renewal only, 1 year in past 5, § 10.227(e) and (f). Note: alternative.	N/A
Ratings serving on passenger ships on international voyages.	N/A	N/A	N/A	N/A	N/A	N/A	N/A	§ 12.905(a); (b)	Renewal § 12.905(d).	N/A

28. Add subpart C, consisting of §§ 10.301 through 10.306, to read as follows:

Subpart C—Medical Certification

Sec.
10.301 General requirements.
10.302 Medical and physical requirements.
10.303 Medical waivers.
10.304 General medical exam.
10.305 Vision requirements.
10.306 Hearing requirements.

§ 10.301 General requirements.

(a) The Coast Guard will issue a medical certificate/endorsement to a mariner meeting the medical and physical standards for merchant mariners. The medical certificate/endorsement will be issued for various periods of time based upon the endorsements the mariner holds. If the Coast Guard, after reviewing all relevant supporting medical documents and consultation with an examining medical professional as provided in § 10.302(b),

determines that an applicant's condition may directly impact safety, and therefore does not meet the required medical and/or physical standard, the Coast Guard may place an operational limitation on the medical certificate/endorsement, issue a medical waiver, or deny a medical certificate.

(b) Except as otherwise noted, medical certificates/endorsements will be issued for the following periods of time:

(1) Medical certificates/endorsements issued to a mariner serving under the authority of an STCW endorsement will be issued for a maximum period of 2 years unless the mariner is under the age of 18, in which case the maximum period of validity will be 1 year.

(2) Medical certificates/endorsements issued to a mariner who is serving as a first-class pilot, or acting as a pilot under § 15.812 of this subchapter, will be issued for a maximum period of 1 year.

(3) Medical certificates/endorsements issued to all other mariners will be issued for a maximum period of 5 years.

(4) Applicants seeking additional MMC endorsements holding a current medical endorsement/certificate do not need to submit a new medical physical exam if their existing medical endorsement/certification meets all of the requirements of this section for the endorsement sought.

(c) Individuals holding no endorsement other than a staff officer endorsement need not meet the medical and physical requirements of this section.

§ 10.302 Medical and physical requirements.

(a) To qualify for an MMC, a mariner must provide evidence of meeting the medical and physical standards in this section on a CG–719–K or CG–719–K/E, as appropriate. The Coast Guard retains final authority for determining whether a mariner is medically and physically qualified. Columns 2 through 5 of Table 10.302(a) of this section provide the specific exam, test, or demonstrations required to obtain the corresponding credential listed in column 1. Further clarifications of the requirements contained in the table are found throughout this subpart.

TABLE 10.302(a)—MEDICAL AND PHYSICAL REQUIREMENTS FOR MARINER ENDORSEMENTS

Credential	Vision test	Hearing test	General medical exam	Demonstration of physical ability
1	2	3	4	5
(i) Deck officer, including pilot	§ 10.305(a)	§ 10.306	§ 10.304(a)	§ 10.304(d)
(ii) Engineering officer	§ 10.305(b)	§ 10.306	§ 10.304(a)	§ 10.304(d)
(iii) Radio officer	§ 10.305(b)	§ 10.306	§ 10.304(a)	§ 10.304(d)
(iv) Offshore installation manager, barge supervisor, or ballast control operator	§ 10.305(b)	§ 10.306	§ 10.304(a)	§ 10.304(d)
(v) Able seaman	§ 10.305(a)	§ 10.306	§ 10.304(a)	§ 10.304(d)
(vi) QMED	§ 10.305(b)	§ 10.306	§ 10.304(a)	§ 10.304(d)
(vii) Able seafarer deck	§ 10.305(a)	§ 10.306	§ 10.304(a)	§ 10.304(d)
(viii) RFPNW	§ 10.305(a)	§ 10.306	§ 10.304(a)	§ 10.304(d)
(ix) Able seafarer engine	§ 10.305(a)	§ 10.306	§ 10.304(a)	§ 10.304(d)
(x) RFPEW	§ 10.305(b)	§ 10.306	§ 10.304(a)	§ 10.304(d)
(xi) Electro-technical rating	§ 10.305(b)	§ 10.306	§ 10.304(a)	§ 10.304(d)
(xii) Tankerman	§ 10.305(b)	§ 10.306	§ 10.304(a)	§ 10.304(d)
(xiii) Lifeboatman and Proficiency in survival craft and rescue boats other than fast rescue boats (PSC)	§ 10.305(b)	§ 10.306	§ 10.304(a)	§ 10.304(d)
(xiv) Lifeboatman-Limited and Proficiency in survival craft and rescue boats other than fast rescue boats-limited (PSC-limited)	§ 10.305(b)	§ 10.306	§ 10.304(a)	§ 10.304(d)
(xv) Fast Rescue Boat	§ 10.305(b)	§ 10.306	§ 10.304(a)	§ 10.304(d)
(xvi)Food handler serving on vessels to which STCW does not apply			§ 10.304(b)	
(xvii) Food handler serving on vessels to which STCW applies			§ 10.304(b)	§ 10.304(d)
(xviii) Ratings, including entry level, serving on vessels to which STCW applies, other than those listed above				§ 10.304(d)
(xix) Ratings, including entry level, serving on vessels to which STCW does not apply, other than those listed above				
(xx) Vessel security officer	§ 10.305(a)	§ 10.306	§ 10.304(a)	§ 10.304(d)

(b) Any required test, exam, or demonstration must have been performed, witnessed, or reviewed by a licensed medical doctor, licensed physician assistant, licensed nurse practitioner, or a designated medical examiner. Medical examinations for Great Lakes Pilots must be conducted by a licensed medical doctor in accordance with the physical exam requirements in 46 CFR 402.210.

§ 10.303 Medical waivers.

(a) The Coast Guard may grant a waiver if, after review of all relevant supporting medical documents and consultation with the examining physician, as needed, an applicant does not possess the vision, hearing, or general physical condition necessary; and extenuating circumstances warrant special consideration. An applicant may submit to the Coast Guard additional correspondence, records, and reports in support of a waiver. In this regard, recommendations from agencies of the Federal Government operating government vessels, as well as owners and operators of private vessels, made on behalf of their employees, will be given full consideration.

(b) In general, medical waivers are approved for medical conditions and medications when objective medical evidence indicates that the condition is sufficiently controlled and the effects of medication pose no significant risk to maritime and public safety. The Coast Guard retains final authority for the issuance of medical waivers.

(c) Medical waivers may be granted for specific conditions to which the applicant must adhere, such as more frequent medical monitoring of the medical conditions, submission of medical exams and/or tests at varying intervals to track the ongoing status of the medical condition, or operational limitations in the manner the applicant may serve under the MMC. Medical waivers will not be reflected in the

medical certificate/endorsement. The waiver information will be issued separately and must be readily available upon request.

(d) The Coast Guard may place an operational limitation based on medical and physical conditions. Any operational limitations will be reflected in the medical certificate/endorsement.

§ 10.304 General medical exam.

(a) The general medical exam must be documented and of such scope to ensure that there are no conditions that pose significant risk of sudden incapacitation or debilitating complication. This exam must also document any condition requiring medication that impairs cognitive ability, judgment, or reaction time. Examples of physical impairment or medical conditions that could lead to disqualification include, but are not limited to, poorly controlled diabetes, symptomatic coronary artery disease, placement of cardiac defibrillators, symptomatic psychiatric disorders, and convulsive disorders.

(b) Food handlers are not required to submit to a general medical exam, but must obtain a statement from a licensed physician, physician assistant, or nurse practitioner attesting that they are free of communicable diseases.

(c) The Coast Guard will provide guidance on the conduct of general medical exams. Examiners should be familiar with the content and recommended medical evaluation data compiled in the medical guidelines.

(d) *Demonstration of physical ability.* (1) A demonstration of physical ability is required only if the medical practitioner conducting the general medical exam is concerned that:

(i) The medical practitioner conducting the general medical exam is concerned that an applicant's physical ability may impact maritime safety; or

(ii) Table 10.302(a) of § 10.302 of this subpart shows that the mariner must pass a demonstration of physical ability. Guidance on demonstration of physical ability is contained in the relevant Coast Guard guidance for the conduct of general medical exams.

(2) For an applicant to satisfactorily pass a demonstration of physical ability, the examiner must be satisfied that the applicant:

(i) Has no disturbance in the sense of balance;

(ii) Is able, without assistance, to climb up and down vertical ladders and inclined stairs;

(iii) Would be able, without assistance, to step over a door sill or coaming;

(iv) Is able to move through a restricted opening of 24-by-24 inches (61-by-61 centimeters);

(v) Would be able to grasp, lift, and manipulate various common shipboard tools; move hands and arms to open and close valve wheels in vertical and horizontal directions; and rotate wrists to turn handles;

(vi) Does not have any impairment or disease that could prevent normal movement and physical activities;

(vii) Is able to stand and walk for extended periods of time;

(viii) Does not have any impairment or disease that could prevent response to a visual or audible alarm; and

(ix) Is capable of normal conversation.

(e) *Reports of medical and physical exams, demonstrations, and tests.* These reports must be submitted within 12 months from the date signed by the licensed medical professional. When submitted with a complete application package, these reports remain valid for 12 months from the date the Coast Guard accepts a complete application.

§ 10.305 Vision requirements.

(a) *Deck standard.* (1) A mariner must have correctable vision to at least 20/40 in one eye and uncorrected vision of at least 20/200 in the same eye. The color sense must be determined to be satisfactory when tested by any of the following methods or an alternative test acceptable to the Coast Guard, without the use of color-sensing lenses:

(i) Pseudoisochromatic Plates (Dvorine, 2nd Edition; AOC; revised edition or AOC–HRR; Ishihara 14-, 24-, or 38-plate editions).

(ii) Farnsworth Lantern.

(iii) Titmus Vision Tester/OPTEC 2000.

(iv) Optec 900.

(v) Richmond Test, 2nd and 4th edition.

(2) After January 1, 2017, applicants for an STCW endorsement must have correctable vision to at least 20/40 in both eyes and uncorrected vision of at least 20/200 in both eyes. A mariner who meets these requirements and who suffers loss of vision in one eye after being issued an MMC is subject to the requirements of paragraphs (c), (d), and (e) of this section, as applicable. A mariner holding an MMC prior to January 1, 2017, must continue to meet the requirements of paragraph (a) (1) of this section.

(b) *Engineering, radio officer, tankerman, and MODU standard.* A mariner must have correctable vision to at least 20/50 in one eye and uncorrected vision of at least 20/200 in the same eye and need only the ability to distinguish the colors red, green, blue, and yellow. The color sense must be determined to be satisfactory when tested by any color-vision test listed in paragraph (a) of this section, with the exception of the Farnsworth Lantern, or an alternative test acceptable to the Coast Guard, without the use of color-sensing lenses.

(c) *Vision waiver.* Any applicant whose uncorrected vision does not meet the 20/200 standard and is correctable to listed standards above may be granted a medical waiver in accordance with § 10.303 of this subpart. If a vision waiver is granted, a limitation will be placed on his or her MMC indicating the mariner may not serve under the authority of the endorsement unless corrective lenses are worn and spare lenses are carried onboard a vessel. Waivers are not normally granted to an applicant whose corrected vision in the better eye is not at least 20/40 for deck officers or 20/50 for engineer officers.

(d) *Vision operational limitation.* If corrective lenses are required in order to meet the vision standards above, a mariner may not serve under the authority of the endorsement unless corrective lenses are worn and spare lenses are carried onboard a vessel. This operational limitation will be placed on his or her MMC.

(e) *Loss of vision.* A mariner having lost vision in one eye must wait 6 months from the date of the vision loss before submitting any application, and must provide a statement of demonstrated ability on his or her medical examination.

§ 10.306 Hearing requirements.

(a) If the medical practitioner conducting the general medical exam has concerns that an applicant's ability to hear may impact maritime safety, the examining medical practitioner must refer the applicant to an audiologist or other hearing specialist to conduct an audiometer test and a speech discrimination test, as appropriate.

(b) The audiometer test must include testing at the following thresholds: 500 Hz; 1,000 Hz; 2,000 Hz; and 3,000 Hz. The frequency responses for each ear must be averaged to determine the measure of an applicant's hearing ability. Applicants must demonstrate an unaided threshold of 30 decibels or less in at least one ear.

(c) The functional speech discrimination test must be carried out at a level of 55 decibels. For issuance of an original MMC or endorsement the applicant must demonstrate functional speech discrimination of at least 90 percent. For renewal or raise of grade, the applicant must demonstrate

functional speech discrimination of at least 80 percent.

(d) *Hearing waivers.* An applicant who is unable to meet the hearing standards of the audiometer test, but who can pass the functional speech discrimination test or who requires hearing aids to meet the hearing standards, may be eligible for a medical waiver in accordance with § 10.303 of this part.

(e) *Hearing operational limitation.* If hearing aids are required in order to meet the hearing standards above, a mariner may not serve under the authority of the endorsement unless hearing aids are worn in the operational mode, and spare batteries are carried onboard a vessel. This operational limitation will be placed on his or her MMC.

29. Add subpart D, consisting of §§ 10.401 through 10.412, to read as follows:

Subpart D—Training Courses and Programs

Sec.
10.401 Applicability.
10.402 Course approval.
10.403 General standards.
10.404 Substitution of training for required service, use of training-record books (TRBs), and use of towing officer assessment records (TOARs).
10.405 Qualification as qualified assessor (QA) and designated examiner (DE) for towing officer assessment records (TOARs).
10.406 Approved courses.
10.407 Coast Guard-approved training program requirements for STCW endorsements.
10.408 Coast Guard-accepted training other than approved courses and programs.
10.409 Coast Guard-accepted Quality Standard System (QSS) organizations.
10.410 Quality Standard System (QSS) requirements.
10.411 Simulator performance standards.
10.412 Distance and e-learning.

§ 10.401 Applicability.

This subpart prescribes the general requirements applicable to offerors of all approved courses and training programs which may be accepted instead of service experience or examination required by the Coast Guard, or which satisfy course completion requirements.

§ 10.402 Course approval.

(a) *Categories.* Courses may be approved to fulfill the following requirements:

(1) Instead of service experience;

(2) Instead of examinations required by the Coast Guard;

(3) Professional competency requirements; and

(4) Regulatory requirements.

(b) *Request for approval.* Organizations desiring course approval by the Coast Guard must submit a written request and a complete curriculum package to the National Maritime Center, either by mail or electronically. The curriculum package must include:

(1) *A cover letter.* The cover letter must contain:

(i) The name of the course;

(ii) The locations where it will be held;

(iii) A general description and overview of the course;

(iv) The category of acceptance being sought as listed in paragraph (a) of this section; and

(v) Individual major components of the course.

(2) *A goal statement(s).* The goal statement should describe:

(i) The specific performance behaviors to be measured;

(ii) The conditions under which the performance behaviors will be exhibited; and

(iii) The level of performance behaviors that is to be achieved.

(3) *Performance objectives.* Performance objectives are statements which identify the specific knowledge, skill, or ability the student should gain and display as a result of the training or instructional activity. A performance objective is made up of three elements: expected student performance, condition, and criterion.

(4) *Assessment instruments.* Assessment instruments are any tools used to determine whether the student has achieved the desired level of knowledge, understanding, or proficiency.

(5) *Instructor information.* Each instructor must:

(i) Have either experience, training, or evidence of instruction in effective instructional techniques within the past 5 years;

(ii) Be qualified in the task for which the training is being conducted and have relevant experience; and

(iii) Hold a license, endorsement, or other professional credential that provides proof of having attained a level of qualification equal or superior to the relevant level of knowledge, skills, and abilities described in the performance objective. A Document of Continuity may be used to meet this requirement.

(6) *Site information.* Site information must include a description of the facility or facilities at which the training will be held. Authority to teach at an alternative site requires approval by the National Maritime Center.

(7) *A teaching syllabus.* A detailed teaching syllabus providing the following information:

(i) *Instructional strategy.* Aspects of instructional strategies should include:

(A) The order of presentation;

(B) The level of interaction, including the student-to-teacher ratio;

(C) Feedback;

(D) Remediation;

(E) Testing strategies; and

(F) Media used to present information.

(ii) Instructional materials, including lesson plans containing:

(A) Pre-instructional activities;

(B) Content presentation;

(C) Student participation;

(D) Assessment processes; and

(E) Other instructional activities, such as homework and reading assignments.

(iii) Course surveys on the relevance and effectiveness of the training completed by students.

(iv) Course schedule, including the duration and order of lessons, and an indication as to whether each lesson is:

(A) A classroom lecture;

(B) A practical demonstration;

(C) A simulator exercise;

(D) An examination; or

(E) Another method of instructional reinforcement.

(8) *Course completion certificate.* A sample course completion certificate.

(c) *Approval notification.* The Coast Guard will notify each applicant for course approval when an approval is granted or denied. If the Coast Guard denies a request for approval, the Coast Guard will inform the applicant of the reasons for the denial and describe the corrections required for granting an approval.

(d) *Validity of course approval.* Unless surrendered, suspended, or withdrawn, an approval for a course is valid for up to a maximum of 5 years after issuance, unless:

(1) The school ceases operation;

(2) The school gives notice that it will no longer offer the course;

(3) The owner or operator fails to submit any required report; or

(4) Any change occurs in the ownership of the school to which the approval was issued.

(e) *Changes to the course approval.* (1) Any changes to the course approval or the content of the course will be handled as a request for renewal of an approval (as specified in paragraph (f) of this section), or as a request for an original approval (as specified in paragraph (b) of this section), depending on the nature and scope of the change.

(2) The Coast Guard may not accept course completion certificates if the course does not follow the conditions of the course approval.

(f) *Renewal of course approval.* If the owner or operator of a training school

desires to have a course's approval renewed, the owner or operator must submit a request to the NMC accompanied by the information from paragraphs (b)(1), (b)(5), (b)(6), and (b)(7) of this section. If satisfied that the content and quality of instruction remain satisfactory, the Coast Guard will approve the request. The renewed approval is valid as detailed in paragraph (d) of this section.

(g) *Suspension of approval.* (1) The Coast Guard may suspend the approval, require the holder to surrender the certificate of approval, and may direct the holder to cease claiming the course is Coast Guard-approved, if it determines that a specific course does not comply with the:

(i) Applicable provisions of 46 CFR parts 11, 12, or 13;

(ii) Requirements specified in the course's approval; or

(iii) Course's curriculum package as submitted for approval.

(2) The Coast Guard will notify the approval holder in writing of the intent to suspend course approval and the reasons for suspension. If the approval holder fails to correct the conditions leading to suspension, the course will be suspended. The Coast Guard will notify the approval holder that the specific course fails to meet applicable requirements and explain how the deficiencies can be corrected;

(3) The Coast Guard may grant the approval holder up to 90 days to correct the deficiencies; and

(4) Course completion certificates will not be accepted if dated during a period of suspension or expiration.

(h) *Withdrawal of approval.* The Coast Guard may withdraw approval for any course:

(1) When the approval holder fails to correct the deficiencies of a suspended course within 90 days; or

(2) Upon determining that the approval holder has demonstrated a pattern or history of:

(i) Failing to comply with the applicable regulations or the course approval requirements;

(ii) Deviating from approved course curricula;

(iii) Presenting courses in a manner that does not achieve the learning objectives; or

(iv) Falsifying any document required and integral to the conduct of the course, including, but not limited to, attendance records, written test grades, course completion grades, or assessment of practical demonstrations.

(i) *Appeals of suspension or withdrawal of approval.* Anyone directly affected by a decision to suspend or withdraw an approval may appeal the decision to the Commandant as provided in § 1.03–40 of this chapter.

§ 10.403 General standards.

(a) Each school with an approved course must:

(1) Have a well-maintained facility that accommodates the students in a safe and comfortable environment conducive to learning;

(2) Have visual aids for realism, including simulators where appropriate, sufficient for the number of students to be accommodated, and support the objectives of the course;

(3) Administer training entirely in the English language unless specifically approved to be presented in another language;

(4) Administer written examinations to each student appropriate for the course material and the knowledge requirements of the position or endorsement for which the student is being trained. For a course approved to substitute for a Coast Guard-administered examination, the courses must be of such a degree of difficulty that a student who successfully completes them would most likely pass, on the first attempt, an examination prepared by the Coast Guard;

(5) Require each student to successfully demonstrate practical skills appropriate for the course material and equal to the level of endorsement for which the course is approved;

(6) Effective July 1, 2013, keep physical or electronic copies of the following records for at least 5 years after the end of each student's completion or disenrollment from a course or program:

(i) A copy of each student's examination answers;

(ii) A copy of each examination or, in the case of a practical test, a report of such test;

(iii) A record of each student's classroom attendance;

(iv) A copy of each student's course completion certificate or program completion certificate, as appropriate;

(v) A summary of changes or modification to the last course submittal;

(vi) A list of all locations at which the training course was presented and the number of times it was presented at each location;

(vii) The name(s) of the instructor(s) who taught the course;

(viii) The number of students who began the training;

(ix) The number of students who successfully completed the training;

(x) The number of students who were required to retest;

(xi) The number of students who were required to retake the entire course; and

(xii) The number of students who were required to retake a portion of the course.

(7) Not change its approved curriculum without approval from the NMC as specified in § 10.402(e) of this subpart;

(8) Conduct an internal audit midway through the term of the course's approval and maintain the results of the audit for a period of not less than 5 years. The audit will evaluate whether:

(i) Records are being maintained according to these regulations;

(ii) The course is being presented in accordance with the approval letter; and

(iii) Surveys from students indicate that the course is meeting their needs; and

(9) At any time, allow the Coast Guard to:

(i) Inspect its facilities, equipment, and records, including scholastic records;

(ii) Conduct interviews and surveys of students to aid in course evaluation and improvement;

(iii) Assign personnel to observe or participate in the course of instruction; and

(iv) Supervise or administer the required examinations or practical demonstrations, including the substitution of an applicable Coast Guard examination in a course approved to substitute for a Coast Guard-administered examination.

§ 10.404 Substitution of training for required service, use of training-record books (TRBs), and use of towing officer assessment records (TOARs).

(a) *Substitution of training for required service.* (1) Satisfactory completion of an approved training course may be substituted for a portion of the required service on deck or in the engine department for deck or engineer endorsements. Satisfactory completion of an approved training program which includes sea service may be substituted for a portion of or all of the required service on deck or in the engine department, except as limited by law for ratings. The list of all currently approved courses and programs, including the equivalent service and applicable endorsements, is maintained by the NMC.

(2) Unless otherwise allowed, recency requirements may not be achieved by service granted as a result of successful completion of approved training or by training on a simulator; however, underway service obtained as a portion of an approved course or program may be used for this purpose.

(3) Unless otherwise allowed, training obtained before receiving an

endorsement may not be used for subsequent raises of grade, increases in scope, or renewals.

(b) *Use of training-record books (TRBs).* (1) Approved training programs for STCW endorsements for OICNW and OICEW must maintain a TRB for each student where training and/or assessments of competence are conducted onboard the ship. The TRB must contain at least the following information:

(i) The name of the applicant;

(ii) The tasks to be performed or the skills to be demonstrated, with reference to the standards of competence set forth in the tables of the appropriate sections in part A of the STCW Code (incorporated by reference, see § 10.103 of this part);

(iii) The method for demonstrating competence to be used in determining that the tasks or skills have been performed properly, with reference to the standards of competence set forth in the tables of competence in the appropriate sections in part A of the STCW Code;

(iv) A place for a qualified instructor to indicate by his or her initials that the applicant has received training in the proper performance of the task or skill;

(v) A place for a qualified assessor (QA) to indicate by his or her initials that the applicant has successfully completed a practical demonstration and has proved competent in the task or skill under the criteria, when assessment of competence is to be documented in the record books;

(vi) The printed name of each qualified instructor, including any MMC endorsements held, and the instructor's signature; and

(vii) The printed name of each qualified assessor, when any assessment of competence is recorded, including any MMC endorsement, license, or document held by the assessor, and the assessor's signature confirming that his or her initials certify that he or she has witnessed the practical demonstration of a particular task or skill by the applicant.

(2) The TRB referred to in paragraph (b) of this section may be maintained electronically, provided the electronic record meets Coast Guard-accepted standards for accuracy, integrity, and availability.

(3) The Coast Guard may accept other forms of documentation as meeting the requirements to maintain the training-record book.

(c) *Use of towing officer assessment records (TOARs).* (1) Each applicant for an endorsement as master or mate (pilot) of towing vessels, and each master or mate of self-propelled vessels of 200 GRT/500 GT or more, seeking an endorsement for towing vessels, must complete a TOAR approved by the Coast Guard that contains at least the following:

(i) Identification of the applicant, including his or her full name, and reference number;

(ii) Objectives of the training and assessment;

(iii) Tasks to perform or skills to demonstrate;

(iv) Criteria to use in determining that the tasks or skills have been performed properly;

(v) A means for a designated examiner (DE) to attest that the applicant has successfully completed a practical demonstration and has proved proficient in the task or skill under the criteria; and

(vi) Identification of each DE by his or her full name and reference number, job title, ship name and official number, and serial number of the MMC, license, or document held, and printed name and signature confirming that his or her initials certify that he or she has witnessed the practical demonstration of a particular task or skill by the applicant.

§ 10.405 Qualification as qualified assessor (QA) and designated examiner (DE).

(a) To become a QA, an applicant must have documentary evidence to establish:

(1) Experience, training, or instruction in assessment techniques;

(2) Qualifications in the task for which the assessment is being conducted; and

(3) Possession of the level of endorsement, or other professional credential, which provides proof that he or she has attained a level of qualification equal or superior to the relevant level of knowledge, skills, and abilities described in the training objectives.

(b) To become a DE for towing officer assessment records (TOARs), an applicant must have documentary evidence to establish:

(1) Experience, training, or instruction in assessment techniques on towing vessels;

(2) Qualifications on towing vessels in the task for which the assessment is being conducted; and

(3) Possession of the level of endorsement on towing vessels, or other professional credential, which provides proof that he or she has attained a level of qualification equal or superior to the relevant level of knowledge, skills, and abilities described in the training objectives.

(c) Documentary evidence may be in the form of performance evaluations, which include an evaluation of effectiveness in on-the-job organization and delivery of training, and/or a certificate of successful completion from a ''train-the-trainer'' course. A ''train-the-trainer'' course must be based on the International Maritime Organization's (IMO) model course 6.09 (Training Course for Instructors), or on another Coast Guard-accepted syllabus.

§ 10.406 Approved courses.

The NMC maintains the list of training organizations and the approvals given to the training they offer. This information is available online at *www.uscg.mil/nmc.*

§ 10.407 Coast Guard-approved training program requirements for STCW endorsements.

Training programs approved to qualify a mariner to hold an STCW endorsement must meet the same standards as those found in §§ 10.402 and 10.403 of this subpart.

§ 10.408 Coast Guard-accepted training other than approved courses and programs.

(a) When the training and assessment of competence required by this part are not subject to Coast Guard approval under §§ 10.402 and 10.407 of this subpart, but are used to qualify a mariner to hold an endorsement, the offeror of the course or program must ensure that such training and assessment meets the same standards as those found in §§ 10.402 and 10.403 of this subpart.

(b) The Coast Guard will accept courses approved and monitored by a Coast Guard-accepted Quality Standard System (QSS) organization. The Coast Guard maintains a list of training organizations conducting accepted training and that are independently monitored by a Coast Guard-accepted QSS organization. The Coast Guard-accepted QSS organization must comply with the following requirements:

(1) Submit a certificate of acceptance of training to the Coast Guard;

(2) Submit an updated certificate of acceptance to the Coast Guard if the terms of acceptance have been changed; and

(3) Sign each certificate to the training organization owner or operator, or its authorized representative(s), stating that the training fully complies with the requirements of this section, and identifying the Coast Guard-accepted QSS organization being used for independent monitoring.

(c) The training must be audited periodically in accordance with the requirements of § 10.409(e)(7) of this

subpart. If the Coast Guard determines, on the basis of observations or conclusions either of its own or by the Coast Guard-accepted QSS organization, that the particular training does not satisfy one or more of the conditions described in paragraph (a) of this section:

(1) The Coast Guard or Coast Guard-accepted QSS organization will so notify the offeror of the training by letter, enclosing a report of the observations and conclusions;

(2) The offeror may, within a period of time specified in the notice, either appeal the observations or conclusions to the Commandant (CG–543) or bring the training into compliance; and

(3) If the appeal is denied—or if the deficiency is not corrected in the allotted time, or within any additional time period judged by the Coast Guard to be appropriate, considering progress toward compliance—the Coast Guard will remove the training from the list maintained under paragraph (b) of this section until it can verify full compliance. The Coast Guard may deny applications for endorsements based, in whole or in part, on training not on the list, until additional training or assessment is documented.

§ 10.409 Coast Guard-accepted Quality Standard System (QSS) organizations.

(a) Organizations wishing to serve as a Coast Guard-accepted QSS organization, to accept and monitor training on behalf of the Coast Guard, should apply to the National Maritime Center. An organization submitting an application may not act as a Coast Guard-accepted QSS organization until it has received its letter of acceptance.

(b) *Validity of acceptance.* Organizations meeting the requirements in paragraph (e) of this section will be issued a letter of acceptance valid for a maximum period of 5 years from the date of issuance.

(c) An organization wishing to become a Coast Guard-accepted QSS organization must have processes for reviewing, accepting, and monitoring training that are equal to the Coast Guard's course approval and oversight processes in §§ 10.402 through 10.410 of this subpart.

(d) Each person conducting evaluation and monitoring of the training must be knowledgeable about the subjects being evaluated or monitored and about the national and international requirements that apply to the training, and must not be involved in the training and assessment of students.

(e) The documentation submitted to the Coast Guard must contain the information listed below. An organization approved as a recognized classification society in accordance with 46 CFR part 8, subpart B, need not present evidence of compliance with paragraphs (e)(1) and (e)(8) of this section.

(1) Identification of the organization: Name of the organization, address, contact information, and organizational structure (including the QSS department).

(2) Scope of approval: Training and assessment the organization wishes to accept and monitor.

(3) Background of the organization: Historical information outlining the organization's experience reviewing and accepting training and/or assessment activities.

(4) Staffing and support infrastructure, including:

(i) Names and qualifications of the individuals who will be involved in the review, acceptance, and monitoring of training and assessment;

(ii) Description of the training given to individuals who will be conducting review, acceptance, and monitoring activities; and

(iii) Technical and support resources within the organization that support the review, acceptance, and monitoring activities.

(5) Submission guidelines: Information for client organizations to submit courses for review and acceptance, including criteria for course design, instructor/assessor qualifications, syllabi, equipment, and facilities.

(6) *Review and acceptance procedures.* (i) Descriptions of the methods of evaluation of the physical, administrative, and infrastructure support aspects of client organizations;

(ii) Descriptions of the methods of evaluation of the instructors, designated examiners of a client organization and the maintenance of their records;

(iii) Descriptions of format for accepting training material;

(iv) Descriptions of the methods by which the course acceptance process responds to the client organization modifications to the training curriculum, changes to instructors or examiners, changes to the infrastructure support; and

(v) Descriptions of the renewal procedures.

(7) Audit procedures: Description of the methods for auditing accepted courses. Client organizations must be audited once in a 5-year period.

(8) Quality commitment: Provide evidence of having a quality management system that includes the following elements:

(i) A documented statement of a quality policy and quality objectives;

(ii) A quality manual;

(iii) Documented procedures and records; and

(iv) Documents, including records, determined by the organization to be necessary to ensure the effective planning, operation, and control of its processes.

(f) Coast Guard-accepted QSS organizations must notify the NMC of the training they have accepted within 14 days of the acceptance date. The notification must include the name and address of the institution, the course title and the requirement the course meets, and a one-paragraph description of the course's content.

(g) *Audits.* (1) A Coast Guard-accepted QSS organization must conduct internal audits at least once in 5 years with a minimum of 2 years between reviews. Results of the internal audits must be available upon request to the Coast Guard within 60 days of completion.

(2) Each Coast Guard-accepted QSS organization may be audited by the Coast Guard at least once every 5 years. The results of the audit will be available to the Coast Guard-accepted QSS organization within 60 days of completion of the audit.

(3) Results of Coast Guard-accepted QSS organizations' audits to client organizations must be available upon request to the Coast Guard within 60 days of completion.

(h) *Disenrollment.* (1) A Coast Guard-accepted QSS organization must give each client organization it serves a 180-day notice of its intention to cease to function as a Coast Guard-accepted QSS organization.

(2) If the Coast Guard determines that a Coast Guard-accepted QSS organization is not meeting its obligations to review, accept, and monitor training and assessment, the NMC will notify the organization in writing and will enclose information about the events that led to this determination. The organization will then have a specified period of time to correct the deficiencies or appeal the conclusions to the Commandant (CG–54). If the organization appeals, and the appeal is denied, or the deficiencies are not corrected within the allotted time, the NMC will withdraw the acceptance of the Coast Guard-accepted QSS organization. The NMC will notify all client organizations affected by this decision so that they may make arrangements to transfer to another Coast Guard-accepted QSS organization or seek NMC approval for their training.

(i) A Coast Guard-accepted QSS organization may not approve courses provided by client organizations.

§ 10.410 Quality Standard System (QSS) requirements.

(a) Providers of Coast Guard-approved courses, programs, training, and Coast Guard-accepted training creditable towards an STCW endorsement must establish and maintain a Quality Standard System (QSS), in accordance with Regulation I/8 of the STCW Convention (incorporated by reference, see § 10.103 of this part).

(b) The QSS must be monitored by the Coast Guard or monitored through a third party that is designated as a Coast Guard-accepted QSS organization.

(c) The Coast Guard-monitored QSS must:

(1) Have a documented quality policy and quality objectives that align with the commitment by the training institution to achieve its missions and goals;

(2) Maintain a manual that documents the objectives, authorities, and responsibilities that are essential controls for the implementation of the QSS, including:

(i) The core procedures required to meet the missions and goals of the institution;

(ii) The documents necessary for effective design, planning, operation, and control for the delivery of courses meeting the regulatory requirements;

(iii) The filing and archiving of records so they are retrievable and legible;

(iv) Action taken to stop recurrence of system, process, and product nonconformity; and

(v) Auditing, reviewing, and improving the performance of the training management system; and

(3) Arrange for a Coast Guard audit to be conducted twice in a 5-year period.

(d) Documentation from a National Academic Accreditation body may be accepted by the Coast Guard as meeting one or more of the requirements listed in paragraph (c) of this section. The documentation must be readily available for inspection upon request.

(e) The Coast Guard will accept documentation from a training institution certified under a national or international Quality Management System Standard as meeting one or more of the requirements listed in paragraph (c) of this section. The documentation must be readily available for inspection upon request.

(f) Coast Guard-approved courses, programs, and training creditable towards an STCW endorsement approved prior to July 1, 2013 must meet the requirements of this section at the next renewal.

§ 10.411 Simulator performance standards.

Simulators used in assessment of competence must meet the appropriate performance standards set out in Section A–I/12 of the STCW Code (incorporated by reference, see § 10.103 of this part). However, a simulator installed or brought into use before February 1, 2002, need not meet those standards if it fulfills the objectives of the assessment of competence or demonstration of proficiency.

§ 10.412 Distance and e-learning.

The Coast Guard may allow the training of mariners by means of methods of distance learning and e-learning in accordance with the standards of training and assessment set forth in section A–I/6 (Training and assessment) of the STCW Code (incorporated by reference, see § 10.103 of this part).

30. Revise part 11 to read as follows:

PART 11—REQUIREMENTS FOR OFFICER ENDORSEMENTS

Subpart A—General

Sec.

11.101 Purpose of regulations.
11.102 Incorporation by reference.
11.107 Paperwork approval.

Subpart B—General Requirements for Officer Endorsements

11.201 General requirements for domestic and STCW officer endorsements.
11.211 Creditable service and equivalents for domestic and STCW officer endorsements.
11.217 Examination procedures and denial of officer endorsements.

Subpart C—STCW Officer Endorsements

11.301 Requirements for STCW officer endorsements.
11.303 STCW deck officer endorsements.
11.305 Requirements to qualify for an STCW endorsement as master on vessels of 1,600 GRT/3,000 GT or more (management level).
11.307 Requirements to qualify for an STCW endorsement as chief mate on vessels of 1,600 GRT/3,000 GT or more (management level).
11.309 Requirements to qualify for an STCW endorsement as Officer in Charge of a Navigational Watch (OICNW) of vessels of 200 GRT/500 GT or more (operational level).
11.311 Requirements to qualify for an STCW endorsement as master of vessels of 200 GRT/500 GT or more and less than 1,600 GRT/3,000 GT (management level).
11.313 Requirements to qualify for an STCW endorsement as chief mate of vessels of 200 GRT/500 GT or more and less than 1,600 GRT/3,000 GT (management level).
11.315 Requirements to qualify for an STCW endorsement as master of vessels of less than 200 GRT/500 GT (management level).
11.317 Requirements to qualify for an STCW endorsement as master of vessels of less than 200 GRT/500 GT limited to near-coastal waters (management level).
11.319 Requirements to qualify for an STCW endorsement as Officer in Charge of a Navigational Watch (OICNW) of vessels of less than 200 GRT/500 GT (operational level).
11.321 Requirements to qualify for an STCW endorsement as Officer in Charge of a Navigational Watch (OICNW) of vessels of less than 200 GRT/500 GT limited to near-coastal waters (operational level).
11.323 STCW engineer officer endorsements.
11.325 Requirements to qualify for an STCW endorsement as chief engineer officer on vessels powered by main propulsion machinery of 3,000 kW/4,000 HP propulsion power or more (management level).
11.327 Requirements to qualify for an STCW endorsement as second engineer officer on vessels powered by main propulsion machinery of 3,000kW/4,000HP propulsion power or more (management level).
11.329 Requirements to qualify for an STCW endorsement as Officer in Charge of an Engineering Watch (OICEW) in a manned engineroom or designated duty engineer in a periodically unmanned engineroom on vessels powered by main propulsion machinery of 750 kW/1,000 HP propulsion power or more (operational level).
11.331 Requirements to qualify for an STCW endorsement as chief engineer officer on vessels powered by main propulsion machinery of between 750 kW/1,000 HP and 3,000 kW/4,000 HP propulsion power (management level).
11.333 Requirements to qualify for an STCW endorsement as second engineer officer on vessels powered by main propulsion machinery of between 750kW/1,000HP and 3,000 kW/4,000 HP propulsion power (management level).
11.335 Requirements to qualify for an STCW endorsement as an electro-technical officer on vessels powered by main propulsion machinery of 750 kW/1,000 HP or more (operational level).

Subpart D—Professional Requirements for Domestic Deck Officer Endorsements

11.401 Ocean and near-coastal domestic officer endorsements.
11.402 Tonnage requirements for domestic ocean or near-coastal endorsements for vessels of 1,600 GRT/3,000 GT or more.
11.403 Structure of domestic deck officer endorsements.
11.404 Service requirements for domestic master of ocean or near-coastal self-propelled vessels of unlimited tonnage.
11.405 Service requirements for domestic chief mate of ocean or near-coastal self-propelled vessels of unlimited tonnage.

11.406 Service requirements for domestic second mate of ocean or near-coastal self-propelled vessels of unlimited tonnage.
11.407 Service requirements for domestic third mate of ocean or near-coastal self-propelled vessels of unlimited tonnage.
11.410 Requirements for domestic deck officer endorsements for vessels of less than 1,600 GRT/3,000 GT.
11.412 Service requirements for domestic master of ocean or near-coastal self-propelled vessels of less than 1,600 GRT/3,000 GT.
11.414 Service requirements for domestic mate of ocean self-propelled vessels of less than 1,600 GRT/3,000 GT.
11.416 Service requirements for domestic mate of near-coastal self-propelled vessels of less than 1,600 GRT/3,000 GT.
11.418 Service requirements for domestic master of ocean or near-coastal self-propelled vessels of less than 500 GRT.
11.420 Service requirements for domestic mate of ocean self-propelled vessels of less than 500 GRT.
11.421 Service requirements for domestic mate of near-coastal self-propelled vessels of less than 500 GRT.
11.422 Tonnage limitations and qualifying requirements for domestic endorsements as master or mate of vessels of less than 200 GRT.
11.424 Requirements for domestic master of ocean self-propelled vessels of less than 200 GRT.
11.426 Requirements for domestic master of self-propelled seagoing vessels of less than 200 GRT limited to domestic voyages upon near-coastal waters.
11.427 Requirements for domestic mate of self-propelled seagoing vessels of less than 200 GRT limited to domestic voyages upon near-coastal waters.
11.428 Requirements for domestic master of self-propelled, seagoing vessels of less than 100 GRT limited to domestic voyages upon near-coastal waters.
11.429 Requirements for a domestic limited master of self-propelled, seagoing vessels of less than 100 GRT limited to domestic voyages upon near-coastal waters.
11.430 Endorsements for the Great Lakes and inland waters.
11.431 Tonnage requirements for Great Lakes and inland domestic endorsements for vessels of 1,600 GRT/3,000 GT or more.
11.433 Requirements for domestic master of Great Lakes and inland self-propelled vessels of unlimited tonnage.
11.435 Requirements for domestic master of inland self-propelled vessels of unlimited tonnage.
11.437 Requirements for domestic mate of Great Lakes and inland self-propelled vessels of unlimited tonnage.
11.442 Requirements for domestic master of Great Lakes and inland self-propelled vessels of less than 1,600 GRT/3,000 GT.
11.444 Requirements for domestic mate of Great lakes and inland self-propelled vessels of less than 1,600 GRT/3,000 GT.
11.446 Requirements for domestic master of Great Lakes and inland self-propelled vessels of less than 500 GRT.
11.448 Requirements for domestic mate of Great Lakes and inland self-propelled vessels of less than 500 GRT.
11.450 Tonnage limitations and qualifying requirements for domestic endorsements as master or mate of Great Lakes and inland vessels of less than 200 GRT.
11.452 Requirements for domestic master of Great Lakes and inland self-propelled vessels of less than 200 GRT/500 GT.
11.454 Requirements for domestic mate of Great Lakes and inland self-propelled vessels of less than 200 GRT/500 GT.
11.455 Requirements for domestic master of Great Lakes and inland self-propelled vessels of less than 100 GRT.
11.456 Requirements for domestic limited master of Great Lakes and inland self-propelled vessels of less than 100 GRT.
11.457 Requirements for domestic master of inland self-propelled vessels of less than 100 GRT.
11.459 Requirements for domestic master or mate of rivers.
11.462 Endorsements for domestic master or mate of uninspected fishing industry vessels.
11.463 General requirements for domestic endorsements as master, mate (pilot), and apprentice mate (steersman) of towing vessels.
11.464 Requirements for domestic endorsements as master of towing vessels.
11.465 Requirements for domestic endorsements as mate (pilot) of towing vessels.
11.466 Requirements for domestic endorsements as apprentice mate (steersman) of towing vessels.
11.467 Requirements for a domestic endorsement as operator of uninspected passenger vessels of less than 100 GRT.
11.468 Domestic officer endorsements for mobile offshore drilling units (MODUs).
11.470 Domestic officer endorsements as offshore installation manager.
11.472 Domestic officer endorsements as barge supervisor.
11.474 Domestic officer endorsements as ballast control operator.
11.480 Radar observer.
11.482 Assistance towing.
11.491 Domestic officer endorsements for service on offshore supply vessels.
11.493 Master (OSV).
11.495 Chief Mate (OSV).
11.497 Mate (OSV).

Subpart E—Professional Requirements for Domestic Engineer Officer Endorsements

11.501 Grades and types of domestic engineer endorsements issued.
11.502 General requirements for domestic engineer endorsements.
11.503 Propulsion power limitations for domestic endorsements.
11.504 Application of deck service for domestic limited engineer endorsements.
11.505 Domestic engineer officer endorsements.
11.510 Service requirements for domestic endorsement as chief engineer of steam, motor, and/or gas turbine-propelled vessels.
11.512 Service requirements for domestic endorsement as first assistant engineer of steam, motor, and/or gas turbine-propelled vessels.
11.514 Service requirements for domestic endorsement as second assistant engineer of steam, motor, and/or gas turbine-propelled vessels.
11.516 Service requirements for domestic endorsement as third assistant engineer of steam, motor, and/or gas turbine-propelled vessels.
11.518 Service requirements for domestic endorsement as chief engineer (limited oceans) of steam, motor, and/or gas turbine-propelled vessels.
11.520 Service requirements for domestic endorsement as chief engineer (limited near-coastal) of steam, motor, and/or gas turbine-propelled vessels.
11.522 Service requirements for domestic endorsement as assistant engineer (limited oceans) of steam, motor, and/or gas turbine-propelled vessels.
11.524 Service requirements for domestic endorsement as designated duty engineer of steam, motor, and/or gas turbine-propelled vessels.
11.530 Endorsements for domestic engineers of uninspected fishing industry vessels.
11.540 Endorsements for domestic engineers of mobile offshore drilling units (MODU).
11.542 Endorsement as domestic chief engineer (MODU).
11.544 Endorsement as domestic assistant engineer (MODU).
11.551 Endorsements for service on offshore supply vessels.
11.553 Chief engineer (OSV).
11.555 Assistant engineer (OSV).

Subpart F—Credentialing of Radio Officers

11.601 Applicability.
11.603 Requirements for radio officers' endorsements.
11.604 Requirements for an STCW endorsement for Global Maritime Distress and Safety System (GMDSS) radio operators.

Subpart G—Professional Requirements for Pilots

11.701 Scope of pilot endorsements.
11.703 Service requirements.
11.705 Route familiarization requirements.
11.707 Examination requirements.
11.709 Annual physical examination requirements.
11.711 Tonnage requirements.
11.713 Requirements for maintaining current knowledge of waters to be navigated.

Subpart H—Registration of Staff Officers and Miscellaneous Endorsements

11.801 Applicability.
11.805 General requirements.
11.807 Experience requirements for registry.
11.811 Requirements to qualify for an STCW endorsement as vessel security officer.
11.821 High-speed craft type rating.

Subpart I—Subjects of Examinations

11.901 General provisions.

11.903 Officer endorsements requiring examinations.
11.910 Subjects for deck officer endorsements.
11.920 Subjects for MODU endorsements.
11.950 Examination subjects for engineer officer endorsements.

Subpart J—Recognition of Other Parties' STCW certificates

11.1001 Purpose of rules.
11.1003 General requirements.
11.1005 Employer application requirements.
11.1007 Basis for denial.
11.1009 Restrictions.

Subpart K—Officers on a Passenger Ship When on an International Voyage

11.1101 Purpose of rules.
11.1103 Definitions.
11.1105 General requirements for officer endorsements.

Authority: 14 U.S.C. 633; 31 U.S.C. 9701; 46 U.S.C. 2101, 2103, and 2110; 46 U.S.C. chapter 71; 46 U.S.C. 7502, 7505, 7701, 8906, and 70105; Executive Order 10173; Department of Homeland Security Delegation No. 0170.1. Section 11.107 is also issued under the authority of 44 U.S.C. 3507.

Subpart A—General

§ 11.101 Purpose of regulations.

(a) The purpose of this part is to provide:

(1) A means of determining the qualifications an applicant must possess to be eligible for an officer endorsement as a staff officer, deck officer, engineer officer, pilot, or radio officer on merchant vessels, or for an endorsement to operate uninspected passenger vessels; and

(2) A means of determining that an applicant is competent to serve as a master, chief mate, officer in charge of a navigational watch, chief engineer officer, second engineer officer (first assistant engineer), officer in charge of an engineering watch, designated duty engineer, or Global Maritime Distress and Safety System (GMDSS) radio operator, in accordance with the provisions of the International Convention on Standards of Training, Certification and Watchkeeping for Seafarers, 1978, as amended (the STCW Convention or STCW), and other laws, and to receive the appropriate endorsement as required by STCW.

(b) With few exceptions, these regulations do not specify or restrict officer endorsements to particular types of service such as tankships, freight vessels, or passenger vessels. However, each officer credentialed under this part must become familiar with the relevant characteristics of a vessel prior to assuming their duties as required in the provisions of § 15.405 of this subchapter.

(c) The regulations in subpart C of this part that prescribed the requirements applicable to approved training courses, training for a particular officer endorsement, and training and assessment associated with meeting the standards of competence established by the STCW Convention have been moved to 46 CFR, part 10, subpart C.

§ 11.102 Incorporation by reference.

(a) Certain material is incorporated by reference into this part with the approval of the Director of the Federal Register under 5 U.S.C. 552(a) and 1 CFR part 51. To enforce any edition other than that specified in this section, the Coast Guard must publish a notice of change in the **Federal Register** and the material must be available to the public. All approved material is available for inspection at the National Archives and Records Administration (NARA). For information on the availability of this material at NARA, call 202–741–6030 or go to *http://www.archives.gov/federal_register/code_of_federal_regulations/ibr_locations.html.* Also, it is available for inspection at the Coast Guard, Office of Operating and Environmental Standards (CG–5221), 2100 2nd St., SW., Stop 7126, Washington, DC 20593–7126, 202–372–1405 and is available from the sources indicated in this section.

(b) International Maritime Organization (IMO), 4 Albert Embankment, London SE1 7SR, England.

(1) The International Convention on Standards of Training, Certification and Watchkeeping for Seafarers, 1978, as amended (the STCW Convention or the STCW), incorporation by reference approved for §§ 11.201, 11.426, 11.427, 11.428, 11.429, 11.1101, 11.1105, and 11.1117.

(2) The Seafarers' Training, Certification and Watchkeeping Code, as amended (the STCW Code), incorporation by reference approved for §§ 11.201, 11.301, 11.305, 11.309, 11.311, 11.313, 11.315, 11.317, 11.319, 11.321, 11.325, 11.327, 11.329, 11.333, 11.335, 11.901, and 11.1105.

(3) The International Convention for the Safety of Life at Sea, 1974 (SOLAS), incorporation by reference approved for § 11.601.

§ 11.107 Paperwork approval.

(a) This section lists the control numbers assigned by the Office of Management and Budget (OMB) under the Paperwork Reduction Act of 1980 (Pub. L. 96–511) for the reporting and recordkeeping requirements in this part.

(b) The following control numbers have been assigned to the sections indicated:

(1) OMB 1625–0040–46 CFR 11.201, 11.202, 11.205, 11.470, 11.472, 11.474, 11.542, and 11.544.

(2) OMB 1625–028–46 CFR 11.480.

Subpart B—General Requirements for Officer Endorsements

§ 11.201 General requirements for domestic and STCW officer endorsements.

(a) *General.* In addition to the requirements of part 10 of this subchapter, the applicant for an officer endorsement, whether original, renewal, duplicate, or raise of grade, must establish to the satisfaction of the Coast Guard that he or she possesses all the qualifications necessary (including but not limited to age, experience, character, physical health, citizenship, approved training, passage of a professional examination, a test for dangerous drugs), before the Coast Guard will issue him or her a merchant mariner credential (MMC).

(b) *English language requirements.* Except as provided in § 11.467(h) of this part, an applicant for an officer endorsement must demonstrate an ability to speak and understand English as found in the navigation rules, aids to navigation publications, emergency equipment instructions, machinery instructions, and radiotelephone communications instructions.

(c) *Experience and Service.* (1) Applicants for officer endorsements should refer to § 10.232 of this subchapter for information regarding requirements for documentation and proof of sea service.

(2) An applicant for an officer endorsement must have at least 3 months of required service on vessels of appropriate tonnage or horsepower within the 3 years immediately preceding the date of application.

(3) No original officer or STCW endorsement may be issued to any naturalized citizen based on less experience in any grade or capacity than would have been required of a citizen of the United States by birth.

(4) Experience and service acquired on foreign vessels is creditable for establishing eligibility for an officer or STCW endorsement, subject to evaluation by the Coast Guard to determine that it is a fair and reasonable equivalent to service acquired on merchant vessels of the United States, with respect to grade, tonnage, horsepower, waters, and operating conditions. An applicant who has obtained qualifying experience on foreign vessels must submit satisfactory

documentary evidence of such service (including any necessary translation into English) in accordance with § 10.232 of this subchapter.

(5) No applicant for an original officer endorsement who is a naturalized citizen and who has obtained experience on foreign vessels will be given an original officer endorsement in a grade higher than that upon which he or she has actually served while acting under the authority of a foreign credential.

(6) Experience acquired while the applicant was less than 16 years of age is generally not creditable. Compelling circumstances and unique experiences acquired before the applicant reaches 16 years of age will be evaluated on a case-by-case basis.

(d) *Citizenship.* No officer endorsement may be issued to any person who is not a citizen of the United States with the exception of operators of uninspected passenger vessels that are not documented under the laws of the United States.

(e) *Age.* Except as specified in this paragraph, no officer endorsement may be issued to a person who has not attained the age of 21 years. The required evidence of age may be established using any of the items submitted to establish citizenship set out in 49 CFR 1572.17:

(1) An endorsement may be granted to an applicant who has reached the age of 19 years as:

(i) Master of near-coastal, Great Lakes and inland, or river vessels of 25–200 GRT/500 GT;

(ii) Third mate;

(iii) Third assistant engineer;

(iv) Mate of vessels of between 200 GRT/500 GT and 1,600 GRT/3,000 GT;

(v) Ballast control operator (BCO);

(vi) Assistant engineer (MODU);

(vii) Assistant engineer of fishing industry vessels;

(viii) Mate (pilot) of towing vessels;

(ix) Radio officer;

(x) Assistant engineer (limited); or

(xi) Designated duty engineer of vessels of less than 4,000 HP/3,000 kW.

(2) An endorsement may be granted to an applicant who has reached the age of 18 years as:

(i) Limited master of near-coastal vessels of less than 100 GRT;

(ii) Limited master of Great Lakes and inland vessels of less than 100 GRT;

(iii) Mate of Great Lakes and inland vessels of 25–200 GRT/500 GT;

(iv) Mate of near-coastal vessels of 25–200 GRT/500 GT;

(v) Operator of uninspected passenger vessels (OUPV);

(vi) Designated duty engineer of vessels of less than 1,000 HP/750 kW; or

(vii) Apprentice mate (steersman) of towing vessels.

(f) *Physical examination.* (1) Persons serving or intending to serve in the merchant marine service are encouraged to take the earliest opportunity to ascertain, through examination, whether their visual acuity, color vision, hearing, and general physical condition, are such as to qualify them for service in that profession. Any physical impairment or medical condition that would render an applicant incompetent to perform the ordinary duties required of an officer is cause for denial of an officer endorsement.

(2) Applications for an original officer endorsement, raises of grade, and extensions of route, must be current and up to date with respect to service and the physical examination, as appropriate. Physical examinations and applications are valid for 12 months from the date the application is approved.

(g) *Character check.* (1) An individual may apply for an original officer endorsement, or officer or STCW endorsement of a different type, while on probation as a result of administrative action under part 5 of this chapter. The offense for which the applicant was placed on probation will be considered in determining his or her fitness to hold the endorsement applied for. An officer or STCW endorsement issued to an applicant on probation will be subject to the same probationary conditions as were imposed against the applicant's other credential. An applicant may not take an examination for an officer or STCW endorsement during any period of time when a suspension without probation or a revocation is effective against the applicant's currently held license, MMD, or MMC, or while an appeal from these actions is pending.

(2) If an original license, certificate of registry, or officer endorsement has been issued, when information about the applicant's habits of life and character is brought to the attention of the Coast Guard, if such information warrants the belief that the applicant cannot be entrusted with the duties and responsibilities of the license, certificate of registry, or officer endorsement issued, or if such information indicates that the application for the license, certificate of registry, or officer endorsement was false or incomplete, the Coast Guard may notify the holder in writing that the license, certificate of registry, or officer endorsement is considered null and void, direct the holder to return the credential to the Coast Guard, and advise the holder that, upon return of the credential, the appeal procedures of § 10.237 of this subchapter apply.

(h) *Firefighting certificate.* Applicants for an original officer endorsement in the following categories must present a certificate of completion from a firefighting course of instruction that has been approved by the Coast Guard. The course must have been completed within 5 years before the date of application for the officer endorsement requested.

(1) Mariners who completed a firefighting course within the previous 5 years must provide evidence of maintaining the standard of competence in accordance with the firefighting requirements for the credential sought.

(2) The following categories must meet the requirements for basic and advanced firefighting in Regulations VI/1 and VI/3 of the STCW Convention and Tables A–VI/1–2 and A–VI/3 of the STCW Code (both incorporated by reference, see § 11.102 of this part):

(i) Domestic officer endorsements as master or mate on seagoing vessels of 200 GRT/500 GT or more;

(ii) All domestic officer endorsements for master or mate (pilot) of towing vessels, except apprentice mate (steersman) of the vessels, on oceans;

(iii) All domestic officer endorsements for MODUs;

(iv) All domestic officer endorsements for engineers;

(v) All domestic officer endorsements for OSVs; and

(vi) All STCW officer endorsements.

(3) The following categories must meet the requirements for basic firefighting in Regulation VI/1 of the STCW Convention and Table A–VI/1–2 of the STCW Code (both incorporated by reference, see § 11.102 of this part):

(i) Officer endorsement as master on vessels of less than 200 GRT/500 GT in ocean service; and

(ii) All officer endorsements for master or mate (pilot) of towing vessels, except utility towing and apprentice mate (steersman) of towing vessels, in all services except oceans.

(i) *First aid and cardiopulmonary resuscitation (CPR) course certificates.* All applicants for an original officer endorsement, except as provided in §§ 11.429, 11.456, and 11.467 of this part, must present to the Coast Guard:

(1) Evidence of continued competency in STCW basic safety training or a certificate indicating completion of a first-aid course not more than 1 year from the date of application from:

(i) The American National Red Cross Standard First Aid course or American National Red Cross Community First Aid & Safety course; or

(ii) A Coast Guard-approved first-aid course; and

(2) A currently valid certificate of completion of a CPR course from either:

(i) The American National Red Cross;

(ii) The American Heart Association; or

(iii) A Coast Guard-approved CPR course.

(j) *Professional Examination.* (1) When the Coast Guard finds the applicant's experience and training to be satisfactory, and the applicant is eligible in all other respects, the Coast Guard will authorize examination in accordance with the following requirements:

(i) Except for an endorsement required by the STCW Convention, any applicant for a deck or engineer officer endorsement limited to vessels less than 200 GRT/500 GT, or an officer endorsement limited to uninspected fishing industry vessels, may request an orally assisted examination instead of any written or other textual examination. If there are textual questions that the applicant has difficulty reading and understanding, the Coast Guard will offer the orally assisted examination. Each officer endorsement based on an orally assisted examination is limited to the specific route and type of vessel upon which the applicant obtained the majority of service.

(ii) The general instructions for administration of examinations and the lists of subjects for all officer endorsements appear in subpart I of this part. The Coast Guard will place in the applicant's file a record indicating the subjects covered.

(iii) An applicant enrolled in a comprehensively approved program of training, service, and assessment may be authorized for an examination not more than 3 months prior to completion of the program provided that all applicable sea service requirements are completed prior to the examination.

(iv) The examination, whether administered orally or by other means, must be conducted only in the English language.

(2) When the application has been approved for examination, the applicant should take the required examination as soon as practicable; however, approved examinations are valid for 1 year.

(3) An examination is not required for a staff officer or radio officer endorsement.

(k) *Radar observer.* Applicants for an endorsement as radar observer must present a certificate of completion from a radar observer course as required by § 11.480 of this part.

(l) *Restrictions.* The Coast Guard may modify the service and examination requirements in this part to satisfy the unique qualification requirements of an applicant or distinct group of mariners. The Coast Guard may also lower the age requirement for OUPV applicants. The authority granted by an officer endorsement will be restricted to reflect any modifications made under the authority of this paragraph. These restrictions may not be removed without the approval of the Coast Guard.

§ 11.211 Creditable service and equivalents for domestic and STCW officer endorsements.

(a) Applicants for officer endorsements should refer to § 10.232 of this subchapter for information regarding requirements for documentation and proof of sea service.

(b) Service toward an oceans, near-coastal, or STCW endorsement will be credited as follows:

(1) Service on the Great Lakes will be credited on a day-for-day basis.

(2) Service on inland waters, other than Great Lakes, that are navigable waters of the United States, may be substituted for up to 50 percent of the total required service.

(c) *Service on mobile offshore drilling units.* (1) MODU service is creditable for raise of grade of officer endorsement. Evidence of 1 year of service on MODUs as mate or equivalent while holding an officer endorsement or license as third mate, or as engineering officer of the watch or equivalent while holding an officer endorsement or license as third assistant engineer, is acceptable for a raise of grade to second mate or second assistant engineer, respectively. However, any subsequent raises of grade of unlimited, non-restricted officer licenses or endorsements must include a minimum of 6 months of service on conventional vessels.

(2) Service on dynamically positioned MODUs, maintaining station by means of dynamic positioning, may be credited as service on conventional vessels for any raise in grade; however, time more than 8 hours each day will not be credited.

(3) A day of MODU service must be a minimum of 4 hours, and no additional credit will be granted for service periods of more than 8 hours.

(4) Creditable MODU service excludes time spent ashore due to crew rotation.

(d) *Service on ATBs and ITBs.* Service on Articulated Tug Barge (ATB) or Dual Mode Integrated Tug Barge (ITB) units is creditable for an original deck officer endorsement or raise of grade of any deck officer endorsement. Service on an ATB or Dual Mode ITB with an aggregate tonnage of 1,600 GRT/3,000 GT or more is creditable on a two-for-one basis (2 days experience equals 1 day of creditable service) for up to 50 percent of the total service on vessels of 1,600 GRT/3,000 GT or more required for an unlimited officer endorsement. The remaining required service on vessels of more than 1,600 GRT/3,000 GT must be obtained on conventional vessels or Push Mode ITBs.

(e) Individuals obtaining sea service as part of an approved training curriculum pursuant to either § 11.407(a)(2) or § 11.516(a)(3) must do so in the capacity of cadet (deck) or cadet (engine), as appropriate, notwithstanding any other rating endorsements the individual may hold or any other capacity in which the individual may have served.

(f) *Other experience.* Other experience in a marine-related area, other than at sea, or sea service performed on unique vessels, will be evaluated by the Coast Guard for a determination of equivalence to traditional service.

§ 11.217 Examination procedures and denial of officer endorsements.

(a) The examination fee set out in Table 10.219(a) in § 10.219 of this subchapter must be paid before the applicant may take the first examination section. If an applicant fails three or more sections of the examination, a complete re-examination must be taken. On the subsequent exam, if the applicant again fails three or more sections, at least 3 months must lapse before another complete examination is attempted, and a new examination fee is required. If an applicant fails one or two sections of an examination, the applicant may be retested twice on these sections during the next 3 months. If the applicant does not successfully complete these sections within the 3-month period, a complete re-examination must be taken after a lapse of at least 3 months from the date of the last retest, and a new examination fee is required. The 3-month retest period may be extended by the Coast Guard if the applicant presents evidence documenting sea time that prevented the taking of a retest during the 3-month period. The retest period may not be extended beyond 7 months from the initial examination. All examinations and retests must be completed within 1 year of approval for examination.

(b) If the Coast Guard refuses to grant an applicant the endorsement applied for due to the applicant's failure to pass a required examination, the Coast Guard will provide the applicant with a written statement setting forth the portions of the examination that must be retaken and the date by which the examination must be completed.

Subpart C—STCW Officer Endorsements

§ 11.301 Requirements for STCW officer endorsements.

(a) *Standard of competence.* (1) The Coast Guard will accept one or more methods to demonstrate meeting the standard of competence in this subpart. The Coast Guard will accept the following as evidence for each one of the methods required in Column 3—Methods for demonstrating competence—of the Tables of Competence in the STCW Code (incorporated by reference, see § 11.102 of this part):

(i) In-service experience: documentation of successful completion of assessments, approved or accepted by the Coast Guard, and signed by a designated examiner (DE) or seafarer with a higher credential—deck or engineering—as appropriate, than the assessment related to the credential sought by the applicant.

(ii) Training ship experience: documentation of successful completion of an approved training program involving formal training and assessment onboard a training ship.

(iii) Simulator training: documentation of successful completion of training and assessment from a Coast Guard-approved course involving maritime simulation.

(iv) Laboratory equipment training: documentation of successful completion of training and assessments from an approved training course or facility.

(v) Practical training or instruction:

(A) Documentation of successful completion of assessment as part of a structured/formal training or instruction provided by an organization or company as part of an accepted safety or quality management system; or

(B) Documentation of successful completion of an approved training course from a school or facility.

(vi) Specialist training: documentation of successful completion of assessment as part of a company training or specialized training provided by a maritime or equipment specialist.

(vii) Workshop skills training: documentation of successful completion of assessments or completion certificate from an approved training program, school or facility.

(viii) Training program: documentation of successful completion of an approved training program.

(ix) Training on a manned scale ship model: documentation of successful completion of assessment as part of a structured/formal training or instruction provided by an approved training school or facility.

(x) Practical demonstration and practical demonstration of competence: documentation of successful completion of assessments approved or accepted by the Coast Guard.

(xi) Practical test and practical experience: documentation of successful completion of assessments approved or accepted by the Coast Guard.

(xii) Examination: successful completion of a Coast Guard examination.

(xiii) Instruction or course: documentation of successful completion of a course of instruction offered by an approved training school or facility.

(2) Knowledge components may be documented by:

(i) Successful completion of the Coast Guard examination for the associated officer endorsement;

(ii) Successful completion of an approved course; or

(iii) Successful completion of an approved program.

(3) The Coast Guard will publish assessment guidelines that should be used to document assessments that demonstrate meeting the standard of competence, as required by paragraph (a)(1) of this section. Organizations may develop alternative assessment documentation for demonstrations of competence; however, it must be approved by the Coast Guard prior to its use and submittal with an application.

(b) *Basic Safety Training.* (1) Applicants seeking an STCW officer endorsement must provide evidence, with their application, of meeting the standard of competence for basic safety training as described below:

(i) Personal survival techniques as set out in Table A–VI/1–1 of the STCW Code.

(ii) Fire prevention and firefighting as set out in Table A–VI/1–2 of the STCW Code.

(iii) Elementary first aid as set out in Table A–VI/1–3 of the STCW Code.

(iv) Personal safety and social responsibilities as set out in Table A–VI/1–4 of the STCW Code.

(2) Every 5 years seafarers qualified in accordance with paragraph (e) of this section must provide evidence of maintaining the standard of competence for Basic Safety Training.

(3) The Coast Guard will accept onboard training and experience, through evidence of 1 year of sea service within the last 5 years, as meeting the requirements for Basic Safety Training of paragraph (e)(2) of this section for the following areas:

(i) Personal survival techniques as set out in Table A–VI/1–1 of the STCW Code:

(A) Don a lifejacket;

(B) Board a survival craft from the ship, while wearing a lifejacket;

(C) Take initial actions on boarding a lifeboat to enhance chance of survival;

(D) Stream a lifeboat drogue or sea-anchor;

(E) Operate survival craft equipment; and

(F) Operate location devices, including radio equipment.

(ii) Fire prevention and firefighting as set out in Table A–VI/1–2 of the STCW Code:

(A) Use self-contained breathing apparatus; and

(B) Effect a rescue in a smoke-filled space, using an approved smoke-generating device aboard, while wearing a breathing apparatus.

(iii) Elementary first aid as set out in Table A–VI/1–3 of the STCW Code.

(iv) Personal safety and social responsibilities as set out in Table A–VI/1–4 of the STCW Code.

(4) The Coast Guard will only accept evidence of approved assessments conducted ashore as meeting the requirements for Basic Safety Training of paragraph (e)(2) of this section for the following areas:

(i) Personal survival techniques as set out in Table A–VI/1–1 of the STCW Code:

(A) Don and use an immersion suit;

(B) Safely jump from a height into the water;

(C) Right an inverted liferaft while wearing a lifejacket;

(D) Swim while wearing a lifejacket; and

(E) Keep afloat without a lifejacket.

(ii) Fire prevention and firefighting as set out in Table A–VI/1–2 of the STCW Code:

(A) Use various types of portable fire extinguishers;

(B) Extinguish smaller fires, e.g., electrical fires, oil fires, and propane fires;

(C) Extinguish extensive fires with water, using jet and spray nozzles;

(D) Extinguish fires with foam, powder, or any other suitable chemical agent;

(E) Fight fire in smoke-filled enclosed spaces wearing self-contained breathing apparatus;

(F) Extinguish fire with water fog or any other suitable firefighting agent in an accommodation room or simulated engineroom with fire and heavy smoke; and

(G) Extinguish oil fire with fog applicator and spray nozzles, dry chemical powder, or foam applicators.

(5) Applicants who cannot meet the requirement for 1 year of sea service within the last 5 years, as described in paragraph (b)(3) of this section, will be

required to meet the requirements of paragraph (b)(1) of this section.

(c) *Advanced Firefighting.* (1) Applicants seeking an STCW officer endorsement must provide evidence, with their application, of meeting the standard of competence as set out in Table A–VI/3 of the STCW Code. Applicants for an original STCW officer endorsement, who met the requirements of § 11.201(h)(1) of this subpart will be deemed to have met the requirement of this paragraph.

(2) Every 5 years seafarers qualified in accordance with paragraph (1) of this section must provide evidence of maintaining the standard of competence as set out in Table A–VI/3 of the STCW Code.

(3) The Coast Guard will accept onboard training and experience, through evidence of 1 year of sea service within the last 5 years, as meeting the requirements of paragraph (c)(2) of this section for the following areas as set out in Table A–VI/3 of the STCW Code:

(i) Control firefighting operations aboard ships;

(A) Firefighting procedures at sea and in port, with particular emphasis on organization, tactics and command;

(B) Communication and coordination during firefighting operations;

(C) Ventilation control, including smoke extraction;

(D) Control of fuel and electrical systems;

(E) Fire-fighting process hazards (dry distillation, chemical reactions, boiler uptake);

(F) Fire precautions and hazards associated with the storage and handling of materials;

(G) Management and control of injured persons; and

(H) Procedures for coordination with shore-based fire fighters; and

(ii) Inspect and service fire-detection and extinguishing systems and equipment;

(A) Requirements for statutory and classification.

(4) The Coast Guard will only accept evidence of assessments conducted ashore as meeting the requirements of paragraph (c)(2) of this section for the following areas as set out in Table A–VI/3 of the STCW Code.

(i) Control fire-fighting operations aboard ships:

(A) Use of water for fire-extinguishing, the effect on ship stability, precautions, and corrective procedures; and

(B) Firefighting involving dangerous goods;

(ii) Organize and train fire parties;

(iii) Inspect and service fire-detection and extinguishing systems and equipment;

(A) *Fire-detection.* Fire-detection systems; fixed fire-extinguishing systems; portable and mobile fire-extinguishing equipment, including appliances, pumps and rescue; salvage; life-support; personal protective and communication equipment; and

(iv) Investigate and compile reports on incidents involving fire.

(d) *Service.* (1) Service as a rating will not be accepted to upgrade from the operational-level to management-level STCW endorsements.

(2) Service on the Great Lakes will be credited on a day-for-day basis.

(3) Service on inland waters other than Great Lakes, which are navigable waters of the United States, will be credited 1 day of ocean service for every 2 days of inland service for up to 50 percent of the total required service.

(4) Service accrued onboard vessels with dual tonnages (both domestic and international) will be credited using the international tonnage for the credential sought.

(5) Applicants who cannot meet the requirement for 1 year of sea service within the last 5 years as described in paragraph (c)(3) of this section, will be required to meet the requirements of paragraph (c)(1) of this section.

(e) *Operational-level endorsement.* Applicants holding domestic officer endorsements, who seek to add an STCW endorsement at the operational level, must provide evidence of meeting the STCW requirements found in this subpart, including:

(1) Meeting the service requirements for the operational-level STCW endorsement;

(2) Satisfactory completion of the STCW operational-level standards of competence; and

(3) Satisfactory completion of the STCW operational-level training as required in this part.

(f) *Management-level endorsement.* Applicants holding domestic officer endorsements as master, chief mate, chief engineer, or first assistant engineer, who seek to add an STCW endorsement at the management level, must provide evidence of meeting the STCW requirements found in this subpart, including:

(1) Meeting the service requirements for the management-level STCW endorsement;

(2) Satisfactory completion of the STCW operational- and management-level standards of competence; and

(3) Satisfactory completion of the STCW operational- and management-level training as required in this part.

(g) *Training and assessment for Automatic Radar Plotting Aids (ARPA), Electronic Chart Display and Information System (ECDIS), or* Global Maritime Distress and Safety System (*GMDSS*). Training and assessment in the use of ARPA, ECDIS, or GMDSS is not required for those who serve exclusively on ships not fitted with ARPA, ECDIS, or GMDSS. For ARPA and ECDIS, this limitation must be reflected in the endorsement issued to the seafarer concerned. The GMDSS endorsement will only be added if the applicant qualifies for it.

(h) *Exemptions and Limitations.* (1) The Coast Guard may exempt an applicant from meeting any individual knowledge, understanding, and proficiency required in the appropriate table of competence in the STCW Code. These exemptions must be approved by the Coast Guard based upon vessel type. Under these circumstances, the certificate may include a corresponding limitation.

(2) A seafarer may have a limitation removed by providing the Coast Guard with evidence of having completed the individual knowledge, understanding, and proficiency required.

(i) *Grandfathering.* (1) Except as noted otherwise, each candidate who applies for a credential based on approved or accepted training or approved seagoing service that was started on or after July 1, 2013, or who applies for the MMC endorsement on or after January 1, 2017, must meet the requirements of these regulations.

(2) Except as noted by this subpart, seafarers holding an STCW endorsement prior to July 1, 2013, will not be required to complete any additional training required under this part to retain the STCW endorsements.

(3) Except as noted otherwise, candidates who apply for a credential based on approved or accepted training or approved seagoing service that was obtained before July 1, 2013 will be required to comply with the requirements of this part existing before the publication of these regulations on [EFFECTIVE DATE OF THIS RULE]. This includes the assessments published prior to the date of publication of these regulations on [EFFECTIVE DATE OF THIS RULE], as well as the additional requirements for the STCW endorsement section.

(4) Except as noted by this subpart, the Coast Guard will continue to issue STCW endorsements to candidates meeting the requirements of this part existing before the publication of these regulations on [EFFECTIVE DATE OF THIS RULE], for seafarers identified in paragraph (i)(3) of this section, until January 1, 2017.

(j) Notwithstanding § 11.901 of this part, each mariner found qualified to

hold any of the following domestic officer endorsements will also be entitled to hold an STCW endorsement corresponding to the service or other limitations of the license or officer endorsements on the MMC. The vessels concerned are not subject to further obligation under STCW because of their special operating conditions as small vessels engaged in domestic, near-coastal voyages:

(1) Masters, mates, or engineers endorsed for service on small passenger vessels that are subject to subchapter T or K of this chapter and that operate beyond the boundary line; and

(2) Masters, mates, or engineers endorsed for service on seagoing vessels of less than 200 GRT/500 GT, other than passenger vessels subject to subchapter H of this chapter.

(k) No mariner serving on, and no owner or operator of any of the following vessels, need hold an STCW endorsement, because they are exempt from application of STCW:

(1) Fishing vessels as defined in 46 U.S.C. 2101(11)(a);

(2) Fishing vessels used as fish-tender vessels as defined in 46 U.S.C. 2101(11)(c);

(3) Barges as defined in 46 U.S.C. 102, including non-self-propelled mobile offshore drilling units; and

(4) Vessels operating exclusively on the Great Lakes or on the inland waters of the U.S. in the Straits of Juan de Fuca or on the Inside Passage between Puget Sound and Cape Spencer.

(l) No mariner serving on, and no owner or operators of uninspected passenger vessels as defined in 46 U.S.C. 2101(42)(B), need to hold an STCW endorsement. The vessels concerned are not subject to further obligation under STCW because of their special operating conditions as small vessels engaged in domestic, near-coastal voyages.

§ 11.303 STCW deck officer endorsements.

(a) Specific requirements for all STCW deck officer endorsements are detailed in the applicable sections in this part.

(1) Master on vessels of 1,600 GRT/3,000 GT or more (management level).

(2) Chief mate on vessels of 1,600 GRT/3,000 GT or more (management level).

(3) Officer in Charge of a Navigational Watch (OICNW) of vessels of 200 GRT/500 GT or more (operational level).

(4) Master of vessels of 200 GRT/500 GT or more and less than 1,600 GRT/3,000 GT (management level).

(5) Chief mate of vessels of 200 GRT/500 GT or more and less than 1,600 GRT/3,000 GT (management level).

(6) Master of vessels of less than 200 GRT/500 GT (management level).

(7) Master of vessels of less than 200 GRT/500 GT limited to near-coastal waters (management level).

(8) OICNW of vessels of less than 200 GRT/500 GT (operational level).

(9) OICNW of vessels of less than 200 GRT/500 GT limited to near-coastal waters (operational level).

§ 11.305 Requirements to qualify for an STCW endorsement as master on vessels of 1,600 GRT/3,000 GT or more (management level).

(a) To qualify for an STCW endorsement as master, an applicant must—

(1) Provide evidence of 36 months of service as OICNW on vessels of 200 GRT/500 GT or more operating in oceans, near-coastal and/or Great Lakes. However, this period may be reduced to not less than 24 months if the applicant served as chief mate for not less than 12 months. Service on inland, waters that are navigable waters of the United States may be substituted for up to 50 percent of the total required service. Experience gained in the engine department on vessels may be creditable for up to 3 months of the service requirements;

(2) Provide evidence of meeting the standard of competence specified in Section A–II/2 of the STCW Code (incorporated by reference, see § 11.102 of this part); and

(3) Provide evidence of having satisfactorily completed approved training in the following subject areas:

(i) Search and rescue;

(ii) ARPA, if required;

(iii) GMDSS, if required; and

(iv) Management of medical care.

(b) Each candidate for a renewal of an STCW endorsement as master of vessels of 1,600 GRT/3,000 GT or more, to be valid on or after January 1, 2017, must provide evidence of meeting the standard of competence in the following:

(1) Leadership and managerial skills; and

(2) ECDIS, if serving on a vessel with this equipment.

(c) The Coast Guard may exempt an applicant from meeting any individual knowledge, understanding, and proficiency required in Section A–II/2 of the STCW Code. These exemptions must be approved by the Coast Guard based upon vessel type. Under these circumstances, the certificate may include a corresponding limitation.

(d) Seafarers holding an STCW endorsement as masters of vessels of 200 GRT/500 GT or more and less than 1,600 GRT/3,000 GT, in accordance with § 11.311 of this subpart, are eligible to apply for the endorsement as master on vessels of 1,600 GRT/3,000 GT or more upon completion of 6 months of sea service, under the authority of the endorsement; and complete any items in paragraphs (a)(2) and (a)(3) of this section not previously satisfied.

(e) Seafarers with one of the following domestic officer endorsements are eligible to apply for this endorsement upon completion of the requirements in the table below:

TABLE 11.305(e)—STCW ENDORSEMENT AS MASTER ON VESSELS OF 1,600 GRT/3,000 GT OR MORE

Entry path from domestic endorsements	Sea service under authority of the endorsement *	Competence—STCW table A–II/2 **	Training required by this section ***
Master ocean or near-coastal, unlimited tonnage		Yes	Yes.
Master OSV		Yes	Yes.

* This column provides the minimum additional service required of the seafarer in order to meet the requirements of this section.
** Complete any items in paragraph (a)(2) of this section not previously satisfied.
*** Complete any items in paragraph (a)(3) of this section not previously satisfied.

§ 11.307 Requirements to qualify for an STCW endorsement as chief mate on vessels of 1,600 GRT/3,000 GT or more (management level).

(a) To qualify for an STCW endorsement as chief mate, an applicant must:

(1) Provide evidence of 12 months of service as OICNW on vessels of 200 GRT/500 GT or more operating in oceans, near-coastal and/or Great Lakes. Service on inland waters, bays, or sounds that are navigable waters of the United States may be substituted for up to 50 percent of the total required service. Experience gained in the engine department on vessels may be creditable for up to 1 month of the service requirements;

(2) Meet the standard of competence specified in Section A–II/2 of the STCW Code (incorporated by reference, see § 11.102 of this part); and

(3) Provide evidence of having satisfactorily completed approved training in the following subject areas:

(i) Search and rescue;

(ii) ARPA, if required;

(iii) GMDSS, if required; and

(iv) Management of medical care.

(b) Each candidate for a renewal of an STCW endorsement as chief mate of vessels of 1,600 GRT/3,000 GT or more, to be valid on or after January 1, 2017, must provide evidence of meeting the standard of competence in the following:

(1) Leadership and managerial skills; and

(2) ECDIS, if serving on a vessel with this equipment.

(c) The Coast Guard may exempt an applicant from meeting any individual knowledge, understanding, and proficiency required in Section A–II/2 of the STCW Code. These exemptions must be approved by the Coast Guard based upon vessel type. Under these circumstances, the certificate may include a corresponding limitation.

(d) Seafarers holding an STCW endorsement as chief mate of vessels of 200 GRT/500 GT or more and less than 1,600 GRT/3,000 GT, in accordance with § 11.313 of this subpart, are eligible to apply for the endorsement as chief mate on vessels of 1,600 GRT/3,000 GT or more upon completion of 6 months of sea service, under the authority of the endorsement; and complete any items in paragraphs (a)(2) and (a)(3) of this section not previously satisfied.

(e) Seafarers with one of the following domestic officer endorsements are eligible to apply for this endorsement upon completion of the requirements in the table below:

TABLE 11.307(e)—STCW ENDORSEMENT AS CHIEF MATE ON VESSELS OF 1,600 GRT/3,000 GT OR MORE

Entry path from domestic endorsements	Sea service under authority of the endorsement *	Competence—STCW table A–II/2 **	Training required by this section ***
Chief Mate ocean or near-coastal, unlimited tonnage		Yes	Yes.
Master ocean or near-coastal, less than 500 GRT	12 months	Yes	Yes.
Chief mate OSV		Yes	Yes.
Master Towing Vessel ocean or near-coastal	12 months	Yes	Yes.

* This column provides the minimum additional service required of the seafarer in order to meet the requirements of this section.
** Complete any items in paragraph (a)(2) of this section not previously satisfied.
*** Complete any items in paragraph (a)(3) of this section not previously satisfied.

§ 11.309 Requirements to qualify for an STCW endorsement as Officer in Charge of a Navigational Watch (OICNW) of vessels of 200 GRT/500 GT or more (operational level).

(a) To qualify for an STCW endorsement as OICNW, an applicant must:

(1) Provide evidence of seagoing service as follows:

(i) Thirty-six months of seagoing service in the deck department on vessels operating in oceans, near-coastal and/or Great Lakes. Service on inland waters, bays, or sounds that are navigable waters of the United States may be substituted for up to 50 percent of the total required service; or

(ii) Twelve months of seagoing service as part of an approved training program, which includes onboard training that meets the requirements of Section A–II/1 of the STCW Code (incorporated by reference, see § 11.102 of this part); and

(2) Provide evidence of having performed, during the required seagoing service, bridge watchkeeping duties, under the supervision of an officer holding the STCW endorsement as master, chief mate, second mate, or OICNW, for a period of not less than 6 months;

(3) Provide evidence of meeting the standard of competence specified in Section A–II/1 of the STCW Code; and

(4) Provide evidence of having satisfactorily completed approved training in the following subject areas:

(i) Medical first-aid provider;

(ii) Radar observer;

(iii) IMO Standard Marine Communication Phrases (SMCP);

(iv) Search and rescue;

(v) Basic and advanced firefighting;

(vi) Proficiency in survival craft and rescue boats other than fast rescue boats;

(vii) Visual Signaling;

(viii) Bridge Resource Management (BRM);

(ix) ARPA, if serving on a vessel with this equipment;

(xi) GMDSS, if serving on a vessel with this equipment; and

(xii) ECDIS, if serving on a vessel with this equipment.

(b) Experience gained in the engine department on vessels may be creditable for up to 3 months of the service requirements in paragraph (a)(1)(i) of this section.

(c) Each candidate for a renewal of an STCW endorsement as OICNW of vessels of 200 GRT/500 GT or more, to be valid on or after January 1, 2017, must provide evidence of meeting the standard of competence in the following:

(1) Leadership and teamworking skills; and

(2) ECDIS, if serving on a vessel with this equipment.

(d) The Coast Guard may exempt an applicant from meeting any individual knowledge, understanding, and proficiency required in Section A–II/1 of the STCW Code. These exemptions must be approved by the Coast Guard based upon vessel type. Under these circumstances, the certificate may include a corresponding limitation.

(e) Seafarers with one of the following domestic officer endorsements are eligible to apply for this endorsement upon completion of the requirements in the table below:

TABLE 11.309(e)—STCW ENDORSEMENT AS OICNW ON VESSELS OF 200 GRT/500 GT OR MORE

Entry path from domestic endorsements	Sea service under authority of the endorsement *	Competence—STCW table A–II/1 **	Training required by this section ***
Mate ocean or near-coastal, unlimited tonnage		Yes	Yes.
Mate ocean or near-coastal, less than 1,600 GRT/3,000 GT		Yes	Yes.
Mate ocean or near-coastal, NMT 500 GRT	12 months	Yes	Yes.
Mate OSV	12 months	Yes	Yes.
Mate Towing Vessel ocean or near-coastal	6 months	Yes	Yes.

* This column provides the minimum additional service required of the seafarer in order to meet the requirements of this section.
** Complete any items in paragraph (a)(3) of this section not previously satisfied.
*** Complete any items in paragraph (a)(4) of this section not previously satisfied.

§ 11.311 Requirements to qualify for an STCW endorsement as master of vessels of 200 GRT/500 GT or more and less than 1,600 GRT/3,000 GT (management level).

(a) To qualify for an STCW endorsement as master, an applicant must:

(1) Provide evidence of 36 months of service as OICNW on vessels of 200 GRT/500 GT or more, operating in oceans, near-coastal waters and/or Great Lakes. However, this period may be reduced to not less than 24 months if the applicant served as chief mate for not less than 12 months. Service on inland waters, bays, or sounds that are navigable waters of the United States may be substituted for up to 50 percent of the total required service. Experience gained in the engine department on vessels may be creditable for up to 3 months of the service requirements;

(2) Provide evidence of meeting the standard of competence specified in Section A–II/2 of the STCW Code (incorporated by reference, see § 11.102 of this part); and

(3) Provide evidence of having satisfactorily completed approved training in the following subject areas:

(i) Search and rescue;

(ii) Management of medical care;

(iii) ARPA, if serving on a vessel with this equipment; and

(iv) GMDSS, if serving on a vessel with this equipment.

(b) Each candidate for a renewal of an STCW endorsement as master of vessels of 200 GRT/500 GT or more and less than 1,600 GRT/3,000 GT, to be valid on or after January 1, 2017, must provide evidence of meeting the standard of competence in the following:

(1) Leadership and managerial skills; and

(2) ECDIS, if serving on a vessel with this equipment.

(c) The Coast Guard may exempt an applicant from meeting any individual knowledge, understanding, and proficiency required in Section A–II/2 of the STCW Code. These exemptions must be approved by the Coast Guard based upon vessel type. Under these circumstances, the certificate may include a corresponding limitation.

(d) Seafarers with one of the following domestic officer endorsements are eligible to apply for this endorsement upon completion of the requirements in the table below:

TABLE 11.311(d)—STCW ENDORSEMENT AS MASTER ON VESSELS OF 200 GRT/500 GT OR MORE AND LESS THAN 1,600 GRT/3,000 GT

Entry path from domestic endorsements	Sea service under authority of the endorsement *	Competence—STCW table A–II/3 **	Training required by this section ***
Master oceans or near-coastal, less than 1,600 GRT/3,000 GT		Yes	Yes.
Master OSV		Yes	Yes.
Master oceans or near-coastal, less than 500 GRT	12 months	Yes	Yes.
Master Towing Vessel oceans or near-coastal	12 months	Yes	Yes.

* This column provides the minimum additional service required of the seafarer in order to meet the requirements of this section.
** Complete any items in paragraph (a)(2) of this section not previously satisfied.
*** Complete any items in paragraph (a)(3) of this section not previously satisfied.

§ 11.313 Requirements to qualify for an STCW endorsement as chief mate of vessels of 200 GRT/500 GT or more and less than 1,600 GRT/3,000 GT (management level).

(a) To qualify for an STCW endorsement as chief mate, an applicant must:

(1) Provide evidence of 12 months of service as OICNW on vessels of 200 GRT/500 GT or more, operating in oceans, near-coastal waters and/or Great Lakes. Service on inland waters, bays, or sounds that are navigable waters of the United States may be substituted for up to 50 percent of the total required service. Experience gained in the engine department on vessels may be creditable for up to 1 month of the service requirements;

(2) Provide evidence of meeting the standard of competence specified in Section A–II/2 of the STCW Code (incorporated by reference, see § 11.102 of this part); and

(3) Provide evidence of having satisfactorily completed approved training in the following subject areas:

(i) Search and rescue;

(ii) Management of medical care;

(iii) ARPA, if serving on a vessel with this equipment; and

(iv) GMDSS, if serving on a vessel with this equipment.

(b) Each candidate for a renewal of an STCW endorsement as chief mate of vessels of 200 GRT/500 GT or more and less than 1,600 GRT/3,000 GT, to be valid on or after January 1, 2017, must provide evidence of meeting the standard of competence in the following:

(1) Leadership and managerial skills; and

(2) ECDIS, if serving on a vessel with this equipment.

(c) The Coast Guard may exempt an applicant from meeting any individual knowledge, understanding, and proficiency required in Section A–II/2 of the STCW Code. These exemptions must be approved by the Coast Guard based upon vessel type. Under these

circumstances, the certificate may include a corresponding limitation.

(d) Seafarers with one of the following domestic officer endorsements are eligible to apply for this endorsement upon completion of the requirements in the table below:

TABLE 11.313(d)—STCW ENDORSEMENT AS CHIEF MATE ON VESSELS OF 200 GRT/500 GT OR MORE AND LESS THAN 1,600 GRT/3,000 GT

Entry path from domestic endorsements	Sea service under authority of the endorsement *	Competence—STCW table A–II/2 **	Training required by this section ***
Chief mate OSV		Yes	Yes.
Master oceans or near-coastal, less than 500 GRT	6 months	Yes	Yes.
Master Towing Vessel oceans or near-coastal	6 months	Yes	Yes.

* This column provides the minimum additional service required of the seafarer in order to meet the requirements of this section.
** Complete any items in paragraph (a)(2) of this section not previously satisfied.
*** Complete any items in paragraph (a)(3) of this section not previously satisfied.

§ 11.315 Requirements to qualify for an STCW endorsement as master of vessels of less than 200 GRT/500 GT (management level).

(a) To qualify for an STCW endorsement as master, an applicant must:

(1) Provide evidence of 36 months of seagoing service as OICNW on vessels operating in oceans, near-coastal waters and/or Great Lakes; however, this period may be reduced to not less than 24 months if not less than 12 months of such seagoing service has been served as OICNW. Service on inland waters, bays, or sounds that are navigable waters of the United States may be substituted for up to 50 percent of the total required service. Experience gained in the engine department may be creditable for up to 3 months of the service requirements;

(2) Provide evidence of meeting the standard of competence specified in Section A–II/2 of the STCW Code (incorporated by reference, see § 11.102 of this part); and

(3) Provide evidence of having satisfactorily completed approved training in the following subject areas:

(i) Search and rescue;

(ii) Management of medical care;

(iii) ARPA, if serving on a vessel with this equipment; and

(iv) GMDSS, if serving on a vessel with this equipment.

(b) Each candidate for a renewal of an STCW endorsement as master of vessels of less than 200 GRT/500 GT, to be valid on or after January 1, 2017, must provide evidence of meeting the standard of competence in the following:

(1) Leadership and managerial skills; and

(2) ECDIS, if serving on a vessel with this equipment.

(c) The Coast Guard may exempt an applicant from meeting any individual knowledge, understanding, and proficiency required in Section A–II/2 of the STCW Code. These exemptions must be approved by the Coast Guard based upon vessel type. Under these circumstances, the certificate may include a corresponding limitation.

(d) Seafarers with one of the following domestic officer endorsements are eligible to apply for this endorsement upon completion of the requirements in the table below:

TABLE 11.315(d)—STCW ENDORSEMENT AS MASTER OF VESSELS OF LESS THAN 200 GRT/500 GT

Entry path from domestic endorsements	Sea service under authority of the endorsement*	Competence—STCW table A–II/3 **	Training required by this section***
Master oceans or near-coastal, less than 500 GRT		Yes	Yes.
Master Towing Vessel oceans or near-coastal		Yes	Yes.
Master oceans or near-coastal, less than 200 GRT	12 months	Yes	Yes.

* This column provides the minimum additional service required of the seafarer in order to meet the requirements of this section.
** Complete any items in paragraph (a)(2) of this section not previously satisfied.
*** Complete any items in paragraph (a)(3) of this section not previously satisfied.

§ 11.317 Requirements to qualify for an STCW endorsement as master of vessels of less than 200 GRT/500 GT limited to near-costal waters (management level).

(a) To qualify for an STCW endorsement as chief mate, an applicant must:

(1) Provide evidence of 12 months of service as OICNW on vessels of 200 GRT/500 GT or more, operating in oceans, near-coastal waters and/or Great Lakes. Service on inland waters, bays, or sounds that are navigable waters of the United States may be substituted for up to 50 percent of the total required service. Experience gained in the engine department on vessels may be creditable for up to 1 month of the service requirements;

(2) Provide evidence of meeting the standard of competence specified in Section A–II/2 of the STCW Code (incorporated by reference, see § 11.102 of this part); and

(3) Provide evidence of having satisfactorily completed approved training in the following subject areas:

(i) Medical first-aid provider;

(ii) Basic and advanced firefighting;

(iii) Proficiency in survival craft and rescue boats other than fast rescue boats;

(iv) Radar observer, if required; and

(v) ARPA, if serving on a vessel with this equipment.

(b) Each candidate for a renewal of an STCW endorsement as master of vessels of less than 200 GRT/500 GT limited to near-coastal waters, to be valid on or after January 1, 2017, must provide evidence of meeting the standard of competence in the following:

(1) Leadership and managerial skills; and

(2) ECDIS, if serving on a vessel with this equipment.

(c) The Coast Guard may exempt an applicant from meeting any individual knowledge, understanding, and

proficiency required in Section A–II/3 of the STCW Code. These exemptions must be approved by the Coast Guard based upon vessel type. Under these circumstances, the certificate may include a corresponding limitation.

(d) Seafarers with one of the following domestic officer endorsements are eligible to apply for this endorsement upon completion of the requirements in the table below:

TABLE 11.317(d)—STCW ENDORSEMENT AS MASTER OF VESSELS OF LESS THAN 200 GRT/500 GT LIMITED TO NEAR-COASTAL WATERS

Entry path from domestic endorsements	Sea service under authority of the endorsement*	Competence—STCW table A–II/3 **	Training required by this section***
Mate oceans or near-coastal, less than 500 GRT		Yes	Yes.
Mate towing vessel oceans or near-coastal		Yes	Yes.
Master oceans or near-coastal, less than 200 GRT/500 GT	6 months	Yes	Yes.
Mate oceans or near-coastal, less than 200 GRT/500 GT	12 months	Yes	Yes.

* This column provides the minimum additional service required of the seafarer in order to meet the requirements of this section.
** Complete any items in paragraph (a)(2) of this section not previously satisfied.
*** Complete any items in paragraph (a)(3) of this section not previously satisfied.

§ 11.319 Requirements to qualify for an STCW endorsement as Officer in Charge of a Navigational Watch (OICNW) of vessels of less than 200 GRT/500 GT (operational level).

(a) To qualify for an STCW endorsement as OICNW, an applicant must:

(1) Provide evidence of 36 months of service in the deck department on vessels operating in oceans, near-coastal waters, and/or Great Lakes. Service on inland waters, bays, or sounds that are navigable waters of the United States may be substituted for up to 50 percent of the required service. Experience gained in the engine department may be creditable for up to 3 months of the service requirements; or

(2) Provide evidence of not less than 12 months of seagoing service as part of an approved training program that includes onboard training that meets the requirements of Section A–II/1 of the STCW Code (incorporated by reference, see § 11.102 of this part); and

(3) Provide evidence of having performed during the required seagoing service, bridge watchkeeping duties, under the supervision of an officer holding the STCW endorsement as master, chief mate, or OICNW, for a period of not less than 6 months. The Coast Guard will accept service on vessels as boatswain, able seaman, or quartermaster while holding the appropriate deck watchkeeping rating endorsement, which may be accepted on a two-for-one basis to a maximum allowable substitution of 3 months (6 months of experience equals 3 months of creditable service);

(4) Provide evidence of meeting the standard of competence specified in Section A–II/3 of the STCW Code; and

(5) Provide evidence of having satisfactorily completed approved training in the following subject areas:

(i) Medical first-aid provider;

(ii) Radar observer;

(iii) IMO SMCP;

(iv) Basic and advanced firefighting;

(v) Proficiency in survival craft and rescue boats other than fast rescue boats;

(vi) Visual signaling;

(vii) Bridge Resource Management (BRM);

(viii) ARPA, if serving on a vessel with this equipment;

(ix) GMDSS, if serving on a vessel with this equipment; and

(x) ECDIS, if serving on a vessel with this equipment.

(b) Each candidate for a renewal of an STCW endorsement as OICNW of vessels of less than 200 GRT/500 GT, to be valid on or after January 1, 2017, must provide evidence of meeting the standard of competence in the following:

(1) Leadership and teamworking skills; and

(2) ECDIS, if serving on a vessel with this equipment.

(c) The Coast Guard may exempt an applicant from meeting any individual knowledge, understanding, and proficiency required in Section A–II/3 of the STCW Code. These exemptions must be approved by the Coast Guard based upon vessel type. Under these circumstances, the certificate may include a corresponding limitation.

(d) Seafarers with one of the following domestic officer endorsements are eligible to apply for this endorsement upon completion of the requirements in the table below:

TABLE 11.319(d)—STCW ENDORSEMENT AS OFFICER IN CHARGE OF A NAVIGATIONAL WATCH (OICNW) OF VESSELS OF LESS THAN 200 GRT/500 GT

Entry path from domestic endorsements	Sea service under authority of the endorsement*	Competence—STCW table A–II/3**	Training required by this section***
Mate oceans or near-coastal, less than 500 GRT O/NC		Yes	Yes.
Mate towing vessel oceans or near-coastal		Yes	Yes.
Master oceans or near-coastal, less than 200 GRT/500 GT	6 months	Yes	Yes.
Mate oceans or near-coastal, less than 200 GRT/500 GT	12 months	Yes	Yes.

* This column provides the minimum additional service required of the seafarer in order to meet the requirements of this section.
** Complete any items in paragraph (a)(2) of this section not previously satisfied.
*** Complete any items in paragraph (a)(3) of this section not previously satisfied.

§ 11.321 Requirements to qualify for an STCW endorsement as Officer in Charge of a Navigational Watch (OICNW) of vessels of less than 200 GRT/500 GT limited to near-coastal waters (operational level).

(a) To qualify for an STCW endorsement as OICNW, an applicant must:

(1) Provide evidence of seagoing service as follows:

(i) Twenty four months of seagoing service in the deck department on vessels operating in oceans, near-coastal, and/or Great Lakes. Service on inland waters, bays, or sounds that are navigable waters of the United States may be substituted for up to 50 percent of the total required service. Experience gained in the engine department may be creditable for up to 3 months of the service requirements; or

(ii) Successful completion of an approved training program that includes seagoing service as required by the Coast Guard; or

(iii) Successful completion of approved training for this section and obtain 12 months of seagoing service;

(2) Provide evidence of meeting the standard of competence specified in Section A–II/3 of the STCW Code (incorporated by reference, see § 11.102 of this part); and

(3) Provide evidence of having satisfactorily completed approved training in the following subject areas:

(i) Medical first-aid provider;

(ii) Basic and advanced firefighting;

(iii) Proficiency in survival craft and rescue boats other than fast rescue boats;

(iv) Bridge Resource Management (BRM);

(v) Radar observer, if required; and

(vi) ARPA, if serving on a vessel with this equipment.

(b) Each candidate for a renewal of an STCW endorsement as OICNW of vessels of less than 200 GRT/500 GT limited to near-coastal waters, to be valid on or after January 1, 2017, must provide evidence of meeting the standard of competence in the following:

(1) Leadership and teamworking skills; and

(2) ECDIS, if serving on a vessel with this equipment.

(c) The Coast Guard may exempt an applicant from meeting any individual knowledge, understanding, and proficiency required in Section A–II/3 of the STCW Code. These exemptions must be approved by the Coast Guard based upon vessel type. Under these circumstances, the certificate may include a corresponding limitation.

(d) Seafarers with one of the following domestic officer endorsements are eligible to apply for this endorsement upon completion of the requirements in the table below:

TABLE 11.321(d)—STCW ENDORSEMENT AS OICNW OF VESSELS OF LESS THAN 200 GRT/500 GT LIMITED TO NEAR-COASTAL WATERS

Entry path from domestic endorsements	Sea service under authority of the endorsement *	Competence—STCW table A–II/3 **	Training required by this section ***
Mate oceans or near-coastal less than 500 GRT		Yes	Yes.
Mate Towing Vessel oceans or near-coastal		Yes	Yes.
Master oceans or near-coastal, less than 200 GRT		Yes	Yes.
Mate oceans or near-coastal, less than 200 GRT	6 months	Yes	Yes.

* This column provides the minimum additional service required of the seafarer in order to meet the requirements of this section.
** Complete any items in paragraph (a)(2) of this section not previously satisfied.
*** Complete any items in paragraph (a)(3) of this section not previously satisfied.

§ 11.323 STCW engineer officer endorsements.

(a) Specific requirements for all STCW engineer officer endorsements are detailed in the applicable sections in this part.

(1) Chief engineer officer on vessels powered by main propulsion machinery of 3,000 kW/4,000 HP propulsion power or more (management level).

(2) Second engineer officer on vessels powered by main propulsion machinery of 3,000 kW/4,000 HP propulsion power or more (management level).

(3) Officer in Charge of an Engineering Watch (OICEW) in a manned engineroom or designated duty engineer in a periodically unmanned engineroom on vessels powered by main propulsion machinery of 750 kW/1,000 HP propulsion power or more (operational level).

(4) Chief engineer officer on vessels powered by main propulsion machinery of between 750 kW/1,000 HP and 3,000 kW/4,000 HP propulsion power (management level).

(5) Second engineer officer on vessels powered by main propulsion machinery of 750 kW/1,000 HP to 3,000 kW/4,000 HP propulsion power (management level).

(6) Electro-technical officer on vessels powered by main propulsion machinery of 750 kW/1,000 HP or more (operational level).

(b) *Limitations.* (1) STCW engineer officer endorsements issued in accordance with §§ 11.325, 11.327, 11.329, 11.331, 11.333, and 11.335 of this subpart will be restricted to specific propulsion modes for steam, motor, or gas turbine-propelled as appropriate.

(2) STCW engineer officer endorsements issued in accordance with §§ 11.325, 11.327, 11.329, 11.331, 11.333, and 11.335 of this subpart for motor or gas turbine-propelled propulsion modes may be endorsed as limited to serve on vessels without auxiliary boilers, waste-heat boilers, or distilling plants. An applicant may qualify for removal of any of these limitations by completing Coast Guard-approved or -accepted training.

(c) An engineer officer who does not hold an STCW endorsement may serve on seagoing vessels propelled by machinery of less than 1,000 HP/750 kW, the vessels specified in § 15.103(f) and (g) of this subchapter, and vessels operating on the Great Lakes or inland waters of the United States.

(d) An officer endorsement issued in the grade of chief engineer (limited) or assistant engineer (limited) allows the holder to serve within any propulsion power limitations on vessels of unlimited tonnage on inland waters, on vessels of less than 1,600 GRT/3,000 GT in Great Lakes service, and on the vessels specified in § 15.103(f) and (g) of this subchapter.

(e) An officer endorsement issued after [EFFECTIVE DATE OF THIS RULE] in any grade of a designated duty engineer (DDE) authorizes the holder to serve within stated propulsion power limitations on vessels of less than 500 GRT on the Great Lakes or inland waters, and on vessels of less than 500 GRT as specified in § 15.103(f) and (g) of this subchapter.

§ 11.325 Requirements to qualify for an STCW endorsement as chief engineer officer on vessels powered by main propulsion machinery of 3,000 kW/4,000 HP propulsion power or more (management level).

(a) To qualify for an STCW endorsement as chief engineer officer, an applicant must:

(1) Provide evidence of not less than 36 months of service as OICEW on ships powered by main propulsion machinery of 750 kW/1,000 HP propulsion power or more; however, this period may be reduced to not less than 24 months if the applicant has served for not less than 12 months as second engineer officer on ships powered by propulsion machinery of 3,000 kW/4,000 HP or more;

(2) Provide evidence of meeting the standard of competence specified in Section A–III/2 of the STCW Code (incorporated by reference, see § 11.102 of this part); and

(3) Provide evidence of having satisfactorily completed approved training in maintaining the safety and security of the vessel, crew, and passengers.

(b) Each candidate for a renewal of an STCW endorsement as chief engineer officer on vessels powered by main propulsion machinery of 3,000 kW/4,000 HP propulsion power or more, to be valid on or after January 1, 2017, must provide evidence of meeting the standard of competence in the following:

(1) Leadership and managerial skills; and

(2) Management of electrical and electronic control equipment.

(c) The Coast Guard may exempt an applicant from meeting any individual knowledge, understanding, and proficiency required in Section A–III/2 of the STCW Code. These exemptions must be approved by the Coast Guard based upon vessel type. Under these circumstances, the certificate may include a corresponding limitation.

(d) Seafarers with one of the following domestic officer endorsements are eligible to apply for this endorsement upon completion of the requirements in the table below:

TABLE 11.325(d)—STCW ENDORSEMENT AS CHIEF ENGINEER OFFICER ON VESSELS POWERED BY MAIN PROPULSION MACHINERY OF 3,000KW/4,000HP PROPULSION POWER OR MORE

Entry path from domestic endorsements	Sea service *	Competence—STCW table A–III/2 **	Training required by this section ***
Chief engineer		Yes	Yes.
Chief engineer (limited—near-coastal)	12 months	Yes	Yes.
Chief engineer (limited—oceans)	12 months	Yes	Yes.
Chief engineer (MODU)	12 months/24 months [1].	Yes	Yes.
Chief engineer (OSV)		Yes	Yes.
Designated Duty Engineer, any horsepower [2]	24 months as DDE	Yes	Yes.

* This column provides the minimum additional service required of the seafarer in order to meet the requirements of this section.
** Complete any items in paragraph (a)(2) of this section not previously satisfied.
*** Complete any items in paragraph (a)(3) of this section not previously satisfied.
[1] Depending on the type of sea service used to obtain chief engineer (MODU) (refer to § 11.542 of this part).
[2] STCW certificate should be limited to vessels less than 500 GRT.

§ 11.327 Requirements to qualify for an STCW endorsement as second engineer officer on vessels powered by main propulsion machinery of 3,000kW/4,000 HP propulsion power or more (management level).

(a) To qualify for an STCW endorsement as second engineer officer, an applicant must:

(1) Provide evidence of not less than 12 months of service as OICEW on vessels powered by main propulsion machinery of 750kW or more; or 12 months of sea service as a chief engineer on vessels powered by propulsion machinery of vessels between 750k W/1,000 HP and 3,000 kW/4,000 HP;

(2) Provide evidence of meeting the standard of competence specified in Section A–III/2 of the STCW Code (incorporated by reference, see § 11.102 of this part); and

(3) Provide evidence of having satisfactorily completed approved training in maintaining the safety and security of the vessel, crew, and passengers.

(b) Each candidate for a renewal of an STCW endorsement as second engineer officer on vessels powered by main propulsion machinery of 3,000 kW/4,000 HP propulsion power or more, to be valid on or after January 1, 2017, must provide evidence of meeting the standard of competence in the following:

(1) Leadership and managerial skills; and

(2) Management of electrical and electronic control equipment.

(c) The Coast Guard may exempt an applicant from meeting any individual knowledge, understanding, and proficiency required in Section A–III/2 of the STCW Code. These exemptions must be approved by the Coast Guard based upon vessel type. Under these circumstances, the certificate may include a corresponding limitation.

(d) Seafarers with one of the following domestic officer endorsements are eligible to apply for this endorsement upon completion of the requirements in the table below:

TABLE 11.327(d)—STCW ENDORSEMENT AS SECOND ENGINEER OFFICER ON VESSELS POWERED BY MAIN PROPULSION MACHINERY OF 3,000 KW/4,000 HP PROPULSION POWER OR MORE

Entry path from domestic endorsements	Sea service *	Competence—STCW table A–III/2 **	Training required by this section ***
First assistant engineer		Yes	Yes.
Second assistant engineer		Yes	Yes.
Third assistant engineer	12 months	Yes	Yes.

TABLE 11.327(d)—STCW ENDORSEMENT AS SECOND ENGINEER OFFICER ON VESSELS POWERED BY MAIN PROPULSION MACHINERY OF 3,000 kW/4,000 HP PROPULSION POWER OR MORE—Continued

Entry path from domestic endorsements	Sea service *	Competence—STCW table A–III/2 **	Training required by this section ***
Assistant engineer (limited-oceans)	12 months	Yes	Yes.
Chief engineer MODU	12 months	Yes	Yes.
Chief engineer OSV		Yes	Yes.
Designated Duty Engineer, unlimited [1]	12 months as DDE	Yes	Yes.

* This column provides the minimum additional service required of the seafarer in order to meet the requirements of this section.
** Complete any items in paragraph (a)(2) of this section not previously satisfied.
*** Complete any items in paragraph (a)(3) of this section not previously satisfied.
[1] STCW certificate should be limited to vessels less than 500 GRT.

§ 11.329 Requirements to qualify for an STCW endorsement as Officer in Charge of an Engineering Watch (OICEW) in a manned engineroom or designated duty engineer in a periodically unmanned engineroom on vessels powered by main propulsion machinery of 750 kW/1,000 HP propulsion power or more (operational level).

(a) To qualify for an STCW endorsement as OICEW, an applicant must:

(1) Provide evidence of seagoing service as follows:

(i) Thirty-six months of seagoing service in the engine department; or

(ii) Successful completion of an approved training program, which includes a combination of workshop skill training and seagoing service of not less than 12 months, and that meets the requirements of Section A–III/1 of the STCW Code (incorporated by reference, see § 11.102 of this part);

(2) Provide evidence of having performed during the required seagoing service, engine room watchkeeping duties, under the supervision of an officer holding the STCW endorsement as chief engineer officer or as a qualified engineer officer, for a period of not less than 6 months;

(3) Provide evidence of meeting the standard of competence specified in Section A–III/1 of the STCW Code; and

(4) Provide evidence of having satisfactorily completed approved training in the following subject areas:

(i) Medical first-aid provider;

(ii) Basic and advanced firefighting; and

(iii) Proficiency in survival craft and rescue boats other than fast rescue boats.

(b) Experience gained in the deck department may be creditable for up to 3 months of the service requirements in paragraph (a)(1)(i) of this section.

(c) Each candidate for a renewal of an STCW endorsement as OICEW, to be valid on or after January 1, 2017, must provide evidence of meeting the standard of competence in leadership and teamworking skills at the operational level.

(d) The Coast Guard may exempt an applicant from meeting any individual knowledge, understanding, and proficiency required in Section A–III/1 of the STCW Code. These exemptions must be approved by the Coast Guard based upon vessel type. Under these circumstances, the certificate may include a corresponding limitation.

(e) Seafarers with one of the following domestic officer endorsements are eligible to apply for this endorsement upon completion of the requirements in the table below:

TABLE 11.329(e)—STCW ENDORSEMENT AS OICEW IN A MANNED ENGINEROOM OR DESIGNATED DUTY ENGINEER IN A PERIODICALLY UNMANNED ENGINEROOM ON VESSELS POWERED BY MAIN PROPULSION MACHINERY OF 750 kW/1,000 HP PROPULSION POWER OR MORE (OPERATIONAL LEVEL)

Entry path from domestic endorsements	Sea service *	Competence—STCW table A–III/1 **	Training required by this section ***
Third assistant engineer any horsepower		Yes	Yes.
Second assistant engineer any horsepower		Yes	Yes.
Assistant engineer (limited)		Yes	Yes.
Designated duty engineer, unlimited) (less than 500 GRT)		Yes	Yes.
Assistant engineer (MODU)		Yes	Yes.
Engineer (OSV)		Yes	Yes.
Designated Duty Engineer, 1,000 kW/4,000 HP [1]	12 months	Yes	Yes.
Designated Duty Engineer, 750 kW/1,000 HP [1]	24 months	Yes	Yes.

* This column provides the minimum additional service required of the seafarer in order to meet the requirements of this section.
** Complete any items in paragraph (a)(3) of this section not previously satisfied.
*** Complete any items in paragraph (a)(4) of this section not previously satisfied.
[1] STCW certificate should be limited to vessels less than 500 GRT.

§ 11.331 Requirements to qualify for an STCW endorsement as chief engineer officer on vessels powered by main propulsion machinery of between 750 kW/1,000 HP and 3,000 kW/4,000 HP propulsion power (management level).

(a) To qualify for an STCW endorsement as chief engineer officer, an applicant must:

(1) Provide evidence of meeting the requirements for certification as OICEW, and have not less than 24 months of service on seagoing vessels powered by main propulsion machinery of not less than 750 kW/1,000 HP, of which not less than 12 months must be served while qualified to serve as second engineer officer. Experience gained in the deck department may be creditable for up to 2 months of the total service requirements;

(2) Provide evidence of meeting the standard of competence specified in Section A–III/3 of the STCW Code (incorporated by reference, see § 11.102 of this part); and

(3) Provide evidence of having satisfactorily completed approved training in maintaining the safety and security of the vessel, crew, and passengers.

(b) Each candidate for a renewal of an STCW endorsement as chief engineer officer on vessels powered by main propulsion machinery of between 750 kW/1,000 HP and 3,000 kW/4,000 HP propulsion power, to be valid on or after January 1, 2017, must provide evidence of meeting the standard of competence in the following:

(1) Leadership and managerial skills; and

(2) Management of electrical and electronic control equipment.

(c) An engineer officer qualified to serve as second engineer officer on vessels powered by main propulsion machinery of 3,000 kW/4,000 HP or more, may serve as chief engineer officer on vessels powered by main propulsion machinery of between 750 kW/1000 HP and 3,000 kW/4000 HP provided the certificate is so endorsed.

(d) The Coast Guard may exempt an applicant from meeting any individual knowledge, understanding, and proficiency required in Section A–III/3 of the STCW Code. These exemptions must be approved by the Coast Guard based upon vessel type. Under these circumstances, the certificate may include a corresponding limitation.

(e) Seafarers with one of the following domestic officer endorsements are eligible to apply for this endorsement upon completion of the requirements in the table below:

TABLE 11.331(e)—STCW ENDORSEMENT AS CHIEF ENGINEER OFFICER ON VESSELS POWERED BY MAIN PROPULSION MACHINERY OF BETWEEN 750 kW/1,000 HP AND 3,000 kW/4,000 HP PROPULSION POWER

Entry path from domestic endorsements	Sea service *	Competence—STCW table A–III/2 **	Training required by this section ***
Chief engineer		Yes	Yes.
First assistant engineer		Yes	Yes.
Chief engineer (limited-near-coastal)		Yes	Yes.
Chief engineer (limited-oceans)		Yes	Yes.
Chief engineer OSV		Yes	Yes
Chief engineer MODU	12 months	Yes	Yes.
Designated Duty Engineer, 1,000 kW/4,000 HP	12 months	Yes	Yes.
Designated Duty Engineer, 750 kW/1,000 HP	24 months	Yes	Yes.

* This column provides the minimum additional service required of the seafarer in order to meet the requirements of this section.
** Complete any items in paragraph (a)(2) of this section not previously satisfied.
*** Complete any items in paragraph (a)(3) of this section not previously satisfied.

§ 11.333 Requirements to qualify for an STCW endorsement as second engineer officer on vessels powered by main propulsion machinery of between 750kW/1,000 HP and 3,000 kW/4,000 HP propulsion power (management level).

(a) To qualify for an STCW endorsement as second engineer officer, an applicant must:

(1) Provide evidence of meeting the requirements for certification as OICEW, as well as serving not less than 12 months as assistant engineer officer or engineer officer on vessels powered by main propulsion machinery of not less than 750 kW/1,000 HP. Experience gained in the deck department may be creditable for up to 1 month of the total service requirements;

(2) Provide evidence of meeting the standard of competence specified in Section A–III/3 of the STCW Code (incorporated by reference, see § 11.102 of this part); and

(3) Provide evidence of having satisfactorily completed approved training in maintaining the safety and security of the vessel, crew, and passengers.

(b) Each candidate for a renewal of an STCW endorsement as second engineer officer on vessels powered by main propulsion machinery of between 750 kW/1,000 HP and 3,000 kW/4,000 HP propulsion power, to be valid on or after January 1, 2017, must provide evidence of meeting the standard of competence in the following:

(1) Leadership and managerial skills; and

(2) Management of electrical and electronic control equipment.

(c) The Coast Guard may exempt an applicant from meeting any individual knowledge, understanding, and proficiency required in Section A–III/3 of the STCW Code. These exemptions must be approved by the Coast Guard based upon vessel type. Under these circumstances, the certificate may include a corresponding limitation.

(d) Seafarers with one of the following domestic officer endorsements are eligible to apply for this endorsement upon completion of the requirements in the table below:

TABLE 11.333(d)—STCW ENDORSEMENT AS SECOND ENGINEER OFFICER ON VESSELS POWERED BY MAIN PROPULSION MACHINERY OF BETWEEN 750 kW/1,000 HP AND 3,000 kW/4,000 HP PROPULSION POWER.

Entry path from domestic endorsements	Sea service *	Competence—STCW table A–III/2 **	Training required by this section ***
First assistant engineer		Yes	Yes.
Second assistant engineer		Yes	Yes.
Third assistant engineer	12 months	Yes	Yes.
Assistant engineer (limited-oceans)		Yes	Yes.
Engineer OSV		Yes	Yes.
Assistant engineer MODU	12 months [1]	Yes	Yes.

* This column provides the minimum additional service required of the seafarer in order to meet the requirements of this section.
** Complete any items in paragraph (a)(2) of this section not previously satisfied.
*** Complete any items in paragraph (a)(3) of this section not previously satisfied.

[1] Depending on the type of sea service used to obtain chief engineer (MODU) (refer to § 11.542 of this part).

§ 11.335 Requirements to qualify for an STCW endorsement as an electro-technical officer on vessels powered by main propulsion machinery of 750 kW/1,000 HP or more (operational level).

(a) To qualify for an STCW endorsement as an electro-technical officer, an applicant must:

(1) Provide evidence of 36 months combined workshop skills training and approved seagoing service of which not less than 30 months will be seagoing service in the engine department of vessels. Experience gained in the deck department may be creditable for up to 3 months of the service requirements; or completion of an approved training program, which includes a combination of workshop skill training and seagoing service of not less than 12 months, and that meets the requirements of Section A–III/6 of the STCW Code (incorporated by reference, see § 11.102 of this part);

(2) Provide evidence of meeting the standard of competence specified in Section A–III/6 of the STCW Code; and

(3) Provide evidence of having satisfactorily completed approved training in the following subject areas:

(i) Medical first-aid provider;

(ii) Basic and advanced firefighting; and

(iii) Proficiency in survival craft and rescue boats other than fast rescue boats.

(b) Any applicant who has served in a relevant capacity onboard a vessel for a period of not less than 12 months within the last 60 months and meets the standards of competence specified in Section A–III/6 of the STCW Code is considered by the Coast Guard to be suitably qualified but must provide evidence of:

(1) Twelve months of seagoing service; and

(2) Having achieved the standards of competence specified in Section A–III/6 of the STCW Code.

(c) An applicant who holds an STCW endorsement as OICEW, second engineer officer, or chief engineer officer issued on or after July 1, 2013, and who has served onboard a seagoing vessel powered by main-propulsion machinery of 750 kW/1,000 HP or more acting under the authority of the STCW endorsements, for a period of not less than 12 months in the previous 60 months, will qualify for this endorsement without additional training, service, or assessment.

(d) An applicant who holds an STCW endorsement as OICEW, second engineer officer, or chief engineer officer issued prior to July 1, 2013, must complete the assessment and training described in paragraph (a)(2) of this section, in order to qualify for this endorsement without additional training, service, or assessment.

(e) An applicant who does not hold any other domestic or STCW endorsement will be issued the electro-technical officer endorsement without any corresponding domestic endorsement.

Subpart D—Professional Requirements for Domestic Deck Officer Endorsements

§ 11.401 Ocean and near-coastal domestic officer endorsements.

(a) Subject to the provisions of §§ 11.464(g) and 11.465(b) of this subpart, any license or MMC endorsement for service as master or mate on ocean waters qualifies the mariner to serve in the same grade on any waters, except towing vessels upon western rivers subject to the limitations of the endorsement.

(b) Subject to the provisions of §§ 11.464(g) and 11.465(b) of this subpart, any license or MMC endorsement issued for service as master or mate on near-coastal waters qualifies the mariner to serve in the same grade on Great Lakes and inland waters, except towing vessels upon western rivers subject to the limitations of the endorsement.

(c) Near-coastal endorsements for unlimited tonnage require the same number of years of service as the ocean-unlimited endorsements. The primary differences in these endorsements are the nature of the service and the scope of the required training, examination, and assessment.

(d) A master or mate on vessels of 200 GRT/500 GT or more, and a master or mate on vessels under 200 GRT/500 GT, may be endorsed for sail or auxiliary sail as appropriate. The applicant must present the equivalent total service required for conventional officer endorsements, including at least 1 year of deck experience on that specific type of vessel. For example, for an officer endorsement as master of vessels of less than 1,600 GRT/3,000 GT endorsed for auxiliary sail, the applicant must meet the total experience requirements for the conventional officer endorsement, including time as mate, and the proper tonnage experience, including at least 1 year of deck service, on appropriately sized auxiliary sail vessels. For an endorsement to serve on vessels of less than 200 GRT/500 GT, see the individual endorsement requirements.

§ 11.402 Tonnage requirements for domestic ocean or near-coastal endorsements for vessels of 1,600 GRT/3,000 GT or more.

(a) To qualify for a domestic ocean or near-coastal endorsement for service on vessels of unlimited tonnage:

(1) All the required experience must be obtained on vessels of 100 GRT or more; and

(2) At least one-half of the required experience must be obtained on vessels of 1,600 GRT/3,000 GT or more.

(b) If an applicant for a domestic endorsement as master or mate of unlimited tonnage does not have the service on vessels of 1,600 GRT/3,000 GT or more as required by paragraph (a)(2) of this section, a tonnage limitation will be placed on the MMC based on the applicant's qualifying experience. The endorsement will be limited to the maximum tonnage on which at least 25 percent of the required experience was obtained, or 150 percent of the maximum tonnage on which at least 50 percent of the service was obtained, whichever is higher. However, the minimum tonnage limitation calculated according to this paragraph will be 2,000 GRT. Limitations are in multiples of 1,000 GRT using the next higher figure when an intermediate tonnage is calculated. When the calculated limitation equals or exceeds 10,000 GRT/GT, the applicant is issued an unlimited tonnage endorsement.

(c) Tonnage limitations imposed under paragraph (b) of this section may be raised or removed in the following manner:

(1) When the applicant provides evidence of 6 months of service on vessels of 1,600 GRT/3,000 GT or more in the highest grade endorsed, all tonnage limitations will be removed;

(2) When the applicant provides evidence of 6 months of service on vessels of 1,600 GRT/3,000 GT or more in any capacity as an officer other than the highest grade for which he or she is endorsed, all tonnage limitations for the grade in which the service is performed will be removed and the next higher grade endorsement will be raised to the tonnage of the vessel on which the majority of the service was performed. The total cumulative service before and after issuance of the limited license or MMC officer endorsement may be considered in removing all tonnage limitations; or

(3) When the applicant has 12 months of service as able seaman on vessels of 1,600 GRT/3,000 GT or more while holding a license or endorsement as

third mate, all tonnage limitations on the third mate's license or MMC officer endorsement will be removed.

(d) No applicant holding any domestic endorsement as master or mate of vessels of less than 1,600 GRT/3,000 GT, less than 500 GRT, or less than 25–200 GRT may use the provisions of paragraph (c) of this section to increase the tonnages of his or her license or endorsement.

§ 11.403 Structure of domestic deck officer endorsements.

The following diagram illustrates the domestic deck officer endorsement structure, including crossover points. The section numbers on the diagram refer to the specific requirements applicable.

Figure 11.403: Structure of domestic deck officer endorsements.

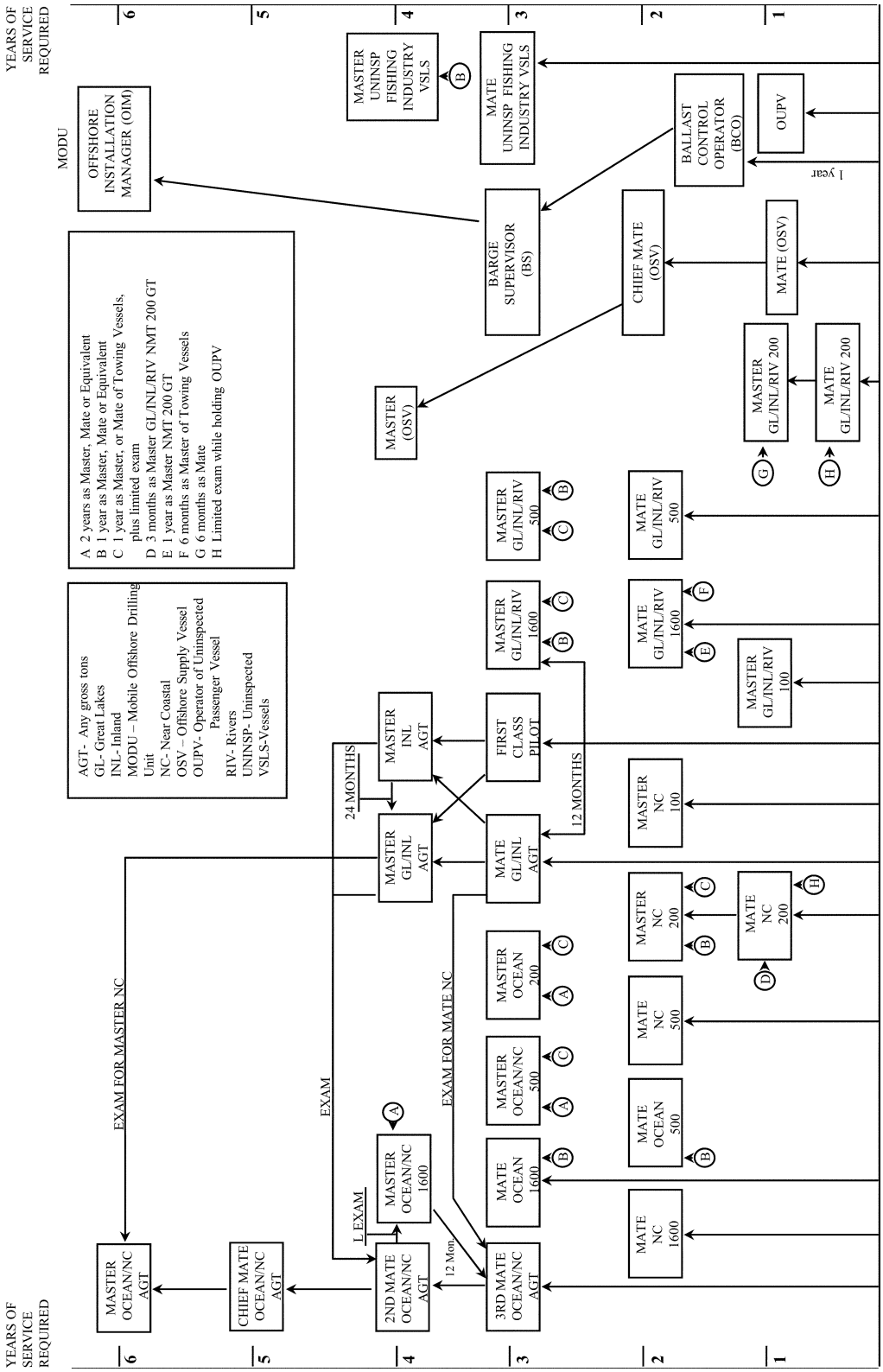

§ 11.404 Service requirements for domestic master of ocean or near-coastal self-propelled vessels of unlimited tonnage.

(a) The minimum service required to qualify an applicant for an endorsement as master of ocean or near-coastal self-propelled vessels of unlimited tonnage is:

(1) One year of service as chief mate on ocean self-propelled vessels; or

(2) One year of service on ocean self-propelled vessels of unlimited tonnage while holding a license or MMC endorsement as chief mate of ocean self-propelled vessels as follows:

(i) A minimum of 6 months of service as chief mate; and

(ii) Service as officer in charge of a navigational watch accepted on a two-for-one basis (12 months as second or

third mate equals 6 months of creditable service).

(b) A person holding this endorsement may qualify for an STCW endorsement, according to § 11.305 of this part.

(c) An individual holding an endorsement or license as master of Great Lakes and inland, self-propelled vessels of unlimited tonnage, or master of inland, self-propelled vessels of unlimited tonnage, may obtain an endorsement as master of oceans or near-coastal, self-propelled vessels of unlimited tonnage by providing evidence of sea service of not less than 24 months under the authority of the credential and by completing the prescribed examination in subpart I of this part.

§ 11.405 Service requirements for domestic chief mate of ocean or near-coastal self-propelled vessels of unlimited tonnage.

(a) The minimum service required to qualify an applicant for an endorsement as chief mate of ocean or near-coastal self-propelled vessels of unlimited tonnage is 1 year of service as officer in charge of a navigational watch on ocean self-propelled vessels while holding a license or MMC endorsement as second mate.

(b) A person holding this endorsement may qualify for an STCW endorsement, according to § 11.307 of this part.

§ 11.406 Service requirements for domestic second mate of ocean or near-coastal self-propelled vessels of unlimited tonnage.

(a) The minimum service required to qualify an applicant for a domestic endorsement as second mate of ocean or near-coastal self-propelled vessels of unlimited tonnage is:

(1) One year of service as officer in charge of a navigational watch on ocean self-propelled vessels while holding a license or endorsement as third mate; or

(2) While holding a license or MMC endorsement as third mate of ocean self-propelled vessels of unlimited tonnage, 12 months of service on deck as follows:

(i) A minimum of 6 months service as officer in charge of a deck watch on ocean self-propelled vessels;

(ii) Service on ocean self-propelled vessels as boatswain, able seaman, or quartermaster while holding a certificate or MMC endorsement as able seaman, which may be accepted on a two-for-one basis to a maximum allowable substitution of six months (12 months of experience equals 6 months of creditable service); or

(iii) If an individual holds an endorsement or license as master of Great Lakes and inland self-propelled vessels of unlimited tonnage or master of inland self-propelled vessels of unlimited tonnage, he or she may obtain an endorsement as second mate of ocean or near-coastal self-propelled vessels of unlimited tonnage by completing the prescribed examination in subpart I of this part.

(b) A person holding this endorsement may qualify for an STCW endorsement, according to § 11.309 of this part.

§ 11.407 Service requirements for domestic third mate of ocean or near-coastal self-propelled vessels of unlimited tonnage.

(a) The minimum service or training required to qualify an applicant for a domestic endorsement as third mate of ocean or near-coastal self-propelled vessels of unlimited tonnage is:

(1) Three years of service in the deck department on ocean self-propelled vessels, 6 months of which must have been as able seaman, boatswain, or quartermaster. Experience gained in the engine department on vessels of appropriate tonnage may be creditable for up to 3 months of the service requirements for this officer endorsement; or

(2) Graduation from:

(i) The U.S. Merchant Marine Academy (deck curriculum);

(ii) The U.S. Coast Guard Academy with qualification as an underway officer in charge of a navigational watch, underway officer of the deck, or deck watch officer;

(iii) The U.S. Naval Academy with qualification as an underway officer in charge of a navigational watch, underway officer of the deck, or deck watch officer; or

(iv) The deck class of a maritime academy approved by and conducted under rules prescribed by the Maritime Administrator and listed in part 310 of this title, including the ocean option program in the deck class of the Great Lakes Maritime Academy; or

(3) Satisfactory completion of a 3-year apprentice mate training program approved by the Coast Guard.

(b) Graduation from the deck class of the Great Lakes Maritime Academy with no ocean sea service will qualify the graduate to be examined for an endorsement as third mate near-coastal self-propelled vessels of unlimited tonnage.

(c) While holding a license or MMC endorsement as master of ocean or near-coastal self-propelled vessels of less than 1,600 GRT/3,000 GT, 1 year of service as master on vessels of more than 200 GRT/500 GT operating on ocean or near-coastal waters will qualify the applicant for an endorsement as third mate of ocean or near-coastal self-propelled vessels of unlimited tonnage.

(d) An individual holding an endorsement or license as mate of Great Lakes and inland, self-propelled vessels of unlimited tonnage, or master of inland, self-propelled vessels of unlimited tonnage, may obtain an endorsement as third mate of oceans or near-coastal, self-propelled vessels of unlimited tonnage by completing the prescribed examination in subpart I of this part.

(e) A person holding this endorsement may qualify for an STCW endorsement, according to § 11.309 of this part.

§ 11.410 Requirements for domestic deck officer endorsements for vessels of less than 1,600 GRT/3,000 GT.

(a) Endorsements as master and mate of vessels of less than 1,600 GRT/3,000 GT are issued in the following tonnage categories:

(1) Less than 1,600 GRT/3,000 GT;

(2) Less than 500 GRT; or

(3) Between 25 and 200 GRT in 50-ton increments and with appropriate mode of propulsion such as self-propelled, sail, or auxiliary sail.

(b) Experience gained in the engine department on vessels of appropriate tonnage may be creditable for up to 90 days of the service requirements for any master or mate endorsement in this category.

(c) An officer's endorsement in this category obtained with an orally assisted examination will be limited to 500 GRT. In order to raise that tonnage limit to 1,600 GRT/3,000 GT, the written examination and service requirements must be satisfied.

§ 11.412 Service requirements for domestic master of ocean or near-coastal self-propelled vessels of less than 1,600 GRT/3,000 GT.

(a) The minimum service required to qualify an applicant for an endorsement as master of ocean or near-coastal self-propelled vessels of less than 1,600 GRT/3,000 GT is:

(1) Four years total service on ocean or near-coastal waters. Service on Great Lakes and inland waters may substitute for up to 2 years of the required service. Two years of the required service must have been on vessels of more than 100 GRT. Two years of the required service must have been as a master, mate, master or mate (pilot) of towing vessels, or equivalent position while holding a license or MMC endorsement as master, mate, or master or mate (pilot) of towing vessels. One year of the service as master, mate, master or mate (pilot) of towing vessels, or equivalent position

must have been on vessels of more than 100 GRT.

(b) An applicant holding a license or MMC endorsement as chief mate or second mate of ocean or near-coastal self-propelled vessels of 1,600 GRT/3,000 GT or more is eligible for this endorsement upon completion of a limited examination.

(c) A person holding this endorsement may qualify for an STCW endorsement, according to § 11.311 of this part.

§ 11.414 Service requirements for domestic mate of ocean self-propelled vessels of less than 1,600 GRT/3,000 GT.

(a) The minimum service required to qualify an applicant for an endorsement as mate of self-propelled vessels of less than 1,600 GRT/3,000 GT is:

(1) Three years of total service in the deck department of ocean or near-coastal self-propelled, sail, or auxiliary sail vessels.

(i) Service on Great Lakes and inland waters may substitute for up to 18 months of the required service.

(ii) One year of the required service must have been on vessels of more than 100 GRT.

(iii) One year of the required service must have been as a master, mate, master or mate (pilot) of towing vessels, or equivalent position while holding a license or MMC endorsement as master, mate, or master or mate (pilot) of towing vessels. Six months of the required service as master, mate, master or mate (pilot) of towing vessels, or equivalent position must have been on vessels of more than 100 GRT; or

(2) Three years of total service in the deck department on ocean or near-coastal self-propelled, sail, or auxiliary sail vessels of more than 200 GRT/500 GT. Six months of the required service must have been as able seaman.

(b) A person holding this endorsement may qualify for an STCW endorsement, according to § 11.309 of this part.

§ 11.416 Service requirements for domestic mate of near-coastal self-propelled vessels of less than 1,600 GRT/3,000 GT.

(a) The minimum service required to qualify an applicant for an endorsement as mate of near-coastal self-propelled vessels of less than 1,600 GRT/3,000 GT is 2 years of total service in the deck department of ocean or near-coastal self-propelled, sail, or auxiliary sail vessels. Service on Great Lakes and inland waters may substitute for up to 1 year of the required service. One year of the required service must have been on vessels of more than 100 GRT. Six months of the required service must have been as able seaman, boatswain, quartermaster, or equivalent position on vessels of more than 100 GRT while holding a certificate or endorsement as able seaman.

(b) A person holding this endorsement may qualify for an STCW endorsement, according to § 11.309 of this part.

§ 11.418 Service requirements for domestic master of ocean or near-coastal self-propelled vessels of less than 500 GRT.

(a) The minimum service required to qualify an applicant for an endorsement as master of ocean or near-coastal self-propelled vessels of less than 500 GRT is:

(1) Three years total of service on ocean or near-coastal waters. Service on Great Lakes and inland waters may substitute for up to 18 months of the required service. Two years of the required service must have been as a master, mate, or equivalent position while holding a license or MMC endorsement as master, mate, or operator of uninspected passenger vessels. One year of the required service as master, mate, or equivalent position must have been on vessels of more than 50 GRT.

(b) The holder of a license or MMC endorsement as master or mate (pilot) of towing vessels authorizing service on oceans or near-coastal routes is eligible for an endorsement as master of ocean or near-coastal self-propelled vessels of less than 500 GRT after both 1 year of service as master or mate of towing vessels on oceans or near-coastal routes and completion of a examination.

(c) A person holding this endorsement may qualify for an STCW endorsement, according to §§ 11.307, 11.311, 11.313, and 11.315 of this part.

§ 11.420 Service requirements for domestic mate of ocean self-propelled vessels of less than 500 GRT.

(a) The minimum service required to qualify an applicant for an endorsement as mate of ocean self-propelled vessels of less than 500 GRT is 2 years of total service in the deck department of ocean or near-coastal self-propelled, sail, or auxiliary sail vessels. Service on Great Lakes and inland waters may substitute for up to 1 year of the required service. One year of the required service must have been as a master, mate, or equivalent position while holding a license or endorsement as master, mate, or operator of uninspected passenger vessels. Six months of the required service as master, mate, or equivalent position must have been on vessels of more than 50 GRT.

(b) A person holding this endorsement may qualify for an STCW endorsement, according to §§ 11.309, 11.317, 11.319, and 11.321 of this part.

§ 11.421 Service requirements for domestic mate of near-coastal self-propelled vessels of less than 500 GRT.

(a) The minimum service required to qualify an applicant for an endorsement as mate of near-coastal self-propelled vessels of less than 500 GRT is 2 years of total service in the deck department of ocean or near-coastal self-propelled, sail, or auxiliary sail vessels. Service on Great Lakes and inland waters may substitute for up to 1 year of the required service. One year of the required service must have been on vessels of more than 50 GRT. Three months of the required service must have been as able seaman, boatswain, quartermaster, or equivalent position on vessels of more than 50 GRT while holding a certificate or endorsement as able seaman.

(b) A person holding this endorsement may qualify for an STCW endorsement, according to §§ 11.309, 11.317, 11.319, and 11.321 of this part.

§ 11.422 Tonnage limitations and qualifying requirements for domestic endorsements as master or mate of vessels of less than 200 GRT.

(a) Each domestic endorsement as master or mate of vessels of less than 200 GRT is issued with a tonnage limitation based on the applicant's qualifying experience. The tonnage limitation will be issued at the 25, 50, 100, or 200 GRT level. The endorsement will be limited to the maximum GRT on which at least 25 percent of the required experience was obtained, or 150 percent of the maximum GRT on which at least 50 percent of the service was obtained, whichever is higher. Limitations are as stated above, using the next higher figure when an intermediate tonnage is calculated. If more than 75 percent of the qualifying experience is obtained on vessels of 5 GRT or less, the MMC will automatically be limited to vessels of less than 25 GRT.

(b) The tonnage limitation may be raised as follows:

(1) For an endorsement as mate, with at least 45 days of additional service on deck of a vessel in the highest tonnage increment authorized by the officer endorsement;

(2) For an endorsement as master, with at least 90 days of additional service on deck of a vessel in the highest tonnage increment authorized by the master endorsement;

(3) With additional service, which, when combined with all previously accumulated service, will qualify the applicant for a higher tonnage officer endorsement under the basic formula

specified in paragraph (a) of this section; or

(4) With six months additional service in the deck department on vessels within the highest tonnage increment on the officer's license or MMC endorsement. In this case, the tonnage limitation may be raised one increment.

(c) When the service is obtained on vessels upon which no personnel need an officer endorsement or license, the Coast Guard must be satisfied that the nature of this required service (i.e., size of vessel, route, equipment, etc.) is a reasonable equivalent to the duties performed on vessels which are required to engage individuals with officer endorsements.

(d) Service gained in the engine room on vessels of 200 GRT may be creditable for up to 90 days of the deck service requirements for mate.

§ 11.424 Requirements for domestic master of ocean self-propelled vessels of less than 200 GRT.

(a) The minimum service required to qualify an applicant for an officer endorsement as master of ocean self-propelled vessels of less than 200 GRT is:

(1) Three years of total service on ocean or near-coastal waters. Service on Great Lakes and inland waters may substitute for up to 18 months of the required service. Two years of the required service must have been as master, mate, or equivalent position while holding a license or MMC endorsement as master, as mate, or as operator of uninspected passenger vessels; or

(2) Two years of total service as a master or mate of ocean or near-coastal towing vessels. Completion of an examination is also required.

(b) In order to obtain a domestic officer endorsement for sail or auxiliary sail vessels, the applicant must submit evidence of 12 months of service on sail or auxiliary sail vessels. The required 12 months of service may have been obtained prior to issuance of the master's license or MMC endorsement.

(c) A person holding this endorsement may qualify for an STCW endorsement, according to §§ 11.315, 11.317, 11.319, and 11.321 of this part.

§ 11.426 Requirements for domestic master of self-propelled seagoing vessels of less than 200 GRT limited to domestic voyages upon near-coastal waters.

(a) Within the limitations specified, this endorsement is valid for service only on the vessels identified in § 15.103(f) and (g) of this subchapter. The minimum service required to qualify for a master of near-coastal self-propelled vessels of less than 200 gross tons is:

(1) Two years total service on ocean or near-coastal waters. Service on Great Lakes and inland waters may substitute for up to 1 year of the required service. One year of the required service must have been as a master, mate, or equivalent position while holding a license or endorsement as master, mate, or operator of uninspected passenger vessels; or

(2) One year of total service as master or mate of towing vessels on oceans or near-coastal routes. Completion of an examination is also required.

(b) To obtain this domestic officer endorsement for sail or auxiliary sail vessels, the applicant must submit evidence of 12 months of service on sail or auxiliary sail vessels. These 12 months of experience may have been obtained before qualifying for an officer endorsement.

(c) Holders of this endorsement are considered to be in compliance with the STCW Convention (incorporated by reference, see § 11.102 of this part) while operating within the limitations of this endorsement, and they may be issued an STCW endorsement without further obligation.

§ 11.427 Requirements for domestic mate of self-propelled seagoing vessels of less than 200 GRT limited to domestic voyages upon near-coastal waters.

(a) Within the limitations specified, this endorsement is valid for service on the vessels identified in § 15.103(f) and (g) of this subchapter. The minimum service required to qualify for the endorsement as mate of near-coastal, self-propelled vessels of less than 200 gross tons is:

(1) Twelve months of total service in the deck department of ocean or near-coastal self-propelled, sail, or auxiliary sail vessels. Service on Great Lakes and inland waters may substitute for up to 6 months of the required service; or

(2) Three months of service in the deck department of self-propelled vessels operating on ocean, near-coastal, Great Lakes, or inland waters while holding a license or MMC endorsement as master of inland self-propelled, sail, or auxiliary sail vessels of less than 200 GRT/500 GT.

(b) The holder of a license or MMC endorsement as operator of uninspected passenger vessels with a near-coastal route endorsement may obtain this endorsement by successfully completing an examination on rules and regulations for small passenger vessels.

(c) To obtain this domestic officer endorsement for sail or auxiliary sail vessels, the applicant must submit evidence of 6 months of deck service on sail or auxiliary sail vessels.

(d) A license or MMC endorsement as master of near-coastal self-propelled vessels may be endorsed as mate of sail or auxiliary sail vessels upon presentation of 3 months of service on sail or auxiliary sail vessels.

(e) To obtain a tonnage endorsement for 100 GRT or more, the applicant must complete the additional examination topics indicated in subpart I of this part.

(f) A person holding this endorsement may qualify for an STCW endorsement, according to §§ 11.317, 11.319, and 11.321 of this part.

§ 11.428 Requirements for domestic master of self-propelled, seagoing vessels of less than 100 GRT limited to domestic voyages upon near-coastal waters.

(a) Within the limitations specified, this endorsement is valid for service on the vessels identified in § 15.103(f) and (g) of this subchapter. The minimum service required to qualify for the endorsement as master of self-propelled, seagoing vessels of less than 100 GRT limited to domestic voyages upon near-coastal waters is 2 years of service in the deck department of a self-propelled vessel on ocean or near-coastal waters. Service on Great Lakes and inland waters may substitute for up to 1 year of the required service.

(b) To obtain an endorsement for sail or auxiliary sail vessels, the applicant must submit evidence of 12 months of service on sail or auxiliary-sail vessels. This required service may have been obtained before issuance of the license or MMC.

(c) Holders of this endorsement are considered to be in compliance with the STCW Convention (incorporated by reference, see § 11.102 of this part) while operating within the limitations of this endorsement, and they may be issued an STCW endorsement without further obligation.

§ 11.429 Requirements for a domestic limited master of self-propelled, seagoing vessels of less than 100 GRT limited to domestic voyages upon near-coastal waters.

(a) Within the limitations specified, this domestic endorsement is valid for service on the vessels identified in § 15.103(f) and (g) of this subchapter. A limited masters' endorsement for service on near-coastal waters on vessels of less than 100 GRT may be issued to an applicant to be employed by organizations such as yacht clubs, marinas, formal camps, and educational institutions. A domestic endorsement issued under this section is limited to the specific activity and the locality of the yacht club, marina, or camp. To

obtain this restricted endorsement, an applicant must:

(1) Have 4 months of service on any waters in the operation of the type of vessel for which the endorsement is requested;

(2) Satisfactorily complete a safe boating course approved by the National Association of State Boating Law Administrators, or a safe boating course conducted by the U.S. Power Squadron or the American Red Cross, or a Coast Guard-approved course. This course must have been completed within 5 years before the date of application; and

(3) Pass an examination appropriate for the activity to be conducted and the route authorized.

(b) The first aid and cardiopulmonary resuscitation (CPR) course certificates required by § 11.201(i) of this part will only be required when, in the opinion of the Coast Guard, the geographic area over which service is authorized precludes obtaining medical services within a reasonable time.

(c) To obtain an endorsement for sail or auxiliary sail vessels, the applicant must submit evidence of 4 months of service on sail or auxiliary sail vessels. The required 4 months of service may have been obtained prior to issuance of the license or MMC endorsement.

(d) Holders of this domestic endorsement are considered to be in compliance with the STCW Convention (incorporated by reference, see § 11.102 of this part) while operating within the limitations of this endorsement.

§ 11.430 Endorsements for the Great Lakes and inland waters.

(a) Any officer endorsement issued for service on Great Lakes and inland waters self-propelled vessels, excluding towing vessels, is valid on all of the inland waters of the United States as defined in § 10.107 of this subchapter.

(b) Any officer endorsement issued for service on inland waters self-propelled vessels, excluding towing vessels, is valid for the inland waters of the United States, excluding the Great Lakes.

(c) Any officer endorsement issued for service on inland waters or an inland route is valid for service on the sheltered waters of the Inside Passage between Puget Sound and Cape Spencer, Alaska.

(d) As these officer endorsements authorize service on waters seaward of the International Regulations for Preventing Collisions at Sea (COLREGS) demarcation lines, as defined in 33 CFR part 80, the applicant must complete an examination on the COLREGS or the endorsement will exclude such waters.

(e) To obtain a master or mate endorsement with a tonnage limit of 200 GRT/500 GT or more, whether an original, raise-in-grade, or increase in the scope of authority, the applicant must meet the training requirements in § 11.201(h) and (i) of this part and successfully complete radar observer training in § 11.480 of this part.

(f) The following diagram (Figure 11.430(f)) illustrates the deck officer endorsement structure, including crossover points, for Great Lakes and inland waters service. The section numbers on the diagram refer to the specific requirements that are applicable.

BILLING CODE 9110–04–P

Figure 11.430(f): Structure of deck officer endorsements for Great Lakes and inland waters service

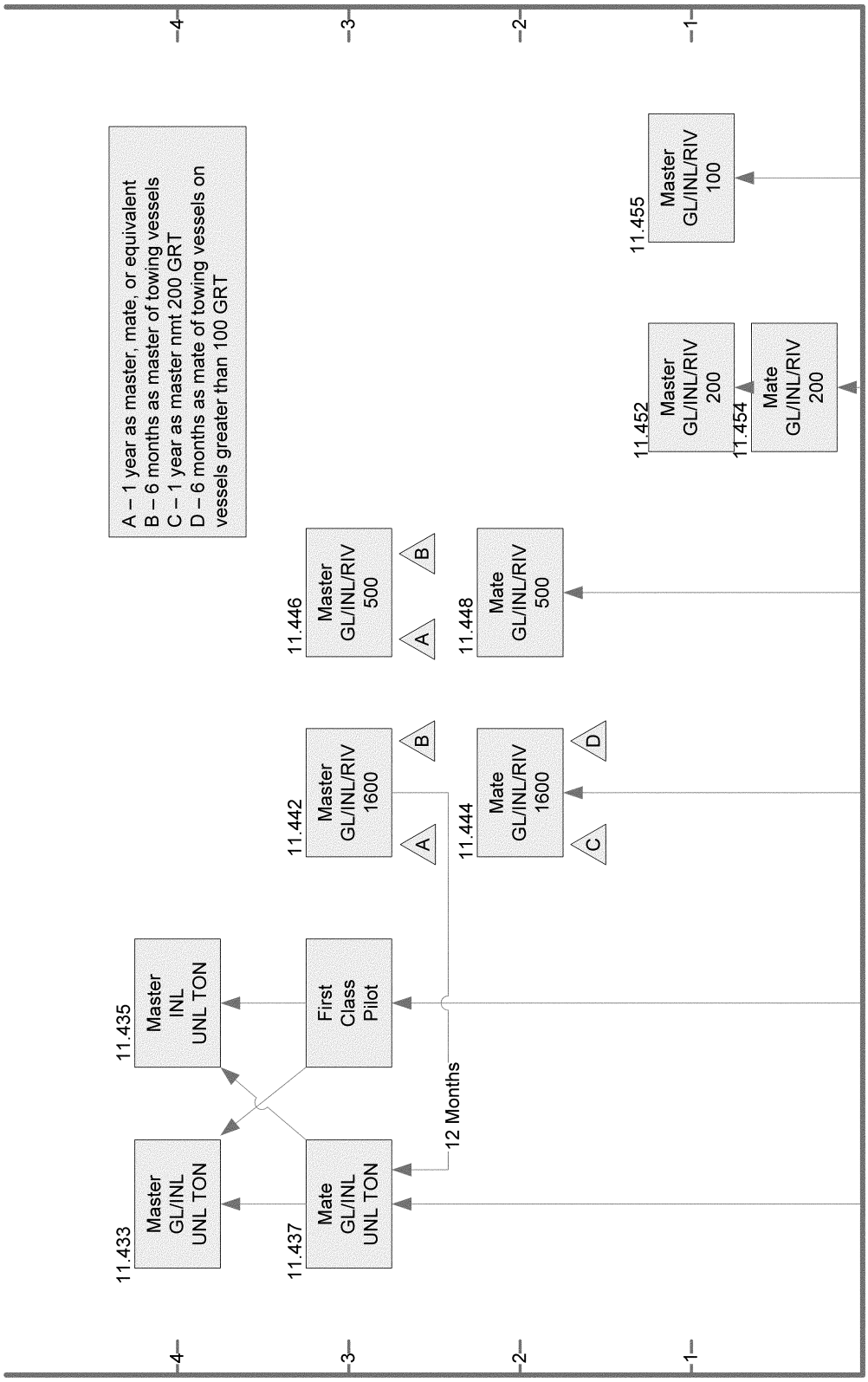

BILLING CODE 9110–04–C

§ 11.431 Tonnage requirements for Great Lakes and inland domestic endorsements for vessels of 1,600 GRT/3,000 GT or more.

(a) All required experience for Great Lakes and inland unlimited endorsements must be obtained on vessels of 200 GRT/500 GT or more. At least one-half of the required experience must be obtained on vessels of 1,600 GRT/3,000 GT or more.

(b) Tonnage limitations may be imposed on these endorsements in accordance with § 11.402(b) and (c) of this subpart.

§ 11.433 Requirements for domestic master of Great Lakes and inland self-propelled vessels of unlimited tonnage.

(a) The minimum service required to qualify an applicant for an endorsement as master of Great Lakes and inland self-propelled vessels of unlimited tonnage is:

(1) One year of service as a mate or first-class pilot while acting in the capacity of first mate of Great Lakes self-propelled vessels of 1,600 GRT/3,000 GT or more while holding a license or MMC endorsement as mate inland or first-class pilot of Great Lakes and inland self-propelled vessels of unlimited tonnage; or

(2) Two years of service as master of self-propelled vessels of 1,600 GRT/3,000 GT or more on inland waters, excluding the Great Lakes; or

(3) One year of service upon Great Lakes waters while holding a license or MMC endorsement as mate or first-class pilot of Great Lakes and inland self-propelled vessels of 1,600 GRT/3,000 GT or more. A minimum of 6 months of this service must have been in the capacity of first mate. Service as second mate is accepted for the remainder on a two-for-one basis to a maximum of 6 months (12 months of service equals 6 months of creditable service).

(b) A person holding this endorsement may qualify for an STCW endorsement, according to §§ 11.305, 11.307, and 11.311 of this part.

§ 11.435 Requirements for domestic master of inland self-propelled vessels of unlimited tonnage.

(a) The minimum service required to qualify an applicant for an endorsement as master of self-propelled vessels of unlimited tonnage on inland waters, excluding the Great Lakes is:

(1) One year of service as first-class pilot (of other than canal and small lakes routes) or mate of Great Lakes or inland self-propelled vessels of 1,600 GRT/3,000 GT or more while holding a license or MMC endorsement as mate inland or first-class pilot of Great Lakes and inland self-propelled vessels of unlimited tonnage; or

(2) Two years of service as wheelsman or quartermaster while holding a mate/first-class pilot license or MMC endorsement.

(b) A person holding this endorsement may qualify for an STCW endorsement, according to § 11.307 of this part.

§ 11.437 Requirements for domestic mate of Great Lakes and inland self-propelled vessels of unlimited tonnage.

(a) The minimum service required to qualify an applicant for an endorsement as mate of Great Lakes and inland self-propelled vessels of unlimited tonnage is:

(1) Three years of service in the deck department of self-propelled vessels, at least 3 months of which must have been on vessels on inland waters and at least 6 months of which must have been as able seaman, inland mate, boatswain, wheelsman, quartermaster, or equivalent position;

(2) Graduation from the deck class of the Great Lakes Maritime Academy; or

(3) While holding a license or MMC endorsement as master of Great Lakes and inland self-propelled vessels of less than 1,600 GRT/3,000 GT, 1 year of service as master on vessels of 200 GRT/500 GT or more. A tonnage limitation may be placed on this license in accordance with § 11.431 of this subpart.

(b) Service gained in the engine department on vessels of appropriate tonnage may be creditable for up to 6 months of the service requirements under paragraph (a)(1) of this section.

(c) A person holding this endorsement may qualify for an STCW endorsement, according to § 11.309 of this part.

§ 11.442 Requirements for domestic master of Great Lakes and inland self-propelled vessels of less than 1,600 GRT/3,000 GT.

(a) The minimum service required to qualify an applicant for an endorsement as master of Great Lakes and inland self-propelled vessels of less than 1,600 GRT/3,000 GT is:

(1) Three years of total service on vessels. Eighteen months of the required service must have been on vessels of 100 GRT or more. One year of the required service must have been as a master, mate, or equivalent position on vessels of 100 GRT or more while holding a license or MMC endorsement as master, mate, or master of towing vessels; or

(2) Six months of service as operator on vessels of 100 GRT or more while holding a license or MMC endorsement as master of towing vessels.

§ 11.444 Requirements for domestic mate of Great lakes and inland self-propelled vessels of less than 1,600 GRT/3,000 GT.

(a) The minimum service required to qualify an applicant for an endorsement as mate of Great Lakes and inland self-propelled vessels of less than 1,600 GRT/3,000 GT is:

(1) Two years of total service in the deck department of self-propelled vessels. One year of the required service must have been on vessels of 100 GRT or more. Six months of the required service must have been as able seaman, boatswain, quartermaster, or equivalent position on vessels of 100 GRT or more while holding a certificate or endorsement as able seaman; or

(2) One year of total service as master of self-propelled, sail, or auxiliary sail vessels, or operator of uninspected passenger vessels of 50 GRT or more, while holding a license or MMC endorsement as master of self-propelled vessels of less than 200 GRT/500 GT or OUPV; or

(3) Six months of total service as mate (pilot) of towing vessels on vessels of 100 GRT or more.

§ 11.446 Requirements for domestic master of Great Lakes and inland self-propelled vessels of less than 500 GRT.

(a) The minimum service required to qualify an applicant for an endorsement as master of Great Lakes and inland self-propelled vessels of less than 500 GRT is:

(1) Three years of total service on vessels. One year of the required service must have been as a master, mate, or equivalent position on vessels of 50 GRT or more while holding a license or MMC endorsement as master, mate, or OUPV.

(2) [Reserved]

(b) An applicant holding a license or MMC endorsement as master of ocean, near-coastal, or Great Lakes and inland towing vessels is eligible for this endorsement after 6 months of service as master of towing vessels and completion of an examination. This requires 3½ years of service. Two years of this service must have been served while holding a license or MMC endorsement as master or mate (pilot) of towing vessels, or mate.

§ 11.448 Requirements for domestic mate of Great Lakes and inland self-propelled vessels of less than 500 GRT.

The minimum service required to qualify an applicant for an endorsement as mate of Great Lakes and inland self-propelled vessels of less than 500 GRT is 2 years of total service in the deck department of self-propelled vessels. One year of the required service must have been on vessels of 50 GRT or more. Three months of the required service must have been as able seaman, boatswain, quartermaster, or equivalent position on vessels of 50 GRT or more while holding an endorsement as able seaman.

§ 11.450 Tonnage limitations and qualifying requirements for domestic endorsements as master or mate of Great Lakes and inland vessels of less than 200 GRT.

(a) Except as noted in paragraph (d) of this section, all endorsements issued for master or mate of vessels of less than 200 GRT are issued in 50 GRT

increments based on the applicant's qualifying experience in accordance with the provisions of § 11.422 of this subpart.

(b) Service gained in the engineroom on vessels of less than 200 GRT may be creditable for up to 25 percent of the deck service requirements for mate.

(c) When the service is obtained on vessels upon which personnel with licenses or endorsements are not required, the Coast Guard must be satisfied that the nature of this required service (i.e., size of vessel, route, equipment, etc.) is a reasonable equivalent to the duties performed on vessels which are required to engage individuals with endorsements.

(d) If more than 75 percent of the qualifying experience is obtained on vessels of 5 GRT or less, the license will automatically be limited to vessels of less than 25 GRT.

§ 11.452 Requirements for domestic master of Great Lakes and inland self-propelled vessels of less than 200 GRT/500 GT.

(a) The minimum service required to qualify an applicant for an endorsement or license as master of Great Lakes and inland self-propelled vessels of less than 200 GRT is 1 year of service on vessels. Six months of the required service must have been as master, mate, or equivalent position while holding a license or endorsement as master, mate, master or mate (pilot) of towing vessels, or OUPV. To obtain authority to serve on the Great Lakes, 3 months of the required service must have been on Great Lakes waters; otherwise the endorsement will be limited to the inland waters of the United States (excluding the Great Lakes).

(b) To obtain an endorsement for sail or auxiliary sail vessels, the applicant must have 6 months of service on sail or auxiliary sail vessels. This required service may have been obtained prior to issuance of the master's license or MMC endorsement.

§ 11.454 Requirements for domestic mate of Great Lakes and inland self-propelled vessels of less than 200 GRT/500 GT.

(a) The minimum service required to qualify an applicant for an endorsement as mate of Great Lakes and inland self-propelled vessels of less than 200 GRT/500 GT is 6 months of service in the deck department of self-propelled vessels. To obtain authority to serve on the Great Lakes, 3 months of the required service must have been on Great Lakes waters; otherwise the endorsement will be limited to the inland waters of the United States (excluding the Great Lakes).

(b) To obtain an endorsement for sail or auxiliary sail vessels, the applicant must submit evidence of 3 months of service on sail or auxiliary sail vessels.

(c) A mariner holding an endorsement as master of self-propelled vessels may be endorsed as mate of sail or auxiliary sail vessels upon presentation of 3 months service on sail or auxiliary sail vessels.

(d) The holder of a license or MMC endorsement as operator of inland uninspected passenger vessels may obtain this endorsement by successfully completing an examination on rules and regulations for small passenger vessels. To obtain authority to serve on the Great Lakes, 3 months of the required service must have been on Great Lakes waters; otherwise the endorsement will be limited to the inland waters of the United States (excluding the Great Lakes).

(e) To obtain a tonnage endorsement for 100 GRT or more, the applicant must complete the additional examination topics indicated in subpart I of this part.

§ 11.455 Requirements for domestic master of Great Lakes and inland self-propelled vessels of less than 100 GRT.

(a) The minimum service required to qualify an applicant for an endorsement as master of Great Lakes and inland self-propelled vessels of less than 100 GRT is 1 year of total service in the deck department of self-propelled, sail, or auxiliary sail vessels. To obtain authority to serve on the Great Lakes, 3 months of the required service must have been on Great Lakes waters; otherwise the endorsement will be limited to the inland waters of the United States (excluding the Great Lakes).

(b) To obtain an endorsement for sail or auxiliary sail vessels, the applicant must submit evidence of 6 months of service on sail or auxiliary sail vessels. The required 6 months of service may have been obtained prior to issuance of the endorsement.

§ 11.456 Requirements for domestic limited master of Great Lakes and inland self-propelled vessels of less than 100 GRT.

(a) An endorsement as limited master for vessels of less than 100 GRT upon Great Lakes and inland waters may be issued to an applicant to be employed by organizations such as formal camps, educational institutions, yacht clubs, and marinas with reduced service requirements. An endorsement issued under this paragraph is limited to the specific activity and the locality of the camp, yacht club, or marina. To obtain this restricted endorsement, an applicant must:

(1) Have 4 months of service in the operation of the type of vessel for which the endorsement is requested; and

(2) Satisfactorily complete a safe boating course approved by the National Association of State Boating Law Administrators, a public education course conducted by the U.S. Power Squadron or the American Red Cross, or a Coast Guard-approved course. This course must have been completed within 5 years before the date of application; and

(3) Pass an examination appropriate for the activity to be conducted and the route authorized.

(b) The first aid and cardiopulmonary resuscitation (CPR) course certificates required by § 11.201(i) of this part will only be required when, in the opinion of the Coast Guard, the geographic area over which service is authorized precludes obtaining medical services within a reasonable time.

§ 11.457 Requirements for domestic master of inland self-propelled vessels of less than 100 GRT.

(a) An applicant for an endorsement as master of inland self-propelled vessels of less than 100 GRT must present 1 year of service on any waters. In order to raise the tonnage limitation to more than 100 GRT, the examination topics indicated in subpart I of this part must be completed in addition to satisfying the experience requirements of § 11.452(a) of this subpart.

(b) To obtain an endorsement for sail or auxiliary sail vessels, the applicant must submit evidence of 6 months of service on sail or auxiliary sail vessels. The required 6 months of service may have been obtained prior to issuance of the license or MMC endorsement.

§ 11.459 Requirements for domestic master or mate of rivers.

(a) An applicant for an endorsement as master of river self-propelled vessels of unlimited tonnage must meet the same service requirements as master of inland self-propelled vessels of unlimited tonnage.

(b) An applicant for an endorsement as master or mate of river self-propelled vessels, with a limitation of 25 to 1,600 GRT/3,000 GT, must meet the same service requirements as those required by this subpart for the corresponding tonnage Great Lakes and inland self-propelled endorsement. Service on the Great Lakes is not, however, required.

§ 11.462 Endorsements for domestic master or mate of uninspected fishing industry vessels.

(a) This section applies to endorsements for masters and mates of all vessels, however propelled,

navigating the high seas, which are documented to engage in the fishing industry, with the exception of:

(1) Wooden ships of primitive build;

(2) Unrigged vessels; and

(3) Vessels of less than 200 GRT/500 GT.

(b) Endorsements as master or mate of uninspected fishing industry vessels are issued for either ocean or near-coastal routes, depending on the examination completed. To qualify for an uninspected fishing industry vessel endorsement, the applicant must satisfy the training and examination requirements of § 11.201(h)(1) of this part.

(c) An applicant for an endorsement as master of uninspected fishing industry vessels must have 4 years of total service on ocean or near-coastal routes. Service on Great Lakes or inland waters may substitute for up to 2 years of the required service. One year of the required service must have been as master, mate, or equivalent position while holding a license or MMC endorsement as master, mate, master or mate (pilot) of towing vessels, or OUPV.

(1) To qualify for an endorsement for less than 500 GRT, at least 2 years of the required service, including the 1 year as master, mate or equivalent, must have been on vessels of 50 GRT or more.

(2) To qualify for an endorsement for less than 1,600 GRT/3,000 GT, at least 2 years of the required service, including the 1 year as master, mate, or equivalent, must have been on vessels of 100 GRT or more.

(3) To qualify for an endorsement for more than 1,600 GRT/3,000 GT, but not more than 5,000 GRT/GT, the vessel tonnage upon which the 4 years of required service was obtained will be used to compute the tonnage. The endorsement is limited to the maximum tonnage on which at least 25 percent of the required service was obtained or 150 percent of the maximum tonnage on which at least 50 percent of the service was obtained, whichever is higher. Limitations are in multiples of 1,000 GRT, using the next higher figure when an intermediate tonnage is calculated. An endorsement as master of uninspected fishing industry vessels authorizing service on vessels more than 1,600 GRT/3,000 GT also requires 1 year as master, mate, or equivalent on vessels of 100 GRT or more.

(4) The tonnage limitation for this endorsement may be raised using one of the following methods but cannot exceed 5,000 GRT/GT. Limitations are in multiples of 1,000 GRT, using the next higher figure when an intermediate tonnage is calculated.

(i) Three months of service as master on a vessel results in a limitation in that capacity equal to the tonnage of that vessel rounded up to the next multiple of 1,000 GRT;

(ii) Six months of service as master on a vessel results in a limitation in that capacity equal to 150 percent of the tonnage of that vessel;

(iii) Six months of service as master on vessels more than 1,600 GRT/3,000 GT results in raising the limitation to 5,000 GRT/GT;

(iv) Six months of service as mate on vessels more than 1,600 GRT/3,000 GT results in raising the limitation for master to the tonnage on which at least 50 percent of the service was obtained;

(v) Two years of service as a deckhand on a vessel while holding a license or MMC endorsement as master results in a limitation on the MMC equal to 150 percent of the tonnage of that vessel up to 5,000 GRT/GT; or

(vi) One year of service as deckhand on a vessel while holding a license or MMC endorsement as master results in a limitation on the MMC equal to the tonnage of that vessel.

(d) An applicant for an endorsement as mate of uninspected fishing industry vessels must have 3 years of total service on ocean or near-coastal routes. Service on Great Lakes or inland waters may substitute for up to 18 months of the required service.

(1) To qualify for an endorsement of less than 500 GRT, at least 1 year of the required service must have been on vessels of 50 GRT or more.

(2) To qualify for an endorsement of less than 1,600 GRT/3,000 GT, at least 1 year of the required service must have been on vessels of 100 GRT or more.

(3) To qualify for an endorsement of more than 1,600 GRT/3,000 GT, but not more than 5,000 GRT/GT, the vessel tonnage upon which the 3 years of required service was obtained will be used to compute the tonnage. The endorsement is limited to the maximum tonnage on which at least 25 percent of the required service was obtained, or 150 percent of the maximum tonnage on which at least 50 percent of the service was obtained, whichever is higher. Limitations are in multiples of 1,000 GRT, using the next higher figure when an intermediate tonnage is calculated.

(4) The tonnage limitation on this endorsement may be raised using one of the following methods, but cannot exceed 5,000 GRT/GT. Limitations are in multiples of 1,000 GRT, using the next higher figure when an intermediate tonnage is calculated.

(i) Three months of service as mate on a vessel results in a limitation in that capacity equal to the tonnage of that vessel rounded up to the next multiple of 1,000 GRT;

(ii) Six months of service as mate on a vessel results in a limitation in that capacity equal to 150 percent of the tonnage of that vessel;

(iii) Six months of service as mate on vessels more than 1,600 GRT/3,000 GT results in raising the limitation to 5,000 GRT/GT;

(iv) One year of service as deckhand on vessels more than 1,600 GRT/3,000 GT while holding a license or MMC endorsement as mate, results in raising the limitation on the MMC to 5,000 GRT/GT;

(v) Two years of service as a deckhand on a vessel while holding a license or MMC endorsed as mate results in a limitation on the MMC equal to 150 percent of the tonnage of that vessel up to 5,000 GRT/GT; or

(vi) One year of service as deckhand on a vessel while holding a license or MMC endorsement as mate results in a limitation on the MMC equal to the tonnage of that vessel.

(e) Applicants may request an oral examination on the subjects listed in subpart I of this part.

§ 11.463 General requirements for domestic endorsements as master, mate (pilot), and apprentice mate (steersman) of towing vessels.

(a) The Coast Guard issues the following endorsements for towing vessels:

(1) Master of towing vessels;

(2) Master of towing vessels, limited;

(3) Master of towing vessels, utility;

(4) Mate (pilot) of towing vessels;

(5) Apprentice mate (steersman);

(6) Apprentice mate (steersman), limited;

(7) Master of towing vessels (Harbor assist); and

(8) Apprentice mate, (steersman) utility.

(b) An endorsement as master of towing vessels means an endorsement to operate towing vessels not restricted to local areas designated by OCMIs. This also applies to a mate (pilot) of towing vessels.

(c) For this section, ''limited'' means an endorsement to operate a towing vessel of less than 200 GRT/500 GT limited to a local area within the Great Lakes, inland waters, or Western Rivers designated by the OCMI.

(d) For this section, utility towing is limited to a local area within the Great Lakes, inland or near-coastal waters, or Western Rivers designated by the OCMI.

(e) Mariners who met the training and service requirements for towing vessels before May 21, 2001 and have maintained a valid Coast Guard-issued

credential may obtain a towing endorsement if they meet the following:

(1) Demonstrate at least 90 days of towing service before May 21, 2001;

(2) Provide evidence of successfully completing the apprentice mate exam, its predecessor exam, or a superior exam; and

(3) Meet the renewal requirements in § 10.227(e)(6).

(f) Deck officers who serve on the following seagoing vessels must comply with the requirements of §§ 11.412 and 11.414 of this subpart for the appropriate STCW endorsement:

(1) A towing vessel on an ocean's voyage operating beyond near-coastal waters;

(2) A towing vessel on an international voyage; and

(3) A towing vessel of 200 GRT/500 GT or more on a domestic, near-coastal voyage.

(g) Endorsements as mate (pilot) or master of towing vessels may be issued with a restriction to specific types of towing vessels and/or towing operations such as harbor-assist or articulated tug barge (ATB) vessels that do not routinely perform all of the tasks identified in the Towing Officer Assessment Record (TOAR).

(h) The following diagram (Figure 11.463(h)) illustrates the towing officer endorsement structure, including crossover points. The section numbers on the diagram refer to the specific requirements applicable.

BILLING CODE 9110–04–P

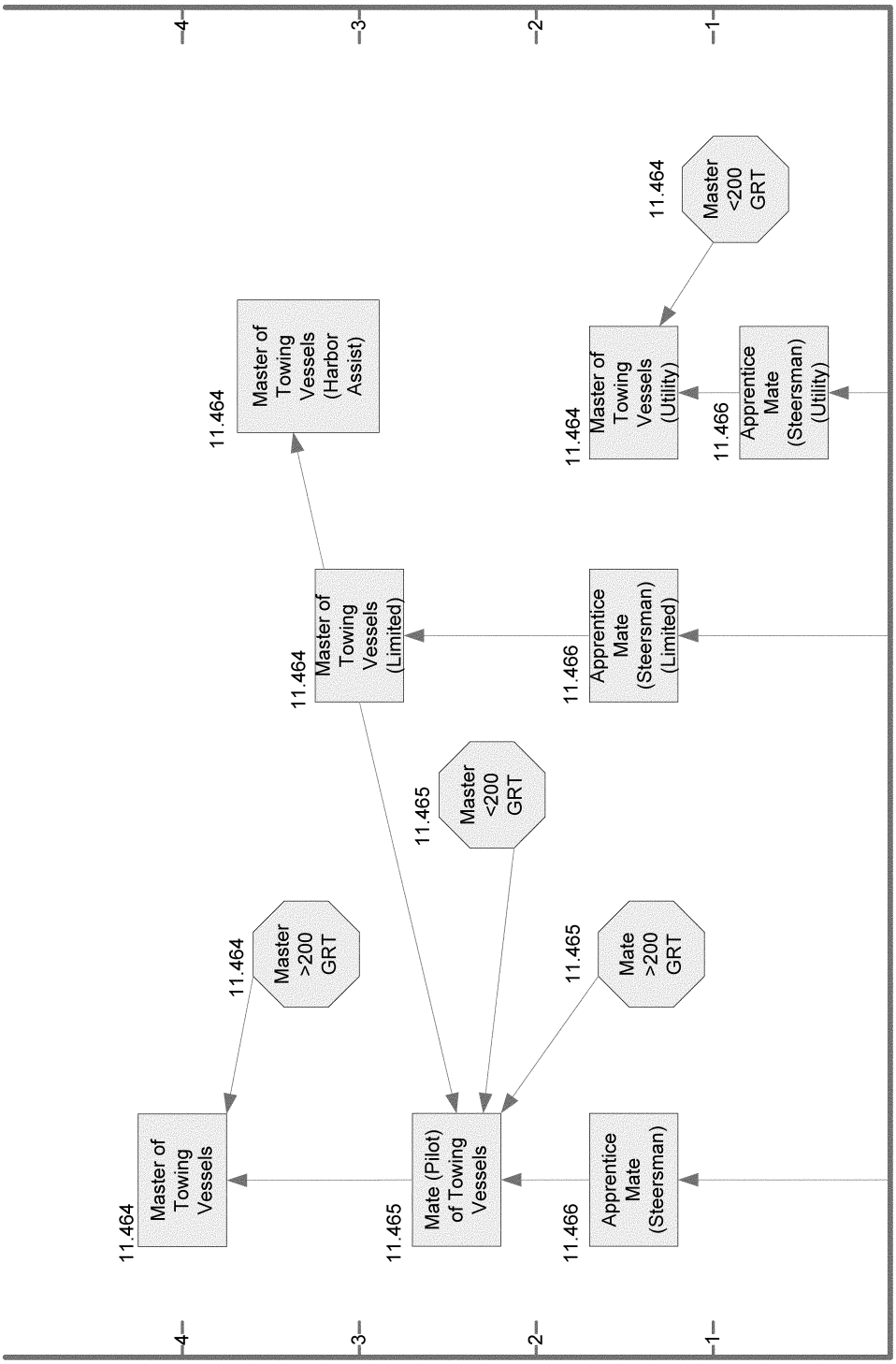

Figure 11.463(h) Structure of towing officer endorsements.

BILLING CODE 9110–04–C

§ 11.464 Requirements for domestic endorsements as master of towing vessels.

(a) If you would like to obtain an endorsement as master of towing vessels with a route listed in column 1 of Table 11.464(a) of this section, then you must complete the service requirements indicated in columns 2 through 5. You may serve on the subordinate routes listed in column 5 without further endorsement.

TABLE 11.464(a)—REQUIREMENTS FOR ENDORSEMENT AS MASTER OF TOWING VESSELS [1]

Route endorsed	Total service [2]	TOS [3] on T/V as mate (pilot) [4]	TOS [3] on particular route	Sub-ordinate route authorized
1	2	3	4	5
Oceans (O)	48	18	3	NC, GL–I.
Near-Coastal (NC)	48	18	3	GL–I.
Great Lakes—Inland (GL–I)	48	18	3	None.
Western Rivers (WR)	48	18	3	None.

[1] The holder of an endorsement as master of towing vessels may have an endorsement—as mate (pilot) of towing vessels for a route superior to the current route on which the holder has no operating experience—placed on the MMC after passing an examination for that additional route. After the holder completes 90 days of experience and completes a Towing Officer Assessment Record (TOAR) on that route, the Coast Guard will add it to the holder's endorsement as master of towing vessels and remove the endorsement for mate (pilot) of towing vessels.
[2] Service is in months.
[3] TOS is time of service.
[4] A maximum of 6 months of harbor assist can be used to qualify as mate (pilot).

(b) A person holding this endorsement may qualify for an STCW endorsement, according to §§ 11.307, 11.311, 11.313, and 11.315 of this part.

(c) To obtain an endorsement as master of towing vessels (limited), applicants must complete the requirements listed in columns 2 through 5 of Table 11.464(c) of this section.

TABLE 11.464(c)—REQUIREMENTS FOR ENDORSEMENT AS MASTER OF TOWING VESSELS

[Limited]

Route endorsed	Total service [1]	TOS [2] on T/V as limited apprentice mate (steersman)	TOAR or an approved course	TOS [2] on particular route
1	2	3	4	5
Limited Local Area (LLA)	36	18	Yes	3

[1] Service is in months.
[2] TOS is time of service.

(d) To obtain an endorsement as master of towing vessels (harbor assist), applicants must hold an endorsement as master of towing vessel (limited) officer endorsement and complete the requirements in columns 2–5 of Table 11.464(d) of this section.

TABLE 11.464(d)—REQUIREMENTS FOR ENDORSEMENT AS MASTER OF TOWING VESSELS

[Harbor Assist]

Route endorsed	Current endorsement status	Total service [1]	TOS [2] on TV as Master (LLA)	TOAR or an approved course
1	2	3	4	5
Harbor Assist (LLA)	Master (LLA)	3	3	Yes.

[1] Service is in months.
[2] TOS is time of service.

(e) To obtain an endorsement as master of towing vessels (utility), applicants must complete the requirements listed in columns 2 through 5 of Table 11.464(e) of this section.

TABLE 11.464(e)—REQUIREMENTS FOR ENDORSEMENT AS MASTER OF TOWING VESSELS

[Utility]

Route endorsed	Current endorsement status	Total service [1]	TOS [2] on T/V as apprentice (steersman) utility	TOAR or an approved course
1	2	3	4	5
Limited Local Area (LLA)	Apprentice utility	18	12	Yes.

TABLE 11.464(e)—REQUIREMENTS FOR ENDORSEMENT AS MASTER OF TOWING VESSELS—Continued

[Utility]

Route endorsed	Current endorsement status	Total service [1]	TOS [2] on T/V as apprentice (steersman) utility	TOAR or an approved course
1	2	3	4	5
Limited Local Area (LLA)	Master Steam/Motor vessels less than 200 GRT.	12	0	Yes plus exam.

[1] Service is in months.
[2] TOS is time of service.

(f) Those holding a license or MMC endorsement as mate (pilot) of towing vessels, may have master of towing vessels (limited) added to their MMC for a limited local area within the scope of their current route.

(g) Before serving as master of towing vessels on the Western Rivers, mariners must possess 90 days of observation and training and their MMC must include an endorsement for Western Rivers.

(h) Each company must maintain evidence that every vessel it operates is under the direction and control of a mariner with the appropriate endorsement and experience, including 30 days of observation and training on the intended route other than Western Rivers.

(i) Those holding a license or MMC endorsement as a master of self-propelled vessels of more than 200 GRT/500 GT, may operate towing vessels within any restrictions on their endorsement if they:

(1) Have a minimum of 30 days of training and observation on towing vessels for the route being assessed, except as noted in paragraph (h) of this section; and

(2) Either:

(i) Hold a completed Towing Officer Assessment Record (TOAR) described in § 10.404(c) of this subchapter that shows evidence of assessment of practical demonstration of skills; or

(ii) Complete an approved training course.

(j) A license or MMC does not need to include a towing endorsement if mariners hold a TOAR or complete an approved training course.

§ 11.465 Requirements for domestic endorsements as mate (pilot) of towing vessels.

(a) To obtain an endorsement as mate (pilot) of towing vessels endorsed with a route listed in column 1 of Table 11.465(a) of this section, applicants must complete the service in columns 2 through 5. Mariners holding a license or MMC endorsement as master of towing vessels (limited) wishing to upgrade it to mate (pilot) of towing vessels must complete the service in columns 5 and 6. An endorsement with a route endorsed in column 1 authorizes service on the subordinate routes listed in column 7 without further endorsement. Time of service requirements as an apprentice mate (steersman) of towing vessels may be reduced by an amount equal to the time specified in the approval letter for the completed Coast Guard-approved training programs.

TABLE 11.465(a)—REQUIREMENTS FOR ENDORSEMENT AS MATE (PILOT [1]) OF TOWING VESSELS

Route endorsed	Total service [2]	TOS [3] on T/V as apprentice mate (steersman) [5]	TOS [3] on particular route	TOAR [4] or an approved course	30 days of observation and training while holding master (limited) and pass an examination	Subordinate route authorized
1	2	3	4	5	6	7
Oceans (O)	30	12	3	Yes	Yes	NC, GL–I.
Near-Coastal (NC)	30	12	3	Yes	Yes	GL–I.
Great Lakes-Inland (GL–I)	30	12	3	Yes	Yes	
Western Rivers (WR)	30	12	3	Yes	No (90 days service required).	

[1] For all inland routes, as well as Western Rivers, the endorsement as pilot of towing vessels is equivalent to that as mate of towing vessels. All qualifications and equivalencies are the same.
[2] Service is in months unless otherwise indicated.
[3] TOS is time of service.
[4] TOAR is a Towing Officer Assessment Record completed within the previous 5 years.
[5] Time of service requirements as an apprentice mate (steersman) of towing vessels may be reduced by an amount equal to the time specified in the approval letter for a completed Coast Guard-approved training program.

(b) Before serving as mate (pilot) of towing vessels on the Western Rivers, mariners must possess 90 days of observation and training and have your MMC include an endorsement for Western Rivers.

(c) Each company must maintain evidence that every vessel it operates is under the direction and control of a mariner with the appropriate endorsement and experience, including 30 days of observation and training on the intended route other than Western Rivers.

(d) Those holding a license or MMC endorsement as a mate of inspected, self-propelled vessels of more than 200 GRT/500 GT or one as first-class pilot, may operate towing vessels within any restrictions on their credential if they:

(1) Have a minimum of 30 days of training and observation on towing vessels for the route being assessed,

except as noted in paragraph (b) of this section; and

(2) Hold a completed Towing Officer Assessment Record (TOAR) described in § 10.404(c) of this subchapter that shows evidence of assessment of practical demonstration of skills.

(e) A or MMC does not need to include a towing endorsement if you hold a TOAR or a course completion certificate.

(f) Those holding any endorsement as a master of self-propelled vessels of any tonnage that is less than 200 GRT, except for the limited masters endorsements specified in §§ 11.429 and 11.456 of this subpart, may obtain an endorsement as mate (pilot) of towing vessels by meeting the following requirements:

(1) Providing proof of 36 months of service as a master under the authority of an endorsement described in this paragraph;

(2) Successfully completing the appropriate TOAR;

(3) Successfully completing the appropriate apprentice mate exam; and

(4) Having a minimum of 30 days of training and observation on towing vessels for the route being assessed, except as noted in paragraph (b) of this section.

(g) An approved training course for mate (pilot) of towing vessels must include formal instruction and practical demonstration of proficiency either onboard a towing vessel or at a shoreside training facility before a designated examiner, and must cover the material (dependent upon route) required by Table 11.910–2 in § 11.910 of this part for apprentice mate (steersman), towing vessels on ocean and near-coastal routes; apprentice mate (steersman), towing vessels on Great Lakes and inland routes; or steersman, towing vessels on Western Rivers routes.

(h) A person holding this endorsement may qualify for an STCW endorsement, according to §§ 11.309, 11.317, 11.319, and 11.321 of this part.

§ 11.466 Requirements for domestic endorsements as apprentice mate (steersman) of towing vessels.

(a) As Table 11.466(a) shows, to obtain an endorsement as apprentice mate (steersman) of towing vessels listed in column 1, endorsed with a route listed in column 2, mariners must complete the service requirements indicated in columns 3 through 6.

TABLE 11.466(a)—REQUIREMENTS FOR ENDORSEMENT AS APPRENTICE MATE (STEERSMAN) OF TOWING VESSELS

Endorsement	Route endorsed	Total service [1]	TOS [2] on T/V	TOS [2] on particular route	Pass examination [3]
1	2	3	4	5	6
Apprentice Mate (Steersman)	Oceans (0)	18	12	3	Yes.
	Near-Coastal (NC)	18	12	3	Yes.
	Great Lakes	18	12	3	Yes.
	Inland (GL–I)	18	12	3	Yes.
	Western Rivers (WR)	18	12	3	Yes.
Apprentice Mate (Steersman) (Limited).	Not Applicable	18	12	3	Yes.

[1] Service is in months.
[2] TOS is time of service.
[3] The examination for apprentice mate is specified in subpart I of this part.
[4] For all inland routes, as well as Western Rivers, the endorsement as steersman is equivalent to that as apprentice mate. All qualifications and equivalencies are the same.

(b) Those holding a license or endorsement as apprentice mate (steersman) of towing vessels, may obtain a restricted endorsement as apprentice mate (steersman) (limited). This endorsement will go on the mariner's MMC after passing an examination for a route that is not included in the current endorsements and on which the mariner has no operating experience. Upon completion of 3 months of experience on that route, mariners may have the restriction removed.

(c) To obtain an endorsement as apprentice mate (steersman) of towing vessels (utility), mariners must complete the requirements listed in columns 2 through 5 of Table 11.466(c) of this section.

TABLE 11.466(c)—REQUIREMENTS FOR ENDORSEMENT AS APPRENTICE (STEERSMAN) OF TOWING VESSELS

[Utility]

Route endorsed	Current endorsement status	Total service [1]	TOS [2] on T/V or assistance towing vessel	Exam (utility)
1	2	3	4	5
Limited Local Area (LLA)	None	6	6	Yes.
Limited Local Area (LLA)	OUPV	6	6	Yes.

[1] Service is in months.
[2] TOS is time of service.

§ 11.467 Requirements for a domestic endorsement as operator of uninspected passenger vessels of less than 100 GRT.

(a) This section applies to an applicant for the endorsement to operate an uninspected vessel of less than 100 GRT, equipped with propulsion machinery of any type, carrying six or fewer passengers.

(b) A domestic endorsement as OUPV for near-coastal waters limits the holder to service on domestic, near-coastal waters not more than 100 miles offshore, the Great Lakes, and all inland

waters. Endorsements issued for inland waters include all inland waters except the Great Lakes. Endorsements may be issued for a particular local area under paragraph (f) or paragraph (g) of this section.

(c) For an endorsement as OUPV on near-coastal waters, an applicant must have a minimum of 12 months of experience in the operation of vessels, including at least 3 months of service on vessels operating on ocean or near-coastal waters.

(d) For an endorsement as OUPV on the Great Lakes and inland waters, an applicant must have 12 months of service on Great Lakes or inland waters, including at least 3 months of service operating vessels on Great Lakes waters.

(e) For an endorsement as OUPV on inland waters, an applicant must have a minimum of 12 months of experience in the operation of vessels.

(f) A limited OUPV endorsement may be issued to an applicant to be employed by organizations such as formal camps, yacht clubs, educational institutions, and marinas. An endorsement issued under this paragraph will be limited to the specific activity and the locality of the camp, yacht club, or marina. In order to obtain this restricted endorsement, an applicant must:

(1) Have 3 months of service in the operation of the type of vessel for which the endorsement is requested;

(2) Satisfactorily complete a safe-boating course approved by the National Association of State Boating Law Administrators, or those public education courses conducted by the U.S. Power Squadron or the American National Red Cross, or a Coast Guard-approved course; and

(3) Pass an examination appropriate for the activity to be conducted and the route authorized.

(g) The first aid and cardiopulmonary resuscitation (CPR) course certificates required by § 11.201(i) of this part will only be required when, in the opinion of the Coast Guard, the geographic area over which service is authorized precludes obtaining medical services within a reasonable time.

(h) Restricted OUPV endorsements may be issued to applicants to be employed on inland navigable waters. An endorsement under this paragraph will be limited to specific bodies of water that have been approved by the cognizant OCMI. In order to obtain this endorsement, the applicant must be qualified for the endorsement under this section; however, the OCMI may modify the service and examination requirements as follows:

(1) At least 3 months of service in the operation of the type of vessel and on each body of water for which the endorsement is requested; and

(2) Satisfactorily pass an examination appropriate for the activity to be conducted and the waters authorized.

(i) An applicant for an officer endorsement as OUPV who speaks Spanish, but not English, may be issued an officer endorsement restricted to the navigable waters of the United States in the vicinity of Puerto Rico.

§ 11.468 Domestic officer endorsements for mobile offshore drilling units (MODUs).

Officer endorsements for service on mobile offshore drilling units (MODUs) authorize service on units of unlimited tonnage upon ocean waters while on location or while underway, as restricted on the endorsement, except when moving independently under their own power.

§ 11.470 Domestic officer endorsements as offshore installation manager.

(a) Officer endorsements as offshore installation manager (OIM) include:

(1) OIM Unrestricted;

(2) OIM Surface Units on Location;

(3) OIM Surface Units Underway;

(4) OIM Bottom Bearing Units on Location; or

(5) OIM Bottom Bearing Units Underway.

(b) To qualify for an endorsement as OIM unrestricted, an applicant must:

(1) Present evidence of the following experience:

(i) Four years of employment assigned to MODUs, including at least 1 year of service as driller, assistant driller, toolpusher, assistant toolpusher, barge supervisor, mechanical supervisor, electrician, crane operator, ballast control operator, or equivalent supervisory position on MODUs, with a minimum of 14 days of that supervisory service on surface units; or

(ii) A degree from a program in engineering or engineering technology which is accredited by the Accreditation Board for Engineering and Technology (ABET). The National Maritime Center will give consideration to accepting education credentials from programs having other than ABET accreditation. An applicant qualifying through a degree program must also have at least 168 days of service as driller, assistant driller, toolpusher, assistant toolpusher, barge supervisor, mechanical supervisor, electrician, crane operator, ballast control operator, or equivalent supervisory position on MODUs, with a minimum of 14 days of that supervisory service on surface units;

(2) Present evidence of training course completion as follows:

(i) A certificate from a Coast Guard-approved stability course approved for OIM unrestricted;

(ii) A certificate from a Coast Guard approved survival suit and survival craft training course;

(iii) Documentation consistent with those required by the Bureau of Ocean Energy Management Regulation and Enforcement (BOEMRE) demonstrating that the applicant has completed training in well control and blowout prevention necessary to perform the duties of an OIM; and

(iv) A certificate from a firefighting training course as required by § 11.201(h) of this part; and

(3) Provide a recommendation signed by a senior company official which:

(i) Provides a description of the applicant's experience and qualifications;

(ii) Certifies that the individual has successfully directed, while under the supervision of an experienced rig mover, two rig moves each of surface units and of bottom bearing units; and

(iii) Certifies that one of the rig moves required under paragraph (b)(3)(ii) of this section was completed within 1 year preceding date of application.

(c) An applicant for an endorsement as OIM unrestricted who holds an unlimited license or MMC endorsement as master or chief mate must satisfy the requirements in paragraphs (b)(2) and (b)(3) of this section and have at least 84 days of service on surface units and at least 28 days of service on bottom bearing units.

(d) To qualify for an endorsement as OIM surface units on location, an applicant must:

(1) Present evidence of the following experience:

(i) Four years of employment assigned to MODUs, including at least 1 year of service as driller, assistant driller, toolpusher, assistant toolpusher, barge supervisor, mechanical supervisor, electrician, crane operator, ballast control operator, or equivalent supervisory position on MODUs, with a minimum of 14 days of that supervisory service on surface units; or

(ii) A degree from a program in engineering or engineering technology which is accredited by ABET. The National Maritime Center will give consideration to accepting education credentials from programs having other than ABET accreditation. An applicant qualifying through a degree program must also have at least 168 days of service as driller, assistant driller, toolpusher, assistant toolpusher, barge supervisor, mechanical supervisor, electrician, crane operator, ballast control operator, or equivalent

supervisory position of MODUs, with a minimum of 14 days of that supervisory service on surface units; and

(2) Present evidence of training course completion as follows:

(i) A certificate from a Coast Guard-approved stability course approved for a license or MMC endorsement as OIM surface units;

(ii) A certificate from a Coast Guard-approved survival suit and survival craft training course;

(iii) A letter or certificate from the applicant's employer or a training provider certifying that the applicant has completed well control and blowout prevention training necessary to perform the duties of an OIM; and

(iv) A certificate from a firefighting training course as required by § 11.201(h) of this part.

(e) An applicant for an endorsement as OIM surface units on location who holds an unlimited license or MMC endorsement as master or chief mate must satisfy the requirements of paragraph (d)(2) of this section and have at least 84 days of service on surface units.

(f) To qualify for an endorsement as OIM surface units underway, an applicant must:

(1) Provide the following:

(i) Evidence of the experience described in paragraph (d)(1) of this section and a recommendation signed by a senior company official which:

(A) Provides a description of the applicant's experience and qualifications;

(B) Certifies that the individual has successfully directed, while under the supervision of an experienced rig mover, three rig moves of surface units; and

(C) Certifies that one of the rig moves required under paragraph (f)(1)(i)(B) of this section was completed within 1 year preceding date of application; or

(ii) A recommendation signed by a senior company official which:

(A) Provides a description of the applicant's experience and company qualifications program completed;

(B) Certifies that the applicant has witnessed ten rig moves either as an observer in training or as a rig mover under supervision;

(C) Certifies that the individual has successfully directed, while under the supervision of an experienced rig mover, five rig moves of surface units; and

(D) Certifies that one of the rig moves required under paragraph (f)(1)(ii)(C) of this section was completed within 1 year preceding the date of application; and

(2) Present evidence of training course completion as follows:

(i) A certificate from a Coast Guard-approved stability course approved for an OIM surface units endorsement;

(ii) A certificate from a Coast Guard-approved survival suit and survival craft training course; and

(iii) A certificate from a firefighting training course as required by § 11.201(h) of this part.

(g) An applicant for endorsement as OIM surface units underway who holds an unlimited license or MMC endorsement as master or chief mate must satisfy the requirements in paragraph (f)(2) of this section and provide a company recommendation signed by a senior company official which:

(1) Provides a description of the applicant's experience and qualifications;

(2) Certifies that the individual has successfully directed, while under the supervision of an experienced rig mover, three rig moves on surface units; and

(3) Certifies that one of the rig moves required under paragraph (g)(2) of this section was completed within 1 year preceding the date of application.

(h) To qualify for an endorsement as OIM bottom bearing units on location, an applicant must:

(1) Present evidence of the following experience:

(i) Four years of employment assigned to MODUs, including at least 1 year of service as driller, assistant driller, toolpusher, assistant toolpusher, barge supervisor, mechanical supervisor, electrician, crane operator, ballast control operator, or equivalent supervisory position on MODUs; or

(ii) A degree from a program in engineering or engineering technology that is accredited by ABET. The National Maritime Center will give consideration to accepting education credentials from programs having other than ABET accreditation. An applicant qualifying through a degree program must also have at least 168 days of service as driller, assistant driller, toolpusher, assistant toolpusher, barge supervisor, mechanical supervisor, electrician, crane operator, ballast control operator, or equivalent supervisory position on MODUs; and

(2) Present evidence of training course completion as follows:

(i) A certificate from a Coast Guard-approved survival suit and survival craft training course;

(ii) A letter or certificate from the applicant's employer or a training provider certifying that the applicant has completed well control and blowout prevention training necessary to perform the duties of an OIM; and

(iii) A certificate from a firefighting training course as required by § 11.201(h) of this part.

(i) An applicant for an endorsement as OIM bottom bearing units on location who holds an unlimited license or MMC endorsement as master or chief mate must satisfy paragraph (h)(2) of this section and have at least 28 days of service on bottom bearing units.

(j) To qualify for an endorsement as OIM bottom bearing units underway, an applicant must:

(1) Provide the following:

(i) Evidence of the experience described in paragraph (h)(1) of this section with a recommendation signed by a senior company official which:

(A) Provides a description of the applicant's experience and qualifications;

(B) Certifies that the individual has successfully directed, while under the supervision of an experienced rig mover, three rig moves of bottom bearing units; and

(C) Certifies that one of the rig moves required under paragraph (j)(1)(i)(B) of this section was completed within 1 year preceding date of application; or

(ii) A recommendation signed by a senior company official which:

(A) Provides a description of the applicant's experience and company qualifications program completed;

(B) Certifies that the applicant has witnessed ten rig moves either as an observer in training or as a rig mover under supervision;

(C) Certifies that the individual has successfully directed, while under the supervision of an experienced rig mover, five rig moves of bottom bearing units; and

(D) Certifies that one of the rig moves required under paragraph (j)(1)(ii)(C) of this section was completed within 1 year preceding date of application; and

(2) Present evidence of training course completion as follows:

(i) A certificate from a Coast Guard-approved stability course approved for a license or MMC endorsement as OIM bottom bearing units;

(ii) A certificate from a Coast Guard-approved survival suit and survival craft training course; and

(iii) A certificate from a firefighting training course as required by § 11.201(h) of this part.

(k) An applicant for endorsement as OIM bottom bearing units underway who holds an unlimited license or MMC endorsement as master or chief mate must satisfy the requirements in paragraph (j)(2) of this section and provide a company recommendation signed by a senior company official, which:

(1) Provides a description of the applicant's experience and qualifications;

(2) Certifies that the individual has successfully directed, while under the supervision of an experienced rig mover, three rig moves of bottom bearing units; and

(3) Certifies that one of the rig moves required under paragraph (k)(2) of this section was completed within 1 year preceding the date of application.

§ 11.472 Domestic officer endorsements as barge supervisor.

(a) To qualify for an endorsement as barge supervisor (BS), an applicant must:

(1) Present evidence of the following experience:

(i) Three years of employment assigned to MODUs, including at least 168 days of service as driller, assistant driller, toolpusher, assistant tool pusher, mechanic, electrician, crane operator, subsea specialist, ballast control operator, or equivalent supervisory position on MODUs. At least 84 days of that service must have been as a ballast control operator or barge supervisor trainee; or

(ii) A degree from a program in engineering or engineering technology that is accredited by the Accreditation Board for Engineering and Technology (ABET). The National Maritime Center will give consideration to accepting education credentials from programs having other than ABET accreditation. An applicant qualifying through a degree program must also have at least 168 days of service as driller, assistant driller, toolpusher, assistant toolpusher, mechanic, electrician, crane operator, subsea specialist, ballast control operator, or equivalent supervisory position on MODUs. At least 84 days of that service must have been as a ballast control operator or barge supervisor trainee; and

(2) Present evidence of training course completion as follows:

(i) A certificate from a Coast Guard-approved stability course approved for barge supervisor;

(ii) A certificate from a Coast Guard-approved survival suit and survival craft training course; and

(iii) A certificate from a firefighting training course as required by § 11.201(h) of this part.

(b) An applicant for an endorsement as barge supervisor who holds an unlimited license or MMC endorsement as master or mate must satisfy the requirements in paragraph (a)(2) of this section and have at least 84 days of service as ballast control operator or barge supervisor trainee.

§ 11.474 Domestic officer endorsements as ballast control operator.

(a) To qualify for an endorsement as ballast control operator (BCO), an applicant must:

(1) Present evidence of the following experience:

(i) One year of employment assigned to MODUs, including at least 28 days of service as a trainee under the supervision of an individual holding a license or MMC endorsement as ballast control operator; or

(ii) A degree from a program in engineering or engineering technology that is accredited by the Accreditation Board for Engineering and Technology (ABET). The National Maritime Center will give consideration to accepting education credentials from programs having other than ABET accreditation. An applicant qualifying through a degree program must also have at least 28 days of service as a trainee under the supervision of an individual holding a license or MMC endorsement as ballast control operator; and

(2) Present evidence of training course completion as follows:

(i) A certificate from a Coast Guard-approved stability course approved for barge supervisor or ballast control operator;

(ii) A certificate from a Coast Guard-approved survival suit and survival craft training course; and

(iii) A certificate from a firefighting training course as required by § 11.201(h) of this part.

(b) An applicant for an endorsement as BCO who holds an unlimited license or MMC endorsement as master, mate, chief engineer, or assistant engineer must satisfy the requirements in paragraph (a)(2) of this section and have at least 28 days of service as a trainee under the supervision of an individual holding an endorsement as BCO.

§ 11.480 Radar observer.

(a) This section contains the requirements that an applicant must meet to qualify as a radar observer (part 15 of this subchapter specifies who must qualify as a radar observer).

(b) If an applicant meets the requirements of this section, one of the following radar observer endorsements will be added to his or her MMC:

(1) Radar observer (unlimited).

(2) Radar observer (inland waters and Gulf Intercoastal waterways (GIWW)).

(3) Radar observer (rivers).

(c) Radar observer (unlimited) is valid on all waters. Radar observer (inland waters and GIWW) is valid only for those waters other than the Great Lakes covered by the Inland Navigational Rules. Radar observer (rivers) is valid only on any river, canal, or similar body of water designated by the OCMI, but not beyond the boundary line.

(d) Except as provided by paragraph (e) of this section, each applicant for a radar observer endorsement or for renewal of an endorsement must complete the appropriate course approved by the Coast Guard, receive the appropriate certificate of training, and present the certificate to the Coast Guard.

(e) A radar observer endorsement issued under this section is valid for 5 years from the date of issuance of the certificate of training from a course approved by the Coast Guard.

(f) A mariner may maintain the validity of a radar observer endorsement by completing a refresher or re-certification course approved for that purpose.

(g) An applicant for renewal of a license or MMC that does not need a radar observer endorsement may renew without meeting the requirements for the endorsement. However, a radar endorsement will not be placed on the MMC unless the mariner submits a course completion certificate from an approved radar course.

(h) An applicant seeking to raise the grade of a license or MMC endorsement or increase its scope, where the increased grade or scope requires a radar observer certificate, may use an expired certificate to fulfill that requirement. However, a radar endorsement will not be placed on the MMC unless the mariner submits a course completion certificate from an approved radar course.

§ 11.482 Assistance towing.

(a) This section contains the requirements to qualify for an endorsement authorizing a mariner to engage in assistance towing. Except as noted in this paragraph, holders of MMC officer and OUPV endorsements must have an assistance towing endorsement to engage in assistance towing. Holders of endorsements as master or mate (pilot) of towing vessels or master or mate endorsements authorizing service on inspected vessels of 200 GRT/500 GT or more do not need the assistance towing endorsement.

(b) An applicant for an assistance towing endorsement must pass a written examination or complete a Coast Guard-approved course demonstrating his or her knowledge of assistance towing safety, equipment, and procedures.

(c) The holder of a license or MMC for master, mate, or operator endorsed for assistance towing is authorized to engage in assistance towing on any

vessel within the scope of the license or MMC.

(d) The period of validity of the endorsement is the same as the license or MMC on which it is included, and it may be renewed with the MMC.

§ 11.491 Domestic officer endorsements for service on offshore supply vessels.

Each officer endorsement for service on offshore supply vessels (OSVs) authorizes service on OSVs as defined in 46 U.S.C. 2101(19) and as interpreted under 46 U.S.C. 14104(b), subject to any restrictions placed on the license or MMC.

§ 11.493 Master (OSV).

(a) An endorsement for service on an offshore supply vessel (OSV) may be issued as master. To qualify for a domestic endorsement for service as master (OSV), an applicant must:

(1) Meet the requirements for an STCW endorsement, according to § 11.305 of this part; and

(2) Complete the appropriate examination described in subpart I of this part.

(b) A person holding an endorsement as master (OSV) qualifies for an STCW endorsement, according to §§ 11.305 and 11.311 of this part.

§ 11.495 Chief Mate (OSV).

(a) An endorsement for service on an offshore supply vessel (OSV) may be issued as chief mate. To qualify for a domestic endorsement for service as chief mate (OSV), an applicant must:

(1) Meet the requirements for an STCW endorsement, according to § 11.307 of this part; and

(2) Complete the appropriate examination described in subpart I of this part.

(b) A person holding an endorsement as chief mate (OSV) qualifies for an STCW endorsement, according to §§ 11.307 and 11.313 of this part.

§ 11.497 Mate (OSV).

(a) An endorsement for service on an offshore supply vessel (OSV) may be issued as mate. To qualify for a domestic endorsement for service as mate (OSV), an applicant must:

(1) Meet the requirements for an STCW endorsement, according to § 11.309 of this part; and

(2) Complete the appropriate examination described in subpart I of this part.

(b) A person holding an endorsement as mate (OSV) qualifies for an STCW endorsement, according to § 11.309 of this part.

Subpart E—Professional Requirements for Domestic Engineer Officer Endorsements

§ 11.501 Grades and types of domestic engineer endorsements issued.

(a) Domestic engineer endorsements are issued in the grades of:

(1) Chief engineer;
(2) First assistant engineer;
(3) Second assistant engineer;
(4) Third assistant engineer;
(5) Chief engineer (limited);
(6) Assistant engineer (limited);
(7) Designated duty engineer;
(8) Chief engineer uninspected fishing industry vessels;
(9) Assistant engineer uninspected fishing industry vessels;
(10) Chief engineer (MODU);
(11) Assistant engineer (MODU);
(12) Chief engineer (OSV); and
(13) Engineer (OSV).

(b) Engineer endorsements issued in the grades of chief engineer (limited) and assistant engineer (limited) of steam, motor, and/or gas turbine-propelled vessels allow the holder to serve within any propulsion power limitations on vessels of unlimited tonnage on inland waters and of less than 1,600 GRT/3,000 GT in ocean, near-coastal, or Great Lakes service in the following manner:

(1) Assistant engineer (limited—oceans) may serve on ocean waters;

(2) Chief engineer (limited—near-coastal) may serve on near-coastal waters; and

(3) Chief engineer (limited—oceans) may serve on ocean waters.

(c) Engineer licenses or MMC endorsements issued in the grades of designated duty engineer of steam, motor, and/or gas turbine-propelled vessels allow the holder to serve within stated propulsion power limitations on vessels of less than 500 GRT in the following manner:

(1) Designated duty engineers limited to vessels of less than 1,000 HP or 4,000 HP may serve only on near-coastal or inland waters; and

(2) Designated duty engineers—unlimited may serve on any waters.

(d) An engineer officer's license or MMC endorsement authorizes service on steam, motor, or gas turbine-propelled vessels or may authorize all modes of propulsion.

(e) A person holding an engineer license or MMC endorsement that is restricted to near-coastal waters may serve within the limitations of the license or MMC upon near-coastal, Great Lakes, and inland waters.

§ 11.502 General requirements for domestic engineer endorsements.

(a) For all original and raise of grade of engineer endorsements, at least one-third of the minimum service requirements must have been obtained on the particular mode of propulsion for which applied.

(b) If an applicant desires to add a propulsion mode (steam, motor, or gas turbine) to his or her endorsement, the following alternative methods, while holding a license or MMC officer endorsement in that grade, are acceptable:

(1) Four months of service as an observer on vessels of the new propulsion mode;

(2) Four months of service as an engineer officer at the operational level on vessels of the new propulsion mode;

(3) Six months of service as oiler, watertender, or junior engineer on vessels of the new propulsion mode; or

(4) Completion of a Coast Guard-approved training course for this endorsement.

(c) Merchant Mariner Credential (MMC) officer endorsements issued in accordance with §§ 11.510, 11.512, 11.514, 11.516, 11.518, 11.520, 11.522, and 11.524 of this subpart for motor or gas turbine propulsion modes may be endorsed as limited to serve on vessels without auxiliary boilers, waste-heat boilers, or distilling plants. An applicant may qualify for removal of any of these limitations by completing Coast Guard-approved or -accepted training.

§ 11.503 Propulsion power limitations for domestic endorsements.

(a) Engineer endorsements of all grades and types may be subject to propulsion power limitations. Other than as provided in § 11.524 of this subpart for the designated duty engineer (DDE), the propulsion power limitation placed on a license or MMC endorsement is based on the applicant's qualifying experience considering the total shaft propulsion power of each vessel on which the applicant has served.

(b) When an applicant for an original or raise of grade of an engineer endorsement, other than a DDE, has not obtained at least 50 percent of the required experience on vessels of 4,000 or more horsepower, a horsepower limitation is placed on the MMC based on the applicant's qualifying experience. The endorsement is limited to the maximum propulsion power on which at least 25 percent of the required experience was obtained, or 150 percent of the maximum propulsion power on which at least 50 percent of the service was obtained, whichever is higher. Limitations are in multiples of 1,000 HP/750 kW, using the next higher figure when an intermediate horsepower is

calculated. When the limitation as calculated equals or exceeds 10,000 HP/7,500 kW, an unlimited horsepower endorsement is issued.

(c) The following service on vessels of 4,000 HP/3,000 kW or more will be considered qualifying for raising or removing the propulsion power limitations placed on an engineer endorsement:

(1) Six months of service in the highest-grade endorsed: removal of all propulsion power limitations.

(2) Six months of service as an engineer officer in any capacity other than the highest grade for which the applicant is licensed or endorsed: removal of all propulsion power limitations for the grade in which service is performed and raise to the next higher grade endorsement to the propulsion power of the vessel on which service was performed. The total cumulative service before and after issuance of the limited engineer endorsement may be considered in removing all propulsion power limitations.

(3) Twelve months of service as oiler or junior engineer while holding a license or MMC endorsement as third assistant engineer or assistant engineer (limited oceans): removal of all propulsion power limitations on third assistant engineer or assistant engineer's (limited oceans) endorsement.

(4) Six months of service as oiler or junior engineer while holding a license or MMC endorsement as second assistant engineer: removal of all propulsion power limitations on third assistant engineer's endorsement.

(d) Raising or removing propulsion power limitations based on service required by paragraph (c) of this section may be granted without further written examination, if the Coast Guard considers further examination unnecessary.

§ 11.504 Application of deck service for domestic limited engineer endorsements.

Service gained in the deck department on vessels of appropriate tonnage may substitute for up to 25 percent or 6 months, whichever is less, of the service requirement for an endorsement as chief engineer (limited), assistant engineer (limited), or DDE.

§ 11.505 Domestic engineer officer endorsements.

(a) The following diagram illustrates the domestic engineering endorsement structure, including crossover points.

BILLING CODE 91108–04–P

Figure 11.505(a): Structure of domestic engineer officer endorsements for non-seagoing service

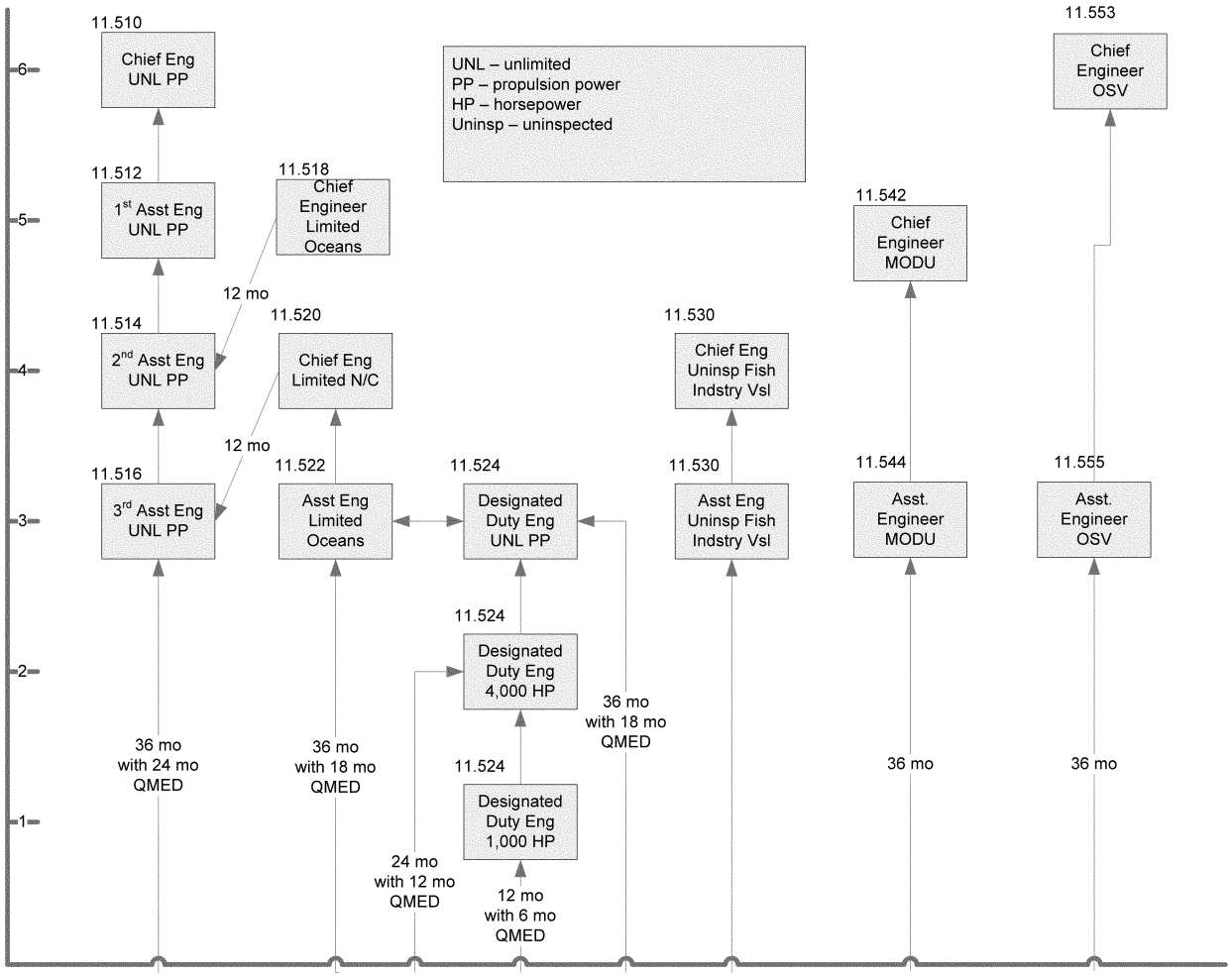

BILLING CODE 91108–04–C

(b) [Reserved]

§ 11.510 Service requirements for domestic endorsement as chief engineer of steam, motor, and/or gas turbine-propelled vessels.

(a) The minimum service required to qualify an applicant for endorsement as chief engineer of steam, motor, and/or gas turbine-propelled vessels is:

(1) One year of service as first assistant engineer; or

(2) One year of service while holding a license or MMC endorsement as first assistant engineer. A minimum of 6 months of this service must have been as first assistant engineer. Service as an assistant engineer is accepted on a two-for-one basis to a maximum of 6 months (12 months of service as a second or third assistant engineer equals 6 months of creditable service).

(b) A person holding this endorsement may qualify for an STCW endorsement, according to §§ 11.325 and 11.331 of this part.

§ 11.512 Service requirements for domestic endorsement as first assistant engineer of steam, motor, and/or gas turbine-propelled vessels.

(a) The minimum service required to qualify an applicant for endorsement as first assistant engineer of steam, motor, and/or gas turbine-propelled vessels is 1 year of service as an assistant engineer, while holding a license or MMC endorsement as second assistant engineer.

(b) A person holding this endorsement may qualify for an STCW endorsement, according to §§ 11.327, 11.331, and 11.333 of this part.

§ 11.514 Service requirements for domestic endorsement as second assistant engineer of steam, motor, and/or gas turbine-propelled vessels.

(a) The minimum service required to qualify an applicant for endorsement as second assistant engineer of steam, motor, and/or gas turbine-propelled vessels is:

(1) One year of service as an assistant engineer, while holding a license or MMC endorsement as third assistant engineer; or

(2) One year of service while holding a license or MMC endorsement as third assistant engineer, which includes:

(i) A minimum of 6 months of service as third assistant engineer; and

(ii) Additional service as a qualified member of the engine department, calculated on a two-for-one basis; or

(3) One year of service as chief engineer (limited-oceans) of self-propelled vessels, and completing the appropriate examination described in subpart I of this part.

(b) A person holding this endorsement may qualify for an STCW endorsement, according to §§ 11.327, 11.329, and 11.333 of this part.

§ 11.516 Service requirements for domestic endorsement as third assistant engineer of steam, motor, and/or gas turbine-propelled vessels.

(a) The minimum service required to qualify an applicant for endorsement as third assistant engineer of steam, motor, and/or gas turbine-propelled vessels is:

(1) Three years of service in the engineroom of vessels, 2 years of which must have been as a qualified member of the engine department;

(2) Three years of service as an apprentice to the machinist trade engaged in the construction or repair of marine, locomotive, or stationary engines, together with 1 year of service in the engineroom as oiler, watertender, or junior engineer;

(3) Graduation from:

(i) The U.S. Merchant Marine Academy (engineering curriculum);

(ii) The U.S. Coast Guard Academy and completion of an onboard engineer officer qualification program required by the service;

(iii) The U.S. Naval Academy and completion of an onboard engineer officer qualification program required by the service; or

(iv) The engineering class of a Maritime Academy approved by and conducted under the rules prescribed by the Maritime Administrator and listed in part 310 of this title;

(4) Graduation from the marine engineering course of a school of technology accredited by the Accreditation Board for Engineering and Technology, together with 3 months of service in the engine department of steam, motor, or gas turbine-propelled vessels;

(5) Graduation from the mechanical or electrical engineering course of a school of technology accredited by the Accreditation Board for Engineering and Technology, together with 6 months of service in the engine department of steam, motor or gas turbine-propelled vessels;

(6) Satisfactory completion of a 3-year apprentice engineers training program approved by the Coast Guard; or

(7) One year of service as chief engineer (limited-near-coastal) of self-propelled vessels and completion of the appropriate examination described in subpart I of this part.

(b) Experience gained in the deck department on vessels of 100 GRT or more can be credited for up to 3 months of the service requirements under paragraph (a)(1) of this section.

(c) A person holding this endorsement may qualify for an STCW endorsement, according to §§ 11.327, 11.329, and 11.333 of this part.

§ 11.518 Service requirements for domestic endorsement as chief engineer (limited oceans) of steam, motor, and/or gas turbine-propelled vessels.

(a) The minimum service required to qualify an applicant for endorsement as chief engineer (limited oceans) of steam, motor, and/or gas turbine-propelled vessels is 5 years of total service in the engineroom of vessels. Two years of this service must have been as an engineer officer while holding an engineer officer endorsement. Thirty months of the service must have been as a qualified member of the engine department (QMED) or equivalent position.

(b) A person holding this endorsement may qualify for an STCW endorsement, according to §§ 11.325 and 11.331 of this part.

§ 11.520 Service requirements for domestic endorsement as chief engineer (limited near-coastal) of steam, motor, and/or gas turbine-propelled vessels.

(a) The minimum service required to qualify an applicant for endorsement as chief engineer (limited near-coastal) of steam, motor, and/or gas turbine-propelled vessels is 4 years of total service in the engineroom of vessels. One year of this service must have been as an engineer officer while holding an engineer officer endorsement. Two years of the service must have been as a QMED or equivalent position.

(b) A person holding this endorsement may qualify for an STCW endorsement, according to §§ 11.325 and 11.331 of this part.

§ 11.522 Service requirements for domestic endorsement as assistant engineer (limited oceans) of steam, motor, and/or gas turbine-propelled vessels.

(a) The minimum service required to qualify an applicant for endorsement as assistant engineer (limited oceans) of steam, motor, and/or gas turbine-propelled vessels is 3 years of service in the engineroom of vessels. Eighteen months of this service must have been as a QMED or equivalent position.

(b) A person holding this endorsement may qualify for an STCW endorsement, according to §§ 11.327, 11.329, and 11.333 of this part.

§ 11.524 Service requirements for domestic endorsement as designated duty engineer (DDE) of steam, motor, and/or gas turbine-propelled vessels.

(a) DDE endorsements are issued in three levels of propulsion power limitations dependent upon the total service of the applicant and completion of an appropriate examination. These endorsements are limited to vessels of less than 500 GRT on certain waters as specified in § 11.501 of this subpart.

(b) The service requirements for endorsements as DDE are:

(1) For designated duty engineer of steam, motor, and/or gas turbine-propelled vessels of unlimited propulsion power, the applicant must have 3 years of service in the engineroom. Eighteen months of this service must have been as a qualified member of the engine department or equivalent position.

(2) For designated duty engineer of steam, motor, and/or gas turbine-propelled vessels of less than 4,000 HP/3,000 kW, the applicant must have 2 years of service in the engineroom. One year of this service must have been as a qualified member of the engine department or equivalent position.

(3) For designated duty engineer of steam, motor, and/or gas turbine-propelled vessels of less than 1,000 HP/750 kW, the applicant must have 1 year of service in the engineroom. Six months of this service must have been as a qualified member of the engine department or equivalent position.

(c) A person holding this endorsement may qualify for an STCW endorsement, according to §§ 11.325, 11.327, 11.329, and 11.331 of this part.

§ 11.530 Endorsements for domestic engineers of uninspected fishing industry vessels.

(a) This section applies to endorsements for chief and assistant engineers of all vessels, however propelled, which are documented to engage in the fishing industry, with the exception of:

(1) Wooden ships of primitive build;

(2) Unrigged vessels; and

(3) Vessels of less than 200 GRT/500 GT.

(b) Endorsements as chief engineer and assistant engineer of uninspected fishing industry vessels are issued for

ocean waters and with propulsion power limitations in accordance with the provisions of § 11.503 of this subpart.

(c) For an endorsement as chief engineer, the applicant must have served 4 years in the engineroom of vessels. One year of this service must have been as an assistant engineer officer or equivalent position.

(d) For an endorsement as assistant engineer, an applicant must have served 3 years in the engine room of vessels.

(e) Two-thirds of the service required under this section must have been on motor vessels.

(f) Applicants may request an orally assisted examination on the subjects listed in subpart I of this part.

§ 11.540 Endorsements for domestic engineers of mobile offshore drilling units (MODUs).

Endorsements as domestic chief engineer (MODU) or assistant engineer (MODU) authorize service on certain self-propelled or non-self-propelled units of unlimited propulsion power where authorized by the vessel's certificate of inspection.

§ 11.542 Endorsement as domestic chief engineer (MODU).

(a) To qualify for an endorsement as domestic chief engineer (MODU) an applicant must:

(1) Present evidence of the following experience:

(i) Six years of employment assigned to MODUs, including 3 years of employment as mechanic, motorman, subsea engineer, electrician, barge engineer, toolpusher, unit superintendent, crane operator, or equivalent. Eighteen months of that employment must have been assigned to self-propelled or propulsion-assisted units; or

(ii) Two years of employment assigned to MODUs as an assistant engineer (MODU). Twelve months of that employment must have been assigned to self-propelled or propulsion-assisted units; and

(2) Present evidence of completion of a firefighting training course as required by § 11.201(h) of this part.

(b) If an applicant successfully completes an examination and possesses the total required sea service for an endorsement as chief engineer (MODU), but does not possess the required sea service onboard self-propelled or propulsion-assisted units, the Coast Guard may issue the applicant an endorsement limited to non-self-propelled units. The Coast Guard may remove the limitation upon presentation of satisfactory evidence of the required self-propelled sea service and completion of any additional required examination.

(c) A person holding this endorsement may qualify for an STCW endorsement, according to §§ 11.325, 11.327, and 11.331 of this part.

§ 11.544 Endorsement as domestic assistant engineer (MODU).

(a) To qualify for an endorsement as domestic assistant engineer (MODU) an applicant must:

(1) Present evidence of the following experience:

(i) Three years of employment assigned to MODUs, including 18 months of employment as mechanic, motorman, subsea engineer, electrician, barge engineer, toolpusher, unit superintendent, crane operator, or equivalent. Nine months of that employment must have been assigned to self-propelled or propulsion-assisted units;

(ii) Three years of employment in the machinist trade engaged in the construction or repair of diesel engines and 1 year of employment assigned to MODUs in the capacity of mechanic, motorman, oiler, or equivalent. Nine months of that employment must have been assigned to self-propelled or propulsion-assisted units; or

(iii) A degree from a program in marine, mechanical, or electrical engineering technology that is accredited by the Accreditation Board for Engineering and Technology (ABET). The National Maritime Center will give consideration to accepting education credentials from programs having other than ABET accreditation. An applicant qualifying through a degree program must also have at least 6 months of employment in any of the capacities listed in paragraph (a)(1)(i) of this section aboard self-propelled or propulsion-assisted units; and

(2) Present evidence of completion of a firefighting training course as required by § 11.201(h) of this part.

(b) If an applicant successfully completes an examination and possesses the total required sea service for an endorsement as an assistant engineer (MODU), but does not possess the required sea service onboard self-propelled or propulsion assisted units, the Coast Guard may issue the applicant an endorsement limited to non-self-propelled units. The Coast Guard may remove the limitation upon presentation of the satisfactory evidence of the required self-propelled sea service and completion of any additional required examination.

(c) A person holding this endorsement may qualify for an STCW endorsement, according to §§ 11.329 and 11.333 of this part.

§ 11.551 Endorsements for service on offshore supply vessels.

Each endorsement for service on OSVs as chief engineer (OSV) or engineer (OSV) authorizes service on OSVs as defined in 46 U.S.C. 2101(19) and as interpreted under 46 U.S.C. 14104(b), subject to any restrictions placed on the MMC.

§ 11.553 Chief engineer (OSV).

(a) An endorsement for service on an offshore supply vessel (OSV) may be issued as chief engineer. To qualify for a domestic endorsement for service as chief engineer (OSV), an applicant must:

(1) Meet the requirements for an STCW endorsement, according to § 11.325 of this part; and

(2) Complete the appropriate examination described in subpart I of this part.

(b) A person holding an endorsement as chief engineer (OSV) qualifies for an STCW endorsement, according to §§ 11.325, 11.327, and 11.331 of this part.

§ 11.555 Assistant engineer (OSV).

(a) An endorsement for service on an offshore supply vessel (OSV) may be issued as assistant engineer. To qualify for a domestic endorsement for service as assistant engineer (OSV), an applicant must:

(1) Meet the requirements for an STCW endorsement, according to § 11.329 of this part; and

(2) Complete the appropriate examination described in subpart I of this part.

(b) A person holding an endorsement as assistant engineer (OSV) qualifies for an STCW endorsement, according to §§ 11.329 and 11.333 of this part.

Subpart F—Credentialing of Radio Officers

§ 11.601 Applicability.

This subpart provides for endorsement as radio officers for employment on vessels, and for the issue of STCW endorsements for those qualified to serve as radio operators on vessels subject to the provisions on the Global Maritime Distress and Safety System (GMDSS) of Chapter IV of SOLAS (incorporated by reference, see § 11.102 of this part).

§ 11.603 Requirements for radio officers' endorsements.

(a) Each applicant for an original endorsement or renewal of license must present a current first- or second-class radiotelegraph operator license issued

by the Federal Communications Commission. The applicant must enter on the endorsement application form the number, class, and date of issuance of his or her Federal Communications Commission license.

§ 11.604 Requirements for an STCW endorsement for Global Maritime Distress and Safety System (GMDSS) radio operators.

Each applicant for an original endorsement must present a certificate of completion from a Coast Guard-approved course for operator of radio in the GMDSS, meeting the requirements of Section A–IV/2 of the STCW Code (incorporated by reference, see § 11.102 of this part).

Subpart G—Professional Requirements for Pilots

§ 11.701 Scope of pilot endorsements.

(a) An applicant for an endorsement as first-class pilot need not hold any other officer endorsement issued under this part.

(b) The issuance of an endorsement as first-class pilot to an individual qualifies that individual to serve as pilot over the routes specified on the endorsement, subject to any limitations imposed under paragraph (c) of this section.

(c) The OCMI issuing an endorsement as first-class pilot imposes appropriate limitations commensurate with the experience of the applicant, with respect to class or type of vessel, tonnage, route, and waters.

(d) A license or MMC endorsement issued for service as a master, mate, or operator of uninspected towing vessels authorizes service as a pilot under the provisions of § 15.812 of this subchapter. Therefore, first-class pilot endorsements will not be issued with tonnage limitations of 1,600 GRT/3,000 GT or less.

§ 11.703 Service requirements.

(a) The minimum service required to qualify an applicant for an endorsement as first-class pilot is predicated upon the nature of the waters for which pilotage is desired.

(1) *General routes (routes not restricted to rivers, canals, and small lakes).* The applicant must have at least 36 months of service in the deck department of self-propelled vessels navigating on oceans, coastwise, and Great Lakes, or bays, sounds, and lakes other than the Great Lakes, as follows:

(i) Eighteen months of the 36 months of service must be as quartermaster, wheelsman, able seaman, apprentice pilot, or in an equivalent capacity, standing regular watches at the wheel or in the pilothouse as part of routine duties.

(ii) At least 12 months of the 18 months of service required in paragraph (a)(1)(i) of this section must be on vessels operating on the class of waters for which pilotage is desired.

(2) *River routes.* The applicant must have at least 36 months of service in the deck department of any vessel, including at least 12 months of service on vessels operating on the waters of rivers while the applicant is serving in the capacity of quartermaster, wheelsman, apprentice pilot, or deckhand who stands watches at the wheel as part of routine duties.

(3) *Canal and small lakes routes.* The applicant must have at least 24 months of service in the deck department of any vessel, including at least 8 months of service on vessels operating on canals or small lakes.

(b) A graduate of the Great Lakes Maritime Academy in the deck class meets the service requirements of this section for a license as first-class pilot on the Great Lakes.

(c) Completion of an approved or accepted pilot training course may be substituted for a portion of the service requirements of this section in accordance with § 10.404 of this subchapter. Additionally, roundtrips made during this training may apply toward the route familiarization requirements of § 11.705 of this subpart. An individual using substituted service must have at least 9 months of shipboard service.

(d) An individual holding a license or MMC endorsement as master or mate of inspected self-propelled vessels of more than 1,600 GRT/3,000 GT meets the service requirements of this section for an endorsement as first-class pilot.

§ 11.705 Route familiarization requirements.

(a) The Officer in Charge, Marine Inspection (OCMI) has jurisdiction and determines within the range limitations specified in this section, the number of roundtrips required to qualify an applicant for a particular route, considering the following:

(1) The geographic configuration of the waterway;

(2) The type and size of vessels using the waterway;

(3) The abundance or absence of aids to navigation;

(4) The background lighting effects;

(5) The known hazards involved, including waterway obstructions or constrictions such as bridges, narrow channels, or sharp turns; and

(6) Any other factors unique to the route that the OCMI deems appropriate.

(b) An applicant holding no other deck officer endorsement seeking an endorsement as first-class pilot must furnish evidence of having completed a minimum number of roundtrips, while serving as quartermaster, wheelsman, able seaman, apprentice pilot, or in an equivalent capacity, standing regular watches at the wheel or in the pilot house as part of routine duties, over the route sought. Evidence of having completed a minimum number of roundtrips while serving as an observer, properly certified by the master and/or pilot of the vessel, is also acceptable. The range of roundtrips for an endorsement is a minimum of 12 roundtrips and a maximum of 20 roundtrips. An applicant may have additional routes added to the first-class pilot endorsement by meeting the requirements in paragraph (c) of this section.

(c) An applicant who currently holds a deck officer license or MMC endorsement seeking an endorsement as first-class pilot for a particular route must furnish evidence of having completed the number of roundtrips over the route, specified by the OCMI, within the range limitations of this paragraph, for the particular grade of existing license or MMC endorsement held. The range of roundtrips for an endorsement is a minimum of eight roundtrips and a maximum of 15 roundtrips.

(d) Unless determined impracticable by the OCMI, 25 percent of the roundtrips required by the OCMI under this section must be made during the hours of darkness.

(e) One of the roundtrips required by the OCMI under this section must be made over the route within the 6 months immediately preceding the date of application.

(f) For an endorsement of unlimited tonnage, applicants must meet tonnage requirements for roundtrips specified in § 11.711(c) of this subpart.

§ 11.707 Examination requirements.

(a) An applicant for an endorsement as first-class pilot, except as noted in paragraph (b) of this section, is required to pass the examination described in subpart I of this part.

(b) An applicant for an extension of route, or an applicant holding a license or MMC endorsement as master or mate authorized to serve on vessels of more than 1,600 GRT/3,000 GT seeking an endorsement as first-class pilot, is required to pass those portions of the examination described in subpart I of this part that concern the specific route for which endorsement is sought.

§ 11.709 Annual physical examination requirements.

(a) This section applies only to an individual who pilots a vessel of 1,600 GRT/3,000 GT and more.

(b) Every person holding a license or MMC endorsement as first-class pilot must have a thorough physical examination each year.

(c) Each annual physical examination must meet the requirements specified in 46 CFR, part 10, subpart C and be recorded on a CG–719–K.

(d) An individual's first-class pilot endorsement becomes invalid on the first day of the month following the first anniversary of the individual's most recent physical examination satisfactorily completed; the individual may not operate under the authority of that endorsement until a physical examination has been satisfactorily completed.

§ 11.711 Tonnage requirements.

(a) In order to obtain a first-class pilot endorsement authorizing service on vessels of unlimited tonnage over a particular route, the applicant must have sufficient experience on vessels of more than 1,600 GRT/3,000 GT.

(b) For purposes of this section, an applicant is considered to have sufficient experience if the applicant has 18 months of experience as master, mate, quartermaster, wheelsman, able seaman, apprentice pilot, or in an equivalent capacity, standing regular watches at the wheel or in the pilothouse as part of routine duties, on vessels of 1,600 GRT/3,000 GT or more, and two-thirds of the minimum number of roundtrips required for the route have been on vessels of 1,600 GRT/3,000 GT or more.

(c) If an applicant does not have sufficient experience on vessels of 1,600 GRT/3,000 GT or more, the endorsement will be for a limited tonnage until the applicant completes the 18 months of sea service, as mentioned in paragraph (b) of this section, on vessels of 1,600 GRT/3,000 GT or more.

(d) For purposes of this section, for experience with respect to tonnage on towing vessels, the combined gross tonnage of the towing vessels and the vessels towed will be considered. However, the Coast Guard may require that all or a portion of the required number of roundtrips be obtained on self-propelled vessels of 1,600 GRT/3,000 GT or more, when the Coast Guard determines that due to the nature of the waters and the overall experience of the applicant, self-propelled vessel experience is necessary to obtain a first-class pilot endorsement that is not restricted to tug and barge combinations.

§ 11.713 Requirements for maintaining current knowledge of waters to be navigated.

(a) If a first-class pilot has not served over a particular route within the past 60 months, that person's license or MMC endorsement is invalid for that route, and remains invalid until the individual has made one re-familiarization round trip over that route, except as provided in paragraph (b) of this section. Whether this requirement is satisfied or not has no effect on the renewal of a license or MMC endorsement. Roundtrips made within the 90-day period preceding renewal will be valid for the duration of the renewed license or MMC endorsement.

(b) For certain long or extended routes, the OCMI may, at his or her discretion, allow the re-familiarization requirement to be satisfied by reviewing appropriate navigation charts, coast pilots tide and current tables, local Notices to Mariners, and any other materials that would provide the pilot with current knowledge of the route. Persons using this method of re-familiarization must certify, when applying for renewal of their license or MMC endorsement, the material they have reviewed and the dates on which this was accomplished. Review within the 90-day period preceding renewal is valid for the duration of the renewed MMC endorsement.

Subpart H—Registration of Staff Officers and Miscellaneous Endorsements

§ 11.801 Applicability.

This subpart provides for the registration of staff officers for employment on vessels documented or numbered under the laws of the United States. Staff officers must be registered if serving on most vessels in ocean service or on the Great Lakes.

§ 11.805 General requirements.

(a) The applicant for an endorsement as staff officer is not required to take any examination; however, the applicant must present to the Coast Guard a letter justifying the need for the endorsement.

(b) An applicant for a higher grade in the staff department must apply in the same manner as for an original endorsement and must surrender the previous Coast Guard-issued credentials upon issuance of the new MMC. A staff officer may serve in a lower grade of service for which he or she is registered.

(c) Title 46 U.S.C. 8302 addresses uniforms for staff officers who are members of the Naval Reserve.

(d) A duplicate MMC may be issued by the Coast Guard. (See § 10.229 of this subchapter.)

(e) An MMC is valid for a term of 5 years from the date of issuance. Procedures for renewing endorsements are found in § 10.227 of this subchapter.

(f) Each applicant for an original or a higher grade of endorsement, as described in paragraph (b) of this section, must produce evidence of having passed a chemical test for dangerous drugs or of qualifying for an exception from testing in § 16.220 of this subchapter. An applicant who fails a chemical test for dangerous drugs will not be issued an MMC.

§ 11.807 Experience requirements for registry.

(a) The applicant for a certificate of registry as staff officer must submit evidence of experience as follows:

(1) *Chief purser.* Two years of service aboard vessels performing duties relating to work in the purser's office.

(2) *Purser.* One year of service aboard vessels performing duties relating to work in the purser's office.

(3) *Senior assistant purser.* Six months of service aboard vessels performing duties relating to work in the purser's office.

(4) *Junior assistant purser.* Previous experience not required.

(5) *Medical doctor.* A valid license as physician or surgeon issued under the authority of a state or territory of the United States, the Commonwealth of Puerto Rico, or the District of Columbia.

(6) *Professional nurse.* A valid license as a registered nurse issued under authority of a state or territory of the United States, the Commonwealth of Puerto Rico, or the District of Columbia.

(7) *Marine physician assistant.* Successful completion of an accredited course of instruction for a physician's assistant or nurse practitioner program.

(8) *Hospital corpsman.* A rating of at least hospital corpsman or health services technician, first class in the U.S. Navy, U.S. Coast Guard, U.S. Marine Corps, or an equivalent rating in the U.S. Army (not less than staff sergeant, Medical Department, U.S.A.), or in the U.S. Air Force (not less than technical sergeant, Medical Department, U.S.A.F.), and a period of satisfactory service of at least 1 month in a military hospital or U.S. Public Health Service Hospital.

(b) Employment on shore in connection with a vessel's business may be accepted instead of service aboard vessels. Related shore employment is

accepted in the ratio of 2 months of shore service to count as 1 month of service aboard vessels.

(c) In computing the length of service required of an applicant for an endorsement, service of one season on vessels on the Great Lakes is counted as service of 1 year.

(d) In the event an applicant for an endorsement, other than medical doctor or professional nurse, presents evidence of other qualifications that, in the opinion of the Coast Guard, is equivalent to the experience requirements of this section and is consistent with the duties of a staff officer, the Coast Guard may issue the MMC.

§ 11.811 Requirements to qualify for an STCW endorsement as vessel security officer.

(a) The applicant for an endorsement as vessel security officer must present satisfactory documentary evidence in accordance with the requirements in 33 CFR 104.215.

(b) All applicants for an endorsement must meet the physical examination requirements in 46 CFR, part 10, subpart C.

(c) All applicants for an endorsement must meet the safety and suitability requirements and the National Driver Registry review requirements in § 10.209(e) of this subchapter, unless they have met these requirements within the previous 5 years in connection with another endorsement.

§ 11.821 High-speed craft type rating.

(a) To qualify for a high speed craft type rating certificate (TRC), an applicant must:

(1) Hold a valid officer endorsement for vessels of commensurate grade, tonnage, route, and/or horsepower; and

(2) Present evidence of successful completion of a Coast Guard-approved type rating training program.

(b) A separate TRC will be issued for each type and class of high speed craft. The original route will be as specified in the approved type rating program. Additional routes may be added to an existing TRC by completing at least 12 roundtrips over each route under the supervision of a type-rated master on the class of high speed craft the TRC will be valid for. Six of the trips must be made during the hours of darkness or a ''daylight only'' restriction will be imposed.

(c) A TRC will be valid for 2 years. The expiration date of a TRC will not be changed due to the addition of additional routes.

(d) To renew a TRC, an applicant must provide evidence of:

(1) At least 6 months of service in the appropriate position on the type crafts to which the TRC applies during the preceding 2 years, including at least 12 roundtrips over each route, together with evidence of a completed revalidation assessment; or

(2) Completion of an approved revalidation training program.

Subpart I—Subjects of Examinations

§ 11.901 General provisions.

(a) Where required by § 11.903 of this subpart, each applicant for an endorsement listed in that section must pass an examination on the appropriate subjects listed in this subpart.

(b) If the endorsement is to be limited in a manner that would render any of the subject matter unnecessary or inappropriate, the examination may be amended accordingly by the Coast Guard. Limitations that may affect the examination content are as follows:

(1) Restricted routes for reduced service officer endorsements (master or mate of vessels of less than 200 GRT/500 GT, OUPV, or master or mate (pilot) of towing vessels).

(2) Limitations to a certain class or classes of vessels.

(c) Simulators used in assessments of competence required by subpart C of this part must meet the appropriate performance standards set out in Section A–I/12 of the STCW Code (incorporated by reference, see § 11.102 of this part). However, simulators installed or brought into use before February 1, 2002, need not meet these performance standards if they fulfill the objective of the assessment of competence or demonstration of proficiency.

§ 11.903 Officer endorsements requiring examinations.

(a) The following officer endorsements require examinations for issuance:

(1) Chief mate of ocean or near-coastal, self-propelled vessels of unlimited tonnage (examined at the management level);[1]

(2) Third mate of ocean or near-coastal, self-propelled vessels of unlimited tonnage (examined at the operational level);[1]

(3) Chief mate of ocean or near-coastal, self-propelled vessels of less than 1,600 GRT/3,000 GT;[1]

(4) Mate of ocean or near-coastal, self-propelled vessels of less than 1,600 GRT/3,000 GT;[1]

(5) Master of near-coastal vessels less than 200 GRT/500 GT;

(6) Mate of near-coastal vessels less than 100 GRT;

(7) Master of Great Lakes and inland vessels of unlimited tonnage;

(8) Mate of Great Lakes and inland vessels of unlimited tonnage;

(9) Master of inland vessels of unlimited tonnage;

(10) Master of river vessels of unlimited tonnage;

(11) Master of Great Lakes and inland/river vessels less than 500 GRT or less than 1,600 GRT/3,000 GT;

(12) Mate of Great Lakes and inland/river vessels less than 500 GRT or less than 1,600 GRT/3,000 GT;

(13) Mate of Great Lakes and inland/river vessels less than 200 GRT/500 GT;

(14) Master of Great Lakes and inland/river vessels less than 100 GRT;

(15) First-class pilot;

(16) Apprentice mate (steersman) of towing vessels;

(17) Apprentice mate (steersman) of towing vessels, limited;

(18) Operator of uninspected passenger vessels;

(19) Master of uninspected fishing industry vessels;

(20) Mate of uninspected fishing industry vessels;

(21) Master (OSV);

(22) Chief mate (OSV);

(23) Mate (OSV);

(24) Chief engineer for service on Great Lakes and inland vessels (limited or unlimited propulsion power);

(25) First assistant engineer (limited or unlimited propulsion power);

(26) Second assistant engineer for service on Great Lakes and inland vessels (limited or unlimited propulsion power);

(27) Third assistant engineer (limited or unlimited propulsion power);

(28) Chief engineer (limited) steam/motor vessels;

(29) Assistant engineer (limited) steam/motor vessels;

(30) Designated duty engineer steam/motor vessels;

(31) Chief engineer (uninspected fishing industry vessels);

(32) Assistant engineer (uninspected fishing industry vessels);

(33) Chief engineer (OSV); and

(34) Assistant engineer (OSV).

[1] Examinations will vary depending on route desired.

(b) The following officer endorsements do not require examinations:

(1) Master of seagoing vessels of unlimited tonnage when upgrading from MMC officer endorsements, or a license and STCW endorsement as chief mate of seagoing vessels of unlimited tonnage, provided the applicant has already been examined at the management level;

(2) Master of seagoing vessels of unlimited tonnage when adding an

endorsement as offshore installation manager (OIM);

(3) Master of ocean or near-coastal, self-propelled vessels of less than 1,600 GRT/3,000 GT, when upgrading from an MMC officer/STCW endorsement or a license and STCW endorsement as chief mate of seagoing vessels of less than 1,600 GRT/3,000 GT, provided that the applicant has already been examined at the management level;

(4) Master of ocean or near-coastal self-propelled vessels of less than 200 GRT/500 GT, when upgrading from mate of near-coastal self-propelled vessels of less than 200 GRT/500 GT. Master of ocean self-propelled vessels of less than 200 GRT/500 GT would, however, require an examination in celestial navigation;

(5) Second mate of seagoing vessels when upgrading from third mate of seagoing vessels, provided the applicant has already been examined at the operational level;

(6) Master of Great Lakes and inland vessels, or river vessels of less than 200 GRT/500 GT when upgrading from mate of less than 200 GRT/500 GT on the same route;

(7) Chief engineer unlimited, provided the applicant has already been examined at the management level;

(8) Chief engineer limited to service on steam, motor, or gas turbine-propelled vessels of less than 10,000 HP/7,500 kW on near-coastal routes, provided the applicant has already been examined at the management level;

(9) Chief engineer limited to service on steam, motor, or gas turbine-propelled vessels of less than 4,000 HP/3,000 kW on near-coastal routes, provided the applicant has already been examined at the management level; and

(10) Second assistant engineer when upgrading from third assistant engineer, provided the applicant has already been examined at the operational level.

§ 11.910 Subjects for deck officer endorsements.

Table 11.910–1 gives the codes used in Table 11.910–2 for all deck officers. Table 11.910–2 indicates the examination subjects for each endorsement, by code number. Figures in the body of Table 11.910–2, in place of the letter ''x'', refer to notes.

Table 11.910–1: Codes for Deck Officer Endorsements

Deck Officer Endorsements:

1. Master/chief mate, oceans/near-coastal, unlimited tonnage.
2. Master/chief mate, oceans/near-coastal, less than 1,600 GRT/3,000 GT.
3. Second mate/third mate/mate, oceans/near-coastal, unlimited tonnage.
4. Master, oceans/near-coastal, and mate, near-coastal, less than 200 GRT/500 GT (includes master, near-coastal, less than 100 GRT).
5. Operator, uninspected passenger vessels, near-coastal.
6. Operator, uninspected passenger vessels, Great Lakes/inland.
7. Apprentice mate, towing vessels, ocean (domestic trade) and near-coastal routes.
8. Apprentice mate (steersman), towing vessels, Great Lakes, and inland routes.
9. Steersman, towing vessels, Western Rivers.
10. Master, Great Lakes/inland, or master, inland, unlimited tonnage.
11. Mate, Great Lakes/inland, unlimited tonnage.
12. Master, Great Lakes/inland, less than 500 GRT and less than 1,600 GRT/3,000 GT.
13. Mate, Great Lakes/inland, less than 500 GRT and less than 1,600 GRT/3,000 GT.
14. Master or mate, Great Lakes/inland, less than 200 GRT/500 GT (includes master, Great Lakes/inland, less than 100 GRT).
15. Master, rivers, unlimited tonnage.
16. Master, rivers, less than 500 GRT and less than 1,600 GRT/3,000 GT.
17. Mate, rivers, less than 500 GRT and less than 1,600 GRT/3,000 GT.
18. Master or mate, rivers, less than 200 GRT/500 GT (includes master, rivers, less than 100 GRT).
19. Master, uninspected fishing industry vessels, oceans/near-coastal.
20. Mate, uninspected fishing industry vessels, oceans/near-coastal.
21. First-class pilot.
22. Master (OSV).
23. Chief mate (OSV).
24. Mate (OSV).

TABLE 11.910–2—DECK OFFICER ENDORSEMENTS

Examination topics	1	2	3	4	5	6	7	8	9	10	11	12	13	14	15	16	17	18	19	20	21	22	23	24
Navigation and position determination:																								
Ocean Track Plotting:																								
Middle Latitude Sailing	1	1	1	....	....	....	....	....	....	....	....	....	....	....	....	....	....	....	1	1	....	1	1	1
Mercator Sailing	X	X	X	7	....	....	....	....	....	....	....	....	....	....	....	....	....	....	X	X	....	X	X	X
Great Circle Sailing	1	1	1	7	....	....	....	....	....	....	....	....	....	....	....	....	....	....	1	1	....	1	1	1
Parallel Sailing	1	1	1	....	....	....	....	....	....	....	....	....	....	....	....	....	....	....	1	1	....	1	1	1
ETA	X	X	X	....	....	....	1	....	....	....	....	....	....	....	....	....	....	....	X	1	1	X	X	1
Piloting:																								
Distance Off	X	X	X	X	X	X	X	X	....	X	X	X	X	X	....	....	....	....	X	X	X	X	X	X
Bearing Problems	X	X	X	X	X	X	X	X	....	X	X	X	X	X	....	....	....	....	X	X	X	X	X	X
Fix or Running Fix	X	X	X	X	X	X	X	X	....	X	X	X	X	X	....	....	....	....	X	X	X	X	X	X
Chart Navigation	X	X	X	X	X	X	X	X	2	X	X	X	X	X	2	2	2	2	X	X	X	X	X	X
Dead Reckoning	X	X	X	X	X	X	X	X	....	X	X	X	X	X	....	....	....	....	X	X	X	X	X	X
Celestial Observations:																								
Latitude by Polaris	1	1	1	1	....	....	....	....	....	....	....	....	....	....	....	....	....	....	1	1	....	1	1	1
Latitude by Meridian Transit (Any Body)	1	1	....	....	....	....	....	....	....	....	....	....	....	....	....	....	....	....	1	....	....	1	1	....
Latitude by Meridian Transit (Sun Only)	....	....	1	1	....	....	1	....	....	....	....	....	....	....	....	....	....	....	....	1	....	....	....	1
Fix or Running Fix (Any Body)	1	1	1	....	....	....	....	....	....	....	....	....	....	....	....	....	....	....	1	....	....	1	1	1
Fix or Running Fix (Sun Only)	....	....	....	1	....	....	1	....	....	....	....	....	....	....	....	....	....	....	....	1	....	....	....	....
Star Identification	1	1	1	....	....	....	1	....	....	....	....	....	....	....	....	....	....	....	1	....	....	1	1	1
Star Selection	1	1	1	....	....	....	1	....	....	....	....	....	....	....	....	....	....	....	1	....	....	1	1	1
Times of Celestial Phenomena:																								
Time of Meridian Transit (Any Body)	1	1	....	....	....	....	....	....	....	....	....	....	....	....	....	....	....	....	1	....	....	1	1	....
Time of Meridian Transit (Sun Only)	....	....	1	1	....	....	1	....	....	....	....	....	....	....	....	....	....	....	....	1	....	....	....	1
Zone Time of Sun Rise/Set/Twilight	1	1	1	1	....	....	1	....	....	....	....	....	....	....	....	....	....	....	1	1	....	1	1	1
Speed by RPM	X	X	X	....	....	....	....	....	....	3	....	....	....	....	....	....	....	....	X	X	....	X	X	X
Fuel Conservation	X	X	....	1	....	....	1	....	....	3	....	....	....	....	....	....	....	....	X	....	....	X	X	....
Electronic Navigation	X	X	X	X	X	X	X	X	....	X	X	X	X	X	....	....	....	....	X	X	X	X	X	X
Instruments & Accessories	X	X	X	X	X	X	X	X	X	X	X	X	X	X	X	X	X	X	X	X	X	X	X	X
Aids to Navigation	X	X	X	X	X	X	X	X	X	X	X	X	X	X	X	X	X	X	X	X	X	X	X	X
Charts, Navigation Publication, & Notices to Mariners	X	X	X	X	X	X	X	X	X	X	X	X	X	X	X	X	X	X	X	X	X	X	X	X
Nautical Astronomy & Navigation Definitions	1	1	1	1	....	....	1	....	....	....	....	....	....	....	....	....	....	....	1	1	....	1	1	1
Chart Sketch	....	....	....	....	....	....	....	....	....	....	....	....	....	....	....	....	....	....	....	....	4	....	....	....

TABLE 11.910–2—DECK OFFICER ENDORSEMENTS—Continued

Examination topics	1	2	3	4	5	6	7	8	9	10	11	12	13	14	15	16	17	18	19	20	21	22	23	24
Seamanship:																								
Marlinspike Seamanship	....	....	X	X	X	X	X	X	X	....	X	....	X	X	X	X	X	X	X	X	X	....	....	X
Purchases, Blocks, & Tackle	....	....	X	X	....	....	X	X	X	....	X	....	X	X	X	X	X	X	X	X	X	....	....	X
Watchkeeping:																								
COLREGS	X	X	X	X	X	5	X	5	....	5	5	5	5	5	....	....	....	....	X	X	5	X	X	X
Inland Navigational Rules	X	X	X	X	X	X	X	X	X	X	X	X	X	X	X	X	X	X	X	X	X	X	X	X
Basic Principles, Watchkeeping	X	X	X	X	X	X	X	X	X	X	X	X	X	X	X	X	X	X	X	X	X	X	X	X
Navigation Safety Regulations (33 CFR 164)	X	....	X	....	....	....	X	X	X	X	X	....	....	....	X	....	....	....	6	6	6	6	6	6
								X																
Compass—Magnetic & Gyro:																								
Principles, Operation, and Maintenance of Gyro Compass	X	X	X	7	....	....	1	....	....	X	X	X	X	7	X	....	....	....	X	X	....	X	X	X
Principles of Magnetic Compass	X	X	X	X	X	3	X	3	X	X	X	X	X	X	X	X	X	X	X	X	X	X	X	X
Gyro Compass Error/Correction	X	X	X	7	....	....	1	X	....	X	X	X	X	7	X	....	....	....	X	X	X	X	X	X
Magnetic Compass Error/Correction	X	X	X	X	X	3	X	3	X	X	X	X	X	X	X	X	X	X	X	X	X	X	X	X
Determination of Compass Error:																								
Azimuth (Any Body)	X	X	X	7	....	....	X	....	....	....	....	....	....	....	....	....	....	....	....	....	....	X	X	X
Azimuth (Sun Only)	....	....	....	....	....	....	....	....	....	3	....	....	....	....	....	....	....	....	1	1	....	....	....	....
Amplitude (Any Body)	X	X	X	7	....	....	X	....	....	....	....	....	....	....	....	....	....	....	....	....	....	X	X	X
Amplitude (Sun Only)	....	....	....	....	....	....	....	....	....	3	....	....	....	....	....	....	....	....	1	1	....	....	....	....
Terrestrial Observation	X	X	X	X	X	X	X	X	....	X	X	X	X	X	....	....	....	....	X	X	X	X	X	X
Meteorology and Oceanography:	....	....	....	....	....	....	....	....	....	....	....	....	....	....	....	....	....	....	....	....	....	....	....	....
Characteristics of Weather Systems	X	X	X	X	X	X	X	X	X	X	X	X	X	X	X	X	X	X	X	X	....	X	X	X
Ocean Current Systems	X	X	X	X	....	....	X	....	....	....	....	....	....	....	....	....	....	....	X	X	....	X	X	....
Weather Charts and Reports	X	X	X	X	X	X	X	X	....	X	X	X	X	X	....	....	....	....	X	X	....	X	X	X
Tides and Tidal Currents:																								
Terms and Definitions	X	X	X	X	X	X	X	X	....	X	X	X	X	X	....	....	....	....	X	X	X	X	X	X
Publications	X	X	X	X	X	X	X	X	....	X	X	X	X	X	....	....	....	....	X	X	X	X	X	X
Calculations	X	X	X	X	X	X	X	X	....	X	X	X	X	X	....	....	....	....	X	X	X	X	X	X
Vessel Maneuvering and Handling:																								
Approaching Pilot Vessel or Station	X	X	....	....	....	....	....	....	....	....	....	....	....	....	....	....	....	....	....	....	X	....	....	....
Vessel Handling in Rivers & Estuaries	X	X	....	X	X	X	X	X	X	X	X	X	X	X	X	X	X	X	X	....	X	X	X	....
Maneuvering in Shallow Water	X	X	....	X	X	X	X	X	X	X	X	X	X	X	X	X	X	X	X	....	X	X	X	....
Interaction with Bank/Passing Ship	X	X	....	X	X	X	X	X	X	X	X	X	X	X	X	X	X	X	X	....	X	X	X	....
Berthing and Unberthing	X	X	....	X	X	X	X	....	....	X	X	X	....	X	X	X	....	X	X	....	X	X	X	....
Anchoring and Mooring	X	X	X	X	X	X	X	....	....	X	X	X	X	X	....	....	....	....	X	X	X	X	X	X
Dragging of, Clearing Fouled Anchors	X	X	X	X	....	....	....	....	....	X	X	X	X	X	....	....	....	....	X	X	....	X	X	X
Heavy Weather Operations	X	X	X	X	X	X	X	X	....	3	3	3	3	3	....	....	....	....	X	X	....	X	X	X
Maneuvering for Launching of Lifeboats and Liferafts in Heavy Weather	X	X	....	X	....	....	X	X	....	3	....	3	....	3	....	....	....	....	X	....	....	X	X	....
Receiving Survivors From Lifeboats/Liferafts	X	X	....	X	....	....	X	X	....	....	....	....	....	....	....	....	....	....	....	....	....	X	X	....
General: Turn Circle, Pivot Point, Advance and Transfer	....	....	X	X	X	X	X	X	X	X	X	X	X	X	X	X	X	X	X	X	X	....	....	X
Determine Maneuvering Characteristics of Major Vessel Types	X	X	....	....	....	....	....	....	....	3	....	....	....	....	....	....	....	....	....	....	....	X	X	....
Wake Reduction	X	X	X	X	X	X	X	X	X	X	X	X	X	X	X	X	X	X	X	X	X	X	X	X
Ice Operations/Ice Navigation	X	X	X	....	....	....	X	X	X	X	3	X	3	....	....	....	....	....	X	X	....	X	X	X
Towing Vessel Operations	....	....	....	....	....	....	X	X	X	....	....	....	....	....	....	....	....	....	....	....	....	....	....	....
Stability, Construction, and Damage Control:																								
Principles of Vessel Construction	X	X	X	X	....	....	X	3	X	X	3	X	3	X	X	X	....	....	....	....	....	X	X	X
Trim and Stability	X	X	X	X	....	....	X	X	X	X	3	X	3	X	X	X	....	X	X	X	....	X	X	X
Damage Trim and Stability	X	X	....	....	....	....	....	....	....	....	....	....	....	....	....	....	....	....	....	....	....	X	X	....
Stability, Trim, and Stress Calculation	X	X	X	....	....	....	....	....	....	....	....	....	....	....	....	....	....	....	....	....	....	X	X	....
Vessel Structural Members	X	X	X	7	....	....	....	....	....	....	X	X	3	7	....	....	....	....	....	....	....	X	X	X
IMO Ship Stability Recommendations	X	X	....	....	....	....	....	....	....	....	....	....	....	....	....	....	....	....	....	....	....	X	X	....
Damage Control	X	X	X	7	....	....	X	X	....	X	X	X	X	7	X	X	X	7	X	X	....	X	X	X
Change in Draft Due to Density	X	....	....	....	....	....	....	....	....	....	....	....	....	....	....	....	....	....	....	....	....	....	....	....
Vessel Power Plants:																								
Marine Power Plant Operating Principles	X	X	....	7	....	....	X	X	X	X	....	X	....	7	X	X	....	....	X	....	....	X	X	....
Vessel's Auxiliary Machinery	X	X	....	....	....	....	....	....	....	X	....	X	....	....	X	X	....	....	....	....	....	X	X	....
Marine Engineering Terms	X	X	X	7	....	....	X	X	X	X	X	X	X	7	X	X	X	7	X	X	....	X	X	X
Small Engine Operations and Maintenance	....	....	....	X	X	X	....	....	....	....	....	....	....	X	....	....	....	X	....	....	....	....	....	....
Cargo Handling and Stowage:																								
Cargo Stowage and Security, including Cargo Gear	X	X	X	7	....	....	....	....	....	X	X	X	X	7	X	X	X	7	X	X	....	X	X	X
Loading and Discharging Operations	X	X	X	....	....	....	....	....	....	X	X	X	X	....	X	X	X	....	X	X	....	X	X	X
International Regulations for Cargoes, especially IMDG	X	X	....	....	....	....	....	....	....	....	....	....	....	....	....	....	....	....	....	....	....	X	X	....
Dangerous/Hazardous Cargo Regulations	X	X	X	....	....	....	X	X	X	X	X	X	X	....	X	X	X	....	....	....	....	X	X	X
Tank Vessel and Fuel Oil Operations	X	X	X	7	....	....	....	....	....	X	X	X	X	7	X	X	X	7	X	X	....	X	X	X
Cargo Piping and Pumping Systems	....	....	....	....	....	....	....	....	....	....	....	....	....	....	....	....	....	....	....	....	....	X	X	X
Cargo Oil Terms and Definitions	....	....	....	....	....	....	....	....	....	....	....	....	....	....	....	....	....	....	....	....	....	X	X	X
Barge Regulations (Operations)	....	....	....	....	....	....	X	X	X	....	....	....	....	....	....	....	....	....	....	....	....	....	....	....
Fire Prevention and Firefighting Appliances:																								
Organization of Fire Drills	X	X	X	X	....	....	X	X	X	X	X	X	X	X	X	X	X	X	X	X	....	X	X	X
Classes and Chemistry of Fire	X	X	X	X	X	X	X	X	X	X	X	X	X	X	X	X	X	X	X	X	....	X	X	X
Firefighting Systems	X	X	X	X	....	....	X	X	X	X	X	X	X	X	X	X	X	X	X	X	X	X	X	X
Firefighting Equipment & Regulations	X	X	X	7	....	....	X	X	X	X	X	X	X	7	X	X	X	7	X	X	X	X	X	X
Firefighting Equipment & Regulations for T-Boats	....	....	....	9	....	....	....	....	....	....	....	....	....	9	....	....	....	9	....	....	....	....	....	....
Basic Firefighting and Prevention	X	X	X	X	X	X	X	X	X	X	X	X	X	X	X	X	X	X	X	X	X	X	X	X
Emergency Procedures:																								
Ship Beaching Precautions	X	X	....	....	....	....	....	....	....	X	....	X	....	....	....	....	....	....	X	....	....	X	X	....
Actions Prior to/after Grounding, Including Refloating	X	X	....	....	....	....	....	....	....	X	....	X	....	....	X	X	....	....	X	....	....	X	X	....
Collision	X	X	....	X	X	X	X	X	X	X	....	X	....	X	X	X	....	X	X	....	....	X	X	....
Temporary Repairs	X	X	X	X	X	X	X	X	X	X	X	X	X	X	X	X	X	X	X	X	....	X	X	X
Passenger/Crew Safety in Emergencies	X	X	X	X	X	X	X	X	X	X	X	X	X	X	X	X	X	X	X	X	....	X	X	X

TABLE 11.910–2—DECK OFFICER ENDORSEMENTS—Continued

Examination topics	1	2	3	4	5	6	7	8	9	10	11	12	13	14	15	16	17	18	19	20	21	22	23	24
Fire or Explosion	X	X	X	X	X	X	X	X	X	X	X	X	X	X	X	X	X	X	X	X	....	X	X	X
Abandon Ship Procedures	X	X	X	X	X	X	X	X	X	X	X	X	X	X	X	X	X	X	X	X	....	X	X	X
Emergency Steering	X	X	X	7	....	....	X	X	X	X	X	X	X	7	X	X	X	7	X	X	....	X	X	X
Rescuing Survivors from Ship/Aircraft in Distress	X	X	X	X	....	....	X	X	X	X	X	X	X	X	X	X	X	X	X	X	....	X	X	X
Man Overboard Procedures	X	X	X	X	X	X	X	X	X	X	X	X	X	X	X	X	X	X	X	X	....	X	X	X
Emergency Towing	X	X	X	X	X	X	X	X	X	X	X	X	X	X	X	X	X	X	X	X	....	X	X	X
Medical Care:																								
Knowledge and use of:																								
International Medical Guide for Ships	X	X	....	....	....	....	....	....	....	....	....	....	....	....	....	....	....	....	....	....	....	X	X	....
Ship's Medical Chest & Medical Aid at Sea	X	X	....	....	....	....	....	....	....	....	....	....	....	....	....	....	....	....	....	....	....	X	X	....
Medical Section, International Code of Signals	X	X	X	....	....	....	....	....	....	....	....	....	....	....	....	....	....	....	....	....	....	X	X	X
Maritime Law:																								
International Maritime Law:																								
International Convention on Load Lines	X	X	....	....	....	....	....	....	....	....	....	....	....	....	....	....	....	....	....	....	....	X	X	....
SOLAS	X	X	....	....	....	....	....	....	....	....	....	....	....	....	....	....	....	....	....	....	....	X	X	....
MARPOL 73/78	X	X	X	X	....	....	....	....	....	....	....	....	....	....	....	....	....	....	X	X	....	X	X	X
International Health Regulations	X	X	....	....	....	....	....	....	....	....	....	....	....	....	....	....	....	....	....	....	....	X	X	....
Other International Instruments for Ship/Passenger/Crew/Cargo Safety	X	X	....	X	....	....	....	....	....	....	....	....	....	....	....	....	....	....	....	....	....	X	X	....
National Maritime Law:																								
Load Lines	X	X	X	X	....	....	X	X	....	3	3	3	3	X	....	....	....	....	....	....	....	X	X	X
Certification & Documentation of Vessels	X	X	....	X	X	X	X	X	X	X	....	X	....	X	X	X	....	X	X	....	....	X	X	....
Rules & Regulations for Inspected Vessels	X	X	X	7	....	....	....	....	....	X	X	X	X	7	X	X	X	7	....	....	....	X	X	X
Rules & Regulations for Inspected T-Boats	....	....	....	9	....	....	....	....	....	....	....	....	....	9	....	....	....	9	....	....	....	....	....	....
Rules and Regulations for Uninspected Vessels	....	....	....	....	X	X	X	X	X	....	....	....	....	....	....	....	....	....	X	X	....	....	....	....
Pollution Prevention Regulations	X	X	X	X	X	X	X	X	X	X	X	X	X	X	X	X	X	X	X	X	....	X	X	X
Pilotage	X	X	....	....	....	....	X	X	X	....	....	....	....	....	....	....	....	....	....	....	X	X	X	....
Licensing & Certification of Seamen	X	X	X	X	X	X	X	X	X	X	X	X	X	X	X	X	X	X	X	X	....	X	X	X
Shipment and Discharge, Manning	X	X	....	X	....	....	X	....	....	X	....	X	....	....	X	X	....	....	....	....	....	X	X	....
Title 46, U.S. Code	X	X	....	....	....	....	....	....	....	X	....	X	....	....	X	X	....	....	....	....	....	X	X	....
Captain of the Port Regulations, Vessel Traffic Service Procedures for the Route Desired	....	....	....	....	....	....	....	....	....	....	....	....	....	....	....	....	....	....	....	....	X	....	....	....
Shipboard Management and Training:																								
Personnel Management	X	X	....	....	....	....	....	....	....	X	....	X	....	....	X	X	....	....	X	....	....	X	X	....
Shipboard Organization	X	X	....	....	....	....	....	....	....	X	....	X	....	....	X	X	....	....	X	....	....	X	X	....
Required Crew Training	X	X	....	....	....	....	....	....	....	X	....	X	....	....	X	X	....	....	X	....	....	X	X	....
Ship Sanitation	X	X	....	X	X	X	X	X	X	X	....	X	....	X	X	X	....	X	X	....	....	X	X	....
Vessel Alteration/Repair Hot Work	X	X	X	X	....	....	X	X	X	X	X	X	X	X	X	X	X	X	X	X	....	X	X	X
Safety	X	X	X	X	X	X	X	X	X	X	X	X	X	X	X	X	X	X	X	X	....	X	X	X
Ship's Business:																								
Charters	X	X	....	....	....	....	X	X	X	X	....	X	....	....	X	X	....	....	....	....	....	X	X	....
Liens and Salvage	X	X	....	....	....	....	X	X	X	X	....	X	....	....	X	X	....	....	....	....	....	X	X	....
Insurance	X	X	....	....	....	....	X	X	X	X	....	X	....	....	X	X	....	....	....	....	....	X	X	....
Entry and Clearance	X	X	....	....	....	....	X	X	X	X	....	X	....	....	X	X	....	....	....	....	....	X	X	....
ISM and Safety Management Systems	X	X	X	....	....	....	X	X	X	....	....	....	....	....	....	....	....	....	....	....	....	X	X	X
Certificates and Documents Required	X	X	X	X	X	X	X	X	X	X	X	X	X	X	X	X	X	X	X	X	....	X	X	X
Communications:																								
Radiotelephone Communications	X	X	X	X	X	X	X	X	X	X	X	X	X	X	X	X	X	X	X	X	X	X	X	X
GMDSS	X	X	....	....	....	....	....	....	....	....	....	....	....	....	....	....	....	....	....	....	....	X	X	....
Signals:.																								
Storm/Wreck/Distress/ Special	X	X	X	X	X	X	X	X	X	X	X	X	X	X	X	X	X	X	X	X	....	X	X	X
International Code of Signals	X	X	X	....	....	....	....	....	....	....	....	....	....	....	....	....	....	....	....	....	....	X	X	X
IMO Standard Maritime Communication Phrases	X	X	X	....	....	....	....	....	....	....	....	....	....	....	....	....	....	....	....	....	....	X	X	X
Lifesaving:																								
Survival at Sea	X	X	X	X	X	....	X	....	....	....	....	....	....	....	....	....	....	....	X	X	....	X	X	X
Lifesaving Appliance Regulations	X	X	X	7	....	....	....	....	....	X	X	X	X	7	X	X	X	7	....	....	....	X	X	X
Lifesaving Appliance Regulations for T-Boats	....	....	....	9	....	....	....	....	....	....	....	....	....	9	....	....	....	9	....	....	....	....	....	....
Lifesaving Appliance Operation	X	X	X	7	X	X	X	X	X	X	X	X	X	7	X	X	X	7	X	X	....	X	X	X
Lifesaving Appliance Operations for T-Boats	....	....	....	9	....	....	....	....	....	....	....	....	....	9	....	....	....	9	....	....	....	....	....	....
Search and Rescue:																								
Search and Rescue Procedures	X	X	X	....	....	....	....	....	....	X	....	X	....	....	....	....	....	....	X	....	....	X	X	X
AMVER and IAMSAR	X	X	X	....	....	....	....	....	....	....	....	....	....	....	....	....	....	....	....	....	....	X	X	X
Sail/Auxiliary Sail Vessels Addendum (8)	X	X	X	X	X	X	....	....	....	X	X	X	X	X	X	X	X	X	....	....	....	....	....	....

[1] For ocean routes only.
[2] River chart navigation only.
[3] Only on Great Lakes specific modules taken for ''Great Lakes and Inland'' routes.
[4] Including recommended courses, distances, prominent aids to navigation, depths of waters in channels and over hazardous shoals, and other important features of the route, such as character of the bottom. The Coast Guard may accept chart sketching of only a portion or portions of the route for long or extended routes.
[5] COLREGS required if endorsement is not limited to non-COLREGS waters.
[6] For officer endorsements of 1,600 GRT/3,000 GT or more.
[7] Only for officer endorsements of 100 GRT or more.
[8] Sail vessel safety precautions, rules of the road, operations, heavy weather procedures, navigation, maneuvering, and sailing terminology. Applicants for sail/auxiliary sail endorsements to master, mate or operator of uninspected passenger vessels are also tested in the subjects contained in this addendum.
[9] For officer endorsements of less than 100 GRT.

§ 11.920 Subjects for MODU endorsements.

Table 11.920–1 gives the codes used in Table 11.920–2 for MODU endorsements. Table 11.920–2 indicates the examination subjects for each endorsement by the code number.

Table 11.920–1 Codes for MODU Endorsements

1. OIM/Unrestricted
2. OIM/Surface Units Underway

3. OIM/Surface Units on Location
4. OIM/Bottom Bearing Units Underway
5. OIM/Bottom Bearing Units on Location
6. Barge Supervisor
7. Ballast Control Operator

TABLE 11.920–2—SUBJECTS FOR MODU LICENSES

Examination topics	1	2	3	4	5	6	7
Watchkeeping:							
COLREGS	X	X	.....	X	.....	X	.....
"Basic Principles for Navigational Watch"	X	X	X	X	X	X	.....
MODU obstruction lights	X	.....	X	.....	X	X	.....
Meteorology and oceanography:							
Synoptic chart weather forecasting	X	X	X	X	X	X	.....
Characteristics of weather systems	X	X	X	X	X	X	X
Ocean current systems	X	X	X	X	X	X	.....
Tide and tidal current publications	X	X	X	X	X	X	.....
Stability, ballasting, construction and damage control:							
Principles of ship construction, structural members	X	X	X	X	X	X	X
Trim and stability	X	X	X	X	X	X	X
Damaged trim and stability countermeasures	X	X	X	X	.....	X	X
Stability and trim calculations	X	X	X	X	.....	X	X
Load line requirements	X	X	X	X	X	X	X
Operating manual:							
Rig characteristics and limitations	X	X	X	X	X	X	X
Hydrostatics data	X	X	X	X	.....	X	X
Tank tables	X	X	X	X	X	X	X
KG limitations	X	X	X	X	.....	X	X
Severe storm instructions	X	X	X	X	X	X	X
Transit instructions	X	X	.....	X	.....	X	X
On-station instructions	X	.....	X	.....	X	X	X
Unexpected list or trim	X	X	X	X	.....	X	X
Ballasting procedures	X	X	X	.....	.....	X	X
Operation of bilge system	X	X	X	X	.....	X	X
Leg loading calculations	X	.....	.....	X	X	.....	.....
Completion of variable load form	X	X	X	X	X	X	X
Evaluation of variable load form	X	X	X	X	X	X	X
Emergency procedures	X	X	X	X	X	X	X
Maneuvering and handling:							
Anchoring and anchor handling	X	X	X	.....	.....	X	.....
Heavy weather operations	X	X	X	X	X	X	X
Mooring, positioning	X	X	X	X	.....	X	X
Moving, positioning	X	X	.....	X	.....	X	.....
Fire prevention and firefighting appliances:							
Organization of fire drills	X	X	X	X	X	X	X
Classes and chemistry of fire	X	X	X	X	X	X	X
Firefighting systems	X	X	X	X	X	X	X
Firefighting equipment and regulations	X	X	X	X	X	X	X
Basic firefighting and prevention of fires	X	X	X	X	X	X	X
Emergency procedures and contingency plans:							
Temporary repairs	X	X	X	X	.....	X	.....
Fire or explosion	X	X	X	X	X	X	X
Abandon unit	X	X	X	X	X	X	X
Man overboard	X	X	X	X	X	X	X
Heavy weather	X	X	X	X	X	X	X
Collision	X	X	X	X	X	X	X
Failure of ballast control system	X	X	X	.....	.....	X	X
Mooring emergencies	X	.....	X	.....	.....	X	X
Blowouts	X	.....	X	.....	X	X	X
H2S safety	X	.....	X	.....	X	X	X
General Engineering—Power plants and auxiliary systems:							
Marine engineering terminology	X	X	X	X	X	X	X
Engineering equipment, operations and failures	X	X	X	X	X	X	.....
Offshore drilling operations	.....	.....	.....	.....	.....	.....	X
Deck seamanship—general:							
Transfer of personnel	X	X	X	X	X	X	.....
Support boats/helicopters	X	X	X	X	X	X	.....
Cargo stowage and securing	X	X	X	X	X	X	.....
Hazardous materials/dangerous goods precautions	X	X	X	X	X	X	.....
Mooring equipment	X	X	X	X	X	X	.....
Crane use procedures and inspections	X	X	X	X	X	X	.....
Medical care:							
Knowledge and use of:							
First aid	X	X	X	X	X	X	X
First response medical action	X	X	X	X	X	X	X
Maritime law and regulation:							

TABLE 11.920–2—SUBJECTS FOR MODU LICENSES—Continued

Examination topics	1	2	3	4	5	6	7
National maritime law:							
Certification and documentation of vessels	X	X	X	X	X	.....	.....
Ship sanitation	X	X	X	X	X	.....	.....
Regulations for vessel inspection	X	X	X	X	X	.....	.....
Pollution prevention regulations	X	X	X	X	X	X	X
Credentialing regulations	X	X	X	X	X	.....	.....
Rules and regulations for MODUs	X	X	X	X	X	X	.....
International Maritime law:	.....	.....	.....	.....	.....	.....	.....
International Maritime Organization	X	X	X	X	X	.....	.....
International Convention on Load Lines	X	X	X	X	.....	.....	X
MARPOL 73/78	X	X	X	X	X	.....	.....
Personnel Management and Training:							
Ship's business including:							
Required logs and record keeping	X	X	X	X	X	X	.....
Casualty reports and records	X	X	X	X	X	.....	.....
Communications:							
Radio communications and FCC permit	X	X	X	X	X	X	.....
Radiotelephone procedures	X	X	X	X	X	X	.....
Lifesaving/Survival:							
Lifesaving appliance operation (launching, boat handling)	X	X	X	X	X	X	X
Procedures/rules for lifeboats, survival suits, PFDs, life rafts and emergency signals	X	X	X	X	X	X	X
Emergency radio transmissions	X	X	X	X	X	X	X
Survival at sea	X	X	X	X	X	X	X

§ 11.950 Examination subjects for engineer officer endorsements.

Table 11.950–1:—Codes for engineer officer endorsements

1. Chief engineer (unlimited).
2. First assistant engineer (unlimited).
3. Second assistant engineer (unlimited).
4. Third assistant engineer (unlimited).
5. Chief engineer (limited).
6. Assistant engineer (limited).
7. Designated duty engineer (unlimited).
8. Designated duty engineer (4,000 HP).
9. Designated duty engineer (1,000 HP).
10. Chief engineer (uninspected fishing industry vessels).
11. Assistant engineer (uninspected fishing industry vessels).
12. Chief engineer (MODU).
13. Assistant engineer (MODU).
14. Chief engineer (OSV unlimited).
15. Assistant engineer (OSV unlimited).
16. Chief engineer (OSV 4,000 HP).
17. Assistant engineer (OSV 4,000 HP).
18. Electro-technical officer.

BILLING CODE 9110–04–P

Table 11.950-2(a): Subjects for engineer officer endorsements

	1			2			3			4			5			6			7			8		
	S	M	G	S	M	G	S	M	G	S	M	G	S	M	G	S	M	G	S	M	G	S	M	G
General Subjects:																								
Prints and tables	X	X	X	X	X	X	X	X	X	X	X	X	X	X	X	X	X	X	X	X	X	X	X	X
Hand tools							X	X	X	X	X	X				X	X	X	X	X	X	X	X	X
Pipes, fittings, and valves							X	X	X	X	X	X				X	X	X	X	X	X	X	X	X
Hydraulics	X	X	X	X	X	X	X	X	X	X	X	X	X	X	X	X	X	X	X	X	X	X	X	X
Materials science							X	X	X	X	X	X				X	X	X						
Bilge systems				X	X	X	X	X	X	X	X	X				X	X	X	X	X	X	X	X	X
Oily water separators	X	X	X	X	X	X	X	X	X	X	X	X	X	X	X	X	X	X	X	X	X	X	X	X
Sanitary/sewage systems	X	X	X	X	X	X	X	X	X	X	X	X	X	X	X	X	X	X	X	X	X	X	X	X
Freshwater systems				X	X	X	X	X	X	X	X	X				X	X	X	X	X	X	X	X	X
Lubricants							X	X	X	X	X	X				X	X	X	X	X	X	X	X	X
Lubrication systems				X	X	X	X	X	X	X	X	X				X	X	X	X	X	X	X	X	X
Automation systems	X	X	X	X	X	X	X	X	X	X	X	X	X	X	X	X	X	X	X	X	X	X	X	X
Control systems	X	X	X	X	X	X	X	X	X	X	X	X	X	X	X	X	X	X	X	X	X	X	X	X
Propellers/ shafting systems				X	X	X	X	X	X	X	X	X				X	X	X	X	X	X	X	X	X
Machine shop							X	X	X	X	X	X				X	X	X	X	X	X	X	X	X

	1			2			3			4			5			6			7			8		
	S	M	G	S	M	G	S	M	G	S	M	G	S	M	G	S	M	G	S	M	G	S	M	G
Distilling systems				X	X	X	X	X	X	X	X	X				X	X	X	X	X	X			
Pumps							X	X	X	X	X	X				X	X	X	X	X	X	X	X	X
Compressors							X	X	X	X	X	X				X	X	X	X	X	X	X	X	X
Administration	X	X	X	X	X	X							X	X	X				X	X	X	X	X	X
Bearings	X	X	X	X	X	X	X	X	X	X	X	X	X	X	X	X	X	X	X	X	X	X	X	X
Governors	X	X	X	X	X	X	X	X	X	X	X	X	X	X	X	X	X	X	X	X	X	X	X	X
Cooling systems				X	X	X	X	X	X	X	X	X				X	X	X	X	X	X	X	X	X
Instruments							X	X	X	X	X	X				X	X	X	X	X	X	X	X	X
Ship construction and repair							X	X	X	X	X	X				X	X	X	X	X	X	X	X	X
Steering systems	X	X	X	X	X	X	X	X	X	X	X	X	X	X	X	X	X	X	X	X	X	X	X	X
Deck machinery				X	X	X	X	X	X	X	X	X	X	X	X	X	X	X	X	X	X	X	X	X
Ventilation systems				X	X	X	X	X	X	X	X	X	X	X	X	X	X	X	X	X	X	X	X	X
Thermodynamics							X	X	X	X	X	X				X	X	X	X	X	X			
Heat exchangers							X	X	X	X	X	X				X	X	X	X	X	X	X	X	X
Watch duties							X	X	X	X	X	X				X	X	X						
International rules and regulations							X	X	X	X	X	X				X	X	X	X	X	X			
Refrigeration and air conditioning:																								
Theory							X	X	X	X	X	X				X	X	X	X	X	X	X	X	X
Air conditioning				X	X	X	X	X	X	X	X	X				X	X	X	X	X	X	X	X	X

	1			2			3			4			5			6			7			8		
	S	M	G	S	M	G	S	M	G	S	M	G	S	M	G	S	M	G	S	M	G	S	M	G
systems																								
Refrigeration systems				X	X	X	X	X	X	X	X	X				X	X	X	X	X	X	X	X	X
Control systems	X	X	X	X	X	X	X	X	X	X	X	X	X	X	X	X	X	X	X	X	X	X	X	X
Instruments-gauges							X	X	X	X	X	X				X	X	X	X	X	X	X	X	X
Safety	X	X	X	X	X	X	X	X	X	X	X	X	X	X	X	X	X	X	X	X	X	X	X	X
Casualty control	X	X	X	X	X	X	X	X	X	X	X	X	X	X	X	X	X	X	X	X	X	X	X	X
Electricity, electronics and control systems:																								
Theory							X	X	X	X	X	X				X	X	X	X	X	X	X	X	X
General maintenance							X	X	X	X	X	X				X	X	X	X	X	X	X	X	X
Generators							X	X	X	X	X	X				X	X	X	X	X	X	X	X	X
Motors							X	X	X	X	X	X				X	X	X	X	X	X	X	X	X
Motor controllers				X	X	X	X	X	X	X	X	X	X	X	X	X	X	X	X	X	X	X	X	X
Propulsion systems	X	X	X	X	X	X	X	X	X	X	X	X	X	X	X	X	X	X	X	X	X	X	X	X
Distribution systems	X	X	X	X	X	X	X	X	X	X	X	X	X	X	X	X	X	X	X	X	X	X	X	X
Electronic systems	X	X	X	X	X	X	X	X	X	X	X	X	X	X	X	X	X	X	X	X	X	X	X	X
Batteries							X	X	X	X	X	X				X	X	X	X	X	X	X	X	X
Communications							X	X	X	X	X	X				X	X	X	X	X	X	X	X	X

	1			2			3			4			5			6			7			8		
	S	M	G	S	M	G	S	M	G	S	M	G	S	M	G	S	M	G	S	M	G	S	M	G
Safety	X	X	X	X	X	X	X	X	X	X	X	X	X	X	X	X	X	X	X	X	X	X	X	X
Casualty control	X	X	X	X	X	X	X	X	X	X	X	X	X	X	X	X	X	X	X	X	X	X	X	X
Troubleshooting	X	X	X	X	X	X							X	X	X				X	X	X	X	X	X
High voltage systems	X	X	X	X	X	X	X	X	X	X	X	X	X	X	X	X	X	X	X	X	X	X	X	X
Computers and networks	X	X	X	X	X	X	X	X	X	X	X	X	X	X	X	X	X	X	X	X	X	X	X	X
Bridge navigation equipment	X	X	X	X	X	X							X	X	X									
Steam Generators:																								
Steam-theory							X	X		X	X					X	X		X			X		
Main boilers	X			X			X			X			X			X			X			X		
Auxiliary boilers					X	X		X	X		X	X					X	X		X	X		X	X
Feedwater systems				X	X	X	X	X	X	X	X	X				X	X	X	X	X	X	X	X	X
Condensate systems				X	X	X	X	X	X	X	X	X				X	X	X	X	X	X	X	X	X
Recovery systems				X	X	X	X	X	X	X	X	X				X	X	X	X	X	X	X	X	X
Fuel	X			X			X			X			X			X			X			X		
Main fuel systems				X			X			X						X			X			X		
Boiler water chemistry	X			X			X			X			X			X			X			X		
Control systems	X			X			X			X			X			X			X			X		

	1			2			3			4			5			6			7			8		
	S	M	G	S	M	G	S	M	G	S	M	G	S	M	G	S	M	G	S	M	G	S	M	G
Automation systems	X			X			X			X			X			X			X			X		
Safety	X			X			X			X			X			X			X			X		
Casualty control	X			X			X			X			X			X			X			X		
Steam engines:																								
Main turbines	X			X			X			X			X			X			X			X		
Auxiliary turbines				X	X		X	X		X	X					X	X		X	X		X		
Governor systems	X			X			X			X			X			X			X			X		
Control systems	X			X			X			X			X			X			X			X		
Automation systems	X			X			X			X			X			X			X			X		
Lubrication systems				X			X			X						X			X			X		
Drive systems	X			X			X			X			X			X			X			X		
Auxiliary diesels	X			X			X			X			X			X			X			X		
Safety	X			X			X			X			X			X			X			X		
Casualty control	X			X			X			X			X			X			X			X		
Motor propulsion:																								
Fundamentals								X			X						X			X			X	
Main engines		X			X			X			X			X			X			X			X	
Auxiliary engines		X			X			X			X			X			X			X			X	
Starting systems					X			X			X			X			X			X			X	
Lubrication					X			X			X			X			X			X			X	

	1			2			3			4			5			6			7			8		
	S	M	G	S	M	G	S	M	G	S	M	G	S	M	G	S	M	G	S	M	G	S	M	G
systems																								
Fuel		X			X			X			X			X			X			X			X	
Fuel systems		X			X			X			X			X			X			X			X	
Fuel injection systems		X			X			X			X			X			X			X			X	
Intake systems								X			X						X			X			X	
Exhaust systems								X			X						X			X			X	
Cooling systems								X			X						X			X			X	
Air-charging systems		X			X			X			X			X			X			X			X	
Drive systems								X			X						X			X			X	
Control systems		X			X			X			X			X			X			X			X	
Automation systems		X			X			X			X			X			X			X			X	
Governors		X			X			X			X			X			X			X			X	
Steam systems					X			X			X						X			X			X	
Water chemistry		X			X			X			X			X			X			X			X	
Safety		X			X			X			X			X			X			X			X	
Casualty control		X			X			X			X			X			X			X			X	
Safety:																								
Fire theory	X	X	X	X	X	X	X	X	X	X	X	X	X	X	X	X	X	X	X	X	X	X	X	X
Fire prevention	X	X	X	X	X	X	X	X	X	X	X	X	X	X	X	X	X	X	X	X	X	X	X	X
Fire fighting	X	X	X	X	X	X	X	X	X	X	X	X	X	X	X	X	X	X	X	X	X	X	X	X
Flooding	X	X	X	X	X	X	X	X	X	X	X	X	X	X	X	X	X	X	X	X	X	X	X	X

	1			2			3			4			5			6			7			8		
	S	M	G	S	M	G	S	M	G	S	M	G	S	M	G	S	M	G	S	M	G	S	M	G
Dewatering	X	X	X	X	X	X	X	X	X	X	X	X	X	X	X	X	X	X	X	X	X	X	X	X
Stability and trim	X	X	X	X	X	X	X	X	X	X	X	X	X	X	X	X	X	X	X	X	X	X	X	X
Damage control	X	X	X	X	X	X	X	X	X	X	X	X	X	X	X	X	X	X	X	X	X	X	X	X
Emergency equipment and lifesaving appliances.																								
General safety	X	X	X	X	X	X	X	X	X	X	X	X	X	X	X	X	X	X	X	X	X	X	X	X
Hazardous materials	X	X	X	X	X	X	X	X	X	X	X	X	X	X	X	X	X	X	X	X	X	X	X	X
Pollution prevention	X	X	X	X	X	X	X	X	X	X	X	X	X	X	X	X	X	X	X	X	X	X	X	X
Inspections and surveys	X	X	X	X	X	X							X	X	X				X	X	X			
U.S. rules and regulations	X	X	X	X	X	X	X	X	X	X	X	X	X	X	X	X	X	X	X	X	X	X	X	X
Gas Turbines																								
Configurations									X			X						X			X			X
Fundamentals									X			X						X			X			X
Thermo-dynamics			X			X			X			X			X			X			X			X
Construction									X			X						X			X			X
Operating parameters			X			X			X			X			X			X			X			X
Start systems									X			X						X			X			X

	1			2			3			4			5			6			7			8		
	S	M	G	S	M	G	S	M	G	S	M	G	S	M	G	S	M	G	S	M	G	S	M	G
Lubrication systems			X			X			X			X			X			X			X			X
Fuel systems			X			X			X			X			X			X			X			X
Drive systems						X			X			X			X			X			X			X
Bleed air systems									X			X						X			X			X
Intake and exhaust systems									X			X						X			X			X
Instrumentation and controls			X			X			X			X			X			X			X			X
Maintenance			X			X			X			X			X			X			X			X
Inspection			X			X									X						X			X
Troubleshooting			X			X									X						X			X
Casualty control			X			X			X			X			X			X			X			X
Management level																								
Management skills	X	X	X	X	X	X							X	X	X									
Crisis management	X	X	X	X	X	X							X	X	X									
Shipyard	X	X	X	X	X	X							X	X	X									
Inspections-surveys	X	X	X	X	X	X							X	X	X									
Vessel layup	X	X	X	X	X	X							X	X	X									
Employee familiarization	X	X	X	X	X	X							X	X	X									

	1			2			3			4			5			6			7			8		
	S	M	G	S	M	G	S	M	G	S	M	G	S	M	G	S	M	G	S	M	G	S	M	G
Operational planning	X	X	X	X	X	X							X	X	X									
Assessing competency	X	X	X	X	X	X							X	X	X									
Management practices	X	X	X	X	X	X							X	X	X									
Arbitration	X	X	X	X	X	X							X	X	X									
Internal documents	X	X	X	X	X	X							X	X	X									
International laws-conventions	0	0	0	0	0	0							X	X	X									
Technical analysis	X	X	X	X	X	X							X	X	X									
Maintenance systems	X	X	X	X	X	X							X	X	X									
Troubleshooting	X	X	X	X	X	X							X	X	X									
Codes and regulations	X	X	X	X	X	X							X	X	X									

Note: Numbers on the top row of this table represent endorsement titles found in table 11.950-1
S – Steam propulsion
M – Motor propulsion
G – Gas turbine propulsion
0 – STCW only

Table 11.950-2(b): Subjects for engineer officer endorsements

	9			10		11		12		13		14		15		16		17		18
	S	M	G	S	M	S	M	S	M	S	M	S	M	S	M	S	M	S	M	ALL
General Subjects:																				
Prints and tables	X	X	X	X	X	X	X	X	X	X	X	X	X	X	X	X	X	X	X	X
Hand tools						X	X			X	X			X	X			X	X	X
Pipes, fittings, and valves						X	X			X	X			X	X			X	X	
Hydraulics	X	X	X	X	X	X	X	X	X	X	X	X	X	X	X	X	X	X	X	X
Materials science																				
Bilge systems	X	X	X			X	X			X	X			X	X			X	X	
Oily water separators	X	X	X	X	X	X	X	X	X	X	X	X	X	X	X	X	X	X	X	X
Sanitary/sewage systems	X	X	X	X	X	X	X	X	X	X	X	X	X	X	X	X	X	X	X	
Freshwater systems	X	X	X			X	X			X	X			X	X			X	X	
Lubricants	X	X	X			X	X			X	X			X	X			X	X	
Lubrication systems	X	X	X			X	X			X	X			X	X			X	X	
Automation systems	X	X	X	X	X	X	X	X	X	X	X	X	X	X	X	X	X	X	X	X
Control systems	X	X	X	X	X	X	X	X	X	X	X	X	X	X	X	X	X	X	X	X
Propellers/ shafting systems	X	X	X			X	X			X	X			X	X			X	X	
Machine shop	X	X	X			X	X			X	X			X	X			X	X	

	9			10		11		12		13		14		15		16		17		18
	S	M	G	S	M	S	M	S	M	S	M	S	M	S	M	S	M	S	M	ALL
Distilling systems						X	X			X	X									
Pumps	X	X	X			X	X			X	X			X	X			X	X	
Compressors	X	X	X			X	X			X	X			X	X			X	X	
Administration	X	X	X	X	X			X	X			X	X			X	X			
Bearings	X	X	X	X	X	X	X	X	X	X	X	X	X	X	X	X	X	X	X	
Governors	X	X	X	X	X	X	X	X	X	X	X	X	X	X	X	X	X	X	X	X
Cooling systems	X	X	X			X	X			X	X			X	X			X	X	
Instruments	X	X	X			X	X			X	X			X	X			X	X	
Ship construction and repair	X	X	X	X	X	X	X	X	X	X	X	X	X	X	X	X	X	X	X	
Steering systems	X	X	X	X	X	X	X	X	X	X	X	X	X	X	X	X	X	X	X	X
Deck machinery	X	X	X	X	X	X	X	X	X	X	X	X	X	X	X	X	X	X	X	X
Ventilation systems	X	X	X			X	X			X	X			X	X			X	X	X
Thermodynamics																				
Heat exchangers	X	X	X	X	X	X	X	X	X	X	X	X	X	X	X	X	X	X	X	
Watch duties				X	X	X	X	X	X	X	X	X	X	X	X	X	X	X	X	
International rules and regulations						X	X			X	X			X	X			X	X	
Refrigeration and air conditioning:																				
Theory	X	X	X			X	X			X	X			X	X			X	X	
Air conditioning	X	X	X	X	X	X	X	X	X	X	X	X	X	X	X	X	X	X	X	X

	9			10		11		12		13		14		15		16		17		18
	S	M	G	S	M	S	M	S	M	S	M	S	M	S	M	S	M	S	M	ALL
systems																				
Refrigeration systems	X	X	X	X	X	X	X	X	X	X	X	X	X	X	X	X	X	X	X	X
Control systems	X	X	X	X	X	X	X	X	X	X	X	X	X	X	X	X	X	X	X	X
Instruments-gauges	X	X				X	X			X	X			X	X			X	X	X
Safety	X	X	X	X	X	X	X	X	X	X	X	X	X	X	X	X	X	X	X	X
Casualty control	X	X	X	X	X	X	X	X	X	X	X	X	X	X	X	X	X	X	X	X
Electricity, electronics and control systems:																				
Theory	X	X	X			X	X			X	X			X	X			X	X	X
General maintenance	X	X	X			X	X			X	X			X	X			X	X	X
Generators	X	X	X	X	X	X	X	X	X	X	X	X	X	X	X	X	X	X	X	X
Motors	X	X	X			X	X			X	X			X	X			X	X	X
Motor controllers	X	X	X	X	X	X	X	X	X	X	X	X	X	X	X	X	X	X	X	X
Propulsion systems	X	X	X	X	X	X	X	X	X	X	X	X	X	X	X	X	X	X	X	X
Distribution systems	X	X	X	X	X	X	X	X	X	X	X	X	X	X	X	X	X	X	X	X
Electronic systems	X	X	X	X	X	X	X	X	X	X	X	X	X	X	X	X	X	X	X	X
Batteries	X	X	X			X	X			X	X			X	X			X	X	X
Communications	X	X	X	X	X	X	X	X	X	X	X	X	X	X	X	X	X	X	X	X

	9			10		11		12		13		14		15		16		17		18
	S	M	G	S	M	S	M	S	M	S	M	S	M	S	M	S	M	S	M	ALL
Safety	X	X	X	X	X	X	X	X	X	X	X	X	X	X	X	X	X	X	X	X
Casualty control	X	X	X	X	X	X	X	X	X	X	X	X	X	X	X	X	X	X	X	X
Troubleshooting	X	X	X	X	X			X	X			X	X			X	X			X
High voltage systems								X	X			X	X			X	X			X
Computers and networks								X	X			X	X			X	X			X
Bridge navigation equipment								X	X			X	X			X	X			X
Steam Generators:																				
Steam-theory	X					X	X			X	X			X	X			X	X	
Main boilers	X			X		X		X		X		X		X						
Auxiliary boilers		X	X		X		X		X		X		X		X		X		X	
Feedwater systems	X	X	X		X	X	X		X	X	X	X	X	X	X		X	X	X	
Condensate systems	X	X	X		X	X	X		X	X	X	X	X	X	X		X	X	X	
Recovery systems	X	X	X		X	X	X		X	X	X	X	X	X	X		X	X	X	
Fuel	X			X		X		X		X		X		X		X		X		
Main fuel systems				X		X				X				X				X		
Boiler water chemistry	X			X		X		X		X		X		X		X		X		
Control systems	X			X		X		X		X		X		X		X		X		X

	9			10		11		12		13		14		15		16		17		18
	S	M	G	S	M	S	M	S	M	S	M	S	M	S	M	S	M	S	M	ALL
Automation systems	X			X		X		X		X		X		X		X		X		X
Safety	X			X		X		X		X		X		X		X		X		X
Casualty control	X			X		X		X		X		X		X		X		X		X
Steam engines:																				
Main turbines	X			X		X		X		X		X		X		X		X		
Auxiliary turbines	X					X				X				X				X		
Governor systems	X			X		X		X		X		X		X		X		X		
Control systems	X			X		X		X		X		X		X		X		X		X
Automation systems	X			X		X		X		X		X		X		X		X		X
Lubrication systems	X					X				X				X				X		
Drive systems	X			X		X		X		X		X		X		X		X		
Safety	X			X		X		X		X		X		X		X		X		X
Casualty control	X			X		X		X		X		X		X		X		X		X
Motor propulsion:																				
Fundamentals		X					X				X				X				X	
Main engines		X			X		X		X		X		X		X		X		X	
Auxiliary engines		X			X		X		X		X		X		X		X		X	
Starting systems		X			X		X		X		X		X		X		X		X	
Lubrication		X			X		X		X		X		X		X		X		X	

	9			10		11		12		13		14		15		16		17		18
	S	M	G	S	M	S	M	S	M	S	M	S	M	S	M	S	M	S	M	ALL
systems																				
Fuel		X			X		X		X		X		X		X		X		X	
Fuel systems		X			X		X		X		X		X		X		X		X	
Fuel injection systems		X			X		X		X		X		X		X		X		X	
Intake systems		X					X				X				X				X	
Exhaust systems		X					X				X				X				X	
Cooling systems		X					X				X				X				X	
Air-charging systems		X			X		X		X		X		X		X		X		X	
Drive systems		X			X		X		X		X		X		X		X		X	
Control systems		X			X		X		X		X		X		X		X		X	X
Automation systems		X			X		X		X		X		X		X		X		X	X
Governors		X			X		X		X		X		X		X		X		X	X
Steam systems		X					X				X				X				X	
Water chemistry		X					X				X				X				X	
Safety		X			X		X		X		X		X		X		X		X	
Casualty control		X			X		X		X		X		X		X		X		X	
Safety:																				
Fire theory	X	X	X	X	X	X	X	X	X	X	X	X	X	X	X	X	X	X	X	X
Fire prevention	X	X	X	X	X	X	X	X	X	X	X	X	X	X	X	X	X	X	X	X
Fire fighting	X	X	X	X	X	X	X	X	X	X	X	X	X	X	X	X	X	X	X	X
Flooding	X	X	X	X	X	X	X	X	X	X	X	X	X	X	X	X	X	X	X	X

	9			10		11		12		13		14		15		16		17		18
	S	M	G	S	M	S	M	S	M	S	M	S	M	S	M	S	M	S	M	ALL
Dewatering	X	X	X	X	X	X	X	X	X	X	X	X	X	X	X	X	X	X	X	X
Stability and trim	X	X	X	X	X	X	X	X	X	X	X	X	X	X	X	X	X	X	X	X
Damage control	X	X	X	X	X	X	X	X	X	X	X	X	X	X	X	X	X	X	X	X
Emergency equipment and lifesaving appliances.																				
General safety	X	X	X	X	X	X	X	X	X	X	X	X	X	X	X	X	X	X	X	X
Hazardous materials	X	X	X	X	X	X	X	X	X	X	X	X	X	X	X	X	X	X	X	X
Pollution	X	X	X	X	X	X	X	X	X	X	X	X	X	X	X	X	X	X	X	X
Inspections and surveys	X	X	X	X	X			X	X			X	X			X	X			
U.S. rules and regulations	X	X	X	X	X	X	X	X	X	X	X	X	X	X	X	X	X	X	X	X
Gas Turbines																				
Configurations			X																	
Fundamentals			X																	
Thermo-dynamics			X																	
Construction			X																	
Operating parameters			X																	
Start systems			X																	
Lubrication			X																	

	9			10		11		12		13		14		15		16		17		18
	S	M	G	S	M	S	M	S	M	S	M	S	M	S	M	S	M	S	M	ALL
systems																				
Fuel systems			X																	
Drive systems			X																	
Bleed air systems			X																	
Intake and exhaust systems			X																	
Instrumentation and controls			X																	
Maintenance			X																	
Inspection			X																	
Troubleshooting			X																	
Casualty control			X																	
Management level																				
Management skills				X	X			X	X			X	X			X	X			
Crisis management				X	X			X	X			X	X			X	X			
Shipyard				X	X			X	X			X	X			X	X			
Inspections-surveys				X	X			X	X			X	X			X	X			
Vessel layup				X	X			X	X			X	X			X	X			
Employee familiarization				X	X			X	X			X	X			X	X			

	9			10		11		12		13		14		15		16		17		18
	S	M	G	S	M	S	M	S	M	S	M	S	M	S	M	S	M	S	M	ALL
Operational planning				X	X			X	X			X	X			X	X			
Assessing competency				X	X			X	X			X	X			X	X			
Management practices				X	X			X	X			X	X			X	X			
Arbitration				X	X			X	X			X	X			X	X			
Internal documents				X	X			X	X			X	X			X	X			
International laws-conventions				0	0			0	0			0	0			0	0			
Technical analysis				X	X			X	X			X	X			X	X			
Maintenance systems				X	X			X	X			X	X			X	X			
Troubleshooting				X	X			X	X			X	X			X	X			
Codes and regulations				X	X			X	X			X	X			X	X			

Note: Numbers on the top row of this table represent endorsement titles found in table 11.950-1
S – Steam propulsion
M – Motor propulsion
G – Gas turbine propulsion
0 – STCW only

BILLING CODE 9110–04–C

Subpart J—Recognition of Other Parties' STCW Certificates

§ 11.1001 Purpose of rules.

(a) The rules in this subpart implement Regulation I/10 of the International Convention on Standards of Training, Certification and Watchkeeping for Seafarers, 1978 as amended (STCW) by establishing requirements and procedures for the recognition and endorsement of officer certificates of competence issued by other Parties to STCW (incorporated by reference, see § 11.102 of this part).

(b) Specific regulations on the use of non-U.S. credentialed officers and mariners with officer endorsements (except those of master) are found in § 15.720 of this subchapter.

§ 11.1003 General requirements.

(a) The Coast Guard recognizes certificates only from countries that the United States has assured itself comply with requirements of the STCW Convention and STCW Code (incorporated by reference, see § 11.102 of this part).

(b) The Coast Guard will publish a list of countries whose certificates it will recognize.

(c) The Coast Guard will issue a ''Certificate attesting recognition'' to an applicant after ensuring the validity and authenticity of the credential (certificate of competency) issued by his or her country of origin.

(d) No application from a non-U.S. citizen for a ''Certificate attesting recognition'' issued pursuant to this subpart will be accepted unless the applicant's employer satisfies the requirements of § 11.1105 of this subpart.

§ 11.1005 Employer application requirements.

(a) The employer must submit the following to the Coast Guard, as a part of the applicant's application for a ''Certificate attesting recognition'', on behalf of the applicant:

(1) A signed report that contains all material disciplinary actions related to the applicant, such as, but not limited to, violence or assault, theft, drug and alcohol policy violations, and sexual harassment, along with an explanation of the criteria used by the employer to determine the materiality of those actions; and

(2) A signed report regarding an employer-conducted background check. The report must contain:

(i) A statement that the applicant has successfully undergone an employer-conducted background check;

(ii) A description of the employer-conducted background check; and

(iii) All information derived from the employer-conducted background check.

(b) If a ''Certificate attesting recognition'' is issued to the applicant, the employer must maintain a detailed record of the seaman's total service on all authorized U.S. flag vessels, and must make that information available to the Coast Guard upon request.

(c) In addition to the initial material disciplinary actions report and the initial employer-conducted background check specified in paragraph (a) of this section, the employer must submit an annual material disciplinary actions report to update whether there have been any material disciplinary actions related to the applicant since the last material disciplinary actions report was submitted to the Coast Guard.

(d) The employer must also submit to the Coast Guard the applicant's copy of the following:

(1) Base credential (certificate of competency), as well as any other documentary evidence of proficiency (such as Basic Safety Training, Basic/Advanced Firefighting, Survival Craft, etc.) to verify that the applicant meets the manning requirements. The documentation must include any necessary official translation into the English language;

(2) Valid medical certificate; and

(3) Valid identification document, such as a passport or Seaman's Identity Document (SID).

(e) The employer is subject to the civil penalty provisions specified in 46 U.S.C. 8103(f) for any violation of this section.

§ 11.1007 Basis for denial.

An applicant for a ''Certificate attesting recognition'' of an officer certificate issued by another party must:

(a) Have no record of material disciplinary actions during employment on any U.S. flag vessel of the employer, as verified in writing by the owner or managing operator of the U.S. flag vessels on which the applicant will be employed; and

(b) Have successfully completed an employer-conducted background check, to the satisfaction of both the employer and the Coast Guard.

§ 11.1009 Restrictions.

(a) A ''certificate attesting recognition'' of an STCW certificate issued by another party to a non-resident alien under this subpart authorizes service only on vessels owned and/or operated in accordance with § 15.720 of this subchapter.

(b) The certificate will be issued for service only in the department for which the application was submitted.

(c) No other certificate is authorized, unless all applicable requirements of this subpart and the STCW Convention (incorporated by reference, see § 11.102 of this part) are met, and the employer makes subsequent application for a new endorsement.

(d) This certificate is not valid for service on U.S. vessels operating in U.S. waters.

Subpart K—Officers on a Passenger Ship When on an International Voyage

§ 11.1101 Purpose of rules.

The rules in this subpart establish requirements for officers serving on passenger ships as defined in § 11.1103 of this subpart.

§ 11.1103 Definitions.

''Passenger ship'' in this subpart means a ship carrying more than 12 passengers when on an international voyage.

§ 11.1105 General requirements for officer endorsements.

(a) To serve on a passenger vessel on international voyages, masters, deck officers, chief engineers and engineer officers, must:

(1) Meet the appropriate requirements of the STCW Regulation V/2 and of Section A–V/2 of the STCW Code (incorporated by reference, see § 11.102 of this part); and

(2) Hold documentary evidence as proof of meeting these requirements through approved or accepted training.

(b) Seafarers who are required to be trained in accordance with paragraph (a) of this section must at intervals not exceeding 5 years, provide evidence of maintaining the standard of competence.

(c) The Coast Guard will accept onboard training and experience, through evidence of 1 year of sea service within the last 5 years, as meeting the requirements of paragraph (b) of this section.

(d) Personnel serving onboard small passenger vessels engaged in domestic, near-coastal voyages, as defined in § 11.301(j) of this subchapter, are not subject to any further obligation for the purpose of this STCW requirement.

31. Revise part 12 to read as follows:

PART 12—REQUIREMENTS FOR RATING ENDORSEMENTS

Subpart A—General

Sec.

12.101 Purpose.
12.103 Incorporation by reference.

12.105 Paperwork approval.

Subpart B–General Requirements for Rating Endorsements

12.201 General requirements for domestic and STCW rating endorsements.
12.203 Creditable service and equivalents for domestic and STCW ratings endorsements.
12.205 Examination procedures and denial of rating and STCW endorsements.

Subpart C—[Reserved]

Subpart D—Requirements for Domestic Deck Rating Endorsements

12.401 General requirements for able seaman (A/B) endorsements.
12.403 Service or training requirements for able seaman (A/B) endorsements.
12.405 Examination and demonstration of ability for able seaman (A/B) endorsements.
12.407 General requirements for lifeboatman endorsements.
12.409 General requirements for lifeboatman-limited endorsements.

Subpart E—Requirements for Domestic Engineer Rating Endorsements

12.501 General requirements for a qualified member of the engine department (QMED).
12.503 Service or training requirements.
12.505 Examination requirements.

Subpart F—Requirements for STCW rating endorsements

12.601 General requirements for STCW rating endorsements.
12.603 Requirements to qualify for an STCW endorsement as able seafarer-deck.
12.605 Requirements to qualify for an STCW endorsement as ratings forming part of a navigational watch (RFPNW).
12.607 Requirements to qualify for an STCW endorsement as ratings as able seafarer-engine.
12.609 Requirements to qualify for an STCW endorsement as Ratings Forming Part of an Engineering Watch (RFPEW).
12.611 Requirements to qualify for an STCW endorsement as electro-technical rating on vessels powered by main propulsion machinery of 750 kW/1,000 HP or more.
12.613 Requirements to qualify for an STCW endorsement in proficiency in survival craft and rescue boats other than fast rescue boats (PSC).
12.615 Requirements to qualify for an STCW endorsement in proficiency in survival craft and rescue boats other than lifeboats and fast rescue boats—limited (PSC—limited).
12.617 Requirements to qualify for an STCW endorsement in proficiency in fast rescue boats.
12.619 Requirements to qualify for an STCW endorsement as medical first-aid provider.
12.621 Requirements to qualify for an STCW endorsement as person in charge of medical care.
12.623 Requirements to qualify for an STCW endorsement as Global Maritime Distress and Safety System (GMDSS) at-sea maintainer.
12.625 Requirements to qualify for an STCW endorsement as vessel personnel with designated security duties.
12.627 Requirements to qualify for an STCW endorsement for security awareness.

Subpart G—Entry-Level Domestic Ratings and Miscellaneous Ratings

12.701 Credentials required for entry-level and miscellaneous ratings.
12.703 General requirements for entry-level ratings.
12.705 Endorsements for persons enrolled in a Maritime Administration approved training program.
12.707 Student observers.
12.709 Apprentice engineers.
12.711 Apprentice mate.

Subpart H—Non-resident Alien Members of the Steward's Department on U.S. Flag Large Passenger Vessels

12.801 Purpose.
12.803 General requirements.
12.805 Employer requirements.
12.807 Basis for denial.
12.809 Citizenship and identity.
12.811 Restrictions.
12.813 Alternative means of compliance.

Subpart I—Crewmembers on a Passenger Ship on an International Voyage

12.901 Purpose of rules.
12.903 Definition.
12.905 General requirements.

Authority: 31 U.S.C. 9701; 46 U.S.C. 2101, 2103, 2110, 7301, 7302, 7503, 7505, 7701, and 70105; Department of Homeland Security Delegation No. 0170.1.

Subpart A—General

§ 12.101 Purpose.

(a) The purpose of this part is to provide—

(1) A comprehensive and adequate means of determining and verifying the professional qualifications an applicant must possess to be eligible for certification to serve on merchant vessels of the United States; and

(2) A means of determining that an applicant is qualified to receive the endorsement required by the International Convention on Standards of Training, Certification and Watchkeeping for Seafarers, 1978, as amended (the STCW Convention or STCW).

(b) The requirements applicable to approved and accepted training, training for a particular rating endorsement, and training and assessment associated with meeting the standards of competence established by the STCW Convention have been moved to part 10, subpart D.

§ 12.103 Incorporation by reference.

(a) Certain material is incorporated by reference into this part with the approval of the Director of the Federal Register under 5 U.S.C. 552(a) and 1 CFR part 51. To enforce any edition other than that specified in this section, the Coast Guard must publish a notice of change in the **Federal Register** and the material must be available to the public. All approved material is available for inspection at the National Archives and Records Administration (NARA). For information on the availability of this material at NARA, call 202–741–6030 or go to *http://www.archives.gov/federal_register/code_of_federal_regulations/ibr_locations.html.* Also, it is available for inspection at the Coast Guard, Office of Operating and Environmental Standards (CG–5221), 2100 Second Street SW, Stop 7126, Washington, DC 20593–7126, and is available from the sources indicated in this section.

(b) International Maritime Organization (IMO), 4 Albert Embankment, London SE1 7SR, England.

(1) The Seafarers' Training, Certification and Watchkeeping Code as amended (the STCW Code), incorporation by reference approved for §§ 12.601, 12.603, 12.605, 12.607, 12.609, 12.611, 12.613, 12.615, 12.617, 12.619, 12.621, 12.623, 12.811, and 12.905.

(2) [Reserved]

§ 12.105 Paperwork approval.

(a) This section lists the control numbers assigned by the Office of Management and Budget under the Paperwork Reduction Act of 1980 (Pub. L. 96–511) for the reporting and record-keeping requirements in this part.

(b) The following control numbers have been assigned to the sections indicated:

(1) OMB 1625–0079—46 CFR 12.217 and 12.301.

(2) [Reserved]

Subpart B—General Requirements for Rating Endorsements

§ 12.201 General requirements for domestic and STCW rating endorsements.

(a) *General.* (1) An MMC issued to a deck or engineer officer will be endorsed for all entry-level ratings and any other ratings for which they qualify under this part.

(2) The authorized holder of any valid rating endorsement may serve in any capacity in the staff department of a vessel, except in those capacities requiring a staff officer; except that whenever the service includes the handling of food, no person may be so employed unless his or her credential bears the food handler's endorsement ''(F.H.)''.

(3) When an applicant meets the requirements for certification set forth in this part, the Coast Guard will issue the appropriate endorsement.

(b) *Physical and medical requirements.* The physical and medical requirements applicable to the endorsements in this subpart are found in 46 CFR, part 10, subpart C.

§ 12.203 Creditable service and equivalents for domestic and STCW ratings endorsements.

Applicants for endorsements should refer to § 10.232 of this subchapter for information regarding requirements for documentation and proof of sea service.

§ 12.205 Examination procedures and denial of rating and STCW endorsements.

(a) The examination fee set out in Table 10.219(a) in § 10.219 of this subchapter must be paid before the applicant may take the first examination section.

(b) Upon receipt of application for a rating endorsement, the Coast Guard will give any required examination as soon as practicable after determining that the applicant is otherwise qualified for the endorsement.

(c) An applicant for a rating endorsement who has been duly examined and failed the examination may seek reexamination at any time after the initial examination. However, an applicant who fails an examination for the third time must wait 90 days before re-testing. All examinations and retests must be completed within 1 year of approval for examination.

(d) Upon receipt of an application for an STCW endorsement, the Coast Guard will evaluate the applicant's qualifications. The Coast Guard will issue the appropriate endorsement after determining that the applicant satisfactorily meets all requirements for any requested STCW rating or qualification.

Subpart C—[Reserved]

Subpart D—Requirements for Domestic Deck Rating Endorsements

§ 12.401 General requirements for able seaman (A/B) endorsements.

(a) *General.* An able seaman (A/B) is any person below officer and above the ordinary seaman who holds an MMC or MMD endorsed as A/B by the Coast Guard.

(b) *Categories.* The following categories of able seaman endorsements are established:

(1) Able seaman—any waters, unlimited.

(2) Able seaman—limited.

(3) Able seaman—special.

(4) Able seaman—offshore supply vessels.

(5) Able seaman—sail.

(6) Able seaman—fishing industry.

(c) *Requirements for certification.* To qualify for an endorsement as able seaman, an applicant must:

(1) Be at least 18 years of age;

(2) Pass the prescribed physical and medical examination requirements specified in 46 CFR, part 10, subpart C;

(3) Present evidence of having passed a chemical test for dangerous drugs or of qualifying for an exemption from testing described in § 16.220 of this subchapter;

(4) Meet the sea service or training requirements set forth in this part;

(5) Pass an examination for able seaman;

(6) Qualify for an endorsement as lifeboatman or lifeboatman-limited; and

(7) Speak and understand the English language as would be required in performing the general duties of able seaman and during an emergency aboard ship.

(d) *Additional requirements.* (1) The holder of an MMC or MMD endorsed for the rating of A/B may serve in any rating in the deck department without obtaining an additional endorsement, provided:

(i) That the holder possesses the appropriate A/B endorsement for the service of the vessel; and

(ii) That the holder possesses the appropriate STCW endorsement when serving as an able seafarer-deck or Ratings Forming Part of the Navigational Watch (RFPNW) on a seagoing ship of 200 GRT/500 GT or more.

(2) After [EFFECTIVE DATE OF THIS RULE] any MMC endorsed as A/B will also be endorsed as lifeboatman or lifeboatman-limited, as appropriate.

(3) The A/B endorsement will clearly describe the type of rating that it represents (See paragraph (a) of this section).

§ 12.403 Service or training requirements for able seaman (A/B) endorsements.

(a) The minimum service required to qualify for the various categories of endorsement as able seaman is:

(1) *Able seaman—any waters, unlimited.* Three years of service on deck on vessels operating on oceans or the Great Lakes.

(2) *Able seaman—limited.* Eighteen months of service on deck on vessels of 100 GRT or more which operate in a service not exclusively confined to the rivers and smaller inland lakes of the United States.

(3) *Able seaman—special.* Twelve months of service on deck on vessels operating on oceans or the navigable waters of the United States, including the Great Lakes.

(4) *Able seaman—offshore supply vessels.* Six months of service on deck on vessels operating on oceans or the navigable waters of the United States, including the Great Lakes.

(5) *Able seaman—sail.* Six months of service on deck on sailing school vessels, oceanographic research vessels powered primarily by sail, or equivalent sailing vessels operating on oceans or navigable waters of the United States, including the Great Lakes.

(6) *Able seaman—fishing industry.* Six months of service on deck, not as a processor, onboard vessels operating on oceans or navigable waters of the United States, including the Great Lakes.

(b) Approved training programs may be substituted for the required periods of service on deck as follows:

(1) A graduate of a school ship may be qualified for a rating endorsement as A/B, without further service, upon satisfactory completion of the course of instruction. For this purpose, school ship is interpreted to mean an institution that offers a complete approved course of instruction, including a period of at-sea training, in the skills appropriate to the rating of A/B.

(2) Training programs, other than those classified as a school ship, may be substituted for up to one-third of the required service on deck. The service/training ratio for each program is determined by the Coast Guard, which may allow a maximum of 3 days of deck service credit for each day of instruction.

§ 12.405 Examination and demonstration of ability for able seaman (A/B) endorsements.

(a) Before an applicant is issued an endorsement as an A/B, he or she must prove to the satisfaction of the Coast Guard, by oral or other means of examination, and by actual demonstration in a Coast Guard-approved course, his or her knowledge of seamanship and the ability to carry out effectively all the duties that may be required of an A/B, including those of a lifeboatman or lifeboatman-limited.

(b) The examination, whether administered orally or by other means, must be conducted only in the English language and must consist of questions regarding:

(1) The applicant's knowledge of nautical terms, use of the compass for navigation, running lights, passing signals, and fog signals for vessels on the high seas, inland waters, or Great Lakes, and distress signals; and

(2) The applicant's knowledge of commands in handling the wheel by obeying orders passed to him or her as helmsman, and knowledge of the use of the engineroom telegraph.

(c) The applicant must demonstrate knowledge of the principal knots, bends, splices, and hitches in common use by actually making them as part of a Coast Guard-approved course.

(d) The applicant must demonstrate, to the satisfaction of the Coast Guard, knowledge of pollution laws and regulations, procedures for discharge containment and cleanup, and methods for disposal of sludge and waste material from cargo and fueling operations.

§ 12.407 General requirements for lifeboatman endorsements.

(a) *General.* Every person serving under the authority of a rating endorsement as lifeboatman on any United States vessel requiring lifeboatman must hold an endorsement as lifeboatman. No endorsement as lifeboatman is required of any person employed on any unrigged vessel, except on a seagoing barge and on a tank barge navigating waters other than rivers and/or canals.

(b) *Requirements for Certification.* (1) To qualify for an endorsement as lifeboatman, an applicant must:

(i) Be at least 18 years of age;

(ii) Pass the prescribed physical and medical examination requirements specified in 46 CFR, part 10, subpart C; and

(iii) Present evidence of having passed a chemical test for dangerous drugs or qualifying for an exemption for testing described in § 16.220 of this subchapter.

(2) To be eligible for an endorsement as lifeboatman, an applicant must meet one of the following sea service requirements:

(i) At least 12 months of sea service in any department of vessels on ocean, coastwise, inland, and Great Lakes; or

(ii) At least 6 months of sea service in any department of vessels and successful completion of an approved course.

(3) Before an applicant is issued an endorsement as a lifeboatman, he or she must prove to the satisfaction of the Coast Guard by oral or other means of examination, and by actual practical demonstration of abilities, his or her knowledge of seamanship and the ability to carry out effectively all the duties that may be required of a lifeboatman.

(4) The practical demonstration must consist of a demonstration of the applicant's ability to:

(i) Take charge of a survival craft or rescue boat during and after launch;

(ii) Operate a survival craft engine;

(iii) Demonstrate the ability to row by actually pulling an oar in the boat;

(iv) Manage a survival craft and survivors after abandoning ship;

(v) Safely recover survival craft and rescue boats; and

(vi) Use locating and communication devices.

(5) The examination, whether administered orally or by other means, must be conducted only in the English language and must consist of questions regarding:

(i) Lifeboats and liferafts, the names of their essential parts, and a description of the required equipment;

(ii) The clearing away, swinging out, and lowering of lifeboats and liferafts, the handling of lifeboats under oars and sails, including questions relative to the proper handling of a boat in a heavy sea; and

(iii) The operation and functions of commonly used types of davits.

(6) An applicant, to be eligible for an endorsement as lifeboatman, must be able to speak and understand the English language as would be required in the rating of lifeboatman and in an emergency aboard ship.

§ 12.409 General requirements for lifeboatman-limited endorsements.

(a) *General.* Every person serving onboard vessels fitted with liferafts, but not fitted with lifeboats, must hold an MMC or MMD endorsed as lifeboatman or as lifeboatman-limited. No endorsement as lifeboatman or lifeboatman-limited is required of any person employed on any unrigged vessel, except on a seagoing barge and on a tank barge navigating waters other than rivers and/or canals.

(b) *Requirements for Certification.* (1) To qualify for an endorsement as lifeboatman-limited, an applicant must:

(i) Be at least 18 years of age;

(ii) Pass the prescribed physical and medical examination requirements specified in 46 CFR, part 10, subpart C; and

(iii) Present evidence of having passed a chemical test for dangerous drugs or qualifying for an exemption for testing described in § 16.220 of this subchapter.

(2) An applicant to be eligible for an endorsement as lifeboatman-limited must meet one of the following sea service requirements:

(i) At least 12 months of sea service in any department of vessels on ocean, coastwise, inland, and Great Lakes; or

(ii) At least 6 months of sea service in any department of vessels and successful completion of an approved course.

(3) Before an applicant is issued an endorsement as a lifeboatman, he or she must prove to the satisfaction of the Coast Guard by oral or other means of examination, and by actual practical demonstration of abilities, his or her knowledge of seamanship and the ability to carry out effectively all the duties that may be required of a lifeboatman-limited.

(4) The practical demonstration must consist of a demonstration of the applicant's ability to:

(i) Take charge of a rescue boat, liferaft, or other lifesaving apparatus during and after launch;

(ii) Operate a rescue boat engine;

(iii) Manage a survival craft and survivors after abandoning ship;

(iv) Safely recover rescue boats; and

(v) Use locating and communication devices.

(5) The examination, whether administered orally or by other means, must be conducted only in the English language and must consist of questions regarding:

(i) Liferafts, rescue boats, and other survival craft except lifeboats, the names of their essential parts, and a description and use of the required equipment;

(ii) The clearing away, launching, and handling of rescue craft except lifeboats; and

(iii) The operation and functions of commonly used launching devices for rescue boats and survival craft other than lifeboats.

(6) An applicant, to be eligible for an endorsement as lifeboatman-limited, must be able to speak and understand the English language as would be required in the rating of lifeboatman-limited and in an emergency aboard ship.

Subpart E—Requirements for Domestic Engineer Rating Endorsements

§ 12.501 General requirements for a qualified member of the engine department (QMED).

(a) *General.* A qualified member of the engine department (QMED) is any person below officer and above the rating of coal passer or wiper who holds an MMC or MMD endorsed as QMED by the Coast Guard.

(b) *Categories.* (1) Each QMED rating must be endorsed separately, unless the applicant qualifies for all QMED ratings, in which case the endorsement will read ''QMED—any rating.'' The ratings are:

(i) Watertender/Fireman;

(ii) Oiler;

(iii) Junior engineer;

(iv) Electrician/Refrigerating engineer; and

(v) Pumpman/Machinist.

(2) The Coast Guard will no longer issue new endorsements for deck engineer, deck/engine mechanic, or engineman, as well as individual endorsements for refrigerating engineer, machinist, electrician, and pumpman. However, a mariner who holds any of these endorsements may continue to renew it as long as he or she is otherwise qualified.

(3) If the holder of an endorsement as:

(i) Pumpman only or machinist only, seeks the combined endorsement of pumpman/machinist, the mariner must pass the examination described in Table 12.505(c) of this subpart.

(ii) Electrician only or refrigerating engineer only, seeks the combined endorsement of electrician/refrigerating engineer, the mariner must pass the examination described in Table 12.505(c) of this subpart.

(c) *Requirements for certification.* To qualify for any endorsement as QMED, an applicant must:

(1) Be at least 18 years of age;

(2) Pass the prescribed physical and medical examination requirements specified in 46 CFR, part 10, subpart C;

(3) Present evidence of having passed a chemical test for dangerous drugs or of qualifying for an exemption from testing described in § 16.220 of this subchapter;

(4) Meet the sea service or training requirements in § 12.503 of this subpart;

(5) Pass an examination as QMED; and

(6) Speak and understand the English language as would be required in performing the general duties of QMED and during an emergency aboard ship.

§ 12.503 Service or training requirements.

(a) An applicant for an endorsement as QMED must furnish the Coast Guard proof of qualification based on 6 months of service in a rating at least equal to that of wiper or coal passer.

(b) Approved training programs may be substituted for the required periods of service as follows:

(1) A graduate of a school ship may qualify for a rating endorsement as QMED, without further service, upon satisfactory completion of the course of instruction. For this purpose, school ship is interpreted to mean an institution that offers a complete approved course of instruction, including a period of at-sea training, in the skills appropriate to the rating of QMED.

(2) Training programs, other than those classified as a school ship, may be substituted for up to one-half of the required service. The service/training ratio for each program is determined by the Coast Guard.

§ 12.505 Examination requirements.

(a) Before an applicant is issued an endorsement as QMED in the rating of oiler, watertender/fireman, junior engineer, pumpman/machinist, or electrician/refrigerating engineer, he or she must prove to the satisfaction of the Coast Guard, by oral or other means of examination, his or her knowledge of the subjects listed in paragraph (c) of this section.

(b) The examination, whether administered orally or by other means, must be conducted only in the English language.

(c) List of subjects required:

TABLE 12.505(c)—EXAMINATION SUBJECTS FOR QMED RATINGS

Subjects	Pumpman/ machinist	Fireman/ watertender	Oiler	Electrician/ refrigerating engineer	Junior engineer
General subjects:					
Auxiliary machinery	X	X	X	X	X
Basic safety procedures	X	X	X	X	X
Bearings	X		X	X	X
Care of equipment and machine parts	X	X	X	X	X
Deck machinery	X			X	X
Drawings and tables	X			X	X
Heat exchangers	X	X	X	X	X
Hydraulic principles	X			X	X
Instrumentation principles	X	X	X	X	X
Lubrication principles	X		X	X	X
Maintenance procedures	X	X	X	X	X
Measuring instruments	X	X	X	X	X
Pipes, fittings, and valves	X	X	X	X	X
Pollution prevention	X	X	X	X	X
Properties of fuel		X	X		X
Pumps, fans, and blowers	X			X	X
Refrigeration principles			X	X	X
Remote control equipment	X	X	X	X	X
Use of hand/power tools	X	X	X	X	X
Watch duties		X	X		X
Electrical subjects:					
A/C circuits				X	X
Batteries				X	X
Calculations				X	X
Communication devices				X	X
D/C circuits				X	X
Distribution systems				X	X
Electronic principles				X	X
Generation equipment			X	X	X
Maintenance			X	X	X
Measuring devices				X	X
Motor controllers				X	X
Motors			X	X	X
Safety	X	X	X	X	X
Troubleshooting				X	
Safety and environmental protection subjects:					
Communications	X	X	X	X	X

TABLE 12.505(c)—EXAMINATION SUBJECTS FOR QMED RATINGS—Continued

Subjects	Pumpman/ machinist	Fireman/ watertender	Oiler	Electrician/ refrigerating engineer	Junior engineer
Damage control	X	X	X	X	X
Elementary first aid	X	X	X	X	X
Emergency equipment	X	X	X	X	X
Environmental awareness	X	X	X	X	X
Fire prevention	X	X	X	X	X
Firefighting equipment	X	X	X	X	X
Firefighting principles	X	X	X	X	X
General safety	X	X	X	X	X
Hazardous materials	X	X	X	X	X
Shipboard equipment and systems subjects:					
Air conditioning				X	X
Ballast	X	X	X		X
Bilge	X	X	X		X
Compressed air	X	X	X	X	X
Desalination			X		X
Fuel oil storage/transfer		X	X		X
Fuel treatment		X	X		X
Heating/ventilation	X			X	X
Lubrication	X		X	X	X
Potable water			X		X
Refrigeration			X	X	X
Sanitary/sewage			X		X
Steering			X	X	X
Steam propulsion subjects:					
Auxiliary turbines		X	X		X
Boiler fundamentals		X	X		X
Combustion principles		X	X		X
Condensate systems		X	X		X
Drive systems		X	X		X
Feedwater systems		X	X		X
Fuel service systems		X	X		X
Maintenance	X	X	X		X
Safety	X	X	X	X	X
Steam fundamentals	X	X	X		X
Turbine fundamentals		X	X		X
Motor propulsion subjects:					
Air-charge systems			X		X
Cooling water systems			X		X
Diesel engine principles	X		X		X
Drive systems	X		X		X
Fuel service systems			X		X
Intake/exhaust			X		X
Lubrication systems	X		X		X
Starting systems			X		X
Waste heat/auxiliary boiler			X		X

Subpart F—Requirements for STCW Rating Endorsements

§ 12.601 General requirements for STCW rating endorsements.

(a) *General.* The Coast Guard will issue this endorsement to qualified applicants for any of the following ratings or qualifications:

(i) Able seafarer-deck;

(ii) Ratings forming part of a navigational watch (RFPNW);

(iii) Able seafarer-engine;

(iv) Ratings forming part of a watch in a manned engineroom or designated to perform duties in a periodically unmanned engine room (RFPEW);

(v) Electro-technical rating on vessels powered by main propulsion machinery of 750 kW/1,000 HP or more;

(vi) Proficiency in survival craft and rescue boats, other than fast rescue boats (PSC);

(vii) Proficiency in survival craft and rescue boats, other than lifeboats and fast rescue boats (PSC-limited);

(viii) Proficiency in fast rescue boats;

(ix) Medical first-aid provider;

(x) Person-in-charge of medical care;

(xi) GMDSS at-sea maintainer;

(xii) Vessel personnel with designated security duties; or

(xiii) Security awareness.

(b) *Standard of competence.* (1) The Coast Guard will accept one or more methods to demonstrate meeting the standard of competence in this subpart. The Coast Guard will accept the following as evidence for each one of the methods required in Column 3—Methods for demonstrating competence—of the Tables of Competence in the STCW Code (incorporated by reference, see § 12.103 of this part):

(i) *In-service experience:* documentation of successful completion of assessments, approved or accepted by the Coast Guard, and signed by a seafarer with a higher credential, deck or engineering, as appropriate, than the assessment related to the credential sought by the applicant.

(ii) *Training ship experience:* documentation of successful completion of an approved training program involving formal training and assessment onboard a training ship.

(iii) *Simulator training:* documentation of successful completion

of training and assessment from a Coast Guard-approved course involving maritime simulation.

(iv) *Laboratory equipment training:* documentation of successful completion of training and assessments from an approved training course or completion certificate from an approved training school or facility.

(v) *Practical training or instruction:*

(A) Documentation of successful completion of assessment as part of structured/formal training or instruction provided by an organization or company as part of an accepted safety or quality management system; or

(B) Documentation of successful completion of an approved training course from a school or facility.

(vi) *Specialist training:* documentation of successful completion of assessment as part of a company training or specialized training provided by a maritime or equipment specialist.

(vii) *Workshop skills training:* documentation of successful completion of assessments or completion certificate from an approved training program, school or facility.

(viii) *Training program:* documentation of successful completion of an approved training program.

(ix) *Practical demonstration and practical demonstration of competence:* documentation of successful completion of assessments approved or accepted by the Coast Guard.

(x) *Practical test and practical experience:* documentation of successful completion of assessments approved or accepted by the Coast Guard.

(xi) *Examination:* Successful completion of a Coast Guard examination.

(xii) *Instruction or course:* documentation of successful completion of a course of instruction offered by an approved training school or facility.

(2) Knowledge components may be documented by:

(i) Successful completion of the Coast Guard examination for the associated rating endorsement;

(ii) Successful completion of an approved course; or

(iii) Successful completion of an approved program.

(3) The Coast Guard will publish assessment guidelines that should be used to document assessments that demonstrate meeting the standard of competence, as required by paragraph (b)(1) of this section. Organizations may develop alternative assessment documentation for demonstrations of competence; however, it must be approved by the Coast Guard prior to their use and submittal with an application.

(c) *Basic Safety Training (BST).* (1) Applicants seeking an STCW rating endorsement must provide evidence, with their application, of meeting the standard of competence for basic safety training as described below:

(i) Personal survival techniques as set out in Table A–VI/1–1 of the STCW Code;

(ii) Fire prevention and firefighting as set out in Table A–VI/1–2 of the STCW Code;

(iii) Elementary first aid as set out in Table A–VI/1–3 of the STCW Code; and

(iv) Personal safety and social responsibilities as set out in Table A–VI/1–4 of the STCW Code.

(2) Seafarers qualified in accordance with paragraph (c) of this section must provide evidence of maintaining the standard of competence every 5 years for the following elements of BST:

(i) Personal survival techniques as set out in Table A–VI/1–1 of the STCW Code.

(ii) Fire prevention and firefighting as set out in Table A–VI/1–2 of the STCW Code.

(3) The Coast Guard will accept onboard training and experience, through evidence of 1 year of sea service within the last 5 years, as meeting the requirements for BST of paragraph (c)(2) of this section for the following areas:

(i) Personal survival techniques as set out in Table A–VI/1–1 of the STCW Code:

(A) Don a lifejacket;

(B) Board a survival craft from the ship, while wearing a lifejacket;

(C) Take initial actions on boarding a lifeboat to enhance chance of survival;

(D) Stream a lifeboat drogue or sea-anchor;

(E) Operate survival craft equipment; and

(F) Operate location devices, including radio equipment.

(ii) Fire prevention and firefighting as set out in Table A–VI/1–2 of the STCW Code:

(A) Use self-contained breathing apparatus; and

(B) Effect a rescue in a smoke-filled space, using an approved smoke-generating device aboard, while wearing a breathing apparatus.

(4) The Coast Guard will only accept evidence of approved assessments conducted ashore as meeting the requirements for BST of paragraph (c)(2) of this section for the following areas:

(i) Personal survival techniques as set out in Table A–VI/1–1 of the STCW Code:

(A) Don and use an immersion suit;

(B) Safely jump from a height into the water;

(C) Right an inverted liferaft while wearing a lifejacket;

(D) Swim while wearing a lifejacket; and

(E) Keep afloat without a lifejacket.

(ii) Fire prevention and firefighting as set out in Table A–VI/1–2 of the STCW Code:

(A) Use various types of portable fire extinguishers;

(B) Extinguish smaller fires, e.g., electrical fires, oil fires, and propane fires;

(C) Extinguish extensive fires with water, using jet and spray nozzles;

(D) Extinguish fires with foam, powder, or any other suitable chemical agent;

(E) Fight fire in smoke-filled enclosed spaces wearing self-contained breathing apparatus;

(F) Extinguish fire with water fog or any other suitable firefighting agent in an accommodation room or simulated engineroom with fire and heavy smoke; and

(G) Extinguish oil fire with fog applicator and spray nozzles, dry chemical powder, or foam applicators.

(5) Applicants who cannot meet the 1 year of sea service within the last 5 years, as described in paragraph (c)(1) of this section, will be required to meet the requirements of paragraph (b)(1) of this section.

(d) *Grandfathering.* (1) Except as noted otherwise, each candidate who applies for a credential based on approved or accepted training or approved seagoing service that was started on or after July 1, 2013, or who applies for the MMC endorsement on or after January 1, 2017, must meet the requirements of these regulations.

(2) Except as noted by this subpart, seafarers holding an STCW endorsement prior to July 1, 2013 will not be required to complete any additional training required under this part to retain the STCW endorsements.

(3) Except as noted otherwise, candidates who commence Coast Guard-approved or -accepted training or approved seagoing service before July 1, 2013 will be required to comply with the requirements of this part existing before the publication of these regulations [EFFECTIVE DATE OF THE RULE]. This includes the assessments published prior to the date of publication of these regulations [EFFECTIVE DATE OF THE RULE], as well as the additional requirements for the STCW endorsement section.

(4) Except as noted by this subpart, the Coast Guard will continue to issue STCW endorsements meeting the requirements of this part existing before the publication of these regulations [EFFECTIVE DATE OF THE RULE], for

seafarers identified in paragraph (d)(3) of this section, until January 1, 2017.

§ 12.603 Requirements to qualify for an STCW endorsement as able seafarer-deck.

(a) To qualify for this endorsement as able seafarer-deck, an applicant must:

(1) Be not less than 18 years of age;

(2) Meet the requirements for certification as a RFPNW;

(3) While qualified as an RFPNW, have seagoing service in the deck department of:

(i) Not less than 18 months; or

(ii) Not less than 12 months and have completed approved training;

(4) Provide evidence of meeting the standard of competence specified in Table A–II/5 of the STCW Code (incorporated by reference, see § 12.103 of this part); and

(5) Provide evidence of having satisfactorily completed approved training in:

(i) Proficiency in survival craft and rescue boats other than fast rescue boats (PSC); or

(ii) Proficiency in survival craft and rescue boats, other than lifeboats or fast rescue boats-limited (PSC-limited), as appropriate.

(b) Until January 1, 2017, seafarers may be considered to have met the requirements of this section if they have served as a watchstanding A/B, or as an RFPNW for a period of not less than 12 months within the 60 months prior to application.

(c) Seafarers holding a rating endorsement as able seaman, before January 1, 2017, will be eligible for this endorsement upon showing evidence of:

(1) Holding an endorsement as an RFPNW; and

(2) Proficiency in survival craft and rescue boats, other than fast rescue boats (PSC).

(d) The Coast Guard may exempt an applicant from meeting any individual knowledge, understanding, and proficiency required in Section A–II/5 of the STCW Code. These exemptions must be approved by the Coast Guard based upon vessel type. Under these circumstances, the certificate may include a corresponding limitation.

(e) Seafarers with the following domestic rating endorsements will be eligible for this endorsement upon completion of the requirements designated in this section:

TABLE 12.603(e)—STCW ENDORSEMENT AS ABLE SEAFARER-DECK

Entry path from domestic endorsements	Sea service under authority of the endorsement *	Competence—STCW table A–II/4 **	Competence—STCW table A–II/5 ***	Training required by this section ****
A/B Unlimited, any waters		Y	Y	N
A/B Limited		Y	Y	N
A/B Special	6 months	Y	Y	N
A/B–Offshore supply vessels	12 months [1]	Y	Y	N
A/B Sail	12 months [1]	Y	Y	N
A/B–Fishing Industry	12 months [1]	Y	Y	N

* This column provides the minimum additional service required of the seafarer in order to meet the requirements of this section.
** Complete any items in paragraph (a)(2) of this section not previously satisfied.
*** Complete any items in paragraph (a)(4) of this section not previously satisfied.
**** Complete any items in paragraph (a)(5) of this section not previously satisfied.
[1] The service may be reduced to 6 months if training has been completed as part of an approved training program meeting the requirements of (a)(3)(ii) of this section.

§ 12.605 Requirements to qualify for an STCW endorsement as ratings forming part of a navigational watch (RFPNW).

(a) To qualify for this endorsement as an RFPNW on a seagoing vessel of 200 GRT/500 GT or more, an applicant must:

(1) Be not less than 16 years of age;

(2) Provide evidence of service as follows:

(i) Six months of seagoing service, which includes training and experience associated with navigational watchkeeping functions, and involves the performance of duties carried out under the supervision of the master, mate, or qualified STCW deck rating; or

(ii) Proof of successful completion of Coast Guard-approved or -accepted training, which includes not less than 2 months of approved seagoing service; and

(3) The applicant must provide evidence of meeting standards of competence prescribed in Table A–II/4 of the STCW Code (incorporated by reference, see § 12.103 of this part).

(b) The Coast Guard may exempt an applicant from meeting any individual knowledge, understanding, and proficiency required in Section A–II/4 of the STCW Code. These exemptions must be approved by the Coast Guard based upon vessel type. Under these circumstances, the certificate may include a corresponding limitation.

(c) Seafarers with the following domestic rating endorsements will be eligible for this endorsement upon completion of requirements designated in this section:

TABLE 12.605(c)—STCW ENDORSEMENT AS RFPNW

Entry path from domestic endorsements	Sea service under authority of the endorsement *	Competence—STCW table A–II/4 **
A/B Unlimited, any waters		Y
A/B Limited.		
A/B Special		Y
A/B–Offshore supply vessels		Y
A/B Sail.		
A/B–Fishing Industry		Y
Ordinary seaman	6 mo.	Y

* This column provides the minimum additional service required of the seafarer in order to meet the requirements of this section.
** Complete any items in paragraph (a)(3) of this section not previously satisfied.

§ 12.607 Requirements to qualify for an STCW endorsement as rating as able seafarer-engine.

(a) To qualify for an STCW endorsement as an able seafarer-engine, an applicant must:

(1) Be not less than 18 years of age;

(2) Meet the requirements for certification as a ratings forming part of an engineering watch (RFPEW);

(3) While qualified as an RFNEW, have seagoing service in the engine department of:

(i) Not less than 12 months; or

(ii) Not less than 6 months and have completed approved training; and

(4) Provide evidence of meeting the standard of competence specified in Table A–III/5 of the STCW Code (incorporated by reference, see § 12.103 of this part).

(b) Until January 1, 2017, seafarers may be considered to have met the requirements of this section if they have served as a watchstanding QMED in the engine department, or an RFPEW for a period of not less than 12 months within the last 60 months prior to application.

(c) Seafarers holding a rating endorsement as Qualified Member of the Engine Department (QMED) before January 1, 2017 will be eligible for this endorsement upon showing evidence of holding an endorsement as an RFPEW.

(d) The Coast Guard may exempt an applicant from meeting any individual knowledge, understanding, and proficiency required in Section A–III/5 of the STCW Code. These exemptions must be approved by the Coast Guard based upon vessel type. Under these circumstances, the certificate may include a corresponding limitation.

(e) Seafarers with the following domestic rating endorsements will be eligible for this endorsement upon completion of requirements designated in this section:

TABLE 12.607(e)—STCW ENDORSEMENT AS ABLE SEAFARER-ENGINE

Entry path from domestic endorsements	Sea service under authority of the endorsement *	Competence—STCW table A–III/5 **
Oiler		Y
Fireman/watertender		Y
Junior engineer		Y

* This column provides the minimum additional service required of the seafarer in order to meet the requirements of this section.
** Complete any items in paragraph (a)(4) of this section not previously satisfied.

§ 12.609 Requirements to qualify for an STCW endorsement as Rating Forming Part of an Engineering Watch (RFPEW).

(a) To qualify for an STCW endorsement as an RFPEW in a manned engineroom or designated to perform duties in a periodically unmanned engineroom, an applicant must:

(1) Be not less than 16 years of age;

(2) Provide evidence of service as follows:

(i) Six months of seagoing service, which includes training and experience associated with engineroom functions, and involves the performance of duties carried out under the supervision of an engineer officer or a qualified STCW rating; or

(ii) Proof of successful completion of a Coast Guard-approved or -accepted training, which includes not less than 2 months approved seagoing service; and

(3) Provide evidence of meeting the standard of competence as specified in Table A–III/4 of the STCW Code (incorporated by reference, see § 12.103 of this part).

(b) The Coast Guard may exempt an applicant from meeting any individual knowledge, understanding, and proficiency required in Section A–III/4 of the STCW Code. These exemptions must be approved by the Coast Guard based upon vessel type. Under these circumstances, the certificate may include a corresponding limitation.

(c) Seafarers with the following domestic rating endorsements will be eligible for this endorsement upon completion of requirements designated in this section:

TABLE 12.609(c)—STCW ENDORSEMENT AS RFPEW

Entry path from domestic endorsements	Sea service under authority of the endorsement *	Competence—STCW table A–III/4 **
Any QMED		Y
Wiper	6 months	Y

* This column provides the minimum additional service required of the seafarer in order to meet the requirements of this section.
** Complete any items in paragraph (a)(3) of this section not previously satisfied.

§ 12.611 Requirements to qualify for an STCW endorsement as electro-technical rating on vessels powered by main propulsion machinery of 750 kW/1,000 HP or more.

(a) To qualify for an STCW endorsement as an electro-technical rating, an applicant must:

(1) Be not less than 18 years of age;

(2) Provide evidence of:

(i) Twelve months of seagoing service that includes training and experience associated with engineroom watchkeeping functions and involves the performance of duties carried out under the supervision of an engineer officer, electro-technical officer, or a qualified STCW rating;

(ii) Proof of successful completion of a Coast Guard-approved or -accepted course, which includes not less than 6 months of approved seagoing service; or

(iii) Qualifications meeting the standard of competence specified in Table A–III/7 of the STCW Code (incorporated by reference, see § 12.103 of this part) and approved seagoing service of not less than 3 months; and

(3) Provide evidence of meeting the standard of competence specified in Table A–III/7 of the STCW Code.

(b) An applicant who holds an STCW endorsement as able seafarer-engine and

domestic rating endorsements as electrician, electrician/refrigerating engineer, or junior engineer issued on or after July 1, 2013, and who has served in a relevant capacity onboard a seagoing ship powered by main-propulsion machinery of 750 kW/1,000 HP for a period of not less than 12 months in the previous 60 months, will qualify for this endorsement without additional training, service, or assessment.

(c) An applicant who holds an STCW endorsement as able seafarer-engine and domestic rating endorsements as electrician, electrician/refrigerating engineer, or junior engineer issued before July 1, 2013, and who has completed the assessment and training described in paragraph (a)(3) of this section, will qualify for this endorsement without additional training, service, or assessment.

(d) Seafarers with the following domestic rating endorsement will be eligible for this endorsement upon completion of the requirements designated in this section:

TABLE 12.609(d)—STCW ENDORSEMENT AS RFPEW

Entry path from domestic endorsements	Sea service under authority of the endorsement *	Competence—STCW table A–III/4 **
Electrician/Refrigerating engineer		Y

* This column provides the minimum additional service required of the seafarer in order to meet the requirements of this section.
** Complete any items in paragraph (a)(3) of this section not previously satisfied.

§ 12.613 Requirements to qualify for an STCW endorsement in proficiency in survival craft and rescue boats other than fast rescue boats (PSC).

(a) To qualify for an STCW endorsement in proficiency in survival craft and rescue boats other than fast rescue boats (PSC), the applicant must:

(1) Be at least 18 years of age;

(2) Meet the requirements for a lifeboatman endorsement in § 12.407 of this part; and

(3) Complete BST, found in § 12.601(c) of this subpart.

(b) *Continued Professional Competence.* (1) Seafarers qualified in accordance with paragraph (a) of this section must provide evidence of maintaining the standard of competence as set out in Table A–VI/2–1 of the STCW Code (incorporated by reference, see § 12.103 of this part) every 5 years.

(2) The Coast Guard will accept onboard training and experience, through evidence of 1 year of sea service within the last 5 years, as meeting the requirements of paragraph (b)(1) of this section for the following areas as set out in Table A–VI/2–1 of the STCW Code:

(i) Take charge of a survival craft or rescue boat during and after launch:

(A) Interpret the markings on survival craft as to the number of persons they are intended to carry;

(B) Give correct commands for launching and boarding survival craft, clearing the ship, and handling and disembarking persons from survival craft;

(C) Prepare and safely launch survival craft and clear the ship's side quickly; and

(D) Safely recover survival craft and rescue boats.

(ii) Manage survivors and survival craft after abandoning ship:

(A) Row and steer a boat and steer by compass;

(B) Use individual items of equipment of survival crafts, except for pyrotechnics; and

(C) Rig devices to aid location.

(iii) Use locating devices, including communication and signaling apparatus:

(A) Use of portable radio equipment for survival craft.

(iv) Apply first aid to survivors.

(3) The Coast Guard will only accept evidence of assessments conducted from ashore as meeting the requirements of paragraph (b)(1) of this section for the areas not included in paragraph (b)(2) of this section as set out in Table A–VI/2–1 of the STCW Code.

(c) Seafarers holding an MMD or MMC endorsement as lifeboatman before January 1, 2017 will be eligible for this endorsement upon showing evidence of sea service of not less than 12 months within the last 60 months. The sea service must be completed prior to January 1, 2017.

§ 12.615 Requirements to qualify for an STCW endorsement in proficiency in survival craft and rescue boats other than lifeboats and fast rescue boats—limited (PSC—limited).

(a) To qualify for an STCW endorsement in proficiency in survival craft and rescue boats other than lifeboats and fast rescue boats—limited (PSC—limited)—the applicant must:

(1) Be at least 18 years of age;

(2) Meet the requirements for a lifeboatman-limited endorsement in § 12.409 of this part; and

(3) Complete BST, found in § 12.601(c) of this subpart.

(b) *Continued Professional Competence.* (1) Seafarers qualified in accordance with paragraph (a) of this section must provide evidence of maintaining the standard of competence as set out in Table A–VI/2–1 of the STCW Code (incorporated by reference, see § 12.103 of this part) every 5 years.

(2) The Coast Guard will accept onboard training and experience, through evidence of 1 year of sea service within the last 5 years, as meeting the requirements of paragraph (b)(1) of this section for the following areas as set out in Table A–VI/2–1 of the STCW Code:

(i) Take charge of a survival craft or rescue boat during and after launch:

(A) Interpret the markings on survival craft as to the number of persons they are intended to carry;

(B) Give correct commands for launching and boarding rescue boats and survival craft other than lifeboats, clearing the ship, and handling and disembarking persons from survival craft;

(C) Prepare and safely launch rescue boats and survival craft other than lifeboats and clear the ship's side quickly; and

(D) Safely recover rescue boats.

(ii) Manage survivors and survival craft after abandoning ship:

(A) Steer a rescue boat and steer by compass;

(B) Use individual items of equipment of survival crafts other than lifeboats, except for pyrotechnics; and

(C) Rig devices to aid location.

(iii) Use locating devices, including communication and signaling apparatus:

(A) Use of portable radio equipment for rescue boats and survival craft.

(iv) Apply first aid to survivors.

(2) The Coast Guard will only accept evidence of assessments conducted from ashore as meeting the requirements of paragraph (b)(1) of this section for the areas not included in paragraph (b)(2) of this section as set out in Table A–VI/2–1 of the STCW Code.

§ 12.617 Requirements to qualify for an STCW endorsement in proficiency in fast rescue boats.

(a) To qualify for an STCW endorsement in proficiency in fast rescue boats, an applicant must:

(1) Be not less than 18 years of age;

(2) Hold an endorsement in proficiency in survival craft and rescue boats other than fast rescue boats (PSC) or in proficiency in survival craft and rescue boats other than lifeboats and fast rescue boats—limited (PSC—limited)—under this subpart;

(3) Provide evidence of successful completion of a Coast Guard-approved or -accepted course; and

(4) Provide evidence of meeting the standard of competence specified in Table A–VI/2 of the STCW Code (incorporated by reference, see § 12.103 of this part).

(b) *Continued Professional Competence.* (1) Seafarers qualified in accordance with paragraph (a) of this section must provide evidence of maintaining the standard of competence as set out in Table A–VI/2–2 of the STCW Code every 5 years.

(2) The Coast Guard will accept onboard training and experience, through evidence of 1 year of sea service within the last 5 years, as meeting the requirements of paragraph (b)(1) of this section for the following areas as set out in Table A–VI/2–2 of the STCW Code:

(i) Take charge of a fast rescue boat during and after launch:

(A) Control safe launching and recovery of a fast rescue boat;

(B) Handle a fast rescue boat in prevailing weather and sea conditions;

(C) Use communication and signaling equipment between the fast rescue boat and a helicopter and a ship;

(D) Use the emergency equipment carried; and

(E) Carry out search patterns, taking account of environmental factors.

(3) The Coast Guard will only accept evidence of assessments conducted ashore as meeting the requirements of paragraph (b)(1) of this section for the areas not included in paragraph (b)(2) of this section as set out in Table A–VI/2–2 of the STCW Code.

§ 12.619 Requirements to qualify for an STCW endorsement as medical first-aid provider.

(a) To qualify for an STCW endorsement as medical first-aid provider, an applicant must:

(1) Provide evidence of successful completion of an approved course in medical first aid; and

(2) Provide evidence of meeting the standard of competence specified in Table A–VI/4–1 of the STCW Code (incorporated by reference, see § 12.103 of this part).

(b) An applicant holding any of the following credentials is qualified for an endorsement as medical first-aid provider:

(1) A valid professional license listed in § 11.807(a)(5) or (a)(6) of this subchapter, without restriction or limitation placed upon it by the issuing State; or

(2) A rating listed in § 11.807(a)(7) or (a)(8) of this subchapter.

§ 12.621 Requirements to qualify for an STCW endorsement as person in charge of medical care.

(a) To qualify for an STCW endorsement as person in charge of medical care, an applicant must:

(1) Provide evidence of successful completion of an approved course in medical care; and

(2) Provide evidence of meeting the standard of competence specified in Table A–VI/4–2 of the STCW Code (incorporated by reference, see § 12.103 of this part).

(b) An applicant holding any of the following credentials is qualified for an endorsement as person-in-charge of medical care:

(1) A valid professional license listed in § 11.807(a)(5) or (a)(6) of this subchapter, without restriction or limitation placed upon it by the issuing State; or

(2) A rating listed in § 11.807(a)(7) or (a)(8) of this subchapter.

§ 12.623 Requirements to qualify for an STCW endorsement as Global Maritime Distress and Safety System (GMDSS) at-sea maintainer.

(a) To qualify for an STCW endorsement as GMDSS at-sea maintainer, an applicant must:

(1) Be not less than 18 years of age;

(2) Provide evidence of:

(i) Successful completion of a training program that covers at least the scope and content of the training outlined in Section B–IV/2 of the STCW Code (incorporated by reference, see § 12.103 of this part); or

(ii) Passing an approved GMDSS at-sea maintainer course; and

(3) Hold a valid Federal Communications Commission (FCC) certificate as GMDSS at-sea maintainer.

§ 12.625 Requirements to qualify for an STCW endorsement as vessel personnel with designated security duties.

(a) An applicant for an STCW endorsement as vessel personnel with designated security duties must:

(1) Present satisfactory documentary evidence of meeting the requirements in 33 CFR 104.220;

(2) Meet the physical examination requirements in 46 CFR, part 10, subpart C; and

(3) Meet the safety and suitability requirements and the National Driver Registry review requirements in § 10.209(e) of this subchapter, unless they have met these requirements within the previous 5 years in connection with another endorsement.

§ 12.627 Requirements to qualify for an STCW endorsement for security awareness.

(a) An applicant for an endorsement for security awareness must:

(1) Present satisfactory documentary evidence of meeting the requirements in 33 CFR 104.225;

(2) Meet the physical examination requirements in 46 CFR, part 10, subpart C; and

(3) Meet the safety and suitability requirements and the National Driver Registry review requirements in § 10.209(e) of this subchapter, unless they have met these requirements within the previous 5 years in connection with another endorsement.

Subpart G—Entry-level Domestic Ratings and Miscellaneous Ratings

§ 12.701 Credentials required for entry-level and miscellaneous ratings.

Every person employed in a rating other than able seaman (A/B) or QMED aboard U.S. flag vessels requiring such persons, must produce an MMC or MMD with the appropriate endorsement to the master or person in charge (PIC), if appropriate, before signing shipping articles.

§ 12.703 General requirements for entry-level ratings.

(a) Rating endorsements will be issued without professional examination to applicants in capacities other than able seaman, lifeboatman, lifeboatman-limited, tankerman, or QMED, including:

(1) Ordinary seaman;

(2) Wiper;

(3) Steward's department; and

(4) Steward's department (F.H.).

(b) Holders of MMCs or MMDs endorsed as ordinary seaman may serve in any unqualified rating in the deck or steward's department except as a food handler.

(c) Holders of MMCs or MMDs endorsed as wiper may serve in any unqualified rating in the engine or steward's department except as a food handler.

(d) Only MMCs or MMDs endorsed as steward's department (F.H.) will authorize the holder's service in any capacity in the steward's department, including food handler.

§ 12.705 Endorsements for persons enrolled in a Maritime Administration approved training program.

MMCs issued to individuals obtaining sea service as part of an approved training curriculum while enrolled at either the United States Merchant Marine Academy or a deck or engineering class of a Maritime Academy approved by and conducted under the rules prescribed by the Maritime Administrator and listed in part 310 of this title will include an endorsement of cadet (deck) or cadet (engine), as appropriate, and lifeboatman. Individuals obtaining sea service as part of such an approved training curriculum must do so in the capacity of cadet (deck) or cadet (engine), as appropriate, notwithstanding any other rating endorsements the individual may hold or any other capacity in which the individual may have previously served.

§ 12.707 Student observers.

Students in technical schools who are enrolled in courses in marine management, naval architecture, and ship operations, and who present a letter or other documentary evidence that they are enrolled, will be issued an MMC endorsed as ''student observer—any department'' and may be signed on ships as such. Students holding these endorsements will not take the place of any of the crew, or replace any of the regular required crew.

§ 12.709 Apprentice engineers.

(a) Persons enrolled in an apprentice engineer training program approved by the Coast Guard, and who present a letter or other documentary evidence that they are enrolled, may be issued an MMC endorsed as apprentice engineer and may be signed on ships as such. The endorsement as apprentice engineer may be in addition to other endorsements; however, this endorsement does not authorize the holder to replace any of the regular required crew.

(b) Persons holding the endorsement as apprentice engineer are deemed to be seamen.

§ 12.711 Apprentice mate.

(a) A person enrolled in an apprentice mate training program approved by the Coast Guard, and who presents a letter or other documentary evidence that he or she is enrolled, may be issued an MMC rating endorsement as apprentice mate and may be signed on a vessel in this capacity. The rating endorsement as apprentice mate may be in addition to other endorsements; however, this endorsement does not authorize the holder to replace any of the regular required crew.

(b) Persons holding the endorsement as apprentice mate are deemed to be seamen.

Subpart H—Non-resident Alien Members of the Steward's Department on U.S. Flag Large Passenger Vessels

§ 12.801 Purpose.

The rules in this subpart implement 46 U.S.C. 8103(k) by establishing requirements for the issuance of MMCs, valid only for service in the steward's department of U.S. flag large passenger vessels, to non-resident aliens.

§ 12.803 General requirements.

(a) Unless otherwise specified in this subpart, non-resident alien applicants for Coast Guard-issued MMCs are subject to all applicable requirements contained in this subchapter.

(b) No application for an MMC from a non-resident alien issued pursuant to this subpart will be accepted unless the applicant's employer satisfies all of the requirements of § 12.805 of this subpart.

§ 12.805 Employer requirements.

(a) The employer must submit the following to the Coast Guard, as a part of the applicant's MMC application, on behalf of the applicant:

(1) A signed report that contains all material disciplinary actions related to the applicant, such as, but not limited to, violence or assault, theft, drug and alcohol policy violations, and sexual harassment, along with an explanation of the criteria used by the employer to determine the materiality of those actions;

(2) A signed report regarding an employer-conducted background check. The report must contain:

(i) A statement that the applicant has successfully undergone an employer-conducted background check;

(ii) A description of the employer-conducted background check, including all databases and records searched. The background check must, at a minimum, show that the employer has reviewed all information reasonably and legally available to the owner or managing operator, including the review of available court and police records in the applicant's country of citizenship, and any other country in which the applicant has received employment referrals, or resided, for the past 20 years prior to the date of application; and

(iii) All information derived from the employer-conducted background check; and

(3) An employer-conducted background check, which must be conducted to the satisfaction of the Coast Guard for an MMC to be issued to the applicant.

(b) If an MMC is issued to the applicant, the report and information required in paragraph (a)(2) of this section must be securely kept by the employer on the U.S. flag large passenger vessel, or U.S. flag large passenger vessels, on which the applicant is employed. The report and information must remain on the last U.S. flag large passenger vessel on which the applicant was employed until such time as the MMC is returned to the Coast Guard in accordance with paragraph (d) of this section.

(c) If an MMC or a transportation worker identification credential (TWIC) is issued to the applicant, each MMC and TWIC must be securely kept by the employer on the U.S. flag large passenger vessel on which the applicant is employed. The employer must maintain a detailed record of the seaman's total service on all authorized U.S. flag large passenger vessels, and must make that information available to the Coast Guard upon request, to demonstrate that the limitations of § 12.811(c) of this subpart have not been exceeded.

(d) In the event that the seaman's MMC and/or TWIC expires, the seaman's visa status terminates, the seaman serves onboard the U.S. flag large passenger vessel(s) for 36 months in the aggregate as a nonimmigrant crewman, the employer terminates employment of the seaman, or, if the seaman otherwise ceases working with the employer, the employer must return the MMC to the Coast Guard and/or the TWIC to the Transportation Security Administration (TSA) within 10 days of the event.

(e) In addition to the initial material disciplinary actions report and the initial employer-conducted background check specified in paragraph (a) of this section, the employer must:

(1) Submit to the National Maritime Center an annual material disciplinary actions report to update whether there have been any material disciplinary actions related to the applicant since the last material disciplinary actions report was submitted to the Coast Guard. The annual material disciplinary actions report must:

(i) Be submitted to the satisfaction of the Coast Guard in accordance with the same criteria set forth in paragraph (a)(1) of this section, except that the period of time examined for the material disciplinary actions report need only extend back to the date of the last material disciplinary actions report; and

(ii) Be submitted to the Coast Guard on or before the anniversary of the issuance date of the MMC; and

(2) Conduct a background check each year that the MMC is valid to search for any changes that might have occurred since the last employer-conducted background check was performed. The annual background check must:

(i) Be conducted to the satisfaction of the Coast Guard in accordance with the same criteria set forth in paragraph (a)(2) of this section, except that the period of time examined during the annual background check need only extend back to the date of the last background check; and

(ii) Be submitted to the Coast Guard on or before the anniversary of the issuance date of the MMC.

(f) The employer is subject to the civil penalty provisions specified in 46 U.S.C. 8103(f) for any violation of this section.

§ 12.807 Basis for denial.

In addition to the requirements for an MMC established elsewhere in this subchapter, and the basis for denial established in §§ 10.209, 10.211, and 10.213 of this subchapter, an applicant for an MMC issued pursuant to this subpart must:

(a) Have been employed for a period of at least 1 year on a foreign flag passenger vessel that is under the same common ownership or control as the U.S. flag large passenger vessel, on which the applicant will be employed upon issuance of an MMC under this subpart;

(b) Have no record of material disciplinary actions during the employment required under paragraph (a) of this section, as verified in writing by the owner or managing operator of the U.S. flag large passenger vessel on which the applicant will be employed;

(c) Have successfully completed an employer-conducted background check to the satisfaction of both the employer and the Coast Guard; and

(d) Meet the citizenship and identity requirements of § 12.809 of this subpart.

§ 12.809 Citizenship and identity.

(a) Instead of the requirements of § 10.221 of this subchapter, a non-resident alien may apply for a Coast Guard-issued MMC, endorsed and valid only for service in the steward's department of a U.S. flag large passenger vessel, as defined in 46 U.S.C. 8103(k)(5)(B), if he or she is employable in the United States under the Immigration and Nationality Act (8 U.S.C. 1101, et seq.), including an alien crewman described in section 101(a)(15)(D)(i) of that Act.

(b) To meet the citizenship and identity requirements of this subpart, an applicant must present an unexpired passport issued by the government of the country of which the applicant is a citizen or subject; and either a valid U.S. C–1/D Crewman Visa or other valid U.S. visa or authority deemed acceptable by the Coast Guard.

(c) Any non-resident alien applying for an MMC under this subpart may not be a citizen of, or a temporary or permanent resident of, a country designated by the Department of State as a ''State Sponsor of Terrorism'' pursuant to section 6(j) of the Export Administration Act of 1979 (50 U.S.C. App. 2405(j)) or section 620A of the Foreign Assistance Act of 1961 (22 U.S.C. 2371).

§ 12.811 Restrictions.

(a) An MMC issued to a non-resident alien under this subpart authorizes service only in the steward's department of the U.S. flag large passenger vessel(s), that is/are under the same common ownership and control as the foreign flag passenger vessel(s), on which the non-resident alien served to meet the requirements of § 12.807(a) of this subpart:

(1) The MMC will be endorsed for service in the steward's department in accordance with § 12.703 of this part;

(2) The MMC may also be endorsed for service as a food handler if the applicant meets the requirements of § 12.703 of this part; and

(3) No other rating or endorsement is authorized, except lifeboatman or lifeboatman-limited, in which case all applicable requirements of this subchapter and the STCW Convention and STCW Code (incorporated by reference, see § 12.103 of this part) must be met.

(b) The following restrictions must be printed on the MMC, or be listed in an accompanying Coast Guard letter, or both:

(1) The name and official number of all U.S. flag vessels on which the non-resident alien may serve. Service is not authorized on any other U.S. flag vessel;

(2) Upon issuance, the MMC must remain in the custody of the employer at all times;

(3) Upon termination of employment, the MMC must be returned to the Coast Guard within 10 days in accordance with § 12.805 of this subpart;

(4) A non-resident alien issued an MMC under this subpart may not perform watchstanding, engineroom duty watch, or vessel navigation functions; and

(5) A non-resident alien issued an MMC under this subpart may perform emergency-related duties, provided:

(i) The emergency-related duties do not require any other rating or endorsement, except lifeboatman or lifeboatman-limited as specified in paragraph (a)(3) of this section;

(ii) The non-resident alien has completed familiarization and basic safety training (BST), as required in § 15.1105 of this subchapter;

(iii) That if the non-resident alien serves as a lifeboatman or lifeboatman-limited, he or she must have the necessary lifeboatman or lifeboatman-limited endorsement; and

(iv) The non-resident alien has completed the training for crewmembers on passenger ships performing duties involving safety or care for passengers, as required in § 15.1103 of this subchapter.

(c) A non-resident alien may only serve for an aggregate period of 36 months of actual service on all authorized U.S. flag large passenger vessels combined under the provisions of this subpart.

(d) Once this 36-month limitation is reached, the MMC becomes invalid and must be returned to the Coast Guard under § 12.805(d) of this subpart, and the non-resident alien is no longer authorized to serve in a position requiring an MMC on any U.S. flag large passenger vessel.

(e) An individual who successfully adjusts his or her immigration status to become either an alien lawfully admitted for permanent residence to the United States, or citizen of the United States, may apply for an MMC, subject to the requirements of § 10.221 of this subchapter, without any restrictions or limitations imposed by this subpart.

§ 12.813 Alternative means of compliance.

(a) The owner or managing operator of a U.S. flag large passenger vessel seeking to employ non-resident aliens issued MMCs under this subpart may submit a plan to the Coast Guard, which, if approved, will serve as an alternative means of complying with the requirements of this subpart.

(b) The plan must address all the elements contained in this subpart, as well as the related elements contained in § 15.530 of this subchapter, to the satisfaction of the Coast Guard.

Subpart I—Crewmembers on a Passenger Ship on an International Voyage

§ 12.901 Purpose of rules.

The rules in this subpart establish requirements for the qualification of

ratings serving on passenger ships as defined in § 12.903 of this part.

§ 12.903 Definitions.

Passenger ship in this subpart means a ship carrying more than 12 passengers when on an international voyage.

§ 12.905 General requirements.

(a) Any seafarer may serve on a passenger vessel on an international voyage and perform duties that involve safety or care for passengers, only after:

(1) Meeting the appropriate requirements of the STCW Regulation V/2 and of section A–V/2 of the STCW Code (incorporated by reference, see § 12.103 of this part); and

(2) Holding documentary evidence to show that the mariner meets these requirements through approved or accepted training.

(b) Seafarers who are required to be trained in accordance with paragraph (a)(1) of this section must, at intervals not exceeding 5 years, provide evidence of maintaining the standard of competence.

(c) The Coast Guard will accept onboard training and experience, through evidence of 1 year of sea service within the last 5 years, as meeting the requirements of paragraph (a)(2) of this section.

(d) Personnel serving onboard small passenger vessels engaged in domestic, near-coastal voyages, as defined in § 15.103 of this subchapter, are not subject to any further obligation for the purpose of this STCW requirement.

PART 13—CERTIFICATION OF TANKERMAN

32. The authority citation for part 13 continues to read as follows:

Authority: 44 U.S.C. 3507; 46 U.S.C. 3703, 7317, 8703, 9102; Department of Homeland Security Delegation No. 0170.1.

33. Revise § 13.101 to read as follows:

§ 13.101 Purpose.

This part describes the various tankerman endorsements issued by the Coast Guard on a merchant mariner credential (MMC).

(a) This part prescribes the requirements for the following endorsements:

(1) Tankerman-PIC;

(2) Tankerman-PIC (Barge);

(3) Tankerman-assistant; and

(4) Tankerman-engineer.

(b) This part prescribes the requirements for the following STCW endorsements:

(1) Advanced oil tanker cargo operation;

(2) Advanced chemical tanker cargo operation;

(3) Advanced liquefied gas tanker cargo operation;

(4) Basic oil and chemical tanker cargo operation; and

(5) Basic liquefied gas tanker cargo operation.

34. Add § 13.103 to read as follows:

§ 13.103 Incorporation by reference.

(a) Certain material is incorporated by reference into this part with the approval of the Director of the Federal Register under 5 U.S.C. 552(a) and 1 CFR part 51. To enforce any edition other than that specified in this section, the Coast Guard must publish a notice of change in the **Federal Register** and the material must be available to the public. All approved material is available for inspection at the National Archives and Records Administration (NARA). For information on the availability of this material at NARA, call 202–741–6030 or go to *http://www.archives.gov/federal_register/code_of_federal_regulations/ibr_locations.html.* Also, it is available for inspection at the Coast Guard, Office of Operating and Environmental Standards (CG–5221), 2100 2nd St., SW., Stop 7126, Washington, DC 20593–7126, 202–372–1405, and is available from the sources indicated in this section.

(b) International Maritime Organization (IMO), 4 Albert Embankment, London SE1 7SR, England:

(1) The Seafarers' Training, Certification and Watchkeeping Code, as amended (the STCW Code), approved for incorporation by reference in §§ 13.601, 13.603, 13.605, 13.607, and 13.609; and

(2) [Reserved]

§ 13.106 [Amended]

35. In § 13.106, remove the word ''chapter'' and add, in its place, the word ''subchapter''.

36. Amend § 13.107 as follows:

a. In paragraph (a), remove the words ''OCMI at an REC'' and add, in their place, the words ''Coast Guard''; remove the words ''''Tankerman-PIC'''' and add, in their place, the words ''tankerman-PIC''; and remove the words ''Tankerman-Engineer'' and add, in their place, the words ''tankerman-engineer'';

b. In paragraph (b), remove the words ''OCMI at an REC'' and add, in their place, the words ''Coast Guard''; and remove the words ''''Tankerman-PIC (Barge)'''' and add, in their place, the words ''tankerman-PIC (barge)'';

c. In paragraph (c), remove the words ''OCMI at an REC'' and add, in their place, the words ''Coast Guard''; remove the words ''''Tankerman-Assistant'''' and add, in their place, the words ''tankerman-assistant''; and remove the word ''shall'' and add, in its place, the word ''must'';

d. Revise paragraphs (d) and (e) to read as set down below; and

e. Remove paragraphs (f) and (g).

§ 13.107 Tankerman endorsement: General.

* * * * *

(d) If an applicant meets the requirements of subpart E of this part, the Coast Guard may endorse his or her MMC as tankerman-engineer. No person holding this endorsement may act as a PIC or tankerman-assistant of any transfer of liquid cargo in bulk, or of cargo-tank cleaning unless he or she also holds an endorsement authorizing such service. A person holding this endorsement and acting in this capacity has the primary responsibility, on his or her self-propelled tank vessel carrying dangerous liquid (DL) or liquefied gas (LG), for maintaining both the cargo systems and equipment for transfer of liquids in bulk; and for maintaining and operating the bunkering systems and equipment, including the loading of fuel oil. No person licensed or credentialed under part 11 of this chapter may serve as a chief engineer, first assistant engineer, or cargo engineer aboard an inspected self-propelled tank vessel when liquid cargo in bulk or cargo residue is carried unless he or she holds this endorsement or equivalent.

(e) If an applicant meets the requirements of § 13.111 of this subpart, the Coast Guard may place on his or her MMC an endorsement as a tankerman-PIC restricted according to the definitions of ''restricted tankerman endorsement'' in § 10.107 of this subchapter.

§ 13.109 [Amended]

37. Amend § 13.109 as follows:

a. In paragraph (a), after the words ''described in § 13.107'', add the words '', except for § 13.107(d)''; and

b. Remove paragraph (c).

38. Revise § 13.111 to read as follows:

§ 13.111 Restricted tankerman endorsement.

(a) An applicant may apply for a tankerman endorsement restricted to specific cargoes, specific vessels, or groups of vessels (such as uninspected towing vessels and Oil Spill Response Vessels), specific facilities, and/or specific employers. The Coast Guard will evaluate each application and may modify the applicable requirements for the endorsement, allowing for special circumstances and for whichever restrictions the endorsement will state.

(b) To qualify for a restricted tankerman-PIC endorsement, an applicant must meet §§ 13.201 (excluding paragraph (c)(4)), 13.203, and 13.205 of this part.

(1) Twenty-five percent of the service described in § 13.203(a) of this part must have occurred within the past 5 years.

(2) Two of the transfers described in § 13.203(b) of this part must have occurred within the past 5 years.

(c) To qualify for a restricted tankerman-PIC (barge) endorsement, an applicant must meet §§ 13.301 (excluding paragraph (c)(4)), 13.303, and 13.305 of this part.

(1) Twenty-five percent of the service described in § 13.303(a) of this part must have occurred within the past 5 years.

(2) Two of the transfers described in § 13.303(b) of this part must have occurred within the past 5 years.

(d) To qualify for a restricted tankerman-PIC (barge) endorsement restricted to a tank-cleaning and gas-freeing facility, an applicant must—

(1) Be at least 18 years old;

(2) Apply on a form provided by the Coast Guard;

(3) Present evidence of passing a physical and medical examination according to § 13.125 of this part;

(4) Present evidence in the form of a letter, which must be dated within the 5 years prior to the application of the credential, on company letterhead from the operator of the facility stating that OSHA considers the applicant a ''competent person (as designated under 29 CFR 1915.7)'' for the facility and that the applicant has the knowledge necessary to supervise tank-cleaning and gas-freeing; and

(5) Be capable of speaking and understanding, in English, all instructions needed to commence, conduct, and complete a transfer of cargo, and of reading and understanding the English found in the Declaration of Inspection, vessel response plans, and Cargo Information Cards.

(e) The restricted tankerman-PIC (barge) endorsement restricted to a tank-cleaning and gas-freeing facility is valid only while the applicant is employed by the operator of the facility that provided the letter of service required by paragraph (d)(4) of this section, and this and any other appropriate restrictions will appear in the endorsement.

(f) A restricted tankerman-PIC endorsement limited to operation on vessels inside the boundary line is not valid where STCW certification is required.

39. Add § 13.115 to read as follows:

§ 13.115 Chemical testing requirements.

Each applicant for an original tankerman endorsement must provide evidence of having passed a chemical test for dangerous drugs or of qualifying for an exemption from testing in § 16.220 of this chapter as specified in § 10.225(b)(5) of this subchapter.

40. Add § 13.117 to read as follows:

§ 13.117 Re-issuance of expired tankerman endorsements

Whenever an applicant applies for re-issuance of an endorsement as any tankerman rating more than 12 months after expiration of the previous endorsement, the applicant must meet the requirements for an original endorsement.

41. Revise § 13.120 to read as follows:

§ 13.120 Renewal of tankerman endorsement.

An applicant seeking renewal of a tankerman endorsement or an STCW endorsement valid for service on tank vessels must meet the requirements of § 10.227 of this subchapter, except § 10.227(e)(1), for renewing an MMC and meet the following additional requirements:

(a) For endorsements as tankerman-PIC, advanced oil and chemical tanker cargo operation; and advanced liquefied gas tanker cargo operations, present evidence of:

(1) At least 90 days of service during the preceding 5 years onboard a tank vessel for which the endorsement is valid, performing duties appropriate to the tankerman endorsement held; and

(2) Participation in at least two transfers of liquid cargo in bulk of the type for which the endorsement is valid within the preceding 5 years; or

(3) Completion of an approved course for Tankship: Dangerous Liquids or Tankship: Liquefied Gases, appropriate for the endorsement to be renewed, within the previous 5 years.

(b) For endorsements as tankerman-assistant, basic oil and chemical tanker cargo operation; and basic liquefied gas tanker cargo operations, present evidence of:

(1) At least 90 days of service during the preceding 5 years onboard a tank vessel for which the endorsement is valid, performing duties appropriate to the tankerman endorsement held; or

(2) Completion of an approved course for Tankship: Dangerous Liquids or Tankship: Liquefied Gases, appropriate for the endorsement to be renewed, within the previous 5 years.

(c) For endorsements as tankerman-PIC (Barge), present evidence of:

(1) Participation in at least two transfers of liquid cargo in bulk of the type for which the endorsement is valid, within the preceding 5 years; or

(2) Completion of a course approved for this purpose, appropriate for the endorsement to be renewed, within the previous 5 years.

(d) For endorsements as tankerman-engineer, present evidence of:

(1) At least 90 days of service during the preceding 5 years onboard a tank vessel for which the endorsement is valid, performing duties appropriate to the tankerman endorsement held; or

(2) Completion of a course approved for this purpose, appropriate for the endorsement to be renewed, within the previous 5 years.

42. Revise § 13.121 to read as follows:

§ 13.121 Courses for tankerman endorsements.

(a) This section prescribes the requirements, beyond those in §§ 10.302 and 10.304 of this subchapter, applicable to schools offering courses required for a tankerman endorsement and courses that are a substitute for experience with transfers of liquid cargo in bulk required for the endorsement.

(b) A course that uses simulated transfers to train students in loading and discharging tank vessels may replace up to two loadings and two discharges, one commencement and one completion of loading, and one commencement and one completion of discharge required for a tankerman-PIC or tankerman-PIC (barge) endorsement. The request for approval of the course must specify those segments of a transfer that the course will simulate. The letter from the Coast Guard approving the course will state the number and kind of segments that the course will replace.

(c) The course in liquid cargo required for an endorsement as—

(1) Tankerman-PIC DL is Tankship: Dangerous Liquids;

(2) Tankerman-PIC (barge) DL is Tank Barge: Dangerous Liquids;

(3) Tankerman-PIC LG is Tankship: Liquefied Gases;

(4) Tankerman-PIC (barge) LG is Tank Barge: Liquefied Gases;

(5) Tankerman assistant DL is Tankship: Familiarization (Dangerous Liquids);

(6) Tankerman assistant LG is Tankship: Familiarization (Liquefied Gases);

(7) Tankerman-engineer DL is Tankship: Dangerous Liquids; and

(8) Tankerman-engineer LG is Tankship: Liquefied Gases.

(d) The course in firefighting required for an endorsement as—

(1) Tankerman-PIC (barge) is Tank Barge: Firefighting; and

(2) Tankerman-PIC, tankerman-assistant, and tankerman-engineer is basic firefighting.

(e) The Coast Guard will evaluate and approve the curricula of courses to ensure adequate coverage of the required subjects. Training may employ classroom instruction, demonstrations, or simulated or actual operations.

(1) The course curricula for Tankship Familiarization must consist of the topics identified in Table 1 to § 13.121.

(2) The course curricula for tankerman-PIC, tankerman-PIC (barge), and tankerman-engineer endorsements must consist of the topics identified in Table 2 to § 13.121.

(3) The course curricula for firefighting courses must consist of the topics identified in Table 3 to § 13.121.

TABLE 1 TO § 13.121

Tankerman-assistant topics	1	2
Basic knowledge of tankers:		
Types of oil and chemical vessels or liquefied gas tanker vessels	X	X
General arrangement and construction	X	X
Basic knowledge of cargo operations:		
Piping systems and valves	X	X
Cargo pumps and cargo handling equipment	X	X
Loading and unloading and care in transit	X	X
Tank cleaning, purging, gas-freeing and inerting	X	X
Basic knowledge of the physical properties of oil and chemicals:		
Pressure and temperature, including vapor pressure/temperature relationship	X	
Types of electrostatic charge generation	X	
Chemical symbols	X	
Basic knowledge of the physical properties of liquefied gases, including:		
Properties and characteristics		X
Pressure and temperature, including vapor pressure/temperature relationship		X
Types of electrostatic charge generation		X
Chemical symbols		X
Knowledge and understanding of tanker safety culture and safety management	X	X
Basic knowledge of the hazards associated with tanker operations, including:		
Health hazards	X	X
Environmental hazards	X	X
Reactivity hazards	X	X
Corrosion hazards	X	X
Explosion and flammability hazards	X	X
Sources of ignition	X	X
Electrostatic hazards	X	X
Toxicity hazards	X	X
Vapor leaks and clouds	X	X
Extremely low temperatures		X
Pressure hazards		X
Basic knowledge of hazard controls:		
Inerting, water padding, drying agents and monitoring techniques	X	X
Anti-static measures	X	X
Ventilation	X	X
Segregation	X	X
Cargo inhibition	X	X
Importance of cargo compatibility	X	X
Atmospheric control	X	X
Gas testing	X	X
Understanding of information on a Material Safety Data Sheet (MSDS)	X	X
Function and proper use of gas-measuring instruments and similar equipment	X	X
Proper use of safety equipment and protective devices, including:		
Breathing apparatus and tank-evacuating equipment	X	X
Protective clothing and equipment	X	X
Resuscitators	X	X
Rescue and escape equipment	X	X
Basic knowledge of safe working practices and procedures in accordance with legislation and industry guidelines and personal shipboard safety relevant to oil and chemical tankers, including:		
Precautions to be taken when entering enclosed spaces	X	X
Precautions to be taken before and during repair and maintenance work	X	X
Safety measures for hot and cold work	X	X
Electrical safety	X	X
Ship/shore safety checklist	X	X
Basic knowledge of first aid with reference to a Material Safety Data Sheet (MSDS)	X	X
Basic knowledge of emergency procedures, including emergency shutdown	X	X
Basic knowledge of the effects of oil and chemical pollution on human and marine life	X	X
Basic knowledge of shipboard procedures to prevent pollution	X	X
Basic knowledge of measures to be taken in the event of spillage, including the need to:		
Report relevant information to the responsible persons	X	X
Assist in implementing shipboard spill-containment procedures	X	X
Prevent brittle fracture		X

Column 1—Tankerman-Assistant DL.
Column 2—Tankerman-Assistant LG.

TABLE 2 TO § 13.121

Tankerman-PIC and tankerman-PIC (Barge) course topics	1	2	3	4
General characteristics, compatibility, reaction, firefighting procedures, and safety precautions for the cargoes of:				
Bulk liquids defined as Dangerous Liquids in 46 CFR Part 13	X	X	....	....
Bulk liquefied gases & their vapors defined as Liquefied Gases in 46 CFR Part 13	....	....	X	X
Knowledge and understanding of the physical and chemical properties of oil and chemical cargoes	X	....	....	....
Physical phenomena of liquefied gas, including:				
Basic concept	....	....	X	X
Compression and expansion	....	....	X	X
Mechanism of heat transfer	....	....	X	X
Potential hazards of liquefied gas, including:				
Chemical and physical properties	....	....	X	X
Combustion characteristics	....	....	X	X
Results of gas release to the atmosphere	....	....	X	X
Health hazards (skin contact, inhalation, and ingestion)	....	....	X	X
Control of flammability range with inert gas	....	....	X	X
Thermal stress in structure and piping of vessel	....	....	X	X
Cargo systems, including:				
Principles of containment systems	X	X	X	X
Construction, materials, coating, & insulation of cargo tanks	....	....	X	X
General arrangement of cargo tanks	X	X	X	X
Venting and vapor-control systems	X	X	X	X
Cargo-handling systems, including:				
Piping systems, valves, pumps, and expansion systems	X	X	X	X
Operating characteristics	X	X	X	X
Instrumentation systems, including:				
Cargo-level indicators	X	X	X	X
Gas-detecting systems	X	....	X	X
Temperature-monitoring systems, cargo	X	....	X	X
Temperature-monitoring systems, hull	....	....	X	X
Automatic-shutdown systems	X	....	X	X
Auxiliary systems, including:				
Ventilation, inerting	X	X	X	X
Valves, including:				
Quick-closing	X	X	X	X
Remote-control	X	X	X	X
Pneumatic	X	X	X	X
Excess-flow	X	X	X	X
Safety-relief	X	X	X	X
Pressure-vacuum	X	X	X	X
Heating-systems: cofferdams & ballast tanks	....	....	X	X
Operations connected with the loading and discharging of cargo, including:				
Lining up the cargo and vapor-control systems	X	X	X	X
Pre-transfer inspections and completion of the Declaration of Inspection	X	X	X	X
Hooking up of cargo hose, loading arms, and grounding-strap	X	X	X	X
Starting of liquid flow	X	X	X	X
Calculation of loading rates	X	....	X	....
Discussion of loading	X	X	X	X
Ballasting and deballasting	X	X	X	X
Topping off of the cargo tanks	X	X	X	X
Discussion of discharging	X	X	X	X
Stripping of the cargo tanks	X	X	....	....
Monitoring of transfers	X	X	X	X
Gauging of cargo tanks	X	X	X	X
Disconnecting of cargo hoses or loading arms	X	X	X	X
Cargo-tank-cleaning procedures and precautions	X	X	....	....
Slop arrangements	X	....	....	....
Ship-to-ship transfers	X	....	....	....
Operating procedures and sequence for:				
Inerting of cargo tanks and void spaces	X	X	X	X
Cooldown and warmup of cargo tanks	....	....	X	X
Gas-freeing	X	X	X	X
Loaded or ballasted voyages	X	....	X	....
Testing of cargo-tank atmospheres for oxygen & cargo vapor	X	X	X	X
Stability and stress considerations connected with loading and discharging of cargo	X	X	X	X
Loadline, draft, and trim	X	X	X	X
Disposal of boil-off, including:				
System design	....	....	X	X
Safety features	....	....	X	X
Stability-letter requirements	X	....	X	....
Emergency procedures, including notice to appropriate authorities, for:				
Fire	X	X	X	X
Collision	X	X	X	X
Grounding	X	X	X	X

TABLE 2 TO § 13.121—Continued

Tankerman-PIC and tankerman-PIC (Barge) course topics	1	2	3	4
Equipment failure	X	X	X	X
Leaks and spills	X	X	X	....
Structural failure	X	X	X	X
Emergency discharge of cargo	X	X	X	X
Entering cargo tanks	X	X	X	X
Emergency shutdown of cargo-handling	X	X	X	X
Emergency systems for closing cargo tanks	X	X	....	....
Rules & regulations (international and Federal, for all tank vessels) on conducting operations and preventing pollution	X	X	X	X
Pollution prevention, including:				
Procedures to prevent air and water pollution	X	X	X	X
Measures to take in event of spillage	X	X	X	X
Danger from drift of vapor cloud	X	X	X	X
Environmental protection equipment, including oil discharge monitoring equipment	X	....	....	....
Terminology for tankships carrying oil and chemicals	X	....	....	....
Terminology for tank barges carrying oil and chemicals	....	X	....	....
Terminology for tankships carrying liquefied gases	....	....	X	....
Terminology for tank barges carrying liquefied gases	....	....	....	X
Principles & procedures of crude-oil-washing (COW) systems, including:				
Purpose	X	....	....	....
Equipment and design	X	....	....	....
Operations	X	....	....	....
Safety precautions	X	....	....	....
Maintenance of plant and equipment	X	....	....	....
Principles & procedures of the inert-gas systems (IGSs), including:				
Purpose	X	....	X	....
Equipment and design	X	....	X	....
Operations	X	....	X	....
Safety precautions	X	....	X	....
Maintenance of plant and equipment	X	....	X	....
Principles & procedures of vapor-control systems, including:				
Purpose	X	X	X	X
Principles	X	X	X	X
Coast Guard regulations	X	X	X	X
Hazards	X	X	X	X
Active system components	X	X	X	X
Passive system components	X	X	X	X
Operating procedures, including:				
Testing and inspection requirements	X	X	X	X
Pre-transfer procedures	X	X	X	X
Connecting sequence	X	X	X	X
Start-up sequence	X	X	X	X
Normal operations	X	X	X	X
Loading and unloading plans	X	....	....	....
Emergency procedures	X	X	X	X
Cargo-hazard-information systems	X	X	X	X
Safe entry into confined spaces, including:				
Testing tank atmospheres for oxygen & hydrocarbon vapors	X	X	....	....
Definition and hazards of confined spaces	X	X	X	X
Cargo tanks and pumprooms	X	X	X	X
Evaluation and assessment of risks and hazards	X	X	X	X
Safety precautions and procedures	X	X	X	X
Enclosed space rescue	X	....	....	....
Personnel protective equipment (PPE) and clothing	X	X	X	X
Maintenance of PPE	X	X	X	X
Dangers of skin contact	X	X	X	X
Inhalation of vapors	X	X	....	....
Electricity and static electricity—hazards and precautions	X	X	X	X
Emergency procedures	X	X	X	X
Federal regulations, national standards & industry guidelines	X	X	X	X
Inspections by marine chemists & competent persons, including hot-work permits & procedures	X	X	X	X
Vessel response plans:				
Purpose, content, and location of information	X	X	X	X
Procedures for notice and mitigation of spills	X	X	X	X
Geographic-specific appendices	X	X	X	X
Vessel-specific appendices	X	X	X	X
Emergency-action checklist	X	X	X	X

Column 1—Tankship: Dangerous Liquids.
Column 2—Tank Barge: Dangerous Liquids.
Column 3—Tankship: Liquefied Gases.
Column 4—Tank Barge: Liquefied Gases.

TABLE 3 TO 1 § 3.121

Firefighting course topics	1	2
Elements of fire (Fire triangle):		
Fuel	X	X
Source of ignition	X	X
Oxygen	X	X
Ignition sources (general):		
Chemical	....	X
Biological	....	X
Physical	....	X
Ignition sources applicable to barges	X	....
Definitions of flammability and combustibility:		
Flammability	X	X
Ignition point	X	X
Burning temperature	X	X
Burning speed	....	X
Thermal value	....	X
Lower flammable limit	X	X
Upper flammable limit	X	X
Flammable range	X	X
Inerting	....	X
Static electricity	X	X
Flash point	X	X
Auto-ignition	X	X
Spread of fire:		
By radiation	X	X
By convection	X	X
By conduction	X	X
Reactivity	X	X
Fire classifications and applicable extinguishing agents	X	X
Main causes of fires:		
Oil leakage	X	X
Smoking	X	X
Overheating pumps	X	X
Galley appliances	....	X
Spontaneous ignition	X	X
Hot work	X	X
Electrical apparatus	....	X
Reaction, self-heating, and auto-ignition	....	X
Fire prevention:		
General	X	X
Fire hazards of DL and LG	X	X
Fire detection:		
Fire- and smoke-detection systems	....	X
Automatic fire alarms	....	X
Firefighting equipment:		
Fire mains, hydrants	....	X
International shore-connection	....	X
Smothering-installations, carbon dioxide (CO_2), foam	....	X
Halogenated hydrocarbons	....	X
Pressure-water spray system in special-category spaces	....	X
Automatic sprinkler system	....	X
Emergency fire pump, emergency generator	....	X
Chemical-powder applicants	....	X
General outline of required and mobile apparatus	....	X
Fireman's outfit, personal equipment	....	X
Breathing apparatus	....	X
Resuscitation apparatus	....	X
Smoke helmet or mask	....	X
Fireproof life-line and harness	....	X
Fire hose, nozzles, connections, and fire axes	....	X
Fire blankets	....	X
Portable fire extinguishers	X	X
Limitations of portable and semiportable extinguishers	X	X
Emergency procedures:		
Arrangements:		
Escape routes	X	X
Means of gas-freeing tanks	X	X
Class A, B, and C divisions	....	X
Inert-gas system	....	X
Ship firefighting organization:		
General alarms	....	X
Fire-control plans, muster stations, and duties	....	X
Communications	....	X

TABLE 3 TO 1 § 3.121—Continued

Firefighting course topics	1	2
Periodic shipboard drills	....	X
Patrol system	....	X
Basic firefighting techniques:		
Sounding alarm	X	X
Locating and isolating fires	X	X
Stopping leakage of cargo	X	X
Jettisoning	....	X
Inhibiting	....	X
Cooling	....	X
Smothering	....	X
Sizing up situation	X	....
Locating information on cargo	X	....
Extinguishing	X	X
Extinguishing with portable units	X	X
Setting reflash watch	X	X
Using additional personnel	X	X
Firefighting extinguishing-agents:		
Water (solid jet, spray, fog, and flooding)	....	X
Foam (high, medium and low expansion)	....	X
Carbon dioxide (CO_2)	X	X
Halon	....	X
Aqueous-film-forming foam (AFFF)	....	X
Dry chemicals	X	X
Use of extinguisher on:		
Flammable and combustible liquids	X	X
Manifold-flange fire	X	X
Drip-pan fire	X	X
Pump fire	X	X
Drills for typical fires on barges	X	....
Field exercises:		
Extinguish small fires using portable extinguishers:		
Electrical	X	X
Manifold-flange	X	X
Drip-pan	X	X
Pump	X	X
Use self-contained breathing apparatus	....	X
Extinguish extensive fires with water	....	X
Extinguish fires with foam, or chemical	....	X
Fight fire in smoke-filled enclosed space wearing SCBA	....	X
Extinguish fire with water fog in an enclosed space with heavy smoke	....	X
Extinguish oil fire with fog applicator and spray nozzles, dry-chemical, or foam applicators	....	X
Effect a rescue in a smoke-filled space while wearing breathing apparatus	....	X

(1) Tankerman-PIC (Barge).
(2) Tankerman-PIC, tankerman-engineer, and tankerman-assistant.

§ 13.123 [Amended]

43. In § 13.123, remove the word ''shall'' and add, in its place, the word ''must''; remove the symbol ''%'' and add, in its place, the word ''percent''; and remove the word ''five'' and add, in its place, the number ''5''.

§ 13.125 [Amended]

44. In § 13.125, remove the word ''shall'' and add, in its place, the word ''must''; and after the words ''physical requirements of'', remove the words ''§ 10.215 of this chapter, excluding paragraph (d)(2) of that section'' and add, in their place, the words ''part 10, subpart C''.

45. Amend § 13.127 as follows:

a. Revise paragraph (a) to read as set down below;

b. In paragraph (b) introductory text, remove the words ''paragraph (a)(2)'' and add, in their place, the words ''paragraph (a)(3)'';

c. In paragraphs (b)(2) and (b)(5), remove the word ''four'' and add, in its place, the number ''4'';

d. In paragraph (b)(4), after the word ''one discharge'', remove the word ''a'' and add, in its place, the words ''conducted during each'';

e. In paragraph (b)(6), remove the word ''cargo'' wherever it appears;

f. In paragraph (b)(7), after the words ''Declaration of Inspection, the connection of'', remove the word ''cargo''; and after the words ''the start of the'', remove the word ''cargo''; and

g. In paragraph (b)(9), remove the words ''§ 13.203(b) or 13.303(b)'' and add, in their place, the words ''§§ 13.203(b) or 13.303(b) of this subchapter''.

§ 13.127 Service: General.

(a) A service letter must be signed by the owner, operator, master, or chief engineer of the vessel and must specify—

(1) The name of the vessel, official number for the vessel, and date of service for each vessel;

(2) For endorsements as tankerman-PIC, tankerman-PIC (barge), and tankerman-assistant, the classification of cargo (DL, LG, or, for a restricted endorsement, a specific product) handled while the applicant accumulated the service;

(3) The dates, the numbers and kinds of transfers the applicants have participated in, the ports or terminals, and the number of transfers that involved commencement or completion of loading or discharge; and

(4) For endorsements as tankerman-PIC or tankerman-PIC (barge), that the

applicant has demonstrated to the satisfaction of the signer that he or she is fully capable of supervising transfers of liquid cargo, including—

(i) Pre-transfer inspection;

(ii) Pre-transfer conference and execution of the Declaration of Inspection;

(iii) Connection of cargo hoses or loading-arms;

(iv) Line-up of the cargo system for loading and discharge;

(v) Start of liquid flow during loading;

(vi) Start of cargo pump and increase of pressure to normal discharge pressure;

(vii) Calculation of loading-rates;

(viii) Monitoring;

(ix) Topping-off of cargo tanks during loading;

(x) Stripping of cargo tanks;

(xi) Ballasting and deballasting, if appropriate;

(xii) Disconnection of the cargo hoses or loading-arms; and

(xiii) Securing of cargo systems.

(5) For endorsements as tankerman-engineer, that the applicant has demonstrated to the satisfaction of the signer that he or she is fully capable of supervising transfers of fuel oil, including:

(i) Pre-transfer inspection;

(ii) Pre-transfer conference and execution of the Declaration of Inspection;

(iii) Connection of hoses or loading-arms;

(iv) Line-up of the piping system for loading and transfer of fuel oil;

(v) Start of liquid flow during loading;

(vi) Calculation of loading rates;

(vii) Monitoring;

(viii) Topping-off of tanks during loading;

(ix) Disconnection of the hoses or loading arms; and

(x) Securing of fuel oil systems.

* * * * *

46. Revise § 13.129 to read as follows:

§ 13.129 Quick-reference table for tankerman endorsements.

Table 13.129 provides a guide to the requirements for various tankerman endorsements. Provisions in the reference sections are controlling.

TABLE 13.129

Category	Minimum age	Physical required	Service	Recency of service	Proof of service	Firefighting	Cargo Training	English language
Tankerman-PIC Subpart B.	18; 13.201(a)	Yes; Part 10, subpart C.	13.203	13.123	13.205	13.201(c)(3)	13.201(c)(4)	13.201(d)
Tankerman-PIC (Barge) Subpart C.	18; 13.301(a)	Yes; Part 10, subpart C.	13.303	13.123	13.305	13.301(c)(3)	13.301(c)(4)	13.301(d)
Tankerman-Assistant Subpart D.	18; 13.401(a)	Yes; Part 10, subpart C.	13.401(e)(2)	13.123	13.405	13.401(d)	13.401(e)(1)	13.401(f)
Tankerman-Engineer Subpart E.	18; 13.501(a)	Yes; Part 10, subpart C.	13.503	13.123	13.505	13.501(c)(3)	13.501(c)(4)	13.501(d)
Restricted Tankerman-PIC.	18; 13.111(b)	Yes; Part 10, subpart C.	13.111(b)	13.111(b)	13.111(b)	13.111(b)	No	13.111(b)
Restricted Tankerman-PIC (Barge).	18; 13.111(c)	Yes; Part 10, subpart C.	13.111(c)	13.111(c)	13.111(c)	13.111(c)	No	13.111(c)
Restricted Tankerman-PIC (Barge), Facility.	18; 13.111(d)(1)	Yes; Part 10, subpart C.	13.111(d)(4)	No	13.111(d)(4)	No	No	13.111(d)(5)

47. Revise the heading for subpart B to read as follows:

Subpart B—Requirements for Tankerman-PIC Endorsement

48. Revise § 13.201 to read as follows:

§ 13.201 Original application for tankerman-PIC endorsement.

Each applicant for an original tankerman-PIC endorsement must—

(a) Be at least 18 years old;

(b) Apply on a Coast Guard form;

(c) Present evidence of:

(1) Passing a physical and medical examination in accordance with § 13.125 of this part;

(2) Service on tankships in accordance with § 13.203 of this subpart;

(3) Completion of an approved firefighting course that provides training in the subjects listed in Table 13.121(g) of this part completed within 5 years of the date of application for the endorsement, unless he or she has previously submitted such a certificate for a license, tankerman endorsement, or officer endorsement on an MMC; and

(4) Completion of an approved course for Tankship: Dangerous Liquids or Tankship: Liquefied Gases appropriate to the endorsement applied for within the previous 5 years. A course certificate used for original issuance or renewal of an endorsement cannot be used for a subsequent renewal of the same endorsement.

(d) Be capable of speaking and understanding, in English, all instructions needed to commence, conduct, and complete a transfer of cargo, and be capable of reading and understanding the English language found in the Declaration of Inspection, vessel response plans, and Cargo Information Cards.

49. Amend § 13.203 as follows:

a. Revise the section heading to read as set down below;

b. In § 13.203 introductory text, remove the words ''''Tankerman-PIC'''' and add, in their place, the words ''tankerman-PIC''; and remove the word ''shall'' and add, in its place, the word ''must'';

c. In paragraph (a), remove the word ''shall'' and add, in its place, the word ''must''; and

d. In paragraphs (b) and (c), remove the word ''shall'' and add, in its place, the word ''must''; and remove the words ''''Tankerman-PIC'''' and add, in their place, the words ''tankerman-PIC''.

§ 13.203 Service requirements.

* * * * *

50. Amend § 13.205 as follows:

a. Revise the section heading to read as set down below; and

b. In § 13.205 introductory text, remove the words ''Service must be provided by'' and add, in their place, the words ''Proof of service must be provided in''.

§ 13.205 Proof of service for tankerman-PIC endorsement.

* * * * *

§ 13.207 [Removed]

51. Remove § 13.207.

§ 13.209 [Removed]

52. Remove § 13.209.

53. Revise the heading for subpart C to read as follows:

Subpart C—Requirements for Tankerman-PIC (Barge) Endorsement

54. Revise § 13.301 to read as follows:

§ 13.301 Original application for tankerman-PIC (barge) endorsement.

Each applicant for a tankerman-PIC (barge) endorsement must—

(a) Be at least 18 years old;

(b) Apply on a Coast Guard form;

(c) Present evidence of:

(1) Passing a physical and medical examination according to § 13.125 of this part;

(2) Service on tank vessels in accordance with § 13.303 of this subpart;

(3) Completion of an approved Tank-barge: Fire fighting course providing training in the subjects identified in Table 13.121(g) of this part completed within 5 years of the date of application for the endorsement, unless he or she has previously submitted such a certificate for a license, tankerman endorsement, or officer endorsement on an MMC; and

(4) Completion of an approved Tank Barge Dangerous Liquids or Tank Barge Liquefied Gases course appropriate for the endorsement applied for within the previous 5 years. A course certificate used for original issuance or renewal of an endorsement cannot be used for a subsequent renewal of the same endorsement; and

(d) Be capable of speaking, and understanding, in English, all instructions needed to commence, conduct, and complete a transfer of cargo, and be capable of reading and understanding the English language found in the Declaration of Inspection, vessel response plans, and Cargo Information Cards.

55. Amend § 13.303 to read as follows:

a. Revise the section heading to read as set down below;

b. In § 13.303 introductory text, remove the words " "Tankerman-PIC (Barge)" " and add, in their place, the words "tankerman-PIC (barge)"; and remove the word "shall" and add, in its place, the word "must";

c. In paragraph (a), remove the word "shall" and add, in its place, the word "must";

d. In paragraph (b), remove the words " "Tankerman-PIC" or "Tankerman-PIC (barge)," " and add, in their place, the words "tankerman-PIC or tankerman-PIC (barge),"; and

e. In paragraph (c), remove the words "Tankerman-PIC (Barge)" and add, in their place, the words "tankerman-PIC (barge)"; and remove the word "shall" and add, in its place, the word "must".

§ 13.303 Service requirements.

* * * * *

56. Amend § 13.305 as follows:

a. Revise the section heading to read as set down below; and

b. In § 13.305 introductory text, remove the words "Service must be provided by" and add, in their place, the words "Proof of service must be provided in"; and remove the words "paragraph (a)(3)(vii)" and add, in their place, the words "paragraph (a)(4)(vii)".

§ 13.305 Proof of service for tankerman-PIC (barge).

* * * * *

§ 13.307 [Removed]

57. Remove § 13.307.

§ 13.309 [Removed]

58. Remove § 13.309.

59. Revise the heading for subpart D to read as follows:

Subpart D—Requirements for Tankerman-Assistant Endorsement

60. Revise § 13.401 to read as follows:

§ 13.401 Original application for tankerman-assistant endorsement.

Each applicant for a tankerman-assistant endorsement must—

(a) Be at least 18 years old;

(b) Apply on a Coast Guard form;

(c) Present evidence of passing a physical and medical examination according to § 13.125 of this part;

(d) Present evidence of completion of an approved firefighting course providing training in the subjects identified in Table 13.121(g) of this part completed within 5 years of the date of application for the endorsement, unless he or she has previously submitted such a certificate for a license, tankerman endorsement, or officer endorsement on an MMC;

(e) Present evidence of either:

(1) Completion of an approved Tankship Familiarization course providing training in the subjects identified in Table 13.121(e) of this part within the previous 5 years. A course certificate used for original issuance or renewal of an endorsement cannot be used for a subsequent renewal of the same endorsement; or

(2) At least 90 days of deck service on tankships or self-propelled tank vessels certified to carry DL or LG appropriate to the endorsement applied for and successfully complete a professional examination for the topics identified in Table 13.121(e) of this part; and

(f) Be capable of speaking and understanding, in English, all instructions needed to commence, conduct, and complete a transfer of cargo.

61. Revise § 13.403 to read as follows:

§ 13.403 Service requirements.

(a) Each applicant already holding an MMD or MMC endorsed tankerman-assistant for DL and seeking one for LG, or the converse, must—

(1) Provide evidence of at least half the service required in § 13.401(e)(2) of this subpart; or

(2) Complete a course in DL or LG appropriate for the endorsement applied for as prescribed in § 13.401(e)(1) of this subpart and successfully complete a professional examination for the topics identified in Table 13.121(f) of this part.

62. Revise § 13.405 to read as follows:

§ 13.405 Proof of service for tankerman-assistant endorsement.

Service must be proved by either:

(a) A letter on company letterhead from the owner, operator, or master of a tankship or self-propelled tank vessel. The letter must specify—

(1) The name of the vessel(s), the applicable dates, and the port(s) or terminal(s);

(2) The classification of cargo (DL or LG) carried while the applicant accumulated the service;

(3) The number of days of deck service the applicant accumulated on the tankship or self-propelled tank vessel; and

(4) That the applicant has demonstrated an understanding of cargo transfer and a sense of responsibility that, in the opinion of the signer, will allow the applicant to safely carry out duties respecting cargo transfer and transfer equipment assigned by the PIC of the transfer without direct supervision by the PIC; or

(b) Certificates of Discharge from tankships with the appropriate classification of cargo (DL, LG, or both); and a letter on company letterhead from the owner, operator, or master of one of the tankships or self-propelled tank vessels stating that he or she has demonstrated—

(1) An understanding of cargo transfers; and

(2) A sense of responsibility that, in the opinion of the signer, will allow him or her to safely carry out duties respecting cargo and its equipment assigned by the PIC of the transfer without direct supervision by the PIC.

§ 13.407 [Removed]

63. Remove § 13.407.

§ 13.409 [Removed]

64. Remove § 13.409.

65. Revise the heading for subpart E to read as follows:

Subpart E—Requirements for Tankerman-Engineer Endorsement

66. Revise § 13.501 to read as follows:

§ 13.501 Original application for tankerman-engineer endorsement.

Each applicant for a tankerman-engineer endorsement must—

(a) Be at least 18 years old;

(b) Apply on a Coast Guard form;

(c) Present evidence of:

(1) Passing a physical and medical examination according to § 13.125 of this part;

(2) Service on tankships and self-propelled tank vessels in accordance with § 13.503 of this subpart;

(3) Completion of an approved firefighting course providing training in the subjects identified in Table 13.121(g) of this part completed within 5 years of the date of application for the endorsement, unless he or she has previously submitted such a certificate for a license, tankerman endorsement, or officer endorsement on an MMC; and

(4) Completion of an approved Tankship course in dangerous liquids or liquefied gases, appropriate for the endorsement applied for within the previous 5 years. A course certificate used for original issuance or renewal of an endorsement cannot be used for a subsequent renewal of the same endorsement; and

(d) Be capable of speaking and understanding, in English, all instructions needed to commence, conduct, and complete a transfer of cargo or fuel.

67. Amend § 13.503 as follows:

a. Revise the section heading to read as set down below;

b. In paragraph (a), remove the words ''Tankerman-Engineer'' and add, in their place, the words ''tankerman-engineer''; and remove the word ''shall'' and add, in its place, the word ''must''; and

c. Remove paragraph (b).

§ 13.503 Service requirements.

* * * * *

68. Amend § 13.505 as follows:

a. Revise the section heading to read as set down below;

b. Add new paragraph (a)(1) to read as set down below; and

c. In paragraph (b), remove the words ''(DL, LG, or both)''.

§ 13.505 Proof of service for tankerman-engineer endorsement.

(a) * * *

(1) The name of the vessels, applicable dates, and ports or terminals;

* * * * *

§ 13.507 [Removed]

69. Remove § 13.507

§ 13.509 [Removed]

70. Remove § 13.509

71. Add new subpart F, consisting of §§ 13.601 through 13.609, to read as follows:

Subpart F—Requirements for STCW Tankerman Endorsements

Sec.

13.601 General.
13.603 Requirements to qualify for an STCW endorsement for advanced oil tanker cargo operations and advanced chemical tanker cargo operations.
13.605 Requirements to qualify for an STCW endorsement for advanced liquefied gas tanker cargo operations.
13.607 Requirements to qualify for an STCW endorsement for basic oil and chemical tanker cargo operations.
13.609 Requirements to qualify for an STCW endorsement for basic liquefied gas tanker cargo operations.

§ 13.601 General.

(a) When all tankerman endorsements are issued, renewed, or otherwise modified, the Coast Guard will determine, upon request, whether the applicant meets the requirements for an STCW tankerman endorsement for service on seagoing vessels. If the applicant is qualified, the Coast Guard will issue the appropriate endorsement.

(b) Applicants for an STCW tankerman endorsement must:

(1) Meet the training and service requirements for the endorsement sought; and

(2) Meet the appropriate standard of competence identified in the STCW Code (incorporated by reference, see § 13.103 of this part).

(c) The Coast Guard will accept the following proof as meeting the standards of competence:

(1) In-service experience: documentation of successful completion of assessments, approved or accepted by the Coast Guard, and signed by a seafarer with a higher credential, deck or engineering, as appropriate, than the assessment related to the credential sought by the applicant.

(2) Training ship experience: documentation of successful completion of an approved training program involving formal training and assessment onboard a school ship.

(3) Simulator training: documentation of successful completion of training and assessment from a Coast Guard-approved course involving maritime simulation.

(4) Training program: documentation in the form of a record of training attesting completion of a competence or a series of competences.

(d) The Coast Guard will publish assessment guidelines that should be used to document successful demonstrations of competence. Organizations may develop alternative assessment documentation for demonstrations of competence that must be approved by the Coast Guard prior to their use and submittal with an application.

§ 13.603 Requirements to qualify for an STCW endorsement for advanced oil tanker cargo operations and advanced chemical tanker cargo operations.

(a) Every applicant for an endorsement in advanced oil and advanced chemical tanker operations must:

(1) Meet the requirements of §§ 13.201 and 13.203 of this part for a dangerous liquids endorsement; and

(2) Provide evidence of meeting the standards of competence identified in Tables A–V/1–1–2 and A–V/1–1–3 of the STCW Code (incorporated by reference, see § 13.103 of this part).

(b) *Grandfathering.* Seafarers holding a valid tankerman-PIC for dangerous liquids endorsements issued prior to July 1, 2013 will be issued an STCW endorsement for advanced oil and chemical tanker cargo operations without meeting the requirements of paragraph (a) of this section. After January 1, 2017, all seafarers must meet the requirements of this section.

§ 13.605 Requirements to qualify for an STCW endorsement for advanced liquefied gas tanker cargo operations.

(a) Every applicant for an endorsement in advanced liquefied gas tanker operations must:

(1) Meet the requirements of §§ 13.201 and 13.203 of this part for a liquefied gases endorsement; and

(2) Provide evidence of meeting the standards of competence identified in Table A–V/1–2–2 of the STCW Code (incorporated by reference, see § 13.103 of this part).

(b) *Grandfathering.* Seafarers holding a valid tankerman-PIC for liquefied gases endorsements issued prior to July 1, 2013 will be issued an STCW endorsement for advanced liquefied gas tanker cargo operations without meeting the requirements of paragraph (a) of this section. After January 1, 2017, all seafarers must meet the requirements of this section.

§ 13.607 Requirements to qualify for an STCW endorsement for basic oil and chemical tanker cargo operations.

(a) Every applicant for an endorsement in basic oil and chemical tanker operations must provide evidence of meeting the standards of competence identified in Table A–V/1–1–1 of the STCW Code (incorporated by reference, see § 13.103 of this part) and—

(1) Meet the requirements of §§ 13.401 and 13.403 of this part for a dangerous liquids endorsement, as appropriate; or

(2) Meet the requirements of §§ 13.501 and 13.503 of this part for a dangerous liquids endorsement, as appropriate.

(b) *Grandfathering.* Seafarers holding a valid tankerman-assistant for dangerous liquids or tankerman-engineer endorsement issued prior to July 1, 2013 will be issued an STCW endorsement for basic oil and chemical tanker cargo operations without meeting the requirements of paragraph (a) of this section. After January 1, 2017, all seafarers must meet the requirements of this section.

§ 13.609 Requirements to qualify for an STCW endorsement for basic liquefied gas tanker cargo operations.

(a) Every applicant for an endorsement in basic liquefied gas tanker operations must provide evidence of meeting the standards of competence identified in Table A–V/1–2–1 of the STCW Code (incorporated by reference, see § 13.103 of this part) and—

(1) Meet the requirements of §§ 13.401 and 13.403 of this part for a liquefied gases endorsement, as appropriate; or

(2) Meet the requirements of §§ 13.501 and 13.503 of this part for a liquefied gases endorsement, as appropriate.

(b) *Grandfathering.* Seafarers holding a valid tankerman-assistant for liquefied gases or tankerman-engineer endorsement issued prior to July 1, 2013 will be issued an STCW endorsement for basic oil and chemical tanker cargo operations without meeting the requirements of paragraph (a) of this section. After January 1, 2017, all seafarers must meet the requirements of this section.

PART 14—SHIPMENT AND DISCHARGE OF MERCHANT MARINERS

72. The authority citation for part 14 continues to read as follows:

Authority: 5 U.S.C. 552; 46 U.S.C. Chapters 103 and 105; 46 U.S.C. 70105.

§ 14.201 [Amended]

73. Amend § 14.201 as follows:

a. In paragraph (a), remove the word ''shall'' wherever it appears and add, in its place, the word ''must'';

b. In paragraph (b), after the words ''Except as provided by § 14.203'', add the words ''of this subpart''; and remove the words ''gross tons'' wherever they appear and add, in their place, the word ''GRT''.

§ 14.205 [Amended]

74. In § 14.205, remove the word ''shall'' and add, in its place, the word ''must''.

75. Revise § 14.207 to read as follows:

§ 14.207 Content and form of shipping articles.

(a)(1) The content and form of shipping articles for each vessel of the United States of 100 GRT or more upon a foreign or intercoastal voyage must comply with the requirements of 46 U.S.C. 10302, 10303, 10304, and 10305. The articles must identify the nature of the voyage and specify at least the name, license, MMD or MMC number, capacity of service, time due onboard to begin work, and name and address of the next of kin, and wages due to each merchant mariner, either who was discharged or whose services were otherwise terminated during the month.

(2) The content and form of articles for each such vessel upon a coastwise voyage (including a voyage on the Great Lakes) must also comply with the requirements of 46 U.S.C. 10502. The articles must specify at least the matter identified by paragraph (a)(1) of this section, except that they must not specify the wages due to the mariner. The wages section of the form must be left blank for coastwise voyages.

(b) Any shipping company that manually prepares the articles may, upon request, obtain a form from the Coast Guard.

(c) Any company that electronically prepares the articles may develop its own software or buy it off the shelf; but, in either of these cases, it must secure approval to use the software for these purposes from the National Maritime Center at any of the addresses provided in § 14.103 of this part.

§ 14.209 [Amended]

76. In § 14.209, remove the word ''shall'' and add, in its place, the word ''must''.

§ 14.211 [Amended]

77. In § 14.211, remove the word ''shall'' and add, in its place, the word ''must''.

78. Amend § 14.213 as follows:

a. In paragraph (a), remove the word ''shall'' wherever it appears, and add, in its place, the word ''must'';

b. Revise paragraph (b) to read as set down below; and

c. In paragraph (c), remove the word ''shall'' and add, in its place, the word ''must''.

§ 14.213 Report of shipment of merchant mariner.

* * * * *

(b) When a vessel of the United States sails exclusively on the Great Lakes:

(1) Each master or individual in charge must, at the commencement of the season, or once the vessel is put into service, whichever occurs earlier, send one copy of articles, signed by the master and by each mariner, to the owner, charterer, or managing operator.

(2) The master or individual in charge must every 60 days send supplementary particulars of engagement covering each mariner engaged during this period, signed by the master and by each mariner, to the owner, charterer, or managing operator.

(3) The master or individual in charge must, at the close of the season, or once the vessel is withdrawn from service, whichever occurs later, send articles, signed by the master and by each mariner, to the owner, charterer, or managing operator.

* * * * *

§ 14.301 [Amended]

79. In § 14.301, remove the word ''shall'' wherever it appears and add, in its place, the word ''must''.

§ 14.303 [Amended]

80. In § 14.303, remove the words ''the master shall'' and add, in their place, the words ''the master must''; and remove the words ''the consular officer shall'' and add, in their place, the words ''the consular officer will''.

§ 14.305 [Amended]

81. In § 14.305, remove the word ''shall'' and add, in its place, the word ''must''.

82. Amend § 14.307 as follows:

a. Revise paragraph (a) to read as set down below; and

b. In paragraphs (b) through (e), remove the word ''shall'' wherever it appears and add, in its place, the word ''must''.

§ 14.307 Entries on certificate of discharge.

(a) Each master or individual in charge of a vessel must, for each merchant mariner being discharged from the vessel, prepare a certificate of discharge and two copies, whether by writing or typing them on the prescribed form with permanent ink or generating them from computer in the prescribed format, and must sign them with

permanent ink. The prescribed format for a certificate of discharge is the same as the current form CG–718A. The form has the mariner's printed name, signature, citizenship, MMD or MMC number, certification statement, date, master's signature, rate/rank the mariner is serving on the voyage, date and place of shipment, date and place of discharge, name of the vessel, name of the operating company, official number of the vessel, class of the vessel, and nature of the voyage.

* * * * *

§ 14.309 [Amended]

83. Amend § 14.309 as follows:

a. In paragraph (a) introductory text, remove the word ''shall'' and add, in its place, the word ''must'';

b. In paragraph (a)(3), after the word ''certificate'', add the words ''of discharge'';

c. In paragraph (a)(4), after the sentence ''Pay to each merchant mariner all wages due.'', add the sentence ''Instead of payment, a statement of wages due and when wages will be deposited or paid, in accordance with the provision in 46 U.S.C. 10313 and 46 U.S.C. 10504, may be provided.''; and

d. In paragraph (b), after the words ''When paid off'', add the words ''or provided a statement of wages due and when they will be paid, as indicated in paragraph (a)(4) of this section,''; and remove the word ''shall'' and add, in its place, the word ''must''.

§ 14.311 [Amended]

84. Amend § 14.311 as follows:

a. In paragraph (a), remove the word ''shall'' and add, in its place, the word ''must''; after the words ''certificates of discharge to'', remove the word ''an'' and add, in its place, the word ''the''; and remove the words ''which the shipping company may request from the National Maritime Center'' and add, in their place, the words ''provided by the Coast Guard in § 14.103 of this part''; and

b. In paragraph (b), remove the word ''shall'' wherever it appears and add, in its place, the word ''must''.

85. Amend § 14.313 as follows:

a. In paragraphs (a) and (b), remove the word ''shall'' wherever it appears and add, in its place, the word ''must'';

b. Redesignate paragraph (c) as paragraph (d); and

c. Add new paragraph (c) to read as follows:

§ 14.313 Storage of shipping articles and of certificates of discharge.

* * * * *

(c) Articles sent to the address in § 14.103(a) of this part for storage that are not prepared in accordance with paragraph (a) of this section may be returned to the shipping company for correction.

* * * * *

§ 14.403 [Amended]

86. Amend § 14.403 as follows:

a. In paragraph (a) introductory text, remove the words ''Department of Transportation'' and add, in their place, the words ''Department of Homeland Security''; and

b. In paragraph (a)(2), remove the word ''shall'' and add, in its place, the word ''must''.

§ 14.405 [Amended]

87. Amend § 14.405 as follows:

a. In paragraph (a) introductory text, remove the words ''OCMI of the Coast Guard'' and add, in their place, the words ''Coast Guard OCMI'';

b. In paragraph (c), remove the word ''OCMI'' wherever it appears; and remove the word ''shall'' and add, in its place, the word ''must''; and

c. In paragraph (d), before the word ''OCMI'', wherever it appears, add the words ''Coast Guard''; and remove the word ''shall'' and add, in its place, the word ''must''.

88. Amend § 14.407 as follows:

a. In paragraph (a), remove the words ''gross tons'' and add, in their place, the word ''GRT''; remove the word ''shall'' wherever it appears and add, in its place, the word ''must''; and after the words ''in the form of a copy of a certificate of discharge, or electronically'', add the words ''to the address provided in § 14.103 of this part'';

b. In paragraph (b), remove the word ''shall'' and add, in its place, the word ''must''; after the words ''a copy of each certificate'', add the words ''of discharge''; remove the words ''After January 3, 1997, the'' and add, in their place, the word ''The''; and after the words ''copies of certificates'', add the words ''of discharge'';

c. In paragraph (c), remove the word ''shall'' and add, in its place, the word ''must''; and after the words ''on a certificate'', add the words ''of discharge'';

d. Revise paragraph (d) to read as set down below;

e. In paragraph (e), remove the word ''shall'' and add, in its place, the word ''must''; and

f. Add new paragraph (f) to read as follows:

§ 14.407 Reports.

* * * * *

(d) Each oceanographic company must keep all original articles and copies of all certificates of discharge for 3 years. After 3 years the company must prepare the original shipping articles in alphabetical order by vessel name and send to the address in § 14.103(a) of this part for storage at the Federal Records Center at Suitland, Maryland. The company may dispose of the copies of certificates of discharge. The Coast Guard will dispose of copies of certificates submitted manually, once the data is entered into its sea-service database and are validated.

* * * * *

(f) Articles sent to the address in § 14.103(a) of this part for storage that are not prepared in accordance with paragraph (d) of this section may be returned to the company for correction.

PART 15—MANNING REQUIREMENTS

89. The authority citation for part 15 continues to read as follows:

Authority: 44 U.S.C. 3507; 46 U.S.C. 2101, 2103, 3306, 3703, 8101, 8102, 8104, 8105, 8301, 8304, 8502, 8503, 8701, 8702, 8901, 8902, 8903, 8904, 8905(b), 8906, 9102, and 8103; and Department of Homeland Security Delegation No. 0170.1.

§ 15.101 [Amended]

90. In § 15.101, remove the words ''the regulations in''; and remove the words ''parts E & F,''.

91. Revise § 15.103 to read as follows:

§ 15.103 Incorporation by reference.

(a) Certain material is incorporated by reference into this part with the approval of the Director of the Federal Register under 5 U.S.C. 552(a) and 1 CFR part 51. To enforce any edition other than that specified in this section, the Coast Guard must publish notice of change in the **Federal Register** and the material must be available to the public. All approved material is available for inspection at the National Archives and Records Administration (NARA). For information on the availability of this material at NARA, call 202–741–6030, or go to *http://www.archives.gov/federal_register/code_of_federal_regulations/ibr_locations.html.* Also, it is available for inspection at the Coast Guard, Office of Operating and Environmental Standards (CG–522), 2100 2nd St. SW., Stop 7126, Washington, DC 20593–7126, 202–372–1405, and is available from the sources indicated below.

(b) International Maritime Organization (IMO), 4 Albert Embankment, London, SE1 7SR England:

(1) The International Convention on Standards of Training, Certification and Watchkeeping for Seafarers, 1978, as amended (STCW Convention),

incorporation by reference approved for §§ 15.103, 15.403, 15.404, 15.1101, 15.1103, 15.1105, and 15.1109.

(2) The Seafarer's Training, Certification and Watchkeeping Code, as amended (STCW Code), incorporation by reference approved for § 15.1109.

(3) The International Convention for the Safety of Life at Sea, 1974 (SOLAS), approved for incorporation by reference in §§ 15.818 and 15.1103.

(c) International Labour Organization (ILO), 4 route des Morillons, CH–1211 Genève 22, Switzerland:

(1) Officers Competency Certificates Convention, 1936, incorporation by reference approved for §§ 15.701 and 15.705; and

(2) [Reserved]

92. Revise § 15.105 to read as follows:

§ 15.105 General.

(a) The regulations in this part apply to all vessels that are subject to the manning requirements contained in the navigation and shipping laws of the United States, including uninspected vessels (46 U.S.C. 7101–9308).

(b) The navigation and shipping laws state that a vessel may not be operated unless certain manning requirements are met. In addition to establishing a minimum number of officers and rated crew to be carried onboard certain vessels, they establish minimum qualifications concerning licenses and MMC endorsements, citizenship, and conditions of employment. It is the responsibility of the owner, charterer, managing operator, master, or person in charge or in command of the vessel to ensure that appropriate personnel are carried to meet the requirements of the applicable navigation and shipping laws and regulations.

(c) Inspected vessels are issued a Certificate of Inspection (COI) which indicates the minimum complement of officers and crew (including lifeboatmen) considered necessary for safe operation. The COI complements the statutory requirements but does not supersede them.

(d) Uninspected vessels operating on an international voyage may be issued a safe manning certificate indicating the minimum complement of qualified mariners necessary for safe operation.

(e) The regulations in subpart K of this part apply to seagoing vessels subject to the International Convention on Standards of Training, Certification and Watchkeeping for Seafarers, 1978, as amended (STCW).

(f) Neither any person serving on any of the following vessels, nor any owner or operator of any of these vessels, need meet the requirements of subpart K of this part, because the vessels are exempt from application of STCW:

(1) Fishing vessels as defined in 46 U.S.C. 2101(11)(a).

(2) Fishing vessels used as fish-tender vessels as defined in 46 U.S.C. 2101(11)(c).

(3) Barges as defined in 46 U.S.C. 102, including non-self-propelled mobile offshore drilling units.

(4) Vessels operating exclusively on the Great Lakes or on the inland waters of the U.S. in the Straits of Juan de Fuca or on the Inside Passage between Puget Sound and Cape Spencer.

(g) Owners and operators, and personnel serving on the following small vessels engaged exclusively on domestic, near-coastal voyages are in compliance with subpart K of this part and are, therefore, not subject to further requirements for the purposes of the STCW Convention:

(1) Small passenger vessels subject to subchapter T or K of title 46 CFR.

(2) Vessels of less than 200 GRT/500 GT, other than passenger vessels subject to subchapter H of title 46 CFR.

(3) Uninspected passenger vessels (UPVs) as defined in 46 U.S.C. 2101(42)(B).

(h) Personnel serving on vessels identified in paragraphs (g)(1) and (g)(2) of this section may be issued, without additional proof of qualification, an appropriate STCW endorsement on their license or MMC when the Coast Guard determines that such an endorsement is necessary to enable the vessel to engage on a single international voyage of a non-routine nature. The STCW endorsement will be expressly limited to service on the vessel or the class of vessels and will not establish qualification for any other purpose.

Subpart C [Redesignated as subpart D and revised]

Subpart C through J [Redesignated as subpart D through K]

93. Redesignate subparts C through J as subparts D through K.

Subpart C [Reserved]

94. Reserve subpart C.

95 Revise newly redesignated subpart D to read as follows:

Subpart D—Manning Requirements; All Vessels

Sec.

15.401 Employment and service within restrictions of credential.
15.403 When credentials for ratings are required.
15.404 Requirements for serving onboard a vessel.
15.405 Familiarity with vessel characteristics.
15.410 Credentialed individuals for assistance towing vessels.
15.415 [Reserved]

§ 15.401 Employment and service within restrictions of credential.

(a) A person may not employ or engage an individual, and an individual may not serve, in a position in which an individual is required by law or regulation to hold a license, certificate of registry, Merchant Mariner's Document (MMD), Transportation Worker Identification Credential (TWIC) and/or Merchant Mariner Credential (MMC), unless the individual holds all credentials required, as appropriate, authorizing service in the capacity in which the individual is engaged or employed, and the individual serves within any restrictions placed on the credential. An individual holding an active license, certificate of registry, MMD, or MMC issued by the Coast Guard must also hold a valid TWIC issued by the Transportation Security Administration under 49 CFR part 1572.

(b) A person may not employ or engage an individual, and an individual may not serve in a position in which it is required by law or regulation that the individual hold an MMC endorsed with a domestic endorsement, as well as a corresponding STCW endorsement for service outside the boundary line.

(c) A person may not employ or engage an individual unless that individual maintains a current medical certificate/endorsement. Medical certificates/endorsements must be issued and will remain current for the following periods of time, unless otherwise noted on the certificate/endorsement:

(1) Two years for individuals serving on vessels to which STCW applies;

(2) Twelve months for individuals serving as a first-class pilot or those individuals serving as pilots on vessels of 1,600 GRT/3,000 GT or more under § 15.812 of this part; or

(3) Five years for all other mariners.

(d) Each individual referred to in paragraph (a) of this section must hold an MMD or MMC that serves as identification, with an appropriate endorsement for the position in which the seaman serves, and the MMD or MMC must be presented to the master of the vessel at the time of employment or before signing Articles of Agreement.

(e) Each individual below the grades of officer and staff officer employed on any U.S. flag merchant vessel of 100 GRT or more must possess a valid MMD or MMC issued by the Coast Guard, except as noted below:

(1) Mariners on vessels navigating exclusively on rivers and lakes, except

the Great Lakes, as defined in § 10.107 of this subchapter;

(2) Mariners below the rank of licensed officer employed on any non-self-propelled vessel, except seagoing barges and certain tank barges; or

(3) Personnel not designated with any safety or security duties onboard casino vessels.

(f) Every person employed on a vessel with dual tonnages (both domestic and international) must hold a credential authorizing service appropriate to the tonnage scheme under which the vessel is manned and operating.

§ 15.403 When credentials for ratings are required.

(a) Every seaman referred to in this section, when required, must produce a valid MMC or MMD with all applicable rating endorsements for the position sought, and a valid TWIC, to the master of the vessel at the time of his or her employment before signing Articles of Agreement. Seamen who do not possess one of these credentials may be employed at a foreign port or place within the limitations specified in § 15.720 of this part.

(b)(1) Every person below the grades of officer and staff officer employed on any U.S. flag merchant vessel of 100 GRT or more, except those navigating rivers exclusively and the smaller inland lakes, must possess a valid MMC or MMD with all appropriate endorsements for the positions served.

(2) No endorsements are required of any person below the rank of officer employed on any barges except seagoing barges and certain tank barges.

(3) No endorsements are required of any person below the rank of officer employed on any sail vessel of less than 500 net tons while not carrying passengers for hire and while not operating outside the line dividing inland waters from the high seas. 33 U.S.C. 151.

(c) Each person serving as an able seafarer-deck, or a Ratings Forming Part of a Navigational Watch (RFPNW) on a seagoing vessel of 200 GRT/500 GT or more must hold an STCW endorsement certifying him or her as qualified to perform the navigational function at the support level, in accordance with the STCW Convention (incorporated by reference, see § 15.103 of this part).

(d) Each person serving as an able seafarer-engine, or a Ratings Forming Part of an Engineering Watch (RFPEW), on a seagoing vessel driven by main propulsion machinery of 1,000 HP/750 kW propulsion power or more, must hold an STCW endorsement certifying him or her as qualified to perform the marine-engineering function at the support level, in accordance with the STCW Convention.

(e) Notwithstanding any other rule in this part, no person subject to this part serving on any of the following vessels needs an STCW endorsement:

(1) Vessels exempted from the application of the STCW Convention, including:

(i) Fishing vessels as defined in 46 U.S.C. 2101(11)(a);

(ii) Fishing vessels used as fish-tender vessels as defined in 46 U.S.C. 2101(11)(c);

(iii) Barges as defined in 46 U.S.C. 102, including non-self-propelled mobile offshore-drilling units; or

(iv) Vessels operating exclusively on the Great Lakes.

(2) Vessels not subject to further obligation under the STCW Convention due to their special operating conditions as small vessels engaged in domestic, near-coastal voyages, including:

(i) Small passenger vessels subject to subchapter T or K of title 46 CFR;

(ii) Vessels of less than 200 GRT/500 GT (other than passenger vessels subject to subchapter H of title 46 CFR); or

(iii) Uninspected passenger vessels as defined in 46 U.S.C. 2101(42)(B).

§ 15.404 Requirements for serving onboard a vessel.

(a) *Ratings Forming Part of a Navigational Watch (RFPNW).* Each person serving as an RFPNW on a seagoing vessel of 200 GRT/500 GT or more, subject to the STCW Convention (incorporated by reference, see § 15.103 of this part), must hold an STCW endorsement attesting to his or her qualifications to perform the navigational function at the support level.

(b) *Able Seaman.* Each person serving as a rating as able seaman on a U.S. flag vessel must hold an MMC endorsed as able seaman, except that no credential as able seaman is required of any person employed on any tug or towboat on the bays and sounds connected directly with the seas, or on any barges except seagoing barges or tank barges. Persons serving on vessels subject to the STCW Convention must also hold an STCW endorsement as able seafarer-deck.

(c) *Ratings Forming Part of an Engineering Watch (RFPEW).* Each person serving as an RFPEW in a manned engine room or designated to perform duties in a periodically unmanned engine room, on a seagoing vessel driven by main propulsion machinery of 1,000 HP/750 kW propulsion power or more, must hold an STCW endorsement attesting to his or her qualifications to perform the marine-engineering function at the support level.

(d) *Qualified Member of the Engineer Department (QMED).* (1) The holder of an MMD or MMC endorsed with one or more QMED ratings may serve in any unqualified rating in the engine department without obtaining an additional endorsement.

(2) A QMED may serve as a qualified rating in the engineering department only in the specific ratings endorsed on his or her MMD or MMC.

(3) Persons serving on vessels subject to the STCW Convention must also hold an STCW endorsement as able seafarer-engine.

(e) Lifeboatman. Every person assigned duties as a lifeboatman must hold a credential attesting to such proficiency. Persons serving on vessels subject to the STCW Convention must also hold an STCW endorsement in proficiency in survival craft and rescue boats other than fast rescue boats (PSC).

(f) *Lifeboatman-Limited.* Every person assigned duties onboard a vessel that is not required to carry lifeboats and is required to employ a lifeboatman must hold an endorsement as either lifeboatman or lifeboatman-limited. Persons serving on vessels subject to the STCW Convention must also hold an STCW endorsement in proficiency in survival craft and rescue boats other than lifeboats and fast rescue boats—limited (PSC—limited).

(g) *Fast Rescue Boats.* Every person engaged or employed in a position requiring proficiency in fast rescue boats must hold an endorsement attesting to such proficiency.

(h) *Entry Level.* Every person employed in a rating other than able seaman or QMED on a U.S. flag vessel on which MMCs are required must hold an MMD or MMC endorsed as wiper, ordinary seaman, steward's department, or steward's department (F.H.).

(i) *Person in charge of medical care.* Every person designated to take charge of medical care must hold an MMD or MMC endorsed as person in charge of medical care.

(j) *Medical first-aid provider.* Every person designated to provide medical first aid onboard a ship must hold an MMD or MMC endorsed as medical first-aid provider or a deck or an engineer officer endorsement.

(k) *GMDSS radio operator or maintainer.* Every person responsible for the operation or shipboard maintenance of GMDSS radio equipment must hold an MMD or MMC endorsed as GMDSS radio operator or GMDSS radio maintainer, as appropriate.

§ 15.405 Familiarity with vessel characteristics.

Each credentialed crewmember must become familiar with the relevant characteristics of the vessel on which he or she is engaged prior to assuming his or her duties. As appropriate, these include, but are not limited to: general arrangement of the vessel; maneuvering characteristics; proper operation of the installed navigation equipment; proper operation of firefighting and lifesaving equipment; stability and loading characteristics; emergency duties; and main propulsion and auxiliary machinery, including steering gear systems and controls.

§ 15.410 Credentialed individuals for assistance towing vessels.

Every assistance towing vessel must be under the direction and control of an individual holding a license or MMC authorizing him or her to engage in assistance towing under the provisions of § 11.482 of this subchapter.

§ 15.415 [Reserved]

§ 15.505 [Amended]

96. In § 15.505, remove the words ''changes in manning as indicated'' and add, in their place, the words ''changes to the manning required''; and remove the words ''certificate of inspection'', wherever they appear, and add, in their place, the word ''COI''.

97. Revise § 15.515 to read as follows:

§ 15.515 Compliance with certificate of inspection.

(a) Except as provided by § 15.725 of this part, no vessel may be navigated unless it has in its service and onboard the crew complement required by the COI.

(b) Any time passengers are embarked on a passenger vessel, the vessel must have the crew complement required by the COI, whether the vessel is underway, at anchor, made fast to shore, or aground. However, the master may allow reduced crew for limited or special operating conditions subject to the approval of the OCMI.

(c) No vessel subject to inspection under 46 U.S.C. 3301 will be navigated unless it is under the direction and control of an individual who holds an appropriate license or officer endorsement on his or her MMC.

98. Revise § 15.520 to read as follows:

§ 15.520 Mobile offshore drilling units (MODUs).

(a) The requirements in this section for MODUs supplement other requirements in this part.

(b) The OCMI determines the minimum number of officers and crew (including lifeboatmen) required for the safe operation of inspected MODUs. In addition to other factors listed in this part, the specialized nature of the MODU is considered in determining the specific manning levels.

(c) A license or officer endorsement on an MMC as offshore installation manager (OIM), barge supervisor (BS), or ballast control operator (BCO) authorizes service only on MODUs. A license or endorsement as OIM is restricted to the MODU type and mode of operation specified on the credential.

(d) A self-propelled MODU, other than a drillship, when underway must be under the command of an individual who holds a license as master endorsed as OIM or MMC endorsed as master and OIM. When not underway, such a vessel must be under the command of an individual holding the appropriate OIM credential.

(e) A drillship must be under the command of an individual who holds a license or MMC officer endorsement as master. When a drillship is on location, the individual in command must hold a license as master endorsed as OIM or an MMC with master and OIM officer endorsements.

(f) A non-self-propelled MODU must be under the command of an individual who holds a license or MMC officer or endorsement as OIM.

(g) An individual serving as mate on a self-propelled surface unit, other than a drillship, when underway must hold an appropriate license or MMC endorsed as mate and BS or BCO. When not underway, such a vessel may substitute an individual holding the appropriate BS or BCO endorsement for the mate, if permitted by the cognizant OCMI.

(h) An individual holding a license or MMC officer endorsement as BS is required on a non-self-propelled surface unit other than a drillship.

(i) An individual holding a license or MMC officer endorsement as BS may serve as BCO.

(j) The OCMI issuing the MODU's COI may authorize the substitution of chief or assistant engineer (MODU) for chief or assistant engineer, respectively, on self-propelled or propulsion-assisted surface units, except drillships. The OCMI may also authorize the substitution of assistant engineer (MODU) for assistant engineer on drillships.

(k) Requirements in this part concerning radar observers do not apply to non-self-propelled MODUs.

(l) A surface MODU underway or on location, when afloat and equipped with a ballast control room, must have that ballast control room manned by an individual holding a license or MMC officer endorsement authorizing service as BCO.

99. Revise the heading in § 15.525 to read as follows:

§ 15.525 Additional manning requirements for tank vessels.

* * * * *

100. Revise § 15.530 to read as follows:

§ 15.530 Large passenger vessels.

(a) The owner or operator of a U.S. flag large passenger vessel must ensure that any non-resident alien holding a Coast Guard-issued MMC described in part 12, subpart H of this subchapter is provided the rights, protections, and benefits of the International Labor Organization's Merchant Shipping (Minimum Standards) Convention of 1976.

(b) On U.S. flag large passenger vessels, non-resident aliens holding a Coast Guard-issued MMC described in part 12, subpart H of this subchapter:

(1) May only be employed in the steward's department on the vessel(s) specified on the MMC or accompanying Coast Guard letter under § 12.811 of this subchapter;

(2) May only be employed for an aggregate period of 36 months actual service on all authorized U.S. flag large passenger vessels combined, under § 12.811 of this subchapter;

(3) May not perform watchstanding, engine room duty watch, or vessel navigation functions, under § 12.811 of this subchapter; and

(4) May perform emergency-related duties only if, under § 12.811 of this subchapter:

(i) The emergency-related duties do not require any other rating or endorsement, except lifeboatman as specified in § 12.811 of this subchapter;

(ii) The non-resident alien has completed familiarization and basic safety training, as required in § 15.1105 of this part;

(iii) That if the non-resident alien serves as a lifeboatman, he or she must have the necessary lifeboatman's endorsement; and

(iv) The non-resident alien has completed the training for crewmembers on passenger ships performing duties involving safety or care for passengers, as required in part 12, subpart H of this subchapter.

(c) No more than 25 percent of the total number of ratings on a U.S. flag large passenger vessel may be aliens, whether admitted to the United States for permanent residence or authorized for employment in the United States as non-resident aliens.

(d) The owner or operator of a U.S. flag large passenger vessel employing non-resident aliens holding Coast Guard-issued MMCs described in part 12, subpart H of this subchapter must:

(1) Retain custody of all non-resident alien MMCs for the duration of employment, under § 12.811 of this subchapter; and

(2) Return all non-resident alien MMCs to the Coast Guard upon termination of employment, under § 12.811 of this subchapter.

(e) The owner or operator of a U.S. flag large passenger vessel employing non-resident aliens holding Coast Guard-issued MMCs described in part 12, subpart H of this subchapter is subject to the civil penalty provisions specified in 46 U.S.C. 8103(f), for any violation of this section.

101. Revise § 15.605 to read as follows:

§ 15.605 Credentialed operators for uninspected passenger vessels.

Each uninspected passenger vessel (UPV) must be under the direction and control of an individual credentialed by the Coast Guard, as follows:

(a) Every UPV of 100 GRT or more, as defined by 46 U.S.C. 2101(42)(A), must be under the command of an individual holding a license or MMC endorsed as master. When navigated, it must be under the direction and control of a credentialed master, pilot, or mate.

(b) Every self-propelled UPV as defined by 46 U.S.C. 2101(42)(B) must be under the direction and control of an individual holding a license or MMC endorsed as or equivalent to an operator of an uninspected passenger vessel (OUPV).

(c) Personnel serving on UPVs engaged on international voyages must meet the requirements of subpart K of this part.

102. Amend § 15.610 as follows:

a. Revise paragraphs (a) and (b)(1) to read as set down below;

b. In paragraph (b) introductory text, after the words ''endorsement for that route'', remove the symbol '','' and add, in its place, the word ''or''; after the words ''for the Western Rivers, or'', add the word ''who''; and after the words ''meets the requirements of paragraph (a)'', add the words ''of this section''; and

c. In paragraph (b)(2), after the words ''during hours of darkness, and'', add the words ''provide evidence of''; and remove the words ''round trip of the 12'' and add, in their place, the words ''of the four round trips''.

§ 15.610 Master and mate (pilot) of towing vessels.

(a) Except as provided in this paragraph, every towing vessel of at least 8 meters (at least 26 feet) in length, measured from end to end over the deck (excluding sheer), must be under the direction and control of a person holding a license or MMC officer endorsement as master or mate (pilot) of towing vessels, or as master or mate of vessels of greater than 200 GRT/500 GT, holding either an endorsement on his or her license or MMC for towing vessels or a completed Towing Officer Assessment Record (TOAR) signed by a designated examiner indicating that the officer is proficient in the operation of towing vessels. This requirement does not apply to any vessel engaged in assistance towing, nor does it apply to any towing vessel of less than 200 GRT/500 GT if the vessel is going to or coming from equipment or a site that is exploiting offshore minerals or oil.

(b) * * *

(1) To operate a towing vessel with tank barges, or a tow of barges carrying hazardous materials regulated under subchapter N or O of this chapter, an officer in charge of the towing vessel must have completed 12 round trips over this route as an observer, with at least three of those trips during hours of darkness, and provide evidence of at least one of the 12 round trips completed within the last 5 years.

* * * * *

§ 15.701 [Amended]

103. Amend § 15.701 as follows:

a. In paragraph (a) introductory text, after the number ''1936'', add the words ''(incorporated by reference, see § 15.103 of this part)'';

b. In paragraph (a)(4), remove the words ''gross tons'' and add, in their place, the words ''GRT/500 GT'';

c. In paragraph (b), remove the word ''chapter'' and add, in its place, the word ''subchapter''; and

d. In paragraph (d), remove the word ''five'' and add, in its place, the number ''5''.

104. Amend § 15.705 as follows:

a. In paragraph (a), remove the words ''is the law applicable'' and add, in their place, the word ''applies''; remove the word ''watch'' in the third sentence and add, in its place, the word ''''watch''''; and remove the words ''certificate of inspection'' and add, in their place, the word ''COI'';

b. Revise paragraph (b) to read as set down below;

c. In paragraph (c)(2), after the word ''or'', remove the symbol '','';

d. In paragraph (d), remove the words ''26 feet'' and add, in their place, the words ''8 meters (26 feet)''; between the number ''24'' and the word ''hour'', add the symbol ''-''; and after the number ''1936'', add the words ''(incorporated by reference, see § 15.103 of this part)'';

e. Revise paragraph (e) to read as follows;

f. In paragraph (f), remove the words ''gross tons'' and add, in their place, the word ''GRT'';

g. In paragraph (f)(1), after the words ''remainder of that 24-hour period'' add the symbol '',''; and

h. In paragraph (f)(2), after the words ''in any 24-hour period'' add the symbol '',''.

§ 15.705 Watches.

* * * * *

(b) Subject to exceptions, 46 U.S.C. 8104 requires that when a master of a seagoing vessel of more than 100 GRT establishes watches for the officers, sailors, coal passers, firemen, oilers, and watertenders, ''the personnel shall be divided, when at sea, into at least three watches and shall be kept on duty successively to perform ordinary work incidental to the operation and management of the vessel.'' The Coast Guard interprets ''sailors'' to mean those members of the deck department other than officers, whose duties involve the mechanics of conducting the ship on its voyage, such as helmsman (wheelsman), lookout, etc., and which are necessary to the maintenance of a continuous watch. The term ''sailors'' is not interpreted to include able seamen and ordinary seamen not performing these duties.

* * * * *

(e) Fish processing vessels are subject to various provisions of 46 U.S.C. 8104 concerning watches, including:

(1) For fish processing vessels that entered into service before January 1, 1988, the following watch requirements apply to the officers and deck crew:

(i) If more than 5,000 GRT—three watches;

(ii) If more than 1,600 GRT/3,000 GT and not more than 5,000 GRT—two watches; and

(iii) If not more than 1,600 GRT/3,000 GT—no watch division specified.

(2) For fish processing vessels that entered into service after December 31, 1987, the following watch requirements apply to the officers and deck crew:

(i) If more than 5,000 GRT—three watches;

(ii) If not more than 5,000 GRT and having more than 16 individuals onboard, primarily employed in the preparation of fish or fish products—two watches; and

(iii) If not more than 5,000 GRT and having not more than 16 individuals onboard, primarily employed in the

preparation of fish or fish products—no watch division specified.

* * * * *

§ 15.710 [Amended]

105. In § 15.710, remove the words ''on board'' and add, in their place, the word ''onboard''.

106. Amend § 15.720 as follows:

a. Revise the heading of § 15.720 to read as set down below; and

b. In paragraph (d), remove the word ''shall'' and add, in its place, the word ''must''; remove the words ''which is equivalent in'' and add, in their place, the words ''that required''; and after the words ''other qualifications'', add the word ''equivalent''.

§ 15.720 Use of non-U.S.-credentialed personnel.

* * * * *

§ 15.725 [Amended]

107. In § 15.725, remove the words ''Officer in Charge, Marine Inspection'' and add, in their place, the word ''OCMI''; and remove the word ''twelve'' and add, in its place, the number ''12''.

§ 15.730 [Amended]

108. Amend § 15.730 as follows:

a. In paragraph (a) introductory text, remove the words ''gross tons'' and add, in their place, the word ''GRT'';

b. In paragraph (a)(1), after the words ''and lakes'', remove the punctuation ''('' and after the word ''Lakes'', remove the punctuation ''))'';

c. In paragraph (a)(2), after the words ''manned barge'', remove the punctuation ''('' and after the word ''applies'', remove the punctuation ''))'';

d. In paragraph (a)(6), remove the words ''1600 gross tons'' and add, in their place, the words ''1,600 GRT/3,000 GT''; remove the word ''enters'' and add, in its place, the word ''entered''; and remove the words ''on board'' and add, in their place, the word ''onboard''; and

e. In paragraph (b), remove the words ''on board'' wherever they appear and add, in their place, the word ''onboard''.

109. Amend § 15.805 as follows:

a. In paragraph (a) introductory text, remove the second instance of the word ''master'';

b. In paragraph (a)(1), remove the words ''gross tons'' and add, in their place, the words ''GRT/500 GT'';

c. In paragraphs (a)(2) and (a)(3), after the word ''vessel'', remove the character ''.'' and add, in its place, the character '';'';

d. In paragraph (a)(5) introductory text, before the words ''26 feet'' remove the words ''at least''; remove the words ''under the'' and add, in their place, the word ''in''; and remove the words ''gross register tons (GRT)'' and add, in their place, the words ''GRT/500 GT'';

e. In paragraph (a)(5)(ii), remove the words ''with officer endorsement for'' and add, in their place, the words ''endorsed for master of'';

f. In paragraph (a)(6), remove the words ''gross tons.'' and add, in their place, the word ''GRT; and''; and

g. Add new paragraph (a)(7) to read as follows:

§ 15.805 Master.

(a) * * *

(7) Every uninspected passenger vessel engaged on an international voyage.

§ 15.810 [Amended]

110. Amend § 15.810 as follows:

a. In paragraphs (b)(1) and (b)(2), remove the words ''1000 gross tons'' and add, in their place, the words ''1,000 GRT'';

b. In paragraph (b)(3), remove the words ''100 or more gross tons'' and add, in their place, the words ''100 GRT or more''; remove the words ''1000 gross tons'' and add, in their place, the words ''1,000 GRT''; and remove the words ''200 gross tons'' and add, in their place, the words ''200 GRT/500 GT'';

c. In paragraphs (b)(4) and (b)(5), remove the words ''100 gross tons'' and add, in their place, the words ''100 GRT'';

d. In paragraph (c), remove the words ''200 gross tons'' and add, in their place, the words ''200 GRT/500 GT'';

e. In paragraph (d) introductory text, before the words ''26 feet'' remove the words ''at least'';

f. In paragraph (d)(2), after the words ''200 GRT'', add the words ''/500 GT''; and

g. In paragraph (d)(2)(i), remove the words ''Towing Officer's Assessment Record (TOAR)'' and add, in their place, the word ''TOAR''.

111. Revise § 15.812 to read as follows:

§ 15.812 Pilots.

(a) Except as specified in paragraph (f) of this section, the following vessels, not sailing on register, when underway on the navigable waters of the United States, must be under the direction and control of an individual qualified to serve as pilot under paragraph (b) or (c) of this section, as appropriate:

(1) Coastwise seagoing vessels propelled by machinery and subject to inspection under 46 U.S.C. Chapter 33, and coastwise seagoing tank barges subject to inspection under 46 U.S.C. Chapter 37;

(2) Vessels that are not authorized by their COI to proceed beyond the Boundary Line established in part 7 of this chapter, and are in excess of 1,600 GRT/3,000 GT propelled by machinery, and subject to inspection under 46 U.S.C. chapter 33; and

(3) Vessels operating on the Great Lakes, that are propelled by machinery and subject to inspection under 46 U.S.C. Chapter 33, or are tank barges subject to inspection under 46 U.S.C. chapter 37.

(b) The following individuals may serve as a pilot on a vessel subject to paragraph (a) of this section, when underway on the navigable waters of the United States that are designated areas:

(1) An individual holding a valid first-class pilot's license or MMC officer endorsement as first-class pilot, operating within the restrictions of his or her credential, may serve as pilot on any vessel to which this section applies.

(2) An individual holding a valid license or MMC officer endorsement as master or mate, employed aboard a vessel within the restrictions of his or her credential, may serve as pilot on a vessel of not more than 1,600 GRT/3,000 GT propelled by machinery, described in paragraphs (a)(1) and (a)(3) of this section, provided he or she:

(i) Is at least 21 years old;

(ii) Is able to show current knowledge of the waters to be navigated, as required in § 11.713 of this subchapter;

(iii) Provide evidence of completing a minimum of four round trips over the route to be traversed while in the wheelhouse as watchstander or observer. At least one of the round trips must be made during the hours of darkness if the route is to be traversed during darkness; and

(iv) Has a current physical examination in accordance with the provisions of § 11.709 of this subchapter.

(3) An individual holding a valid license or MMC officer endorsement as master, mate, or operator employed aboard a vessel within the restrictions of his or her credential, may serve as pilot on a tank barge or tank barges totaling not more than 10,000 GRT/GT, described in paragraphs (a)(1) and (a)(3) of this section, provided he or she:

(i) Is at least 21 years old;

(ii) Is able to show current knowledge of the waters to be navigated, as required in § 11.713 of this subchapter;

(iii) Has a current physical examination in accordance with the provisions of § 11.709 of this subchapter;

(iv) Has at least 6 months of service in the deck department on towing vessels engaged in towing operations; and

(v) Provides evidence of completing a minimum of 12 round trips over the route to be traversed, as an observer or under instruction in the wheelhouse. At least three of the round trips must be made during the hours of darkness if the route is to be traversed during darkness.

(c) An individual holding a valid license or MMC officer endorsement as master, mate, or operator, employed aboard a vessel within the restrictions of his or her credential, may serve as a pilot for a vessel subject to paragraphs (a)(1) and (a)(2) of this section, when underway on the navigable waters of the United States that are not designated areas of pilotage waters, provided he or she:

(1) Is at least 21 years old;

(2) Is able to show current knowledge of the waters to be navigated, as required in § 11.713 of this subchapter; and

(3) Has a current physical examination in accordance with the provisions of § 11.709 of this subchapter.

(d) In any instance when the qualifications of a person satisfying the requirements for pilotage through the provisions of this subpart are questioned by the Coast Guard, the individual must, within a reasonable time, provide the Coast Guard with documentation proving compliance with the applicable portions of paragraphs (b) and (c) of this section.

(e) Federal pilotage requirements contained in paragraphs (a) through (d) of this section are summarized in two quick reference tables:

(1) Table 15.812(e)(1) provides a guide to the pilotage requirements for inspected, self-propelled vessels.

TABLE 15.812(e)(1)—QUICK REFERENCE TABLE FOR FEDERAL PILOTAGE REQUIREMENTS FOR U.S.-INSPECTED, SELF-PROPELLED VESSELS, NOT SAILING ON REGISTER

	Designated areas of pilotage waters (routes for which first-class pilot's licenses or MMC officer endorsements are issued)	Non-designated areas of pilotage waters (between the 3-mile line and the start of traditional pilotage routes)
Inspected self-propelled vessels greater than 1,600 GRT, authorized by their COI to proceed beyond the Boundary Line, operating on the Great Lakes.	First-Class Pilot	Master or Mate may serve as pilot if he or she: 1. Is at least 21 years old; 2. Has an annual physical exam; and 3. Maintains current knowledge of the waters to be navigated.[1]
Inspected self-propelled vessels not more than 1,600 GRT, authorized by their COI to proceed beyond the Boundary Line, or operating on the Great Lakes.	First-Class Pilot, or Master or Mate may serve as pilot if he or she: 1. Is at least 21 years old; 2. Maintains current knowledge of the waters to be navigated; and [1] 3. Has four round trips over the route.[2]	Master or Mate may serve as pilot if he or she: 1. Is at least 21 years old; 2. Has an annual physical exam; and 3. Maintains current knowledge of the waters to be navigated.[1]
Inspected self-propelled vessels greater than 1,600 GRT, not authorized by their COI to proceed beyond the Boundary Line (inland route vessels); other than vessels operating on the Great Lakes.	First-Class Pilot	Master or Mate may serve as pilot if he or she: 1. Is at least 21 years old; 2. Has an annual physical exam; and 3. Maintains current knowledge of the waters to be navigated.[1]
Inspected self-propelled vessels not more than 1,600 GRT, not authorized by their COI to proceed beyond the Boundary Line (inland route vessels); other than vessels operating on the Great Lakes.	No pilotage requirement	No pilotage requirement.

[1] One round trip within the past 60 months.
[2] If the route is to be traversed during darkness, one of the four round trips must be made during darkness.

(2) Table 15.812(e)(2) provides a guide to the pilotage requirements for tank barges.

TABLE 15.812(e)(2)—QUICK REFERENCE TABLE FOR FEDERAL PILOTAGE REQUIREMENTS FOR U.S.-INSPECTED TANK BARGES, NOT SAILING ON REGISTER

	Designated areas of pilotage waters (routes for which first-class pilot's licenses or MMC officer endorsements are issued)	Non-designated areas of pilotage waters (between the 3-mile line and the start of traditional pilotage routes)
Tank Barges greater than 10,000 GRT/GT, authorized by their COI to proceed beyond the Boundary Line, or operating on the Great Lakes.	First-Class Pilot	Master, Mate, or Master, Mate (Pilot) of towing vessels may serve as pilot if he or she: 1. Is at least 21 years old; 2. Has an annual physical exam; [1] 3. Maintains current knowledge of the waters to be navigated; and [2] 4. Has at least 6 months' service in the deck department on towing vessels engaged in towing.

TABLE 15.812(e)(2)—QUICK REFERENCE TABLE FOR FEDERAL PILOTAGE REQUIREMENTS FOR U.S.-INSPECTED TANK BARGES, NOT SAILING ON REGISTER—Continued

	Designated areas of pilotage waters (routes for which first-class pilot's licenses or MMC officer endorsements are issued)	Non-designated areas of pilotage waters (between the 3-mile line and the start of traditional pilotage routes)
Tank Barges 10,000 GRT/GT or less, authorized by their COI to proceed beyond the Boundary Line, or operating on the Great Lakes.	First-Class Pilot, or Master, Mate, or Master, Mate (Pilot) of towing vessels may serve as pilot if he or she: 1. Is at least 21 years old; 2. Has an annual physical exam; [1] 3. Maintains current knowledge of the waters to be navigated; [2] 4. Has at least 6 months' service in the deck department on towing vessels engaged in towing operations; and 5. Has 12 round trips over the route.[3]	Master, Mate, or Master, Mate (Pilot) of towing vessels may serve as pilot if he or she: 1. Is at least 21 years old; 2. Has an annual physical exam; [1] 3. Maintains current knowledge of the waters to be navigated; and [2] 4. Has at least 6 months' service in the deck department on towing vessels engaged in towing operations.
Tank Barges authorized by their COI for inland routes only (lakes, bays, and sounds/rivers); other than vessels operating on the Great Lakes.	No pilotage requirement	No pilotage requirement.

[1] Annual physical exam does not apply to an individual who will serve as a pilot of a tank barge of less than 1,600 GRT.
[2] One round trip within the past 60 months.
[3] If the route is to be traversed during darkness, three of the 12 round trips must be made during darkness.

(f) In Prince William Sound, Alaska, coastwise seagoing vessels over 1,600 GRT and propelled by machinery and subject to inspection under 46 U.S.C. Chapter 37 must:

(1) When operating from 60°49′ north latitude to the Port of Valdez, be under the direction and control of an individual holding a valid license or MMC endorsed as pilot who:

(i) Is operating under the authority of a license or MMC;

(ii) Holds a license issued by the State of Alaska; and

(iii) Is not a crewmember of the vessel.

(2) Navigate with either two credentialed deck officers on the bridge or an individual holding a valid license or MMC endorsed as pilot, when operating south of 60°49′ north latitude and in the approaches through Hinchinbrook Entrance and in the area bounded:

(i) On the West by a line 1 mile west of the western boundary of the Traffic Separation Scheme;

(ii) On the East by 146°00′ West longitude;

(iii) On the North by 60°49′ North latitude; and

(iv) On the South by that area of Hinchinbrook Entrance within the territorial sea bounded by 60°07′ North latitude and 146°31.5′ West longitude.

112. Amend § 15.815 as follows:

a. In paragraph (a), remove the words ''gross tons'' and add, in their place, the word ''GRT''; and remove the word ''shall'' and add, in its place, the word ''must'';

b. Revise paragraph (b) to read as set down below;

c. In paragraph (c), remove the words ''on board'' and add, in their place, the word ''onboard''; and before the words ''26 feet'', remove the word ''approximately'';

d. In paragraph (d), remove the word ''their'' and add, in its place, the words ''his or her''; and

e. Revise paragraph (e) to read as follows.

§ 15.815 Radar observers.

* * * * *

(b) Each person who is employed or serves as pilot in accordance with Federal law onboard radar-equipped vessels of 300 GRT or over must hold an endorsement as radar observer.

* * * * *

(e) For this section, ''readily available'' means that the documentation must be provided to the Coast Guard, or other appropriate Federal agency, within 48 hours of a request by the Coast Guard or other agency. The documentation may be provided by the individual, or his or her company representative, electronically, by facsimile, or physical copy.

113. Add § 15.816 to read as follows:

§ 15.816 Automatic radar plotting aids (ARPAs).

Every person in the required complement of deck officers, including the master, on seagoing vessels equipped with automatic radar plotting aids (ARPAs), except those vessels listed in § 15.103(f) and (g) of this part, must provide evidence of competence in the use of ARPAs.

114. Add § 15.817 to read as follows:

§ 15.817 Global Maritime Distress and Safety System (GMDSS) radio operator.

Every person in the required complement of deck officers, including the master, on seagoing vessels equipped with a GMDSS, except those vessels listed in § 15.103(f) and (g) of this part, must provide evidence of a valid STCW endorsement as GMDSS radio operator.

115. Add § 15.818 to read as follows:

§ 15.818 Global Maritime Distress and Safety System (GMDSS) at-sea maintainer.

Every person employed or engaged to maintain GMDSS equipment at sea, when the service of a person so designated is used to meet the maintenance requirements of SOLAS Regulation IV/15 (Incorporated by reference, see § 15.103 of this part), must provide documentary evidence that he or she is competent to maintain GMDSS equipment at sea.

§ 15.820 [Amended]

116. Amend § 15.820 as follows:

a. In paragraph (a) introductory, remove the words ''on board'' and add, in their place, the word ''onboard''; after the word ''the following'', remove the word ''inspected''; and after the words ''mechanically propelled'', add the word ''inspected'';

b. In paragraph (a)(1), remove the words ''200 gross tons and over.'' and add, in their place, the words ''200 GRT and over;'';

c. In paragraph (a)(2), remove the words ''200 gross tons.'' and add, in their place, the words ''200 GRT; and''

d. In paragraph (a)(3), remove the words ''300 gross tons and over'' and

add, in their place, the words ''300 GRT or more''; and

e. In paragraph (b), remove the words ''gross tons or over'' and add, in their place, the words ''GRT or more''.

§ 15.825 [Amended]

117. Amend § 15.825 as follows:

a. In paragraph (a), remove the words ''gross tons or over'' and add, in their place, the words ''GRT or more''; and

b. In paragraph (b), remove the words ''Officer in Charge, Marine Inspection'' and add, in their place, the word ''OCMI''.

§ 15.830 [Amended]

118. In § 15.830, after the word ''requirements'', add the words ''as found in 47 CFR 13 and 47 CFR 80''.

§ 15.840 [Amended]

119. Amend § 15.840 as follows:

a. In paragraph (a), remove the words ''gross tons'' and add, in their place, the word ''GRT''; remove the word ''1east'' and add, in its place, the word ''least''; and remove the words ''two watch'' and add, in their place, the words ''two-watch'';

b. In paragraph (b), after the words ''offshore supply vessel'', add the word ''(OSV)''; and remove the word ''chapter'' and add, in its place, the word ''subchapter''; and

c. In paragraph (c), after the words ''person in charge'', add the word ''(PIC)''.

120. Revise § 15.845 to read as follows:

§ 15.845 Lifeboatmen.

The number of lifeboatmen required for a vessel is specified in part 199 of this chapter; however, on vessels not equipped with lifeboats, a lifeboatman may be replaced by a lifeboatman-limited.

§ 15.855 [Amended]

121. Amend § 15.855 as follows:

a. In paragraph (a), remove the word ''shall'' and add, in its place, the word ''must'';

b. In paragraph (b), remove the words ''gross tons'' and add, in their place, the word ''GRT''; and remove the words ''on board'' and add, in their place, the word ''onboard'';

c. In paragraph (c) introductory text, remove the words ''gross tons'' and add, in their place, the word ''GRT'';

d. In paragraphs (c)(1) and (c)(2), after the word ''chapter'', remove the character ''.'' and add, in its place, the character '';'';

e. In paragraph (c)(3), after the word ''spaces'', remove the character ''.'' and add, in its place, the character '';'';

f. In paragraph (c)(4), after the word ''deck'', remove the character ''.'' and add, in its place, the character '';'';

g. In paragraph (c)(5), after the word ''condition'', remove the character ''.'' and add, in its place, the words ''; and''; and

h. In paragraph (c)(6), after the words ''in accordance with § 15.705'', add the words ''of this part''.

122. Revise § 15.860 to read as follows:

§ 15.860 Tankerman.

(a) The OCMI enters on the COI issued to each manned tank vessel subject to the regulations in this chapter the number of crewmembers required to hold valid MMDs or MMCs with the proper tankerman endorsement. Table 1 to § 15.860 provides the minimum requirements for tankermen aboard manned tank vessels; Table 2 to § 15.860 provides the tankerman endorsements required for personnel aboard tankships.

(b) For each tankship of more than 5,000 GRT certified for voyages beyond the boundary line as described in part 7 of this chapter:

(1) The number of tankerman-PICs or restricted tankerman-PICs carried must be at least two;

(2) The number of tankerman-assistants carried must be at least three; and

(3) The number of tankerman-engineers carried must be at least two.

(c) For each tankship of 5,000 GRT or less certified for voyages beyond the boundary line, as described in part 7 of this chapter:

(1) The number of tankerman-PICs or restricted tankerman-PICs carried must be at least two; and

(2) The number of tankerman-engineers carried must be at least two, unless only one engineer is required, in which case the number of tankerman-engineers carried must be at least one.

(d) For each tankship not certified for voyages beyond the boundary line, as described in part 7 of this chapter, if the total crew complement is:

(1) One or two, the number of tankerman-PICs or restricted tankerman-PICs carried must be at least one; or

(2) More than two, the number of tankerman-PICs or restricted tankerman-PICs carried must be at least two.

(e) For each tank barge manned under § 31.15–5 of this chapter, if the total crew complement is:

(1) One or two, the number of tankerman-PICs, restricted tankerman-PICs, tankerman-PICs (barge), or restricted tankerman-PICs (barge) carried must be at least one; or

(2) More than two, the number of tankerman-PICs, restricted tankerman-PICs, tankerman-PICs (barge), or restricted tankerman-PICs (barge) carried must be at least two.

(f) The following personnel aboard each tankship certified for voyages beyond the boundary line, as described in part 7 of this chapter, must hold valid MMDs or MMCs, endorsed as follows:

(1) The master and chief mate must each hold a tankerman-PIC or restricted tankerman-PIC endorsement.

(2) The chief, first assistant, and cargo engineers must each hold a tankerman-engineer or tankerman-PIC endorsement.

(3) Each credentialed officer acting as the PIC of a transfer of liquid cargo in bulk must hold a tankerman-PIC or restricted tankerman-PIC endorsement.

(4) Each officer or crewmember who is assigned by the PIC duties and responsibilities related to the cargo or cargo-handling equipment during a transfer of liquid cargo in bulk, but is not directly supervised by the PIC, must hold a tankerman-assistant endorsement.

(g) The endorsements required by this section must be for the classification of the liquid cargo in bulk or of the cargo residue being carried.

(h) Because STCW does not recognize restricted tankerman-PIC endorsements, persons may act under these only aboard vessels conducting business inside the boundary line, as described in part 7 of this chapter.

(i) All individuals serving on tankships certified for voyages beyond the boundary line as described in part 7 of this chapter, must hold an appropriate STCW endorsement, as follows:

(1) For tankerman-PIC, an STCW endorsement as Advanced Oil Tanker Cargo Operations, Advanced Chemical Tanker Cargo Operations, or Advanced Liquefied Gas Tanker Cargo Operations, as appropriate.

(2) For tankerman-Assistant, an STCW endorsement as Basic Oil and Chemical Tanker Cargo Operations, or Basic Liquefied Gas Tanker Cargo Operations, as appropriate.

(j) For a tankerman-PIC (barge), an STCW endorsement as Advanced Oil Tanker Cargo Operations, Advanced Chemical Tanker Cargo Operations, or Advanced Liquefied Gas Tanker Cargo Operations, as appropriate, are not required to obtain an STCW endorsement with a limitation for non-self-propelled vessels.

TABLE 1 TO 15.860—MINIMUM REQUIREMENTS FOR TANKERMEN ABOARD MANNED TANK VESSELS

Tank vessels	Tankerman-PIC	Tankerman assistant	Tankerman engineer	Tankerman-PIC or tankerman-PIC (barge)
Tankship Certified for Voyages Beyond Boundary Line:				
Over 5,000 GRT	2	3	2	.....
5,000 GRT or less	2	.....	*2	.....
Tankship Not Certified for Voyages Beyond Boundary Line	**2	.....	.....	.....
Tank Barge	.....	.....	.....	***2

*If only one engineer is required, then only one tankerman engineer is required.
**If the total crew complement is one or two persons, then only one tankerman-PIC is required.
***If the total crew complement is one or two persons, then only one tankerman-PIC or tankerman-PIC (barge) is required.

TABLE 2 TO 15.860—TANKERMEN ENDORSEMENTS REQUIRED FOR PERSONNEL ABOARD TANKSHIPS

[Endorsement for the classification of the bulk liquid cargo or residues carried]

Tankship certified for voyages beyond boundary line	Tankerman-PIC		Tankerman engineer	Tankerman assistant
Master	x			
Chief Mate	x			
Chief Engineer	x	or	x	
First Assistant Engineer	x	or	x	
Cargo Engineer	x	or	x	
Credentialed Officer Acting as PIC of Transfer of Liquid Cargo in Bulk	x			
Credentialed Officer or Crewmember Not Directly Supervised by PIC	.....	....	.....	x

123. Amend § 15.901 as follows:

a. Revise the heading of § 15.901 to read as set down below;

b. In paragraph (a), remove the words ''over 200 gross tons'' and add, in their place, the words ''200 GRT/500 GT or more''; remove the words ''100 gross tons'' and add, in their place, the words ''100 GRT''; and after the words ''on the individual's license or MMC'', add the words '', without further endorsement''; and

c. In paragraphs (b), (c), and (d), after the words ''on the individual's license or MMC'', add the words '', without further endorsement''.

§ 15.901 Inspected vessels of less than 100 GRT.

* * * * *

124. Amend § 15.905 as follows:

a. In paragraph (a), remove the words ''under 100 gross tons'' and add, in their place, the words ''of less than 100 GRT''; and after the words ''other than'' and before the word ''tonnage'', remove the word ''gross'';

b. In paragraph (b), remove the words ''at least 100 gross tons'' and add, in their place, the words ''100 GRT or more''; and

c. Revise paragraph (c) to read as follows:

§ 15.905 Uninspected passenger vessels.

* * * * *

(c) An individual holding a license or MMC endorsed as mate of an inspected, self-propelled vessel (other than Great Lakes, inland, or river vessels of less than 200 GRT/500 GT) is authorized to serve as operator of uninspected passenger vessels of less than 100 GRT within any restrictions, other than tonnage limitations, on the individual's license or MMC.

125. Revise § 15.915 to read as follows:

§ 15.915 Engineer officer endorsements.

The following licenses and MMC officer endorsements authorize the holder to serve as noted, within any restrictions on the license or MMC, and as provided by § 15.401 of this part:

(a) A designated duty engineer license or endorsement authorizes service as chief or assistant engineer on vessels of less than 200 GRT/500 GT in the following manners:

(1) A designated duty engineer limited to vessels of less than 1,000 horsepower or 4,000 horsepower may serve only on near-coastal, Great Lakes, or inland waters.

(2) A designated duty engineer with no horsepower limitations may serve on any waters.

(b) A chief engineer (limited-oceans) license or endorsement authorizes service as chief or assistant engineer on vessels of any gross tons on inland waters and of less than 1,600 GRT/3,000 GT on ocean, near-coastal, or Great Lakes waters.

(c) A chief engineer (limited near-coastal) license or endorsement authorizes service as chief or assistant engineer on vessels of any gross tons on inland waters and of less than 1,600 GRT/3,000 GT on near-coastal or Great Lakes waters.

(d) An assistant engineer (limited-oceans) license or endorsement authorizes service on vessels of any gross tons on inland waters and of less than 1,600 GRT/3,000 GT on ocean, near-coastal, or Great Lakes waters.

126. Revise newly redesignated subpart K to read as follows:

Subpart K—Vessels Subject to Requirements of STCW

Sec.
15.1101 General.
15.1103 Employment and service within the restrictions of an STCW endorsement or of a certificate of training.
15.1105 Familiarization and basic safety training (BST).
15.1107 Maintenance of merchant mariners' records by owner or operator.
15.1109 Watches.
15.1111 Work hours and rest periods.
15.1113 Security personnel.

§ 15.1101 General.

(a) Except as noted in paragraphs (1) and (2) of this paragraph, the regulations in this subpart apply to seagoing vessels as defined in § 10.107 of this subchapter, subject to the STCW Convention (incorporated by reference, see § 15.103 of this part).

(1) The following vessels are exempt from application of the STCW Convention:

(i) Fishing vessels as defined in 46 U.S.C. 2101(11)(a);

(ii) Fishing vessels used as fish-tender vessels as defined in 46 U.S.C. 2101(11)(c);

(iii) Barges as defined in 46 U.S.C. 102, including non-self-propelled MODUs; and

(iv) Vessels operating exclusively on the Great Lakes or on the inland waters of the U.S., in the Straits of Juan de Fuca, or on the Inside Passage between Puget Sound and Cape Spencer.

(2) The following small vessels engaged exclusively on domestic voyages are not subject to further obligation for the purposes of the STCW Convention:

(i) Small passenger vessels subject to subchapter T or K of title 46 CFR;

(ii) Vessels of less than 200 GRT/500 GT (other than passenger vessels subject to subchapter H of title 46 CFR); and

(iii) Uninspected passenger vessels as defined in 46 U.S.C. 2101(42)(B).

(b) Masters, mates, and engineers serving on vessels identified in paragraphs (a)(2)(i) and (a)(2)(ii) of this section may be issued, without additional proof of qualification, an appropriate STCW endorsement when the Coast Guard determines that such a document is necessary to enable the vessel to engage on a single international voyage of a non-routine nature. The STCW endorsement will be expressly limited to service on the vessel or the class of vessels and will not establish qualification for any other purpose.

§ 15.1103 Employment and service within the restrictions of an STCW endorsement or of a certificate of training.

(a) Onboard a seagoing vessel operating beyond the boundary line, as described in part 7 of this chapter, no person may employ or engage any person to serve, and no person may serve, in a position requiring a person to hold an STCW endorsement, including master, chief mate, chief engineer officer, second engineer officer, officer of the navigational or engineering watch, or GMDSS radio operator, unless the person serving holds an appropriate, valid STCW endorsement issued in accordance with part 11 of this subchapter.

(b) Onboard a seagoing vessel of 200 GRT/500 GT or more, no person may employ or engage any person to serve, and no person may serve, as an RFPNW or able seafarer-deck, except for training, unless the person serving holds an appropriate, valid STCW endorsement issued in accordance with part 12 of this subchapter.

(c) Onboard a seagoing vessel driven by main propulsion machinery of 1,000 HP/750 kW propulsion power or more, no person may employ or engage any person to serve, and no person may serve, as an RFPEW or able seafarer-engine, nor may any person be designated to perform duties in a periodically unmanned engine-room, except for training or for the performance of duties of an unskilled nature, unless the person serving holds an appropriate, valid STCW endorsement issued in accordance with part 12 of this subchapter.

(d) Onboard a passenger ship, as defined by the Convention for the Safety of Life at Sea, 1974, as amended (SOLAS) (incorporated by reference, see § 15.103 of this part), on an international voyage, any person serving as master, chief mate, mate, chief engineer, engineer officer, and any person holding a license, MMD, or MMC and performing duties relating to safety, cargo handling, or care for passengers, must meet the appropriate requirements of Regulation V/2 of the STCW Convention (incorporated by reference, see § 15.103 of this part). These individuals must hold documentary evidence to show they meet these requirements.

(e) Onboard a seagoing vessel required to comply with provisions of the GMDSS in Chapter IV of SOLAS, no person may employ or engage any person to serve, and no person may serve, as the person designated to maintain GMDSS equipment at sea, when the service of a person so designated is used to meet the maintenance requirements of SOLAS Regulation IV/15, which allows for capability of at-sea electronic maintenance to ensure that radio equipment is available for radio communication, unless the person so serving holds documentary evidence that he or she is competent to maintain GMDSS equipment at sea.

(f) *Medical certificate/endorsement.* (1) A person may not employ or engage an individual unless that individual maintains a current medical certificate/endorsement. Medical certificates/endorsements must be issued and will remain current for a period of 2 years for individuals serving on vessels to which STCW applies.

(2) If a mariner's medical certificate/endorsement expires during a voyage, it will remain valid until the next United States port of call, provided that the period after expiration does not exceed 90 days.

§ 15.1105 Familiarization and basic safety training (BST).

(a) Onboard a seagoing vessel except as noted in § 15.1101(a)(2) of this part, no person may assign any person to perform shipboard duties, and no person may perform those duties, unless the person performing them has received—

(1) Training in personal survival techniques as set out in the standard of competence under STCW Regulation VI/1 (incorporated by reference, see § 15.103 of this part); or

(2) Sufficient familiarization training or instruction that he or she—

(i) Can communicate with other persons onboard about elementary safety matters and understand informational symbols, signs, and alarm signals concerning safety;

(ii) Knows what to do if a person falls overboard; if fire or smoke is detected; or if the fire alarm or abandon-ship alarm sounds;

(iii) Can identify stations for muster and embarkation, and emergency-escape routes;

(iv) Can locate and don life jackets;

(v) Can raise the alarm and knows the use of portable fire extinguishers;

(vi) Can take immediate action upon encountering an accident or other medical emergency before seeking further medical assistance onboard; and

(vii) Can close and open the fire doors, weather-tight doors, and watertight doors fitted in the vessel other than those for hull openings.

(b) Onboard a seagoing vessel, no person may assign a shipboard duty or responsibility to any person who is serving in a position that must be filled as part of the required crew complement, and no person may perform any such duty or responsibility, unless he or she is familiar with it and with all vessel's arrangements, installations, equipment, procedures, and characteristics relevant to his or her routine and emergency duties or responsibilities, in accordance with STCW Regulation I/14.

(c) Onboard a seagoing vessel, no person may assign a shipboard duty or responsibility to any person who is serving in a position that must be filled as part of the required crew complement or who is assigned a responsibility on the muster list, and no person may perform any such duty or responsibility, unless the person performing it can produce evidence of having—

(1) Received appropriate approved basic safety training or instruction as set out in the standards of competence under STCW Regulation VI/1, with respect to personal survival techniques, fire prevention and fire-fighting, elementary first aid, and personal safety and social responsibilities; and

(2) Maintained the standard of competence under STCW Regulation VI/1, with respect to personal survival

techniques, fire prevention and fire-fighting, elementary first aid, and personal safety and social responsibilities, every 5 years.

(d) Fish-processing vessels in compliance with the provisions of 46 CFR part 28 on instructions, drills, and safety orientation are deemed to be in compliance with the requirements of this section on familiarization and basic safety training.

§ 15.1107 Maintenance of merchant mariners' records by owner or operator.

For every credentialed mariner employed on a U.S.-documented seagoing vessel, the owner or operator must ensure that the following information is maintained and readily accessible to those in management positions, including the master of the vessel, who are responsible for the safety of the vessel, compliance with laws and regulations, and for the prevention of marine pollution:

(a) Experience and training relevant to assigned shipboard duties (i.e., record of training completed, ship-specific familiarization and of relevant on-the-job experience acquired); and

(b) Copies of the mariner's current credentials.

§ 15.1109 Watches.

Each master of a vessel that operates beyond the boundary line, as described in part 7 of this chapter, must ensure observance of the principles concerning watchkeeping set out in Regulation VIII/2 of the STCW Convention and section A–VIII/2 of the STCW Code (both incorporated by reference, see § 15.103 of this part).

§ 15.1111 Work hours and rest periods.

(a) Every person assigned duty as officer in charge of a navigational or engineering watch, or duty as ratings forming part of a navigational or engineering watch, or designated safety, prevention of pollution, and security duties onboard any vessel that operates beyond the boundary line, as described in part 7 of this chapter, must receive:

(1) A minimum of 10 hours of rest in any 24-hour period; and

(2) 77 hours in any 7-day period.

(b) The hours of rest required under paragraph (a) of this section may be divided into no more than two periods in any 24-hour period, one of which must be at least 6 hours in length, and the interval between consecutive periods of rest must not exceed 14 hours.

(c) The requirements of paragraph (a) and (b) of this section need not be maintained in the case of an emergency or drill or in other overriding operational conditions.

(d) The minimum period of rest required under paragraph (a) of this section may not be devoted to watchkeeping or other duties.

(e) Watchkeeping personnel remain subject to the work-hour limits in 46 U.S.C. 8104 and to the conditions when crewmembers may be required to work.

(f) The master must post watch schedules where they are easily accessible. They must cover each affected member of the crew and must take into account the rest requirements of this section as well as port rotations and changes in the vessel's itinerary.

(g) Records of daily hours of rest for mariners must be maintained onboard the vessel. These records must be endorsed by the master or a person authorized by the master and by the mariner. A copy of the records must be provided to the mariner.

(h) For every person on call, such as when a machinery space is unattended, the person must have an adequate compensatory rest period if the normal period of rest is disturbed by call-outs to work.

(i) The master of the vessel may suspend the schedule of hours of rest and require a mariner to perform any hours of work necessary for the immediate safety of the ship, persons onboard, or cargo, or for the purpose of giving assistance to other ships or persons in distress at sea. As soon as practicable after the situation has been restored, the master must ensure that any mariner who has performed work in a scheduled rest period is provided with an adequate period of rest.

(j) In exceptional circumstances, the master may authorize exceptions from the hours of rest required under paragraph (a)(2) of this section provided that the rest period is not less than 70 hours in any 7-day period. These exceptions must meet the following additional requirements:

(1) Exceptions shall not extend beyond two 24-hour periods in any 7-day period;

(2) Exceptions shall not extend for more than two consecutive weeks; and

(3) The intervals between two periods of exceptions shall not be less than twice the duration of the exception.

§ 15.1113 Security personnel.

(a) Onboard a seagoing vessel of 200 GRT/500 GT or more, all persons performing duties as Vessel Security Officer (VSO) must hold a valid endorsement as VSO.

(b) After July 1, 2012, all personnel with security duties must hold a valid endorsement as vessel personnel with designated security duties, or a certificate of course completion from an appropriate Coast Guard-accepted course meeting the requirements of 33 CFR 104.220.

(c) After July 1, 2012, all other vessel personnel, including contractors, whether part-time, full-time, temporary, or permanent, must hold a valid endorsement in security awareness, or a certificate of course completion from an appropriate Coast Guard-accepted course meeting the requirements of 33 CFR 104.225.

Dated: June 30, 2011.

Robert J. Papp, Jr.,

Admiral, U.S. Coast Guard, Commandant.

[FR Doc. 2011–17093 Filed 7–29–11; 8:45 am]

BILLING CODE 9110–04–P

FEDERAL REGISTER

Vol. 76 Monday,

No. 147 August 1, 2011

Part III

Environmental Protection Agency

40 CFR Part 50

Secondary National Ambient Air Quality Standards for Oxides of Nitrogen and Sulfur; Proposed Rule

ENVIRONMENTAL PROTECTION AGENCY

40 CFR Part 50

[EPA–HQ–OAR–2007–1145; FRL–9441–2]

RIN 2060–AO72

Secondary National Ambient Air Quality Standards for Oxides of Nitrogen and Sulfur

AGENCY: Environmental Protection Agency (EPA).

ACTION: Proposed rule.

SUMMARY: This proposed rule is being issued as required by a consent decree governing the schedule for completion of this review of the air quality criteria and the secondary national ambient air quality standards (NAAQS) for oxides of nitrogen and oxides of sulfur. Based on its review, EPA proposes to retain the current nitrogen dioxide (NO_2) and sulfur dioxide (SO_2) secondary standards to provide requisite protection for the direct effects on vegetation resulting from exposure to gaseous oxides of nitrogen and sulfur in the ambient air. Additionally, with regard to protection from the deposition of oxides of nitrogen and sulfur to sensitive aquatic and terrestrial ecosystems, including acidification and nutrient enrichment effects, EPA is proposing to add secondary standards identical to the NO_2 and SO_2 primary 1-hour standards and not set a new multi-pollutant secondary standard in this review. The proposed 1-hour secondary NO_2 standard would be set at a level of 100 ppb and the proposed 1-hour secondary SO_2 standard would be set at 75 ppb. In addition, EPA has decided to undertake a field pilot program to gather and analyze additional relevant data so as to enhance the Agency's understanding of the degree of protectiveness that a new multi-pollutant approach, defined in terms of an aquatic acidification index (AAI), would afford and to support development of an appropriate monitoring network for such a standard. The EPA solicits comment on the framework of such a standard and on the design of the field pilot program. The EPA will sign a notice of final rulemaking for this review no later than March 20, 2012.

DATES: Written comments on this proposed rule must be received by September 30, 2011.

Public Hearings: The EPA intends to hold a public hearing around the end of August to early September and will announce in a separate **Federal Register** notice the date, time, and address of the public hearing on this proposed rule.

ADDRESSES: Submit your comments, identified by Docket ID No. EPA–HQ–OAR–2007–1145, by one of the following methods:

- *http://www.regulations.gov:* Follow the on-line instructions for submitting comments.
- *E-mail: a-and-r-Docket@epa.gov.*
- *Fax:* 202–566–1741.
- *Mail:* Docket No. EPA–HQ–OAR–2007–1145, Environmental Protection Agency, Mail code 6102T, 1200 Pennsylvania Ave., NW., Washington, DC 20460. Please include a total of two copies.
- *Hand Delivery:* Docket No. EPA–HQ–OAR–2007–1145, Environmental Protection Agency, EPA West, Room 3334, 1301 Constitution Ave., NW., Washington, DC. Such deliveries are only accepted during the Docket's normal hours of operation, and special arrangements should be made for deliveries of boxed information.

Instructions: Direct your comments to Docket ID No. EPA–HQ–OAR–2007–1145. The EPA's policy is that all comments received will be included in the public docket without change and may be made available online at *http://www.regulations.gov,* including any personal information provided, unless the comment includes information claimed to be Confidential Business Information (CBI) or other information whose disclosure is restricted by statute. Do not submit information that you consider to be CBI or otherwise protected through *http://www.regulations.gov* or e-mail. The *http://www.regulations.gov* Web site is an ''anonymous access'' system, which means EPA will not know your identity or contact information unless you provide it in the body of your comment. If you send an e-mail comment directly to EPA without going through *http://www.regulations.gov,* your e-mail address will be automatically captured and included as part of the comment that is placed in the public docket and made available on the Internet. If you submit an electronic comment, EPA recommends that you include your name and other contact information in the body of your comment and with any disk or CD–ROM you submit. If EPA cannot read your comment due to technical difficulties and cannot contact you for clarification, EPA may not be able to consider your comment. Electronic files should avoid the use of special characters, any form of encryption, and be free of any defects or viruses. For additional information about EPA's public docket, visit the EPA Docket Center homepage at *http://www.epa.gov/epahome/dockets.htm.*

Docket: All documents in the docket are listed in the *http://www.regulations.gov* index. Although listed in the index, some information is not publicly available, *e.g.,* CBI or other information whose disclosure is restricted by statute. Certain other material, such as copyrighted material, will be publicly available only in hard copy. Publicly available docket materials are available either electronically in *http://www.regulations.gov* or in hard copy at the Air and Radiation Docket and Information Center, EPA/DC, EPA West, Room 3334, 1301 Constitution Ave., NW., Washington, DC. The Public Reading Room is open from 8:30 a.m. to 4:30 p.m., Monday through Friday, excluding legal holidays. The telephone number for the Public Reading Room is (202) 566–1744 and the telephone number for the Air and Radiation Docket and Information Center is (202) 566–1742.

FOR FURTHER INFORMATION CONTACT: Dr. Richard Scheffe, Office of Air Quality Planning and Standards, U.S. Environmental Protection Agency, Mail code C304–02, Research Triangle Park, NC 27711; telephone: 919–541–4650; fax: 919–541–2357; e-mail: *scheffe.rich@epa.gov.*

SUPPLEMENTARY INFORMATION:

General Information

What should I consider as I prepare my comments for EPA?

1. *Submitting CBI.* Do not submit this information to EPA through *http://www.regulations.gov* or e-mail. Clearly mark the part or all of the information that you claim to be CBI. For CBI information in a disk or CD ROM that you mail to EPA, mark the outside of the disk or CD ROM as CBI and then identify electronically within the disk or CD ROM the specific information that is claimed as CBI. In addition to one complete version of the comment that includes information claimed as CBI, a copy of the comment that does not contain the information claimed as CBI must be submitted for inclusion in the public docket. Information so marked will not be disclosed except in accordance with procedures set forth in 40 CFR part 2.

2. *Tips for Preparing Your Comments.* When submitting comments, remember to:

- Identify the rulemaking by docket number and other identifying information (subject heading, **Federal Register** date and page number).

- Follow directions—The Agency may ask you to respond to specific questions or organize comments by referencing a Code of Federal Regulations (CFR) part or section number.
- Explain why you agree or disagree, suggest alternatives, and substitute language for your requested changes.
- Describe any assumptions and provide any technical information and/or data that you used.
- If you estimate potential costs or burdens, explain how you arrived at your estimate in sufficient detail to allow for it to be reproduced.
- Provide specific examples to illustrate your concerns, and suggest alternatives.
- Explain your views as clearly as possible.
- Make sure to submit your comments by the comment period deadline identified.

Availability of Related Information

A number of documents relevant to this rulemaking are available on EPA web sites. The Integrated Science Assessment for Oxides of Nitrogen and Sulfur—Ecological Criteria: Final Report (ISA) is available on EPAs National Center for Environmental Assessment Web site. To obtain this document, go to *http://www.epa.gov/ncea,* and click on Air Quality then click on Oxides of Nitrogen and Sulfur. The Policy Assessment (PA), Risk and Exposure Assessment (REA), and other related technical documents are available on EPA's Office of Air Quality Planning and Standards (OAQPS) Technology Transfer Network (TTN) web site. The PA is available at *http://www.epa.gov/ttn/naaqs/standards/no2so2sec/cr_pa.html,* and the exposure and risk assessments and other related technical documents are available at *http://www.epa.gov/ttn/naaqs/standards/no2so2sec/cr_rea.html.* These and other related documents are also available for inspection and copying in the EPA docket identified above.

Table of Contents

The following topics are discussed in this preamble:

I. Background
A. Legislative Requirements
B. History of Reviews of NAAQS for Nitrogen Oxides and Sulfur Oxides
1. NAAQS for Oxides of Nitrogen
2. NAAQS for Oxides of Sulfur
C. History of Related Assessments and Agency Actions
D. History of the Current Review
E. Scope of the Current Review
II. Rationale for Proposed Decision on the Adequacy of the Current Secondary Standards
A. Ecological Effects
1. Effects Associated with Gas-Phase Oxides of Nitrogen and Sulfur
a. Nature of ecosystem responses to gas-phase nitrogen and sulfur
b. Magnitude of ecosystem response to gas-phase nitrogen and sulfur
2. Acidification Effects Associated with Deposition of Oxides of Nitrogen and Sulfur
a. Nature of Acidification-related Ecosystem Responses
i. Aquatic Ecosystems
ii. Terrestrial Ecosystems
iii. Ecosystem Sensitivity
b. Magnitude of Acidification-Related Ecosystem Responses
i. Aquatic Acidification
ii. Terrestrial Acidification
c. Key Uncertainties Associated With Acidification
i. Aquatic Acidification
ii. Terrestrial Acidification
3. Nutrient Enrichment Effects Associated With Deposition of Oxides of Nitrogen
a. Nature of Nutrient Enrichment-Related Ecosystem Responses
i. Aquatic Ecosystems
ii. Terrestrial Ecosystems
iii. Ecosystem Eensitivity to Nutrient Enrichment
b. Magnitude of Nutrient Enrichment-Related Ecosystem Responses
i. Aquatic Ecosystems
ii. Terrestrial Ecosystems
c. Key Uncertainties Associated With Nutrient Enrichment
i. Aquatic Ecosystems
ii. Terrestrial Ecosystems
4. Other Ecological Effects
B. Risk and Exposure Assessment
1. Overview of Risk and Exposure Assessment
2. Key Findings
a. Air Quality Analyses
b. Deposition-Related Aquatic Acidification
c. Deposition-Related Terrestrial Acidification
d. Deposition-Related Aquatic Nutrient Enrichment
e. Deposition-Related Terrestrial Nutrient Enrichment
f. Additional Effects
3. Conclusions on Effects
C. Adversity of Effects to Public Welfare
1. Ecosystem Services
2. Effects on Ecosystem Services
a. Aquatic Acidification
b. Terrestrial Acidification
c. Nutrient Enrichment
3. Summary
D. Adequacy of the Current Standards
1. Adequacy of the Current Standards for Direct Effects
2. Appropriateness and Adequacy of the Current Standards for Deposition-Related Effects
a. Appropriateness
b. Adequacy of Protection
i. Aquatic Acidification
ii. Terrestrial Acidification
iii. Terrestrial Nutrient Enrichment
iv. Aquatic Nutrient Enrichment
v. Other Effects
3. CASAC Views
4. Administrator's Proposed Conclusions Concerning Adequacy of Current Standard
III. Rationale for Proposed Decision on Alternative Multi-Pollutant Approach to Secondary Standards for Aquatic Acidification
A. Ambient Air Indicators
1. Oxides of Sulfur
2. Oxides of Nitrogen
B. Form
1. Ecological Indicator
2. Linking ANC to Deposition
3. Linking Deposition to Ambient Air Indicators
4. Aquatic Acidification Index
5. Spatial Aggregation
a. Ecoregion Sensitivity
b. Representative Ecoregion-Specific Factors
i. Factor F1
(a) Acid-Sensitive Ecoregions
(b) Non-Acid Sensitive Ecoregions
ii. Factor F2
iii. Factors F3 and F4
c. Factors in Data-limited Ecoregions
d. Application to Hawaii, Alaska, and the U.S. Territories
6. Summary of the AAI Form
C. Averaging Time
D. Level
1. Association Between pH Levels and Target ANC Levels
2. ANC Levels Related to Effects on Aquatic Ecosystems
3. Consideration of Episodic Acidity
4. Consideration of Ecosystem Response Time
5. Prior Examples of Target ANC Levels
6. Consideration of Public Welfare Benefits
7. Summary of Alternative Levels
E. Combined Alternative Levels and Forms
F. Characterization of Uncertainties
1. Overview of Uncertainty
2. Uncertainties Associated with Data Gaps
3. Uncertainties in Modeled Processes
4. Applying Knowledge of Uncertainties
G. CASAC Advice
H. Administrator's Proposed Conclusions
IV. Field Pilot Program and Ambient Monitoring
A. Field Pilot Program
1. Objectives
2. Overview of Field Pilot Program
3. Complementary Measurements
4. Complementary Areas of Research Implementation Challenges
5. Final Monitoring Plan Development and Stakeholder Participation
B. Evaluation of Monitoring Methods
1. Potential FRMs for SO_2 and p-SO_4
2. Potential FRM for NO_y
V. Statutory and Executive Order Reviews
A. Executive Order 12866: Regulatory Planning and Review
B. Paperwork Reduction Act
C. Regulatory Flexibility Act
D. Unfunded Mandates Reform Act
E. Executive Order 13132: Federalism
F. Executive Order 13175: Consultation and Coordination With Indian Tribal Governments
G. Executive Order 13045: Protection of Children From Environmental Health and Safety Risks

H. Executive Order 13211: Actions That Significantly Affect Energy Supply, Distribution, or Use
I. National Technology Transfer and Advancement Act
J. Executive Order 12898: Federal Actions To Address Environmental Justice in Minority Populations and Low-Income Populations References

I. Background

A. Legislative Requirements

Two sections of the Clean Air Act (CAA) govern the establishment and revision of the NAAQS. Section 108 (42 U.S.C. section 7408) directs the Administrator to identify and list certain air pollutants and then to issue air quality criteria for those pollutants. The Administrator is to list those air pollutants that in her ''judgment, cause or contribute to air pollution which may reasonably be anticipated to endanger public health or welfare;'' ''the presence of which in the ambient air results from numerous or diverse mobile or stationary sources;'' and ''for which * * * [the Administrator] plans to issue air quality criteria * * *'' Air quality criteria are intended to ''accurately reflect the latest scientific knowledge useful in indicating the kind and extent of all identifiable effects on public health or welfare which may be expected from the presence of [a] pollutant in the ambient air * * *'' 42 U.S.C. 7408(b). Section 109 (42 U.S.C. 7409) directs the Administrator to propose and promulgate ''primary'' and ''secondary'' NAAQS for pollutants for which air quality criteria are issued. Section 109(b)(1) defines a primary standard as one ''the attainment and maintenance of which in the judgment of the Administrator, based on such criteria and allowing an adequate margin of safety, are requisite to protect the public health.'' [1] A secondary standard, as defined in section 109(b)(2), must ''specify a level of air quality the attainment and maintenance of which, in the judgment of the Administrator, based on such criteria, is requisite to protect the public welfare from any known or anticipated adverse effects associated with the presence of [the] pollutant in the ambient air.'' Welfare effects as defined in section 302(h) (42 U.S.C. 7602(h)) include, but are not limited to, ''effects on soils, water, crops, vegetation, man-made materials, animals, wildlife, weather, visibility and climate, damage to and deterioration of property, and hazards to transportation, as well as effects on economic values and on personal comfort and well-being.''

In setting standards that are ''requisite'' to protect public health and welfare, as provided in section 109(b), EPA's task is to establish standards that are neither more nor less stringent than necessary for these purposes. In so doing, EPA may not consider the costs of implementing the standards. *See* generally, *Whitman* v. *American Trucking Associations,* 531 U.S. 457, 465–472, 475–76 (2001). Likewise, ''[a]ttainability and technological feasibility are not relevant considerations in the promulgation of national ambient air quality standards.'' *American Petroleum Institute* v. *Costle,* 665 F. 2d at 1185. Section 109(d)(1) requires that ''not later than December 31, 1980, and at 5-year intervals thereafter, the Administrator shall complete a thorough review of the criteria published under section 108 and the national ambient air quality standards * * * and shall make such revisions in such criteria and standards and promulgate such new standards as may be appropriate * * *.'' Section 109(d)(2) requires that an independent scientific review committee ''shall complete a review of the criteria * * * and the national primary and secondary ambient air quality standards * * * and shall recommend to the Administrator any new * * * standards and revisions of existing criteria and standards as may be appropriate * * *.'' Since the early 1980's, this independent review function has been performed by the Clean Air Scientific Advisory Committee (CASAC).

B. History of Reviews of NAAQS for Nitrogen Oxides and Sulfur Oxides

1. NAAQS for Oxides of Nitrogen

After reviewing the relevant science on the public health and welfare effects associated with oxides of nitrogen, EPA promulgated identical primary and secondary NAAQS for NO_2 in April 1971. These standards were set at a level of 0.053 parts per million (ppm) as an annual average (36 FR 8186). In 1982, EPA published Air Quality Criteria Document for Oxides of Nitrogen (US EPA, 1982), which updated the scientific criteria upon which the initial standards were based. In February 1984 EPA proposed to retain these standards (49 FR 6866). After taking into account public comments, EPA published the final decision to retain these standards in June 1985 (50 FR 25532).

The EPA began the most recent previous review of the oxides of nitrogen secondary standards in 1987. In November 1991, EPA released an updated draft air quality criteria document (AQCD) for CASAC and public review and comment (56 FR 59285), which provided a comprehensive assessment of the available scientific and technical information on health and welfare effects associated with NO_2 and other oxides of nitrogen. The CASAC reviewed the draft document at a meeting held on July 1, 1993 and concluded in a closure letter to the Administrator that the document ''provides a scientifically balanced and defensible summary of current knowledge of the effects of this pollutant and provides an adequate basis for EPA to make a decision as to the appropriate NAAQS for NO_2'' (Wolff, 1993). The AQCD for Oxides of Nitrogen was then finalized (US EPA, 1995a). The EPA's OAQPS also prepared a Staff Paper that summarized and integrated the key studies and scientific evidence contained in the revised AQCD for oxides of nitrogen and identified the critical elements to be considered in the review of the NO_2 NAAQS. The CASAC reviewed two drafts of the Staff Paper and concluded in a closure letter to the Administrator that the document provided a ''scientifically adequate basis for regulatory decisions on nitrogen dioxide'' (Wolff, 1995).

In October 1995, the Administrator announced her proposed decision not to revise either the primary or secondary NAAQS for NO_2 (60 FR 52874; October 11, 1995). A year later, the Administrator made a final determination not to revise the NAAQS for NO_2 after careful evaluation of the comments received on the proposal (61 FR 52852; October 8, 1996). While the primary NO_2 standard was revised in January 2010 by supplementing the existing annual standard with the establishment of a new 1-hour standard, set at a level of 100 ppb (75 FR 6474), the secondary NAAQS for NO_2 remains 0.053 ppm (100 micrograms per cubic meter [μg/m3] of air), annual arithmetic average, calculated as the arithmetic mean of the 1-hour NO_2 concentrations.

2. The NAAQS for Oxides of Sulfur

The EPA promulgated primary and secondary NAAQS for SO_2 in April 1971 (36 FR 8186). The secondary standards included a standard set at 0.02 ppm, annual arithmetic mean, and a 3-hour average standard set at 0.5 ppm, not to be exceeded more than once per year. These secondary standards

[1] The legislative history of section 109 indicates that a primary standard is to be set at ''the maximum permissible ambient air level * * * which will protect the health of any [sensitive] group of the population,'' and that for this purpose ''reference should be made to a representative sample of persons comprising the sensitive group rather than to a single person in such a group.'' S. Rep. No. 91–1196, 91st Cong., 2d Sess. 10 (1970).

were established solely on the basis of evidence of adverse effects on vegetation. In 1973, revisions made to Chapter 5 (''Effects of Sulfur Oxide in the Atmosphere on Vegetation'') of the AQCD for Sulfur Oxides (US EPA, 1973) indicated that it could not properly be concluded that the vegetation injury reported resulted from the average SO_2 exposure over the growing season, rather than from short-term peak concentrations. Therefore, EPA proposed (38 FR 11355) and then finalized (38 FR 25678) a revocation of the annual mean secondary standard. At that time, EPA was aware that then-current concentrations of oxides of sulfur in the ambient air had other public welfare effects, including effects on materials, visibility, soils, and water. However, the available data were considered insufficient to establish a quantitative relationship between specific ambient concentrations of oxides of sulfur and such public welfare effects (38 FR 25679).

In 1979, EPA announced that it was revising the AQCD for oxides of sulfur concurrently with that for particulate matter (PM) and would produce a combined PM and oxides of sulfur criteria document. Following its review of a draft revised criteria document in August 1980, CASAC concluded that acid deposition was a topic of extreme scientific complexity because of the difficulty in establishing firm quantitative relationships among (1) Emissions of relevant pollutants (*e.g.,* SO_2 and oxides of nitrogen), (2) formation of acidic wet and dry deposition products, and (3) effects on terrestrial and aquatic ecosystems. The CASAC also noted that acid deposition involves, at a minimum, several different criteria pollutants: Oxides of sulfur, oxides of nitrogen, and the fine particulate fraction of suspended particles. The CASAC felt that any document on this subject should address both wet and dry deposition, since dry deposition was believed to account for a substantial portion of the total acid deposition problem.

For these reasons, CASAC recommended that a separate, comprehensive document on acid deposition be prepared prior to any consideration of using the NAAQS as a regulatory mechanism for the control of acid deposition. The CASAC also suggested that a discussion of acid deposition be included in the AQCDs for oxides of nitrogen and PM and oxides of sulfur. Following CASAC closure on the AQCD for oxides of sulfur in December 1981, EPA's OAQPS published a Staff Paper in November 1982, although the paper did not directly assess the issue of acid deposition. Instead, EPA subsequently prepared the following documents to address acid deposition: The Acidic Deposition Phenomenon and Its Effects: Critical Assessment Review Papers, Volumes I and II (US EPA, 1984a, b) and The Acidic Deposition Phenomenon and Its Effects: Critical Assessment Document (US EPA, 1985) (53 FR 14935–14936). These documents, though they were not considered criteria documents and did not undergo CASAC review, represented the most comprehensive summary of scientific information relevant to acid deposition completed by EPA at that point.

In April 1988 (53 FR 14926), EPA proposed not to revise the existing primary and secondary standards for SO_2. This proposed decision with regard to the secondary SO_2 NAAQS was due to the Administrator's conclusions that: (1) Based upon the then-current scientific understanding of the acid deposition problem, it would be premature and unwise to prescribe any regulatory control program at that time; and (2) when the fundamental scientific uncertainties had been decreased through ongoing research efforts, EPA would draft and support an appropriate set of control measures. Although EPA revised the primary SO_2 standard in June 2010 by establishing a new 1-hour standard at a level of 75 ppb and revoking the existing 24-hour and annual standards (75 FR 35520), no further decisions on the secondary SO_2 standard have been published.

C. History of Related Assessments and Agency Actions

In 1980, the Congress created the National Acid Precipitation Assessment Program (NAPAP) in response to growing concern about acidic deposition. The NAPAP was given a broad 10-year mandate to examine the causes and effects of acidic deposition and to explore alternative control options to alleviate acidic deposition and its effects. During the course of the program, the NAPAP issued a series of publicly available interim reports prior to the completion of a final report in 1990 (NAPAP, 1990).

In spite of the complexities and significant remaining uncertainties associated with the acid deposition problem, it soon became clear that a program to address acid deposition was needed. The Clean Air Act Amendments of 1990 included numerous separate provisions related to the acid deposition problem. The primary and most important of the provisions, the amendments to Title IV of the Act, established the Acid Rain Program to reduce emissions of SO_2 by 10 million tons and emissions of nitrogen oxides by 2 million tons from 1980 emission levels in order to achieve reductions over broad geographic regions. In this provision, Congress included a statement of findings that led them to take action, concluding that (1) The presence of acid compounds and their precursors in the atmosphere and in deposition from the atmosphere represents a threat to natural resources, ecosystems, materials, visibility, and public health; (2) the problem of acid deposition is of national and international significance; and (3) current and future generations of Americans will be adversely affected by delaying measures to remedy the problem.

Second, Congress authorized the continuation of the NAPAP in order to assure that the research and monitoring efforts already undertaken would continue to be coordinated and would provide the basis for an impartial assessment of the effectiveness of the Title IV program.

Third, Congress considered that further action might be necessary in the long term to address any problems remaining after implementation of the Title IV program and, reserving judgment on the form that action could take, included Section 404 of the 1990 Amendments (Clean Air Act Amendments of 1990, Pub. L. 101–549, § 404) requiring EPA to conduct a study on the feasibility and effectiveness of an acid deposition standard or standards to protect ''sensitive and critically sensitive aquatic and terrestrial resources.'' At the conclusion of the study, EPA was to submit a report to Congress. Five years later, EPA submitted its report, entitled Acid Deposition Standard Feasibility Study: Report to Congress (US EPA, 1995b) in fulfillment of this requirement. That report concluded that establishing acid deposition standards for sulfur and nitrogen deposition may at some point in the future be technically feasible, although appropriate deposition loads for these acidifying chemicals could not be defined with reasonable certainty at that time.

Fourth, the 1990 Amendments also added new language to sections of the CAA pertaining to the scope and application of the secondary NAAQS designed to protect the public welfare. Specifically, the definition of ''effects on welfare'' in Section 302(h) was expanded to state that the welfare effects include effects ''* * * whether caused by transformation, conversion, or combination with other air pollutants.''

In 1999, seven Northeastern states cited this amended language in Section 302(h) in a petition asking EPA to use its authority under the NAAQS program to promulgate secondary NAAQS for the criteria pollutants associated with the formation of acid rain. The petition stated that this language ''clearly references the transformation of pollutants resulting in the inevitable formation of sulfate and nitrate aerosols and/or their ultimate environmental impacts as wet and dry deposition, clearly signaling Congressional intent that the welfare damage occasioned by sulfur and nitrogen oxides be addressed through the secondary standard provisions of Section 109 of the Act.'' The petition further stated that ''recent federal studies, including the NAPAP Biennial Report to Congress: An Integrated Assessment, document the continued and increasing damage being inflicted by acid deposition to the lakes and forests of New York, New England and other parts of our nation, demonstrating that the Title IV program had proven insufficient.'' The petition also listed other adverse welfare effects associated with the transformation of these criteria pollutants, including impaired visibility, eutrophication of coastal estuaries, global warming, and tropospheric ozone and stratospheric ozone depletion.

In a related matter, the Office of the Secretary of the U.S. Department of Interior (DOI) requested in 2000 that EPA initiate a rulemaking proceeding to enhance the air quality in national parks and wilderness areas in order to protect resources and values that are being adversely affected by air pollution. Included among the effects of concern identified in the request were the acidification of streams, surface waters, and/or soils; eutrophication of coastal waters; visibility impairment; and foliar injury from ozone.

In a **Federal Register** notice in 2001 (65 FR 48699), EPA announced receipt of these requests and asked for comment on the issues raised in them. The EPA stated that it would consider any relevant comments and information submitted, along with the information provided by the petitioners and DOI, before making any decision concerning a response to these requests for rulemaking.

The 2005 NAPAP report states that ''* * * scientific studies indicate that the emission reductions achieved by Title IV are not sufficient to allow recovery of acid-sensitive ecosystems. Estimates from the literature of the scope of additional emission reductions that are necessary in order to protect acid-sensitive ecosystems range from approximately 40–80% beyond full implementation of Title IV. * * *'' The results of the modeling presented in this Report to Congress indicate that broader recovery is not predicted without additional emission reductions (NAPAP, 2005).

Given the state of the science as described in the ISA, REA, and in other recent reports, such as the NAPAP reports noted above, EPA has decided, in the context of evaluating the adequacy of the current NO_2 and SO_2 secondary standards in this review, to revisit the question of the appropriateness of setting secondary NAAQS to address remaining known or anticipated adverse public welfare effects resulting from the acidic and nutrient deposition of these criteria pollutants.

D. History of the Current Review

The EPA initiated this current review in December 2005 with a call for information (70 FR 73236) for the development of a revised ISA. An Integrated Review Plan (IRP) was developed to provide the framework and schedule as well as the scope of the review and to identify policy-relevant questions to be addressed in the components of the review. The IRP was released in 2007 (US EPA, 2007) for CASAC and public review. The EPA held a workshop in July 2007 on the ISA to obtain broad input from the relevant scientific communities. This workshop helped to inform the preparation of the first draft ISA, which was released for CASAC and public review in December 2007; a CASAC meeting was held on April 2–3, 2008 to review the first draft ISA. A second draft ISA was released for CASAC and public review in August 2008, and was discussed at a CASAC meeting held on October 1–2, 2008. The final ISA (US EPA, 2008) was released in December 2008.

Based on the science presented in the ISA, EPA developed the REA to further assess the national impact of the effects documented in the ISA. The Draft Scope and Methods Plan for Risk/Exposure Assessment: Secondary NAAQS Review for Oxides of Nitrogen and Oxides of Sulfur outlining the scope and design of the future REA was prepared for CASAC consultation and public review in March 2008. A first draft REA was presented to CASAC and the public for review in August 2008 and a second draft was presented for review in June 2009. The final REA (US EPA, 2009) was released in September 2009. A first draft PA was released in March 2010 and reviewed by CASAC on April 1–2, 2010. In a June 22, 2010 letter to the Administrator, CASAC provided advice and recommendations to the Agency concerning the first draft PA (Russell and Samet, 2010a). A second draft PA was released to CASAC and the public in September 2010 and reviewed by CASAC on October 6–7, 2010. The CASAC provided advice and recommendations to the Agency regarding the second draft PA in a December 9, 2010 letter (Russell and Samet 2010b). The CASAC and public comments on the second draft PA were considered by EPA staff in developing a final PA (US EPA, 2011). CASAC requested an additional meeting to provide additional advice to the Administrator based on the final PA on February 15–16, 2011. On January 14, 2011, EPA released a version of the final PA prior to final document production, to provide sufficient time for CASAC review of the document in advance of this meeting. The final PA, incorporating final reference checks and document formatting, was released in February 2011. In a May 17, 2011 letter (Russell and Samet, 2011a), CASAC offered additional advice and recommendations to the Administrator with regard to the review of the secondary NAAQS for oxides of nitrogen and oxides of sulfur.

In 2005, the Center for Biological Diversity and four other plaintiffs filed a complaint alleging that EPA had failed to complete the current review within the period provided by statute.[2] The schedule for completion of this review is governed by a consent decree resolving that lawsuit and the subsequent extension agreed to by the parties. The schedule presented in the original consent decree that governs this review, entered by the court on November 19, 2007, was revised on October 22, 2009 to allow for a 17-month extension of the schedule. The current decree provides that EPA sign for publication notices of proposed and final rulemaking concerning its review of the oxides of nitrogen and oxides of sulfur NAAQS no later than July 12, 2011 and March 20, 2012, respectively.

This action presents the Administrator's proposed decisions on the review of the current secondary oxides of nitrogen and oxides of sulfur standards. Throughout this preamble a number of conclusions, findings, and determinations proposed by the Administrator are noted. While they identify the reasoning that supports this proposal, they are only proposals and are not intended to be final or conclusive in nature. The EPA invites general, specific, and/or technical

[2] *Center for Biological Diversity, et al.* v. *Johnson, No. 05–1814 (D.D.C.)*

comments on all issues involved with this proposal, including all such proposed judgments, conclusions, findings, and determinations.

E. Scope of the Current Review

In conducting this periodic review of the secondary NAAQS for oxides of nitrogen and oxides of sulfur, as discussed in the IRP and REA, EPA decided to assess the scientific information, associated risks, and standards relevant to protecting the public welfare from adverse effects associated jointly with oxides of nitrogen and sulfur. Although EPA has historically adopted separate secondary standards for oxides of nitrogen and oxides of sulfur, EPA is conducting a joint review of these standards because oxides of nitrogen and sulfur, and their associated transformation products are linked from an atmospheric chemistry perspective, as well as from an environmental effects perspective. The National Research Council (NRC) has recommended that EPA consider multiple pollutants, as appropriate, in forming the scientific basis for the NAAQS (NRC, 2004). As discussed in the ISA and REA, there is a strong basis for considering these pollutants together, building upon EPA's past recognition of the interactions of these pollutants and on the growing body of scientific information that is now available related to these interactions and associated ecological effects.

In defining the scope of this review, it must be considered that EPA has set secondary standards for two other criteria pollutants related to oxides of nitrogen and sulfur: Ozone and particulate matter (PM). Oxides of nitrogen are precursors to the formation of ozone in the atmosphere, and under certain conditions, can combine with atmospheric ammonia to form ammonium nitrate, a component of fine PM. Oxides of sulfur are precursors to the formation of particulate sulfate, which is a significant component of fine PM in many parts of the U.S. There are a number of welfare effects directly associated with ozone and fine PM, including ozone-related damage to vegetation and PM-related visibility impairment. Protection against those effects is provided by the ozone and fine PM secondary standards. This review focuses on evaluation of the protection provided by secondary standards for oxides of nitrogen and sulfur for two general types of effects: (1) Direct effects on vegetation associated with exposure to gaseous oxides of nitrogen and sulfur in the ambient air, which are the effects that the current NO_2 and SO_2 secondary standards protect against; and (2) effects associated with the deposition of oxides of nitrogen and sulfur to sensitive aquatic and terrestrial ecosystems, including deposition in the form of particulate nitrate and particulate sulfate.

The ISA focuses on the ecological effects associated with deposition of ambient oxides of nitrogen and sulfur to natural sensitive ecosystems, as distinguished from commercially managed forests and agricultural lands. This focus reflects the fact that the majority of the scientific evidence regarding acidification and nutrient enrichment is based on studies in unmanaged ecosystems. Non-managed terrestrial ecosystems tend to have a higher fraction of nitrogen deposition resulting from atmospheric nitrogen (US EPA, 2008, section 3.3.2.5). In addition, the ISA notes that agricultural and commercial forest lands are routinely fertilized with amounts of nitrogen that exceed air pollutant inputs even in the most polluted areas (US EPA, 2008, section 3.3.9). This review recognizes that the effects of nitrogen deposition in managed areas are viewed differently from a public welfare perspective than are the effects of nitrogen deposition in natural, unmanaged ecosystems, largely due to the more homogeneous, controlled nature of species composition and development in managed ecosystems and the potential for benefits of increased productivity in those ecosystems.

In focusing on natural sensitive ecosystems, the PA primarily considers the effects of ambient oxides of nitrogen and sulfur via deposition on multiple ecological receptors. The ISA highlights effects including those associated with acidification and nitrogen nutrient enrichment. With a focus on these deposition-related effects, EPA's objective is to develop a framework for oxides of nitrogen and sulfur standards that incorporates ecologically relevant factors and that recognizes the interactions between the two pollutants as they deposit to sensitive ecosystems. The overarching policy objective is to develop a secondary standard(s) based on the ecological criteria described in the ISA and the results of the assessments in the REA, and consistent with the requirement of the CAA to set secondary standards that are requisite to protect the public welfare from any known or anticipated adverse effects associated with the presence of these air pollutants in the ambient air. Consistent with the CAA, this policy objective includes consideration of ''variable factors * * * which of themselves or in combination with other factors may alter the effects on public welfare'' of the criteria air pollutants included in this review.

In addition, we have chosen to focus on the effects of ambient oxides of nitrogen and sulfur on ecological impacts on sensitive aquatic ecosystems associated with acidifying deposition of nitrogen and sulfur, which is a transformation product of ambient oxides of nitrogen and sulfur. Based on the information in the ISA, the assessments presented in the REA, and advice from CASAC on earlier drafts of this PA (Russell and Samet, 2010a, 2010b), and as discussed in detail in the PA, we have the greatest confidence in the causal linkages between oxides of nitrogen and sulfur and aquatic acidification effects relative to other deposition-related effects, including terrestrial acidification and aquatic and terrestrial nutrient enrichment.

II. Rationale for Proposed Decision on the Adequacy of the Current Secondary Standards

Decisions on retaining or revising the current secondary standards for oxides of nitrogen and sulfur are largely public welfare policy judgments based on the Administrator's informed assessment of what constitutes requisite protection against adverse effects to public welfare. A public welfare policy decision should draw upon scientific information and analyses about welfare effects, exposure and risks, as well as judgments about the appropriate response to the range of uncertainties that are inherent in the scientific evidence and analyses. The ultimate determination as to what level of damage to ecosystems and the services provided by those ecosystems is adverse to public welfare is not wholly a scientific question, although it is informed by scientific studies linking ecosystem damage to losses in ecosystem services, and information on the value of those losses of ecosystem services. In reaching such decisions, the Administrator seeks to establish standards that are neither more nor less stringent than necessary for this purpose.

This section presents the rationale for the Administrator's proposed conclusions with regard to the adequacy of protection and ecological relevance of the current secondary standards for oxides of nitrogen and sulfur. As discussed more fully below, this rationale considered the latest scientific information on ecological effects associated with the presence of oxides of nitrogen and oxides of sulfur in the ambient air. This rationale also takes into account: (1) Staff assessments of the most policy-relevant information in the ISA and staff analyses of air quality,

exposure, and ecological risks, presented more fully in the REA and in the PA, upon which staff conclusions on revisions to the secondary oxides of nitrogen and oxides of sulfur standards are based; (2) CASAC advice and recommendations, as reflected in discussions of drafts of the ISA, REA, and PA at public meetings, in separate written comments, and in CASAC's letters to the Administrator; and (3) public comments received during the development of these documents, either in connection with CASAC meetings or separately.

In developing this rationale, EPA has drawn upon an integrative synthesis of the entire body of evidence, published through early 2008, on ecological effects associated with the deposition of oxides of nitrogen and oxides of sulfur in the ambient air (US EPA, 2008). As discussed below in section II.A, this body of evidence addresses a broad range of ecological endpoints associated with ambient levels of oxides of nitrogen and oxides of sulfur. In considering this evidence, EPA focuses on those ecological endpoints, such as aquatic acidification, for which the ISA judges associations with oxides of nitrogen and oxides of sulfur to be causal, likely causal, or for which the evidence is suggestive that oxides of nitrogen and/or sulfur contribute to the reported effects. The categories of causality determinations have been developed in the ISA (US EPA, 2008) and are discussed in Section 1.6 of the ISA.

Crucial to this review is the development of a form for an ecologically relevant standard that reflects both the geographically variable and deposition-dependent nature of the effects. The atmospheric levels of oxides of nitrogen and sulfur that afford a particular level of ecosystem protection are those levels that result in an amount of deposition that is less than the amount of deposition that a given ecosystem can accept without defined levels of degradation.

Drawing from the framework developed in the REA, the framework we used to structure an ecologically meaningful secondary standard in the PA and to further develop the indicator, form, level, and averaging time of such a standard in section III of this proposal is depicted below and highlights the three key linkages that need to be considered in developing an ecologically relevant standard.

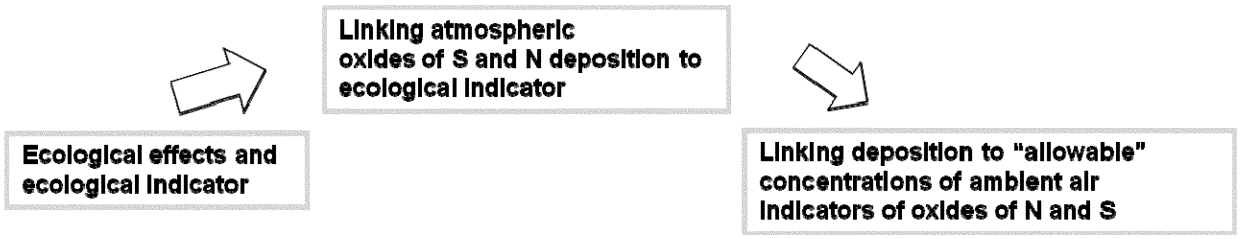

Figure II-1. Simplified conceptual design of the form of an aquatic acidification standard for oxides of nitrogen and sulfur.

The following discussion relies heavily on chapters 2 and 3 of the PA. The PA includes staff's evaluation of the policy implications of the scientific assessment of the evidence presented and assessed in the ISA and the results of quantitative assessments based on that information presented and assessed in the REA. Taken together, this information informs staff conclusions and the development of policy options in the PA for consideration in addressing public and welfare effects associated with the presence of oxides of nitrogen and oxides of sulfur in the ambient air. Of particular note, chapter 2 of the PA presents information not repeated here that characterizes emissions, air quality, deposition and water quality. It includes discussions of the sources of nitrogen and sulfur in the atmosphere as well as current ambient air quality monitoring networks and models. Additional information in this section includes ecological modeling and water quality data sources.

Section II.A presents a discussion of the effects associated with oxides of nitrogen and sulfur in the ambient air. The discussion is organized around the types of effects being considered, including direct effects of gaseous oxides of nitrogen and sulfur, deposition-related effects related to acidification and nutrient enrichment, and other effects such as materials damage, climate-related effects and mercury methylation.

Section II.B presents a summary and discussion of the risk and exposure assessment performed for each of the four major effects categories. The REA uses case studies representing the broad geographic variability of the impacts from oxides of nitrogen and sulfur to conclude that there are ongoing adverse effects in many ecosystems from deposition of oxides of nitrogen and sulfur and that under current emissions scenarios these effects are likely to continue.

Section II.C presents a discussion of adversity linking ecological effects to measures that can be used to characterize the extent to which such effects are reasonably considered to be adverse to public welfare. This involves consideration of how to characterize adversity from a public welfare perspective. In so doing, consideration is given to the concept of ecosystem services, the evidence of effects on ecosystem services, and how ecosystem services can be linked to ecological indicators.

Section II.D presents an assessment of the adequacy of the current oxides of nitrogen and oxides of sulfur secondary standards. Consideration is given to the adequacy of protection afforded by the current standards for both direct and deposition-related effects, as well as to the appropriateness of the fundamental structure and the basic elements of the current standards for providing protection from deposition-related effects. Considerations as to the extent to which deposition-related effects that could reasonably be judged to be adverse to public welfare are occurring under current conditions which are allowed by the current standards is also considered. Discussion of the structures and basic elements of the current NO_2 and SO_2 secondary standards and whether they are adequate to protect against such effects is presented.

A. Ecological Effects

This section discusses the known or anticipated ecological effects associated with oxides of nitrogen and sulfur, including the direct effects of gas-phase exposure to oxides of nitrogen and sulfur (section II.A.1) and effects associated with deposition-related exposure (sections II.A.2 and 3). Section II.A. 2 addresses effects related to acidification of aquatic and terrestrial ecosystems and section II A.3 addresses effects related to nutrient enrichment of aquatic and terrestrial ecosystems. These sections also address questions about the nature and magnitude of ecosystem responses to reactive nitrogen and sulfur deposition, including responses related to acidification, nutrient depletion, and, in Section II.A 4 the mobilization of toxic metals in sensitive aquatic and terrestrial ecosystems. The uncertainties and limitations associated with the evidence of such effects are also discussed throughout this section.

1. Effects Associated With Gas-Phase Oxides of Nitrogen and Sulfur

Ecological effects on vegetation as discussed in earlier reviews as well as the ISA can be attributed to gas-phase oxides of nitrogen and sulfur. Acute and chronic exposures to gaseous pollutants such as SO_2, NO_2, nitric oxide (NO), nitric acid (HNO_3) and peroxyacetyl nitrite (PAN) are associated with negative impacts to vegetation. The current secondary NAAQS were set to protect against direct damage to vegetation by exposure to gas-phase oxides of nitrogen and sulfur, such as foliar injury, decreased photosynthesis, and decreased growth. The following summary is a concise overview of the known or anticipated effects to vegetation caused by gas phase nitrogen and sulfur. Most phototoxic effects associated with gas phase oxides of nitrogen and sulfur occur at levels well above ambient concentrations observed in the U.S. (US EPA, 2008, section 3.4.2.4).

a. Nature of Ecosystem Responses to Gas-Phase Nitrogen And Sulfur

The 2008 ISA found that gas phase nitrogen and sulfur are associated with direct phytotoxic effects (US EPA, 2008, section 4.4). The evidence is sufficient to infer a causal relationship between exposure to SO_2 and injury to vegetation (US EPA, 2008, section 4.4.1 and 3.4.2.1). Acute foliar injury to vegetation from SO_2 may occur at levels above the current secondary standard (3-h average of 0.50 ppm). Effects on growth, reduced photosynthesis and decreased yield of vegetation are also associated with increased SO_2 exposure concentration and time of exposure.

The evidence is sufficient to infer a causal relationship between exposure to NO, NO_2 and PAN and injury to vegetation (US EPA, 2008, section 4.4.2 and 3.4.2.2). At sufficient concentrations, NO, NO_2 and PAN can decrease photosynthesis and induce visible foliar injury to plants. Evidence is also sufficient to infer a causal relationship between exposure to HNO_3 and changes to vegetation (US EPA, 2008, section 4.4.3 and 3.4.2.3). Phytotoxic effects of this pollutant include damage to the leaf cuticle in vascular plants and disappearance of some sensitive lichen species.

b. Magnitude of Ecosystem Response to Gas-Phase Nitrogen And Sulfur

Vegetation in ecosystems near sources of gaseous oxides of nitrogen and sulfur or where SO_2, NO, NO_2, PAN and HNO_3 are most concentrated are more likely to be impacted by these pollutants. Uptake of these pollutants in a plant canopy is a complex process involving adsorption to surfaces (leaves, stems and soil) and absorption into leaves (US EPA, 2008, section 3.4.2). The functional relationship between ambient concentrations of gas phase oxides of nitrogen and sulfur and specific plant response are impacted by internal factors such as rate of stomatal conductance and plant detoxification mechanisms, and external factors including plant water status, light, temperature, humidity, and pollutant exposure regime (US EPA, 2008, section 3.4.2).

Entry of gases into a leaf is dependent upon physical and chemical processes of gas phase as well as to stomatal aperture. The aperture of the stomata is controlled largely by the prevailing environmental conditions, such as water availability, humidity, temperature, and light intensity. When the stomata are closed, resistance to gas uptake is high and the plant has a very low degree of susceptibility to injury. Mosses and lichens do not have a protective cuticle barrier to gaseous pollutants or stomata and are generally more sensitive to gaseous sulfur and nitrogen than vascular plants (US EPA, 2008, section 3.4.2).

The appearance of foliar injury can vary significantly across species and growth conditions affecting stomatal conductance in vascular plants (US EPA, 2009, section 6.4.1). For example, damage to lichens from SO_2 exposure includes decreased photosynthesis and respiration, damage to the algal component of the lichen, leakage of electrolytes, inhibition of nitrogen fixation, decreased potassium (K+) absorption, and structural changes.

The phytotoxic effects of gas phase oxides of nitrogen and sulfur are dependent on the exposure concentration and duration and species sensitivity to these pollutants. Effects to vegetation associated with oxides of nitrogen and sulfur are therefore variable across the U.S. and tend to be higher near sources of photochemical smog. For example, SO_2 is considered to be the primary factor contributing to the death of lichens in many urban and industrial areas.

The ISA states there is very limited new research on phytotoxic effects of NO, NO_2, PAN and HNO_3 at concentrations currently observed in the U.S. with the exception of some lichen species (US EPA, 2008, section 4.4). Past and current HNO_3 concentrations may be contributing to the decline in lichen species in the Los Angeles basin. Most phytotoxic effects associated with gas phase oxides of nitrogen and sulfur occur at levels well above ambient concentrations observed in the U.S. (US EPA, 2008, section 3.4.2.4).

2. Acidification Effects Associated With Deposition of Oxides of Nitrogen and Sulfur

Sulfur oxides and nitrogen oxides in the atmosphere undergo a complex mix of reactions in gaseous, liquid, and solid phases to form various acidic compounds. These acidic compounds are removed from the atmosphere through deposition: either wet (*e.g.,* rain, snow), fog or cloud, or dry (*e.g.,* gases, particles). Deposition of these acidic compounds to ecosystems can lead to effects on ecosystem structure and function. Following deposition, these compounds can, in some instances, unless retained by soil or biota, leach out of the soils in the form of sulfate (SO_4^{2-}) and nitrate (NO_3^-), leading to the acidification of surface waters. The effects on ecosystems depend on the magnitude and rate of deposition, as well as a host of biogeochemical processes occurring in the soils and water bodies (US EPA, 2009, section 2.1). The chemical forms of nitrogen that may contribute to acidifying deposition include both oxidized and reduced chemical species, including reduced forms of nitrogen (NH_x).

When sulfur or nitrogen leaches from soils to surface waters in the form of SO_4^{2-} or NO_3^-, an equivalent amount of positive cations, or countercharge, is also transported. This maintains electroneutrality. If the countercharge is provided by base cations, such as

calcium (Ca^{2+}), magnesium (Mg^{2+}), sodium (Na^{+}), or K^{+}, rather than hydrogen (H^{+}) and dissolved inorganic aluminum, the acidity of the soil water is neutralized, but the base saturation of the soil decreases. Continued SO_4^2 or NO_3^- leaching can deplete the available base cation pool in soil. As the base cations are removed, continued deposition and leaching of SO_4^{2-} and/or NO_3^- (with H^+ and Al^{3+}) leads to acidification of soil water, and by connection, surface water. Introduction of strong acid anions such as sulfate and nitrate to an already acidic soil, whether naturally or due to anthropogenic activities, can lead to instantaneous acidification of waterbodies through direct runoff without any significant change in base cation saturation. The ability of a watershed to neutralize acidic deposition is determined by a variety of biogeophysical factors including weathering rates, bedrock composition, vegetation and microbial processes, physical and chemical characteristics of soils and hydrologic flowpaths (US EPA, 2009, section 2.1). Some of these factors such as vegetation and soil depth are highly variable over small spatial scales such as meters, but can be aggregated to evaluate patterns over larger spatial scales. Acidifying deposition of oxides of nitrogen and sulfur and the chemical and biological responses associated with these inputs vary temporally. Chronic or long-term deposition processes in the time scale of years to decades result in increases in inputs of nitrogen and sulfur to ecosystems and the associated ecological effects. Episodic or short term (*i.e.,* hours or days) deposition refers to events in which the level of the acid neutralizing capacity (ANC) of a lake or stream is temporarily lowered. In aquatic ecosystems, short-term (*i.e.,* hours or days) episodic changes in water chemistry can have significant biological effects. Episodic acidification refers to conditions during precipitation or snowmelt events when proportionately more drainage water is routed through upper soil horizons that tend to provide less acid neutralizing than is passing through deeper soil horizons (US EPA, 2009, section 4.2). In addition, the accumulated sulfate and nitrate in snow packs can provide a surge of acidic inputs. Some streams and lakes may have chronic or base flow chemistry that is suitable for aquatic biota, but may be subject to occasional acidic episodes with deleterious consequences to sensitive biota.

The following summary is a concise overview of the known or anticipated effects caused by acidification to ecosystems within the U.S. Acidification affects both terrestrial and freshwater aquatic ecosystems.

a. Nature of Acidification-Related Ecosystem Responses

The ISA concluded that deposition of oxides of nitrogen and sulfur and NH_x leads to the varying degrees of acidification of ecosystems (US EPA, 2008). In the process of acidification, biogeochemical components of terrestrial and freshwater aquatic ecosystems are altered in a way that leads to effects on biological organisms. Deposition to terrestrial ecosystems often moves through the soil and eventually leaches into adjacent water bodies.

i. Aquatic Ecosystems

The scientific evidence is sufficient to infer a causal relationship between acidifying deposition and effects on biogeochemistry and biota in aquatic ecosystems (US EPA, 2008, section 4.2.2). The strongest evidence comes from studies of surface water chemistry in which acidic deposition is observed to alter sulfate and nitrate concentrations in surface waters, the sum of base cations, ANC, dissolved inorganic aluminum and pH (US EPA, 2008, section 3.2.3.2). The ANC is a key indicator of acidification with relevance to both terrestrial and aquatic ecosystems. The ANC is useful because it integrates the overall acid-base status of a lake or stream and reflects how aquatic ecosystems respond to acidic deposition over time. There is also a relationship between ANC and the surface water constituents that directly contribute to or ameliorate acidity-related stress, in particular, concentrations of hydrogen ion (as pH), Ca^{2+} and aluminum (Al). Moreover, low pH surface waters leach aluminum from soils, which is quite lethal to fish and other aquatic organisms. In aquatic systems, there is a direct relationship between ANC and fish and phyto-zooplankton diversity and abundance.

Low ANC coincides with effects on aquatic systems (*e.g.,* individual species fitness loss or death, reduced species richness, altered community structure). At the community level, species richness is positively correlated with pH and ANC because energy cost in maintaining physiological homeostasis, growth, and reproduction is high at low ANC levels. For example, there is a logistic relationship between fish species richness and ANC class for Adirondack Case Study Area lakes that indicates the probability of occurrence of an organism for a given value of ANC. Biota are generally not harmed when ANC values are >100 microequivalents per liter (μeq/L). The number of fish species also peaks at ANC values >100 μeq/L. Below 100 μeq/L ANC, fish fitness and community diversity begin to decline (US EPA, section 4.2). Specifically at ANC levels between 100 and 50 μeq/L, the fitness of sensitive species (*e.g.,* brook trout, zooplankton) begins to decline. When ANC concentrations are <50 μeq/L, they are generally associated with death or loss of fitness of biota that are sensitive to acidification.

Consistent and coherent documentation from multiple studies on various species from all major trophic levels of aquatic systems shows that geochemical alteration caused by acidification can result in the loss of acid-sensitive biological species (US EPA, 2008, section 3.2.3.3). This is most often discussed with relation to pH. For example, in the Adirondacks, of the 53 fish species recorded in Adirondack lakes about half (26 species) were absent from lakes with pH below 6.0. Biological effects are linked to changes in water chemistry including decreases in ANC and pH and increases in inorganic Al concentration. The direct biological effects are caused by lowered pH which leads to increased inorganic Al concentrations (US EPA, 2011, Figures 3–1 and 3–2). While ANC level does not cause direct biological harm it is a good overall indicator of the risk of acidification (US EPA, 2011, section 3.1.3).

There are clear associations between ANC, pH and aquatic species mortality and health which are summarized in section 3.1.1 of the PA. Significant harm to sensitive aquatic species has been observed at pH levels below 6. Normal stream pH levels with little to no toxicity range from 6 to 7 (MacAvoy et al, 1995). Baker et al (1990) observed that ''lakes with pH less than approximately 6.0 contain significantly fewer species than lakes with pH levels above 6.0.'' As noted in Chapter 3, typically at pH <4.5 and an ANC <0 μeq/L, complete to near-complete loss of many taxa of organisms occur, including fish and aquatic insect populations, whereas other taxa are reduced to only acidophilic species. Acid Neutralizing Capacity is a measure of how much acid can be neutralized in a specific surface water system. An ANC value of 0 or below means that surface waters have no ability to neutralize any additional acid inputs.

Additional evidence can help refine the understanding of effects occurring at pH levels between 4.5 and 6. When pH levels are below 5.6, relatively lower trout survival rates were observed in the

Shenandoah National Park. In field observations, when pH levels dropped to 5, mortality rates went to 100 percent (Bulger et al, 2000). At pH levels ranging from 5.4 to 5.8, cumulative mortality continues to increase. Several studies have shown that trout exposed to water with varying pH levels and fish larvae showed increasing mortality as pH levels decrease. In one study almost 100 percent mortality was observed at a pH of 4.5 compared to almost 100 percent survival at a pH of 6.5. Intermediate pH values (6.0, 5.5) in all cases showed reduced survival compared with the control (6.5), but not by statistically significant amounts (US EPA, 2008, section 3.2.3.3).

One important indicator of acid stress is increased fish mortality. The response of fish to pH is not uniform across species. A number of synoptic surveys indicated loss of species diversity and absence of several fish species in the pH range of 5.0 to 5.5. If pH is lower, there is a greater likelihood that more fish species could be lost without replacement, resulting in decreased richness and diversity. In general, populations of salmonids are not found at pH levels less than 5.0, and smallmouth bass (*Micropterus dolomieu*) populations are usually not found at pH values less than about 5.2 to 5.5. From Table 3–1, only one study showed significant mortality effects above a pH of 6, while a number of studies showed significant mortality when pH levels are at or below 5.5.

The highest pH level for any of the studies reported in the ISA is 6.0, suggesting that pH above 6.0 is protective against mortality effects for most species. Most thresholds are in the range of pH of 5.0 to 6.0, which suggests that a target pH should be no lower than 5.0. Protection against mortality in some recreationally important species such as lake trout (pH threshold of 5.6) and crappie (pH threshold of 5.5), combined with the evidence of effects on larval and embryo survival suggests that pH levels greater than 5.5 should be targeted to provide protection against mortality effects throughout the life stages of fish.

Non-lethal effects have been observed at pH levels as high as 6. A study in the Shenandoah National Park found that the condition factor, a measure of fish health expressed as fish weight/length multiplied by a scaling constant, is positively correlated with stream pH levels, and that the condition factor is reduced in streams with a pH of 6.0 (US EPA, 2008, section 3.2.3.3).

Biodiversity is another indicator of aquatic ecosystem health. A key study in the Adirondacks found that lakes with a pH of 6.0 had only half the potential species of fish (27 of 53 potential species). There is often a positive relationship between pH and number of fish species, at least for pH values between about 5.0 and 6.5, or ANC values between about 0 to 100 μeq/L. Such observed relationships are complicated, however, by the tendency for smaller lakes and streams, having smaller watersheds, to also support fewer fish species, irrespective of acid-base chemistry. This pattern may be due to a decrease in the number of available niches as stream or lake size decreases. Nevertheless, fish species richness is relatively easily determined and is one of the most useful indicators of biological effects of surface water acidification.

Changes in stream water pH and ANC also contribute to declines in taxonomic richness of zooplankton, and macroinvertebrates which are often sources of food for fish, birds and other animal species in various ecosystems. These fish may also serve as a source of food and recreation for humans. Acidification of ecosystems has been shown to disrupt food web dynamics causing alteration to the diet, breeding distribution, and reproduction of certain species of birds (US EPA, 2008, section 4.2.2.2. and Table 3–9). For example, breeding distribution of the common goldeneye (*Bucephala clangula*), an insectivorous duck, may be affected by changes in acidifying deposition. Similarly, decreases in prey diversity and quantity have been observed to create feeding problems for nesting pairs of loons on low-pH lakes in the Adirondacks.

ii. Terrestrial Ecosystems

In terrestrial ecosystems, the evidence is sufficient to infer a causal relationship between acidifying deposition and changes in biogeochemistry (US EPA, 2008, section 4.2.1.1). The strongest evidence comes from studies of forested ecosystems, with supportive information on other plant taxa, including shrubs and lichens (US EPA, 2008, section 3.2.2.1.). Three useful indicators of chemical changes and acidification effects on terrestrial ecosystems, showing consistency and coherence among multiple studies are: soil base saturation, Al concentrations in soil water, and soil carbon to nitrogen (C:N) ratio (US EPA, 2008, section 3.2.2.2).

As discussed in the ISA and REA, in soils with base saturation less than about 15 to 20 percent, exchange chemistry is dominated by Al. Under these conditions, responses to inputs of sulfuric acid and HNO_3 largely involve the release and mobilization of dissolved inorganic Al. The effect can be neutralized by weathering from geologic parent material or base cation exchange. The Ca^{2+} and Al concentrations in soil water are strongly influenced by soil acidification and both have been shown to have quantitative links to tree health, including Al interference with Ca^{2+} uptake and Al toxicity to roots. Effects of nitrification and associated acidification and cation leaching have been consistently shown to occur only in soils with a C:N ratio below about 20 to 25.

Soil acidification caused by acidic deposition has been shown to cause decreased growth and increased susceptibility to disease and injury in sensitive tree species. Red spruce (*Picea rubens*) dieback or decline has been observed across high elevation areas in the Adirondack, Green and White mountains. The frequency of freezing injury to red spruce needles has increased over the past 40 years, a period that coincided with increased emissions of sulfur and nitrogen oxides and increased acidifying deposition. Acidifying deposition can contribute to dieback in sugar maple (*Acer saccharum*) through depletion of cations from soil with low levels of available Ca. Grasslands are likely less sensitive to acidification than forests due to grassland soils being generally rich in base cations.

iii. Ecosystem Sensitivity

The intersection between current deposition loading, historic loading and sensitivity defines the ecological vulnerability to the effects of acidification. Freshwater aquatic and some terrestrial ecosystems, notably forests, are the ecosystem types which are most sensitive to acidification. The ISA reports that the principal factor governing the sensitivity of terrestrial and aquatic ecosystems to acidification from sulfur and nitrogen deposition is geology (particularly surficial geology). Geologic formations having low base cation supply generally underlie the watersheds of acid-sensitive lakes and streams. Other factors that contribute to the sensitivity of soils and surface waters to acidifying deposition include topography, soil chemistry, land use, and hydrologic flowpaths. Episodic and chronic acidification tends to occur in areas that have base-poor bedrock, high relief, and shallow soils (US EPA, 2008, section 3.2.4.1).

b. Magnitude of Acidification-Related Ecosystem Responses

Terrestrial and aquatic ecosystems differ in their response to acidifying

deposition. Therefore the magnitude of ecosystem response is described separately for aquatic and terrestrial ecosystems in the following sections. The magnitude of response refers to both the severity of effects and the spatial extent of the U.S. which is affected.

i. Aquatic Acidification

Freshwater ecosystem surveys and monitoring in the eastern U.S. have been conducted by many programs since the mid-1980s, including EPA's Environmental Monitoring and Assessment Program (EMAP), National Surface Water Survey (NSWS), Temporally Integrated Monitoring of Ecosystems (TIME), and Long-term Monitoring (LTM) programs. Based on analyses of surface water data from these programs, New England, the Adirondack Mountains, the Appalachian Mountains (northern Appalachian Plateau and Ridge/Blue Ridge region) and the Upper Midwest contain the most sensitive lakes and streams (*i.e.,* ANC less than about 50 μeq/L). Portions of northern Florida also contain many acidic and low-ANC lakes and streams, although the role of acidifying deposition in this region is less clear. The western U.S. contains many of the surface waters most sensitive to potential acidification effects, but with the exception of the Los Angeles Basin and surrounding areas, the levels of acidifying deposition are low in most areas. Therefore, acidification of surface waters by acidic deposition is not as prevalent in the western U.S., and the extent of chronic surface water acidification that has occurred in that region to date has likely been very limited relative to the Eastern U.S. (US EPA, 2008, section 3.2.4.2 and US EPA, 2009, section 4.2.2).

There are a number of species including fish, aquatic insects, other invertebrates and algae that are sensitive to acidification and cannot survive, compete or reproduce in acidic waters (US EPA, 2008, section 3.2.3.3). Decreases in ANC and pH have been shown to contribute to declines in species richness and declines in abundance of zooplankton, macroinvertebrates, and fish. Reduced growth rates have been attributed to acid stress in a number of fish species including Atlantic salmon (*Salmo salar*), Chinook salmon (*Oncorhynchus tshawytscha*), lake trout (*Salvelinus namaycush*), rainbow trout (*Oncorhynchis mykiss*), brook trout (*Salvelinus Fontinalis*), and brown trout (*Salmo trutta*). In response to small to moderate changes in acidity, acid-sensitive species are often replaced by other more acid-tolerant species, resulting in changes in community composition and richness. The effects of acidification are continuous, with more species being affected at higher degrees of acidification. At a point, typically a pH <4.5 and an ANC <0 μeq/L, complete to near-complete loss of many taxa of organisms occur, including fish and aquatic insect populations, whereas other taxa are reduced to only acidophilic species. These changes in taxa composition are associated with the high energy cost in maintaining physiological homeostasis, growth, and reproduction at low ANC levels (US EPA, 2008, section 3.2.3.3). Decreases in species richness related to acidification have been observed in the Adirondack Mountains and Catskill Mountains of New York, New England and Pennsylvania, and Virginia. From the sensitive areas identified by the ISA, further ''case study'' analyses on aquatic ecosystems in the Adirondack Mountains and Shenandoah National Park were conducted to better characterize ecological risk associated with acidification (US EPA, 2009, section 4).

The ANC is the most widely used indicator of acid sensitivity and has been found in various studies to be the best single indicator of the biological response and health of aquatic communities in acid-sensitive systems (Lien et al., 1992; Sullivan et al., 2006; US EPA, 2008). In the REA, surface water trends in SO_4^{2-} and NO_3^- concentrations and ANC levels were analyzed to affirm the understanding that reductions in deposition could influence the risk of acidification. The ANC values have been categorized according to their effects on biota, as shown in the table below. Monitoring data from TIME/LTM and EMAP programs were assessed for the years 1990 to 2006, and past, present and future water quality levels were estimated by both steady-state and dynamic biogeochemical models.

TABLE II–1—ECOLOGICAL EFFECTS ASSOCIATED WITH ALTERNATIVE LEVELS OF ACID NEUTRALIZING CAPACITY (ANC)

[Source: USEPA, Acid Rain Program]

Category Label	ANC Levels	Expected Ecological Effects
Acute Concern	<0 μeq/L	Complete loss of fish populations is expected. Planktonic communities have extremely low diversity and are dominated by acidophilic taxa. The numbers of individuals in plankton species that are present are greatly reduced.
Severe Concern	0–20 μeq/L	Highly sensitive to episodic acidification. During episodes of high acidifying deposition, brook trout populations may experience lethal effects. The diversity and distribution of zooplankton communities decline sharply.
Elevated Concern	20–50 μeq/L	Fish species richness is greatly reduced (*i.e.,* more than half of expected species can be missing). On average, brook trout populations experience sublethal effects, including loss of health, ability to reproduce, and fitness. Diversity and distribution of zooplankton communities decline.
Moderate Concern	50–100 μeq/L	Fish species richness begins to decline (*i.e.,* sensitive species are lost from lakes). Brook trout populations are sensitive and variable, with possible sublethal effects. Diversity and distribution of zooplankton communities also begin to decline as species that are sensitive to acidifying deposition are affected.
Low Concern	>100 μeq/L	Fish species richness may be unaffected. Reproducing brook trout populations are expected where habitat is suitable. Zooplankton communities are unaffected and exhibit expected diversity and distribution.

Studies on fish species richness in the Adirondacks Case Study Area demonstrated the effect of acidification. Of the 53 fish species recorded in Adirondack Case Study Area lakes, only 27 species were found in lakes with a pH <6.0. The 26 species missing from lakes with a pH <6.0 include important recreational species, such as Atlantic salmon, tiger trout (*Salmo trutta* X *Salvelinus fontinalis*), redbreast sunfish (*Lepomis auritus*), bluegill (*Lepomis macrochirus*), tiger musky (*Esox masquinongy* X *lucius*), walleye (*Sander vitreus*), alewife (*Alosa pseudoharengus*), and kokanee (*Oncorhynchus nerka*), as well as ecologically important minnows that are commonly consumed by sport fish. A survey of 1,469 lakes in the late 1980s found 346 lakes to be devoid of fish. Among lakes with fish, there was a relationship between the number of fish species and lake pH, ranging from about one species per lake for lakes having a pH <4.5 to about six species per lake for lakes having a pH >6.5. In the Adirondacks, a positive relationship exists between the pH and ANC in lakes and the number of fish species present in those lakes (US EPA, 2008, section 3.2.3.4).

Since the mid-1990s, streams in the Shenandoah Case Study Area have shown slight declines in NO_3^- and SO_4^{2-} concentrations in surface waters. The 2006 concentrations are still above pre-acidification (1860) conditions. Model of Acidification of Groundwater in Catchments (MAGIC) modeling predicts surface water concentrations of NO_3^- and SO_4^{2-} are 10- and 32-fold higher, respectively, in 2006 than in 1860. The estimated average ANC across 60 streams in the Shenandoah Case Study Area is 57.9 μeq/L (± 4.5 μeq/L). Fifty-five percent of all monitored streams in the Shenandoah Case Study Area have a current risk of Elevated, Severe, or Acute. Of the 55 percent, 18 percent are chronically acidic today (US EPA, 2009, section 4.2.4.3).

Based on a deposition scenario for this study area that maintains current emission levels from 2020 to 2050, the simulation forecast indicates that a large number of streams would still have Elevated to Acute problems with acidity in 2050.

Biological effects of increased acidification documented in the Shenandoah Case Study Area include a decrease in the condition factor in blacknose dace and a decrease in fish biodiversity associated with decreasing stream ANC. On average, the fish species richness is lower by one fish species for every 21 μeq/L decrease in ANC in Shenandoah National Park streams (US EPA, 2008, section 3.2.3.4).

ii. Terrestrial Acidification

The ISA identified a variety of indicators that can be used to measure the effects of acidification in soils. Most effects of terrestrial acidification are observed in sensitive forest ecosystem in the U.S. Tree health has been linked to the availability of base cations (BC) in soil (such as Ca^{2+}, Mg^{2+} and K^+), as well as soil aluminum (Al) content. Tree species show a range of sensitivities to Ca/Al and BC/Al soil molar ratios, therefore these are good chemical indicators because they directly relate to the biological effects. Critical BC/Al molar ratios for a large variety of tree species ranged from 0.2 to 0.8. This range is similar to critical ratios of Ca/Al. Plant toxicity or nutrient antagonism was reported to occur at Ca/Al molar ratios ranging from 0.2 to 2.5 (US EPA, 2009).

There has been no systematic national survey of terrestrial ecosystems to determine the extent and distribution of terrestrial ecosystem sensitivity to the effects of acidifying deposition. However, one preliminary national evaluation estimated that ~15 percent of forest ecosystems in the U.S. exceed the estimated critical load based on soil ANC leaching for sulfur and nitrogen deposition by >250 eq/ha/yr (McNulty et al., 2007). Forests of the Adirondack Mountains of New York, Green Mountains of Vermont, White Mountains of New Hampshire, the Allegheny Plateau of Pennsylvania and high-elevation forest ecosystems in the southern Appalachians are the regions most sensitive to terrestrial acidification effects from acidifying deposition (US EPA, 2008, section 3.2.4.2). While studies show some recovery of surface waters, there are widespread measurements of ongoing depletion of exchangeable base cations in forest soils in the northeastern U.S. despite recent decreases in acidifying deposition, indicating a slow recovery time.

In the REA, a critical load analysis was performed for sugar maple and red spruce forests in the eastern U.S. by using BC/Al ratio in acidified forest soils as an indicator to assess the impact of nitrogen and sulfur deposition on tree health. These are the two most commonly studied tree species in North America for effects of acidification. At a BC/Al ratio of 1.2, red spruce growth can be decreased by 20 percent. Sugar maple growth can be decreased by 20 percent at a BC/Al ratio of 0.6 (US EPA, 2009, section 4.4). The REA analysis determined the health of at least a portion of the sugar maple and red spruce growing in the U.S. may have been compromised with acidifying total nitrogen and sulfur deposition. Specifically, total nitrogen and sulfur deposition levels exceeded three selected critical loads for tree growth in 3 percent to 75 percent of all sugar maple plots across 24 states—that is, it exceeded the highest (least stringent) of the three critical loads in 3 percent of plots, and the lowest (most stringent) in 75 percent of plots. For red spruce, total nitrogen and sulfur deposition levels exceeded three selected critical loads in 3 percent to 36 percent of all red spruce plots across eight states (US EPA, 2009, section 4.4).

c. Key Uncertainties Associated With Acidification

There are different levels of uncertainty associated with relationships between deposition, ecological effects and ecological indicators. In Chapter 7 of the REA, the case study analyses associated with each targeted effect area were synthesized by identifying the strengths, limitations, and uncertainties associated with the available data, modeling approach, and relationship between the selected ecological indicator and atmospheric deposition as described by the ecological effect function (US EPA, 2009, Figure 1–1). A further discussion of uncertainty in aquatic and terrestrial ecosystems is presented below. The key uncertainties were characterized as follows to evaluate the strength of the scientific basis for setting a national standard to protect against a given effect (US EPA, 2009, section 7):

(1) Data Availability: High, medium or low quality. This criterion is based on the availability and robustness of data sets, monitoring networks, availability of data that allows for extrapolation to larger assessment areas and input parameters for modeling and developing the ecological effect function. The scientific basis for the ecological indicator selected is also incorporated into this criterion.

(2) Modeling Approach: High, fairly high, intermediate, or low confidence. This value is based on the strengths and limitations of the models used in the analysis and how accepted they are by the scientific community for their application in this analysis.

(3) Ecological Effect Function: High, fairly high, intermediate or low confidence. This ranking is based on how well the ecological effect function describes the relationship between atmospheric deposition and the ecological indicator of an effect.

i. Aquatic Acidification

The REA concludes that the available data are robust and considered high quality. There is high confidence about the use of these data and their value for extrapolating to a larger regional population of lakes. The EPA TIME/LTM network represents a source of long-term, representative sampling. Data on sulfate concentrations, nitrate concentrations and ANC from 1990 to 2006 used for this analysis as well as EPA EMAP and Regional Environmental Monitoring and Assessment Program (REMAP) surveys, provide considerable data on surface water trends.

There is fairly high confidence associated with modeling and input parameters. Uncertainties in water quality estimates (*i.e.,* ANC) from MAGIC were derived from multiple site calibrations. Pre-acidification refers to retrospective modeling to estimate water quality conditions before man-made contributions of acidifying inputs. The models are evaluated under current conditions to determine how well they replicate observed ANC values. The 95 percent confidence interval for pre-acidification of lakes was an average of 15 μeq/L difference in ANC concentrations, or 10 percent, and 8 μeq/L, or 5 percent, for streams (US EPA, 2009, section 7.1.2). The use of the critical load model to estimate aquatic critical loads is limited by the uncertainties associated with runoff and surface water measurements and in estimating the catchment supply of base cations from the weathering of bedrock and soils (McNulty et al., 2007).

ii. Terrestrial Acidification

The available data used to quantify the targeted effect of terrestrial acidification are robust and considered high quality. The U.S. Forest Service-Kane Experimental Forest and significant amounts of research work in the Allegheny Plateau have produced extensive, peer-reviewed data sets. Sugar maple and red spruce were the focus of the REA since they are demonstrated to be negatively affected by soil available Ca^{2+} depletion and high concentrations of available Al, and occur in areas that receive high acidifying deposition. There is high confidence about the use of the REA terrestrial acidification data and their value for extrapolating to a larger regional population of forests.

There is high confidence associated with the models, input parameters, and assessment of uncertainty used in the case study for terrestrial acidification. The Simple Mass Balance (SMB) model, a commonly used and widely applied approach for estimating critical loads, was used in the REA analysis (US EPA, 2008, section 7.2.2). There is fairly high confidence associated with the ecological effect function developed for terrestrial acidification (US EPA, 2009, section 7.2.3).

3. Nutrient Enrichment Effects Associated With Deposition of Oxides of Nitrogen

The following summary is a concise overview of the known or anticipated effects caused by nitrogen nutrient enrichment to ecosystems within the United States. Nutrient-enrichment affects terrestrial, freshwater and estuarine ecosystems. Nitrogen deposition is a major source of anthropogenic nitrogen. For many terrestrial and freshwater ecosystems other sources of nitrogen including fertilizer and waste treatment are greater than deposition. Nitrogen deposition often contributes to nitrogen-enrichment effects in estuaries, but does not drive the effects since other sources of nitrogen greatly exceed nitrogen deposition. Both oxides of nitrogen and NH_X contribute to nitrogen deposition. For the most part, nitrogen effects on ecosystems do not depend on whether the nitrogen is in oxidized or reduced form. Thus, this summary focuses on the effects of nitrogen deposition in total.

a. Nature of Nutrient Enrichment-Related Ecosystem Responses

The ISA found that deposition of nitrogen, including oxides of nitrogen and NH_X, leads to the nitrogen enrichment of ecosystems (US EPA 2008). In the process of nitrogen enrichment, biogeochemical components of terrestrial and freshwater aquatic ecosystems are altered in a way that leads to effects on biological organisms.

i. Aquatic Ecosystems

In freshwater ecosystems, the evidence is sufficient to infer a causal relationship between nitrogen deposition and the alteration of biogeochemical cycling in freshwater aquatic ecosystems (US EPA, 2008, section 3.3.2.3). Nitrogen deposition is the main source of nitrogen enrichment to headwater streams, lower order streams and high elevation lakes. The most common chemical indicators that were studied included NO_3^{2-} and dissolved inorganic nitrogen (DIN) concentration in surface waters as well as the ratio of chlorophyll *a* to total phosphorus. Elevated surface water NO_3^- concentrations occur in both the eastern and western U.S. Studies report a significant correlation between nitrogen deposition and lake biogeochemistry by identifying a correlation between wet deposition and DIN and the ratio of chlorophyll *a* to total phosphate. Recent evidence provides examples of lakes and streams that are limited by nitrogen and show signs of eutrophication in response to nitrogen addition.

The evidence is sufficient to infer a causal relationship between nitrogen deposition and the alteration of species richness, species composition and biodiversity in freshwater aquatic ecosystems (US EPA, 2008, section 3.3.5.3). Increased nitrogen deposition can cause a shift in community composition and reduce algal biodiversity, especially in sensitive oligotrophic lakes.

In the ISA, the evidence is sufficient to infer a causal relationship between nitrogen deposition and the biogeochemical cycling of nitrogen and carbon in estuaries (US EPA, 2008, section 4.3.4.1 and 3.3.2.3). In general, estuaries tend to be nitrogen-limited, and many currently receive high levels of nitrogen input from human activities (US EPA, 2009, section 5.1.1). It is unknown if atmospheric deposition alone is sufficient to cause eutrophication; however, the contribution of atmospheric nitrogen deposition to total nitrogen load is calculated for some estuaries and can be >40 percent (US EPA, 2009, section 5.1.1).

The evidence is sufficient to infer a causal relationship between nitrogen deposition and the alteration of species richness, species composition and biodiversity in estuarine ecosystems (US EPA, 2008, section 4.3.4.2 and 3.3.5.4). Atmospheric and non-atmospheric sources of nitrogen contribute to increased phytoplankton and algal productivity, leading to eutrophication. Shifts in community composition, reduced hypolimnetic dissolved oxygen (DO), decreases in biodiversity, and mortality of submerged aquatic vegetation are associated with increased N deposition in estuarine systems.

ii. Terrestrial Ecosystems

The evidence is sufficient to infer a causal relationship between nitrogen deposition and the alteration of biogeochemical cycling in terrestrial ecosystems (US EPA, 2008, section 4.3.1.1 and 3.3.2.1). This is supported by numerous observational, deposition gradient and field addition experiments in sensitive ecosystems. The leaching of NO_3^- in soil drainage waters and the export of NO_3^- in stream water were identified as two of the primary

indictors of nitrogen enrichment. Several nitrogen-addition studies indicate that NO_3^- leaching is induced by chronic additions of nitrogen. Studies identified in the ISA found that surface water NO_3^- concentrations exceeded 1 μeq/L in watersheds receiving about 9 to 13 kg N/ha/yr of atmospheric nitrogen deposition. Nitrogen deposition disrupts the nutrient balance of ecosystems with numerous biogeochemical effects. The chemical indicators that are typically measured include NO_3^- leaching, soil C:N ratio, rates of nitrogen mineralization, nitrification, denitrification, foliar nitrogen concentration, and soil water NO_3^- and NH_4^+ concentrations. Note that nitrogen saturation (nitrogen leaching from ecosystems) does not need to occur to cause effects. Substantial leaching of NO_3^- from forest soils to stream water can acidify downstream waters, leading to effects described in the previous section on aquatic acidification. Due to the complexity of interactions between the nitrogen and carbon cycling, the effects of nitrogen on carbon budgets (quantified input and output of carbon to the ecosystem) are variable. Regional trends in net ecosystem productivity (NEP) of forests (not managed for silviculture) have been estimated through models based on gradient studies and meta-analysis. Atmospheric nitrogen deposition has been shown to cause increased litter accumulation and carbon storage in above-ground woody biomass. In the West, this has lead to increased susceptibility to more severe fires. Less is known regarding the effects of nitrogen deposition on carbon budgets of non-forest ecosystems.

The evidence is sufficient to infer a causal relationship between nitrogen deposition on the alteration of species richness, species composition and biodiversity in terrestrial ecosystems (US EPA, 2008, section 4.3.1.2). Some organisms and ecosystems are more sensitive to nitrogen deposition and effects of nitrogen deposition are not observed in all habitats. The most sensitive terrestrial taxa to nitrogen deposition are lichens. Empirical evidence indicates that lichens in the U.S. are affected by deposition levels as low as 3 kg N/ha/yr. Alpine ecosystems are also sensitive to nitrogen deposition; changes in an individual species (*Carex rupestris*) were estimated to occur at deposition levels near 4 kg N/ha/yr and modeling indicates that deposition levels near 10 kg N/ha/yr alter plant community assemblages. In several grassland ecosystems, reduced species diversity and an increase in non-native, invasive species are associated with nitrogen deposition.

iii. Ecosystem Sensitivity to Nutrient Enrichment

The numerous ecosystem types that occur across the U.S. have a broad range of sensitivity to nitrogen deposition (US EPA, 2008, Table 4–4). Increased deposition to nitrogen-limited ecosystems can lead to production increases that may be either beneficial or adverse depending on the system and management goals.

Organisms in their natural environment are commonly adapted to a specific regime of nutrient availability. Change in the availability of one important nutrient, such as nitrogen, may result in an imbalance in ecological stoichiometry, with effects on ecosystem processes, structure and function. In general, nitrogen deposition to terrestrial ecosystems causes accelerated growth rates in some species deemed desirable in commercial forests but may lead to altered competitive interactions among species and nutrient imbalances, ultimately affecting biodiversity. The onset of these effects occurs with nitrogen deposition levels as low as 3 kg N/ha/yr in sensitive terrestrial ecosystems to nitrogen deposition. In aquatic ecosystems, nitrogen that is both leached from the soil and directly deposited to the water surface can pollute the surface water. This causes alteration of the diatom community at levels as low as 1.5 kg N/ha/yr in sensitive freshwater ecosystems.

The degree of ecosystem effects lies at the intersection of nitrogen loading and nitrogen-sensitivity. Nitrogen-sensitivity is predominately driven by the degree to which growth is limited by nitrogen availability. Grasslands in the western U.S. are typically nitrogen-limited ecosystems dominated by a diverse mix of perennial forbs and grass species. A meta-analysis discussed in the ISA (US EPA, 2008, section 3.3.3), indicated that nitrogen fertilization increased aboveground growth in all non-forest ecosystems except for deserts. In other words, almost all terrestrial ecosystems are nitrogen-limited and will be altered by the addition of anthropogenic nitrogen. Likewise, a freshwater lake or stream must be nitrogen-limited to be sensitive to nitrogen-mediated eutrophication. There are many examples of fresh waters that are nitrogen-limited or nitrogen and phosphorous (P) co-limited (US EPA, 2008, section 3.3.3.2). A large dataset meta-analysis discussed in the ISA (US EPA, 2008, section 3.3.3.2), found that nitrogen-limitation occurred as frequently as phosphorous-limitation in freshwater ecosystems. Additional factors that govern the sensitivity of ecosystems to nutrient enrichment from nitrogen deposition include rates and form of nitrogen deposition, elevation, climate, species composition, plant growth rate, length of growing season, and soil nitrogen retention capacity (US EPA, 2008, section 4.3). Less is known about the extent and distribution of the terrestrial ecosystems in the U.S. that are most sensitive to the effects of nutrient enrichment from atmospheric nirogen deposition compared to acidification.

Because the productivity of estuarine and near shore marine ecosystems is generally limited by the availability of nitrogen, they are susceptible to the eutrophication effect of nitrogen deposition (US EPA, 2008, section 4.3.4.1). A recent national assessment of eutrophic conditions in estuaries found the most eutrophic estuaries were generally those that had large watershed-to-estuarine surface area, high human population density, high rainfall and runoff, low dilution and low flushing rates. In the REA, the National Oceanic and Atmospheric Administration's (NOAA) National Estuarine Eutrophication Assessment (NEEA) assessment tool, Assessment of Estuarine Tropic Status (ASSETS) categorical Eutrophication Index (EI) was used to evaluate eutrophication due to atmospheric loading of nitrogen. The ASSETS EI is an estimation of the likelihood that an estuary is experiencing eutrophication or will experience eutrophication based on five ecological indicators: Chlorophyll *a,* macroalgae, dissolved oxygen, nuisance/toxic algal blooms and submerged aquatic vegetation (SAV).

In the REA, two regions were selected for case study analysis using ASSETS EI, the Chesapeake Bay and Pamlico Sound. Both regions received an ASSETS EI rating of Bad indicating that the estuary had moderate to high pressure due to overall human influence and a moderate high to high eutrophic condition (US EPA, 2009, sections 5.2.4.1 and 5.2.4.2). These results were then considered with SPAtially Referenced Regression on Watershed Attributes (SPARROW) modeling to develop a response curve to examine the role of atmospheric nitrogen deposition in achieving a desired decrease in load. To change the Neuse River Estuary's EI score from Bad to Poor not only must 100 percent of the total atmospheric nitrogen deposition be eliminated, but considerably more nitrogen from other sources as well must be controlled (US EPA, 2009, section 5.2.7.2). In the Potomac River estuary, a 78 percent

decrease of total nitrogen could move the EI score from Bad to Poor (US EPA, 2009, section 5.2.7.1). The results of this analysis indicated decreases in atmospheric deposition alone could not eliminate coastal eutrophication problems due to multiple non-atmospheric nitrogen inputs (US EPA, 2009, section 7.3.3). However, the somewhat arbitrary discreteness of the EI scale can mask the benefits of decreases in nitrogen between categories.

In general, estuaries tend to be nitrogen-limited, and many currently receive high levels of nitrogen input from human activities to cause eutrophication. As reported in the ISA (US EPA, 2008, section 3.2.2.2), atmospheric nitrogen loads to estuaries in the U.S. are estimated to range from 2 to 8 percent for Guadalupe Bay, Texas on the lowest end to as high as 72 percent for St. Catherines-Sapelo estuary, Georgia. The Chesapeake Bay is an example of a large, well-studied and severely eutrophic estuary that is calculated to receive as much as 30 percent of its total nitrogen load from the atmosphere.

b. Magnitude of Ecosystem Responses

i. Aquatic Ecosystems

The magnitude of ecosystem response may be thought of on two time scales, current conditions and how ecosystems have been altered since the onset of anthropogenic nitrogen deposition. As noted previously, studies found that nitrogen-limitation occurs as frequently as phosphorous-limitation in freshwater ecosystems (US EPA, 2008, section 3.3.3.2). Recently, a comprehensive study of available data from the northern hemisphere surveys of lakes along gradients of nitrogen deposition show increased inorganic nitrogen concentration and productivity to be correlated with atmospheric nitrogen deposition. The results are unequivocal evidence of nitrogen limitation in lakes with low ambient inputs of nitrogen, and increased nitrogen concentrations in lakes receiving nitrogen solely from atmospheric nitrogen deposition. It has been suggested that most lakes in the northern hemisphere may have originally been nitrogen-limited, and that atmospheric nitrogen deposition has changed the balance of nitrogen and phosphorous in lakes.

Available data suggest that the increases in total nitrogen deposition do not have to be large to elicit an ecological effect. For example, a hindcasting exercise determined that the change in Rocky Mountain National Park lake algae that occurred between 1850 and 1964 was associated with an increase in wet nitrogen deposition that was only about 1.5 kg N/ha. Similar changes inferred from lake sediment cores of the Beartooth Mountains of Wyoming also occurred at about 1.5 kg N/ha deposition. Pre-industrial inorganic nitrogen deposition is estimated to have been only 0.1 to 0.7 kg N/ha based on measurements from remote parts of the world. In the western U.S., pre-industrial, or background, inorganic nitrogen deposition was estimated by to range from 0.4 to 0.7 kg N/ha/yr.

Eutrophication effects from nitrogen deposition are most likely to be manifested in undisturbed, low nutrient surface waters such as those found in the higher elevation areas of the western U.S. The most severe eutrophication from nitrogen deposition effects is expected downwind of major urban and agricultural centers. High concentrations of lake or streamwater NO_3^-, indicative of ecosystem saturation, have been found at a variety of locations throughout the U.S., including the San Bernardino and San Gabriel Mountains within the Los Angeles Air Basin, the Front Range of Colorado, the Allegheny mountains of West Virginia, the Catskill Mountains of New York, the Adirondack Mountains of New York, and the Great Smoky Mountains in Tennessee (US EPA, 2008, section 3.3.8).

In contrast to terrestrial and freshwater systems, atmospheric nitrogen load to estuaries contributes to the total load but does not necessarily drive the effects since other combined sources of nitrogen often greatly exceed nitrogen deposition. In estuaries, nitrogen-loading from multiple anthropogenic and non-anthropogenic pathways leads to water quality deterioration, resulting in numerous effects including hypoxic zones, species mortality, changes in community composition and harmful algal blooms that are indicative of eutrophication. The following summary is a concise overview of the known or anticipated effects of nitrogen enrichment on estuaries within the U.S.

There is a scientific consensus (US EPA, 2008, section 4.3.4) that nitrogen-driven eutrophication in shallow estuaries has increased over the past several decades and that the environmental degradation of coastal ecosystems due to nitrogen, phosphorus, and other inputs is now a widespread occurrence. For example, the frequency of phytoplankton blooms and the extent and severity of hypoxia have increased in the Chesapeake Bay and Pamlico estuaries in North Carolina and along the continental shelf adjacent to the Mississippi and Atchafalaya rivers' discharges to the Gulf of Mexico.

A recent national assessment of eutrophic conditions in estuaries found that 65 percent of the assessed systems had moderate to high overall eutrophic conditions. Most eutrophic estuaries occurred in the mid-Atlantic region and the estuaries with the lowest degree of eutrophication were in the North Atlantic. Other regions had mixtures of low, moderate, and high degrees of eutrophication (US EPA, 2008, section 4.3.4.3).

The mid-Atlantic region is the most heavily impacted area in terms of moderate or high loss of submerged aquatic vegetation due to eutrophication (US EPA, 2008, section 4.3.4.2). Submerged aquatic vegetation is important to the quality of estuarine ecosystem habitats because it provides habitat for a variety of aquatic organisms, absorbs excess nutrients, and traps sediments (US EPA, 2008, section 4.3.4.2). It is partly because many estuaries and near-coastal marine waters are degraded by nutrient enrichment that they are highly sensitive to potential negative impacts from nitrogen addition from atmospheric deposition.

ii. Terrestrial Ecosystems

Little is known about the full extent and distribution of the terrestrial ecosystems in the U.S. that are most sensitive to impacts caused by nutrient enrichment from atmospheric nitrogen deposition. As previously stated, most terrestrial ecosystems are nitrogen-limited, therefore they are sensitive to perturbation caused by nitrogen additions (US EPA, 2008, section 4.3.1). Effects are most likely to occur where areas of relatively high atmospheric N deposition intersect with nitrogen-limited plant communities. The alpine ecosystems of the Colorado Front Range, chaparral watersheds of the Sierra Nevada, lichen and vascular plant communities in the San Bernardino Mountains and the Pacific Northwest, and the southern California coastal sage scrub (CSS) community are among the most sensitive terrestrial ecosystems. There is growing evidence (US EPA, 2008, section 4.3.1.2) that existing grassland ecosystems in the western U.S. are being altered by elevated levels of N inputs, including inputs from atmospheric deposition.

In the eastern U.S., the degree of nitrogen saturation of the terrestrial ecosystem is often assessed in terms of the degree of NO_3^- leaching from watershed soils into ground water or surface water. Studies have estimated the number of surface waters at different

stages of saturation across several regions in the eastern U.S. Of the 85 northeastern watersheds examined 60 percent were in Stage 1 or Stage 2 of nitrogen saturation on a scale of 0 (background or pretreatment) to 3 (visible decline). Of the northeastern sites for which adequate data were available for assessment, those in Stage 1 or 2 were most prevalent in the Adirondack and Catskill Mountains. Effects on individual plant species have not been well studied in the U.S. More is known about the sensitivity of particular plant communities. Based largely on results obtained in more extensive studies conducted in Europe, it is expected that the more sensitive terrestrial ecosystems include hardwood forests, alpine meadows, arid and semi-arid lands, and grassland ecosystems (US EPA, 2008, section 3.3.5).

The REA used published research results (US EPA, 2009, section 5.3.1 and US EPA, 2008, Table 4.4) to identify meaningful ecological benchmarks associated with different levels of atmospheric nitrogen deposition. These are illustrated in Figure 3–4 of the PA. The sensitive areas and ecological indicators identified by the ISA were analyzed further in the REA to create a national map that illustrates effects observed from ambient and experimental atmospheric nitrogen deposition loads in relation to Community Multi-scale Air Quality (CMAQ) 2002 modeling results and National Atmospheric Deposition Program (NADP) monitoring data. This map, reproduced in Figure 3–5 of the PA, depicts the sites where empirical effects of terrestrial nutrient enrichment have been observed and site proximity to elevated atmospheric nitrogen deposition.

Based on information in the ISA and initial analysis in the REA, further case study analyses on terrestrial nutrient enrichment of ecosystems were developed for the CS community and Mixed Conifer Forest (MCF) (US EPA, 2009). Geographic information systems (GIS) analysis supported a qualitative review of past field research to identify ecological benchmarks associated with CSS and mycorrhizal communities, as well as MCF nutrient-sensitive acidophyte lichen communities, fine-root biomass in Ponderosa pine, and leached nitrate in receiving waters.

The ecological benchmarks that were identified for the CSS and the MCF communities are included in the suite of benchmarks identified in the ISA (US EPA, 2008, section 3.3). There are sufficient data to confidently relate the ecological effect to a loading of atmospheric nitrogen. For the CSS community, the following ecological benchmarks were identified:

(1) 3.3 kg N/ha/yr—the amount of nitrogen uptake by a vigorous stand of CSS; above this level, nitrogen may no longer be limiting
(2) 10 kg N/ha/yr—mycorrhizal community changes

For the MCF community, the following ecological benchmarks were identified:

(1) 3.1 kg N/ha/yr—shift from sensitive to tolerant lichen species
(2) 5.2 kg N/ha/yr—dominance of the tolerant lichen species
(3) 10.2 kg N/ha/yr—loss of sensitive lichen species
(4) 17 kg N/ha/yr—leaching of nitrate into streams.

These benchmarks, ranging from 3.1 to 17 kg N/ha/yr, were compared to 2002 CMAQ/NADP data to discern any associations between atmospheric deposition and changing communities. Evidence supports the finding that nitrogen alters CSS and MCF communities. Key findings include the following: 2002 CMAQ/NADP nitrogen deposition data show that the 3.3 kg N/ha/yr benchmark has been exceeded in more than 93 percent of CSS areas (654,048 ha). These deposition levels are a driving force in the degradation of CSS communities. Although CSS decline has been observed in the absence of fire, the contributions of deposition and fire to the CSS decline require further research. The CSS is fragmented into many small parcels, and the 2002 CMAQ/NADP 12-km grid data are not fine enough to fully validate the relationship between CSS distribution, nitrogen deposition, and fire. The 2002 CMAQ/NADP nitrogen deposition data exceeds the 3.1 kg N/ha/yr benchmark in more than 38 percent (1,099,133 ha) of MCF areas, and nitrate leaching has been observed in surface waters. Ozone effects confound nitrogen effects on MCF acidophyte lichen, and the interrelationship between fire and nitrogen cycling requires additional research.

c. Key Uncertainties Associated With Nutrient Enrichment

There are different levels of uncertainty associated with relationships between deposition, ecological effects and ecological indicators. The criteria used in the REA to evaluate the degree of confidence in the data, modeling and ecological effect function are detailed in chapter 7 of the REA. Below is a discussion of uncertainty relating aquatic and terrestrial ecosystems to nutrient enrichment effects.

i. Aquatic Ecosystems

The approach for assessing atmospheric contributions to total nitrogen loading in the REA was to consider the main-stem river to an estuary (including the estuary) rather than an entire estuary system or bay. The biological indicators used in the NOAA ASSETS EI required the evaluation of many national databases including the US Geological Survey National Water Quality Assessment (NAWQA) files, EPA's STORage and RETrieval (STORET) database, NOAA's Estuarine Drainage Areas data and EPA's water quality standards nutrient criteria for rivers and lakes (US EPA, 2009, Appendix 6 and Table 1.2.–1). Both the SPARROW modeling for nitrogen loads and assessment of estuary conditions under NOAA ASSETS EI, have been applied on a national scale. The REA concludes that the available data are medium quality with intermediate confidence about the use of these data and their values for extrapolating to a larger regional area (US EPA, 2009, section 7.3.1). Intermediate confidence is associated with the modeling approach using ASSETS EI and SPARROW. The REA states there is low confidence with the ecological effect function due to the results of the analysis which indicated that reductions in atmospheric deposition alone could not solve coastal eutrophication problems due to multiple non-atmospheric nitrogen inputs (US EPA, 2009, section 7.3.3).

ii. Terrestrial Ecosystems

Ecological thresholds are identified for CSS and MCF areas and these data are considered to be of high quality, however, the ability to extrapolate these data to larger regional areas is limited (US EPA, 2009, section 7.4.1). No quantitative modeling was conducted or ecological effect function developed for terrestrial nutrient enrichment reflecting the uncertainties associated with these depositional effects.

4. Other Ecological Effects

It is stated in the ISA (US EPA, 2008, section 3.4.1 and 4.5) that mercury is a highly neurotoxic contaminant that enters the food web as a methylated compound, methylmercury (MeHg). Mercury is principally methylated by sulfur-reducing bacteria and can be taken up by microorganisms, zooplankton and macroinvertebrates. The contaminant is concentrated in higher trophic levels, including fish eaten by humans. Experimental evidence has established that only inconsequential amounts of MeHg can

be produced in the absence of sulfate. Once MdHg is present, other variables influence how much accumulates in fish, but elevated mercury levels in fish can only occur where substantial amounts of MeHg are present. Current evidence indicates that in watersheds where mercury is present, increased oxides of sulfur deposition very likely results in additional production of MeHg which leads to greater accumulation of MeHg concentrations in fish. With respect to sulfur deposition and mercury methylation, the final ISA determined that ''[t]he evidence is sufficient to infer a causal relationship between sulfur deposition and increased mercury methylation in wetlands and aquatic environments.''

The production of meaningful amounts of MeHg requires the presence of SO_4^{2-} and mercury, and where mercury is present, increased availability of SO_4^{2-} results in increased production of MeHg. There is increasing evidence on the relationship between sulfur deposition and increased methylation of mercury in aquatic environments; this effect occurs only where other factors are present at levels within a range to allow methylation. The production of MeHg requires the presence of SO_4^{2-} and mercury, but the amount of MeHg produced varies with oxygen content, temperature, pH, and supply of labile organic carbon (US EPA, 2008, section 3.4). In watersheds where changes in sulfate deposition did not produce an effect, one or several of those interacting factors were not in the range required for meaningful methylation to occur (US EPA, 2008, section 3.4). Watersheds with conditions known to be conducive to mercury methylation can be found in the northeastern U.S. and southeastern Canada.

While the relationship between sulfur and MeHg production was concluded to be causal in the ISA, the REA concluded that there was insufficient evidence to quantify the relationship between sulfur and MeHg. Therefore only a qualitative assessment was included in chapter 6 of the REA. The PA was then unable to make a determination as to the adequacy of the existing SO_2 standards in protecting against welfare effects associated with increased mercury methylation.

B. Risk and Exposure Assessment

The risk and exposure assessment conducted for the current review was developed to describe potential risk from current and future deposition of oxides of nitrogen and sulfur to sensitive ecosystems. The case study analyses in the REA show that there is confidence that known or anticipated adverse ecological effects are occurring under current ambient loadings of nitrogen and sulfur in sensitive ecosystems across the U.S. An overview of the material covered in the REA, a summary of the key findings from the air quality analyses, acidification and nutrient enrichment case studies, and general conclusions from evaluating additional welfare effects, are presented below.

1. Overview of the Risk and Exposure Assessment

The REA evaluates the relationships between atmospheric concentrations, deposition, biologically relevant exposures, targeted ecosystem effects, and ecosystem services. To evaluate the nature and magnitude of adverse effects associated with deposition, the REA also examines various ways to quantify the relationships between air quality indicators, deposition of biologically available forms of nitrogen and sulfur, ecologically relevant indicators relating to deposition, exposure and effects on sensitive receptors, and related effects resulting in changes in ecosystem structure and services. The intent is to determine the exposure metrics that incorporate the temporal considerations (*i.e.,* biologically relevant timescales), pathways, and ecologically relevant indicators necessary to determine the effects on these ecosystems. To the extent feasible, the REA evaluates the overall load to the system for nitrogen and sulfur, as well as the variability in ecosystem responses to these pollutants. It also evaluates the contributions of atmospherically deposited nitrogen and sulfur individually relative to the combined atmospheric loadings of both elements together.. Since oxidized nitrogen is the listed criteria pollutant (currently measured by the ambient air quality indicator NO_2) for the atmospheric contribution to total nitrogen, the REA examines the contribution of nitrogen oxides to total reactive nitrogen in the atmosphere, relative to the contributions of reduced forms of nitrogen (*e.g.,* ammonia, ammonium), to ultimately assess how a meaningful secondary NAAQS might be structured.

The REA focuses on ecosystem welfare effects that result from the deposition of total reactive nitrogen and sulfur. Because ecosystems are diverse in biota, climate, geochemistry, and hydrology, response to pollutant exposures can vary greatly between ecosystems. In addition, these diverse ecosystems are not distributed evenly across the United States. To target nitrogen and sulfur acidification and nitrogen and sulfur enrichment, the REA addresses four main targeted ecosystem effects on terrestrial and aquatic systems identified by the ISA (US EPA, 2008): Aquatic acidification due to nitrogen and sulfur; terrestrial acidification due to nitrogen and sulfur; aquatic nutrient enrichment, including eutrophication; and terrestrial nutrient enrichment.

In addition to these four targeted ecosystem effects, the REA also qualitatively addresses the influence of sulfur oxides deposition on MeHg production; nitrous oxide (N_2O) effects on climate; nitrogen effects on primary productivity and biogenic greenhouse gas (GHG) fluxes; and phytotoxic effects on plants.

Because the targeted ecosystem effects outlined above are not evenly distributed across the U.S., the REA identified case studies for each targeted effects based on ecosystems identified as sensitive to nitrogen and/or sulfur deposition effects. Eight case study areas and two supplemental study areas (Rocky Mountain National Park and Little Rock Lake, Wisconsin) are summarized in the REA based on ecosystem characteristics, indicators, and ecosystem service information. Case studies selected for aquatic acidification effects were the Adirondack Mountains and Shenandoah National Park. Kane Experimental Forest in Pennsylvania and Hubbard Brook Experimental Forest in New Hampshire were selected as case studies for terrestrial acidification. Aquatic nutrient enrichment case study locations were selected in the Potomac River Basin upstream of Chesapeake Bay and the Neuse River Basin upstream of the Pamlico Sound in North Carolina. The CSS communities in southern California and the MCF communities in the San Bernardino and Sierra Nevada Mountains of California were selected as case studies for terrestrial nutrient enrichment. Two supplemental areas were also chosen, one in Rocky Mountain National Park for terrestrial nutrient enrichment and one in Little Rock Lake, Wisconsin for aquatic nutrient enrichment.

2. Key Findings

In summary, based on case study analyses, the REA concludes that known or anticipated adverse ecological effects are occurring under current conditions and further concludes that these adverse effects continue into the future. Key findings from the air quality analyses, acidification and nutrient enrichment case studies, as well as general conclusions from evaluating additional welfare effects, are summarized below.

a. Air Quality Analyses

The air quality analyses in the REA encompass the current emissions sources of nitrogen and sulfur, as well as atmospheric concentrations, estimates of deposition of total nitrogen, policy-relevant background, and non-atmospheric loadings of nitrogen and sulfur to ecosystems, both nationwide and in the case study areas. Spatial fields of deposition were created using wet deposition measurements from the NADP National Trends Network and dry deposition predictions from the 2002 CMAQ model simulation. Some key conclusions from this analysis are:

(1) Total reactive nitrogen deposition and sulfur deposition are much greater in the East compared to most areas of the West.

(2) These regional differences in deposition correspond to the regional differences in oxides of nitrogen and SO_2 concentrations and emissions, which are also higher in the East. Oxides of nitrogen emissions are much greater and generally more widespread than NH_3 emissions nationwide; high NH_3 emissions tend to be more local (*e.g.,* eastern North Carolina) or sub-regional (*e.g.,* the upper Midwest and Plains states). The relative amounts of oxidized versus reduced nitrogen deposition are consistent with the relative amounts of oxides of nitrogen and NH_3 emissions. Oxidized nitrogen deposition exceeds reduced nitrogen deposition in most of the case study areas; the major exception being the Neuse River/Neuse River Estuary Case Study Area.

(3) Reduced nitrogen deposition exceeds oxidized nitrogen deposition in the vicinity of local sources of NH_3.

(4) There can be relatively large spatial variations in both total reactive nitrogen deposition and sulfur deposition within a case study area; this occurs particularly in those areas that contain or are near a high emissions source of oxides of nitrogen, NH_3 and/or SO_2.

(5) The seasonal patterns in deposition differ between the case study areas. For the case study areas in the East, the season with the greatest amounts of total reactive nitrogen deposition correspond to the season with the greatest amounts of sulfur deposition. Deposition peaks in spring in the Adirondack, Hubbard Brook Experimental Forest, and Kane Experimental Forest case study areas, and it peaks in summer in the Potomac River/Potomac Estuary, Shenandoah, and Neuse River/Neuse River Estuary case study areas. For the case study areas in the West, there is less consistency in the seasons with greatest total reactive nitrogen and sulfur deposition in a given area. In general, both nitrogen and/or sulfur deposition peaks in spring or summer. The exception to this is the Sierra Nevada Range portion of the MCF Case Study Area, in which sulfur deposition is greatest in winter.

b. Deposition-Related Aquatic Acidification

The role of aquatic acidification in two eastern United States areas—northeastern New York's Adirondack area and the Shenandoah area in Virginia—was analyzed in the REA to assess surface water trends in SO_4^{2-} and NO_3^- concentrations and ANC levels and to affirm the understanding that reductions in deposition could influence the risk of acidification. Monitoring data from the EPA-administered TIME)/LTM programs and the EMAP were assessed for the years 1990 to 2006, and past, present and future water quality levels were estimated using both steady-state and dynamic biogeochemical models.

Although wet deposition rates for SO_2 and oxides of nitrogen in the Adirondack Case Study Area have reduced since the mid-1990s, current concentrations are still well above pre-acidification (1860) conditions. The MAGIC modeling predicts NO_3^- and SO_4^{2-} are 17- and 5-fold higher today, respectively. The estimated average ANC for 44 lakes in the Adirondack Case Study Area is 62.1 μeq/L (±15.7 μeq/L); 78 percent of all monitored lakes in the Adirondack Case Study Area have a current risk of Elevated, Severe, or Acute. Of the 78 percent, 31 percent experience episodic acidification, and 18 percent are chronically acidic today.

(1) Based on the steady-state critical load model for the year 2002, 18 percent, 28 percent, 44 percent, and 58 percent of 169 modeled lakes received combined total sulfur and nitrogen deposition that exceeded critical loads corresponding to ANC limits of 0, 20, 50, and 100 μeq/L respectively.

(2) Based on a deposition scenario that maintains current emission levels to 2020 and 2050, the simulation forecast indicates no improvement in water quality in the Adirondack Case Study Area. The percentage of lakes within the Elevated to Acute Concern classes remains the same in 2020 and 2050.

(3) Since the mid-1990s, streams in the Shenandoah Case Study Area have shown slight declines in NO_3 and SO_4^{2-} concentrations in surface waters. The ANC levels increased from about 50 μeq/L in the early 1990s to >75 μeq/L until 2002, when ANC levels declined back to 1991–1992 levels. Current concentrations are still above pre-acidification (1860) conditions. The MAGIC modeling predicts surface water concentrations of NO_3 and SO_4^{2-} are 10- and 32-fold higher today, respectively. The estimated average ANC for 60 streams in the Shenandoah Case Study Area is 57.9 μeq/L (±4.5 μeq/L). Fifty-five percent of all monitored streams in the Shenandoah Case Study Area have a current risk of Elevated, Severe, or Acute. Of the 55 percent, 18 percent experience episodic acidification, and 18 percent are chronically acidic today.

(4) Based on the steady-state critical load model for the year 2002, 52 percent, 72 percent, 85 percent and 93 percent of 60 modeled streams received combined total sulfur and nitrogen deposition that exceeded critical loads corresponding to ANC limits of 0, 20, 50, and 100 μeq/L respectively.

(5) Based on a deposition scenario that maintains current emission levels to 2020 and 2050, the simulation forecast indicates that a large number of streams would still have Elevated to Acute problems with acidity.

c. Deposition-Related Terrestrial Acidification

The role of terrestrial acidification was examined in the REA using a critical load analysis for sugar maple and red spruce forests *in* the eastern U.S. by using the BC/Al ratio in acidified forest soils as an *in*dicator to assess the impact of nitrogen and sulfur deposition on tree health. These are the two most commonly studied species in North America for impacts of acidification. At a BC/Al ratio of 1.2, red spruce growth can be reduced by 20 percent. Sugar maple growth can be reduced by 20 percent at a BC/Al ratio of 0.6. Key findings of the case study are summarized below.

(1) Case study results suggest that the health of at least a portion of the sugar maple and red spruce growing in the U.S. may have been compromised with acidifying total nitrogen and sulfur deposition in 2002. The 2002 CMAQ/NADP total nitrogen and sulfur deposition levels exceeded three selected critical loads in 3 percent to 75 percent of all sugar maple plots across 24 states. The three critical loads ranged from 6,008 to 107 eq/ha/yr for the BC/Al ratios of 0.6, 1.2, and 10.0 (increasing levels of tree protection). The 2002 CMAQ/NADP total nitrogen and sulfur deposition levels exceeded three selected critical loads in 3 percent to 36 percent of all red spruce plots across eight states. The three critical loads

ranged from 4,278 to 180 eq/ha/yr for the Bc/Al ratios of 0.6, 1.2, and 10.0 (increasing levels of tree protection).

(2) The SMB model assumptions made for base cation weathering (Bcw) and forest soil ANC input parameters are the main sources of uncertainty since these parameters are rarely measured and require researchers to use default values.

(3) The pattern of case study results suggests that nitrogen and sulfur acidifying deposition in the sugar maple and red spruce forest areas studied were similar in magnitude to the critical loads for those areas and both ecosystems are likely to be sensitive to any future changes in the levels of deposition.

d. Deposition-Related Aquatic Nutrient Enrichment

The role of nitrogen deposition in two main stem rivers feeding their respective estuaries was analyzed in the REA to determine if decreases in deposition could influence the risk of eutrophication as predicted using the ASSETS EI scoring system in tandem with SPARROW modeling. This modeling approach provides a transferrable, intermediate-level analysis of the linkages between atmospheric deposition and receiving waters, while providing results on which conclusions could be drawn. A summary of findings follows:

(1) The 2002 CMAQ/NADP results showed that an estimated 40,770,000 kilograms (kg) of total nitrogen was deposited in the Potomac River watershed. The SPARROW modeling predicted that 7,380,000 kg N/yr of the deposited nitrogen reached the estuary (20 percent of the total load to the estuary). The overall ASSETS EI for the Potomac River and Potomac Estuary was Bad (based on all sources of N).

(2) To improve the Potomac River and Potomac Estuary ASSETS EI score from Bad to Poor, a decrease of at least 78 percent in the 2002 total nitrogen atmospheric deposition load to the watershed would be required.

(3) The 2002 CMAQ/NADP results showed that an estimated 18,340,000 kg of total nitrogen was deposited in the Neuse River watershed. The SPARROW modeling predicted that 1,150,000 kg N/yr of the deposited nitrogen reached the estuary (26 percent of the total load to the estuary). The overall ASSETS EI for the Neuse River/Neuse River Estuary was Bad.

(4) It was found that the Neuse River/Neuse River Estuary ASSETS EI score could not be improved from Bad to Poor with decreases only in the 2002 atmospheric deposition load to the watershed. Additional reductions would be required from other nitrogen sources within the watershed.

The small effect of decreasing atmospheric deposition in the Neuse River watershed is because the other nitrogen sources within the watershed are more influential than atmospheric deposition in affecting the total nitrogen loadings to the Neuse River Estuary, as estimated with the SPARROW model. A water body's response to nutrient loading depends on the magnitude (*e.g.,* agricultural sources have a higher influence in the Neuse than in the Potomac), spatial distribution, and other characteristics of the sources within the watershed; therefore a reduction in nitrogen deposition does not always produce a linear response in reduced load to the estuary, as demonstrated by these two case studies.

e. Deposition-Related Terrestrial Nutrient Enrichment

California CSS and MCF communities were the focus of the Terrestrial Nutrient Enrichment Case Studies of the REA. Geographic information systems analysis supported a qualitative review of past field research to identify ecological benchmarks associated with CSS and mycorrhizal communities, as well as MCF's nutrient-sensitive acidophyte lichen communities, fine-root biomass in Ponderosa pine and leached nitrate in receiving waters. These benchmarks, ranging from 3.1 to 17 kg N/ha/yr, were compared to 2002 CMAQ/NADP data to discern any associations between atmospheric deposition and changing communities. Evidence supports the finding that nitrogen alters CSS and MCF. Key findings include the following:

(1) The 2002 CMAQ/NADP nitrogen deposition data show that the 3.3 kg N/ha/yr benchmark has been exceeded in more than 93 percent of CSS areas (654,048 ha). This suggests that such deposition is a driving force in the degradation of CSS communities. One potentially confounding factor is the role of fire. Although CSS decline has been observed in the absence of fire, the contributions of deposition and fire to the CSS decline require further research. The CSS is fragmented into many small parcels, and the 2002 CMAQ/NADP 12-km grid data are not fine enough to fully validate the relationship between CSS distribution, nitrogen deposition, and fire.

(2) The 2002 CMAQ/NADP nitrogen deposition data exceeds the 3.1 kg N/ha/yr benchmark in more than 38% (1,099,133 ha) of MCF areas, and nitrate leaching has been observed in surface waters. Ozone effects confound nitrogen effects on MCF acidophyte lichen, and the interrelationship between fire and nitrogen cycling requires additional research.

f. Additional Effects

Ecological effects have also been documented across the U.S. where elevated nitrogen deposition has been observed, including the eastern slope of the Rocky Mountains where shifts in dominant algal species in alpine lakes have occurred where wet nitrogen deposition was only about 1.5 kg N/ha/yr. High alpine terrestrial communities have a low capacity to sequester nitrogen deposition, and monitored deposition exceeding 3 to 4 kg N/ha/yr could lead to community-level changes in plant species, lichens and mycorrhizae.

Additional welfare effects are documented, but examined less extensively, in the REA. These effects include qualitative discussions related to visibility and materials damage, such as corrosion, erosion, and soiling of paint and buildings which are being addressed in the PM NAAQS review currently underway. A discussion of the causal relationship between sulfur deposition (as sulfate, SO_4^{2-}) and increased mercury methylation in wetlands and aquatic environments is also included in the REA. On this subject the REA concludes that decreases in SO_4^{2-} deposition will likely result in decreases in MeHg concentration; however, spatial and biogeochemical variations nationally hinder establishing large scale dose-response relationships.

Several additional issues concerning oxides of nitrogen were addressed in the REA. Consideration was also given to N_2O, a potent GHG. The REA concluded that it is most appropriate to analyze the role of N_2O in the context of all of the GHGs rather than as part of the REA for this review. The REA considered nitrogen deposition and its correlation with the rate of photosynthesis and net primary productivity. Nitrogen addition ranging from 15.4 to 300 kg N/ha/yr is documented as increasing wetland N_2O production by an average of 207 percent across all ecosystems. Nitrogen addition ranging from 30 to 240 kg N/ha/yr increased CH_4 emissions by 115 percent, averaged across all ecosystems, and methane uptake was reduced by 38 percent averaged across all ecosystems when nitrogen addition ranged from 10 to 560 kg N/ha/yr, but reductions were only significant for coniferous and deciduous forests. The heterogeneity of ecosystems across the U.S., however, introduces variations into dose-response relationships.

The phytotoxic effects of oxides of nitrogen and sulfur on vegetation were also briefly discussed in the REA which concluded that since a unique secondary NAAQS exists for SO_2, and concentrations of nitric oxide (NO), NO_2 and PAN are rarely high enough to have phytotoxic effects on vegetation, further assessment was not warranted at this time.

3. Conclusions on Effects

For aquatic and terrestrial acidification effects, a similar conceptual approach was used (critical loads) to evaluate the impacts of multiple pollutants on an ecological endpoint, whereas the approaches used for aquatic and terrestrial nutrient enrichment were fundamentally distinct. Although the ecological indicators for aquatic and terrestrial acidification (*i.e.,* ANC and BC/Al) are very different, both ecological indicators are well-correlated with effects such as reduced biodiversity and growth. While aquatic acidification is clearly the targeted effect area with the highest level of confidence, the relationship between atmospheric deposition and an ecological indicator is also quite strong for terrestrial acidification. The main drawback with the understanding of terrestrial acidification is that the data are based on laboratory responses rather than field measurements. Other stressors that are present in the field but that are not present in the laboratory may confound this relationship.

For nutrient enrichment effects, the REA utilized different types of indicators for aquatic and terrestrial effects to assess both the likelihood of adverse effects to ecosystems and the relationship between adverse effects and atmospheric sources of oxides of nitrogen. The ecological indicator chosen for aquatic nutrient enrichment, the ASSETS EI, seems to be inadequate to relate atmospheric deposition to the targeted ecological effect, likely due to the many other confounding factors. Further, there is far less confidence associated with the understanding of aquatic nutrient enrichment because of the large contributions from non-atmospheric sources of nitrogen and the influence of both oxidized and reduced forms of nitrogen, particularly in large watersheds and coastal areas. However, a strong relationship exists between atmospheric deposition of nitrogen and ecological effects in high alpine lakes in the Rocky Mountains because atmospheric deposition is the only source of nitrogen to these systems. There is also a strong weight-of-evidence regarding the relationships between ecological effects attributable to terrestrial nitrogen nutrient enrichment; however, ozone and climate change may be confounding factors. In addition, the response for other species or species in other regions of the U.S. has not been quantified.

C. Adversity of Effects to Public Welfare

Characterizing a known or anticipated adverse effect to public welfare is an important component of developing any secondary NAAQS. According to the CAA, welfare effects include: ''Effects on soils, water, crops, vegetation, manmade materials, animals, wildlife, weather, visibility, and climate, damage to and deterioration of property, and hazards to transportation, as well as effect on economic values and on personal comfort and well-being, whether caused by transformation, conversion, or combination with other air pollutants'' (CAA, Section 302(h)). While the text above lists a number of welfare effects, these effects do not define public welfare in and of themselves.

Although there is no specific definition of adversity to public welfare, the paradigm of linking adversity to public welfare to disruptions in ecosystem structure and function has been used broadly by EPA to categorize effects of pollutants from the cellular to the ecosystem level. An evaluation of adversity to public welfare might consider the likelihood, type, magnitude, and spatial scale of the effect as well as the potential for recovery and any uncertainties relating to these considerations.

Similar concepts were used in past reviews of secondary NAAQS for ozone and PM (relating to visibility), as well as in initial reviews of effects from lead deposition. Because oxides of nitrogen and sulfur are deposited from ambient sources into ecosystems where they affect changes to organisms, populations and ecosystems, the concept of adversity to public welfare as a result of alterations in structure and function of ecosystems is an appropriate consideration for this review.

Based on information provided in the PA, the following section discusses how ecological effects from deposition of oxides of nitrogen and sulfur relate to adversity to public welfare. In the PA, public welfare was discussed in terms of loss of ecosystem services (defined below), which in some cases can be monetized. Each of the four main effect areas (aquatic and terrestrial acidification and aquatic and terrestrial nutrient over-enrichment) are discussed including current ecological effects and associated ecosystem services.

1. Ecosystem Services

The PA defines ecosystem services as the benefits individuals and organizations obtain from ecosystems. Ecosystem services can be classified as provisioning (food and water), regulating (control of climate and disease), cultural (recreational, existence, spiritual, educational), and supporting (nutrient cycling). Conceptually, changes in ecosystem services may be used to aid in characterizing a known or anticipated adverse effect to public welfare. In the REA and PA ecosystem services are discussed as a method of assessing the magnitude and significance to the public of resources affected by ambient concentrations of oxides of nitrogen and sulfur and deposition in sensitive ecosystems.

The EPA has in previous NAAQS reviews defined ecological goods and services for the purposes of a Regulatory Impact Analysis as the ''outputs of ecological functions or processes that directly or indirectly contribute to social welfare or have the potential to do so in the future. Some outputs may be bought and sold, but most are not marketed.'' It is especially important to acknowledge that it is difficult to measure and/or monetize the goods and services supplied by ecosystems. It can be informative in characterizing adversity to public welfare to attempt to place an economic valuation on the set of goods and services that have been identified with respect to a change in policy; however it must be noted that this valuation will be incomplete and illustrative only.

Knowledge about the relationships linking ambient concentrations and ecosystem services is considered in the PA as one method by which to inform a policy judgment on a known or anticipated adverse public welfare effect. For example, a change in an ecosystem structure and process, such as foliar injury, would be classified as an ecological effect, with the associated changes in ecosystem services, such as primary productivity, food availability, forest products, and aesthetics (*e.g.,* scenic viewing), classified as public welfare effects. Additionally, changes in biodiversity would be classified as an ecological effect, and the associated changes in ecosystem services—productivity, existence (nonuse) value, recreational viewing and aesthetics—would also be classified as public welfare effects.

As described in chapters 4 and 5 of the REA, case study analyses were performed that link deposition in sensitive ecosystems to changes in a

given ecological indicator (*e.g.,* for aquatic acidification, to changes in ANC) and then to changes in ecosystems. Appendix 8 of the REA links the changes in ecosystems to the services they provide (*e.g.,* fish species richness and its influence on recreational fishing). To the extent possible for each targeted effect area, the REA linked ambient concentrations of nitrogen and sulfur (*i.e.,* ambient air quality indicators) to deposition in sensitive ecosystems (*i.e.,* exposure pathways), and then to system response as measured by a given ecological indicator (*e.g.,* lake and stream acidification as measured by ANC). The ecological effect (*e.g.,* changes in fish species richness) was then, where possible, associated with changes in ecosystem services and the corresponding public welfare effects (*e.g.,* recreational fishing).

2. Effects on Ecosystem Services

The process used to link ecological indicators to ecosystem services is discussed extensively in appendix 8 of the REA. In brief, for each case study area assessed, the ecological indicators are linked to an ecological response that is subsequently linked to associated services to the extent possible. For example, in the case study for aquatic acidification the chosen ecological indicator is ANC which can be linked to the ecosystem service of recreational fishing. Although recreational fishing losses are the only service effects that can be independently quantified or monetized at this time, there are numerous other ecosystem services that may be related to the ecological effects of acidification.

While aquatic acidification is the focus of this proposed standard, the other effect areas were also analyzed in the REA and these ecosystems are being harmed by nitrogen and sulfur deposition and will obtain some measure of protection with any decrease in that deposition regardless of the reason for the decrease. The following summarizes the current levels of specific ecosystem services for aquatic and terrestrial acidification and aquatic and terrestrial nutrient over-enrichment and attempts to quantify and when possible monetize the harm to public welfare, as represented by ecosystem services, due to nitrogen and sulfur deposition.

a. Aquatic Acidification

Acidification of aquatic ecosystems primarily affects the ecosystem services that are derived from the fish and other aquatic life found in surface waters. In the northeastern United States, the surface waters affected by acidification are not a major source of commercially raised or caught fish; however, they are a source of food for some recreational and subsistence fishers and for other consumers. Although data and models are available for examining the effects on recreational fishing, relatively little data are available for measuring the effects on subsistence and other consumers. Inland waters also provide aesthetic and educational services along with non-use services, such as existence value (protection and preservation with no expectation of direct use). In general, inland surface waters such as lakes, rivers, and streams also provide a number of regulating services, playing a role in hydrological regimes and climate regulation. There is little evidence that acidification of freshwaters in the northeastern U.S. has significantly degraded these specific services; however, freshwater ecosystems also provide biological control services by providing environments that sustain delicate aquatic food chains. The toxic effects of acidification on fish and other aquatic life impair these services by disrupting the trophic structure of surface waters. Although it is difficult to quantify these services and how they are affected by acidification, it is worth noting that some of these services may be captured through measures of provisioning and cultural services. For example, these biological control services may serve as ''intermediate'' inputs that support the production of ''final'' recreational fishing and other cultural services.

As summarized in Chapter 4 of the PA, recent studies indicate that acidification of lakes and streams can result in significant loss in economic value. For example, data indicate that more than 9 percent of adults in the northeastern part of the country participate annually in freshwater fishing yielding 140 million freshwater fishing days. Each fishing day has an estimated average value per day of $35. Therefore, the implied total annual value of freshwater fishing in the northeastern U.S. was $5 billion in 2006. Embedded in these numbers is a degree of harm to recreational fishing services due to acidification that has occurred over time. These harms have not been quantified on a regional scale; however, a case study was conducted in the Adirondacks area (US EPA, 2011, section 4.4.2).

In the Adirondacks case study, estimates of changes in recreational fishing services were determined, as well as changes more broadly in ''cultural'' ecosystem services (including recreational, aesthetic, and nonuse services). First, the MAGIC model (US EPA, 2009, Appendix 8 and section 2.2) was applied to 44 lakes to predict what ANC levels would be under both ''business as usual'' conditions (*i.e.,* allowing for some decline in deposition due to existing regulations) and pre-emission (*i.e.,* background) conditions. Second, to estimate the recreational fishing impacts of aquatic acidification in these lakes, an existing model of recreational fishing demand and site choice was applied. This model predicts how recreational fishing patterns in the Adirondacks would differ and how much higher the average annual value of recreational fishing services would be for New York residents if lake ANC levels corresponded to background (rather than business as usual) conditions. To estimate impacts on a broader category of cultural (and some provisioning) ecosystem services, results from the Banzhaf et al (2006) valuation survey of New York residents were adapted and applied to this context. The survey used a contingent valuation approach to estimate the average annual household willingness to pay (WTP) for future reductions in the percent of Adirondack lakes impaired by acidification. The focus of the survey was on impacts on aquatic resources. Pretesting of the survey indicated that respondents nonetheless tended to assume that benefits would occur in the condition of birds and forests as well as in recreational fishing.

By extrapolating the 44 lake Adirondack case study to all 3,000 Adirondack lakes and by applying the WTP survey results to all New York residents, the study estimated aggregated benefits between $300 and $800 million annually for the equivalent of improving lakes in the Adirondacks region to an ANC level of 50 μeq/L. The REA estimated 44 percent of the Adirondack lakes currently fall below an ANC of 50 μeq/L. Several states have set goals for improving the acid status of lakes and streams, generally targeting ANC in the range of 50 to 60 μeq/L, and have engaged in costly activities to decrease acidification.

These results imply significant value to the public in addition to those derived from recreational fishing services. Note that the results are only applicable to improvements in the Adirondacks valued by residents of New York. If similar benefits exist in other acid-impacted areas, benefits for the nation as a whole could be substantial. The analysis provides results on only a subset of the impacts of acidification on ecosystem services and suggests that the

overall impact on these services is likely to be substantial.

b. Terrestrial Acidification

Chapters 4.4.3 and 4.4.4 of the PA review several economic studies of areas sensitive to terrestrial acidification. Forests in the northeastern U.S. provide several important and valuable provisioning ecosystem services, which are reflected in the production and sales of tree products. Sugar maples are a particularly important commercial hardwood tree species in the United States, producing timber and maple syrup that provide hundreds of millions of dollars in economic value annually. Red spruce is also used in a variety of wood products and provides up to $100 million in economic value annually. Although the data do not exist to directly link acidification damages to economic values of lost recreational ecosystem services in forests, these resources are valuable to the public. A recent study, reviewed in the PA, suggests that the total annual value of recreational off-road driving was more than $9 billion and the value of hunting and wildlife viewing was more than $4 billion each in the northeastern States. The EPA is not able to quantify at this time the specific effects on these values of acid deposition, or of any specific reductions in deposition, relative to the effects of many other factors that may affect them.

c. Nutrient Enrichment

Chapters 4.4.5 and 4.4.6 of the PA summarize economic studies of east coast estuaries affected by nutrient over-enrichment or eutrophication. Estuaries in the eastern United States are important for fish and shellfish production. The estuaries are capable of supporting large stocks of resident commercial species, and they serve as the breeding grounds and interim habitat for several migratory species. To provide an indication of the magnitude of provisioning services associated with coastal fisheries, from 2005 to 2007, the average value of total catch was $1.5 billion per year in 15 East Coast states. Estuaries also provide an important and substantial variety of cultural ecosystem services, including water-based recreational and aesthetic services. For example, data indicate that 4.8 percent of the population in coastal states from North Carolina to Massachusetts participated in saltwater fishing, with a total of 26 million saltwater fishing days in 2006. Based on estimates in the PA, total recreational value from these saltwater fishing days was approximately $1.3 billion. Recreational participation estimates for 1999–2000 showed almost 6 million individuals participated in motorboating in coastal states from North Carolina to Massachusetts. The aggregate value of these coastal motorboating outings was $2 billion per year. EPA is not able to quantify at this time the specific effects on these values of nitrogen deposition, or of any specific reductions in deposition, relative to the effects of many other factors that may affect them.

Terrestrial ecosystems can also suffer from nutrient over-enrichment. Each ecosystem is different in its composition of species and nutrient requirements. Changes to individual ecosystems from changes in nitrogen deposition can be hard to assess economically. Relative recreational values are often determined by public use information. Chapter 4.4.7 of the PA reviewed studies related to park use in California. Data from California State Parks indicate that in 2002, 68.7 percent of adult residents participated in trail hiking for an average of 24.1 days per year. The analyses in the PA indicate that the aggregate annual benefit for California residents from trail hiking in 2007 was $11.59 billion. EPA is not able to quantify at this time the specific effects on these values of nitrogen deposition, or of any specific reductions in deposition, relative to the effects of many other factors that may affect them.

The PA also identified fire regulation as a service that could be affected by nutrient over-enrichment of the CSS and MCF ecosystems by encouraging growth of more flammable grasses, increasing fuel loads, and altering the fire cycle. Over the 5-year period from 2004 to 2008, Southern California experienced, on average, over 4,000 fires per year, burning, on average, over 400,000 acres per year. It is not possible at this time to quantify the contribution of nitrogen deposition, among many other factors, to increased fire risk.

3. Summary

Adversity to public welfare can be understood by looking at how deposition of oxides of nitrogen and sulfur affect the ecological functions of an ecosystem (see II.A.), and then understanding the ecosystem services that are degraded. The monetized value of the ecosystem services provided by ecosystems that are sensitive to deposition of oxides of nitrogen and sulfur are in the billions of dollars each year, though it is not possible to quantify or monetize at this time the effects on these values of nitrogen and sulfur deposition or of any changes in deposition that may result from new secondary standards. Many lakes and streams are known to be degraded by acidic deposition which affects recreational fishing and tourism. Forest growth is likely suffering from acidic deposition in sensitive areas affecting red spruce and sugar maple timber production, sugar maple syrup production, hiking, aesthetic enjoyment and tourism. Nitrogen deposition contributes significantly to eutrophication in many estuaries affecting fish production, swimming, boating, aesthetic enjoyment and tourism. Ecosystem services are likely affected by nutrient enrichment in many natural and scenic terrestrial areas, affecting biodiversity, including habitat for rare and endangered species, fire control, hiking, aesthetic enjoyment and tourism.

D. Adequacy of the Current Standards

An important issue to be addressed in the current review of the secondary standards for oxides of nitrogen and sulfur is whether, in view of the scientific evidence reflected in the ISA, additional information on exposure and risk discussed in the REA, and conclusions drawn from the PA, the existing standards provide adequate protection. The Administrator therefore, has considered the extent to which the current standards are adequate for the protection of public welfare. Having reached the general conclusion that aquatic and terrestrial ecosystems can be degraded by deposition of oxides of nitrogen and sulfur, it is then necessary to first evaluate the appropriateness (in terms of form and structure) of the current standards to address the ecological effects of oxides of nitrogen and sulfur as well as the adequacy of the current secondary standards for oxides of nitrogen and sulfur to provide requisite protection by considering to what degree risks to sensitive ecosystems would be expected to occur in areas that meet the current standards. Conclusions regarding the adequacy of the current standards are based on the available ecological effects, exposure and risk-based evidence. In evaluating the strength of this information, EPA has taken into account the uncertainties and limitations in the scientific evidence. This section addresses the adequacy of the current standards to protect against direct exposure effects on plants from oxides of nitrogen and sulfur, the appropriateness of the current structure of the standards to address deposition-related effects of oxides of nitrogen and sulfur on sensitive ecosystems and finally, the adequacy of such standards to protect against adverse effects related to the deposition of oxides of nitrogen and sulfur.

1. Adequacy of the Current Standards for Direct Effects

The current secondary oxides of nitrogen and sulfur standards are intended to protect against adverse effects to public welfare. For oxides of nitrogen, the current secondary standard was set identical to the primary standard,[3] *i.e.,* an annual standard set for NO_2 to protect against adverse effects on vegetation from direct exposure to ambient oxides of nitrogen. For oxides of sulfur, the current secondary standard is a 3-hour standard intended to provide protection for plants from the direct foliar damage associated with atmospheric concentrations of SO_2. It is appropriate to consider whether the current standards are adequate to protect against the direct effects on vegetation resulting from ambient NO_2 and SO_2 which were the basis for the current secondary standards. The ISA concluded that there was sufficient evidence to infer a causal relationship between exposure to SO_2, NO, NO_2 and PAN and injury to vegetation. Additional research on acute foliar injury has been limited and there is no evidence to suggest foliar injury below the levels of the current secondary standards for oxides of nitrogen and sulfur. There is sufficient evidence to suggest that the levels of the current standards are likely adequate to protect against direct phytotoxic effects.

2. Appropriateness and Adequacy of the Current Standards for Deposition-Related Effects

This section addresses two concepts necessary to evaluate the current standards in the context of deposition related effects. First, appropriateness of the current standards is considered with regard to indicator, form, level and averaging time. This discussion centers around the ability of the current standards to evaluate and provide protection against deposition related effects that vary spatially and temporally. It includes particular emphasis on the indicators and forms of the current standards and the degree to which they are ecologically relevant with regard to deposition related effects. Second, this section evaluates the current standards in terms of adequacy of protection.

a. Appropriateness

The ISA has established that the major effects of concern for this review of the oxides of nitrogen and sulfur standards are associated with deposition of nitrogen and sulfur caused by atmospheric concentrations of oxides of nitrogen and sulfur. The current standards are not directed toward depositional effects, and none of the elements of the current NAAQS—indicator, form, averaging time, and level—are suited for addressing the effects of nitrogen and sulfur deposition.

Five issues arise that call into question the ecological relevance of the structure of the current secondary standards for oxides of nitrogen and sulfur.

(1) The current SO_2 secondary standard (0.5 ppm SO_2 over a 3-hour average) does not utilize an exposure period that is relevant for ecosystem impacts. The majority of deposition related impacts are associated with depositional loads that occur over periods of months to years. This differs significantly from exposures associated with hourly concentrations of SO_2 as measured by the current secondary standard. By addressing short-term concentrations, the current SO_2 secondary standard, while protective against direct foliar effects from gaseous oxides of sulfur, does not take into account the findings of effects in the ISA, which notes the relationship between annual deposition of sulfur and acidification effects which are likely to be more severe and widespread than phytotoxic effects under current ambient conditions, and include effects from long term deposition as well as short term. Acidification is a process that occurs over time because the ability of an aquatic system to counteract acidic inputs is reduced as natural buffers are used more rapidly than they can be replaced through geologic weathering. The relevant period of exposure for ecosystems is, therefore, not the exposures captured in the short averaging time of the current SO_2 secondary standard. The current secondary standard for oxides of nitrogen is an annual standard (0.053 ppm averaged over 1 year) and as such is more ecologically relevant.

(2) Current standards do not utilize appropriate atmospheric indicators. Nitrogen dioxide and SO_2 are used as the component of oxides of nitrogen and sulfur that are measured, but they do not provide a complete link to the direct effects on ecosystems from deposition of oxides of nitrogen and sulfur as they do not capture all relevant chemical species of oxidized nitrogen and oxidized sulfur that contribute to deposition. The ISA provides evidence that deposition related effects are linked with total nitrogen *and* total sulfur deposition, and thus all forms of oxidized nitrogen and oxidized sulfur that are deposited will contribute to effects on ecosystems. Thus, by using atmospheric NO_2 and SO_2 concentrations as indicators, the current standards address only a fraction of total atmospheric oxides of nitrogen and sulfur, and do not take into account the effects from deposition of total atmospheric oxides of nitrogen and sulfur. This suggests that more comprehensive atmospheric indicators should be considered in designing ecologically relevant standards.

(3) Current standards reflect separate assessments of the two individual pollutants, NO_2 and SO_2, rather than assessing the joint impacts of deposition to ecosystems. Recognizing the role that each pollutant plays in jointly affecting ecosystem indicators, functions, and services is vital to developing a meaningful standard. The clearest example of this interaction is in assessment of the impacts of acidifying deposition on aquatic ecosystems. Acidification in an aquatic ecosystem depends on the total acidifying potential of the deposition of both nitrogen and sulfur from both atmospheric deposition of oxides of nitrogen and sulfur as well as the inputs from other sources of nitrogen and sulfur such as reduced nitrogen and non-atmospheric sources. It is the joint impact of the two pollutants that determines the ultimate effect on organisms within the ecosystem, and critical ecosystem functions such as habitat provision and biodiversity. Standards that are set independently are less able to account for the contribution of the other pollutant. This suggests that interactions between oxides of nitrogen and oxides of sulfur should be a critical element of the conceptual framework for ecologically relevant standards. There are also important interactions between oxides of nitrogen and sulfur and reduced forms of nitrogen, which also contribute to acidification and nutrient enrichment. It is important that the structure of the standards address the role of reduced nitrogen in determining the ecological effects resulting from deposition of atmospheric oxides of nitrogen and sulfur. Consideration will also have to be given to total loadings as ecosystems respond to all sources of nitrogen and sulfur.

(4) Current standards do not take into account variability in ecosystem sensitivity. Ecosystems are not uniformly distributed either spatially or temporally in their sensitivity to oxides of nitrogen and sulfur. Therefore, failure to account for the major determinants of variability, including geological and soil

[3] The current primary NO_2 standard has recently been changed to the 3-year average of the 98th percentile of the annual distribution of the 1 hour daily maximum of the concentration of NO_2. The current secondary standard remains as it was set in 1971.

characteristics related to the sensitivity to acidification or nutrient enrichment as well as atmospheric and landscape characteristics that govern rates of deposition, may lead to standards that do not provide requisite levels of protection across ecosystems. The current structures of the standards do not address the complexities in the responses of ecosystems to deposition of oxides of nitrogen and sulfur. Ecosystems contain complex groupings of organisms that respond in various ways to the alterations of soil and water that result from deposition of nitrogen and sulfur compounds. Different ecosystems therefore respond in different ways depending on a multitude of factors that control how deposition is integrated into the system. For example, the same levels of deposition falling on limestone dominated soils have a very different effect from those falling on shallow glaciated soils underlain with granite. One system may over time display no obvious detriment while the other may experience a catastrophic loss in fish communities. This degree of sensitivity is a function of many atmospheric factors that control rates of deposition as well as ecological factors that control how an ecosystem responds to that deposition. The current standards do not take into account spatial and seasonal variations, not only in depositional loadings, but also in sensitivity of ecosystems exposed to those loadings. Based on the discussion summarized above, the PA concludes that the current secondary standards for oxides of nitrogen and oxides of sulfur are not ecologically relevant in terms of averaging time, form, level or indicator.

b. Adequacy of Protection

As described in the PA, ambient conditions in 2005 indicate that the current SO_2 and NO_2 secondary standards were not exceeded at that time (US EPA, 2011, Figures 6–1 and 6–2) in locations where negative ecological effects have been observed. In many locations, SO_2 and NO_2 concentrations are substantially below the levels of the secondary standards. This pattern suggests that levels of deposition and any negative effects on ecosystems due to deposition of oxides of nitrogen and sulfur under recent conditions are occurring even though areas meet or are below current standards. In addition, based on conclusions in the REA, these levels will not decline in the future to levels below which it is reasonable to anticipate effects.

In determining the adequacy of the current secondary standards for oxides of nitrogen and sulfur the PA considered the extent to which ambient deposition contributes to loadings in ecosystems. Since the last review of the secondary standard for oxides of nitrogen, a great deal of information on the contribution of atmospheric deposition associated with ambient oxides of nitrogen has become available. The REA presents a thorough assessment of the contribution of oxidized nitrogen to nitrogen deposition throughout the U.S., and the relative contributions of ambient oxidized and reduced forms of nitrogen. The REA concludes that based on that analysis, ambient oxides of nitrogen are a significant component of atmospheric nitrogen deposition, even in areas with relatively high rates of deposition of reduced nitrogen. In addition, atmospheric deposition of oxidized nitrogen contributes significantly to total nitrogen loadings in nitrogen sensitive ecosystems.

The ISA summarizes the available studies of relative nitrogen contribution and finds that in much of the U.S., oxides of nitrogen contribute from 50 to 75 percent of total atmospheric deposition relative to total reactive nitrogen, which includes oxidized and reduced nitrogen species (US EPA, 2008, section 2.8.4). Although the proportion of total nitrogen loadings associated with atmospheric deposition of nitrogen varies across locations, the ISA indicates that atmospheric nitrogen deposition is the main source of new anthropogenic nitrogen to most headwater streams, high elevation lakes, and low-order streams. Atmospheric nitrogen deposition contributes to the total nitrogen load in terrestrial, wetland, freshwater and estuarine ecosystems that receive nitrogen through multiple pathways. In several large estuarine systems, including the Chesapeake Bay, atmospheric deposition accounts for between 10 and 40 percent of total nitrogen loadings (US EPA, 2008).

Atmospheric concentrations of oxides of sulfur account for nearly all sulfur deposition in the US. For the period 2004–2006, mean sulfur deposition in the U.S. was greatest east of the Mississippi River with the highest deposition amount, 21.3 kg S/ha-yr, in the Ohio River Valley where most recording stations reported 3-year averages >10 kg S/ha-yr. Numerous other stations in the East reported S deposition >5 kg S/ha-yr. Total sulfur deposition in the U.S. west of the 100th meridian was relatively low, with all recording stations reporting <2 kg S/ha-yr and many reporting <1 kg S/ha-yr. Sulfur was primarily deposited in the form of wet SO_4^{2-} followed in decreasing order by a smaller proportion of dry SO_2 and a much smaller proportion of deposition as dry SO_4^{2-}.

As discussed throughout the REA (US EPA, 2009 and section II.B above), there are several key areas of risk that are associated with ambient concentrations of oxides of nitrogen and sulfur. As noted earlier, in previous reviews of the secondary standards for oxides of nitrogen and sulfur, the standards were designed to protect against direct exposure of plants to ambient concentrations of the pollutants. A significant shift in understanding of the effects of oxides of nitrogen and sulfur has occurred since the last reviews, reflecting the large amount of research that has been conducted on the effects of deposition of nitrogen and sulfur to ecosystems. The most significant current risks of adverse effects to public welfare are those related to deposition of oxides of nitrogen and sulfur to both terrestrial and aquatic ecosystems. These risks fall into two categories, acidification and nutrient enrichment, which were emphasized in the REA as most relevant to evaluating the adequacy of the existing standards in protecting public welfare from adverse ecological effects.

i. Aquatic Acidification

The focus of the REA case studies was on determining whether deposition of sulfur and oxidized nitrogen in locations where ambient oxides of nitrogen and sulfur were at or below the current standards was resulting in acidification and related effects, including episodic acidification and mercury methylation. Based on the case studies conducted for lakes in the Adirondacks and streams in Shenandoah National Park (case studies are discussed more fully in section II.B and US EPA, 2009), there is significant risk to acid sensitive aquatic ecosystems at atmospheric concentrations of oxides of nitrogen and sulfur at or below the current standards. The REA also supports strongly a relationship between atmospheric deposition of oxides of nitrogen and sulfur and loss of ANC in sensitive ecosystems and indicates that ANC is an excellent indicator of aquatic acidification. The REA also concludes that at levels of deposition associated with oxides of nitrogen and sulfur concentrations at or below the current standards, ANC levels are expected to be below benchmark values that are associated with significant losses in fish species richness.

Significant portions of the U.S. are acid sensitive, and current deposition levels exceed those that would allow

recovery of the most acid sensitive lakes in the Adirondacks (US EPA, 2008, Executive Summary). In addition, because of past loadings, areas of the Shenandoah are sensitive to current deposition levels (US EPA, 2008, Executive Summary). Parts of the West are naturally less sensitive to acidification and subjected to lower deposition (particularly SO_X) levels relative to the eastern United States, and as such, less focus in the ISA is placed on the adequacy of the existing standards in these areas, with the exception of the mountainous areas of the West, which experience episodic acidification due to deposition.

In describing the effects of acidification in the two case study areas the REA uses the approach of describing benchmarks in terms of ANC values. Many locations in sensitive areas of the U.S. have ANC levels below benchmark levels for ANC classified as severe, elevated, or moderate concern (US EPA, 2011, Figure 2–1). The average current ANC levels across 44 lakes in the Adirondack case study area is 62.1 μeq/L (moderate concern). However, 44 percent of lakes had deposition levels exceeding the critical load for an ANC of 50 μeq/L (elevated), and 28 percent of lakes had deposition levels exceeding the (higher) critical load for an ANC of 20 μeq/L (severe) (US EPA, 2009, section 4.2.4.2). This information indicates that almost half of the 44 lakes in the Adirondacks case study area are at an elevated concern level, and almost a third are at a severe concern level. These levels are associated with greatly diminished fish species diversity, and losses in the health and reproductive capacity of remaining populations. Based on assessments of the relationship between number of fish species and ANC level in both the Adirondacks and Shenandoah areas, the number of fish species is decreased by over half at an ANC level of 20 μeq/L relative to an ANC level at 100 μeq/L (US EPA, 2009, Figure 4.2–1). When extrapolated to the full population of lakes in the Adirondacks area using weights based on the EMAP probability survey (US EPA, 2009, section 4.2.6.1), 36 percent of lakes exceeded the critical load for an ANC of 50 μeq/L and 13 percent of lakes exceeded the critical load for an ANC of 20 μeq/L.

Many streams in the Shenandoah case study area also have levels of deposition that are associated with ANC levels classified as severe, elevated, or moderate concern. The average ANC under recent conditions for the 60 streams evaluated in the Shenandoah case study area is 57.9 μeq/L, indicating moderate concern. However, 85 percent of these streams had recent deposition exceeding the critical load for an ANC of 50 μeq/L, and 72 percent exceeded the critical load for an ANC of 20 μeq/L. As with the Adirondacks area, this information suggests that ANC levels may decline in the future and significant numbers of sensitive streams in the Shenandoah area are at risk of adverse impacts on fish populations if recent conditions persist. Many other streams in the Shenandoah area are also likely to experience conditions of elevated to severe concern based on the prevalence in the area of bedrock geology associated with increased sensitivity to acidification suggesting that effects due to stream acidification could be widespread in the Shenandoah area (US EPA, 2009, section 4.2.6.2).

In addition to these chronic acidification effects, the ISA notes that ''consideration of episodic acidification greatly increases the extent and degree of estimated effects for acidifying deposition on surface waters'' (US EPA, 2008, section 3.2.1.6). Some studies show that the number of lakes that could be classified as acid-impacted based on episodic acidification is 2 to 3 times the number of lakes classified as acid-impacted based on chronic ANC. These episodic acidification events can have long term effects on fish populations (US EPA, 2008, section 3.2.1.6). Under recent conditions, episodic acidification has been observed in locations in the eastern U.S. and in the mountainous western U.S. (US EPA, 2008, section 3.2.1.6).

The ISA, REA and PA all conclude that the current standards are not adequate to protect against the adverse impacts of aquatic acidification on sensitive ecosystems. A recent survey, as reported in the ISA, found sensitive streams in many locations in the U.S., including the Appalachian Mountains, the Coastal Plain, and the Mountainous West (US EPA, 2008, section 4.2.2.3). In these sensitive areas, between 1 and 6 percent of stream kilometers are chronically acidified. The REA further concludes that both the Adirondack and Shenandoah case study areas are currently receiving deposition from ambient oxides of nitrogen and sulfur in excess of their ability to neutralize such inputs. In addition, based on the current emission scenarios, forecast modeling out to the year 2020 as well as 2050 indicates a large number of streams in these areas will still be adversely impacted (section II.B). Based on these considerations, the PA concludes that the current secondary NAAQS for oxides of nitrogen and sulfur do not provide adequate protection of sensitive ecosystems with regard to aquatic acidification.

ii. Terrestrial Acidification

Based on the terrestrial acidification case studies, Kane Experimental Forest in Pennsylvania and Hubbard Brook Experimental Forest described in section II.B) of sugar maple and red spruce habitat, the REA concludes that there is significant risk to sensitive terrestrial ecosystems from acidification at atmospheric concentrations of NO_2 and SO_2 at or below the current standards. The ecological indicator selected for terrestrial acidification is the BC/Al, which has been linked to tree health and growth. The results of the REA strongly support a relationship between atmospheric deposition of oxides of nitrogen and sulfur and BC/Al, and that BC/Al is a good indicator of terrestrial acidification. At levels of deposition associated with oxides of nitrogen and sulfur concentrations at or below the current standards, BC/Al levels are expected to be below benchmark values that are associated with significant effects on tree health and growth. Such degradation of terrestrial ecosystems could affect ecosystem services such as habitat provisioning, endangered species, goods production (timber, syrup, etc.) among others.

Many locations in sensitive areas of the U.S. have BC/Al levels below benchmark levels classified as providing low to intermediate levels of protection to tree health. At a BC/Al ratio of 1.2 (intermediate level of protection), red spruce growth can be reduced by 20 percent. At a BC/Al ratio of 0.6 (low level of protection), sugar maple growth can be decreased by 20 percent. The REA did not evaluate broad sensitive regions. However, in the sugar maple case study area (Kane Experimental Forest), recent deposition levels are associated with a BC/Al ratio below 1.2, indicating between intermediate and low level of protection, which would indicate the potential for a greater than 20 percent reduction in growth. In the red spruce case study area (Hubbard Brook Experimental Forest), recent deposition levels are associated with a BC/Al ratio slightly above 1.2, indicating slightly better than an intermediate level of protection (US EPA, 2009, section 4.3.5.1).

Over the full range of sugar maple, 12 percent of evaluated forest plots exceeded the critical loads for a BC/Al ratio of 1.2, and 3 percent exceeded the critical load for a BC/Al ratio of 0.6. However, there was large variability across states. In New Jersey, 67 percent of plots exceeded the critical load for a

BC/Al ratio of 1.2, while in several states on the outskirts of the range for sugar maple (*e.g.* Arkansas, Illinois) no plots exceeded the critical load for a BC/Al ratio of 1.2. For red spruce, overall 5 percent of plots exceeded the critical load for a BC/Al ratio of 1.2, and 3 percent exceeded the critical load for a BC/Al ratio of 0.6. In the major red spruce producing states (Maine, New Hampshire, and Vermont), critical loads for a BC/Al ratio of 1.2 were exceeded in 0.5, 38, and 6 percent of plots, respectively.

The ISA, REA and PA all conclude that the current standards are not adequate to protect against the adverse impacts of terrestrial acidification on sensitive ecosystems. As stated in the REA and PA, the main drawback, with the understanding of terrestrial acidification lies in the sparseness of available data by which we can predict critical loads and that the data are based on laboratory responses rather than field measurements. Other stressors that are present in the field but that are not present in the laboratory may confound this relationship. The REA does however, conclude that the case study results, when extended to a 27 state region, show that nitrogen and sulfur acidifying deposition in the sugar maple and red spruce forest areas caused the calculated Bc/Al ratio to fall below 1.2 (the intermediate level of protection) in 12 percent of the sugar maple plots and 5 percent of the red spruce plots; however, results from individual states ranged from 0 to 67 percent of the plots for sugar maple and 0 to 100 percent of the plots for red spruce.

iii. Terrestrial Nutrient Enrichment

Nutrient enrichment effects are due to nitrogen loadings from both atmospheric and non-atmospheric sources. Evaluation of nutrient enrichment effects requires an understanding that nutrient inputs are essential to ecosystem health and that specific long term levels of nutrients in a system affect the types of species that occur over long periods of time. Short term additions of nutrients can affect species competition, and even small additions of nitrogen in areas that are traditionally nutrient poor can have significant impacts on productivity as well as species composition. Most ecosystems in the U.S. are nitrogen-limited, so regional decreases in emissions and deposition of airborne nitrogen compounds could lead to some decrease in growth of the vegetation that surrounds the targeted aquatic system but as discussed below evidence for this is mixed. Whether these changes in plant growth are seen as beneficial or adverse will depend on the nature of the ecosystem being assessed.

Information on the effects of changes in nitrogen deposition on forestlands and other terrestrial ecosystems is very limited. The multiplicity of factors affecting forests, including other potential stressors such as ozone, and limiting factors such as moisture and other nutrients, confound assessments of marginal changes in any one stressor or nutrient in forest ecosystems. The ISA notes that only a fraction of the deposited nitrogen is taken up by the forests, most of the nitrogen is retained in the soils (US EPA, 2008, section 3.3.2.1). In addition, the ISA indicates that forest management practices can significantly affect the nitrogen cycling within a forest ecosystem, and as such, the response of managed forests to nitrogen deposition will be variable depending on the forest management practices employed in a given forest ecosystem (US EPA, 2008, Annex C C.6.3). Increases in the availability of nitrogen in nitrogen-limited forests via atmospheric deposition could increase forest production over large non-managed areas, but the evidence is mixed, with some studies showing increased production and other showing little effect on wood production (US EPA, 2008, section 3.3.9). Because leaching of nitrate can promote cation losses, which in some cases create nutrient imbalances, slower growth and lessened disease and freezing tolerances for forest trees, the net effect of increased N on forests in the U.S. is uncertain (US EPA, 2008, section 3.3.9).

The scientific literature has many examples of the deleterious effects caused by excessive nitrogen loadings to terrestrial systems. Several studies have set benchmark values for levels of N deposition at which scientifically adverse effects are known to occur. Large areas of the country appear to be experiencing deposition above these benchmarks. The ISA indicates studies that have found that at 3.1 kg N/ha/yr, the community of lichens begins to change from acidophytic to tolerant species; at 5.2 kg N/ha/yr, the typical dominance by acidophytic species no longer occurs; and at 10.2 kg N/ha/yr, acidophytic lichens are totally lost from the community. Additional studies in the Colorado Front Range of the Rocky Mountain National Park support these findings. These three values (3.1, 5.2, and 10.2 kg/ha/yr) are one set of ecologically meaningful benchmarks for the mixed conifer forest (MCF) of the pacific coast regions. Nearly all of the known sensitive communities receive total nitrogen deposition levels above the 3.1 N kg/ha/yr ecological benchmark according to the 12 km, 2002 CMAQ/NADP data, with the exception of the easternmost Sierra Nevadas. The MCFs in the southern portion of the Sierra Nevada forests and nearly all MCF communities in the San Bernardino forests receive total nitrogen deposition levels above the 5.2 N kg/ha/yr ecological benchmark.

Coastal Sage Scrub communities are also known to be sensitive to community shifts caused by excess nitrogen loadings. Studies have investigated the amount of nitrogen utilized by healthy and degraded CSS systems. In healthy stands, the authors estimated that 3.3 kg N/ha/yr was used for CSS plant growth. It is assumed that 3.3 kg N/ha/yr is near the point where nitrogen is no longer limiting in the CSS community and above which level community changes occur, including dominance by invasive species and loss of coastal sage scrub. Therefore, this amount can be considered an ecological benchmark for the CSS community. The majority of the known CSS range is currently receiving deposition in excess of this benchmark. Thus, the REA concludes that recent conditions where oxides of nitrogen ambient concentrations are at or below the current oxides of nitrogen secondary standards are not adequate to protect against anticipated adverse impacts from N nutrient enrichment in sensitive ecosystems.

iv. Aquatic Nutrient Enrichment

The REA aquatic nutrient enrichment case studies focused on coastal estuaries and revealed that while current ambient loadings of atmospheric oxides of nitrogen are contributing to the overall depositional loading of coastal estuaries, other non-atmospheric sources are contributing in far greater amounts in total, although atmospheric contributions are as large as some other individual source types. The ability of current data and models to characterize the incremental adverse impacts of nitrogen deposition is limited, both by the available ecological indicators, and by the inability to attribute specific effects to atmospheric sources of nitrogen. The REA case studies used ASSETS EI as the ecological indicator for aquatic nutrient enrichment. This index is a six level index characterizing overall eutrophication risk in a water body. This indicator is not sensitive to changes in nitrogen deposition within a single level of the index. In addition, this type of indicator does not reflect the impact of nitrogen deposition in conjunction with other sources of nitrogen.

Based on the above considerations, the REA concludes that the ASSETS EI is not an appropriate ecological indicator for estuarine aquatic eutrophication and that additional analysis is required to develop an appropriate indicator for determining the appropriate levels of protection from N nutrient enrichment effects in estuaries related to deposition of oxides of nitrogen. As a result, EPA is unable to make a determination as to the adequacy of the existing secondary oxides of nitrogen standard in protecting public welfare from nitrogen nutrient enrichment effects in estuarine aquatic ecosystems.

Additionally, nitrogen deposition can alter species composition and cause eutrophication in freshwater systems. In the Rocky Mountains, for example, deposition loads of 1.5 to 2 kg/ha/yr which are well within current ambient levels are known to cause changes in species composition in diatom communities indicating impaired water quality (US EPA, 2008, section 3.3.5.3). This suggests that the existing secondary standard for oxides of nitrogen does not protect such ecosystems and their resulting services from impairment.

v. Other Effects

An important consideration in looking at the effects of deposition of oxides of sulfur in aquatic ecosystems is the potential for production of MeHg, a neurotoxic contaminant. The production of meaningful amounts of MeHg requires the presence of SO_4^{2-} and mercury, and where mercury is present, increased availability of SO_4^{2-} results in increased production of MeHg. There is increasing evidence on the relationship between sulfur deposition and increased methylation of mercury in aquatic environments; this effect occurs only where other factors are present at levels within a range to allow methylation. The production of MeHg requires the presence of SO_4^{2-} and mercury, but the amount of MeHg produced varies with oxygen content, temperature, pH and supply of labile organic carbon (US EPA, 2008, section 3.4). In watersheds where changes in sulfate deposition did not produce an effect, one or several of those interacting factors were not in the range required for meaningful methylation to occur (US EPA, 2008, section 3.4). Watersheds with conditions known to be conducive to mercury methylation can be found in the northeastern United States and southeastern Canada (US EPA, 2009, section 6).

With respect to sulfur deposition and mercury methylation, the final ISA determined that ''[t]he evidence is sufficient to infer a causal relationship between sulfur deposition and increased mercury methylation in wetlands and aquatic environments.'' However, EPA did not conduct a quantitative assessment of the risks associated with increased mercury methylation under current conditions. As such, EPA is unable to make a determination as to the adequacy of the existing SO_2 secondary standards in protecting against welfare effects associated with increased mercury methylation.

vi. Summary of Adequacy Considerations

In summary, the PA concludes that currently available scientific evidence and assessments clearly call into question the adequacy of the current standards with regard to deposition-related effects on sensitive aquatic and terrestrial ecosystems, including acidification and nutrient enrichment. Further, the PA recognizes that the elements of the current standards—indicator, averaging time, level and form—are not ecologically relevant, and are thus not appropriate for standards designed to provide such protection. Thus, the PA concludes that consideration should be given to establishing a new ecologically relevant multi-pollutant, multimedia standard to provide appropriate protection from deposition-related ecological effects of oxides of nitrogen and sulfur on sensitive ecosystems, with a focus on protecting against adverse effects associated with acidifying deposition in sensitive aquatic ecosystems.

3. CASAC Views

In a letter to the Administrator (Russell and Samet 2011a), the CASAC Oxides of Nitrogen and Oxides of Sulfur Panel, with full endorsement of the chartered CASAC, unanimously concluded that:

> EPA staff has demonstrated through the Integrated Science Assessment (ISA), Risk and Exposure Characterization (REA) and the draft PA that ambient NO_X and SO_X can have, and are having, adverse environmental impacts. The Panel views that the current NO_X and SO_X secondary standards should be retained to protect against direct adverse impacts to vegetation from exposure to gas phase exposures of these two families of air pollutants. Further, the ISA, REA and draft PA demonstrate that adverse impacts to aquatic ecosystems are also occurring due to deposition of NO_X and SO_X. Those impacts include acidification and undesirable levels of nutrient enrichment in some aquatic ecosystems. The levels of the current NO_X and SO_X secondary NAAQS are not sufficient, nor the forms of those standards appropriate, to protect against adverse depositional effects; thus a revised NAAQS is warranted.

In addition, with regard to the joint consideration of both oxides of nitrogen and oxides of sulfur as well as the consideration of deposition related effects, CASAC concluded that the PA had developed a credible methodology for considering such effects. The Panel stated that ''the Policy Assessment develops a framework for a multi-pollutant, multimedia standard that is ecologically relevant and reflects the combined impacts of these two pollutants as they deposit to sensitive aquatic ecosystems.''

4. Administrator's Proposed Conclusions Concerning Adequacy of Current Standard

Based on the above considerations and taking into account CASAC advice, the Administrator recognizes that the purpose of the secondary standard is to protect against ''adverse'' effects resulting from exposure to oxides of nitrogen and sulfur, discussed above in section II.A. The Administrator also recognizes the need for conclusions as to the adequacy of the current standards for both direct and deposition related effects as well as conclusions as to the appropriateness and ecological relevance of the current standards.

In considering what constitutes an ecological effect that is also adverse to the public welfare, the Administrator took into account the ISA conclusions regarding the nature and strength of the effects evidence, the risk and exposure assessment results, the degree to which the associated uncertainties should be considered in interpreting the results, the conclusions presented in the PA, and the views of CASAC and members of the public. On these bases, the Administrator concludes that the current secondary standards are adequate to protect against direct phytotoxic effects on vegetation. Thus, the Administrator proposes to retain the current secondary standard for oxides of nitrogen at 53 ppb,[4] annual average concentration, measured in the ambient air as NO_2, and the current secondary standard for oxides of sulfur at 0.5 ppm,

[4] The annual secondary standard for oxides of nitrogen is being specified in units of ppb to conform to the current version of the annual primary standard, as specified in the final rule for the most recent review of the NO_2 primary NAAQS (75 FR 6531; February 9, 2010).

3-hour average concentration, measured in the ambient air as SO_2.

With regard to deposition-related effects, the Administrator has first to consider the appropriateness of the structure of the current standards to address ecological effects of concern. Based on the evidence as well as considering the advice given by CASAC on this matter, the Administrator concludes that the elements of the current standards are not ecologically relevant and thus are not appropriate to provide protection of ecosystems. On the subject of adequacy of protection with regard to deposition-related effects, the Administrator considered the full nature of ecological effects related to the deposition of ambient oxides of nitrogen and sulfur into sensitive ecosystems across the country. Her conclusions are based on the evidence presented in the ISA with regard to acidification and nutrient enrichment effects, the findings of the REA with regard to scope and severity of the current and likely future effects of deposition, the synthesis of both the scientific evidence and risk and exposure results in the PA as to the adequacy of the current standards, and the advice of both CASAC and the public. After such consideration, the Administrator concludes that current levels of oxides of nitrogen and sulfur are sufficient to cause acidification of both aquatic and terrestrial ecosystems, nutrient enrichment of terrestrial ecosystems and contribute to nutrient enrichment effects in estuaries that could be considered adverse, and the current secondary standards do not provide adequate protection from such effects.

Having reached these conclusions, the Administrator determines that it is appropriate to consider alternative standards that are ecologically relevant. These considerations support the conclusion that the current secondary standards is neither appropriate nor adequate to protect against deposition related effects. The Administrator's consideration of such alternative standards is discussed below in Section III.

III. Rationale for Proposed Decision on Alternative Multi-Pollutant Approach to Secondary Standards for Aquatic Acidification

Having reached the conclusion that the current NO_2 and SO_2 secondary standards are not adequate to provide appropriate protection against deposition-related effects associated with oxides of nitrogen and sulfur, the Administrator then considered what new multi-pollutant standard might be appropriate, at this time, to address such effects on public welfare. The Administrator recognizes that the inherently complex and variable linkages between ambient concentrations of nitrogen and sulfur oxides, the related deposited forms of nitrogen and sulfur, and the ecological responses that are associated with public welfare effects call for consideration of an ecologically relevant design of a standard that reflects these linkages. The Administrator also recognizes that characterization of such complex and variable linkages will necessarily require consideration of information and analyses that have important limitations and uncertainties.

Despite its complexity, an ecologically relevant multi-pollutant standard to address deposition-related effects could still appropriately be defined in terms of the same basic elements that are used to define any NAAQS—indicator, form, averaging time, and level. The form would incorporate additional structural elements that reflect relevant multi-pollutant and multimedia attributes. These structural elements include the use of an ecological indicator, tied to the ecological effect we are focused on, and other elements that account for ecologically relevant factors other than ambient air concentrations. All of these elements would be needed to enable a linkage from ambient air indicators to the ecological indicator to define an ecologically relevant standard. As a result, such a standard would necessarily be more complex than the NAAQS that have been set historically to address effects associated with ambient concentrations of a single pollutant.

More specifically, the Administrator considered an ecologically relevant multi-pollutant standard to address effects associated with acidifying deposition related to ambient concentrations of oxides of nitrogen and sulfur in sensitive aquatic ecosystems. This focus is consistent with the information presented in the ISA, REA, and PA, which highlighted the sufficiency of the quantity and quality of the available evidence and assessments associated with aquatic acidification relative to the information and assessments available for other deposition-related effects, including terrestrial acidification and aquatic and terrestrial nutrient enrichment. Based on its review of these documents, CASAC agreed that aquatic acidification should be the focus for developing a new multi-pollutant standard in this review. In reaching conclusions about an air quality standard designed to address deposition-related aquatic acidification effects, the Administrator also recognizes that such a standard may also provide some degree of protection against other deposition-related effects.

As discussed in chapter 7 of the PA, the development of a new multi-pollutant standard to address deposition-related aquatic acidification effects recognizes the need for consideration of a nationally applicable standard for protection against adverse effects of aquatic acidification on public welfare, while recognizing the complex and heterogeneous interactions between ambient air concentrations of nitrogen and sulfur oxides, the related deposition of nitrogen and sulfur, and associated ecological responses. The development of such a standard also needs to take into account the limitations and uncertainties in the available information and analyses upon which characterization of such interactions are based. The approach used in the PA also recognizes that while such a standard would be national in scope and coverage, the effects to public welfare from aquatic acidification will not occur to the same extent in all locations in the U.S., given the inherent variability of the responses of aquatic systems to the effects of acidifying deposition.

As discussed above in section II, many locations in the U.S. are naturally protected against acid deposition due to underlying geological conditions. Likewise, some locations in the U.S., including lands managed for commercial agriculture and forestry, are not likely to be negatively impacted by current levels of nitrogen and sulfur deposition. As a result, while a new ecologically relevant secondary standard would apply everywhere, it would be structured to account for differences in the sensitivity of ecosystems across the country. This would allow for appropriate protection of sensitive aquatic ecosystems, which are relatively pristine and wild and generally in rural areas, and the services provided by such sensitive ecosystems, without requiring more protection than is needed elsewhere.

As discussed below, the multi-pollutant standard developed in the PA would employ (1) total reactive oxidized nitrogen (NO_y) and SO_X as the atmospheric ambient air indicators; (2) a form that takes into account variable factors, such as atmospheric and ecosystem conditions that modify the amounts of deposited nitrogen and sulfur; the distinction between oxidized and reduced forms of nitrogen; effects of deposited nitrogen and sulfur on aquatic ecosystems in terms of the ecological indicator ANC; and the

representativeness of water bodies within a defined spatial area; (3) a multi-year averaging time, and (4) a standard level defined in terms of a single, national target ANC value that, in the context of the above form, identifies the levels of concentrations of NO_y and SO_X in the ambient air that would meet the standard. The form of such a standard has been defined by an index, AAI, which reflects the relationship between ambient concentrations of NO_y and SO_X and aquatic acidification effects that result from nitrogen and sulfur deposition related to these ambient concentrations.

In presenting the considerations associated with such an air quality standard to address deposition-related aquatic acidification effects, the following sections focus on each element of the standard, including indicator (section III.A), form (section III.B), averaging time (section III.C), and level (section III.D). Alternative combinations of levels and forms are discussed in section II*I.E.* Considerations related to important uncertainties inherent in such an approach are discussed in section III.F. Advice from CASAC on such a new standard is presented in section III.G. The Administrator's proposed decisions on such a new standard are presented in section III.H.

A. Ambient Air Indicators

In considering alternative ambient air indicators, the PA primarily focuses on the important attribute of association. Association in a broad sense refers to how well an ambient air indicator relates to the ecological effects of interest by virtue of both the framework that links the ambient indicator and effects and the empirical evidence that quantifies the linkages. The PA also considers how measurable or quantifiable an indicator is to enable its use as an effective indicator of relevant ambient air concentrations.

As discussed above in section II.C, the PA concludes that indicators other than NO_2 and SO_2 should be considered as the appropriate indicators of oxides of nitrogen and sulfur in the ambient air for protection against the acidification effects associated with deposition of the associated nitrogen and sulfur. This conclusion is based on the recognition that all forms of nitrogen and sulfur in the ambient air contribute to deposition and resulting acidification, and as such, NO_2 and SO_2 are incomplete indicators. In principle, the ambient indicators should represent the species that are associated with oxides of nitrogen and sulfur in the ambient air and can contribute acidifying deposition. This includes both the species of oxides of nitrogen and sulfur that are directly emitted as well as species transformed in the atmosphere from oxides of nitrogen and sulfur that retain the nitrogen and sulfur atoms from directly emitted oxides of nitrogen and sulfur. All of these compounds are associated with oxides of nitrogen and sulfur in the ambient air and can contribute to acidifying deposition.

The PA focuses in particular on the various compounds with nitrogen or sulfur atoms that are associated with oxides of nitrogen and sulfur, because the acidifying potential is specific to nitrogen and sulfur, and not other atoms (*e.g.,* H, C, O) whether derived from the original source of oxides of nitrogen and sulfur emissions or from atmospheric transformations. For example, the acidifying potential of each molecule of NO_2, NO, HNO_3 or PAN is identical, as is the potential for each molecule of SO_2 or ion of particulate sulfate, p-SO_4. Each atom of sulfur affords twice the acidifying potential of each atom of nitrogen.

1. Oxides of Sulfur

As discussed in the PA (US EPA, 2011, section 7.1.1), oxides of sulfur include the gases sulfur monoxide (SO), SO_2, sulfur trioxide (SO_3), disulfur monoxide (S_2O), and particulate-phase sulfur compounds (referred to as SO_4) that result from gas-phase sulfur oxides interacting with particles. However, the sum of SO_2 and SO_4 does represent virtually the entire ambient air mass of sulfur that contributes to acidification. In addition to accounting for virtually all the potential for acidification from oxidized sulfur in the ambient air, there are reliable methods to monitor the concentrations of SO_2 and particulate SO_4. In addition, much of the data used to develop the technical basis for the standard developed in the PA is based on monitoring or modeling of these species.[5] The PA concludes that the sum of SO_2 and SO_4, referred to as SO_X, are appropriate ambient air indicators of oxides of sulfur because they represent virtually all of the acidification potential of ambient air oxides of sulfur and there are reliable methods suitable for measuring SO_2 and SO_4.

[5] As discussed in chapter 2 of the PA, SO_2 and particulate SO_4 are routinely measured in ambient air monitoring networks, although only the Clean Air Status and Trends Network (CASTNET) filter packs do not intentionally exclude particle size fractions. The CMAQ treatment of SO_X is the simple addition of both species, which are treated explicitly in the model formulation. All particle size fractions are included in the CMAQ SO_X estimates.

2. Oxides of Nitrogen

As discussed in the PA (US EPA, 2011, section 7.1.2), NO_y, as defined in chapter 2 of the PA, incorporates basically all of the oxidized nitrogen species that have acidifying potential and as such, NO_y should be considered as an appropriate indicator for oxides of nitrogen. Total reactive oxidized nitrogen is an aggregate measure of NO and NO_2 and all of the reactive oxidized products of NO and NO_2. That is, NO_y is a group of nitrogen compounds in which all of the compounds are either an oxide of nitrogen or compounds in which the nitrogen atoms came from oxides of nitrogen. Total reactive oxidized nitrogen is especially relevant as an ambient indicator for acidification in that it both relates to the oxides of nitrogen in the ambient air and also represents the acidification potential of all oxidized nitrogen species in the ambient air, whether an oxide of nitrogen or derived from oxides of nitrogen.

There are currently available reliable methods of measuring aggregate NO_y. The term ''aggregate'' measure means that the NO_y, as measured, is not based on measuring each individual species of NO_y and calculating an NO_y value by summing the individual species. Rather, as described in chapter 2 of the PA, current measurement techniques process all of the individual NO_y species to produce a single aggregate measure of all of the nitrogen atoms associated with any NO_y species. Consequently, the NO_y measurement effectively provides the sum of all individual species, but the identity of the individual species is lost. As discussed above, the accounting for the individual nitrogen atoms is an accounting of the ambient air acidification potential of oxides of nitrogen and their transformation products and therefore the most relevant ambient indicator for aquatic acidification effects associated with oxides of nitrogen.

This loss of the information on individual species motivated consideration of alternative or more narrowly defined indicators for oxides of nitrogen in the PA. Consideration of a subset of NO_y species was based on the following reasoning. First, the actual dry deposition of nitrogen is determined on an individual species basis by multiplying the species concentration times a species-specific deposition velocity and then summed to develop an estimate of total dry deposition. Consequently, the use of individual ambient species has the potential to be more consistent with the underlying

science of deposition and, therefore, has the potential to allow for a more rigorous evaluation of dry deposition with specialized field studies. In addition, there has been a suggestion of focusing only on the most quickly depositing NO_y species, such as HNO_3, as contributions from other NO_y species such as NO_2 may be negligible. These alternative indicators are discussed below.

The PA considers the relative merits of using each individual NO_y species as part of a group of indicators. In so doing, it was first noted that dry deposition of NO_y is treated as the sum of the deposition of each individual species in advanced process-based air quality models like CMAQ, as described in chapter 2 of the PA. Conceptually one could extend this process-based approach by using all NO_y species individually as separate indicators for oxides of nitrogen and requiring, for example, measurements of each of the species, including the dominant species of HNO_3, particulate nitrate (p-NO_3), true NO_2, NO and PAN. The potential attraction of using individual species would be the reliance on actual deposition velocities. This could have more physical meaning in comparison to a constructed model of aggregate deposition of NO_y, which is difficult to evaluate with observations because of the assimilation of many species with disparate deposition behavior. The PA notes that the major drawback of using individual NO_y species as the indicators is the lack of reliable measurement techniques, especially for PAN and NO_2 in rural locations, which renders the use of virtually any individual NO_y species, except for NO and perhaps p-NO_3, as functionally inadequate from a measurement perspective.

The PA next considered the relative merits of using a subset of NO_y species as the indicators for oxides of nitrogen, as was discussed above for oxides of sulfur. To the extent that certain species provide relatively minor contributions to total NO_y deposition, it may be appropriate to consider excluding them as part of the indicator. As discussed in chapter 2 of the PA, each nitrogen species within the array of NO_y species has species-specific dry deposition velocities. For example, the deposition velocity of HNO_3 is much greater than the velocity for NO_2 and, consequently, for a similar ambient air concentration, HNO_3 contributes more deposition of acidifying nitrogen relative to NO_2. In transitioning from source-oriented urban locations to rural environments, the ratio of the concentrations of HNO_3 and PAN to NO_2 increases.

Based on the reasoning that a larger fraction of the deposited NO_y is accounted for by total nitrate (the sum of HNO_3 and p-NO_3), a surrogate for the more rapidly depositing fraction of NO_y, combined with the availability of reliable total nitrate measurements through the CASTNET, the PA considered using total nitrate as the indicator for oxides of nitrogen (US EPA, 2011, appendix E). Nitrate would be expected to correlate well with total reactive oxidized nitrogen deposition relative to NO_y (US EPA, 2011, chapter 2) despite the inherent noise associated with variable contributions of low deposition velocity species (*e.g.,* NO_2) that may have relatively high ambient concentrations. However, modeling simulations suggest that NO_y may be a more robust indicator, relative to HNO_3, in terms of relating absolute changes in ambient air concentrations to changes in nitrogen deposition driven by changes in ambient concentrations of oxides of nitrogen (US EPA, 2011, Figure 2–32).

Based on the above considerations, the PA concludes that NO_y should be considered as the appropriate ambient indicator for oxides of nitrogen based on its direct relationship to oxides of nitrogen in the ambient air and its direct relationship to deposition associated with aquatic acidification. Because NO_y represents all of the potentially acidifying oxidized nitrogen species in the ambient air, it is appropriately associated with the deposition of potentially acidifying compounds associated with oxides of nitrogen in the ambient air. In addition, there are reliable methods available to measure NO_y. Measurement of each individual species of NO_y, or the measurement of only a subset of species of NO_y, is less appropriate because there are not reliable measurements methods available to measure all of the individual species of NO_y and a subset of species would fail to account for significant portions of the oxidized reactive nitrogen that relate to acidification.[6]

B. Form

Based on the evidence of the aquatic acidification effects caused by the deposition of NO_y and SO_X, the PA (US EPA, 2011, section 7.2) presents the development of a new form that is ecologically relevant for addressing such effects. The conceptual design for the form of such a standard includes three main components: an ecological indicator, deposition metrics that relate to the ecological indicator, and a function that relates ambient air indicators to deposition metrics. Collectively, these three components link the ecological indicator to ambient air indicators, as illustrated above in Fig II–1.

The simplified flow diagram in Figure II–1 compresses the various atmospheric, biological, and geochemical processes associated with acidifying deposition to aquatic ecosystems into a simplified conceptual picture. The ecological indicator (left box) is related to atmospheric deposition through biogeochemical ecosystem models (middle box), which associate a target deposition load to a target ecological indicator. Once a target deposition is established, associated allowable air concentrations are determined (right box) through the relationships between concentration and deposition that are embodied in air quality models such as CMAQ. The following discussion describes the development and rationale for each of these components, as well as the integration of these components into the full expression of the form of the standard using the concept of a national AAI that represents a target ANC level as a function of ambient air concentrations. Spatial aggregation issues associated with defining each of the terms of this index are also addressed below.

The AAI is designed to be an ecologically relevant form of the standard that determines the levels of NO_y and SO_X in the ambient air that would achieve a target ANC limit for the U.S. The intent of the AAI is to weight atmospheric concentrations of oxides of nitrogen and sulfur by their propensity to contribute to acidification through deposition, given the fundamental acidifying potential of each pollutant, and to take into account the ecological factors that govern acid sensitivity in different ecosystems. The index also accounts for the contribution of reduced nitrogen to acidification. Thus, the AAI encompasses those attributes of specific relevance to protecting ecosystems from the acidifying potential of ambient air concentrations of NO_y and SO_X.

1. Ecological Indicator

In considering alternative ecological indicators, the PA again primarily focuses on the attribute of association. In the case of an ecological indicator for aquatic acidification, association refers to the relationship between the indicator and adverse effects as discussed in section II. Because of the conceptual structure of the form of an

[6] The PA also notes that NO_y is a useful measurement for model evaluation purposes, which is especially important, recognizing the unique role that CMAQ plays in the development of this standard, as described below in section III.B.

AAI-based standard (Figure III–1), this particular ecological indicator must also link up in a meaningful and quantifiable manner with acidifying atmospheric deposition. In effect, the ecological indicator for aquatic acidification is the bridge between biological impairment and deposition of NO_y and SO_X.

This section presents the rationale in the PA for selecting ANC as the appropriate ecological indicator for consideration. Recognizing that ANC is not itself the causative or toxic agent for adverse aquatic acidification effects, the rationale for using ANC as the relevant ecological indicator is based on the following:

(1) The ANC is directly associated with the causative agents, pH and dissolved Al, both through empirical evidence and mechanistic relationships;

(2) Empirical evidence shows very clear and strong relationships between adverse effects and ANC;

(3) The ANC is a more reliable indicator from a modeling perspective, allowing use of a body of studies and technical analyses related to ANC and acidification to inform the development of the standard; and

(4) The ANC literally embodies the concept of acidification as posed by the basic principles of acid base chemistry and the measurement method used to estimate ANC and, therefore, serves as a direct index to protect against acidification.

Ecological indicators of acidification in aquatic ecosystems can be chemical or biological components of the ecosystem that are altered by the acidifying effects of nitrogen and sulfur deposition. A desirable ecological indicator for aquatic acidification is one that is measurable or estimable, linked causally to deposition of nitrogen and sulfur, and linked causally, either directly or indirectly to ecological effects known or anticipated to adversely affect public welfare.

As summarized in chapter 2 of the PA, atmospheric deposition of NO_y and SO_X causes aquatic acidification through the input of strong acid anions (*e.g.,* NO_3^- and SO_4^{2-}) that ultimately shifts the water chemistry equilibrium toward increased hydrogen ion levels (or decreased pH). The anions are deposited either directly to the aquatic ecosystem or indirectly via transformation through soil nitrification processes and subsequent drainage from terrestrial ecosystems. In other words, when these anions are mobilized in the terrestrial soil, they can leach into adjacent water bodies. Aquatic acidification is indicated by changes in the surface water chemistry of ecosystems. In turn, the alteration of surface water chemistry has been linked to negative effects on the biotic integrity of freshwater ecosystems. There is a suite of chemical indicators that could be used to assess the effects of acidifying deposition on lake or stream acid-base chemistry. These indicators include ANC; alkalinity (ALK); base neutralizing capacity, commonly referred to as acidity (ACY); surface water pH; concentrations of trivalent aluminum, Al^{+3}; and concentrations of major anions (SO_4^{2-}, NO_3^-), cations (Ca^{2+}, Mg^{+2}, K^+), or sums of cations or anions.

The ANC and ALK are very similar quantities and are used interchangeably in the literature and for some of the analyses presented in this document. Both ANC and ALK are defined as the amount of strong acid required to reach a specified equivalence point. For acid-base solutions, an equivalence point can be thought of as the point at which the addition of strong acids (*i.e.,* titration) is no longer neutralized by the solution. This explains the term acid neutralizing capacity, or ANC, as ANC relates directly to the capacity of a system to neutralize acids. The differences between ANC and ALK are based on operational definitions and subject to various interpretations. The ANC is preferred over ALK as the body of scientific evidence has focused on ANC and effects relationships. The ALK is more widely associated with more general characterizations of water quality such as the relative hardness of water associated with carbonates.

Indictors such as the concentrations of specific anions, cations, or their groupings, while relevant to acidification processes, are not robust acidification indicators as it is the relative balance of cations and anions that is more directly associated with acidification. That balance is captured by ANC and ALK. Acidity, ACY, is the converse of ANC and indicates how much strong base it takes to reach an equivalence point. Because ACY is not used in most ecosystem assessments, the body of information relating ACY to effects is too limited to serve as a basis for an appropriate ecological indicator. Aluminum and other metals are causative toxic agents that directly impair biological functions. However, Al, or metals in general, have high variability in concentrations that can be linked to effects, often at extremely low levels which in some cases approach detectability limits, exhibit rapid transient responses, and are often confounded by the presence of other toxic metals. These concerns limit the use of metals as reliable and measurable ecological indicators. Hydrogen ion (H^+) concentrations, using their negative logarithmic values, or pH, are well correlated with adverse effects, as discussed above in section II.A, and determine the solubility of metals such as aluminum. However, pH is not a preferred acidification indicator due to its highly transient nature and other concerns, as discussed below.

Having reasoned that ANC is a preferred indicator to ALK, ACY, individual metals or groupings of ions, the PA considers the relative merits of ANC compared to pH, which is a well recognized indicator of acidity and a more direct causative agent with regard to adverse effects. First, the linkage between ANC and pH is considered in recognition of the causative association between pH and effects.

The ANC is not the direct causative toxic agent impacting aquatic species diversity. The scientific literature generally emphasizes the links between pH and adverse effects as described above in section II.A. It is important, therefore, to consider the extent to which ANC and pH are well related from a mechanistic perspective as well as through empirical evidence. The ANC and pH are co-dependent on each other based on the requirement that all solutions are electrically neutral, meaning that any solution must satisfy the condition that all negatively charged species must be balanced by all positively charged species. The ANC is defined as the difference between strong anions and cations (US EPA, 2011, equation 7–13).

While the chemistry can be complex, the co-dependency between ANC and pH is explained by recognizing that positively charged hydrogen, H^+, is incorporated in the charge balance relationships related to the overall solution chemistry which also defines ANC. The positive, directional co-dependency (*i.e.,* ANC and pH increase together) is further explained in concept as ANC reflects how much strong acid (*i.e.,* how much hydrogen ion) it takes to titrate to an equivalence point. Strong observed correlations between pH and ANC as described in the PA support these mechanistic relationships.

As discussed above in section II.A, there are well established examples of ANC correlating strongly with a variety of ecological effects which are summarized in the PA (US EPA, 2011, Table 3–1). Because pH and ANC are well correlated and linearly dependent over the pH ranges (4.5–6) where adverse ecological effects are observed, evidence of clear associations exist between ANC and adverse ecological effects as described in the PA. In large measure, this dependence between pH

and ANC and the relationship of both pH and ANC to effects, speak directly to the appropriateness of ANC with respect to its use as an ecological indicator.

Thus, there is a clear association between ANC and ecological effects, although there is a more direct causal relationship between pH and ecological effects. Nonetheless, ANC is preferred as an ecological indicator based on its superior ability to provide a linkage with deposition in a meaningful and quantifiable manner, a role that is served far more effectively by ANC than by pH. While both ANC and pH are clearly associated with the effects of concern, ANC is superior in linking these effects to deposition.

The PA notes that the basis for this conclusion is that acidifying atmospheric deposition of nitrogen and sulfur is a direct input of potential acidity (ACY), or, in terms of ANC, such deposition is relevant to the major anions that reduce the capacity of a water body to neutralize acidity. Consequently, there is a well defined linear relationship between potential acidifying deposition and ANC. This ANC-deposition relationship facilitates the linkage between ecosystem models that calculate an ecological indicator and the atmospheric deposition of NO_y and SO_X. On the other hand, there is no direct linear relationship between deposition and pH. While acid inputs from deposition lower pH, the relationship can be extremely nonlinear and there is no direct connection from a modeling or mass balance perspective between the amount of deposition entering a system and pH. The term ''mass balance'' underlies the basic formulation of any physical modeling construct, for atmospheric or aquatic systems, and refers to the accounting of the flow of mass into a system, the transformation to other forms, and the loss due to flow out of a system and other removal processes. The ANC is a conserved property. This means that ANC in a water body can be accounted for by knowledge of how much ANC initially exists, how much flows in and is deposited, and how much flows out. In contrast, hydrogen ion concentration in the water, the basis for pH, is not a conserved property as its concentration is affected by several factors such as temperature, atmospheric pressure, mixing conditions of a water body, and the levels of several other chemical species in the system. The disadvantage of pH lacking conservative properties is that there is a very complex connection between changes in ambient air concentrations of NO_y and SO_X and pH.

The discussion of basic water chemistry of natural systems in chapter 2 of the PA provides further details on why pH is not a conserved quantity and is subject to rapid transient response behavior that makes it difficult to use as a reliable and functional ecological indicator. The observed pH-to-ANC relationship (US EPA, 2011, figure 7–2) partially explains the concern with pH responding too abruptly. In the region where pH ranges roughly from 4.5 to 6 and is of greatest relevance to effects (US EPA, 2011, figure 7–4), there clearly is more sensitivity of pH to changes in ANC in the ANC range from approximately 0 to 50 μeq/L. A focus on this part of the ANC-to-pH relationship shows that ANC associates well with pH in a fairly linear manner. However, the pH range from 4.5 to 6 also includes one of the very steepest parts of the slope relating pH as a function of ANC, where ANC ranges down below 0 μeq/L, which is subject to very rapid change in ANC, or deposition inputs. This part of the relationship coincides with reduced levels of ANC and hence with reduced ability to neutralize acids and moderate pH fluctuations. This response behavior can be extended to considering how pH would change in response to deposition, or ambient concentrations, of NO_y and SO_X, which can be viewed as ''ANC-like'' inputs.

In summary, because ANC clearly links both to biological effects of aquatic acidification as well as to acidifying inputs of NO_y and SO_X deposition, the PA concludes that ANC is an appropriate ecological indicator for relating adverse aquatic ecosystem effects to acidifying atmospheric deposition of SO_x and NO_y, and is preferred to other potential indicators. In reaching this conclusion, the PA notes that in its review of the first draft PA, CASAC concluded that ''information on levels of ANC protective to fish and other aquatic biota has been well developed and presents probably the lowest level of uncertainty in the entire methodology'' (Russell and Samet, 2010a). In its more recent review of the second draft PA, CASAC agreed ''that acid neutralizing capacity is an appropriate ecological measure for reflecting the effects of aquatic acidification'' (Russell and Samet, 2010b; p. 4).

2. Linking ANC to Deposition

There is evidence to support a quantified relationship between deposition of nitrogen and sulfur and ANC. This relationship was analyzed in the REA for two case study areas, the Adirondack and Shenandoah Mountains, based on time-series modeling and observed trends. In the REA analysis, long-term trends in surface water nitrate, sulfate and ANC were modeled using MAGIC for the two case study areas. These data were used to compare recent surface water conditions in 2006 with preindustrial conditions (*i.e.* preacidification 1860). The results showed a marked increase in the number of acid impacted lakes, characterized as a decrease in ANC levels, since the onset of anthropogenic nitrogen and sulfur deposition, as discussed in chapter 2 of the PA.

In the REA, more recent trends in ANC, over the period from 1990 to 2006, were assessed using monitoring data collected at the two case study areas. In both case study areas, nitrate and sulfate deposition decreased over this time period. In the Adirondack Mountains, this corresponded to a decreased concentration of nitrate and sulfate in the surface waters and an increase in ANC (U.S. EPA, 2009, section 4.2.4.2). In the Shenandoah Mountains, there was a slight decrease in nitrate and sulfate concentration in surface waters corresponding to modest increase in ANC from 50 μeq/L in 1990 to 67 μeq/L in 2006 (U.S. EPA, 2009, section 4.2.4.3, Appendix 4, and section 3.4).

In the REA, the quantified relationship between deposition and ANC was investigated using ecosystem acidification models, also referred to as acid balance models or critical loads models (U.S. EPA, 2011, section 2 and U.S. EPA, 2009, section 4 and Appendix 4). These models quantify the relationship between deposition of nitrogen and sulfur and the resulting ANC in surface waters based on an ecosystem's inherent generation of ANC and ability to neutralize nitrogen deposition through biological and physical processes. A critical load is defined as the amount of acidifying atmospheric deposition of nitrogen and sulfur beyond which a target ANC is not reached. Relatively high critical load values imply that an ecosystem can accommodate greater deposition levels than lower critical loads for a specific target ANC level. Ecosystem models that calculate critical loads form the basis for linking deposition to ANC.

As discussed in chapter 2 of the PA, both dynamic and steady state models calculate ANC as a function of ecosystem attributes and atmospheric nitrogen and sulfur deposition, and can be used to calculate critical loads. Steady state models are time invariant and reflect the long term consequences associated with an ecosystem reaching equilibrium under a constant level of atmospheric deposition. Dynamic models are time variant and take into account the time dependencies inherent in ecosystem hydrology, soil and

biological processes. Dynamic models like MAGIC can provide the time series response of ANC to deposition whereas steady state models provide a single ANC relationship to any fixed deposition level. Dynamic models naturally are more complex than steady state models as they attempt to capture as much of the fundamental biogeochemical processes as practicable, whereas steady state models depend on far greater parameterization and generalization of processes that is afforded, somewhat, by not having to accounting for temporal variability.

The PA notes that steady state models are capable of addressing the question of what does it take to reach and sustain a specific level of ANC. Dynamic models are also capable of addressing that question, but can also address the question of how long it takes to achieve that result. Dynamic models afford the ability for more comprehensive treatment of a variety of processes throughout the surface, soil and bedrock layers within an ecosystem. For example, steady state models treat sulfate as a mobile anion throughout the system, meaning that the sulfate that is deposited to a watershed enters the water column and is not influenced by soil adsorption or cation exchange. Dynamic models can incorporate these time variant processes. The use of a steady state model treating sulfate as totally mobile does not necessarily conflict with the possibility of sulfate acting as a less than mobile ion at certain times. The steady state assumption is premised on the long term behavior of sulfate which can undergo periods of net adsorption followed by periods of net desorption which can balance out over time. The PA recognizes that as the richness of the available data increases, in terms of parameters and spatial resolution, the incorporation of dynamic modeling approaches in the standard setting process should become more feasible. In determining an appropriate modeling approach for the development of a NAAQS in this review, the PA considers both the relevance of the question addressed as well as the ability to perform modeling that provides relevant information for geographic areas across the country.

Dynamic models require a large amount of catchment level-specific data relative to steady state models. Because of the time invariant nature of steady state models, the data requirements that integrate across a broad spectrum of ecosystem processes is achievable and available now at the national level. Water quality data to support steady state models currently exist for developing a national data base for modeling nearly 10,000 catchments in the contiguous U.S. In contrast, the data needs to support dynamic models for national-scale analyses simply are not available at this time. Further, the information provided by steady state modeling would be sufficient to develop and analyze alternative NAAQS and the kind of protection they would afford. While it would be of interest to also obtain information about how much time it would take for a target ANC level to be achieved, the absence of such information does not preclude developing and evaluating alternative NAAQS using the AAI structure. Based on the above considerations, the PA concludes that at this time steady state critical load modeling is an appropriate tool for linking long-term ANC levels to atmospheric deposition of nitrogen and sulfur for development of an AAI that has national applicability.

A steady state model is used to define the critical load, which is the amount of atmospheric deposition of nitrogen (*N*) and sulfur (*S*) beyond which a target ANC is not achieved and sustained.[7] It is expressed as:

$$CL_{ANClim}(N + S) = ([BC]_0^* - [ANC_{lim}])Q + Neco \qquad \text{(III-1)}$$

Where:

$CL_{ANClim}(N + S)$ is the critical load of deposition, with units of equivalent charge/(area-time);

$[BC]_0^{-*}$ is the natural contribution of base cations from weathering, soil processes and preindustrial deposition, with units of equivalent charge/volume;

$[ANC_{lim}]$ is the target ANC value, with units of equivalent charge/volume; Q is the catchment level runoff rate governed by water mass balance and dominated by precipitation, with units of distance/time; and

Neco is the amount of nitrogen deposition that is effectively neutralized by a variety of biological (*e.g.,* nutrient uptake) and physical processes, with units of equivalent charge/(area-time).

Equation III–1 is a modified expression that adopts the basic formulation of the steady state models that are described in chapter 2 of the PA. More detailed discussion of the rationale, assumptions and derivation of equation III–1, as well as all of the equations in this section, are included in Appendix B of the PA. The equation simply reflects the amount of deposition of nitrogen and sulfur from the atmosphere, $CL_{ANClim}(N + S)$, that is associated with a sustainable long-term ANC target, $[ANC_{lim}]$, given the capacity of the natural system to generate ANC, $[BC]_0^{-*}$, and the capacity of the natural system to neutralize nitrogen deposition, *Neco.* This expression of critical load is valid when nitrogen deposition is greater than *Neco*.[8] The runoff rate, *Q,* allows for balancing mass in the two environmental mediums—atmosphere and catchment. This critical load expression can be focused on a single water system or more broadly. To extend applicability of the critical load expression (equation III–1) from the catchment level to broader spatial areas, the terms Q_r and CL_r, are used, which are the runoff rate and critical load, respectively, of the region over which all the atmospheric terms in the equation are defined.

In considering the contributions of SO_x or NO_y species to acidification, it is useful to think of every depositing nitrogen atom as supplying one equivalent charge unit and every sulfur atom as depositing two charge units. The PA uses equivalent charge per volume as a normalizing tool in place of the more familiar metrics such as mass or moles per volume. This allows for a clearer explanation of many of the relationships between atmospheric and ecosystem processes that incorporate mass and volume unit conventions somewhat specific to the environmental media of concern (*e.g.,* m^3 for air and liter for liquid water). Equivalent charge reflects the chemistry equilibrium fundamentals that assume electroneutrality, or balancing charge where the sum of cations always equals the sum of anions.

As presented above, the terms *S* and *N* in the $CL_{ANClim}(N + S)$ term broadly represent all species of sulfur or nitrogen that can contribute to

[7] This section discusses the linkages between deposition of nitrogen and sulfur and ANC. Section III.B.3 then discusses the linkages between atmospheric concentrations of NO_Y and SO_X and deposition of nitrogen and sulfur.

[8] Because *Neco* is only relevant to nitrogen deposition, in rare cases where *Neco* is greater than the total nitrogen deposition, the critical load would be defined only in terms of acidifying deposition of sulfur and the *Neco* term in equation III–1 would be set to zero.

acidifying deposition. This follows conventions used in the scientific literature that addresses critical loads, and it reflects all possible acidifying contributions from any sulfur or nitrogen species. For all practical purposes, *S* reflects SO_x as described above, the sum of sulfur dioxide gas and particulate sulfate. However, *N* in equation III–1 includes both oxidized forms, consistent with the ambient indicator, NO_y, in addition to the reduced nitrogen species, ammonia and ammonium ion, referred to as NHx. The NH_X is included in the critical load formulation because it contributes to potentially acidifying nitrogen deposition. Consequently, from a mass balance or modeling perspective, the form of the standard needs to account for NH_X, as described below.

3. Linking Deposition to Ambient Air Indicators

The last major component of the form illustrated in Figure III–1 addresses the linkage between deposition of nitrogen and sulfur and concentrations of the ambient air indicators, NO_Y and SO_X. To link ambient air concentrations with deposition, the PA defines a transference ratio, T, as the ratio of total wet and dry deposition to ambient concentration, consistent with the area and time period over which the standard is defined. To express deposition of NO_Y and SO_X in terms of NO_Y and SO_X ambient concentrations, two transference ratios were defined, where T_{SOx} equals the ratio of the combined dry and wet deposition of SO_x to the ambient air concentration of SO_x, and T_{NOY} equals the ratio of the combined dry and wet deposition of NO_Y to the ambient air concentration of NO_Y.

As described in chapter 7 of the PA, reduced forms of nitrogen (NH_x) are included in total nitrogen in the critical load equation, III–1. Reduced forms of nitrogen are treated separately, as are NO_y and SO_x, and the transference ratios are applied. This results in the following critical load expression that is defined explicitly in terms of the indicators NO_Y and SO_x:

$$CL_{ANClim}(N + S) = ([BC]_0^* - [ANC_{lim}])Q + Neco = [NOy]T_{NOy} + [SOx]T_{SOx} + NHx \qquad \text{(III-2)}$$

This is the same equation as III–1, with the deposition associated with the critical load translated to deposition from ambient air concentrations via transference ratios. In addition, deposition of reduced nitrogen, oxidized nitrogen and oxidized sulfur are treated separately.

Transference ratios are a modeled construct, and therefore cannot be compared directly to measurable quantities. There is an analogy to deposition velocity, as a transference ratio is basically an aggregated weighted average of the deposition velocities of all contributing species across dry and wet deposition, and transference ratio units are expressed as distance/time. However, wet deposition commonly is not interpreted as the product of a concentration times a velocity. Direct wet deposition observations are available which integrate all of the processes, regardless of how well they may be understood, related to wet deposition into a measurable quantity. There are reasonable analogies between the processes governing dry and wet deposition, from a fundamental mass transfer perspective. In both cases there is a transfer of mass between the dry ambient phase and another medium, either a surface or vegetation in the case of dry deposition, or a rain droplet or cloud in the case of wet precipitation. The specific thermodynamic properties and chemical/biological reactions that govern the transfer of dry mass to plants or aqueous droplets differ, but either process can be based on conceptualizing the product of a concentration, or concentration difference, times a mass transfer coefficient which is analogous to the basic dry deposition model: dry deposition = concentration × velocity (U.S. EPA, 2011, Appendix F).

Transference ratios require estimates of wet deposition of NO_y and SO_X, dry deposition of NO_Y and SO_X, and ambient air concentrations of NO_Y and SO_x. Possible sources of information include model estimates or a combination of model estimates and observations, recognizing that dry deposition is a modeled quantity that can use observed or modeled estimates of concentration. The limited amount of NO_Y measurements in acid-sensitive areas as well as the combination of representative NO_Y, SO_2 and SO_4 observations generally preclude the use of observations for development of a standard that is applicable nationally.

The PA considers a blending of observations and models to take advantage of their relative strengths; *e.g.,* combining the NADP wet deposition observations, modeled dry deposition, and a mix of modeled and observed concentrations, using the model for those species not measured or measured with very sparse spatial coverage. A potential disadvantage of mixing and matching observations and model estimates is to lose consistency afforded by using just modeling alone. A modeling platform like CMAQ is based on adhering to consistent treatment of mass conservation, by linking emission inputs with air concentrations and concentrations to deposition. Inconsistencies from combining processes from different analytical platforms increase the chance that mass (of nitrogen or sulfur) would unintentionally be increased or decreased as the internal checking that assures mass conservation is lost. Transference ratios incorporate a broad suite of atmospheric processes and consequently an analytical approach that instills consistency in the linkage of these processes is preferable to an approach lacking such inherent consistency. This contention does not mean that observations alone, if available, could not be used, but suggests that the inconsistencies in combining models and observations for the purposes of developing transference ratios has the potential for creating unintended artifacts.

While there is a reasonable conceptual basis for the concept of an aggregated deposition velocity referred to in the PA as a transference ratio, there is very limited ability to compare observed and calculated ratios. This is because the deposition velocity is dependent on individual species, and the mass transfer processes of wet and dry removal, while conceptually similar, are different. Consequently, there does not exist a meaningful approach to measure such an aggregated or lumped parameter. Therefore, at this time, the evaluation of transference ratios is based on sensitivity studies, analysis of variability, and comparisons with other models, as described in Appendix F of the PA.

As discussed in Appendix F, the interannual variability, as well as the sensitivity to emission changes of roughly 50 percent, results in changes of transference ratios of approximately 5 to 10 percent. Part of the reason for this inherent stability is due to the co-dependence of concentration and deposition. For example, as concentrations are reduced as a result of emissions reductions, deposition in turn

is reduced since deposition is a direct linear function of concentration leading to negligible impact on the deposition-to-concentration ratio. Likewise, an overestimate of concentration likely does not induce a bias in the transference ratio. While it is important to continue to improve the model's ability to match ambient concentrations in time and space, the bias of a modeled estimate of concentration relative to observations does not necessarily result in a bias in a calculated transference ratio. In effect, this consideration of bias cancellation reduces the sensitivity of transference ratios to model uncertainties and affords increased confidence in the stability of these ratios. Based on the series of sensitivity and variability analyses, the PA concludes that the transference ratios are relatively stable and provide a sound metric for linking deposition and concentration.

As discussed in the PA, transference ratios are dependent on the platform upon which they are constructed. Comparisons of transference ratios constructed from different modeling platforms do exhibit significant differences. While this divergence of results may be explained by a variety of differences in process treatments, input fields and incommensurabilities in species definitions and spatial configurations, it does suggest two very important conclusions. First, the idea of using multiple platforms for different parts of the country may be problematic as there does not exist a reliable approach to judge acceptance which is almost always based on comparisons to observations. Second, since transference ratios are based on concentrations and deposition, as the uncertainties in each of those components are reduced, the relative uncertainty in the ratios also is reduced. This means that basic improvements in the model's ability to reproduce observed wet deposition and ambient concentration fields enhance the relative confidence in the constructed transference ratios. Similarly, as in-situ dry deposition flux measurements become available that enable a more rigorous evaluation and diagnosis of modeled dry deposition processes, the expected improved treatment of dry deposition also would increase confidence in transference ratios. Finally, deposition is directly related to ambient air concentrations. Models like CMAQ rely on the concentration-to-deposition linkage to calculate deposition, which is the foundation for broadly based and robust assessments addressing atmospheric deposition. In principle, the use of a modeled constructed transference ratio is based on the same premise by which we use models to estimate deposition in the first place.

The shortage of widely available ambient air observations and the fact that estimates of dry deposition requires modeling, collectively suggests that a unified modeling platform is the best approach for constructing transference ratios. The PA (U.S. EPA, 2011, section 2) considers CMAQ and other models, such as CAMx and Canada's AURAMS—A Unified Regional Air-quality Modeling System (Smythe et al., 2008), and concludes that CMAQ is the preferred modeling platform for constructing transference ratios. This conclusion reflects the view that for the purposes of defining transference ratios, a modeling platform should: (1) Be a multiple pollutant model recognizing the myriad of connections across pollutant categories that directly and indirectly impact nitrogen and sulfur characterization, (2) include the most comprehensive scientific treatments of atmospheric processes that relate directly and indirectly to characterizing concentrations and deposition, (3) have an infrastructure capability that accommodates the inclusion of improved scientific treatments of relevant processes and important input fields, and (4) undergo frequent reviews regarding the adequacy of the underlying science as well as the appropriateness in applications. The CMAQ platform exhibits all these characteristics. It has been (and continues to be) extensively evaluated for several pollutant categories, and is supported by a central infrastructure of EPA scientists, whose mission is to improve and evaluate the CMAQ platform. More directly, CMAQ, and its predecessor versions, has a long track record going back to the NAPAP in the 1980s of specific improvements in deposition processes, which are described in Appendix F of the PA.

4. Aquatic Acidification Index

Having established the various expressions that link atmospheric deposition of nitrogen and sulfur to ANC and the transference ratios that translate atmospheric concentrations to deposition of nitrogen and sulfur, the PA derived the following expression of these linkages, which separates reduced forms of nitrogen, NH_X, from oxidized forms:

$$ANCcalc = \{ANClim + CL_r/Q_r\} - NHx/Q_r - T_{NOy}[NOy]/Q_r - T_{SOx}[SOx]/Q_r \qquad \text{(III-3)}$$

Equation III–3 is the basic expression of the form of a standard that translates the conceptual framework into an explicit expression that defines ANC as a function of the ambient air indicators, NO_Y and SO_X reduced nitrogen deposition,[9] and the critical load necessary to achieve a target ANC level. This equation calculates an expected ANC value based on ambient concentrations of NO_Y and SO_X. The calculated ANC will differ from the target ANC (ANClim) depending on how much the nitrogen and sulfur deposition associated with NO_Y, SO_X, and NH_X differs from the critical load associated with just achieving the target ANC.

Based on equation III–3, the PA defines an AAI that is more simply stated using terms that highlight the ambient air indicators:

$$AAI = F1 - F2 - F3[NOy] - F4[SOx] \qquad \text{(III- 4)}$$

where the AAI represents the long term (or steady state) ANC level associated with ambient air concentrations of NO_Y and SO_X. The factors F1 through F4 convey three attributes: a relative measure of the ecosystem's ability to neutralize acids (F1), the acidifying potential of reduced nitrogen deposition (F2), and the deposition-to-concentration translators for NO_Y (F3) and SO_X (F4).

Specifically:

F1 = ANClim + CL_r/Q_r;

[9] Because NHx is characterized directly as deposition, not as an ambient concentration in this equation, no transference ratio is needed for this term.

F2 = NHx/Q_r = NHx deposition divided by Q_r;

F3 = T_{NOy}/ Q_r; T_{NOy} is the transference ratio that converts ambient air concentrations of NOy to deposition of NOy; and

F4 = T_{SOx}/ Q_r; T_{SOx} is the transference ratio that converts ambient air concentrations of SO_X to deposition of SO_X.

All of these factors include representative Q_r to maintain unit (and mass) consistency between the AAI and the terms on the right side of equation III–4.

The F1 factor is the target ANC level plus the amount of deposition (critical load) the ecosystem can receive and still achieve the target level. It incorporates an ecosystem's ability to generate acid neutralizing capacity through base cation supply *([BC]*$_0$)* and to neutralize acidifying nitrogen deposition through *Neco,* both of which are incorporated in the CL term. As noted above, because *Neco* can only neutralize nitrogen deposition (oxidized or reduced) there may be rare cases where *Neco* exceeds the combination of reduced and oxidized nitrogen deposition. Consequently, to ensure that the AAI equation is applicable in all cases that may occur, equation III–4 is conditional on total nitrogen deposition, {NH_X + F3[NOy]}, being greater than *Neco.* In rare cases where *Neco* is greater than {NH_X + F3[NOy]}, F2, F3, and Neco would be set equal to 0 in the AAI equation. The consequence of setting F2 and F3 to zero is simply to constrain the AAI calculation just to SO_x, as nitrogen would have no bearing on acidifying contributions in this case.

The PA concludes that equation III–4 (U.S. EPA, 2011,equation 7–12), which defines the AAI, is ecologically relevant and appropriate for use as the form of a national standard designed to provide protection for aquatic ecosystems from the effects of acidifying deposition associated with concentrations of oxides of nitrogen and sulfur in the ambient air. This AAI equation does not, however, in itself, define the spatial areas over which the terms of the equation would apply. To specify values for factors F1 through F4, it is necessary to define spatial areas over which these factors are determined. Thus, it is necessary to identify an approach for spatially aggregating water bodies into ecologically meaningful regions across the U.S., as discussed below.

5. Spatial Aggregation

As discussed in the PA, one of the unique aspects of this form is the need to consider the spatial areas over which values for the F factors in the AAI equation are quantified. Ecosystems across the U.S. exhibit a wide range of geological, hydrological and vegetation characteristics that influence greatly the ecosystem parameters, *Q, BC_0^- ** and *Neco* that are incorporated in the AAI. Variations in ecosystem attributes naturally lead to wide variability in the sensitivities of water bodies in the U.S. to acidification, as well as in the responsiveness of water bodies to changes in acidifying deposition. Consequently, variations in ecosystem sensitivity, and the uncertainties inherent in characterizing these variations, must be taken into account in developing a national standard. In developing a secondary NAAQS to protect public welfare, the focus of the PA is on protecting sensitive populations of water bodies, not on each individual water body, which is consistent with the Agency's approach to protecting public health through primary NAAQS that focus on susceptible populations, not on each individual.

The approach used for defining ecologically relevant regions across the U.S. in the PA (U.S. EPA, 2011, section 7.2.5) is described below, along with approaches to characterizing each region as acid sensitive or relatively non-acid sensitive. This characterization facilitates a more detailed analysis and focus on those regions that are relatively more acid sensitive. This characterization is also used to avoid over-protection in relatively non-acid sensitive regions, regions that would receive limited benefit from reductions in the deposition of oxides of nitrogen and sulfur with respect to aquatic acidification effects. Approaches to developing representative values for each of the terms in the AAI equation (factors F1 through F4) for each ecologically relevant region for which sufficient data are available are then discussed. These spatial aggregation approaches are generally applicable to the contiguous U.S. The following discussion also addresses the development of factors for data-limited regions and specifically for Hawaii, Alaska and the U.S. territories.

Stated more simply, this section discusses appropriate ways to divide the country into ecologically relevant regions; to characterize each region as either acid sensitive or relatively non-acid sensitive; and to determine values of factors F1 through F4 for each region, taking into consideration the acid sensitivity of each region and the availability of relevant data. For each such region, the AAI would be calculated based on the values of factors F1 through F4 specified for that region.

In considering approaches to spatial aggregation, the PA focuses on methods that have been developed to define ecologically relevant regions, referred to as ecoregions, which are meaningfully related to the factors that are relevant to aquatic acidification. As noted above, the PA did not focus on looking at each individual water body, nor did it focus on aggregating over the entire nation, which would preclude taking into account the inherent variability in atmospheric and ecological factors that fundamentally modify the relationships that are central to the development of an ecologically relevant AAI.

Based on considering available classification schemes, the PA concludes that Omernik's ecoregion classification (as described at *http://www.epa.gov/wed/pages/ecoregions*) is the most appropriate method to consider for the purposes of this review. This classification offers several levels of spatial delineation, has undergone an extensive scientific peer review process, and has explicitly been applied to delineating acid sensitive areas within the U.S. Further, the PA concludes that ecoregion level III (Figure III–1) resolution, with 84 defined ecoregions in the contiguous U.S.,[10] is the most appropriate level to consider for this purpose. The spatial resolution afforded by level III strikes an appropriate balance relative to the reasoning that supports conclusions on indicators, as discussed above. The PA concludes that the most detailed level of resolution (level IV) is not appropriate given the limited data availability to address nearly 1,000 subdivisons within that level and the currently evolving nature of level IV regions. Further, level III ecoregions are preferred to level II in that level III ecoregions, but not level II ecoregions, are largely contiguous in space which allows for a more coherent development of information to quantify the AAI factors and to characterize the concentrations of NOy and SOx in the ambient air within each ecoregion.

Appendix C of the PA includes a description of each level III ecoregion. The PA notes that the use of ecoregions is an appropriate spatial aggregation scheme for an AAI-based standard focused on deposition-related aquatic acidification effects, while many of the same ecoregion attributes may be applicable in subsequent NAAQS reviews that may address other deposition-related aquatic and terrestrial ecological effects. Because atmospheric deposition is modified by ecosystem attributes, the types of vegetation, soils, bedrock geology, and

[10] We note that an 85th area within Omernik's Ecoregion Level III is currently being developed for California.

topographic features that are the basis of this ecoregion classification approach also will likely be key attributes for other deposition-related effects (*e.g.,* terrestrial acidification, nutrient enrichment) that link atmospheric concentrations to an aquatic or terrestrial ecological indicator.

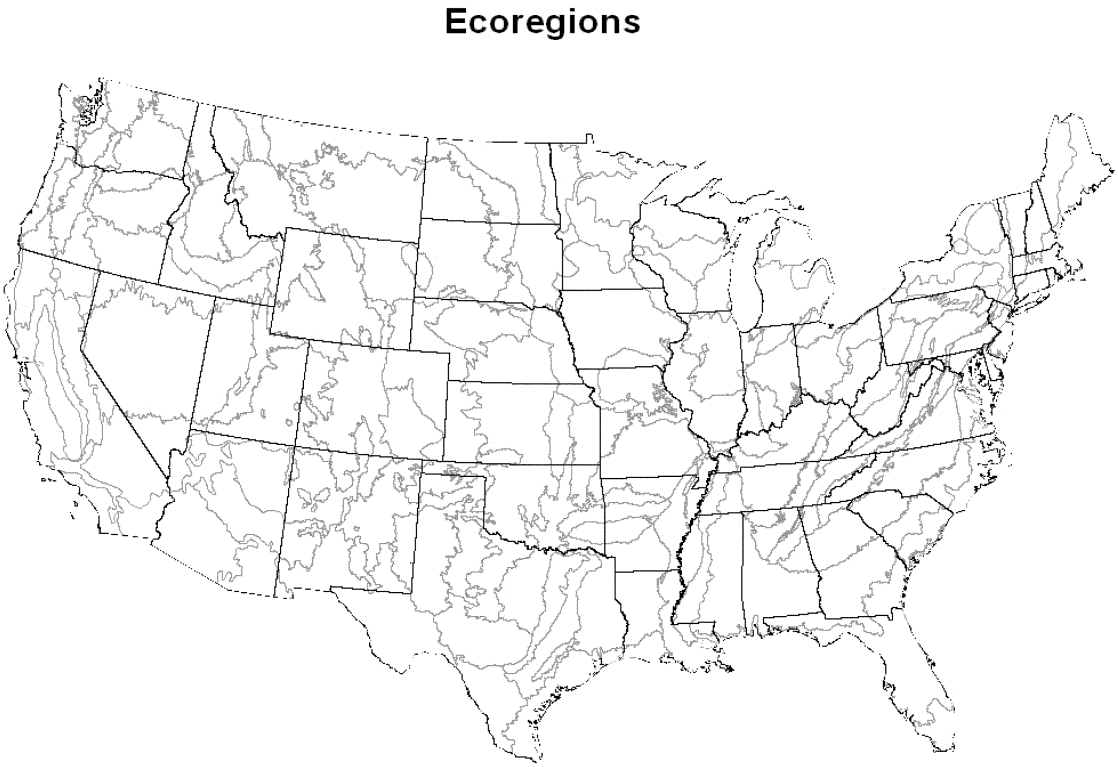

Figure III-1. Omernik Ecoregion III areas (http://www.epa.gov/wed/pages/ecoregions).

a. Ecoregion Sensitivity

The PA used Omernik's original alkalinity data (U.S. EPA, 2011, section 2) and more recent ANC data to delineate two broad groupings of ecoregions: Acid-sensitive and relatively non-acid sensitive ecoregions. This delineation was made to facilitate greater focus on those ecoregions with water bodies that generally have greater acid sensitivity and to avoid over-protection in regions with generally less sensitive water bodies. The approach used to delineate acid-sensitive and relatively non-acid sensitive regions included an initial numerical-based sorting scheme using ANC data, which categorized ecoregions with relatively high ANC values as being relatively non-acid sensitive. This initial delineation resulted in 29 of the 84 Omernik ecoregions being categorized as acid sensitive. Subsequently, land use data were also considered to determine to what extent an ecoregion is of a relatively pristine and rural nature by quantifying the degree to which active management practices related to development and agriculture occur in each ecoregion.

The overall objective is to produce a logical and practical grouping of ecoregions that experience adverse conditions with respect to aquatic acidification and are likely to respond to changes in concentrations of NO_y and SO_x in the ambient air and to the related deposition levels. To achieve this goal, a two-step process has been applied, first identifying acid sensitive ecoregions based on water quality data alone, and second identifying among those acid-sensitive ecoregions those with highly developed and managed areas. These highly developed and managed ecoregions are placed in a non-acid sensitive category to avoid over protection beyond what is requisite to protect public welfare. More specifically, in determining an ecoregion's acid sensitivity status in step 1, ANC data across the 84 ecoregions are sorted (U.S. EPA, 2011, section 7) to determine the number of water bodies within a region with ANC values suggestive of acid sensitivity, so as to screen out regions with an overabundance of high ANC values. In reviewing the ANC data, the PA identified 29 ecoregions that meet two criteria: (1) Greater than 5 percent of water bodies with data with ANC values less than 200 μeq/L and (2) greater than 1 percent of water bodies with ANC values less than 100 μeq/L. In step 2, land use data were used to identify those acid sensitive ecoregions with significant managed areas that would not be considered as having a relatively pristine and rural character. The percentage of the combination of developed (residential, transportation, industrial and commercial) and agricultural (croplands, pastures, orchards, vineyards) land use was used as an indicator of managed land use area. Forest cover was used as an indicator of non-managed land use more directly reflecting the pristine quality of a region. Based on the 2006 National Land Cover Data base (NLCD, *http://www.epa.gov/mrlc/nlcd-2006.html*), acid sensitive ecoregions would meet both of the following land use data

criteria: Percent of developed and agricultural area less than 20 percent combined with forested area greater than 50 percent. The combination of steps 1 and 2 identify 22 relatively acid sensitive areas (Table III–1 and Figure III–2).

Consideration was also given to the use of naturally acidic conditions in defining relatively non-acid sensitive areas. For example, several of the ecoregions located in plains near the coast exhibit elevated dissolved organic carbon (DOC) levels, which is associated with naturally acidic conditions. The DOC in surface waters is derived from a variety of weak organic acid compounds generated from the natural availability and decomposition of organic matter from biota. Consequently, high DOC is associated with ''natural'' acidity, with the implication that a standard intended to protect against atmospheric contributions to acidity is not an area of focus. The evidence suggests that several of the more highly managed ecoregions in coastal or near coastal transition zones are associated with relatively high DOC values, typically exceeding on average 5 mg/l, compared to other acid sensitive areas. Although there is sound logic to interpret naturally acidic areas as relatively non-acid sensitive, natural acidity indicators were not explicitly included in defining relatively non-acid sensitive areas as there does not exist a consensus-based quantifiable scientific definition of natural acidity. Approaches to explicitly define natural acidity likely will be pursued in future reviews of the standard.

TABLE III–1—LIST OF 22 ACID-SENSITIVE AREAS

Ecoregion name	Ecoregion No.
Ridge and Valley	8.4.1
Northern Appalachian Plateau and Uplands	8.1.3
Piedmont	8.3.4

TABLE III–1—LIST OF 22 ACID-SENSITIVE AREAS—Continued

Ecoregion name	Ecoregion No.
Western Allegheny Plateau	8.4.3
Southwestern Appalachians	8.4.9
Boston Mountains	8.4.6
Blue Ridge	8.4.4
Ouachita Mountains	8.4.8
Central Appalachians	8.4.2
Northern Lakes and Forests	5.2.1
Maine/New Brunswick Plains and Hills	8.1.8
North Central Appalachians	5.3.3
Northern Appalachian and Atlantic Maritime Highlands	5.3.1
Columbia Mountains/Northern Rockies	6.2.3
Middle Rockies	6.2.10
Wasatch and Uinta Mountains	6.2.13
North Cascades	6.2.5
Cascades	6.2.7
Southern Rockies	6.2.14
Sierra Nevada	6.2.12
Idaho Batholith	6.2.15
Canadian Rockies	6.2.4

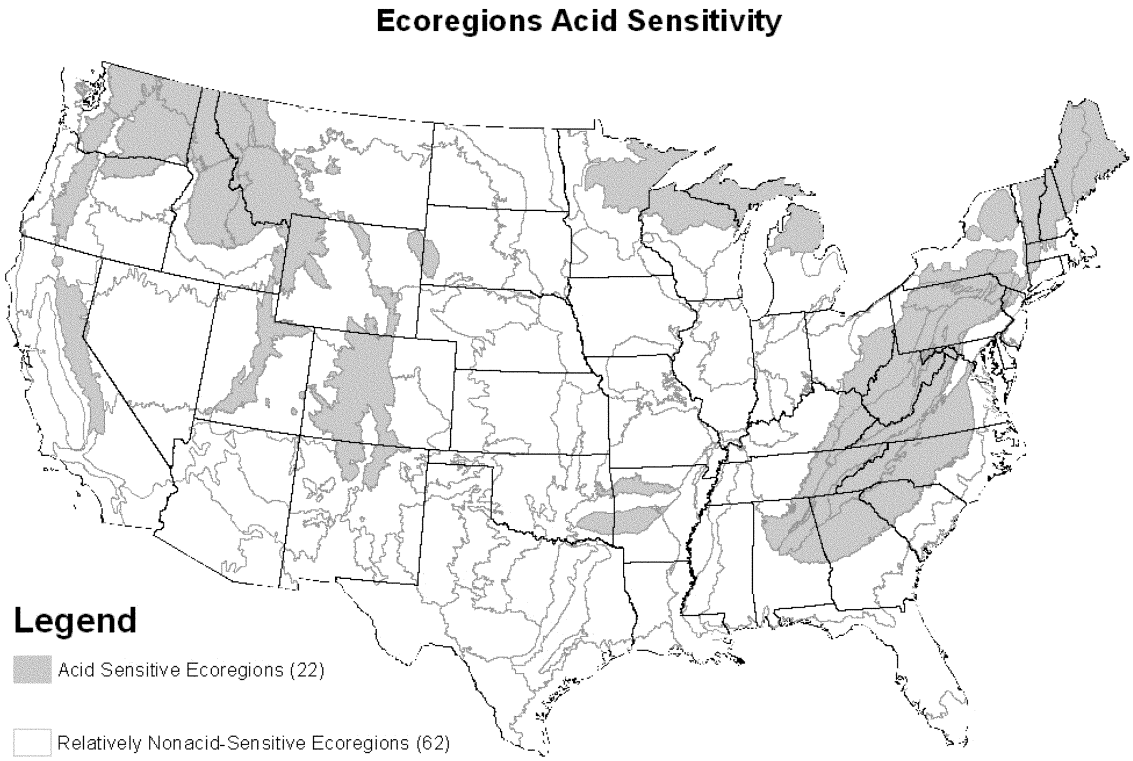

Figure III-2. Acid-sensitive ecoregions identified in grey fill (22 out of 84 ecoregions).

b. Representative Ecoregion-Specific Factors

Having concluded that the Omernik level III ecoregions are an appropriate approach to spatial aggregation for the purpose of a standard to address deposition-related aquatic acidification effects, the PA uses those ecoregions to define each of the factors in the AAI equation. As discussed below, factors F1 through F4 in equation III–4 are defined for each ecoregion by specifying ecoregion-specific values for each factor based on monitored or modeled data that are representative of each ecoregion.

i. Factor F1

As discussed above, factor F1 reflects a relative measure of an ecosystem's ability to neutralize acidifying deposition, and is defined as: F1 = ANClim + CL_r/Q_r. The value of F1 for each ecoregion would be based on a representative critical load for the ecoregion (CL_r) associated with a single national target ANC level (ANClim, discussed below in section III.D), as well as on a representative runoff rate (Q_r). To specify ecoregion-specific values for the term Q_r, the PA used the median value of the distribution of Q values that are available for water bodies within each ecoregion. To specify ecoregion-specific representative values for the term CL_r in factor F1, a distribution [11] of calculated critical loads was created for the water bodies in each ecoregion for which sufficient water quality and hydrology data are available.[12] The representative critical load was then defined to be a specific percentile of the distribution of critical loads in the ecoregion. Thus, for example, using the 90th percentile means that within an ecoregion, 90 percent of the water bodies would be expected to have higher calculated critical loads than the representative critical load. That is, if the representative critical load were to occur across the ecoregion, 90 percent of the water bodies would be expected to achieve the national ANC target or better.

The specific percentile selected as part of the definition of F1 is an important parameter that directly impacts the representative critical load specified for each ecoregion, and therefore the degree of protectiveness of the standard. A higher percentile corresponds to a lower critical load and, therefore, to lower allowable ambient air concentrations of NO_y and SO_x and related deposition to achieve a target AAI level. In conjunction with the other terms in the AAI equation, alternative forms can be appropriately characterized in part by identifying a range of alternative percentiles. The choice of an appropriate range of percentiles to consider for acid-sensitive and relatively non-acid sensitive ecoregions, respectively, is discussed below.

a. Acid-Sensitive Ecoregions

In identifying percentiles that are appropriate to consider for the purpose of calculating factor F1 for ecoregions characterized as acid sensitive, the PA concludes that it is appropriate to focus on the lower (more sensitive) part of the distribution of critical loads, so as to ensure that the ecoregion would be represented by relatively more acid sensitive water bodies within the ecoregion. Specifying factor F1 in this way would help to define a standard that would be protective of the population of acid sensitive water bodies within an ecoregion, recognizing that even ecoregions characterized as acid sensitive may contain a number of individual water bodies that are not acid sensitive. The PA recognizes that there is no basis for independently evaluating the degree of protectiveness afforded by any specific percentile value, since it is the combination of form and level, in conjunction with the indicator and averaging time, which determine the degree of protectiveness of a standard. In light of this, the PA concludes that it is appropriate to consider a range of percentiles, from well above the 50th percentile, or median, of the distribution to somewhat below the highest value (in terms of sensitivity; a high degree of sensitivity corresponds to a low value for critical load). More specifically, the PA concludes it is appropriate to consider percentiles in the range of the 70th to the 90th percentile (of sensitivity). This conclusion is based on the judgment that it would not be appropriate to represent an ecoregion with the lowest or near lowest critical load, so as to avoid potential extreme outliers that can be seen to exist at the extreme end of the data distributions, which would not be representative of the population of acid sensitive water bodies within the ecoregion and could lead to an overly protective standard. At the same time, in considering ecoregions that are inherently acid sensitive, it is judged to be appropriate to limit the lower end of the range for consideration to the 70th percentile, a value well above the median of the distribution, so that a substantial majority of acid-sensitive water bodies are protected.

In considering this conclusion, the CASAC Panel noted that the data bases for calculating critical loads within an ecoregion are not necessarily representative of all water bodies within an ecoregion. That is, in many ecoregions the lake sampling design used in studies that generated the relevant data may have focused on the relatively more sensitive water bodies within an ecoregion (Russell and Samet, 2011a). Consequently, a given percentile of the distribution of calculated critical loads, based on sampled water bodies, may not be representative of that percentile of all water bodies across an entire ecoregion. To the extent that the sampling of water bodies within an ecoregion was skewed toward the relatively more sensitive water bodies, selecting a given percentile from the distribution of available critical loads would result in a somewhat higher percentile of all water bodies within that ecoregion having a higher calculated critical load than the representative critical load value. Thus, the extent to which study sampling designs have resulted in skewed distributions of calculated critical loads is an uncertainty that is appropriate to consider in selecting a percentile for the purpose of defining the factor F1 in the AAI equation.

b. Non-Acid Sensitive Ecoregions

With regard to identifying percentiles that are appropriate to consider for the purpose of calculating factor F1 for ecoregions characterized as relatively non-acid sensitive, the PA recognizes that while such ecoregions are generally less sensitive to acidifying deposition from oxides of nitrogen and sulfur, they may contain a number of water bodies that are acid sensitive. This category includes ecoregions that are well protected from acidification effects due to natural production of base cations and high ANC levels, as well as naturally acidic systems with limited base cation production and consequently very low critical loads. Therefore, the use of a critical load that would be associated with a highly sensitive water body in a naturally acidic system would impose a high degree of relative protection in terms of allowable ambient air concentrations of oxides of nitrogen and sulfur and

[11] The distribution of critical loads was based on CL values calculated with Neco at the lake level. Consideration could also be given to using a distribution of CLs without Neco and adding the ecoregion average Neco value to the nth percentile critical load. This would avoid cases where the lake-level Neco value potentially could be greater than total nitrogen deposition. The CL at the lake level represents the CL for the lake to achieve the specified national target ANC value.

[12] The PA judged the data to be sufficient for this purpose if data are available from more than 10 water bodies in an ecoregion.

related deposition, while potentially affording little or no public welfare benefit from attempting to improve a naturally acidic system.

Based on these considerations, the PA concludes it is appropriate to consider the use of a range of percentiles that extends lower than the range identified above for acid-sensitive ecoregions. Consideration of a lower percentile would avoid representing a relatively non-acid sensitive ecoregion by a critical load associated with relatively more acid-sensitive water bodies. In particular, the PA concludes it is appropriate to focus on the median or 50th percentile of the distribution of critical loads so as to avoid over-protection in such ecoregions. Recognizing that relatively non-acid sensitive ecoregions generally are not sampled to the extent that acid-sensitive ecoregions are, it also is appropriate to consider using the median critical load of all relatively non-acid sensitive ecoregions for each such ecoregion.

ii. Factor F2

As discussed above, factor F2 is the amount of reduced nitrogen deposition within an ecoregion, including the deposition of both ammonia gas and ammonium ion, and is defined as: F2 = NH_X/Q_r. The PA calculated the representative runoff rate, Q_r, using a similar approach as noted above for factor F1; *i.e.,* the median value of the distribution of Q values that are available for water bodies within each ecoregion. In the PA, 2005 CMAQ model simulations over 12-km grids are used to calculate an average value of NH_X for each ecoregion. The NH_X term is based on annual average model outputs for each grid cell, which are spatially averaged across all the grid cells contained in each ecoregion to calculate a representative annual average value for each ecoregion. The PA concludes that this approach of using spatially averaged values is appropriate for modeling, largely due to the relatively rapid mixing of air masses that typically results in relatively homogeneous air quality patterns for regionally dispersed pollutants. In addition, there is greater confidence in using spatially averaged modeled atmospheric fields than in using modeled point-specific fields.

This averaging approach is also used for the air concentration and deposition terms in factors F3 and F4, as discussed below. The PA notes that modeled NH_X deposition exhibits greater spatial variability than the other modeled terms in factors F3 and F4. Recognizing this greater variability, the PA concludes that it would be appropriate to consider alternative approaches to specifying the value of NH_X. One such approach might involve the use of more localized and/or contemporaneous modeling in areas where this term is likely to be particularly variable and important.

iii. Factors F3 and F4

As discussed above, factors F3 and F4 are the ratios that relate ambient air concentrations of NO_y and SO_X to the associated deposition, and are defined as follow: F3 = T_{NOy}/Q_r and F4 = T_{SOx}/Q_r. T_{NOy} is the transference ratio that converts ambient air concentrations of NO_y to deposition of NO_y and T_{SOx} is the transference ratio that converts ambient air concentrations of SO_X to deposition of SO_X. The representative runoff rate, Q_r, is calculated as for factors F1 and F2. The transference ratios are based on the 2005 CMAQ simulations, using average values for each ecoregion, as noted above for factor F2. More specifically, the transference ratios are calculated as the annual deposition of NO_y or SO_X spatially averaged across the ecoregion and divided by the annual ambient air concentration of NO_y or SO_X, respectively, spatially averaged across the ecoregion.

c. Factors in Data-Limited Ecoregions

As discussed above in section III.B.5.a, in the PA the initial delineation of acid-sensitive and relatively non-acid sensitive ecoregions was based on available ANC and alkalinity data. Areas not meeting the ANC criteria described above are categorized as relatively non-acid sensitive. The development of a reasonable distribution of critical loads for water bodies within an ecoregion for the purpose of identifying the representative critical load requires additional data, including more specific water quality data for major cations and anions. This means that the water bodies that can be used to develop a distribution of critical loads is generally a subset of those water bodies for which ANC data are available Consequently, there are certain ecoregions with sparse data that are not suitable for developing a distribution of critical loads.

As noted above, the PA judges that it is not appropriate to develop such distributions based on data from less than ten water bodies within an ecoregion. Twelve such ecoregions, which included only relatively non-acid sensitive ecoregions, were characterized as being data-limited. For these ecoregions, the PA considered alternative approaches to specifying values for the terms CL_r and Q_r for the purpose of determining values for each of the factors in the AAI equation. For these data-limited ecoregions, the PA judges that it is appropriate to use the median values of CL_r and Q_r from the distributions of these terms for all other relatively non-acid sensitive ecoregions, rather than attempting to use severely limited data to develop a value for these terms based solely on data from such an ecoregion. Further, consideration could be given to using a single national default value for all relatively non-acid sensitive ecoregions. The PA notes that this data limitation is not a concern in specifying values for the other terms in the AAI equation for such ecoregions, since those terms are based on data from the 2005 CMAQ model simulation, which covers all ecoregions across the contiguous U.S.

d. Application to Hawaii, Alaska, and the U.S. Territories

The above methods for specifying ecoregion-specific values for the factors in the AAI equation apply to those ecoregions within the contiguous U.S. For areas outside the continental U.S., including Hawaii, Alaska, and the U.S. Territories, there is currently a lack of available data to characterize the sensitivity of such areas, as well as a lack of water body-specific data and CMAQ-type modeling to specify values for the F1 through F4 factors. Thus, the PA has considered possible alternative approaches to specifying values for factors F1 through F4 in the AAI equation for these areas.

One such approach could be to specify area-specific values for the factors based on values derived for ecoregions with similar acid sensitivities, to the extent that relevant information can be obtained to determine such similarities. Such an approach would involve conducting an analysis to characterize similarities in relevant ecological attributes between ecoregions in the contiguous U.S. and these areas outside the contiguous U.S. so as to determine the appropriateness of utilizing ecoregion-specific values for the CL_r and Q_r terms from one or more ecoregions within the contiguous U.S. This approach would also involve conducting additional air quality modeling for the areas that are outside the geographical scope of the currently available CMAQ model simulations, so as to develop the other information necessary to specify values for factors F2 through F4 for these areas.

A second approach could rely on future data collection efforts to establish relevant ecological data within these areas that, together with additional air quality modeling, could be used to specify area-specific values for factors

F1 through F4. Until such time as relevant data become available, these areas could be treated the same as data-limited ecoregions in the contiguous U.S. that are relatively non-acid sensitive.

The PA concludes that either approach would introduce substantial uncertainties that arise from attempting to extrapolate values based on similarity assumptions or arbitrarily assigning values for factors in the AAI equation that would be applicable to these areas outside the contiguous U.S. In light of such uncertainties, the PA concludes that it would also be appropriate to consider relying on the existing NO_2 and SO_2 secondary standards in these areas for protection of any potential direct or deposition-related ecological effects that may be associated with the presence of oxides of nitrogen and sulfur in the ambient air. The PA concludes that relying on existing secondary standards in these areas is preferable to using a highly uncertain approach to allow for the application of a new standard based on the AAI in the absence of relevant area-specific data.

6. Summary of the AAI Form

With regard to the form of a multi-pollutant air quality standard to address deposition-related aquatic acidification effects, the PA concludes that consideration should be given to an ecologically relevant form that characterizes the relationships between the ambient air indicators for oxides of nitrogen and sulfur, the related deposition of nitrogen and sulfur, and the associated aquatic acidification effects in terms of a relevant ecological indicator. Based on the available information and assessments, consideration should be given to using ANC as the most appropriate ecological indicator for this purpose, in that it provides the most stable metric that is highly associated with the water quality properties that are directly responsible for the principal adverse effects associated with aquatic acidification: Fish mortality and reduced aquatic species diversity.

The PA developed such a form, using a simple equation to calculate an AAI value in terms of the ambient air indicators of oxides and nitrogen and sulfur and the relevant ecological and atmospheric factors that modify the relationships between the ambient air indicators and ANC. Recognizing the spatial variability of such factors across the U.S., the PA concludes it is appropriate to divide the country into ecologically relevant regions, characterized as acid-sensitive or relatively non-acid-sensitive, and specify the value of each of the factors in the AAI equation for each such region. Omernik ecoregions, level III, are identified as the appropriate set of regions over which to define the AAI. There are 84 such ecoregions that cover the continental U.S. This set of ecoregions is based on grouping a variety of vegetation, geological, and hydrological attributes that are directly relevant to aquatic acidification assessments and that allow for a practical application of an aquatic acidification standard on a national scale.

The PA defines AAI by the following equation: $AAI = F1 - F2 - F3[NO_y] - F4[SO_X]$. Factors F1 through F4 would be defined for each ecoregion by specifying ecoregion-specific values for each factor based on monitored or modeled data that are representative of each ecoregion. The F1 factor is also defined by a target ANC value. More specifically:

(1) F1 reflects a relative measure of an ecosystem's ability to neutralize acidifying deposition. The value of F1 for each ecoregion would be based on a representative critical load for the ecoregion associated with a single national target ANC level, as well as on a representative runoff rate. The representative runoff rate, which is also used in specifying values for the other factors, would be the median value of the distributions of runoff rates within the ecoregion. The representative critical load would be derived from a distribution of critical loads calculated for each water body in the ecoregion for which sufficient water quality and hydrology data are available. The representative critical load would be defined by selecting a specific percentile of the distribution.

In identifying a range of percentiles that are appropriate to consider for this purpose, regions categorized as acid sensitive were considered separately from regions categorized as relatively non-acid sensitive. For acid sensitive regions, the PA concludes that consideration should be given to selecting a percentile from within the range of the 70th to the 90th percentile. The lower end of this range was selected to be appreciably above the median value so as to ensure that the critical load would be representative of the population of relatively more acid sensitive water bodies within the region, while the upper end was selected to avoid the use of a critical load from the extreme tail of the distribution which is subject to a high degree of variability and potential outliers. For relatively non-acid sensitive regions, the PA concludes that consideration should be given to selecting the 50th percentile to best represent the distribution of water bodies within such a region, or alternatively to using the median critical load of all relatively non-acid sensitive areas, recognizing that such areas are far less frequently evaluated than acid sensitive areas. Using either of these approaches would avoid characterizing a generally non-acid-sensitive region with a critical load that is representative of relatively acid sensitive water bodies that may exist within a generally non-acid sensitive region.

(2) F2 reflects the deposition of reduced nitrogen. Consideration should be given to specifying the value of F2 for each region based on the averaged modeled value across the region, using national CMAQ modeling that has been conducted by EPA. Consideration could also be given to alternative approaches to specifying this value, such as the use of more localized and/or contemporaneous modeling in areas where this term is likely to be particularly variable and important.

(3) F3 and F4 reflect transference ratios that convert ambient air concentrations of NO_y and SO_X, respectively, into related deposition of nitrogen and sulfur. Consideration should be given to specifying the values for F3 and F4 for each region based on CMAQ modeling results averaged across the region. We conclude that specifying the values or the transference ratios based on CMAQ modeling results alone is preferred to an alternative approach that combines CMAQ model estimates with observational data.

(4) The terms $[NO_y]$ and $[SO_X]$ reflect ambient air concentrations measured at monitoring sites within each region.

Using the equation, a value of AAI can be calculated for any measured values of ambient NO_y and SO_X. For such a NAAQS, the Administrator would set a single, national value for the level of the AAI used to determine achievement of the NAAQS, as discussed below in section III.D. The ecoregion-specific values for factors F1 through F4 would be specified by EPA based on the most recent data and CMAQ model simulations, and codified as part of such a standard. These factors would be reviewed and updated as appropriate in the context of each periodic review of the NAAQS.

The PA developed specific F factors for each ecoregion based on the approach discussed above, using alternative percentiles and alternative national target ANC levels. The results of this analysis for ecoregions characterized as acid sensitive are presented in Table 7–1a–d in the PA.

C. Averaging Time

As discussed in section 7.3 of the PA, aquatic acidification can occur over both long- and short-term timescales. Long-term cumulative deposition of nitrogen and sulfur is reflected in the chronic acid-base balance of surface waters as indicated by measured annual ANC levels. Similarly, the use of steady state critical load modeling, which generates critical loads in terms of annual cumulative deposition of nitrogen and sulfur, means that the focus of ecological effects studies based on critical loads is on the long-term equilibrium status of water quality in aquatic ecosystems. Much of the evidence of adverse ecological effects associated with aquatic acidification, as discussed above in section II.A, is associated with chronically low ANC levels. Protection against a chronic ANC level that is too low is provided by reducing overall annual average deposition levels for nitrogen and sulfur.

Reflecting this focus on long-term acidifying deposition, the PA developed the AAI that links ambient air indicators to deposition-related ecological effects, in terms of several factors, F1 through F4. As discussed above, these factors are all calculated as annual average values, whether based on water quality and hydrology data or on CMAQ model simulations. In the context of a standard defined in terms of the AAI, the PA concludes that it is appropriate to consider the same annual averaging time for the ambient air indicators as is used for the factors in the AAI equation.

We also recognize that short-term (*i.e.,* hours or days) episodic changes in water chemistry, often due to changes in the hydrologic flow paths, can have important biological effects in aquatic ecosystems. Such short-term changes in water chemistry are termed ''episodic acidification.'' Some streams may have chronic or base flow chemistry that is generally healthy for aquatic biota, but may be subject to occasional acidic episodes with potentially lethal consequences. Thus, short-term episodic ecological effects can occur even in the absence of long-term chronic acidification effects.

Episodic declines in pH and ANC are nearly ubiquitous in drainage waters throughout the eastern U.S. Episodic acidification can result from several mechanisms related to changes in hydrologic flow paths. For example, snow can store nitrogen deposited throughout the winter and snowmelt can then release this stored nitrogen, together with nitrogen derived from nitrification in the soil itself, in a pulse that leads to episodic acidification in the absence of increased deposition during the actual episodic acidification event. The PA notes that inputs of nitrogen and sulfur from snowpack and atmospheric deposition largely cycle through soil. As a result, short-term direct deposition inputs are not necessarily important in episodic acidification. Thus, as noted in chapter 3 of the ISA, protection against episodic acidity events can be achieved by establishing a higher chronic ANC level.

Taken together, the above considerations support the conclusion that it is appropriate to consider the use of a long-term average for the ambient air indicators NO_y and SO_X for an aquatic acidification standard defined in terms of the AAI. The use of an annual averaging time for NO_y and SO_X concentrations would be appropriate to provide protection against low chronic ANC levels, which in turn would protect against both long-term acidification and acute acidic episodes.

The PA has also considered interannual variability in both ambient air quality and in precipitation, which is directly related to the deposition of oxides of nitrogen and sulfur from the ambient air. While ambient air concentrations show year-to-year variability, often the year-to-year variability in precipitation is considerably greater, given the highly stochastic nature of precipitation. The use of multiple years over which annual averages are determined would dampen the effects of interannual variability in both air quality and precipitation. For the ambient air indicators, the use of multiple-year averages would also add stability to calculations used to judge whether an area meets a standard defined in terms of the AAI. Consequently, the PA concludes that an annual averaging time based on the average of each year over a consecutive 3- to 5-year period is appropriate to consider for the ambient air indicators NO_y and SO_X. In reaching this conclusion, the PA notes that in its comments on the second draft PA, CASAC agreed that a 3- to 5-year averaging time was appropriate to consider (Russell and Samet, 2010b).

D. Level

As discussed above, the PA concludes that ANC is the ecological indicator best suited to reflect the sensitivity of aquatic ecosystems to acidifying deposition from oxides of nitrogen and sulfur in the ambient air. The ANC is an indicator of the aquatic acidification expected to occur given the natural buffering capacity of an ecosystem and the loadings of nitrogen and sulfur resulting from atmospheric deposition. Thus, the PA developed a new standard for aquatic acidification that is based on the use of chronic ANC as the ecological indicator as a component in the AAI.

The level of the standard would be defined in terms of a single, national value of the AAI. The standard would be met at a monitoring site when the multi-year average of the calculated annual values of the AAI was equal to or *above* the specified level of the standard.[13] The annual values of the AAI would be calculated based on the AAI equation using the assigned ecoregion-specific values for factors F1 through F4 and monitored annual average NO_y and SO_X concentrations. Since the AAI equation is based on chronic ANC as the ecological indicator, the level chosen for the standard would reflect a target chronic ANC value. As noted above, the assigned F factors for each ecoregion would be determined by EPA in the rulemaking to set the NAAQS, based on water quality and hydrology data, CMAQ modeling, the selected percentile that is used to identify a representative critical load within the ecoregion, and the selected level of the standard. The combination of the form of the standard, discussed above in section III.B, defined by the AAI equation and the assigned values of the F factors in the equation, other elements of the standard including the ambient air indicators (section III.A) and their averaging time (section III.C), and the level of the standard determines the allowable levels of NO_y and SO_X in the ambient air within each ecoregion. All of the elements of the standard together determine the degree of protection from adverse aquatic acidification effects associated with oxides of nitrogen and sulfur in the ambient air. The level of the standard plays a central role in determining the degree of protection provided and is discussed below.

The PA focuses primarily on information that relates degrees of biological impairment associated with adverse ecological effects to aquatic ecosystems to alternative levels of ANC in reaching conclusions regarding the range of target ANC levels that is appropriate to consider for the level of the standard. The PA develops the rationale for identifying a range of target ANC levels that is appropriate to consider by addressing questions related to the following areas: (1) Associations between ANC and pH levels to provide an initial bounding for the range of ANC

[13] Unlike other NAAQS, where the standard is met when the relevant value is at or below the level of the standard since a lower standard level is more protective, in this case a higher standard level is more protective.

values to be considered; (2) evidence that allows for the delineation of specific ANC ranges associated with varying degrees of severity of biological impairment ecological effects; (3) the role of ANC in affording protection against episodic acidity; (4) implications of the time lag response of ANC to changes in deposition; (5) past and current examples of target ANC values applied in environmental management practices; and (6) data linking public welfare benefits and ANC.

1. Association Between pH Levels and Target ANC Levels

As discussed above in section II.A and more fully in chapter 3 of the PA, specific levels of ANC are associated with differing levels of risk of biological impairment in aquatic ecosystems, with higher levels of ANC resulting in lower risk of ecosystem impacts, and lower ANC levels resulting in risk of both higher intensity of impacts and a broader set of impacts. While ANC is not the causal agent determining biological effects in aquatic ecosystem, it is a useful metric for determining the level at which a water body is protected against risks of acidification. There is a direct correlation between ANC and pH levels which, along with dissolved aluminum, are more closely linked to the biological causes of ecosystem response to acidification.

Because there is a direct correlation between ANC and pH levels, the selection of target ANC levels is informed in part through information on effects of pH as well as direct studies of effects related to ANC. Levels of pH are closely associated with ANC in the pH range of approximately 4.5 to 7. Within this range, higher ANC levels are associated with higher pH levels. At a pH level of approximately 4.5, further reductions in ANC generally do not correlate with pH, as pH levels remain at approximately 4.5 while ANC values fall substantially. Similarly, at a pH value of approximately 7, ANC values can continue to increase with no corresponding increase in pH. As pH is the primary causal indicator of effects related to aquatic acidification, this suggests that ANC values below approximately −50 μeq/L (the apparent point in the relationship between pH and ANC where pH reaches a minimum) are not likely to result in further damage. In addition, ANC values around and above approximately 100 μeq/L (the apparent region in the relationship where pH reaches a maximum) are not likely to confer additional protection. As a result, the initial focus in the PA was on target ANC values in the range of −50 to 100 μeq/L.

2. ANC Levels Related to Effects on Aquatic Ecosystems

As discussed above in section II.A, the number of fish species present in a water body has been shown to be positively correlated with the ANC level in the water, with higher values supporting a greater richness and diversity of fish species. The diversity and distribution of phyto-zooplankton communities also are positively correlated with ANC.

A summary of effects related to ANC ranges is shown above in Table II–1. Within the ANC range from approximately −50 to 100 μeq/L, linear and sigmoidal relationships are observed between ANC and ecosystem effects. On average, fish species richness is lower by one fish species for every 21 μeq/L decrease in ANC in Shenandoah National Park streams (ISA, section 3.2.3.4). As shown in Table II–1, ANC levels have been grouped into five categories related to expected ecological effects, including categories of acute concern (<0 μeq/L), severe concern (0–20 μeq/L), elevated concern (20–50 μeq/L), moderate concern (50–100 μeq/L), and low concern (>100 μeq/L). This categorization is supported by a large body of research completed throughout the eastern U.S. (Sullivan et al., 2006).

Water bodies with ANC values less than or equal to 0 μeq/L at based flow are chronically acidic. Such ANC levels can lead to complete loss of species and major changes in the ability of water bodies to support diverse biota, especially in water bodies that are highly sensitive to episodic acidification. Based on the above considerations, the PA has focused on target ANC levels no lower than 0 μeq/L.

As discussed in the PA, biota generally are not harmed when ANC values are >100 μeq/L, due to the low probability that pH levels will be below 7. In the Adirondacks, the number of fish species also peaks at ANC values >100 μeq/L. This suggests that at ANC levels greater than 100 μeq/L, little risk from acidification exists in many aquatic ecosystems. At ANC levels below 100 μeq/L, overall health of aquatic communities can be maintained, although fish fitness and community diversity begin to decline. At ANC levels ranging from 100 down to 50 μeq/L, there is increasing likelihood that the fitness of sensitive species (*e.g.,* brook trout, zooplankton) will begin to decline. When ANC concentrations are below 50 μeq/L, the probability of acidification increases substantially, and negative effects on aquatic biota are observed, including large reductions in diversity of fish species and changes in the health of fish populations, affecting reproductive ability and fitness, especially in water bodies that are affected by episodic acidification. While there is evidence that ANC levels above 50 can confer additional protection from adverse ecological effects associated with aquatic acidification in some sensitive ecosystems, the expectation that such incremental protection from adverse effects will continue up to an ANC level of 100 is substantially reduced. The PA concludes that the above considerations support a focus on target ANC levels up to a level greater than 50 μeq/L but below 100 μeq/L, such as up to a level of 75 μeq/L.

In considering the available scientific evidence, as summarized here and discussed in more detail in the ISA and REA, in its review of the second draft PA, CASAC expressed the following views about the range of biological responses that corresponds to this range of ANC levels (*i.e.,* 0–100 μeq/L):

> There will likely be biological effects of acidification at higher ANC values within this range, and there are relatively insensitive organisms that are not impacted at ANC values at the low end of this range. Adverse effects of acidification on aquatic biota are fairly certain at the low end of this range of ANC and incremental benefits of shifting waters to higher ANC become more uncertain at higher ANC levels. There is substantial confidence that there are adverse effects at ANC levels below 20 μeq/L, and reasonable confidence that there are adverse effects below 50 μeq/L. Levels of 50 μeq/L and higher would provide additional protection, but the Panel has less confidence in the significance of the incremental benefits as the level increases above 50 μeq/L. (Russell and Samet, 2010b)

The PA concludes that the above considerations, including the views of CASAC, provide support for focusing on target ANC levels in the range of 20 to 75 μeq/L.

3. Consideration of Episodic Acidity

As discussed in the PA, across the broad range of ANC values from 0 to 100 μeq/L, ANC affords protection against the likelihood of decreased pH (and associated increases in Al) during long or short periods. In general, the higher the ANC within this range, the lower the probability of reaching low pH levels where direct effects such as increased fish mortality occur, as shown in Table 3–1 of the PA. Accordingly, greater protection would be achieved by target chronic ANC values set high enough to avoid pH depression to levels associated with elevated risk.

The specific relationship between ANC and the probability of reaching pH levels of elevated risk varies by water body and fish species. The ANC levels below 20 μeq/L are generally associated with high probability of low pH, leading to death or loss of fitness of biota that are sensitive to acidification (US EPA, 2008, section 5.2.2.1; US EPA, 2009, section 5.2.1.2). At these levels, during episodes of high acidifying deposition, brook trout populations may experience lethal effects. In addition, the diversity and distribution of zooplankton communities decline sharply at ANC levels below 20 μeq/L. Overall, there is little uncertainty that significant effects on aquatic biota are occurring at ANC levels below 20 μeq/L.

It is clear that at ANC levels approaching 0 μeq/L (Table II–1), there is significant impairment of sensitive aquatic ecosystems with almost complete loss of fish species. Avoiding ANC levels approaching 0 μeq/L is particularly relevant to episodic spikes in acidity that occur during periods of rapid snow melt and during and after major precipitation events. Since the ANC range considered in the PA reflects average, long-term base flow values, it is appropriate to consider protecting against episodic drops in ANC values to a level as low as 0 μeq/L. Staddard et al. (2003) noted on average a 30 μeq/L depression of ANC between spring and summer time values, indicating the need to maintain higher base flow ANC levels to protect against ANC levels below 0 μeq/L. The above considerations do not provide support for a target chronic ANC level as low as 0 μeq/L for a standard that would protect against significant harm to aquatic ecosystems, including harm from episodic acidification. The PA concludes that these considerations also support a lower end of the range for consideration no lower than 20 μeq/L.

The CASAC agreed with this conclusion in its comments on the second draft PA (Russell and Samet, 2010b). The CASAC noted that ''there are clear and marked biological effects at ANC values near 0 μeq/L, so this is probably not an appropriate target value'' for the AAI. With regard to the likelihood of impairment of aquatic ecosystems due to episodic acidification, in terms of specific target levels for chronic ANC, CASAC expressed the following view:

> Based on surface waters studied in the Northeast, decreases in ANC associated with snowmelt [are] approximately 50 μeq/L. Thus, based on these studies, a long term ANC target level of 75 μeq/L would generally guard against effects from episodic acidification down to a level of about 25 μeq/L. (Russell and Samet, 2010b)

4. Consideration of Ecosystem Response Time

The PA notes that when considering a standard level to protect against aquatic acidification, it is appropriate to take into account both the time period to recovery as well as the potential for recovery in acid-sensitive ecoregions. Ecosystems become adversely impacted by acidifying deposition over long periods of time and have variable time frames and abilities to recover from such perturbations. Modeling presented in the REA (U.S. EPA, 2009, section 4.2.4) shows the estimated ANC values for Adirondack lakes and Shenandoah streams under pre-acidification conditions and indicates that for a small percentage of lakes and streams, natural ANC levels would have been below 50 μeq/L. Therefore, for these water bodies, reductions in acidifying deposition are not likely to achieve an ANC of 50 μeq/L or greater. Conversely, for some lakes and streams the level of perturbation from long periods of acidifying deposition has resulted in very low ANC values compared to estimated natural conditions. For such water bodies, the time to recovery would be largely dependent on future inputs of acidifying deposition.

Setting a standard level in terms of a target chronic ANC level is based on the long-term response of aquatic ecosystems. The time required for a water body to achieve the target ANC level—given a decrease in ambient air concentrations of NO_y and SO_x and related acidifying deposition such that the critical load for a target ANC is not exceeded—is often decades if not centuries. In recognition of the potential public welfare benefits of achieving the target ANC in a shorter time frame, the concept of target loads had been developed. Target loads represent the depositional loading that is expected to achieve a particular level of the ecological indicator by a given time. For example, to achieve an ANC level of 20 μeq/L by 2030, it might be necessary to specify a higher target ANC level of, for example, 50 μeq/L, such that the depositional loading would be reduced more quickly than would occur if the depositional loading was based on achieving a target ANC level of 20 μeq/L as a long-term equilibrium level. In this example, the target ANC of 50 μeq/L would ultimately be realized many years later.

The above considerations have implications for selecting an appropriate standard level, in that the standard level affects not only the ultimate degree of protection that would be afforded by the standard, but also the time frame in which such protection would be realized. However, the PA recognizes that there is a great deal of heterogeneity in response times among water bodies and that there is only very limited information from dynamic modeling that would help to quantify recovery time frames in areas across the country. As a consequence, quantification of a general relationship between critical loads associated with a specific long-term target ANC level and target loads associated with achieving the target ANC level within a specific time frame is not currently possible. Thus, while the time frame for recovery is an important consideration in selecting an appropriate range of levels to consider, the PA concludes that it can only be considered in a qualitative sense at this time.

5. Prior Examples of Target ANC Levels

A number of regional organizations, states, and international organizations have developed critical load frameworks to protect against acidification of sensitive aquatic ecosystems. In considering the appropriate range of target ANC levels for consideration in this review, it is informative to evaluate the target ANC levels selected by these different organizations, as well as the rationale provided in support of the selected levels. Chapter 4 of the PA provides a detailed discussion of how critical loads have been developed and used in other contexts. Specific target values and their rationales are summarized below.

The UNECE has developed critical loads in support of international emissions reduction agreements. As noted in chapter 4 of the PA, critical loads were established to protect 95 percent of surface waters in Europe from an ANC less than 20 μeq/L based on protection of brown trout. Individual countries have set alternative ANC targets; for example, Norway targets an ANC of 30 μeq/L based on protection of Atlantic salmon. Several states have established target ANC or pH values related to protection of lakes and streams from acidification. While recognizing that some lakes in the Adirondacks will have a naturally low pH, the state of New York has established a target pH value of 6.5 for lakes that are not naturally below 6.5. As noted above, this level is associated with an ANC value that is likely to be between 20 and 50 μeq/L or possibly higher. New Hampshire and Vermont have set ANC targets of 60 μeq/L and 50 μeq/L, respectively. Tennessee has established site-specific target ANC

values based on assessments of natural acidity, with a default value of 50 μeq/L when specific data are not available.

Taken together, these policy responses to concerns about ecological effects associated with aquatic acidification indicate that target ANC values between 20 and 60 μeq/L have been selected by states and other nations to provide protection of lakes and streams in some of the more sensitive aquatic ecosystems.

6. Consideration of Public Welfare Benefits

The point at which effects on public welfare become adverse is not defined in the CAA. Characterizing a known or anticipated adverse effect to public welfare is an important component of developing any secondary NAAQS. According to the CAA, welfare effects include:

> * * * effects on soils, water, crops, vegetation, manmade materials, animals, wildlife, weather, visibility, and climate, damage to and deterioration of property, and hazards to transportation, as well as effect on economic values and on personal comfort and well-being, whether caused by transformation, conversion, or combination with other air pollutants. (CAA, section 302(h)).

Consideration of adversity to public welfare in the context of the secondary NAAQS for oxides of nitrogen and sulfur can be informed by information about losses in ecosystem services associated with acidifying deposition and the potential economic value of those losses, as summarized above in section II.C and discussed more fully in chapter 4 of the PA.

Ecosystem service losses at alternative ANC levels are difficult to enumerate. However, in general there are categories of ecosystem services, discussed in chapter 4 of the PA, that are related to the specific ecosystem damages expected to occur at alternative ANC levels. Losses in fish populations due to very low ANC (below 20 μeq/L) are likely associated with significant losses in value for recreational and subsistence fishers. Many acid sensitive lakes are located in areas with high levels of recreational fishing activity. For example, in the northeastern U.S., where nearly 8 percent of lakes are considered acidic, more than 9 percent of adults participate in freshwater fishing, with an estimated value of approximately $5 billion in 2006. This suggests that improvements in lake fish populations may be associated with significant recreational fishing value.

As discussed in the PA, inland surface waters also provide cultural services such as aesthetic and existence value and educational services. To the extent that piscivorous birds and other wildlife are harmed by the absence of fish in these waters, hunting and birdwatching activities are likely to be adversely affected. A case study of the value to New York residents of improving the health of lakes in the Adirondacks found significant willingness to pay for those improvements. When scaled to evaluate the improvement in lake health from achieving ANC values of either 20 or 50 μeq/L, the study implies benefits to the New York population roughly on the order of $300–900 million per year (in constant 2007$). The survey administered in this study recognized that participants were thinking about the full range of services provided by the lakes in question—not just the recreational fishing services. Therefore the estimates of willingness to pay include resident's benefits for potential hunting and birdwatching activities and other ancillary services. These results are just for New York populations. The PA concludes that if similar benefits exist for improvements in other acid sensitive lakes, the economic value to U.S. populations could be very substantial, suggesting that, at least by one measure of impact on public welfare, impacts associated with ANC less than 50 μeq/L may be adverse to public welfare.

7. Summary of Alternative Levels

Based on all the above considerations, the PA concludes that consideration should be given to a range of standard levels from 20 to 75 μeq/L. The available evidence indicates that target ANC levels below 20 μeq/L would be inadequate to protect against substantial ecological effects and potential catastrophic loss of ecosystem function in some sensitive aquatic ecosystems. While ecological effects occur at ANC levels below 50 μeq/L in some sensitive ecosystems, the degree and nature of those effects are less significant than at levels below 20 μeq/L. Levels at and above 50 μeq/L would be expected to provide additional protection, although uncertainties regarding the potential for additional protection from adverse ecological effects are much larger for target ANC levels above about 75 μeq/L, as effects are generally appreciably less sensitive to changes in ANC at such higher levels.

In reaching this conclusion in the PA, consideration was given to the extent to which a target ANC level within this range would protect against episodic as well as long-term ecological effects. Levels in the mid- to upper-part of this range would be expected to provide greater protection against short-term, episodic peaks in aquatic acidification, while lower levels within this range would give more weight to protection from long-term rather than episodic acidification. Similarly, levels in the mid- to upper-part of this range would be expected to result in shorter time periods for recovery given the lag in ecosystem response in some sensitive ecosystems relative to levels in the lower part of this range. The PA also notes that this range encompasses target ANC values that have been established by various States and regional and international organizations to protect against acidification of aquatic ecosystems.

The PA recognizes that the level of the standard together with the other elements of the standard, including the ambient air indicators, averaging time, and form, determine the overall protectiveness of the standard. Thus, consideration of a standard level should reflect the strengths and limitations of the evidence and assessments as well as the inherent uncertainties in the development of each of the elements of the standard. The implications of considering alternative standards, defined in terms of alternative combinations of levels and percentile values that are a critical component of factor F1 in the form of the standard, are discussed below in section III.E. Key uncertainties in the various components of the standard are summarized and considered below in section III.F.

E. Combined Alternative Levels and Forms

To provide some perspective on the implications of various alternative multi-pollutant, AAI-based standards, the PA presented the number of acid-sensitive ecoregions that would likely not meet various sets of alternative standards. The alternative standards considered were based on combinations of alternative target ANC levels, within the range of 20 to 75 μeq/L, and alternative forms, characterized by alternative representative percentiles within the range of the 70th to 90th percentile. These alternative standards are also defined in terms of the other elements of the standard: ambient air indicators NOy and SOx, discussed above in section III.A; other elements of the form of the standard, including ecoregion-specific values for factors F1 through F4 in the AAI equation, discussed above in section III.B.5; and an annual averaging time for NO_y and SO_x, discussed above in section III.C. With regard to the averaging time, the assessment did not consider multi-year averaging of the calculated annual AAI

values due to data limitations, including, for example, the lack of CMAQ modeling for multiple consecutive years. In this assessment, we characterize an ecoregion as likely not meeting a given alternative standard if the calculated AAI value is less than the target ANC level of the standard, recognizing that higher AAI values are more protective than lower values.

The results of this assessment are presented in Table 7–1a–d in the PA for a subset of ecoregions including those characterized as acid sensitive. Calculated annual AAI values at the ecoregion level are shown for each alternative standard considered. Based on these AAI values, Table 7–2 in the PA summarizes the number of acid-sensitive ecoregions that would likely not meet each of the alternative standards considered.[14] Calculated AAI values for all ecoregions categorized as relatively non-acid sensitive are shown in Table D–5 in Appendix D of the PA. In all cases, these relatively non-acid sensitive ecoregions were estimated to meet all of the alternative standards considered in this assessment.

As described above, the AAI values presented in Table 7–1a–d of the PA are based in part on data from 2005 CMAQ model simulations, which was used to generate values for F2 through F4 in the AAI equation, as well as to estimate annual average ambient air concentrations of NO_y and SO_x that reflect recent air quality in the absence of currently available monitored concentrations in sensitive ecoregions across the country. Water quality and hydrology data from water bodies within each ecoregion were also used in calculating the AAI values. Such data were initially used to calculate critical loads for each water body with sufficient data within an ecoregion so as to identify the nth percentile critical load representative of the ecoregion used in calculating the F1 factor for the ecoregion. As expected, the number of ecoregions that likely would not meet alternative standards increases with increasing percentile values and target ANC levels (U.S. EPA, 2011, Table 7–2). Out of 22 acid-sensitive ecoregions, the number of ecoregions that would likely not meet the alternative standards ranges from 22 for the most protective alternative standard considered (75 μeq/L, 90th percentile) to 4 for the least protective alternative standard (20 μeq/L, 70th percentile). It is apparent that both the percentile and the level chosen have a strong influence, over the ranges considered, in determining the number of areas that would likely not meet this set of alternative standards.

The PA observes that there is one grouping of these acid-sensitive ecoregions that would likely not meet almost all combinations of level and form under consideration (U.S. EPA, 2011, Table 7–2 and Appendix D). This group is made up of southern Appalachian mountain areas, including North Central Appalachians, 5.3.3; Ridge and Valley, 8.4.1; Central Appalachians, 8.4.2; Blue Ridge, 8.4.4; and Southwestern Appalachians, 8.4.9. In addition, these ecoregions exhibit the highest amounts of exceedance relative to alternative standards.

The Northern Appalachian and Atlantic Maritime Highlands (5.3.1), which includes the Adirondacks, and the Northern Lakes and Forests (5.2.1) of the upper midwest exhibit similar patterns with respect to in the role of level and percentile in identifying regions not likely to meet alternative standards, although there are considerably fewer cases compared to the regions in the Appalachians.

In the mountainous west, the Sierra Nevada (6.2.12), Idaho Batholith (6.2.15) and the Cascades (6.2.7) ecoregions likely would not meet alternative standards in fewer cases relative to eastern regions, with the Sierra Nevada ecoregion exhibiting relatively greater sensitivity compared to all western regions. Only in the upper part of the ranges of level and percentile do regions in the northern and central Rockies likely not meet alternative standards.

In considering these findings, the PA observes that the standard as defined by the AAI behaves in an intuitively logical manner. That is, an increase in ecoregions likely not to meet the standard is associated with higher alternative levels and percentiles, both of which contribute to a lower regionally representative critical load. Moreover, the areas of known adverse aquatic acidification effects are identified, mostly in high elevation regions or in the northern latitudes—the Adirondacks, Shenandoahs, northern midwest lakes and the mountainous west. These results reflect the first application of a nationwide model that integrates water quality and atmospheric processes at a national scale and provides findings that are consistent with our basic understanding of the extent of aquatic acidification across the U.S. What is particularly noteworthy is that this model is not initialized with a starting ANC based on water quality data, which likely would result in a reproduction of water quality observations. Rather, this standard reflects the potential of the changes in atmospheric concentrations of NO_y and SO_x to induce long-term sustained changes in surface water systems. The PA notes that the fact that the patterns of adversity based on applying this standard are commensurate with what is observed in surface water systems provides confidence in the basic underlying formulation of the standard.

The PA notes that the Appalachian mountain regions merit further inspection as they stand out as areas with the largest relative exceedances from a national perspective. Water quality data from these regions as well as an emissions sensitivity CMAQ simulation were considered to better understand the simulated behavior of these regions. The maps and tables in appendix D of the PA include paired comparisons of the CMAQ 2005 and emissions sensitivity simulations. The emissions sensitivity simulation reflects domain-wide reductions in NO_y and SO_x emissions of 48 percent and 42 percent, respectively, relative to 2005 base year emissions. The PA assumes that this emissions sensitivity simulation is indicative of future conditions.

The emissions sensitivity results project that many of the regions that likely would not meet the alternative standards based on recent air quality, especially at alternative levels of 20 and 35 μeq/L, would likely meet such standards in the future year scenario for the Appalachian mountain regions. It is apparent that the AAI calculations are especially sensitive to changes in SO_x emissions as the Appalachian regions have the highest SO_x concentrations and deposition rates (U.S. EPA, 2011,section 2), and the AAI equation responds as expected to modeled reductions in SO_x. The emissions sensitivity scenario is a prospective application of the standard, in the sense that rules derived from the air quality management process result in reductions of NO_y and SO_x emissions. Expected emission changes over the next two decades should be far greater than the 42 percent and 48 percent, respectively, SO_x and NO_y reductions used in this analysis, with a consequent further reduction in areas that would likely not meet alternative standards.

The Appalachian mountain regions generally have low DOC levels, average runoff rates, moderately low base cation supply and highly elevated sulfate concentrations. Collectively, those attributes do not suggest naturally acidic conditions as the availability of

[14] Tables 7–1a–d and 7–2 in the PA present assessment results for 29 ecoregions that had been initially characterized as acid sensitive. Subsequently, based on a broader set of criteria used to characterize ecoregions as acid sensitive, as discussed above in section III.B.5.a, the set of ecoregions characterized as acid sensitive was narrowed to include 22 ecoregions.

anthropogenic contributions of mineral acids is likely responsible for observed low ANC values in those regions.

The PA notes the Sierra Nevada region as an interesting case study, as it has some of the lowest critical load values nationally (U.S. EPA, 2011, Table D–3). Water quality data indicate extremely low sulfate, as expected given the relatively low SO_2 emissions in the western U.S. Extremely low base cation supply and low Neco, which mitigate the effect of nitrogen deposition, explain the low critical load values. Low Neco values appear to associate well with high elevation western U.S. regions, perhaps reflecting the more arid and reduced vegetation density relative to eastern U.S. regions. The proximity to high level nitrogen emissions combined with very low base cation supply explains the cases where the Sierra region likely does not meet alternative standards. Because Neco values are low in the Sierras, the system responds effectively to reductions of NO_x emissions, as illustrated in the maps and tables of Appendix D of the PA. Although Neco affords protection from the acidifying effects of nitrogen deposition, the availability of excessive nitrogen neutralization capacity also means that reductions in nitrogen are not as effective as reductions in SO_x in reducing the calculated AAI.

In reviewing these results, the PA observes that the analysis of the alternative combinations of level and form presented provide context for considering the impact of different standards. Since the AAI equation has been newly developed in the PA, these examples of estimated exceedances help to address the question of whether the AAI equation responds in a reasonable manner with regard to identifying areas of concern and to prospective changes in atmospheric conditions likely to result from future emissions reduction strategies. The PA concludes that the behavior of the AAI calculations is both reasonable and explainable, which the PA concludes serves to increase confidence in considering a standard defined in terms of the AAI.

F. Characterization of Uncertainties

This section summarizes discussions of the results of analyses and assessments, presented more fully in the PA (U.S. EPA, 2011, section 7.6 and Appendices F and G), intended to address the relative confidence associated with the linked atmospheric-ecological effects system described above. An overview of uncertainties is presented in the context of the major structural components underlying the standard, as well as with regard to areas of relatively high uncertainty. The section closes with a discussion of data gaps and uncertainties associated with the use of ecological and atmospheric modeling to specify the factors in the AAI equation, which can be used to guide future field programs and longer-term research efforts.

1. Overview of Uncertainty

As discussed in the PA (U.S. EPA, 2011, Table 7–3), there is relatively low uncertainty with regard to the conceptual formulation of the overall structure of the AAI-based standard that incorporates the major associations linking biological effects to air concentrations. Based on the strength of the evidence that links species richness and mortality to water quality, the associations are strongly causal and without any obvious confounding influence. The strong association between the ecosystem indicator (ANC) and the causative water chemistry species (dissolved aluminum and hydrogen ion) reinforces the confidence in the linkage between deposition of nitrogen and sulfur and effects. This strong association between ANC and effects is supported by a sound mechanistic foundation between deposition and ANC. The same mechanistic strength holds true for the relationship between ambient air levels of nitrogen and sulfur and deposition, which completes the linkage from ambient air indicators through deposition to ecological effects.

There are relatively higher uncertainties, however, in considering specific elements within the structure of an AAI-based standard, including the deposition of SO_x, NO_y, and NH_x as well as the critical load-related component, each of which can vary within and across ecoregions. Overall system uncertainty relates not just to the uncertainty in each such element, but also to the combined uncertainties that result from linking these elements together within the AAI-based structure. Some of these elements—including, for example, dry deposition, pre-industrial base cation production, and reduced nitrogen deposition—are estimated with less confidence than other elements (U.S. EPA, 2011, Table 7.3). The uncertainties associated with all of these elements, and the combination of these elements through the AAI equation, are discussed below and in the following sections related to measured data gaps and modeled processes for both air quality and water quality.

The lack of observed dry deposition data is constrained by resources and the lack of efficient measurement technologies. Progress in reducing uncertainties in dry deposition will depend on improved atmospheric concentration data and direct deposition flux measurements of the relevant suite of NO_y and SO_x species.

Pre-industrial base cation productivity by definition is not observable. Contemporary observations and inter-model comparisons are useful tools that would help reduce the uncertainty in estimates of preindustrial base cation productivity used in the AAI equation. In characterizing contemporary base cation flux using basic water quality measurements (*i.e.,* major anion and cation species as defined in equation 2.11 in the PA), it is reasonable to assume that a major component of contemporary base cation flux is associated with pre-industrial weathering rates. To the extent that multiple models converge on similar solutions, greater confidence in estimating pre-industrial base cation production would be achieved.

Characterization of NH_x deposition has been evolving over the last decade. The relatively high uncertainty in characterizing NH_x deposition is due to both the lack of field measurements and the inherent complexity of characterizing NH_x with respect to source emissions and dry deposition. Because ammonia emissions are generated through a combination of man-made and biological activities, and ammonia is semi-volatile, the ability to characterize spatial and temporal distributions of NH_x concentrations and deposition patterns is challenging. While direct measurement of NH_x deposition is resource intensive because of the diffuse nature of sources (*i.e.,* area-wide and non-point sources), there have been more frequent deposition flux studies, relative to other nitrogen species, that enable the estimation of both emissions and dry deposition. Also, while ammonia has a relatively high deposition velocity and traditionally was thought to deposit close to the emissions release areas, the semi-volatile nature of ammonia results in re-entrainment back into the lower boundary layer resulting in a more dispersed concentration pattern exhibiting transport type characteristics similar to longer lived atmospheric species. These inherent complexities in source characterization and ambient concentration patterns raise the uncertainty level of NH_x in general. However, the PA notes that progress is being made in measuring ammonia with cost efficient samplers and anticipates the gradual evolution of a spatially robust ammonia sampling network that would help support analyses to reduce underlying uncertainties in NH_x

deposition. Also, from an aquatic acidification perspective, NH_x is not as important a driver as NO_y and SO_x in the mountainous areas in the eastern U.S. However, the relative importance of NH_x is likely to increase over time, in light of air quality rules in place designed to reduce emissions of NO_y and SO_x.

2. Uncertainties Associated With Data Gaps

In summarizing uncertainties with respect to available measurement data and the use of ecological and atmospheric models, the PA indentified data gaps and model uncertainties in relative terms by comparing, for example, the relative richness of data between geographic areas or environmental media. With regard to relevant air quality measurements, the PA notes that such measurements are relatively sparse in the western U.S. While the spatial extent of CASTNET coverage has gradually incorporated western U.S. locations with support from the NPS, the relative density of monitoring sites is much less than that in the eastern U.S. This relative disparity in spatial density of monitors is exacerbated as air quality patterns in the mountainous west generally exhibit greater spatial heterogeneity due to dramatic elevation gradients that impact meteorology and air mass flow patterns. Similarly, water quality data coverage is far more comprehensive in the eastern U.S. relative to the west

Measurements of NO_y notably are lacking in both eastern and western acid-sensitive ecoregions. This adds uncertainty to the use of the AAI equation as the lack of NO_y data limits efforts to evaluate air quality modeling of NO_y that is the basis for quantifying factor F3 in the AAI equation. The lack of NO_y measurements also limits efforts to characterize the variability and representativeness of modeled NO_y concentrations within and across ecoregions. Currently, the Agency's ability to define the protection likely to be afforded by alternative standards (in terms of alternative levels and percentiles) is compromised by the lack of a full set of ambient air quality indicator measurements, notably including NO_y, throughout sensitive ecoregions across the U.S.

Further, obtaining measurement of the dominant species that comprise NO_y (HNO_3, true NO_2, NO, p–NO_3, and PAN) would be useful to evaluate performance of NO_y samplers. Beyond the more well known dominant components of NO_y, research efforts would be needed to characterize total reactive nitrogen that may include significant amounts of organically-bound nitrogen (beyond PAN) which is poorly understood with regard to emission sources and concentration levels.

Field measurements of NH_x have been extremely limited, but have begun to be enhanced through the NADP's passive ammonia network (AMoN). The AMoN measures ammonia at over 50 sites, with more than 35 at CASTNET locations. Enhanced spatial coverage of reduced nitrogen measurements, particularly to understand within and across ecoregion variability, and the inclusion of some continuous observations would provide a better understanding of the uncertainty in the F2 factor in the AAI equation and of the representativeness of modeled NH_x deposition within and across ecoregions.

With regard to water quality data, the PA notes that such data are typically limited relative to air quality data sets, and are also relatively sparse in the western U.S. The TIME/LTM water quality sampling program in the eastern U.S. (as described in chapter 2 of the PA) is an appropriate complement to national air monitoring programs as it affords consistency across water bodies in terms of sampling frequency and analysis protocols. Consideration should be given to extending the TIME/LTM design to all acid sensitive ecoregions, with priority for areas in the western mountains that are data limited and showing initial signs of adversity particularly with respect to aquatic acidification. The lack of a regulatory requirement for TIME/LTM often jeopardizes funding support of this resource that is especially valuable and cost effective. While there are several state and local agency water quality data bases, it is unclear the extent to which differences in sampling, chemical analysis and reporting protocols would impact the use of such data for the purpose of better understanding the degree of protectiveness that would be afforded by an AAI-based standard within sensitive ecoregions across the country. In addition, our understanding of water quality in Alaska and Hawaii and the acid sensitivity of their ecoregions is particularly limited.

Water quality data and modeling support the standard setting process. As more water bodies are sampled, the critical load data bases would expand, enabling clearer delineation of ecoregion representative critical loads in terms of the nth percentile. This would provide more refined characterization of the degree of protection afforded by a given standard. Longer term, the availability of water quality trend data (annual to monthly sampled) would support accountability assessments that examine if an ecoregion's response to air management efforts is as predicted by earlier model forecasting. The most obvious example is the long-term response of water quality ANC change to changes in calculated AAI, deposition, ambient NO_y and SO_x concentrations, and emissions. In addition, water quality trends data provide a basis for evaluating and improving the parameterizations of processes in critical load models applied at the ecoregion scale related to nitrogen retention and base cation supply. A better understanding of soil processes, especially in the southern Appalachians, would enhance efforts to examine the variability within ecoregions of the soil-based adsorption and exchange processes which moderate the supply of major cations and anions to surface waters and strongly influence the response of surface water ANC to changes in deposition of nitrogen and sulfur.

3. Uncertainties in Modeled Processes

As discussed in the PA, from an uncertainty perspective, gaps in field measurement data are related to uncertainties in modeled processes and in the specific application of such models. As noted above, processes that are embodied in an AAI-based standard are modeled using the CMAQ atmospheric model and steady state ecological models. These models are characterized in the ISA as being well established and they have undergone extensive peer review. Nonetheless, the application of these models for purposes of specifying the factors in the AAI equation, on an ecoregion scale, is a new application that introduces uncertainties, as noted below, especially in areas with limited observational data that can be used to evaluate this specific application. Understanding uncertainties in relevant modeled process thus involves consideration of the uncertainties associated with applying each model as well as the combination of these uncertainties as the models are applied in combination within the AAI framework.

With regard to the application of CMAQ for purposes of use in an AAI-based standard, the modeling of dry deposition has been identified as having a relatively high degree of uncertainty. Due to a combination of system complexity and resource constraints, there is no routine observational basis for directly comparing modeled dry deposition and measurements. Periodic dry deposition flux experiments covering a variety of vegetation, surfaces and meteorology across seasons would

enable a more robust evaluation of modeled deposition of nitrogen and sulfur. Given the difficulty in acquiring dry deposition observations, it becomes especially important to evaluate the model's ability to capture temporal and spatial ambient air patterns of individual nitrogen and sulfur species which are used to drive dry deposition calculations in models. For example, reducing a generally acknowledged positive bias in model-predicted SO_2 relative to observations is especially relevant to the AAI-based standard, as SO_2 deposition is a dominant contributor to total acidifying deposition in the eastern U.S. With respect to oxidized nitrogen, observations of individual NO_y species are important as air quality models calculate the individual deposition of each species. The modeled transference ratios, T_{NOy} and T_{SOx} used in factors F3 and F4 rely on CMAQ's ability to characterize both deposition and concentration. Consequently, a better understanding of the variability of these factors within and across ecoregions could be achieved by improved availability of measured ambient concentrations and deposition observations.

Steady state biogeochemical ecosystem modeling is used to develop critical load estimates that are incorporated in the AAI equation through factor F1. Consequently, the PA notes that an estimate of the temporal response of surface water ANC to deposition and air concentration changes is not directly available. Lacking a predicted temporal response impairs the ability to conduct accountability assessments down to the effects level. Accountability assessments would examine the response of each step in the emissions source through air concentration—deposition—surface water quality—biota continuum. The steady state assumption at the ecosystem level does not impair accountability assessments through the air concentration/deposition range of that continuum. However, in using steady state ecosystem modeling, several assumptions are made relative to the long-term importance of processes related to soil adsorption of major ions and ecosystem nitrogen dynamics. Because these models often were developed and applied in glaciated areas with relatively thin and organically rich soils, their applicability is relatively more uncertain in areas such as those in the non-glaciated clay-based soil regions of the central Appalachians. Consequently, it is desirable to develop the information bases to drive simple dynamic ecosystem models that incorporate more detailed treatment of subsurface processes, such as adsorption and exchange processes and sulfate absorption.

4. Applying Knowledge of Uncertainties

An understanding of the relative uncertainties in a system assists in setting priorities for data collection efforts and research, with the expectation that such efforts would reduce uncertainties over time and afford greater confidence in applications of an AAI-based standard. Because of the uniquely wide breadth of pollutants and environmental media addressed by an AAI-based multi-pollutant standard, there are a wide range of uncertainties that are important to consider relative to single pollutant standards that typically address only direct effects of ambient air exposures. For an AAI-based standard, a reduction of the uncertainties across the various modeled processes at the ecoregion scale would lead to greater confidence in the degree of protection afforded by the standard.

The PA notes that there is generally low uncertainty with regard to the conceptual development and related major components of this standard. In recognizing the scientific soundness of the basic structure of this standard, the PA notes that future efforts would be appropriately directed at expanding the availability of relevant data for ecoregion-specific evaluation and application of the relevant modeling of ecological and atmospheric processes, as identified above. Such efforts would further support consideration of an AAI-based standard and would guide field studies and analyses designed to improve the longer-term confidence in such a standard.

G. CASAC Advice

The CASAC has advised EPA concerning the ISA, the REA, and the PA. The CASAC has endorsed EPA's interpretation of the science embodied in the ISA and the assessment approaches and conclusions incorporated in the REA.

Most recently, CASAC has considered the information in the final PA in providing its recommendations on the review of the new multi-pollutant standard developed in that document and discussed above (Russell and Samet, 2011a). In so doing, CASAC has expressed general support for the conceptual framework of the standard based on the underlying scientific information, as well as for the conclusions in the PA with regard to indicators, form, averaging time, and level of the standard that are appropriate for consideration by the Agency in reaching decisions on the review of the secondary NAAQS for oxides of nitrogen and sulfur:

> The final *Policy Assessment* clearly sets out the basis for the recommended ranges for each of the four elements (indicator, averaging time, level and form) of a potential NAAQS that uses ambient air indicators to address the combined effects of oxides of nitrogen and oxides of sulfur on aquatic ecosystems, primarily streams and lakes. As requested in our previous letters, the *Policy Assessment* also describes the implications of choosing specific combinations of elements and provides numerous maps and tabular estimates of the spatial extent and degree of severity of NAAQS exceedances expected to result from possible combinations of the elements of the standard.
>
> We believe this final PA is appropriate for use in determining a secondary standard to help protect aquatic ecosystems from acidifying deposition of oxides of sulfur and nitrogen. EPA staff has done a commendable job developing the innovative Aquatic Acidification Index (AAI), which provides a framework for a national standard based on ambient concentrations that also takes into account regional differences in sensitivities of ecosystems across the country to effects of acidifying deposition. (Russell and Samet, 2011a)

The CASAC also recommended that as EPA moves forward in the regulatory process ''some attention should be given to our residual concern that the available data may reflect the more sensitive water bodies and thus, the selection of percentiles of waterbodies to be protected could be conservatively biased'' (Russell and Samet, 2011a). In addition, CASAC found some improvements could be made to the uncertainty analysis, as noted below. With respect to indicators, CASAC supports the use of SO_x and NO_y as ambient air indicators (discussed above in section III.A) and ANC as the ecological indicator (discussed above in section III.B.1):

The use of NO_y and SO_x as atmospheric indicators of oxides of nitrogen and sulfur atmospheric concentrations is well justified. The use in the AAI of NO_y and SO_x as atmospheric indicators of oxides of nitrogen and sulfur concentrations is useful and corresponds with other efforts by EPA. As we have stated previously, CASAC also agrees that ANC is the most appropriate ecological indicator of aquatic ecosystem response and resiliency to acidification (Russell and Samet, 2011a).

With respect to the form of the standard (discussed above in section III.B), CASAC stated the following:

> EPA has developed the AAI, an innovative ''form'' of the NAAQS itself that incorporates

the multi-pollutant, multi-media, environmentally modified, geographically variable nature of SO_x/NO_y deposition-related aquatic acidification effects. With the caveats noted below, CASAC believes that this form of the NAAQS as described in the final *Policy Assessment* is consistent with and directly reflective of current scientific understanding of effects of acidifying deposition on aquatic ecosystems. (Russell and Samet, 2011a)

CASAC agrees that the spatial components of the form in the Policy Assessment are reasonable and that use of Omernick's ecoregions (Level III) is appropriate for a secondary NAAQs intended to protect the aquatic environment from acidification * * * (Russell and Samet, 2011a)

The ''caveats'' noted by CASAC include a recognition of the importance of continuing to evaluate the performance of the CMAQ and ecological models to account for model uncertainties and to make the model-dependent factors in the AAI more transparent. In addition, CASAC noted that the role of DOC and its effects on ANC would benefit from further refinement and clarification (Russell and Samet, 2011a). While CASAC expressed the view that the ''division of ecoregions into 'sensitive' and 'non-sensitive' subsets, with a more protective percentile applied to the sensitive areas, also seems reasonable'' (Russell and Samet, 2011a), CASAC also noted that there was the need for greater clarity in specifying how appropriate screening criteria would be applied in assigning ecoregions to these categories. Further, CASAC identified potential biases in critical load calculations and in the regional representativeness of available water chemistry data, leading to the observation that a given percentile of the distribution of estimated critical loads may be protective of a higher percentage of surface waters in some regions (Russell and Samet, 2011a).

With respect to averaging time (discussed above in section III.C), CASAC stated the following:

Considering the cumulative nature of the long-term adverse ecological effects and the year-to-year variability of atmospheric conditions (mainly in the amount of precipitation), CASAC concurs with EPA that an averaging time of three to five years for the AAI parameters is appropriate. A longer averaging time would mask possible trends of AAI, while a shorter averaging time would make the AAI being more influenced by the conditions of the particular years selected. (Russell and Samet, 2011a)

With respect to level as well as the combination of level and form as they are presented as alternative standards (discussed above in sections III.D–E), CASAC stated the following:

CASAC agrees with EPA staff's recommendation that the ''level'' of the alternative AAI standards should be within the range of 20 and 75 μeq/L. We also recognize that both the ''level'' and the form of any AAI standard are so closely linked in their effectiveness that these two elements should be considered together. (Russell and Samet, 2011a)

When considered in isolation, it is difficult to evaluate the logic or implications of selecting from percentiles (70th to 90th) of the distribution of estimated critical loads for lakes in sensitive ecoregions to determine an acceptable amount of deposition for a given ecoregion. However, when these percentile ranges are combined with alternative levels within the staff-recommended ANC range of 20 to 75 microequivalents per liter (μeq/L), the results using the AAI point to the ecoregions across the country that would be expected to require additional protection from acidifying deposition. Reasonable choices were made in developing the form. The number of acid sensitive regions not likely to meet the standard will be affected both by choice of ANC level and the percentile of the distribution of critical loads for lakes to meet alternative ANC levels in each region. These combined recommendations provide the Administrator with a broad but reasonable range of minimally to substantially protective options for the standard. (Russell and Samet, 2011a)

CASAC also commented on EPA's uncertainty analysis, and provided advice on areas requiring further clarification in the proposed rule and future research. The CASAC found it ''difficult to judge the adequacy of the uncertainty analysis performed by EPA because of lack of details on data inputs and the methodology used, and lack of clarity in presentation'' (Russell and Samet, 2011a). In particular, CASAC identified the need for more thorough model evaluations of critical load and atmospheric modeling, recognizing the important role of models as they are incorporated in the form of the standard. In light of the innovative nature of the standard developed in the PA, CASAC identified ''a number of areas that should be the focus of further research'' (Russell and Samet, 2011a). While CASAC recognized that EPA staff was able to address some of the issues in the PA, they also noted areas ''that would benefit from further study or consideration in potential revisions or modifications to the form of the standard.'' Such research areas include ''sulfur retention and mobilization in the soils, aluminum availability, soil versus water acidification and ecosystem recovery times.'' Further, CASAC encouraged future efforts to monitor individual ambient nitrogen species, which would help inform further CMAQ evaluations and the specification of model-derived elements in the AAI equation (Russell and Samet, 2011a).

H. Administrator's Proposed Conclusions

Having concluded that the existing NO_2 and SO_2 secondary standards are neither sufficiently protective nor appropriate to address deposition-related effects associated with oxides of nitrogen and sulfur (section II.D above), the Administrator has considered whether it is appropriate at this time to set a new multi-pollutant standard for that purpose, with a structure that would better reflect the available science regarding acid deposition. In considering this, she recognizes that such an appropriate standard, for purposes of section 109(b) and (d) of the CAA,[15] must in her judgment be requisite to protect public welfare, such that it would be neither more nor less stringent that necessary for that purpose. In particular, she has focused on the new standard developed in the PA and reviewed by CASAC, as discussed above. In so doing, the Administrator first considered the extent to which there is a scientific basis for development of such a standard, specifically with regard to a standard that would provide protection from deposition-related aquatic acidification in sensitive aquatic ecosystems in areas across the country. As discussed above, the Administrator notes that the ISA concludes that the available scientific evidence is sufficient to infer a causal relationship between acidifying deposition of nitrogen and sulfur in aquatic ecosystems, and that the deposition of oxides of nitrogen and sulfur both cause such acidification under current conditions in the U.S. Further, the ISA concludes that there are well-established water quality and biological indicators of aquatic acidification as well as well-established models that address deposition, water quality, and effects on ecosystem biota, and that ecosystem sensitivity to acidification varies across the country according to present and historic nitrogen and sulfur deposition as well as geologic, soil, vegetative, and hydrologic factors. Based on these considerations, the Administrator agrees with the conclusion in the PA, and supported by CASAC, that there is a strong scientific basis for development

[15] Section 109(d)(1) requires that ''* * * the Administrator shall complete a thorough review * * * and shall make such revisions in such criteria and standards and promulgate such new standards as may be appropriate under * * * subsection 109(b) of this section.'' [emphasis added]

of a standard with the general structure presented in the PA.

The Administrator also recognizes that the conceptual framework for an ecologically relevant, multi-pollutant standard, which was initially explored in the REA and further developed in the PA, builds on the information in the ISA. She notes that the structure of the standard addresses the combined effects of deposition from oxides of nitrogen and sulfur by characterizing the linkages between ambient concentrations, deposition, and aquatic acidification, and that the structure of the standard takes into account relevant variations in these linkages across the country. She recognizes that while the standard is innovative and unique, the structure of the standard is well grounded in the science underlying the relationships between ambient concentrations of oxides of nitrogen and sulfur and the aquatic acidification related to deposition of nitrogen and sulfur associated with such ambient concentrations.

While the Administrator recognizes the strong scientific foundation for the structure of an AAI-based standard, she also recognizes that the standard depends on atmospheric and ecological modeling, based on appropriate data, to specify the terms of an equation that incorporates the linkages between ambient concentrations, deposition, and aquatic acidification. This equation, which defines an aquatic acidification index (AAI), has the effect of translating spatially variable ecological effects into a potential national standard. With respect to establishing the specific terms of this equation, there are a number of inherent uncertainties and complexities that are relevant to the question of whether it is appropriate under section 109 to set a specific AAI-based standard at this time, recognizing that such a standard must be requisite to protect public welfare without being either more or less stringent than necessary for this purpose. As discussed above, these uncertainties and complexities generally relate not to the structure of the standard, but to the quantification of the various elements of the standard, such as the F factors discussed earlier in this section and their representativeness at an ecoregion scale. These uncertainties and complexities currently limit efforts to characterize the degree of protectiveness that would be afforded by such a standard, within the ranges of levels and forms identified in the PA, and the representativeness of F factors in the AAI equation described above and in the PA. These important uncertainties have been generally categorized as limitations in available field data as well as uncertainties that are related to reliance on the application of ecological and atmospheric modeling at the ecoregion scale to specify the various elements of the AAI.

With regard to data limitations, the Administrator observes that there are several important limitations in the available data upon which elements of the AAI are based. For example, while ambient measurements of NO_y are made as part of a national monitoring network, the monitors are not located in locations that are representative of sensitive aquatic ecosystems. While air and water quality data are generally available in areas in the eastern U.S., there is relatively sparse coverage in mountainous western areas where a number of sensitive aquatic ecosystems are located. Further, even in areas where relevant data are available, small sample sizes impede efforts to characterize the representativeness of the available data, which was noted by CASAC as being of particular concern. Also, measurements of reduced forms of nitrogen are available from only a small number of monitoring sites, and emission inventories for reduced forms of nitrogen used in atmospheric modeling are subject to considerable uncertainty.

With regard to uncertainties related to the use of ecological and atmospheric modeling, the Administrator notes in particular that model results are difficult to evaluate due to a lack of relevant observational data. For example, relatively large uncertainties are introduced by a lack of data with regard to pre-industrial environmental conditions and other parameters that are necessary inputs to critical load models that are the basis for factor F1 in the AAI equation. Also, observational data are not generally available to evaluate the modeled relationships between nitrogen and sulfur in the ambient air and associated deposition, which are the basis for the other factors (*i.e.,* F2, F3, and F4) in the AAI equation.

In combination, these limitations and uncertainties result in a considerable degree of uncertainty as to how well the quantified elements of the AAI standard would predict the actual relationship between varying ambient concentrations of oxides of nitrogen and sulfur and steady state ANC levels across the distribution of water bodies within the various ecoregions in the U.S. Because of this, there is considerable uncertainty as to the actual degree of protectiveness that such a standard would provide, especially for acid-sensitive ecoregions. The Administrator recognizes that the AAI equation, with factors quantified in the ranges discussed above and described more fully in the PA, generally performs well in identifying areas of the country that are sensitive to such acidifying deposition and indicates, as expected, that lower ambient levels of oxides of nitrogen and sulfur would lead to higher calculated AAI values. However, the uncertainties discussed here are critical for determining the actual degree of protection that would be afforded such areas by any specific target ANC level and percentile of water bodies that would be chosen in setting a new AAI-based standard, and thus for determining an appropriate AAI-based standard that meets the requirements of section 109.

In considering these uncertainties, the Administrator notes that CASAC acknowledged that important uncertainties remain that would benefit from further study and data collection efforts, which might lead to potential revisions or modifications to the form of the standard developed in the PA. She also notes that CASAC encouraged the Agency to engage in future monitoring and model evaluation efforts to help inform the specification of model-derived elements in the AAI equation.

Based on the above considerations, the Administrator has determined that it is not appropriate under section 109 to set a new multi-pollutant standard to address deposition-related effects of oxides of nitrogen and sulfur on aquatic acidification at this time. Setting a NAAQS generally involves consideration of the degree of uncertainties in the science and other information, such as gaps in the relevant data and, in this case, limitations in the evaluation of the application of relevant ecological and atmospheric models at an ecoregion scale. As noted above, the issue here is not a question of uncertainties about the scientific soundness of the structure of the AAI, but instead uncertainties in the quantification and representativeness of the elements of the AAI as they vary in ecoregions across the country. At present, these uncertainties prevent an understanding of the degree of protectiveness that would be afforded to various ecoregions across the country by a new standard defined in terms of a specific nationwide target ANC level and a specific percentile of water bodies for acid-sensitive ecoregions and thus prevent identification of an appropriate standard.. The Administrator has considered whether these uncertainties could be appropriately accounted for by choosing either a more or less protective target ANC level and percentile of water bodies than would otherwise be chosen if the uncertainties did not substantially limit the confidence that can

appropriately be ascribed to the quantification of the AAI elements. However, in the Administrator's judgment, the uncertainties are of such nature and magnitude that there is no reasoned way to choose such a specific nationwide target ANC level or percentile of water bodies that would appropriately account for the uncertainties, since neither the direction nor the magnitude of change from the target level and percentile that would otherwise be chosen can reasonably be ascertained at this time.

Based on the above considerations, the Administrator judges that the current limitations in relevant data and the uncertainties associated with specifying the elements of the AAI based on modeled factors are of such nature and degree as to prevent her from reaching a reasoned decision such that she is adequately confident as to what level and form (in terms of a selected percentile) of such a standard would provide any particular intended degree of protection of public welfare that the Administrator determined satisfied the requirements to set an appropriate standard under section 109. While acknowledging that CASAC supported moving forward to establish the standard developed in the PA, the Administrator also observes that CASAC supported conducting further field studies that would better inform the continued development or modification of such a standard. Given the large uncertainties and complexities inherent in quantifying the elements of such a standard, largely deriving from the unprecedented nature of the standard under consideration in this review, and having fully considered CASAC's advice, the Administrator provisionally concludes that it is premature to set a new, multi-pollutant secondary standard for oxides of nitrogen and sulfur at this time, and as such she is proposing not to set such a new secondary standard.

While it is premature to set such a multi-pollutant standard at this time, the Administrator determines that the Agency should undertake a field pilot program to gather additional data, and that it is appropriate that such a program be undertaken before, rather than after, reaching a decision to set such a standard. As described below in section IV, the purpose of the program is to collect and analyze data so as to enhance our understanding of the degree of protectiveness that would likely be afforded by a standard based on the AAI as developed in the PA. This will provide additional information to aid the Agency in considering an appropriate multi-pollutant standard, specifically with respect to the acidifying effects of deposition of oxides of nitrogen and sulfur. PA. Data generated by this field program will also support development of an appropriate monitoring network that would work in concert with such a standard to result in the intended degree of protection. The data and analyses generated as a result of this program will serve to inform the next review of the NAAQS for oxides of nitrogen and sulfur. The information generated during the field program can also be used to help state agencies and EPA better understand how an AAI-based standard would work in terms of the implementation of such a standard.

Based on the above considerations, the Administrator is proposing not to set a new multi-pollutant AAI-based secondary standard for oxides of nitrogen and sulfur in this review. In reaching this decision, the Administrator recognizes that the new NO_2 and SO_2 primary 1-hour standards set in 2010, while not ecologically relevant for a secondary standard, will nonetheless result in reductions in oxides of nitrogen and sulfur that will directionally benefit the environment by reducing NOy and SOx deposition to sensitive ecosystems. EPA is proposing to revise the secondary standards by adding secondary standards identical to the NO_2 and SO_2 primary 1-hour standards set in 2010. More specifically, EPA is proposing a 1-hour secondary NO_2 standard set at a level of 100 ppb and a 1-hour secondary SO_2 standard set at a level of 75 ppb. While this will not add secondary standards of an ecologically relevant form to address deposition-related effects, it will directionally provide some degree of additional protection. This is consistent with the view that the current secondary standards are neither sufficiently protective nor appropriate in form, but that it is not appropriate to propose to set a new, ecologically relevant multi-pollutant secondary standard at this time, for all of the reasons discussed above.

While not a basis for this decision, the Administrator also recognizes that a new, innovative AAI-based standard would raise significant implementation issues that would need to be addressed consistent with the CAA requirements for implementation-related actions following the setting of a new NAAQS. It will take time to address these issues, during which the Agency will be conducting a field pilot program to gather relevant data and the environment will benefit from reductions in oxides of nitrogen and sulfur resulting from the new NO_2 and SO_2 primary standards, as noted above, as well as reductions expected to be achieved from EPA's Cross-State Air Pollution Rule and Mercury and Air Toxics standards. These implementation-related issues are discussed in more detail below in section IV.A.5.

The Administrator solicits comment on all aspects of this proposed decision, including the framework and elements of a multi-pollutant standard for oxides of nitrogen and sulfur to address deposition-related effects on sensitive ecosystems, with a focus on aquatic acidification, and the uncertainties and complexities associated with the development of such a standard at this time. The Administrator also solicits comment on the field pilot program and related monitoring methods as discussed below in section IV.

IV. Field Pilot Program and Ambient Monitoring

This section describes EPA's plans for a field pilot program and the evaluation of monitoring methods for ambient air indicators of NO_y and SO_x to implement the Administrator's decision to undertake such a field monitoring program in conjunction with her decision to propose not to set a new multi-pollutant secondary standard in this review, as discussed above in section III.H. As noted above and discussed below in section IV.A, the field pilot program is intended to collect and analyze data so as to enhance our understanding of the degree of protectiveness that would likely be afforded by a standard based on the AAI as developed in the PA. Data generated by this field program would also support development of an appropriate monitoring network that would work in concert with such a standard to result in the intended degree of protection. As discussed below in section IV.B, the evaluation of monitoring methods focuses on the development of Federal Reference Methods/Federal Equivalent Methods (FRM/FEM) for NO_y and SO_x. The EPA notes that the monitoring program described here is intended to be coordinated with EPA's CASTNET as a supplement to existing monitoring programs and is beyond the scope of the current CASTNET program.

A. Field Pilot Program

This section presents the objectives of a field pilot program (section IV.A.1) that would gather relevant field data over a 5-year period in a sample of three to five sensitive ecoregions across the country. An overview of the scope and structure of the field program, with a focus on measurements of ambient air indicators of oxides of nitrogen and

sulfur, is presented in section IV.A.2. Section IV.A.3 explains the role of additional complementary measurements beyond the ambient air indicators that would be included in the program, and section IV.A.4 discusses a parallel longer-term research agenda, both of which are guided by the uncertainties discussed above in section III. Section IV.A.5 identifies implementation challenges presented by an AAI-based standard that could be addressed in parallel with a field pilot program. Section IV.A.6 discusses engagement with stakeholder groups as part of the planned pilot program.

1. Objectives

Consideration of a new multi-pollutant standard to address deposition-related effects on sensitive aquatic ecoregions raises unique challenges relative to those typically raised in reviews of existing NAAQS for which an established network of FRM/FEM monitors, designed to measure the indicator pollutant, is generally available. The primary goal of this field pilot program, and the related monitoring program discussed in section IV.B, is to enhance our understanding of the degree of protectiveness that would likely be afforded by a standard based on the AAI, as described above in section III, so as to aid the Agency in considering an appropriate multi-pollutant standard that would be requisite to protect public welfare consistent with section 109 of the CAA, through the following objectives:

(1) Evaluate measurement methods for the ambient air indicators of NO_y and SO_x and consider designation of such methods as FRMs;

(2) Examine the variability and improve characterization of concentration and deposition patterns of NO_y and SO_x, as well as reduced forms of nitrogen, within and across a number of sensitive ecoregions across the country;

(3) Develop updated ecoregion-specific factors (*i.e.,* F1 through F4) for the AAI equation based in part on new observed air quality data within the sample ecoregions as well as on updated nationwide air quality model results and expanded critical load data bases, and explore alternative approaches for developing such representative factors;

(4) Calculate ecoregion-specific AAI values using observed NO_y and SO_x data and updated ecoregion-specific factors to examine the extent to which the sample ecoregions would meet a set of alternative AAI-based standards;

(5) Develop air monitoring network design criteria for an AAI-based standard;

(6) assess the use of total nitrate measurements as a potential alternative indicator for NO_y;

(7) Support related longer-term research efforts, including enhancements to and evaluation of modeled dry deposition algorithms; and

(8) Facilitate stakeholder engagement in addressing implementation issues associated with possible future adoption of an AAI-based standard.

2. Overview of Field Pilot Program

The CASTNET program (Figure IV–1) affords an available infrastructure relevant to an AAI-based standard, given the location of sites in some acid-sensitive ecoregions and various measurements of sulfur and nitrogen species. The EPA plans to use CASTNET sites in selected acid-sensitive ecoregions to serve as the platform for this pilot program, potentially starting in late 2012 and extending through 2018. The CASTNET sites in three to five ecoregions in acid-sensitive areas would collect NO_y and SO_x (*i.e.,* SO_2 and p-SO_4) measurements over a 5-year period. The initial step in developing a data base of observed ambient air indicators for oxides of nitrogen and sulfur requires the addition of NO_y samplers at the pilot study sites so that a full complement of indicator measurements are available to calculate AAI values. These CASTNET sites would also be used to make supplemental observations useful for evaluation of CMAQ's characterization of factors F2 –F4 in the AAI equation.

The selected ecoregions would account for geographic variability by including regions from across the U.S., including the east, upper midwest and west. Each selected region would have at least two existing CASTNET sites. Each of the pilot CASTNET sites would be used to evaluate the performance of the established methods, data retrieval and reporting procedures used in the AAI equation.

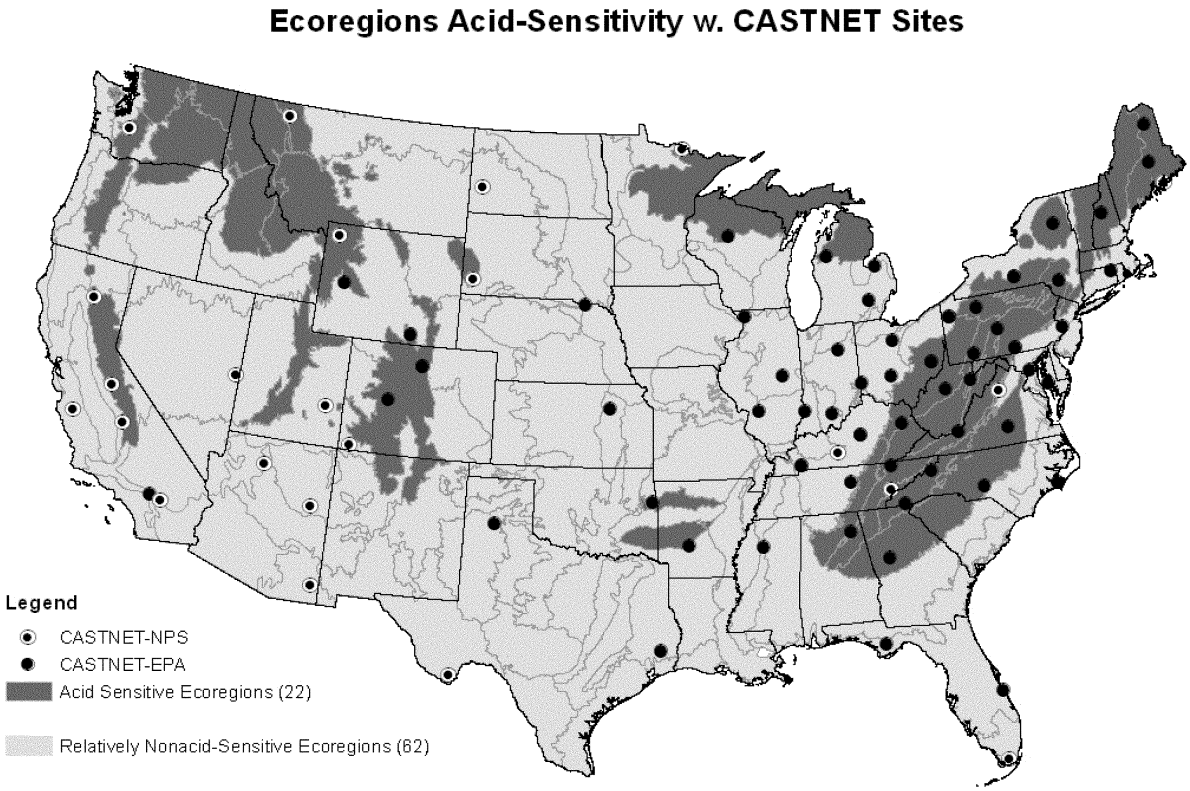

Figure IV-1. Location of CASTNET sites in relation to acid sensitive ecoregions.

Over the course of this 5-year pilot program, the most current national air quality modeling, based on the most current national emissions inventory, would be used to develop an updated set of F2—F4 factors. A parallel multi-agency national critical load data base development effort would be used as the basis for calculating updated F1 factors. As discussed above in section III.B, these factors would be based on average parameter values across an ecoregion. Using this new set of F factors, observations of NO_y and SO_x derived from the pilot program, averaged across each ecoregion, would be used to calculate AAI values in the sample ecoregions. The data from the pilot program would also be used to examine alternative approaches to generating representative air quality values, such as examining the appropriateness of spatial averaging in areas of high spatial variability.

3. Complementary Measurements

Complementary measurements may be performed at some sites in the pilot network to reduce uncertainties in the recommended methods and better characterize model performance and application to the AAI. The CASAC Air Monitoring and Methods Subcommittee (AMMS) advised EPA that such supplemental measurements were of critical importance in a field measurement program related to an AAI-based standard (Russell and Samet, 2011b).

Candidate complementary measurements to address sulfur, in addition to those provided by the CASTNET filter pack (CFP), include trace gas continuous SO_2 and speciated $PM_{2.5}$ measurements. The co-located deployment of a continuous SO_2 analyzer with the CFP for SO_2 will provide test data for determining suitability of continuous SO_2 measurements as a Federal Equivalent Method (FEM), as well as producing valuable time series data for model evaluation purposes. The weekly averaging time provided by the CFP adequately addresses the annual-average basis of an AAI-based secondary standard, but would not be applicable to short-term (*i.e.,* 1-hour) averages associated with the primary SO_2 standard. Conversely, because of the low concentrations associated with many acid-sensitive ecoregions, existing SO_2 Federal Reference Methods (FRMs) designated for use in determining compliance with the primary standard would not necessarily be appropriate for use in conjunction with an AAI-based secondary standard.

Co-locating the $PM_{2.5}$ sampler used in the EPA Chemical Speciation Network and the Interagency Monitoring of Protected Visual Environments (IMPROVE) network at pilot network sites would allow for characterizing the relationship between the CFP-derived p-SO_4 and the speciation samplers used throughout the state and local air quality networks. Note that CASTNET already has several co-located IMPROVE chemical speciation samplers. Because the AAI equation is based on concentration of p-SO_4, the original motivation for capturing all particle size fractions is not as important relative to simply capturing the concentration of total p-SO_4.

Candidate measurements to complement oxidized nitrogen measurements, in addition to the CFP, include a mix of continuous and periodic sampling for the dominant NO_y species, namely NO, true NO_2, PAN,

HNO_3, and p-NO_3. While there are several approaches to acquiring these measurements, perhaps the most efficient strategy would take advantage of the available CFP for total nitrate, and add a three-channel chemiluminescence instrument that will cycle between NO_y, true NO_2 and NO by adding photolytic detection for true NO_2. Other options for measuring true NO_2 would include adding either a stand-alone photolytic or cavity ring-down spectroscopy instrument. Measurements of PAN may be acquired either on a periodic basis through canister sampling and subsequent laboratory analysis or through emerging in-situ sampling and analysis methods. Although the CFP yields a reliable measurement of total nitrate, the t-NO_3 (*i.e.,* the sum of HNO_3 and p-NH_4) value, strong consideration may be given to direct measurement of HNO_3, which has the highest deposition velocity of all the dominant NO_y species. Similar to the use of continuous SO_2 data, these speciated NO_y data serve two purposes: evaluating total NO_y instrument behavior and evaluating air quality models. The measurement of individual NO_y species can be used to generate site-specific NO_y values for comparison to modeled NO_y, and will likely provide insight into and improvement of modeled dry deposition.

The CASAC AMMS (Russell and Samet, 2011b) recommended that EPA consider the use of t-NO_3 obtained from CASTNET sampling as an indicator for NO_y, reasoning that t-NO_3 is typically a significant fraction of deposited oxidized nitrogen in rural environments and CASTNET measurements are widely available. Collection of this data would support further consideration of using the CFP for t-NO_3 as the indicator of oxides of nitrogen for use in an AAI-based secondary standard.

The CASAC AMMS also recommended that total NH_x (NH_3 and p-NH_4) be considered as a proxy for reduced nitrogen species, reasoning that the subsequent partitioning to NH_3 and p-NH_4 may be estimated using equilibrium chemistry calculations. Reduced nitrogen measurements are used to evaluate air quality modeling which is used in generating factor F2. Additional studies are needed to determine the applicability of NH_x measurements and calculated values of NH_3 and NH_4 to the AAI.

The additional supplemental measurements of speciated NO_y, continuous SO_2 and NH_x will be used in future air quality modeling evaluation efforts. Because there often is significant lag in the availability of contemporary emissions data to drive air quality modeling, the complete use of these data sets will extend beyond the 5-year collection period of the pilot program. Consequently, the immediate application of those data will address instrument performance comparisons that explore the feasibility of using continuous SO_2 instruments in rural environments, and using the speciated NO_y data to assess NO_y instrument performance. Although contemporary air quality modeling will lag behind measurement data availability, the observations can be used in deposition models to compare observed transference ratios with the previously calculated transference ratios to test temporal stability of the ratios.

An extended water quality sampling effort should parallel the air quality measurement program to address some of the uncertainties related to factor F1 and the representativeness of the nth percentile critical load as discussed in section III.B.5.b.i. The objective of the water quality sampling would be to develop a larger data base of critical loads in each of the pilot ecoregions such that the nth percentile can adequately be characterized in terms of representing all water bodies. Opportunities to leverage and perhaps enhance existing ecosystem modeling efforts enabling more advanced critical load modeling and improved methods to estimate base cation production would be pursued. For example, areas with ongoing research studies producing data for dynamic critical load modeling would be considered when selecting the pilot ecoregions.

4. Complementary areas of research

The EPA recognizes that a source of uncertainty in an AAI-based secondary standard that would not be directly addressed in the pilot program stems from the uncertainty in the model used to link atmospheric concentrations to dry deposition fluxes. Currently, there are no ongoing direct dry deposition measurement studies at CASTNET sites that can be used to evaluate modeled results. It was strongly recommended by CASAC AMMS that a comprehensive sampling-intensive study be conducted in at least one, preferably two sites in different ecoregions to assess characterization of dry deposition of sulfur and nitrogen. These sites would be the same as those for the complementary measurements described above, but they would afford an opportunity to also complement dry deposition process research that benefits from the ambient air measurements collected in the pilot program. The concerns regarding uncertainties underlying an AAI-based secondary standard suggest that research that includes dry deposition measurements and evaluation of dry deposition models should be a high priority.

Similar leveraging should be pursued with respect to ecosystem research activities. For example, studies that capture a suite of soil, vegetation, hydrological, and water quality properties that can help evaluate more advanced critical load models would complement the atmospheric-based pilot program. In concept, such studies could provide the infrastructure for true multi-pollutant, multi-media ''super'' sites assuming the planning, coordination, and resource facets can be aligned. While this discussion emphasizes the opportunity of leveraging ongoing research efforts, consideration could be given to explicitly including related research components directly in the pilot program.

5. Implementation challenges

The CAA requires that once a NAAQS is established, designation and implementation must move forward. With a standard as innovative as the AAI-based standard considered in this review, the Administrator believes that its success will be greatly improved if, while additional data are being collected to reduce the uncertainties discussed above, the implementing agencies and other stakeholders have an opportunity to discuss and thoroughly understand how such a standard would work. And since, as noted above, emissions reductions that are directionally correct to reduce aquatic acidification will be occurring as a result of other CAA programs, the Administrator believes that this period of further discussion will not delay progress but will ensure that once implementation is triggered, agencies will be prepared to implement it successfully.

Consideration of an AAI-based secondary standard for oxides of nitrogen and sulfur would present significant implementation challenges because it involves multiple, regionally-dispersed pollutants and relatively complex compliance determinations based on regionally variable levels of NO_y and SO_x concentrations that would be necessary to achieve a national ANC target. The anticipated implementation challenges fall into three main categories: monitoring and compliance determinations for area designations, pre-construction permit application analyses of individual source impacts, and State Implementation Plan (SIP) development. Several overarching implementation questions that we

anticipate will be addressed in parallel with the field pilot program's five-year data collection period include:

(1) What are the appropriate monitoring network density and siting requirements to support a compliance system based on ecoregions?

(2) Given the unique spatial nature of the secondary standard (*e.g.,* ecoregions), what are the appropriate parameters for establishing nonattainment areas?

(3) How can new or modified major sources of oxides of nitrogen and oxides of sulfur emissions assess their ambient impacts on the standard and demonstrate that they are not causing or contributing to a violation of the NAAQS for preconstruction permitting? To what extent does the fact that a single source may be impacting multiple areas, with different acid sensitivities and variable levels of NO_y and SO_x concentrations that would be necessary to achieve a national ANC target, complicate this assessment and how can these additional complexities best be addressed?

(4) What additional tools, information, and planning structures are needed to assist states with SIP development, including the assessment of interstate pollutant transport and deposition?

(5) Would transportation conformity apply in nonattainment and maintenance areas for this secondary standard, and, if it does, would satisfying requirements that apply for related primary standards (*e.g.,* ozone, $PM_{2.5}$, and NO_2) be demonstrated to satisfy requirements for this secondary standard?

6. Final Monitoring Plan Development and Stakeholder Participation

The existing CASTNET sampling site infrastructure provides an effective means of quickly and efficiently deploying a monitoring program to support potential implementation of an AAI-based secondary standard, and also provides an additional opportunity for federally managed networks to collaborate and support the states, local agencies and tribes (SLT) in determining compliance with a secondary standard. A collaborative effort would help to optimize limited federal and SLT monitoring funds and would be beneficial to all involved. The CASTNET is already a stakeholder-based program with over 20 participants and contributors, including federal, state and tribal partners.

The CASAC AMMS generally endorsed the technical approaches used in CASTNET, but concerns were raised by individual representatives of state agencies concerning the perception of EPA-controlled management aspects of CASTNET and data ownership. Potential approaches to resolve these issues will be developed and evaluated in existing National Association of Clean Air Agencies (NACAA)/EPA ambient air monitoring workgroups. The EPA Office of Air and Radiation (which includes the Office of Air Quality Planning Standards, OAQPS; and the Office of Atmospheric Program's Clean Air Markets Division, OAP–CAMD), and their partners on the NACAA monitor steering committee will develop a prioritized specific plan that identifies the three to five ecoregions and the instrumentation to be deployed. The EPA anticipates that a cost estimate of the plan with priorities and options will be developed by January, 2012. Although this pilot program is focused on data collection, the plan will include details of the data analysis approaches as well as a vehicle that incorporates engagement from those within EPA and SLTs to foster progress on the implementation questions noted above in section IV.A.5.

If an AAI-based secondary standard were to be set in the future, deployment of a full national network would follow the pilot monitoring program. The number of sites deployed in the network will lead to increased confidence in capturing spatial patterns of air quality. Recognizing that this section presents the general elements of the field pilot programs, EPA intends to develop a more detailed field pilot program plan through a process that will engage the air quality management and research (atmospheric and ecosystem) communities, as well as other federal agencies, state and local agencies, and non-government based centers of expertise. The EPA is seeking comment and input on all aspects of this field pilot program.

B. Evaluation of Monitoring Methods

The EPA generally relies on monitoring methods that have been designated as FRMs or FEMs for the purpose of determining the attainment status of areas with regard to existing NAAQS. Such FRMs or FEMs are generally required to measure the air quality indicators that are compared to the level of a standard to assess compliance with a NAAQS. Prior to their designation by EPA as FRM/FEMs through a rulemaking process, these methods must be determined to be applicable for routine field use and need to have been experimentally validated by meeting or exceeding specific accuracy, reproducibility, and reliability criteria established by EPA for this purpose. As discussed above in section III.A, the ambient air indicators being considered for use in an AAI-based standard include SO_2, particulate sulfate (p-SO_4), and total reactive oxides of nitrogen (NO_y).

The CASTNET provides a well established infrastructure that would meet the basic location and measurement requirements of an AAI-based secondary standard given the rural placement of sites in acid sensitive areas. In addition, CFPs currently provide very economical weekly, integrated average concentration measurements of SO_2, p-SO_4, ammonium ion (NH_4) and t-NO_3, the sum of HNO_3 and p-NO_3.

While routinely operated instruments that measure SO_2, p-SO_4, NO_y and/or t-NO_3 exist, instruments that measure p-SO_4, NO_y, t-NO_3, or the CFP for SO_2 have not been designated by EPA as FRMs or FEMs. The EPA's Office of Research and Development has initiated work that will support future FRM designations by EPA for SO_2 and p-SO_4 measurements based on the CFP. Such a designation by EPA could be done for the purpose of facilitating consistent research related to an AAI-based standard and/or in conjunction with setting and supporting an AAI-based secondary standard.

Based on extensive review of literature and available data, the EPA has identified potential methods that appear suitable for measuring each of the three components of the indicators. These three methods are being considered as new FRMs to be used for measuring the ambient concentrations of the three components that would be needed to determine compliance with an AAI-based secondary standard.

For the SO_2 and p-SO_4 measurements, EPA is considering the CFP method, which provides weekly average concentration measurements for SO_2 and p-SO_4. This method has been used in the EPA's CASTNET monitoring network for 15 years, and strongly indicates that it will meet the requirements for use as an FRM for the SO_2 and p-SO_4 concentrations for an AAI-based secondary standard.

Although the CFP method would provide measurements of both the SO_2 and p-SO_4 components in a unified sampling and analysis procedure, individual FRMs will be considered for each. The EPA recognizes that an existing FRM to measure SO_2 concentrations using ultra-violet fluorescence (UVF) exists (40 CFR Part 50, Appendix A–1) for the purpose of monitoring compliance for the primary SO_2 NAAQS. However, several factors suggest that the CFP method would be

superior to that UVF FRM for monitoring compliance with an AAI-based secondary standard and will be discussed in more detail below.

For monitoring the NO_y component, a continuous analyzer for measuring NO_y is commercially available and is considered to be suitable for use as an FRM. This method is similar in design to the existing NO_2 FRM (described in 40 CFR Part 50, Appendix F), which is based on the ozone chemiluminescence measurement technique. The method is adapted to and further optimized to measure all NO_y. However, this NO_y method requires further evaluation before it can be fully confirmed as a suitable FRM. The EPA is currently completing a full scientific assessment of the NO_y method to determine whether it would be appropriate to consider for designation by EPA as an FRM. Specific details on these three methods are given below.

On February 16, 2011, EPA presented this set of potential FRMs to the CASAC AMMS for their consideration and comment. In response, the CASAC AMMS stated that, overall, it believes that EPA's planned evaluation of methods for measuring NO_y, SO_2 and p-SO_4 as ambient air indicators is a suitable approach in concept. On supporting the CFP method as a potential FRM for SO_2, CASAC stated that they felt that the CFP is adequate for measuring long-term average SO_2 gas concentrations in rural areas with low levels (less than 5 parts per billion by volume (ppbv)) and is therefore suitable for consideration as an FRM. For p-SO_4, CASAC generally supports the use of the CFP as a potential FRM for measuring p-SO_4 for an AAI-based secondary standard. The method has been relatively well-characterized and evaluated, and it has a documented, long-term track record of successful use in a field network designed to assess spatial patterns and long-term trends.

On supporting the photometric NO_y method as a potential FRM, CASAC concluded that the existing NO_y method is generally an appropriate approach for the indicator. However, CASAC agrees that additional characterization and research is needed to fully understand the method in order to designate it as a FRM. The EPA is now soliciting public comment on these methods as to their adequacy, suitability, and relative merits as FRMs for purposes of monitoring to determine compliance with an AAI-based secondary standard.

1. Potential FRMs for SO_2 and p-SO_4

The CFP is a combined, integrated sampling and analysis method based on the well-established measurement technology that has been used extensively in EPA's CASTNET monitoring network (see *http://www.epa.gov/castnet*). This method is in current use at over 80 monitoring sites and has been in use at not less than 40 sites for over 15 years. This method employs a relatively simple and inexpensive sampler and uses four 47-mm filters placed in an open-faced filter pack to simultaneously collect integrated filter samples for the SO_2 and p-SO_4 components. In addition, the CFP is also capable of the collection of t-NO_3, the sum of HNO_3 and p-NO_3.

The first stage of the filter pack assembly contains a Teflon® filter that collects p-SO_4^{2-} and p-NO_3, the second stage contains a nylon filter that collects SO_2 (as SO_4^{2-}) and HNO_3, and the third stage contains two cellulose fiber filters impregnated with potassium carbonate (K_2CO_3) that collect any remaining SO_2 (as SO_4^{2-}). The sampler collects 1-week integrated samples at a very low, controlled flow rate (1.5 or 3 L/min) in an attempt simulate actual deposition. Weekly averaged SO_2 and p-SO_4 concentrations could then be averaged over a 1-year period to calculate annual average values.

Upon sample completion, the species-specific filters are extracted, with subsequent analysis by the well-established and documented ion chromatographic (IC) analytical technique. During the IC analysis, an aliquot of a filter extract is injected into a stream of eluent (ion chromatography mobile phase, generally a millimolar-strength solution of carbonate-bicarbonate) and passed through a series of ion exchangers. The anions of interest are separated on the basis of their relative affinities for a low capacity and the strongly basic anion exchanger (guard and separator column). The separated anions are directed onto a cation exchanger (suppressor column) where they are converted to their highly conductive acid form, and the eluent is converted to a weakly conductive form. The now-separated anions, each in their acid form, are measured by conductivity. They are identified on the basis of retention time compared to that of standards and quantified by measurement of peak area compared to the peak areas of calibration standards.

Calibration and quality assurance for the method are applied to the sample filters, the analytical processes, and the flow rate measurement and control aspects of the sampler. Overall method performance is typically assessed with collocated samplers. These quality assurance techniques are routinely used and have proved adequate for other types of FRMs and equivalent methods in air monitoring network service.

The measurement and analytical procedures and past performance data associated with the CFP method are well documented and available through Quality Assurance Performance Plans (QAPPs), Standard Operating Procedures (SOPs) and annual reports (US EPA, 2010a and 2010b). The accumulated database on the CFP method is substantial and indicates that the method is sound, stable and has good reliability in routine, field operation. Data quality assessment results show the method to have good reproducibility, with collocated and analytical precision values in the range of 2 percent to 10 percent (excluding very low concentration measurements near the method detection limits; US EPA 2010b).

Data quality objectives (DQOs) for a new FRM would be based upon current DQOs being used for this method by EPA's OAP/CAMD and the NPS, the federal managers of CASTNET (US EPA, 2010a). In its current state, the CFP method is expected to meet or exceed (as past CASTNET data have indicated; US EPA, 2010b) the expected FRM DQOs, even when deployed in new monitoring networks outside of CASTNET. In addition, CASTNET samples have agreed favorably with other measures of SO_2 and p-SO_4 in comparison studies. For example, in direct comparison with an annular denuder sampler (ADS) method, CASTNET/ADS ratios for SO_2 and p-SO_4 were generally on the order of 0.9–1.1 (Lavery et al, 2009; Sickles et al, 1999; Sickles et al, 2008), thus illustrating the accuracy of the CFP method in the determination of long-term average SO_2 and p-SO_4 concentrations. The EPA believes that the CFP method would be fully adequate as an FRM in determining yearly average SO_2 and p-SO_4 concentrations for compliance determination purposes.

The EPA recognizes that an existing FRM for SO_2 has proven adequate for the purposes of monitoring compliance for the primary SO_2 NAAQS, specifically the newly-promulgated 1-hour standard. However, this FRM is better suited to the shorter-term, higher concentration primary and secondary SO_2 NAAQS, and there is substantial uncertainty as to the adequacy of this SO_2 FRM for monitoring the lower concentrations relevant to determining compliance with an AAI-based secondary standard. The performance specifications for SO_2 FRM analyzers (40 CFR Part 53, Table B–1) require a lower detectable limit (LDL) of 0.002

ppm for the standard measurement range and 0.001 ppm for the lower measurement range. These requirements correspond to mass per unit volume concentrations of 5.24 and 2.62 μg/m³, respectively. Analysis of 2009 CASTNET data shows that of the 84 CASTNET sampling sites, 63 measured annual average SO_2 concentrations below even the lower of these LDL requirements of 2.62 μg/m³ for the lower range SO_2 FRM (US EPA, 2010a). In addition, 11 of the 84 sites measured annual (2009) average SO_2 concentrations very near or below the manufacturers' reported detection limits for trace level UVF SO_2 monitors. Further, it is likely that the number of sites with annual average SO_2 concentration below both the SO_2 FRM LDL and the manufacturers reported detection limits will increase due to expected declines in mean SO_2 concentrations (US EPA, 2010b). For these reasons, EPA is considering the CFP method for use as the FRM for monitoring the SO_2 component of an ambient air indicator for oxides of sulfur, with a recommendation for additional study and data collection to evaluate further the possible applicability of the continuous UVF SO_2 FRM for this purpose.

2. Potential FRM for NO_y

Atmospheric concentrations of NO_y are measured continuously by an analyzer that photometrically measures the light intensity, at wavelengths greater than 600 nanometers (nm), resulting from the chemiluminescent reaction of ozone (O_3) with NO in sampled air. This method is very similar to the chemiluminescence NO/NO_2 analyzers widely used to collect NO_2 monitoring data for determining compliance with the NO_2 NAAQS. The various oxides of nitrogen species, excluding NO, are first quantitatively reduced to NO by means of a catalytic converter. These species include NO_2, HNO_2, PANs, HNO_3 and p-NO_3. The NO, which commonly exists in ambient air, passes through the converter unchanged, and, when combined with the NO resulting from the catalytic conversion of the other oxides of nitrogen, a measurement of the total NO_y concentration results. To maximize the conversion of the more chemically active oxides of nitrogen species, the converter is located externally, at or near the air sample inlet probe. This location minimizes losses of these active species that could otherwise occur from chemical reactions and wall losses in the sample inlet line.

The NO_y analyzer is a suitable, commercially produced continuous chemiluminescence analyzer that includes an ozone generator, a reaction cell, a photometric detector, wavelength filters as necessary to reduce sensitivity to wavelengths below 600 nanometer (nm), a pump and flow control system to draw atmospheric air through the converter and into the reaction cell, a suitable converter, a system to control the operation of the analyzer, and appropriate electronics to process and quantitatively scale the photometric signals. The converter contains a catalyst such as molybdenum and is heated to an optimum temperature designed to optimize the conversion of the various oxides of nitrogen to NO. It is connected to the analyzer via suitable lengths of Teflon® tubing. Hourly NO_y measurements obtained by the analyzer would be averaged over the same 7-day period used by the CFP method to measure the SO_2 and p-SO_4 components, with further averaging over a 1-year period.

Commercial NO_y analyzers are currently available, and the analyzers have been used for a variety of monitoring applications. During the 2006 TexAQS Radical and Aerosol Measurement Project (TRAMP), Luke et al., 2010, compared measured NO_y concentrations obtained with an NO_y instrument based upon the above mentioned methodology with the sum of measured individual NO_y species (*i.e.,* NOy*i* = $NO+NO_2+HNO_3+PANs+HNO_2+p\text{-}NO_3$). This comparison yielded excellent overall agreement during both day ([NOy](ppb) = [NOy*i*](ppb) $\times 1.03 - 0.42$; $r^2 = 0.9933$) and night time ([NOy](ppb) = [NOy*i*](ppb) $\times 1.01 - 0.18$; $r^2 = 0.9975$) periods (Luke *et al,* 2010). The results of this study show that this NO_y method is capable of the accurate determination of all the atmospherically relevant NO_y components, resulting in an accurate determination of total NO_y concentrations. The NO_y instruments have been routinely operated in networks such as SouthEastern Aerosol Research and Characterization (SEARCH), dating back several years. In addition, state monitoring agencies across the U.S. have begun, starting in 2009, the routine operation of commercially available NO_y instrumentation in anticipation of EPA's NCore network transitioning to full operation in 2011.

These initial assessments described above are promising and indicate that the photometric NO_y method appears to be accurate, reliable, and capable of routine network operation. As a result, the method is most likely capable for use as an FRM for determining atmospheric NO_y concentrations as a component in determining compliance with an AAI-based secondary standard. However, as described below, this continuous method for NO_y requires additional time for further evaluation before it can be fully confirmed for adoption as a FRM. The EPA has identified measurement uncertainties and some remaining science questions associated with this method. Among these are: (a) The ability of the method to capture all components of NO_y relevant to nitrogen deposition, (b) the efficiency of the molybdenum converter in converting all oxides of nitrogen to NO for detection (excluding NO_2, as this conversion is already well documented), (c) appropriate inlet height specifications to minimize any bias associated with vertical concentration gradients of key NO_y components, (d) identification and quantification of potential measurement interferences in the NO_y determination, and (e) development and demonstration of effective calibration/challenge procedures to best represent the various mixtures of NO_y components that are expected to be present in the different air sheds across the U.S.

To address these NO_y method uncertainties and to fully assess this method for use as the NO_y FRM, EPA has developed a detailed research plan (Russell and Samet, 2011b) which was presented to the CASAC AMMS on February 16, 2011. In response, CASAC recognized the need for, and supported the general outline of EPA's research plan to evaluate the NO_y method for potential designation as an FRM (US EPA, 2011). In addition, the CASAC AMMS suggested additional areas of research associated with the photometric NO_y method that warrant further assessment prior to final designation of the method as the NO_y FRM. These include operation of the method during extremely low temperature conditions to investigate possible condensation in sample lines, method detection limits relative to low levels expected in remote areas, and ambient-based method evaluations in various air sheds across the U.S. In response to these CASAC AMMS suggestions, EPA is carrying out studies, in addition to the tasks outlined in the research plan, for the NO_y method. The results of these studies will likely take a year or more to become available. As noted previously, EPA anticipates that these results will be favorable and will confirm the adequacy of the NO_y method as a suitable FRM for determining compliance with an AAI-based secondary standard.

V. Statutory and Executive Order Reviews

A. Executive Order 12866: Regulatory Planning and Review and Review and Executive Order 13563: Improving Regulation and Regulatory Review

Under Executive Order 12866 (58 FR 51735, October 4, 1993), this action is a ''significant regulatory action.'' Accordingly, EPA submitted this action to the Office of Management and Budget (OMB) for review under Executive Orders 12866 and 13563 (76 FR 3821, January 21, 2011), and any changes made in response to OMB recommendations have been documented in the docket for this action.

B. Paperwork Reduction Act

This action does not impose an information collection burden under the provisions of the Paperwork Reduction Act, 44 U.S.C. 3501 *et seq.* Burden is defined at 5 CFR 1320.3(b). There are no information collection requirements directly associated with the establishment of a NAAQS under section 109 of the CAA.

C. Regulatory Flexibility Act

For purposes of assessing the impacts of today's rule on small entities, small entity is defined as: (1) A small business that is a small industrial entity as defined by the Small Business Administration's (SBA) regulations at 13 CFR 121.201; (2) a small governmental jurisdiction that is a government of a city, county, town, school district or special district with a population of less than 50,000; and (3) a small organization that is any not-for-profit enterprise which is independently owned and operated and is not dominant in its field.

After considering the economic impacts of today's proposed rule on small entities, I certify that this action will not have a significant economic impact on a substantial number of small entities. This proposed rule will not impose any requirements on small entities. Rather, this rule establishes national standards for allowable concentrations of oxides of nitrogen and sulfur in ambient air as required by section 109 of the CAA. See also American Trucking Associations v. EPA. 175 F. 3d at 1044–45 (NAAQS do not have significant impacts upon small entities because NAAQS themselves impose no regulations upon small entities). We continue to be interested in the potential impacts of the proposed rule on small entities and welcome comments on issues related to such impacts.

D. Unfunded Mandates Reform Act

Title II of the Unfunded Mandates Reform Act of 1995 (UMRA), Public Law 104–4, establishes requirements for Federal agencies to assess the effects of their regulatory actions on State, local, and Tribal governments and the private sector. Under section 202 of the UMRA, EPA generally must prepare a written statement, including a cost-benefit analysis, for proposed and final rules with ''Federal mandates'' that may result in expenditures to state, local, and tribal governments, in the aggregate, or to the private sector, of $100 million or more in any 1 year. Before promulgating an EPA rule for which a written statement is needed, section 205 of the UMRA generally requires EPA to identify and consider a reasonable number of regulatory alternatives and to adopt the least costly, most cost-effective or least burdensome alternative that achieves the objectives of the rule. The provisions of section 205 do not apply when they are inconsistent with applicable law. Moreover, section 205 allows EPA to adopt an alternative other than the least costly, most cost-effective or least burdensome alternative if the Administrator publishes with the final rule an explanation why that alternative was not adopted. Before EPA establishes any regulatory requirements that may significantly or uniquely affect small governments, including tribal governments, it must have developed under section 203 of the UMRA a small government agency plan. The plan must provide for notifying potentially affected small governments, enabling officials of affected small governments to have meaningful and timely input in the development of EPA regulatory proposals with significant Federal intergovernmental mandates, and informing, educating, and advising small governments on compliance with the regulatory requirements.

This action contains no Federal mandates under the provisions of Title II of the Unfunded Mandates Reform Act of 1995 (UMRA), 2 U.S.C. 1531–1538 for state, local, or tribal governments or the private sector. Therefore, this action is not subject to the requirements of sections 202 or 205. Furthermore, as indicated previously, in setting a NAAQS EPA cannot consider the economic or technological feasibility of attaining ambient air quality standards; although such factors may be considered to a degree in the development of state plans to implement the standards. See also *American Trucking Associations* v. *EPA,* 175 F. 3d at 1043 (noting that because EPA is precluded from considering costs of implementation in establishing NAAQS, preparation of a Regulatory Impact Analysis pursuant to the Unfunded Mandates Reform Act would not furnish any information which the court could consider in reviewing the NAAQS). Accordingly, EPA has determined that the provisions of sections 202, 203, and 205 of the UMRA do not apply to this proposed decision. The EPA acknowledges, however, that any corresponding revisions to associated state implementation plan (SIP) requirements and air quality surveillance requirements, 40 CFR part 51 and 40 CFR part 58, respectively, might result in such effects. Accordingly, EPA will address, as appropriate, unfunded mandates if and when it proposes any revisions to 40 CFR parts 51 or 58.

E. Executive Order 13132: Federalism

This proposed rule does not have federalism implications. It will not have substantial direct effects on the states, on the relationship between the national government and the states, or on the distribution of power and responsibilities among the various levels of government, as specified in Executive Order 13132 because it does not contain legally binding requirements. Thus, the requirements of Executive Order 13132 do not apply to this rule.

EPA believes, however, that this proposed rule may be of significant interest to state governments. As also noted in section E (above) on UMRA, EPA recognizes that states will have a substantial interest in this rule and any corresponding revisions to associated SIP requirements and air quality surveillance requirements, 40 CFR part 51 and 40 CFR part 58, respectively. Therefore, in the spirit of Executive Order 13132 and consistent with EPA policy to promote communications between EPA and state and local governments, EPA specifically solicits comment on this proposed rule from state and local officials.

F. Executive Order 13175: Consultation and Coordination With Indian Tribal Governments

Executive Order 13175, entitled ''Consultation and Coordination with Indian Tribal Governments'' (65 FR 67249, November 9, 2000), requires EPA to develop an accountable process to ensure ''meaningful and timely input by tribal officials in the development of regulatory policies that have tribal implications.'' This rule concerns the establishment of national standards to address the public welfare effects of oxides of nitrogen and sulfur.

This action does not have Tribal implications, as specified in Executive Order 13175 (65 FR 67249, November 9, 2000). It does not have a substantial direct effect on one or more Indian tribes, since tribes are not obligated to adopt or implement any NAAQS. Thus, Executive Order 13175 does not apply to this rule.

G. Executive Order 13045: Protection of Children from Environmental Health & Safety Risks

This action is not subject to EO 13045 because it is not an economically significant rule as defined in EO 12866.

H. Executive Order 13211: Actions that Significantly Affect Energy Supply, Distribution or Use

This action is not a ''significant energy action'' as defined in Executive Order 13211 (66 FR 28355, May 22, 2001), because it is not likely to have a significant adverse effect on the supply, distribution, or use of energy. This action concerns the establishment of national standards to address the public welfare effects of oxides of nitrogen and sulfur. This action does not prescribe specific pollution control strategies by which these ambient standards will be met. Such strategies will be developed by states on a case-by-case basis, and EPA cannot predict whether the control options selected by states will include regulations on energy suppliers, distributors, or users.

I. National Technology Transfer and Advancement Act

Section 12(d) of the National Technology Transfer and Advancement Act of 1995 (NTTAA), Public Law 104–113, 12(d) (15 U.S.C. 272 note) directs EPA to use voluntary consensus standards in its regulatory activities unless to do so would be inconsistent with applicable law or otherwise impractical. Voluntary consensus standards are technical standards (*e.g.,* materials specifications, test methods, sampling procedures, and business practices) that are developed or adopted by voluntary consensus standards bodies. The NTTAA directs EPA to provide Congress, through OMB, explanations when the Agency decides not to use available and applicable voluntary consensus standards.

The EPA is not aware of any voluntary consensus standards that are relevant to the provisions of this proposed rule. The EPA welcomes any feedback on such standards that may be applicable.

J. Executive Order 12898: Federal Actions To Address Environmental Justice in Minority Populations and Low-Income Populations

Executive Order 12898 (59 FR 7629 (Feb. 16, 1994)) establishes federal executive policy on environmental justice. Its main provision directs federal agencies, to the greatest extent practicable and permitted by law, to make environmental justice part of their mission by identifying and addressing, as appropriate, disproportionately high and adverse human health or environmental effects of their programs, policies, and activities on minority populations and low-income populations in the United States.

EPA has determined that this proposed rule will not have disproportionately high and adverse human health or environmental effects on minority or low-income populations because it retains the level of environmental protection for all affected populations without having any disproportionately high and adverse human health or environmental effects on any population, including any minority or low-income population.

References

Baker JP; Bernard DP; Christensen SW; Sale MJ. 1990. Biological effects of changes in surface water acid-base chemistry. (State of science/technology report #13). Washington DC: National Acid Precipitation Assessment Program (NAPAP).

Bulger AJ; Cosby BJ; Webb JR. 2000. Current, reconstructed past, and projected future status of brook trout (Salvelinus fontinalis) streams in Virginia. Can J Fish Aquat Sci, 57, 1515–1523.

Banzhaf, S., D. Burtraw, D. Evans, and A. Krupnick. 2006. ''Valuation of Natural Resource Improvements in the Adirondacks.'' *Land Economics* 82:445–464.

Lavery, T.F. C.M. Rogers, R. Baumgardner, and K.P. Mishoe. 2009. Intercomparison of Clean Air Status and Trends Network Nitrate and Nitric Acid Measurements with Data from Other Monitoring Programs. J. Air & Waste Manage. Assoc., 59, 214–226.

Lien L; Raddum GG; Fjellheim A. 1992. Critical loads for surface waters: invertebrates and fish. (Acid rain research report no 21). Oslo, Norway: Norwegian Institute for Water Research.

Luke, W.T., P.K. Barry, L. Lefer, J. Flynn, B. Rappenglück, M. Leuchner, J.E. Dibb, L.D. Ziemba, C.H. Anderson, and M. Buhr. 2010. Measurements of primary trace gases and NO_Y composition in Houston, Texas. Atmospheric Environment, 44, 4068–4080.

MacAvoy SW; Bulger AJ. 1995. Survival of brook trout (Salvelinus fontinalis) embryos and fry in streams of different acid sensitivity in Shenandoah National Park, USA. Water Air Soil Pollut, 85, 445–450.

McNulty SG; Cohen EC; Myers JAM; Sullivan TJ; Li H. 2007. Estimates of critical acid loads and exceedances for forest soils across the conterminous United States. Environ Pollut, 149, 281–292.

NAPAP. 1990. Acid Deposition: State of Science and Technology. National Acid Precipitation Assessment Program. Office of the Director, Washington, DC.

NAPAP. (2005). National acid precipitation assessment program report to Congress: An integrated assessment. *http://www.esrl.noaa.gov/csd/aqrs/reports/napapreport05.pdf.* Silver Spring, MD: National Acid Precipitation Assessment Program (NAPAP); Committee on Environment and Natural Resources (CENR) of the National Science and Technology Council (NSTC).

NRC (National Research Council). 2004. Air quality management in the United States. Washington, DC: National Research Council (NRC); The National Academies Press.

Russell, A and J. M. Samet, 2010a. Review of the Policy Assessment for the Review of the Secondary National Ambient Air Quality Standard for NO_X and SO_X: First Draft. EPA–CASAC–10–014.

Russell, A and J. M. Samet, 2010b. Review of the Policy Assessment for the Review of the Secondary National Ambient Air Quality Standard for NO_X and SO_X: Second Draft. EPA–CASAC–11–003.

Russell, A and J. M. Samet, 2011. Review of the Policy Assessment for the Review of the Secondary National Ambient Air Quality Standard for NO_X and SO_X: FINAL. EPA–CASAC–11–005.

Russell and Samet, 2011b Review of EPA Draft Documents on Monitoring and Methods for Oxides of Nitrogen (NO_X) and Sulfur (SO_X) *http://yosemite.epa.gov/sab/sabpeople.nsf/WebCommittees/CASAC.*

Sickles II, J.E., L. L. Hodson, and L. M. Vorburger. 1999. Evaluation of the filter pack for long-duration sampling of ambient air. Atmospheric Environment, 33, 2187–2202.

Sickles II, J.E. and D.S. Shadwick. 2008. Comparison of particulate sulfate and nitrate at collocated CASTNET and IMPROVE sites in the eastern US. Atmospheric Environment, 42, 2062–2073.

Smyth SC, W. Jiang, and H. Roth. 2008. A comparative performance evaluation of the AURAMS and CMAQ air quality modeling systems. Atmos Envir 43:1059–1070.

Stoddard J; Kahl JS; Deviney FA; DeWalle DR; Driscoll CT; Herlihy AT; Kellogg JH; Murdoch PS; Webb JR; Webster KE. (2003). Response of surface water chemistry to the Clean Air Act Amendments of 1990 (No. EPA 620/R–03/001). Research Triangle Park, NC; National Health and Environmental Effects Research Laboratory; Office of Research and Development; U.S. Environmental Protection Agency.

Sullivan TJ; Driscoll CT; Cosby BJ; Fernandez IJ; Herlihy AT; Zhai J; Stemberger R; Snyder KU; Sutherland JW; Nierzwicki-Bauer SA; Boylen CW; McDonnell TC; Nowicki NA. 2006. Assessment of the extent to which intensively studied lakes are representative of the Adirondack Mountain region. (Final Report no 06–17).Corvallis, OR; prepared by Environmental Chemistry, Inc. for: Albany, NY; Environmental Monitoring Evaluation and Protection Program of the New York State Energy Research and Development Authority (NYSERDA).

US EPA, 1973. ''Effects of Sulfur Oxide in the Atmosphere on Vegetation''. Revised Chapter 5 of Air Quality Criteria For Sulfur Oxides. U.S. Environmental Protection Agency. Research Triangle Park, N.C. EPA–R3–73–030.

US EPA. 1982. Review of the National Ambient Air Quality Standards for Sulfur Oxides: Assessment of Scientific and Technical Information. OAQPS Staff Paper. EPA–450/5–82–007. U.S. Environmental Protection Agency, Office of Air Quality Planning and Standards, Research Triangle Park, NC.

US EPA, 1984a. The Acidic Deposition Phenomenon and Its Effects: Critical Assessment Review Papers. Volume I Atmospheric Sciences. EPA–600/8–83–016AF. Office of Research and Development, Washington, DC.

US EPA, 1984b. The Acidic Deposition Phenomenon and Its Effects: Critical Assessment Review Papers. Volume II Effects Sciences. EPA–600/8–83–016BF. Office of Research and Development, Washington, DC.

US EPA, 1985. The Acidic Deposition Phenomenon and Its Effects: Critical Assessment Document. EPA–600/8–85/001. Office of Research and Development, Washington, DC.

US EPA. 1995a. Review of the National Ambient Air Quality Standards for Nitrogen Dioxide: Assessment of Scientific and Technical Information. OAQPS Staff Paper. EPA–452/R–95–005. U.S. Environmental Protection Agency, Office of Air Quality Planning and Standards, Research Triangle Park, NC. September.

US EPA. 1995b. Acid Deposition Standard Feasibility Study Report to Congress. U.S. Environmental Protection Agency, Washington, DC. EPA–430/R–95–001a.

US EPA 2007. Integrated Review Plan for the Secondary National Ambient Air Quality Standards for Nitrogen Dioxide and Sulfur Dioxide. U.S. Environmental Protection Agency, Research Triangle Park, NC, EPA–452/R–08–006.

US EPA 2008. Integrated Science Assessment (ISA) for Oxides of Nitrogen and Sulfur Ecological Criteria (Final Report). U.S. Environmental Protection Agency, Washington, D.C., EPA/600/R–08/082F, 2008.

US EPA 2009. Risk and Exposure Assessment for Review of the Secondary National Ambient Air Quality Standards for Oxides of Nitrogen and Oxides of Sulfur-Main Content—Final Report. U.S. Environmental Protection Agency, Washington, D.C., EPA–452/R–09–008a.

US EPA, 2010a. CASTNET Quality Assurance Project Plan, Revision 7.0, October 2010, *http://java.epa.gov/castnet/.*

US EPA, 2010b. CASTNET Annual Reports, 2004–2009, *http://java.epa.gov/castnet/.*

US EPA 2011. Policy Assessment for the Review of the Secondary National Ambient Air Quality Standards for Oxides of Nitrogen and Oxides of Sulfur. U.S. Environmental Protection Agency, Washington, DC, EPA–452/R–11–005a.

US EPA, 2011b. Federal Reference Methods for NO_y and p-SO4 for the New Combined NO_X and SO_x Secondary NAAQS Research Plan, EPA/600/1–11/002 January 20, 2011.

Wolff, G. T. 1993. CASAC closure letter for the 1993 Criteria Document for Oxides of Nitrogen addressed to U.S. EPA Administrator Carol M. Browner dated September 30, 1993.

Wolff, G. T. 1995. CASAC closure letter for the 1995 OAQPS Staff Paper addressed to U.S. EPA Administrator Carol M. Browner dated August 22, 1995.

List of Subjects in 40 CFR Part 50

Environmental protection, Air pollution control, Carbon monoxide, Lead, Nitrogen dioxide, Ozone, Particulate matter, Sulfur oxides.

Dated: July 12, 2011.

Lisa P. Jackson,

Administrator.

For the reasons set forth in the preamble, part 50 of chapter 1 of title 40 of the code of Federal regulations is proposed to be amended as follows:

PART 50—NATIONAL PRIMARY AND SECONDARY AMBIENT AIR QUALITY STANDARDS

1. The authority citation for part 50 continues to read as follows:

Authority: 42 U.S.C. 7401, *et seq.*

2. Section 50.5 is amended by revising paragraphs (b) and (c) and by adding paragraphs (d) and (e) to read as follows:

§ 50.5 National secondary ambient air quality standards for sulfur oxides (sulfur dioxide).

* * * * *

(b) The level of the national secondary 1-hour ambient air quality standard for oxides of sulfur is 75 parts per billion (ppb, which is 1 part in 1,000,000,000), measured in the ambient air as sulfur dioxide (SO_2).

(c) The levels of the standards shall be measured by a reference method based on Appendix A–1 or A–2 of this part, or by a Federal Equivalent Method (FEM) designated in accordance with part 53 of this chapter.

(d) To demonstrate attainment with the 3-hour secondary standard, the second-highest 3-hour average must be based upon hourly data that are at least 75 percent complete in each calendar quarter. A 3-hour block average shall be considered valid only if all three hourly averages for the 3-hour period are available. If only one or two hourly averages are available, but the 3-hour average would exceed the level of the standard when zeros are substituted for the missing values, subject to the rounding rule of paragraph (a) of this section, then this shall be considered a valid 3-hour average. In all cases, the 3-hour block average shall be computed as the sum of the hourly averages divided by 3.

(e) The 1-hour secondary standard is met at an ambient air quality monitoring site when the three-year average of the annual 99th percentile of the daily maximum 1-hour average concentrations is less than or equal to 75 ppb, as determined in accordance with Appendix T of this part.

3. Section 50.11 is revised to read as follows:

§ 50.11 National primary and secondary ambient air quality standards for oxides of nitrogen (with nitrogen dioxide as the indicator).

(a) The level of the national primary and secondary annual ambient air quality standards for oxides of nitrogen is 53 parts per billion (ppb, which is 1 part in 1,000,000,000), annual average concentration, measured in the ambient air as nitrogen dioxide.

(b) The level of the national primary and secondary 1-hour ambient air quality standards for oxides of nitrogen is 100 ppb, 1-hour average concentration, measured in the ambient air as nitrogen dioxide.

(c) The levels of the standards shall be measured by:

(1) A reference method based on appendix F to this part; or

(2) A Federal equivalent method (FEM) designated in accordance with part 53 of this chapter.

(d) The annual primary and secondary standards are met when the annual average concentration in a calendar year is less than or equal to 53 ppb, as determined in accordance with Appendix S of this part for the annual standard.

(e) The 1-hour primary and secondary standards are met when the three-year average of the annual 98th percentile of the daily maximum 1-hour average concentration is less than or equal to 100 ppb, as determined in accordance with Appendix S of this part for the 1-hour standard.

4. Appendix S is amended as follows:

a. by revising paragraph 1.(a),

b. by revising the definition of ''Design values'' under paragraph 1.(c),

c. by revising paragraph 2.(b),

d. by revising paragraphs 3.1(a) through (d),

e. by revising paragraphs 3.2(a) through (e),

f. by revising paragraph 4.1(b),

g. by revising paragraph 4.2(c),

h. by revising paragraph 5.1(b), and

i. by revising paragraph 5.2(b) to read as follows:

Appendix S to Part 50—Interpretation of the Primary and Secondary National Ambient Air Quality Standards for Oxides of Nitrogen (Nitrogen Dioxide)

1. General.

(a) This appendix explains the data handling conventions and computations necessary for determining when the primary and secondary national ambient air quality standards for oxides of nitrogen as measured by nitrogen dioxide (''NO_2 NAAQS'') specified in § 50.11 are met. Nitrogen dioxide (NO_2) is measured in the ambient air by a Federal reference method (FRM) based on appendix F to this part or by a Federal equivalent method (FEM) designated in accordance with part 53 of this chapter. Data handling and computation procedures to be used in making comparisons between reported NO_2 concentrations and the levels of the NO_2 NAAQS are specified in the following sections.

* * * * *

(c) * * *

Design values are the metrics (*i.e.,* statistics) that are compared to the NAAQS levels to determine compliance, calculated as specified in section 5 of this appendix. The design values for the primary and secondary NAAQS are:

(1) The annual mean value for a monitoring site for one year (referred to as the ''annual primary or secondary standard design value'').

(2) The 3-year average of annual 98th percentile daily maximum 1-hour values for a monitoring site (referred to as the ''1-hour primary or secondary standard design value'').

* * * * *

2. Requirements for Data Used for Comparisons With the NO_2 NAAQS and Data Reporting Considerations.

* * * * *

(b) When two or more NO_2 monitors are operated at a site, the state may in advance designate one of them as the primary monitor. If the state has not made this designation, the Administrator will make the designation, either in advance or retrospectively. Design values will be developed using only the data from the primary monitor, if this results in a valid design value. If data from the primary monitor do not allow the development of a valid design value, data solely from the other monitor(s) will be used in turn to develop a valid design value, if this results in a valid design value. If there are three or more monitors, the order for such comparison of the other monitors will be determined by the Administrator. The Administrator may combine data from different monitors in different years for the purpose of developing a valid 1-hour primary or secondary standard design value, if a valid design value cannot be developed solely with the data from a single monitor. However, data from two or more monitors in the same year at the same site will not be combined in an attempt to meet data completeness requirements, except if one monitor has physically replaced another instrument permanently, in which case the two instruments will be considered to be the same monitor, or if the state has switched the designation of the primary monitor from one instrument to another during the year.

* * * * *

3. Comparisons with the NO_2 NAAQS.

3.1 The Annual Primary and Secondary NO_2 NAAQS.

(a) The annual primary and secondary NO_2 NAAQS are met at a site when the valid annual primary standard design value is less than or equal to 53 parts per billion (ppb).

(b) An annual primary or secondary standard design value is valid when at least 75 percent of the hours in the year are reported.

(c) An annual primary or secondary standard design value based on data that do not meet the completeness criteria stated in section 3.1(b) may also be considered valid with the approval of, or at the initiative of, the Administrator, who may consider factors such as monitoring site closures/moves, monitoring diligence, the consistency and levels of the valid concentration measurements that are available, and nearby concentrations in determining whether to use such data.

(d) The procedures for calculating the annual primary and secondary standard design values are given in section 5.1 of this appendix.

3.2 The 1-Hour Primary and Secondary NO_2 NAAQS.

(a) The 1-hour primary or secondary NO_2 NAAQS is met at a site when the valid 1-hour primary or secondary standard design value is less than or equal to 100 parts per billion (ppb).

(b) An NO_2 1-hour primary or secondary standard design value is valid if it encompasses three consecutive calendar years of complete data. A year meets data completeness requirements when all 4 quarters are complete. A quarter is complete when at least 75 percent of the sampling days for each quarter have complete data. A sampling day has complete data if 75 percent of the hourly concentration values, including state-flagged data affected by exceptional events which have been approved for exclusion by the Administrator, are reported.

(c) In the case of one, two, or three years that do not meet the completeness requirements of section 3.2(b) of this appendix and thus would normally not be useable for the calculation of a valid 3-year 1-hour primary or secondary standard design value, the 3-year 1-hour primary or secondary standard design value shall nevertheless be considered valid if one of the following conditions is true.

(i) At least 75 percent of the days in each quarter of each of three consecutive years have at least one reported hourly value, and the design value calculated according to the procedures specified in section 5.2 is above the level of the primary or secondary 1-hour standard.

(ii) (A) A 1-hour primary or secondary standard design value that is below the level of the NAAQS can be validated if the substitution test in section 3.2(c)(ii)(B) results in a ''test design value'' that is below the level of the NAAQS. The test substitutes actual ''high'' reported daily maximum 1-hour values from the same site at about the same time of the year (specifically, in the same calendar quarter) for unknown values that were not successfully measured. Note that the test is merely diagnostic in nature, intended to confirm that there is a very high likelihood that the original design value (the one with less than 75 percent data capture of hours by day and of days by quarter) reflects the true under-NAAQS-level status for that 3-year period; the result of this data substitution test (the ''test design value'', as defined in section 3.2(c)(ii)(B)) is not considered the actual design value. For this test, substitution is permitted only if there are at least 200 days across the three matching quarters of the three years under consideration (which is about 75 percent of all possible daily values in those three quarters) for which 75 percent of the hours in the day, including state-flagged data affected by exceptional events which have been approved for exclusion by the Administrator, have reported concentrations. However, maximum 1-hour values from days with less than 75 percent of the hours reported shall also be considered in identifying the high value to be used for substitution.

(B) The substitution test is as follows: Data substitution will be performed in all quarter periods that have less than 75 percent data capture but at least 50 percent data capture, including state-flagged data affected by exceptional events which have been approved for exclusion by the Administrator; if any quarter has less than 50 percent data capture then this substitution test cannot be used. Identify for each quarter (*e.g.,* January–March) the highest reported daily maximum 1-hour value for that quarter, excluding state-flagged data affected by exceptional events which have been approved for exclusion by the Administrator, looking across those three months of all three years under consideration. All daily maximum 1-hour values from all days in the quarter period shall be considered when identifying this highest value, including days with less than 75 percent data capture. If after substituting the highest non-excluded reported daily maximum 1-hour value for a quarter for as much of the missing daily data in the matching deficient quarter(s) as is needed to make them 100 percent complete, the procedure in section 5.2 yields a recalculated 3-year 1-hour standard ''test design value'' below the level of the standard, then the 1-hour primary or secondary standard design value is deemed to have passed the diagnostic test and is valid, and the level of the standard is deemed to have been met in that 3-year period. As noted in section 3.2(c)(i), in such a case, the 3-year design value based on the data actually reported, not the ''test design value'', shall be used as the valid design value. (iii) (A) A 1-hour primary or secondary standard design value that is above the level of the NAAQS can be validated if the substitution test in section 3.2(c)(iii)(B) results in a ''test design value'' that is above the level of the NAAQS. The test substitutes actual ''low'' reported daily maximum 1-hour values from the same site at about the same time of the year (specifically, in the same three months of the

calendar) for unknown values that were not successfully measured. Note that the test is merely diagnostic in nature, intended to confirm that there is a very high likelihood that the original design value (the one with less than 75 percent data capture of hours by day and of days by quarter) reflects the true above-NAAQS-level status for that 3-year period; the result of this data substitution test (the ''test design value'', as defined in section 3.2(c)(iii)(B)) is not considered the actual design value. For this test, substitution is permitted only if there are a minimum number of available daily data points from which to identify the low quarter-specific daily maximum 1-hour values, specifically if there are at least 200 days across the three matching quarters of the three years under consideration (which is about 75 percent of all possible daily values in those three quarters) for which 75 percent of the hours in the day have reported concentrations. Only days with at least 75 percent of the hours reported shall be considered in identifying the low value to be used for substitution.

(B) The substitution test is as follows: Data substitution will be performed in all quarter periods that have less than 75 percent data capture. Identify for each quarter (*e.g.,* January–March) the lowest reported daily maximum 1-hour value for that quarter, looking across those three months of all three years under consideration. All daily maximum 1-hour values from all days with at least 75 percent capture in the quarter period shall be considered when identifying this lowest value. If after substituting the lowest reported daily maximum 1-hour value for a quarter for as much of the missing daily data in the matching deficient quarter(s) as is needed to make them 75 percent complete, the procedure in section 5.2 yields a recalculated 3-year 1-hour standard ''test design value'' above the level of the standard, then the 1-hour primary or secondary standard design value is deemed to have passed the diagnostic test and is valid, and the level of the standard is deemed to have been exceeded in that 3-year period. As noted in section 3.2(c)(i), in such a case, the 3-year design value based on the data actually reported, not the ''test design value'', shall be used as the valid design value.

(d) A 1-hour primary or secondary standard design value based on data that do not meet the completeness criteria stated in 3.2(b) and also do not satisfy section 3.2(c), may also be considered valid with the approval of, or at the initiative of, the Administrator, who may consider factors such as monitoring site closures/moves, monitoring diligence, the consistency and levels of the valid concentration measurements that are available, and nearby concentrations in determining whether to use such data.

(e) The procedures for calculating the 1-hour primary and secondary standard design values are given in section 5.2 of this appendix.

4. Rounding Conventions.

4.1 Rounding Conventions for the Annual Primary and Secondary NO_2 NAAQS.

* * * * *

(b) The annual primary or secondary standard design value is calculated pursuant to section 5.1 and then rounded to the nearest whole number or 1 ppb (decimals 0.5 and greater are rounded up to the nearest whole number, and any decimal lower than 0.5 is rounded down to the nearest whole number).

4.2 Rounding Conventions for the 1-hour Primary and Secondary NO_2 NAAQS.

* * * * *

(c) The 1-hour primary or secondary standard design value is calculated pursuant to section 5.2 and then rounded to the nearest whole number or 1 ppb (decimals 0.5 and greater are rounded up to the nearest whole number, and any decimal lower than 0.5 is rounded down to the nearest whole number).

5. Calculation Procedures for the Primary and Secondary NO_2 NAAQS.

5.1 Procedures for the Annual Primary and Secondary NO_2 NAAQS.

* * * * *

(b) The annual primary or secondary standard design value for a site is the valid annual mean rounded according to the conventions in section 4.1.

5.2 Calculation Procedures for the 1-hour Primary and Secondary NO_2 NAAQS.

* * * * *

(b) The 1-hour primary or secondary standard design value for a site is the mean of the three annual 98th percentile values, rounded according to the conventions in section 4.

* * * * *

5. Appendix T is amended as follows:

a. by revising paragraph 1.(a),

b. by revising the definition of ''Design values'' under paragraph 1.(c),

c. by revising paragraph 2.(b),

d. by revising paragraphs 3.(a) through (e),

e. by revising paragraph 4.(c), and

f. by revising paragraph 5.(b) to read as follows:

Appendix T to Part 50—Interpretation of the Primary and Secondary National Ambient Air Quality Standards for Oxides of Sulfur (Sulfur Dioxide)

1. General.

(a) This appendix explains the data handling conventions and computations necessary for determining when the primary and secondary national ambient air quality standards for Oxides of Sulfur as measured by Sulfur Dioxide (''SO_2 NAAQS'') specified in § 50.17 and § 50.5 (b), respectively, are met at an ambient air quality monitoring site. Sulfur dioxide (SO_2) is measured in the ambient air by a Federal reference method (FRM) based on appendix A–1 or A–2 to this part or by a Federal equivalent method (FEM) designated in accordance with part 53 of this chapter. Data handling and computation procedures to be used in making comparisons between reported SO_2 concentrations and the levels of the SO_2 NAAQS are specified in the following sections.

* * * * *

(c) * * *

Design values are the metrics (*i.e.,* statistics) that are compared to the NAAQS levels to determine compliance, calculated as specified in section 5 of this appendix. The design value for the primary and secondary 1-hour NAAQS is the 3-year average of annual 99th percentile daily maximum 1-hour values for a monitoring site (referred to as the ''1-hour primary standard design value'').

* * * * *

2. Requirements for Data Used for Comparisons With the SO_2 NAAQS and Data Reporting Considerations.

* * * * *

(b) Data from two or more monitors from the same year at the same site reported to EPA under distinct Pollutant Occurrence Codes shall not be combined in an attempt to meet data completeness requirements. The Administrator will combine annual 99th percentile daily maximum concentration values from different monitors in different years, selected as described here, for the purpose of developing a valid 1-hour primary or secondary standard design value. If more than one of the monitors meets the completeness requirement for all four quarters of a year, the steps specified in section 5(a) of this appendix shall be applied to the data from the monitor with the highest average of the four quarterly completeness values to derive a valid annual 99th percentile daily maximum concentration. If no monitor is complete for all four quarters in a year, the steps specified in section 3(c) and 5(a) of this appendix shall be applied to the data from the monitor with the highest average of the four quarterly completeness values in an attempt to derive a valid annual 99th percentile daily maximum concentration. This paragraph does not prohibit a monitoring agency from making a local designation of one physical monitor as the primary monitor for a Pollutant Occurrence Code and substituting the 1-hour data from a second physical monitor whenever a valid concentration value is not obtained from the primary monitor; if a monitoring agency substitutes data in this manner, each substituted value must be accompanied by an AQS qualifier code indicating that substitution with a value from a second physical monitor has taken place.

* * * * *

3. Comparisons with the 1-hour Primary and Secondary SO_2 NAAQS.

(a) The 1-hour primary or secondary SO_2 NAAQS is met at an ambient air quality monitoring site when the valid 1-hour primary or secondary standard design value is less than or equal to 75 parts per billion (ppb).

(b) An SO_2 1-hour primary or secondary standard design value is valid if it encompasses three consecutive calendar years of complete data. A year meets data completeness requirements when all 4 quarters are complete. A quarter is complete when at least 75 percent of the sampling days for each quarter have complete data. A sampling day has complete data if 75 percent of the hourly concentration values, including State-flagged data affected by exceptional events which have been approved for exclusion by the Administrator, are reported.

(c) In the case of one, two, or three years that do not meet the completeness requirements of section 3(b) of this appendix and thus would normally not be useable for the calculation of a valid 3-year 1-hour primary or secondary standard design value, the 3-year 1-hour primary or secondary standard design value shall nevertheless be considered valid if one of the following conditions is true.

(i) At least 75 percent of the days in each quarter of each of three consecutive years have at least one reported hourly value, and the design value calculated according to the procedures specified in section 5 is above the level of the primary or secondary 1-hour standard.

(ii) (A) A 1-hour primary or secondary standard design value that is equal to or below the level of the NAAQS can be validated if the substitution test in section 3(c)(ii)(B) results in a ''test design value'' that is below the level of the NAAQS. The test substitutes actual ''high'' reported daily maximum 1-hour values from the same site at about the same time of the year (specifically, in the same calendar quarter) for unknown values that were not successfully measured. Note that the test is merely diagnostic in nature, intended to confirm that there is a very high likelihood that the original design value (the one with less than 75 percent data capture of hours by day and of days by quarter) reflects the true under-NAAQS-level status for that 3-year period; the result of this data substitution test (the ''test design value'', as defined in section 3(c)(ii)(B)) is not considered the actual design value. For this test, substitution is permitted only if there are at least 200 days across the three matching quarters of the three years under consideration (which is about 75 percent of all possible daily values in those three quarters) for which 75 percent of the hours in the day, including State-flagged data affected by exceptional events which have been approved for exclusion by the Administrator, have reported concentrations. However, maximum 1-hour values from days with less than 75 percent of the hours reported shall also be considered in identifying the high value to be used for substitution.

(B) The substitution test is as follows: Data substitution will be performed in all quarter periods that have less than 75 percent data capture but at least 50 percent data capture, including State-flagged data affected by exceptional events which have been approved for exclusion by the Administrator; if any quarter has less than 50 percent data capture then this substitution test cannot be used. Identify for each quarter (*e.g.,* January–March) the highest reported daily maximum 1-hour value for that quarter, excluding State-flagged data affected by exceptional events which have been approved for exclusion by the Administrator, looking across those three months of all three years under consideration. All daily maximum 1-hour values from all days in the quarter period shall be considered when identifying this highest value, including days with less than 75 percent data capture. If after substituting the highest reported daily maximum 1-hour value for a quarter for as much of the missing daily data in the matching deficient quarter(s) as is needed to make them 100 percent complete, the procedure in section 5 yields a recalculated 3-year 1-hour standard ''test design value'' less than or equal to the level of the standard, then the 1-hour primary or secondary standard design value is deemed to have passed the diagnostic test and is valid, and the level of the standard is deemed to have been met in that 3-year period. As noted in section 3(c)(i), in such a case, the 3-year design value based on the data actually reported, not the ''test design value'', shall be used as the valid design value.

(iii) (A) A 1-hour primary or secondary standard design value that is above the level of the NAAQS can be validated if the substitution test in section 3(c)(iii)(B) results in a ''test design value'' that is above the level of the NAAQS. The test substitutes actual ''low'' reported daily maximum 1-hour values from the same site at about the same time of the year (specifically, in the same three months of the calendar) for unknown hourly values that were not successfully measured. Note that the test is merely diagnostic in nature, intended to confirm that there is a very high likelihood that the original design value (the one with less than 75 percent data capture of hours by day and of days by quarter) reflects the true above-NAAQS-level status for that 3-year period; the result of this data substitution test (the ''test design value'', as defined in section 3(c)(iii)(B)) is not considered the actual design value. For this test, substitution is permitted only if there are a minimum number of available daily data points from which to identify the low quarter-specific daily maximum 1-hour values, specifically if there are at least 200 days across the three matching quarters of the three years under consideration (which is about 75 percent of all possible daily values in those three quarters) for which 75 percent of the hours in the day have reported concentrations. Only days with at least 75 percent of the hours reported shall be considered in identifying the low value to be used for substitution.

(B) The substitution test is as follows: Data substitution will be performed in all quarter periods that have less than 75 percent data capture. Identify for each quarter (*e.g.,* January–March) the lowest reported daily maximum 1-hour value for that quarter, looking across those three months of all three years under consideration. All daily maximum 1-hour values from all days with at least 75 percent capture in the quarter period shall be considered when identifying this lowest value. If after substituting the lowest reported daily maximum 1-hour value for a quarter for as much of the missing daily data in the matching deficient quarter(s) as is needed to make them 75 percent complete, the procedure in section 5 yields a recalculated 3-year 1-hour standard ''test design value'' above the level of the standard, then the 1-hour primary or secondary standard design value is deemed to have passed the diagnostic test and is valid, and the level of the standard is deemed to have been exceeded in that 3-year period. As noted in section 3(c)(i), in such a case, the 3-year design value based on the data actually reported, not the ''test design value'', shall be used as the valid design value.

(d) A 1-hour primary or secondary standard design value based on data that do not meet the completeness criteria stated in 3(b) and also do not satisfy section 3(c), may also be considered valid with the approval of, or at the initiative of, the Administrator, who may consider factors such as monitoring site closures/moves, monitoring diligence, the consistency and levels of the valid concentration measurements that are available, and nearby concentrations in determining whether to use such data.

(e) The procedures for calculating the 1-hour primary or secondary standard design values are given in section 5 of this appendix.

4. Rounding Conventions for the 1-hour Primary and Secondary SO_2 NAAQS.

* * * * *

(c) The 1-hour primary or secondary standard design value is calculated pursuant to section 5 and then rounded to the nearest whole number or 1 ppb (decimals 0.5 and greater are rounded up to the nearest whole number, and any decimal lower than 0.5 is rounded down to the nearest whole number).

5. Calculation Procedures for the 1-hour Primary and Secondary SO_2 NAAQS.

* * * * *

(b) The 1-hour primary or secondary standard design value for an ambient air quality monitoring site is the mean of the three annual 99th percentile values, rounded according to the conventions in section 4.

[FR Doc. 2011–18582 Filed 7–29–11; 8:45 am]

BILLING CODE 6560–50–P

FEDERAL REGISTER

Vol. 76 Monday,

No. 147 August 1, 2011

Part IV

Department of the Interior

Fish and Wildlife Service

50 CFR Part 80

Financial Assistance: Wildlife Restoration, Sport Fish Restoration, Hunter Education and Safety; Final Rule

DEPARTMENT OF THE INTERIOR

Fish and Wildlife Service

50 CFR Part 80

[Docket No. FWS–R9–WSR–2009–0088; 91400–5110–POLI–7B; 91400–9410–POLI–7B]

RIN 1018–AW65

Financial Assistance: Wildlife Restoration, Sport Fish Restoration, Hunter Education and Safety

AGENCY: Fish and Wildlife Service, Interior.

ACTION: Final rule.

SUMMARY: We, the U.S. Fish and Wildlife Service, are revising regulations governing the Wildlife Restoration, Sport Fish Restoration, and Hunter Education and Safety (Enhanced Hunter Education and Safety) financial assistance programs. We proposed a revision of these regulations on June 10, 2010, to address changes in law, regulation, policy, technology, and practice during the past 25 years. We also proposed a clarification of some provisions of the issue-specific final rule that we published on July 24, 2008. This final rule simplifies specific requirements of the establishing authorities of the three programs and clarifies terms in those authorities as well as terms generally used in grant administration. We organized the final rule to follow the life cycle of a grant, and we reworded and reformatted the regulations following Federal plain language policy and current rulemaking guidance.

DATES: The final rule is effective on August 31, 2011.

FOR FURTHER INFORMATION CONTACT: Joyce Johnson, Wildlife and Sport Fish Restoration Program, Division of Policy and Programs, U.S. Fish and Wildlife Service, 703–358–2156.

SUPPLEMENTARY INFORMATION:

Background

This final rule revises title 50 part 80 of the Code of Federal Regulations (CFR), which is ''Administrative Requirements, Pittman-Robertson Wildlife Restoration and Dingell-Johnson Sport Fish Restoration Acts.'' The primary users of these regulations are the fish and wildlife agencies of the 50 States, the Commonwealths of Puerto Rico and the Northern Mariana Islands, the District of Columbia, and the territories of Guam, the U.S. Virgin Islands, and American Samoa. We use ''State'' or ''States'' in this document to refer to any or all of these jurisdictions, except the District of Columbia for purposes of the Pittman-Robertson Wildlife Restoration Act and the two grant programs and one subprogram under its authority, because the Act does not authorize funding for the District. The term, ''the 50 States,'' applies only to the 50 States of the United States. It does not include the Commonwealths of Puerto Rico and the Northern Mariana Islands, the District of Columbia, or the territories of Guam, the U.S. Virgin Islands, and American Samoa.

These regulations tell States how they may: (a) Use revenues from hunting and fishing licenses; (b) receive annual apportionments from the Federal Aid to Wildlife Restoration Fund and the Sport Fish Restoration and Boating Trust Fund; (c) receive financial assistance from the Wildlife Restoration program, the Basic Hunter Education and Safety subprogram, and the Enhanced Hunter Education and Safety program; and (d) receive financial assistance from the Sport Fish Restoration program, the Recreational Boating Access subprogram, the Aquatic Resources Education subprogram, and the Outreach and Communications subprogram. These programs provide financial assistance to State fish and wildlife agencies to: (a) Restore or manage wildlife and sport fish; (b) provide hunter-education, hunter-development, and hunter-safety programs; (c) provide recreational boating access; (d) enhance the public's understanding of water resources, aquatic-life forms, and sport fishing; and (e) develop responsible attitudes and ethics toward aquatic and related environments. The Catalog of Federal Domestic Assistance at *https://www.cfda.gov* describes these programs under 15.611, 15.605, and 15.626.

The Pittman-Robertson Wildlife Restoration Act, as amended (50 Stat. 917; 16 U.S.C. 669–669k), and the Dingell-Johnson Sport Fish Restoration Act, as amended (64 Stat. 430; 16 U.S.C. 777–777n, except 777e–1 and g–1), established the programs affected by this final rule in 1937 and 1950 respectively. We refer to these acts in this document and in the final rule as ''the Acts.'' They established a hunting- and angling-based user-pay and user-benefit system in which the State fish and wildlife agencies of the 50 States, the Commonwealths, and the territories receive formula-based funding from a continuing appropriation from a dedicated fund in the Treasury. The District of Columbia also receives funding, but only under the Dingell-Johnson Sport Fish Restoration Act. The Pittman-Robertson Wildlife Restoration Act does not authorize funding for the District of Columbia. Industry partners pay excise taxes into a dedicated fund in the Treasury on equipment and gear manufactured for purchase by hunters, anglers, boaters, archers, and recreational shooters. The Service distributes these funds to the fish and wildlife agencies of the States that contribute matching funds, generally derived from hunting and fishing license sales. In fiscal year 2010, the States and other eligible jurisdictions received $384 million in new funding through the Wildlife Restoration and Enhanced Hunter Education and Safety programs and $363 million in new funding through the Sport Fish Restoration program.

We published a proposed rule in the June 10, 2010, **Federal Register** [75 FR 32877] to revise the regulations governing 50 CFR part 80. We reviewed and considered all comments that were delivered to the Service's Division of Policy and Directives Management during a 60-day period from June 10 to August 9, 2010, and all comments that were entered on *http://www.regulations.gov* or postmarked during that period. We received 10 comments from State agencies, 2 comments from nonprofit organizations, and 2 comments from one individual. Most commenters addressed several issues, so we reorganized the issues into 33 single-issue comments. This final rule adopts the proposed rule that we published on June 10, 2010, with changes based on the comments received. We discuss these comments in the following section.

Response to Public Comments

We arranged the public comments under the relevant sections of the rule. Each numbered comment is from only one agency, organization, or individual unless it states otherwise. The comments summarize the recommendations or opinions as the commenter presented them. We state in the response to each comment whether we made any changes as a result of the recommendation. We also state how we changed the rule, or we refer the reader to the location of the change in the final rule.

Some public comments led us to reexamine sections beyond those that the public addressed specifically. Based on this reexamination, we made nonsubstantive changes throughout the document to improve clarity, consistency, organization, or comprehensiveness. We addressed any substantive changes that resulted from this reexamination in our responses to the comments.

We use the term ''current'' to refer to 50 CFR part 80 or any section or paragraph of 50 CFR part 80 that became effective after publication of a final rule in the **Federal Register** at 73 FR 43120, July 24, 2008. The term ''proposed'' refers to language that was in the proposed rule published in the **Federal Register** at 75 FR 32877, June 10, 2010. The term ''new'' refers to the language of 50 CFR part 80 as published in this final rule.

Subpart A—General

Section 80.2 What terms do I need to know?

Comment 1: Define personal property and law-enforcement activities.

Response 1: We defined personal property to include intellectual property and gave examples at the new § 80.2. We removed the definition of intellectual property and all examples from the proposed § 80.20. To conform to these changes for personal property, we moved the examples of real property from the proposed § 80.20(b)(1) to the definition at § 80.2. We will consider proposing a definition of law enforcement during the next revision of 50 CFR part 80, so we can receive public comments on a proposed definition.

Comment 2: Three commenters had concerns about the proposed definition of wildlife, which includes only birds and mammals. One commenter said that the narrow definition would cause conflicts with States that define it more broadly. Another commenter requested that we broaden the definition to include alligators. The third commenter noted the proposed definition does not include snapping turtles or bullfrogs, which are part of at least one State's hunting or sportfishing program.

Response 2: We did not make any changes in response to these comments. The proposed rule's definition of wildlife is specific to wild birds and mammals. This is a common element in all State definitions of wildlife, and program regulations since 1956 have limited the benefits of the Pittman-Robertson Wildlife Restoration Act (Act) to wild birds and mammals. The Act did not define wildlife in the original 1937 legislation, and none of its amendments defined wildlife for purposes of projects under the Act. Although Public Law 106–553 (December 21, 2000) amended the Act and defined wildlife, the only effects of the amendment were to authorize fiscal year 2001 funds for the Wildlife Conservation and Restoration program and to clarify the effect of the Federal Advisory Committee Act. Public Law 106–553's definition of wildlife did not apply to projects under the Act according to section 902(f).

Subpart C—License Revenue

Section 80.20 What does revenue from hunting and fishing licenses include?

Comment 3: The opening statement in § 80.20(a) reads, ''Hunting and fishing license revenue includes: (1) Proceeds that the State fish and wildlife agency receives from the sale of State-issued general or special hunting or fishing licenses * * * '' This is a change from the current § 80.4, which reads, ''Revenues from license fees paid by hunters and fishermen are any revenues the State receives from the sale of licenses * * *'' This change could exclude as license revenue any license fees collected by other State agencies on behalf of the State fish and wildlife agencies.

Response 3: We changed the proposed § 80.20(a) to read, ''All proceeds from the sale of State-issued general or special hunting and fishing licenses, permits, stamps, tags, access and use fees, and other State charges to hunt or fish for recreational purposes.''

Subpart D—Certification of License Holders

Section 80.31 How does an agency certify the number of paid license holders?

Comment 4: Insert ''or his or her designee'' after ''the director of the [State] agency'' at § 80.31(b) because another individual may be responsible for submitting annual license-certification data electronically to the Service on behalf of the agency director.

Response 4: We changed § 80.31(b) to incorporate the recommendation.

Section 80.33 How does an agency decide who to count as paid license holders in the annual certification?

Comment 5: One commenter supported the language at § 80.33(a)(1) allowing States to count license holders regardless of whether the licensee engages in the activity. Two other commenters said that the State should not count license holders in the annual certification if the licensee does not hunt or fish.

Response 5: We did not make any changes based on this comment. Some people buy a license because they plan to hunt or fish, but never do. Others buy a license to take part in other outdoor activities on a State Wildlife Management Area where it is required for entry. Some buy a license solely to support wildlife and sport fish programs. Others buy a lifetime license as a gift for a child who is too young to hunt or fish. The Acts require States to count the number of paid hunting- or fishing-license holders. They do not require States to count those who actually hunt or fish.

Comment 6: Allow a State to verify a license holder in State records using a unique identifier instead of a name. This will accommodate a State that does not record the name of certain categories of license holders, such as minors, out-of-State hunters and anglers, and individuals who do not want to give their names for religious reasons.

Response 6: We accepted the recommendation, but we need to ensure that the agency can associate a license holder with the unique identifier. We changed the proposed § 80.33(a) to read: ''A State fish and wildlife agency must count only those people who have a license issued: (1) In the license holder's name, or (2) With a unique identifier that is traceable to the license holder, who must be verifiable in State records.''

Comment 7: Section 80.33(a)(4) does not allow a State director to count all persons who have paid licenses to hunt or fish in the State-specified certification period. This is inconsistent with the Acts and the proposed § 80.31(a).

Response 7: We did not make any changes based on this comment. We use data from the annual certification of licenses to divide excise tax revenue among the States. Section 80.33 provides an equitable way to count: (a) Individuals holding licenses for a fixed period corresponding to the license-certification year, and (b) other individuals holding licenses for a period that starts on the date of purchase and ends 365 days later (variable period). A State that sells variable-period licenses should not be able to count them in two annual certification periods if a State that sells only single-year fixed-period licenses can count them in only one annual certification period.

Comment 8: Combination license holders should be counted as both anglers and hunters at § 80.33(a)(6) only if the State offers an option to buy a separate license to hunt or fish. If no such option exists, the State should conduct a survey or use other means to find out how many license holders intend to hunt and how many intend to fish. The same approach should apply to use permits and entrance fees for wildlife management areas, to find out how many enter to hunt or fish, and how many enter for other activities. States should count only those who hunt or fish as paid license holders.

Response 8: The Acts require States to count the number of paid hunting and

fishing license holders. They do not require States to count those who actually hunt or fish, so we will not require surveys as the commenter recommended.

Comment 9: The proposed § 80.33(b) states that, for a multiyear license to be counted in each certification period, a State fish and wildlife agency must receive $1 per year of net revenue for each year in which the license is valid. Clarify whether the agency can count the multiyear license as a paid license if the agency spends the entire multiyear license fee immediately after receiving it. Without this clarification, an alternative interpretation is that the agency must hold the fee over the lifetime of the license so that $1 of net revenue is available in each year that the agency will count it as a paid license.

Response 9: We added a new § 80.35 on requirements for multiyear licenses. Paragraph (b) of this new section addresses the commenter's concern: ''The agency must receive net revenue from a multiyear license that is in close approximation to the net revenue received for a single-year license providing similar privileges:

(1) Each year during the license period, or

(2) At the time of sale as if it were a single-payment annuity, which is an investment of the license fee that shows the agency would have received at least the minimum required net revenue for each year of the license period.''

Section 80.34 (new section 80.36) May an agency count license holders in the annual certification if the agency receives funds from the State to cover their license fees?

Comment 10: One commenter said that senior citizens in his State must pay $11 for a license, of which the State fish and wildlife agency receives about $9. The commenter said this $9 in net revenue allows the State to count the license in only nine annual certification periods. He compared this to the proposed §§ 80.33(b) and 80.34 which would allow a State to provide funds to its fish and wildlife agency to cover fees normally charged for a category of license, such as senior citizens or veterans. The agency would be able to count those license holders in the annual certification for each year that the State covers the fees. The commenter said this change would potentially shift funds from States that offer low-cost licenses to those where the State covers fees normally charged for a category of license. Two other commenters opposed the proposed §§ 80.33(b) and 80.34, and two commenters supported these sections.

Response 10: We did not make any changes based on this comment. If a State chooses to pay the hunting and fishing license fees for a category of its citizens, it should be able to count the license holders in the annual certification if the State and its fish and wildlife agency satisfy the conditions at the new § 80.36.

Comment 11: The proposed § 80.34(b) requires that any funds that a State provides to its fish and wildlife agency to cover fees for a category of license holder must equal or exceed the fees that the license holder would have paid. Why is this different from the standard at the proposed § 80.33(a)(4), which requires that the agency receive at least $1 per year of net revenue?

Response 11: Licenses that provide similar privileges should not have a lower fee just because the State is paying for it. We retained this requirement with an additional clarification at the new § 80.36(d).

Subpart E—Eligible Activities

Section 80.50 What activities are eligible for funding under the Pittman-Robertson Wildlife Restoration Act?

Comment 12: Add as an eligible activity, ''Obtain data to guide and direct the regulation of hunting.''

Response 12: We added the recommended eligible activity at a new paragraph (a)(3).

Comment 13: The use of ''or'' in the proposed § 80.50(a)(4) allows funding for anything that simply provides public access. The public access should be associated with a wildlife- or habitat-management or conservation purpose.

Response 13: We changed the proposed § 80.50(a)(4) to read, ''Acquire real property suitable or capable of being made suitable for: (i) Wildlife habitat, or (ii) Public access for hunting and other wildlife-oriented recreation.'' We also moved the proposed § 80.50(a)(5)(ii) to the new § 80.50(a)(6)(ii) and changed it to read, ''Provide public access for hunting or other wildlife-oriented recreation.''

Comment 14: Add coordination of grants as an eligible activity for the Wildlife and Sport Fish Restoration programs. Add technical assistance as an eligible activity for the Wildlife Restoration program.

Response 14: We added ''Coordinate grants in the Wildlife Restoration program and related programs and subprograms'' as an eligible activity for the Wildlife Restoration program at the new § 80.50(a)(8). We also added ''Coordinate grants in the Sport Fish Restoration program and related programs and subprograms'' as an eligible activity for the Sport Fish Restoration program at the new § 80.51(a)(11). We did not add technical assistance because we may need to establish criteria to decide when it is appropriate, and we do not want to do this without the benefit of public comment following a proposed rule. However, the Regional Director may still approve technical assistance as an eligible activity on a case-by-case basis under the new section § 80.52, which we discuss in Response 15.

Comment 15: The ''closed list'' of eligible activities could exclude some creative projects that may be appropriate under the Act.

Response 15: We added a new section § 80.52 which reads: ''An activity may be eligible for funding even if this part does not explicitly designate it as an eligible activity if: (a) The State fish and wildlife agency justifies in the project statement how the activity will help carry out the purposes of the Pittman-Robertson Wildlife Restoration Act or the Dingell-Johnson Sport Fish Restoration Act, and (b) The Regional Director concurs with the justification.''

Comment 16: One commenter was pleased that the proposed rule included hunter development and recruitment as eligible for funding under the Enhanced Hunter Education and Safety program. Another commenter said that recruitment has no foundation in the Act. The commenter also said that the Service could consider marketing, promotion, and advertising that may be part of recruitment as public relations, which is an ineligible activity.

Response 16: We disagreed with the commenter's view that recruitment may be an ineligible activity. The Pittman-Robertson Wildlife Restoration Act at 16 U.S.C. 669h–1 specifically allows the use of funds for hunter-development programs, and recruitment may be the first phase of hunter development. We made no changes based on this comment.

Comment 17: The linkage that § 80.50(c)(1) makes between hunter development and target shooting is weak at best.

Response 17: Target shooting is an activity that develops certain hunting skills and supplements hunter education and firearm safety. We made no changes based on this comment.

Comment 18: The proposed rule should have said whether competitive shooting events are eligible activities and more specifically whether a grant could pay for prizes, scholarships, and awards associated with competitive shooting events.

Response 18: If the State fish and wildlife agency, or more typically, the subgrantee, holds the competitive shooting event for the primary purpose of producing income, the event would not be eligible for funding under the Pittman-Robertson Wildlife Restoration Act. We will consider developing Service policy on competitive events in the grant programs and subprograms authorized by the Acts. We made no changes based on this comment.

Section 80.51 What activities are eligible for funding under the Dingell-Johnson Sport Fish Restoration Act?

Comment 19: Add as an eligible activity for the Sport Fish Restoration program, ''Stock fish for recreational purposes.''

Response 19: We incorporated the recommendation at the new § 80.51(a)(5).

Comment 20: Change the second sentence at § 80.51(b)(1) so that it reads, ''A broad range of access facilities and associated amenities can qualify for funding, but they must provide benefits to recreational boaters.'' This change will align the regulation with the language of the Act. The Service's policy at 517 FW 7.12(B) already ensures that the facilities accommodate stakeholders who buy motorboat fuels or angling gear.

Response 20: We changed the sentence as recommended.

Section 80.52 (80.53 in final rule) What activities are ineligible for funding?

Comment 21: Clarify whether wildlife damage and predator control are eligible for funding from (a) a grant in the Wildlife Restoration program, or (b) license revenue.

Response 21: We will consider this issue during the next revision of 50 CFR 80, so that the public will have the opportunity to offer comments. We made no changes based on this comment.

Subpart F—Allocation of Funds by an Agency

Section 80.60 What is the relationship between the Basic Hunter Education and Safety subprogram and the Enhanced Hunter Education and Safety program?

Comment 22: Explain at § 80.60(c) that the Service reapportions unobligated Enhanced Hunter Education funds to eligible States as Wildlife Restoration funds and not Hunter Education funds.

Response 22: We changed § 80.60(c) to incorporate this recommendation.

Section 80.66 What requirements apply to allocation of funds between marine and freshwater fisheries projects?

Comment 23: The proposed § 80.66(a) requires the use of a proportion based on the ratio of a State's resident marine anglers to the State's total anglers. This ratio must equal the ratio of: (a) The Sport Fish Restoration funds that the State allocates for marine projects, to (b) the total Sport Fish Restoration funds. However, some marine anglers also fish in freshwater, so a State has to allocate this overlap when developing a ratio for marine and a ratio for freshwater anglers. The Service has misinterpreted 16 U.S.C. 777(b)(1) which reads, '' * * * [E]ach coastal State * * * shall equitably allocate amounts apportioned to such State * * * between marine fish projects and freshwater fish projects in the same proportion as the estimated number of resident marine anglers and the estimated number of resident freshwater anglers, respectively, bear to the estimated number of all resident anglers in that State.'' This requires only a comparison of the number of marine anglers to the number of freshwater anglers in the same order as a comparison of the dollars allocated to marine projects and the dollars allocated to freshwater projects. The relationship of the numbers of the two types of anglers is a ratio, just as the relationship of the two dollar amounts is a ratio. The two ratios are in the ''same proportion'' as required by § 777(b)(1). The proposed rule incorrectly requires a proportion based on: (a) A comparison of the funds allocated to marine fisheries projects with the total funds allocated to marine and freshwater fisheries, and (b) a comparison of marine anglers to the total number of marine and freshwater anglers.

Response 23: The commenter's recommendation would make the allocation of funds simpler, but the proposed § 80.66(a) is the most reasonable interpretation of what the drafters of the legislation intended. In any case, it would not be appropriate to impose a different allocation method based on an alternative interpretation without the benefit of public review. We made no changes based on this comment, but we will review this issue before the next revision of 50 CFR 80.

Subpart G—Application for a Grant

Section 80.83 What is the Federal share of allowable cost?

Comment 24: Section 80.83(a) gives the Regional Director the discretion to reimburse allowable costs on a sliding scale between 10 and 75 percent, but does not give guidance on how the Regional Director should make that decision.

Response 24: The commenter's general concern was also applicable to the other paragraphs of § 80.83. We changed the proposed § 80.83 to provide more detail on how the Regional Director decides on the Federal share.

Subpart I—Program Income

Section 80.120 What is program income?

Comment 25: Explain at the proposed § 80.120(c)(1) why hunting and fishing license revenue collected as fees for special-area access or recreation cannot be program income.

Response 25: We deleted the proposed § 80.120(c)(1) from the list of examples of revenue that cannot be program income. This deletion is the result of a July 2010 determination that hunter-access fees on lands leased with grant funds for public hunting may qualify as program income under certain conditions.

Comment 26: Explain the basis of the distinction between leases with terms greater than 10 years and leases with terms less than 10 years.

Response 26: Leases are legally complex. Their classification as personal or real property varies significantly among the States and even within a State depending on the type of property. The classification of a lease as real or personal property is important because it determines whether rent earned by a grantee from the lease of real property acquired under a grant is classified as program income or as proceeds from the disposition of real property. We proposed the 10-year threshold to simplify this complexity by adopting a common standard for classifying leases as real or personal property for purposes of the grant programs under the Acts. We chose 10 years because it is a commonly accepted dividing line between long-term and short-term leases, which often affects the lessees' rights and responsibilities. We will present this subject in the context of a future proposed rule that focuses on the acquisition and disposition of all types of real property under a grant. Until we can develop a proposed rule with that focus, we will rely on case-by-case legal interpretations when faced with lease-related issues. We changed the proposed § 80.120(c)(6), which is the new § 80.120(c)(5), to read, ''Proceeds from the sale of real property.''

Section 80.123 How may an agency use program income?

Comment 27: One commenter stated that we should not require State fish and wildlife agencies to obtain the Regional Director's approval of the matching method for using program income if we do not require the Regional Director's approval for other activities under a grant. This commenter and another stated that all grants qualified for use of the matching method under the criteria at § 80.123(c), and both commenters said that we should consider approving the use of the matching method without conditions or give specific guidance on when its use is appropriate. A third commenter also requested guidance on when the matching method is appropriate.

Response 27: The statement at § 80.123(c) that the Regional Director may approve the use of the matching method is consistent with other prior-approval requirements of this regulation. The Director has delegated the authority to conduct grant programs to the Regional Director with only a few exceptions. The definition of ''Regional Director'' at § 80.2 includes his or her designated representative, and Regional Directors have generally delegated most decisions on grant programs to the chiefs of their Regional Wildlife and Sport Fish Restoration Program Divisions. We will consider proposing criteria for approval of the matching method of using program income during the next revision of 50 CFR 80 so the public will have the opportunity to offer comments. We made no changes based on these comments.

Subpart J—Real Property

Section 80.130 Does an agency have to hold title to real property acquired under a grant?

Comment 28: Do not restrict a State agency's ability in § 80.130 to carry out a grant-funded project on lands to which it does not have title. States may want to use grant funds to manage wildlife on Federal lands under the terms of a cooperative agreement.

Response 28: Both §§ 80.130 and 80.132 relate to the commenter's concern. We based these sections on 16 U.S.C. 777g(a), 43 CFR 12.71(a) and (b), and the current regulation at § 80.20, which has been part of 50 CFR part 80 with only a minor change since 1982. The final rule does not affect an agency's ability to manage Federal lands cooperatively if this management does not include the completion of a capital improvement.

Section 80.131 Does an agency have to hold an easement acquired under a grant?

Comment 29: Replace ''subgrantee'' with ''third party'' because ''subgrant'' implies that grant funding passes to a subgrantee for use at the subgrantee's discretion.

Response 29: A subgrantee is an entity that receives an award of money or property. A subgrantee is accountable to the grantee for the use of the money or property (see definitions of subgrant and subgrantee at 43 CFR 12.43). The proposed § 80.131(b) allows the grantee to subgrant only a concurrent right to hold the easement or a right of enforcement. The grantee will be able to set the terms of the subgrant agreement and ensure that the subgrantee's right will not supersede and will be concurrent with the agency's right of enforcement. Since a third party is not necessarily a subgrantee, the grantee may not be able to set the terms of any agreement on the right of enforcement or a concurrent right to hold the easement. We made no changes based on this comment.

Comment 30: Define ''concurrent right to hold.''

Response 30: We defined the term at the new § 80.131(b)(2).

Section 80.132 Does an agency have to control the land or water where it completes capital improvements?

See Comments 31 and 32 and our responses.

Section 80.134 How must an agency use real property?

Comment 31: Instead of requiring a grantee to use real property for the uses in the grant, the regulation should state that the property must continue to serve the purpose of the grant and must be used for the administration of the fish and wildlife programs.

Response 31: The new § 80.134(a) states, ''If a grant funds acquisition of an interest in a parcel of land or water, the State fish and wildlife agency must use it for the purpose authorized in the grant.'' The requirement to use property for the administration of fish and wildlife programs applies only if: (a) The administration of fish and wildlife programs is a purpose of the grant-funded project that acquired, completed, operated, or maintained the real property; or (b) license revenue funded all or part of the project [see the proposed 50 CFR 80.10(c)(2)]. We made no changes based on this comment.

Comment 32: Clarify that grant projects on property other than that acquired with grant funds fall within the requirements of § 80.134.

Response 32: The comment applies to § 80.132 as well as § 80.134. We changed §§ 80.132 and 80.134 to incorporate the recommendation and to clarify in § 80.134 the differences in use requirements for specific types of grant-funded projects.

Section 80.137 What if real property is no longer useful or needed for its original purpose?

Comment 33: The proposed § 80.137 says that if a State fish and wildlife agency's director and the Service's Regional Director jointly decide that grant-funded real property is no longer useful or needed for its original purpose, the State agency's director may request disposition instructions. Provide guidance on how the Service and State agency will cooperatively formulate these instructions.

Response 33: We changed the proposed § 80.137(b) so that it reads: ''Request disposition instructions for the real property under the process described at 43 CFR 12.71, 'Administrative and Audit Requirements and Cost Principles for Assistance Programs'.''

Required Determinations

Regulatory Planning and Review (E.O. 12866)

The Office of Management and Budget (OMB) has determined that this rule is not significant and has not reviewed this rule under E.O. 12866. OMB bases its determination on the following four criteria:

a. Whether the rule will have an annual effect of $100 million or more on the economy or adversely affect an economic sector, productivity, jobs, the environment, or other units of the government.

b. Whether the rule will create inconsistencies with other Federal agencies' actions.

c. Whether the rule will materially affect entitlements, grants, user fees, loan programs, or the rights and obligations of their recipients.

d. Whether the rule raises novel legal or policy issues.

Regulatory Flexibility Act (5 U.S.C. 601 et seq.)

The Regulatory Flexibility Act requires an agency to consider the impact of final rules on small entities, *i.e.,* small businesses, small organizations, and small government jurisdictions. If there is a significant economic impact on a substantial number of small entities, the agency must perform a Regulatory Flexibility Analysis. This is not required if the

head of an agency certifies the rule would not have a significant economic impact on a substantial number of small entities. The Small Business Regulatory Enforcement Fairness Act (SBREFA) amended the Regulatory Flexibility Act to require Federal agencies to state the factual basis for certifying that a rule would not have a significant economic impact on a substantial number of small entities.

We have examined this final rule's potential effects on small entities as required by the Regulatory Flexibility Act. We have determined that the changes in the final rule will not have a significant impact and do not require a Regulatory Flexibility Analysis because the changes:

a. Give information to State fish and wildlife agencies that allows them to apply for and administer grants more easily, more efficiently, and with greater flexibility. Only State fish and wildlife agencies may receive grants in the three programs affected by this regulation, but small entities sometimes voluntarily become subgrantees of agencies. Any impact on these subgrantees would be beneficial.

b. Address changes in law and regulation. This rule helps grant applicants and recipients by making the regulations consistent with current standards. Any impact on small entities that voluntarily become subgrantees of agencies would be beneficial.

c. Change three provisions on license certification adopted in a final rule published on July 24, 2008, based on subsequent experience. These changes would impact only agencies and not small entities.

d. Clarify additional issues in the Pittman-Robertson Wildlife Restoration Act and Dingell-Johnson Sport Fish Restoration Act. This clarification will help agencies comply with statutory requirements and increase awareness of alternatives available under the law. Any impact on small entities that voluntarily become subgrantees of agencies would be beneficial.

e. Clarify that (1) cooperative farming or grazing arrangements and (2) sales receipts retained by concessioners or contractors are not program income. This clarification allows States to expand projects with small businesses and farmers without making these cooperative arrangements or sales receipts subject to program income restrictions. This clarification would be potentially beneficial to the small entities that voluntarily become cooperative farmers, cooperative ranchers, and concessioners.

f. Add information that allows States to enter into agreements with nonprofit organizations to share rights or responsibilities for easements acquired under grants for the mutual benefit of both parties. This addition would benefit the small entities that enter into these agreements voluntarily.

g. Reword and reorganize the regulation to make it easier to understand. Any impact on the small entities that voluntarily become subgrantees of agencies would be beneficial.

The Service has determined that the changes primarily impact State governments. The small entities affected by the changes are primarily concessioners, cooperative farmers, cooperative ranchers, and subgrantees who voluntarily enter into mutually beneficial relationships with an agency. The impact on small entities would be very limited and beneficial in all cases.

Consequently, we certify that because this final rule would not have a significant economic effect on a substantial number of small entities, a Regulatory Flexibility Analysis is not required.

In addition, this final rule is not a major rule under SBREFA (5 U.S.C. 804(2)) and would not have a significant impact on a substantial number of small entities because it does not:

a. Have an annual effect on the economy of $100 million or more.

b. Cause a major increase in costs or prices for consumers; individual industries; Federal, State, or local government agencies; or geographic regions.

c. Have significant adverse effects on competition, employment, investment, productivity, innovation, or the ability of U.S.-based enterprises to compete with foreign-based enterprises.

Unfunded Mandates Reform Act

The Unfunded Mandates Reform Act of 1995 (2 U.S.C. Ch. 25; Pub. L. 104–4) establishes requirements for Federal agencies to assess the effects of their regulatory actions on State, local, and tribal governments and the private sector. The Act requires each Federal agency, to the extent permitted by law, to prepare a written assessment of the effects of a final rule with Federal mandates that may result in the expenditure by State, local, and tribal governments, in aggregate, or by the private sector, of $100 million or more (adjusted annually for inflation) in any one year. We have determined the following under the Unfunded Mandates Reform Act (2 U.S.C. 1501 *et seq.*):

a. As discussed in the determination for the Regulatory Flexibility Act, this final rule would not have a significant economic effect on a substantial number of small entities.

b. The regulation does not require a small government agency plan or any other requirement for expenditure of local funds.

c. The programs governed by the current regulations and enhanced by the changes potentially assist small governments financially when they occasionally and voluntarily participate as subgrantees of an agency.

d. The final rule clarifies and enhances the current regulations allowing State, local, and tribal governments, and the private sector to receive the benefits of grant funding in a more flexible, efficient, and effective manner. They may receive these benefits as a subgrantee of a State fish and wildlife agency, a cooperating farmer or rancher, a concessioner, a concurrent holder of a grant-acquired easement, or a holder of enforcement rights under an easement.

e. Any costs incurred by a State, local, and tribal government, or the private sector are voluntary. There are no mandated costs associated with the final rule.

f. The benefits of grant funding outweigh the costs. The Federal Government provides up to 75 percent of the cost of each grant to the 50 States in the three programs affected by the final rule. The Federal Government may also provide up to 100 percent of the cost of each grant to the Commonwealths of Puerto Rico and the Northern Mariana Islands, the District of Columbia, and the territories of Guam, the U.S. Virgin Islands, and American Samoa. All 50 States and other eligible jurisdictions voluntarily apply for grants in these programs each year. This rate of participation is clear evidence that the benefits of grant funding outweigh the costs.

g. This final rule would not produce a Federal mandate of $100 million or greater in any year, i.e., it is not a ''significant regulatory action'' under the Unfunded Mandates Reform Act.

Takings

This final rule does not have significant takings implications under E.O. 12630 because it does not have a provision for taking private property. Therefore, a takings implication assessment is not required.

Federalism

This final rule does not have sufficient Federalism effects to warrant preparation of a Federalism assessment under E.O. 13132. It will not interfere with the States' ability to manage themselves or their funds. We work

closely with the States in administration of these programs, and they helped us identify those sections of the current regulations in need of change and new issues in need of clarification through regulation. In drafting the final rule, we received comments from committees of the Association of Fish and Wildlife Agencies and from the Joint Federal/State Task Force on Federal Assistance Policy. The Director of the U.S. Fish and Wildlife Service and the President of the Association of Fish and Wildlife Agencies jointly chartered the Joint Federal/State Task Force on Federal Assistance Policy in 2002 to identify issues of national concern in the three grant programs affected by the final rule.

Civil Justice Reform

The Office of the Solicitor has determined under E.O. 12988 that the rule would not unduly burden the judicial system and meets the requirements of sections 3(a) and 3(b)(2) of the Order. The final rule will benefit grantees because it:

a. Updates the regulations to reflect changes in policy and practice during the past 25 years;

b. Makes the regulations easier to use and understand by improving the organization and using plain language;

c. Modifies four provisions in the final rule to amend 50 CFR part 80 published in the **Federal Register** at 73 FR 43120 on July 24, 2008, based on subsequent experience; and

d. Addresses four new issues that State fish and wildlife agencies raised in response to the proposed rule to amend 50 CFR part 80 published in the **Federal Register** at 73 FR 24523, May 5, 2008.

Paperwork Reduction Act

We examined the final rule under the Paperwork Reduction Act (44 U.S.C. 3501 *et seq.*). We may not collect or sponsor and you are not required to respond to a collection of information unless it displays a current OMB control number. The final rule at 50 CFR 80.160 describes eight information collections. All of these collections request information from State fish and wildlife agencies, and all have current OMB control numbers.

OMB authorized and approved Governmentwide standard forms for four of the eight information collections. These four information collections are for the purposes of: (a) Application for a grant; (b) assurances related to authority, capability, and legal compliance for nonconstruction programs, (c) assurances related to authority, capability, and legal compliance for construction programs; and (d) reporting on the use of Federal funds, match, and program income.

OMB approved three other information collections in the final rule under control number 1018–0109, but has not approved Governmentwide standard forms for these collections. The purposes of these information collections are to provide the Service with: (a) A project statement in support of a grant application, (b) a report on progress in completing a grant-funded project, and (c) a request to approve an update or another change in information provided in a previously approved application. OMB authorized these information collections in its Circular A–102.

The Acts and the current 50 CFR 80.10 authorize the eighth information collection. This collection allows the Service to learn the number of people who have a paid license to hunt and the number of people who have a paid license to fish in each State during a State-specified certification year. The Service uses this information in statutory formulas to apportion funds in the Wildlife Restoration and Sport Fish Restoration programs among the States. OMB approved this information collection on forms FWS 3–154a and 3–154b under control number 1018–0007. The final rule does not change the information required on forms FWS 3–154a and 3–154b. It merely establishes a common approach for States to assign license holders to a certification year.

National Environmental Policy Act

We have analyzed this rule under the National Environmental Policy Act, 42 U.S.C. 432–437(f) and part 516 of the Departmental Manual. This rule does not constitute a major Federal action significantly affecting the quality of the human environment. An environmental impact statement/assessment is not required due to the categorical exclusion for administrative changes provided at 516 DM 8.5A(3).

Government-to-Government Relationship With Tribes

We have evaluated potential effects on federally recognized Indian tribes under the President's memorandum of April 29, 1994, ''Government-to-Government Relations with Native American Tribal Governments'' (59 FR 22951), E.O. 13175, and 512 DM 2. We have determined that there are no potential effects. This final rule will not interfere with the tribes' ability to manage themselves or their funds.

Energy Supply, Distribution, or Use (E.O. 13211)

E.O. 13211 addresses regulations that significantly affect energy supply, distribution, and use and requires agencies to prepare Statements of Energy Effects when undertaking certain actions. This rule is not a significant regulatory action under E.O. 12866 and will not affect energy supplies, distribution, or use. Therefore, this action is not a significant energy action and no Statement of Energy Effects is required.

List of Subjects in 50 CFR Part 80

Education, Fish, Fishing, Grants administration, Grant programs, Hunting, Natural resources, Real property acquisition, Recreation and recreation areas, Signs and symbols, Wildlife.

Final Regulation Promulgation

For the reasons discussed in the preamble, we amend title 50 of the Code of Federal Regulations, chapter I, subchapter F, by revising part 80 to read as set forth below:

Title 50—Wildlife and Fisheries

PART 80—ADMINISTRATIVE REQUIREMENTS, PITTMAN-ROBERTSON WILDLIFE RESTORATION AND DINGELL-JOHNSON SPORT FISH RESTORATION ACTS

Subpart A—General

Sec.
80.1 What does this part do?
80.2 What terms do I need to know?

Subpart B—State Fish and Wildlife Agency Eligibility

80.10 Who is eligible to receive the benefits of the Acts?
80.11 How does a State become ineligible to receive the benefits of the Acts?
80.12 Does an agency have to confirm that it wants to receive an annual apportionment of funds?

Subpart C—License Revenue

80.20 What does revenue from hunting and fishing licenses include?
80.21 What if a State diverts license revenue from the control of its fish and wildlife agency?
80.22 What must a State do to resolve a declaration of diversion?
80.23 Does a declaration of diversion affect a previous Federal obligation of funds?

Subpart D—Certification of License Holders

80.30 Why must an agency certify the number of paid license holders?
80.31 How does an agency certify the number of paid license holders?
80.32 What is the certification period?

80.33 How does an agency decide who to count as paid license holders in the annual certification?
80.34 How does an agency calculate net revenue from a license?
80.35 What additional requirements apply to multiyear licenses?
80.36 May an agency count license holders in the annual certification if the agency receives funds from the State to cover their license fees?
80.37 What must an agency do if it becomes aware of errors in its certified license data?
80.38 May the Service recalculate an apportionment if an agency submits revised data?
80.39 May the Director correct a Service error in apportioning funds?

Subpart E—Eligible Activities

80.50 What activities are eligible for funding under the Pittman-Robertson Wildlife Restoration Act?
80.51 What activities are eligible for funding under the Dingell-Johnson Sport Fish Restoration Act?
80.52 May an activity be eligible for funding if it is not explicitly eligible in this part?
80.53 Are costs of State central services eligible for funding?
80.54 What activities are ineligible for funding?
80.55 May an agency receive a grant to carry out part of a larger project?
80.56 How does a proposed project qualify as substantial in character and design?

Subpart F—Allocation of Funds by an Agency

80.60 What is the relationship between the Basic Hunter Education and Safety subprogram and the Enhanced Hunter Education and Safety program?
80.61 What requirements apply to funds for the Recreational Boating Access subprogram?
80.62 What limitations apply to spending on the Aquatic Resource Education and the Outreach and Communications subprograms?
80.63 Does an agency have to allocate costs in multipurpose projects and facilities?
80.64 How does an agency allocate costs in multipurpose projects and facilities?
80.65 Does an agency have to allocate funds between marine and freshwater fisheries projects?
80.66 What requirements apply to allocation of funds between marine and freshwater fisheries projects?
80.67 May an agency finance an activity from more than one annual apportionment?
80.68 What requirements apply to financing an activity from more than one annual apportionment?

Subpart G—Application for a Grant

80.80 How does an agency apply for a grant?
80.81 What must an agency submit when applying for a comprehensive-management-system grant?
80.82 What must an agency submit when applying for a project-by-project grant?
80.83 What is the Federal share of allowable costs?
80.84 How does the Service establish the non-Federal share of allowable costs?
80.85 What requirements apply to match?

Subpart H—General Grant Administration

80.90 What are the grantee's responsibilities?
80.91 What is a Federal obligation of funds and how does it occur?
80.92 How long are funds available for a Federal obligation?
80.93 When may an agency incur costs under a grant?
80.94 May an agency incur costs before the beginning of the grant period?
80.95 How does an agency receive Federal grant funds?
80.96 May an agency use Federal funds without using match?
80.97 May an agency barter goods or services to carry out a grant-funded project?
80.98 How must an agency report barter transactions?
80.99 Are symbols available to identify projects?
80.100 Does an agency have to display one of the symbols in this part on a completed project?

Subpart I—Program Income

80.120 What is program income?
80.121 May an agency earn program income?
80.122 May an agency deduct the costs of generating program income from gross income?
80.123 How may an agency use program income?
80.124 How may an agency use unexpended program income?
80.125 How must an agency treat income that it earns after the grant period?
80.126 How must an agency treat income earned by a subgrantee after the grant period?

Subpart J—Real Property

80.130 Does an agency have to hold title to real property acquired under a grant?
80.131 Does an agency have to hold an easement acquired under a grant?
80.132 Does an agency have to control the land or water where it completes capital improvements?
80.133 Does an agency have to maintain acquired or completed capital improvements?
80.134 How must an agency use real property?
80.135 What if an agency allows a use of real property that interferes with its authorized purpose?
80.136 Is it a diversion if an agency does not use grant-acquired real property for its authorized purpose?
80.137 What if real property is no longer useful or needed for its original purpose?

Subpart K—Revisions and Appeals

80.150 How does an agency ask for revision of a grant?
80.151 May an agency appeal a decision?

Subpart L—Information Collection

80.160 What are the information collection requirements of this part?

Authority: 16 U.S.C. 669–669k; 16 U.S.C. 777–777n, except 777e–1 and g–1.

Subpart A—General

§ 80.1 What does this part do?

This part of the Code of Federal Regulations tells States how they may:

(a) Use revenues derived from State hunting and fishing licenses in compliance with the Acts.

(b) Receive annual apportionments from the Federal Aid to Wildlife Restoration Fund (16 U.S.C. 669(b)), if authorized, and the Sport Fish Restoration and Boating Trust Fund (26 U.S.C 9504).

(c) Receive financial assistance from the Wildlife Restoration program, the Basic Hunter Education and Safety subprogram, and the Enhanced Hunter Education and Safety grant program, if authorized.

(d) Receive financial assistance from the Sport Fish Restoration program, the Recreational Boating Access subprogram, the Aquatic Resources Education subprogram, and the Outreach and Communications subprogram.

(e) Comply with the requirements of the Acts.

§ 80.2 What terms do I need to know?

The terms in this section pertain only to the regulations in this part.

Acts means the Pittman-Robertson Wildlife Restoration Act of September 2, 1937, as amended (16 U.S.C. 669–669k), and the Dingell-Johnson Sport Fish Restoration Act of August 9, 1950, as amended (16 U.S.C. 777–777n, except 777e–1 and g–1).

Agency means a State fish and wildlife agency.

Angler means a person who fishes for sport fish for recreational purposes as permitted by State law.

Capital improvement. (1) *Capital improvement* means:

(i) A structure that costs at least $10,000 to build; or

(ii) The alteration, renovation, or repair of a structure if it increases the structure's useful life or its market value by at least $10,000.

(2) An agency may use its own definition of capital improvement if its definition includes all capital improvements as defined here.

Comprehensive management system is a State fish and wildlife agency's method of operations that links programs, financial systems, human resources, goals, products, and services. It assesses the current, projected, and

desired status of fish and wildlife; it develops a strategic plan and carries it out through an operational planning process; and it evaluates results. The planning period is at least 5 years using a minimum 15-year projection of the desires and needs of the State's citizens. A comprehensive-management-system grant funds all or part of a State's comprehensive management system.

Construction means the act of building or significantly renovating, altering, or repairing a structure. Acquiring, clearing, and reshaping land and demolishing structures are types or phases of construction. Examples of structures are buildings, roads, parking lots, utility lines, fences, piers, wells, pump stations, ditches, dams, dikes, water-control structures, fish-hatchery raceways, and shooting ranges.

Director means:

(1) The person whom the Secretary:

(i) Appointed as the chief executive official of the U.S. Fish and Wildlife Service, and

(ii) Delegated authority to administer the Acts nationally; or

(2) A deputy or another person authorized temporarily to administer the Acts nationally.

Diversion means any use of revenue from hunting and fishing licenses for a purpose other than administration of the State fish and wildlife agency.

Fee interest means the right to possession, use, and enjoyment of a parcel of land or water for an indefinite period. A fee interest, as used in this part, may be the:

(1) Fee simple, which includes all possible interests or rights that a person can hold in a parcel of land or water; or

(2) Fee with exceptions to title, which excludes one or more real property interests that would otherwise be part of the fee simple.

Grant means an award of money, the principal purpose of which is to transfer funds or property from a Federal agency to a grantee to support or stimulate an authorized public purpose under the Acts. This part uses the term grant for both a grant and a cooperative agreement for convenience of reference. This use does not affect the legal distinction between the two instruments. The meaning of grant in the terms *grant funds, grant-funded, under a grant,* and *under the grant* includes the matching cash and any matching in-kind contributions in addition to the Federal award of money.

Grantee means the State fish and wildlife agency that applies for the grant and carries out grant-funded activities in programs authorized by the Acts. The State fish and wildlife agency acts on behalf of the State government, which is the legal entity and is accountable for the use of Federal funds, matching funds, and matching in-kind contributions.

Lease means an agreement in which the owner of a fee interest transfers to a lessee the right of exclusive possession and use of an area of land or water for a fixed period, which may be renewable. The lessor cannot readily revoke the lease at his or her discretion. The lessee pays rent periodically or as a single payment. The lessor must be able to regain possession of the lessee's interest (*leasehold interest*) at the end of the lease term. An agreement that does not correspond to this definition is not a lease even if it is labeled as one.

Match means the value of any non-Federal in-kind contributions and the portion of the costs of a grant-funded project or projects not borne by the Federal Government.

Personal property means anything tangible or intangible that is not real property.

(1) Tangible personal property includes:

(i) Objects, such as equipment and supplies, that are moveable without substantive damage to the land or any structure to which they may be attached;

(ii) Soil, rock, gravel, minerals, gas, oil, or water after excavation or extraction from the surface or subsurface;

(iii) Commodities derived from trees or other vegetation after harvest or separation from the land; and

(iv) Annual crops before or after harvest.

(2) Intangible personal property includes:

(i) Intellectual property, such as patents or copyrights;

(ii) Securities, such as bonds and interest-bearing accounts; and

(iii) Licenses, which are personal privileges to use an area of land or water with at least one of the following attributes:

(A) Are revocable at the landowner's discretion;

(B) Terminate when the landowner dies or the area of land or water passes to another owner; or

(C) Do not transfer a right of exclusive use and possession of an area of land or water.

Project means one or more related undertakings in a project-by-project grant that are necessary to fulfill a need or needs, as defined by a State fish and wildlife agency, consistent with the purposes of the appropriate Act. For convenience of reference in this part, the meaning of project includes an agency's fish and wildlife program under a comprehensive management system grant.

Project-by-project grant means an award of money based on a detailed statement of a project or projects and other supporting documentation.

Real property means one, several, or all interests, benefits, and rights inherent in the ownership of a parcel of land or water. Examples of real property include fee and leasehold interests, conservation easements, and mineral rights.

(1) A parcel includes (unless limited by its legal description) the air space above the parcel, the ground below it, and anything physically and firmly attached to it by a natural process or human action. Examples include standing timber, other vegetation (except annual crops), buildings, roads, fences, and other structures.

(2) A parcel may also have rights attached to it by a legally prescribed procedure. Examples include water rights or an access easement that allows the parcel's owner to travel across an adjacent parcel.

(3) The legal classification of an interest, benefit, or right depends on its attributes rather than the name assigned to it. For example, a grazing ''lease'' is often a type of personal property known as a license, which is described in the definition of personal property in this section.

Regional Director means the person appointed by the Director to be the chief executive official of one of the Service's geographic Regions, or a deputy or another person temporarily authorized to exercise the authority of the chief executive official of one of the Service's geographic Regions. This person's responsibility does not extend to any administrative units that the Service's Washington Office supervises directly in that geographic Region.

Secretary means the person appointed by the President to direct the operation of the Department of the Interior, or a deputy or another person who is temporarily authorized to direct the operation of the Department.

Service means the U.S. Fish and Wildlife Service.

Sport fish means aquatic, gill-breathing, vertebrate animals with paired fins, having material value for recreation in the marine and fresh waters of the United States.

State means any State of the United States, the Commonwealths of Puerto Rico and the Northern Mariana Islands, and the territories of Guam, the U.S. Virgin Islands, and American Samoa. *State* also includes the District of Columbia for purposes of the Dingell-Johnson Sport Fish Restoration Act, the

Sport Fish Restoration program, and its subprograms. *State* does not include the District of Columbia for purposes of the Pittman-Robertson Wildlife Restoration Act and the programs and subprogram under the Act because the Pittman-Robertson Wildlife Restoration Act does not authorize funding for the District. References to ''the 50 States'' apply only to the 50 States of the United States and do not include the Commonwealths of Puerto Rico and the Northern Mariana Islands, the District of Columbia, or the territories of Guam, the U.S. Virgin Islands, and American Samoa.

State fish and wildlife agency means the administrative unit designated by State law or regulation to carry out State laws for management of fish and wildlife resources. If an agency has other jurisdictional responsibilities, the agency is considered the State fish and wildlife agency only when exercising responsibilities specific to management of the State's fish and wildlife resources.

Subaccount means a record of financial transactions for groups of similar activities based on programs and subprograms. Each group has a unique number. Different subaccounts also distinguish between benefits to marine or freshwater fisheries in the programs and subprograms authorized by the Dingell-Johnson Sport Fish Restoration Act.

Useful life means the period during which a federally funded capital improvement is capable of fulfilling its intended purpose with adequate routine maintenance.

Wildlife means the indigenous or naturalized species of birds or mammals that are either:

(1) Wild and free-ranging;

(2) Held in a captive breeding program established to reintroduce individuals of a depleted indigenous species into previously occupied range; or

(3) Under the jurisdiction of a State fish and wildlife agency.

Subpart B—State Fish and Wildlife Agency Eligibility

§ 80.10 Who is eligible to receive the benefits of the Acts?

States acting through their fish and wildlife agencies are eligible for benefits of the Acts only if they pass and maintain legislation that:

(a) Assents to the provisions of the Acts;

(b) Ensures the conservation of fish and wildlife; and

(c) Requires that revenue from hunting and fishing licenses be:

(1) Controlled only by the State fish and wildlife agency; and

(2) Used only for administration of the State fish and wildlife agency, which includes only the functions required to manage the agency and the fish- and wildlife-related resources for which the agency has authority under State law.

§ 80.11 How does a State become ineligible to receive the benefits of the Acts?

A State becomes ineligible to receive the benefits of the Acts if it:

(a) Fails materially to comply with any law, regulation, or term of a grant as it relates to acceptance and use of funds under the Acts;

(b) Does not have legislation required at § 80.10 or passes legislation contrary to the Acts; or

(c) Diverts hunting and fishing license revenue from:

(1) The control of the State fish and wildlife agency; or

(2) Purposes other than the agency's administration.

§ 80.12 Does an agency have to confirm that it wants to receive an annual apportionment of funds?

No. However, if a State fish and wildlife agency does not want to receive the annual apportionment of funds, it must notify the Service in writing within 60 days after receiving a preliminary certificate of apportionment.

Subpart C—License Revenue

§ 80.20 What does revenue from hunting and fishing licenses include?

Hunting and fishing license revenue includes:

(a) All proceeds from State-issued general or special hunting and fishing licenses, permits, stamps, tags, access and use fees, and other State charges to hunt or fish for recreational purposes. Revenue from licenses sold by vendors is net income to the State after deducting reasonable sales fees or similar amounts retained by vendors.

(b) Real or personal property acquired with license revenue.

(c) Income from the sale, lease, or rental of, granting rights to, or a fee for access to real or personal property acquired or constructed with license revenue.

(d) Income from the sale, lease, or rental of, granting rights to, or a fee for access to a recreational opportunity, product, or commodity derived from real or personal property acquired, managed, maintained, or produced by using license revenue.

(e) Interest, dividends, or other income earned on license revenue.

(f) Reimbursements for expenditures originally paid with license revenue.

(g) Payments received for services funded by license revenue.

§ 80.21 What if a State diverts license revenue from the control of its fish and wildlife agency?

The Director may declare a State to be in diversion if it violates the requirements of § 80.10 by diverting license revenue from the control of its fish and wildlife agency to purposes other than the agency's administration. The State is then ineligible to receive benefits under the relevant Act from the date the Director signs the declaration until the State resolves the diversion. Only the Director may declare a State to be in diversion, and only the Director may rescind the declaration.

§ 80.22 What must a State do to resolve a declaration of diversion?

The State must complete the actions in paragraphs (a) through (e) of this section to resolve a declaration of diversion. The State must use a source of funds other than license revenue to fund the replacement of license revenue.

(a) If necessary, the State must enact adequate legislative prohibitions to prevent diversions of license revenue.

(b) The State fish and wildlife agency must replace all diverted cash derived from license revenue and the interest lost up to the date of repayment. It must enter into State records the receipt of this cash and interest.

(c) The agency must receive either the revenue earned from diverted property during the period of diversion or the current market rental rate of any diverted property, whichever is greater.

(d) The agency must take one of the following actions to resolve a diversion of real, personal, or intellectual property:

(1) Regain management control of the property, which must be in about the same condition as before diversion;

(2) Receive replacement property that meets the criteria in paragraph (e) of this section; or

(3) Receive a cash amount at least equal to the current market value of the diverted property only if the Director agrees that the actions described in paragraphs (d)(1) and (d)(2) of this section are impractical.

(e) To be acceptable under paragraph (d)(2) of this section:

(1) Replacement property must have both:

(i) Market value that at least equals the current market value of the diverted property; and

(ii) Fish or wildlife benefits that at least equal those of the property diverted.

(2) The Director must agree that the replacement property meets the requirements of paragraph (e)(1) of this section.

§ 80.23 Does a declaration of diversion affect a previous Federal obligation of funds?

No. Federal funds obligated before the date that the Director declares a diversion remain available for expenditure without regard to the intervening period of the State's ineligibility. See § 80.91 for when a Federal obligation occurs.

Subpart D—Certification of License Holders

§ 80.30 Why must an agency certify the number of paid license holders?

A State fish and wildlife agency must certify the number of people having paid licenses to hunt and paid licenses to fish because the Service uses these data in statutory formulas to apportion funds in the Wildlife Restoration and Sport Fish Restoration programs among the States.

§ 80.31 How does an agency certify the number of paid license holders?

(a) A State fish and wildlife agency certifies the number of paid license holders by responding to the Director's annual request for the following information:

(1) The number of people who have paid licenses to hunt in the State during the State-specified certification period (certification period); and

(2) The number of people who have paid licenses to fish in the State during the certification period.

(b) The agency director or his or her designee:

(1) Must certify the information at paragraph (a) of this section in the format that the Director specifies;

(2) Must provide documentation to support the accuracy of this information at the Director's request;

(3) Is responsible for eliminating multiple counting of the same individuals in the information that he or she certifies; and

(4) May use statistical sampling, automated record consolidation, or other techniques approved by the Director for this purpose.

(c) If an agency director uses statistical sampling to eliminate multiple counting of the same individuals, he or she must ensure that the sampling is complete by the earlier of the following:

(1) Five years after the last statistical sample; or

(2) Before completing the first certification following any change in the licensing system that could affect the number of license holders.

§ 80.32 What is the certification period?

A certification period must:

(a) Be 12 consecutive months;

(b) Correspond to the State's fiscal year or license year;

(c) Be consistent from year to year unless the Director approves a change; and

(d) End at least 1 year and no more than 2 years before the beginning of the Federal fiscal year in which the apportioned funds first become available for expenditure.

§ 80.33 How does an agency decide who to count as paid license holders in the annual certification?

(a) A State fish and wildlife agency must count only those people who have a license issued:

(1) In the license holder's name; or

(2) With a unique identifier that is traceable to the license holder, who must be verifiable in State records.

(b) An agency must follow the rules in this table in deciding how to count license holders in the annual certification:

Type of license holder	How to count each license holder
(1) A person who has either a paid hunting license or a paid sportfishing license even if the person is not required to have a paid license or is unable to hunt or fish.	Once.
(2) A person who has more than one paid hunting license because the person either voluntarily obtained them or was required to have more than one license.	Once.
(3) A person who has more than one paid sportfishing license because the person either voluntarily obtained them or was required to have more than one license.	Once.
(4) A person who has a paid single-year hunting license or a paid single-year sportfishing license for which the agency receives at least $1 of net revenue. (Single-year licenses are valid for any length of time less than 2 years.)	Once in the certification period in which the license first becomes valid.
(5) A person who has a paid multiyear hunting license or a paid multiyear sportfishing license for which the agency receives at least $1 of net revenue for each year in which the license is valid. (Multiyear licenses must also meet the requirements at § 80.35.)	Once in each certification period in which the license is valid.
(6) A person holding a paid single-year combination license permitting both hunting and sportfishing for which the agency receives at least $2 of net revenue.	Twice in the first certification period in which the license is valid: once as a person who has a paid hunting license, and once as a person who has a paid sportfishing license.
(7) A person holding a paid multiyear combination license permitting both hunting and sportfishing for which the agency receives at least $2 of net revenue for each year in which the license is valid. (Multiyear licenses must also meet the requirements in § 80.35.)	Twice in each certification period in which the license is valid; once as a person who has a paid hunting license, and once as a person who has a paid sportfishing license.
(8) A person who has a license that allows the license holder only to trap animals or only to engage in commercial fishing or other commercial activities.	Cannot be counted.

§ 80.34 How does an agency calculate net revenue from a license?

The State fish and wildlife agency must calculate net revenue from a license by subtracting the per-license costs of issuing the license from the revenue generated by the license. Examples of costs of issuing licenses are vendors' fees, automated license-system costs, licensing-unit personnel costs, and the costs of printing and distribution.

§ 80.35 What additional requirements apply to multiyear licenses?

The following additional requirements apply to multiyear licenses:

(a) A multiyear license may be valid for either a specific or indeterminate number of years, but it must be valid for at least 2 years.

(b) The agency must receive net revenue from a multiyear license that is in close approximation to the net revenue received for a single-year license providing similar privileges:

(1) Each year during the license period; or

(2) At the time of sale as if it were a single-payment annuity, which is an investment of the license fee that results in the agency receiving at least the minimum required net revenue for each year of the license period.

(c) An agency may spend a multiyear license fee as soon as the agency receives it as long as the fee provides the minimum required net revenue for the license period.

(d) The agency must count only the licenses that meet the minimum required net revenue for the license period based on:

(1) The duration of the license in the case of a multiyear license with a specified ending date; or

(2) Whether the license holder remains alive.

(e) The agency must obtain the Director's approval of its proposed technique to decide how many multiyear-license holders remain alive in the certification period. Some examples of techniques are statistical sampling, life-expectancy tables, and mortality tables.

§ 80.36 May an agency count license holders in the annual certification if the agency receives funds from the State to cover their license fees?

If a State fish and wildlife agency receives funds from the State to cover fees for some license holders, the agency may count those license holders in the annual certification only under the following conditions:

(a) The State funds to cover license fees must come from a source other than hunting- and fishing-license revenue.

(b) The State must identify funds to cover license fees separately from other funds provided to the agency.

(c) The agency must receive at least the average amount of State-provided discretionary funds that it received for the administration of the State's fish and wildlife agency during the State's five previous fiscal years.

(1) State-provided discretionary funds are those from the State's general fund that the State may increase or decrease if it chooses to do so.

(2) Some State-provided funds are from special taxes, trust funds, gifts, bequests, or other sources specifically dedicated to the support of the State fish and wildlife agency. These funds typically fluctuate annually due to interest rates, sales, or other factors. They are not discretionary funds for purposes of this part as long as the State does not take any action to reduce the amount available to its fish and wildlife agency.

(d) The agency must receive State funds that are at least equal to the fees charged for the single-year license providing similar privileges. If the State does not have a single-year license providing similar privileges, the Director must approve the fee paid by the State for those license holders.

(e) The agency must receive and account for the State funds as license revenue.

(f) The agency must issue licenses in the license holder's name or by using a unique identifier that is traceable to the license holder, who must be verifiable in State records.

(g) The license fees must meet all other requirements of 50 CFR 80.

§ 80.37 What must an agency do if it becomes aware of errors in its certified license data?

A State fish and wildlife agency must submit revised certified data on paid license holders within 90 days after it becomes aware of errors in its certified data. The State may become ineligible to participate in the benefits of the relevant Act if it becomes aware of errors in its certified data and does not resubmit accurate certified data within 90 days.

§ 80.38 May the Service recalculate an apportionment if an agency submits revised data?

The Service may recalculate an apportionment of funds based on revised certified license data under the following conditions:

(a) If the Service receives revised certified data for a pending apportionment before the Director approves the final apportionment, the Service may recalculate the pending apportionment.

(b) If the Service receives revised certified data for an apportionment after the Director has approved the final version of that apportionment, the Service may recalculate the final apportionment only if it would not reduce funds to other State fish and wildlife agencies.

§ 80.39 May the Director correct a Service error in apportioning funds?

Yes. The Director may correct any error that the Service makes in apportioning funds.

Subpart E—Eligible Activities

§ 80.50 What activities are eligible for funding under the Pittman-Robertson Wildlife Restoration Act?

The following activities are eligible for funding under the Pittman-Robertson Wildlife Restoration Act:

(a) *Wildlife Restoration program.*

(1) Restore and manage wildlife for the benefit of the public.

(2) Conduct research on the problems of managing wildlife and its habitat if necessary to administer wildlife resources efficiently.

(3) Obtain data to guide and direct the regulation of hunting.

(4) Acquire real property suitable or capable of being made suitable for:

(i) Wildlife habitat; or

(ii) Public access for hunting or other wildlife-oriented recreation.

(5) Restore, rehabilitate, improve, or manage areas of lands or waters as wildlife habitat.

(6) Build structures or acquire equipment, goods, and services to:

(i) Restore, rehabilitate, or improve lands or waters as wildlife habitat; or

(ii) Provide public access for hunting or other wildlife-oriented recreation.

(7) Operate or maintain:

(i) Projects that the State fish and wildlife agency completed under the Pittman-Robertson Wildlife Restoration Act; or

(ii) Facilities that the agency acquired or constructed with funds other than those authorized under the Pittman-Robertson Wildlife Restoration Act if these facilities are necessary to carry out activities authorized by the Pittman-Robertson Wildlife Restoration Act.

(8) Coordinate grants in the Wildlife Restoration program and related programs and subprograms.

(b) *Wildlife Restoration—Basic Hunter Education and Safety subprogram.*

(1) Teach the skills, knowledge, and attitudes necessary to be a responsible hunter.

(2) Construct, operate, or maintain firearm and archery ranges for public use.

(c) *Enhanced Hunter Education and Safety program.*

(1) Enhance programs for hunter education, hunter development, and firearm and archery safety. Hunter-development programs introduce individuals to and recruit them to take part in hunting, bow hunting, target shooting, or archery.

(2) Enhance interstate coordination of hunter-education and firearm- and archery-range programs.

(3) Enhance programs for education, safety, or development of bow hunters, archers, and shooters.

(4) Enhance construction and development of firearm and archery ranges.

(5) Update safety features of firearm and archery ranges.

§ 80.51 What activities are eligible for funding under the Dingell-Johnson Sport Fish Restoration Act?

The following activities are eligible for funding under the Dingell-Johnson Sport Fish Restoration Act:

(a) *Sport Fish Restoration program.*

(1) Restore and manage sport fish for the benefit of the public.

(2) Conduct research on the problems of managing fish and their habitat and the problems of fish culture if necessary to administer sport fish resources efficiently.

(3) Obtain data to guide and direct the regulation of fishing. These data may be on:

(i) Size and geographic range of sport fish populations;

(ii) Changes in sport fish populations due to fishing, other human activities, or natural causes; and

(iii) Effects of any measures or regulations applied.

(4) Develop and adopt plans to restock sport fish and forage fish in the natural areas or districts covered by the plans; and obtain data to develop, carry out, and test the effectiveness of the plans.

(5) Stock fish for recreational purposes.

(6) Acquire real property suitable or capable of being made suitable for:

(i) Sport fish habitat or as a buffer to protect that habitat; or

(ii) Public access for sport fishing. Closures to sport fishing must be based on the recommendations of the State fish and wildlife agency for fish and wildlife management purposes.

(7) Restore, rehabilitate, improve, or manage:

(i) Aquatic areas adaptable for sport fish habitat; or

(ii) Land adaptable as a buffer to protect sport fish habitat.

(8) Build structures or acquire equipment, goods, and services to:

(i) Restore, rehabilitate, or improve aquatic habitat for sport fish, or land as a buffer to protect aquatic habitat for sport fish; or

(ii) Provide public access for sport fishing.

(9) Construct, renovate, operate, or maintain pumpout and dump stations. A pumpout station is a facility that pumps or receives sewage from a type III marine sanitation device that the U.S. Coast Guard requires on some vessels. A dump station, also referred to as a ''waste reception facility,'' is specifically designed to receive waste from portable toilets on vessels.

(10) Operate or maintain:

(i) Projects that the State fish and wildlife agency completed under the Dingell-Johnson Sport Fish Restoration Act; or

(ii) Facilities that the agency acquired or constructed with funds other than those authorized by the Dingell-Johnson Sport Fish Restoration Act if these facilities are necessary to carry out activities authorized by the Act.

(11) Coordinate grants in the Sport Fish Restoration program and related programs and subprograms.

(b) *Sport Fish Restoration—Recreational Boating Access subprogram.*

(1) Acquire land for new facilities, build new facilities, or acquire, renovate, or improve existing facilities to create or improve public access to the waters of the United States or improve the suitability of these waters for recreational boating. A broad range of access facilities and associated amenities can qualify for funding, but they must provide benefits to recreational boaters. ''Facilities'' includes auxiliary structures necessary to ensure safe use of recreational boating access facilities.

(2) Conduct surveys to determine the adequacy, number, location, and quality of facilities providing access to recreational waters for all sizes of recreational boats.

(c) *Sport Fish Restoration—Aquatic Resource Education subprogram.* Enhance the public's understanding of water resources, aquatic life forms, and sport fishing, and develop responsible attitudes and ethics toward the aquatic environment.

(d) *Sport Fish Restoration—Outreach and Communications subprogram.*

(1) Improve communications with anglers, boaters, and the general public on sport fishing and boating opportunities.

(2) Increase participation in sport fishing and boating.

(3) Advance the adoption of sound fishing and boating practices including safety.

(4) Promote conservation and responsible use of the aquatic resources of the United States.

§ 80.52 May an activity be eligible for funding if it is not explicitly eligible in this part?

An activity may be eligible for funding even if this part does not explicitly designate it as an eligible activity if:

(a) The State fish and wildlife agency justifies in the project statement how the activity will help carry out the purposes of the Pittman-Robertson Wildlife Restoration Act or the Dingell-Johnson Sport Fish Restoration Act; and

(b) The Regional Director concurs with the justification.

§ 80.53 Are costs of State central services eligible for funding?

Administrative costs in the form of overhead or indirect costs for State central services outside of the State fish and wildlife agency are eligible for funding under the Acts and must follow an approved cost allocation plan. These expenses must not exceed 3 percent of the funds apportioned annually to the State under the Acts.

§ 80.54 What activities are ineligible for funding?

The following activities are ineligible for funding under the Acts, except when necessary to carry out project purposes approved by the Regional Director:

(a) Law enforcement activities.

(b) Public relations activities to promote the State fish and wildlife agency, other State administrative units, or the State.

(c) Activities conducted for the primary purpose of producing income.

(d) Activities, projects, or programs that promote or encourage opposition to the regulated taking of fish, hunting, or the trapping of wildlife.

§ 80.55 May an agency receive a grant to carry out part of a larger project?

A State fish and wildlife agency may receive a grant to carry out part of a larger project that uses funds unrelated to the grant. The grant-funded part of the larger project must:

(a) Result in an identifiable outcome consistent with the purposes of the grant program;

(b) Be substantial in character and design;

(c) Meet the requirements of §§ 80.130 through 80.136 for any real property acquired under the grant and any capital improvements completed under the grant; and

(d) Meet all other requirements of the grant program.

§ 80.56 How does a proposed project qualify as substantial in character and design?

A proposed project qualifies as substantial in character and design if it:

(a) Describes a need consistent with the Acts;

(b) States a purpose and sets objectives, both of which are based on the need;

(c) Uses a planned approach, appropriate procedures, and accepted principles of fish and wildlife conservation and management, research, or education; and

(d) Is cost effective.

Subpart F—Allocation of Funds by an Agency

§ 80.60 What is the relationship between the Basic Hunter Education and Safety subprogram and the Enhanced Hunter Education and Safety program?

The relationship between the Basic Hunter Education and Safety subprogram (Basic Hunter Education) and the Enhanced Hunter Education and Safety program (Enhanced Hunter Education) is as follows:

	Basic Hunter Education funds	Enhanced Hunter Education funds
(a) Which activities are eligible for funding?	Those listed at § 80.50(a) and (b)	Those listed at 80.50(c), but see 80.60(d) under Basic Hunter Education funds.
(b) How long are funds available for obligation?	Two Federal fiscal years	One Federal fiscal year.
(c) What if funds are not fully obligated during the period of availability?	The Service may use unobligated funds to carry out the Migratory Bird Conservation Act (16 U.S.C. 715 *et seq.*).	The Service reapportions unobligated funds to eligible States as Wildlife Restoration funds for the following fiscal year. States are eligible to receive funds only if their Basic Hunter Education funds were fully obligated in the preceding fiscal year for activities at § 80.50(b).
(d) What if funds are fully obligated during the period of availability?	If Basic Hunter Education funds are fully obligated for activities listed at 80.50(b), the agency may use that fiscal year's Enhanced Hunter Education funds for eligible activities related to Basic Hunter Education, Enhanced Hunter Education, or the Wildlife Restoration program.	No special provisions apply.

§ 80.61 What requirements apply to funds for the Recreational Boating Access subprogram?

The requirements of this section apply to allocating and obligating funds for the Recreational Boating Access subprogram.

(a) A State fish and wildlife agency must allocate funds from each annual apportionment under the Dingell-Johnson Sport Fish Restoration Act for use in the subprogram.

(b) Over each 5-year period, the total allocation for the subprogram in each of the Service's geographic regions must average at least 15 percent of the Sport Fish Restoration funds apportioned to the States in that Region. As long as this requirement is met, an individual State agency may allocate more or less than 15 percent of its annual apportionment in a single Federal fiscal year with the Regional Director's approval.

(c) The Regional Director calculates Regional allocation averages for separate 5-year periods that coincide with Federal fiscal years 2008–2012, 2013–2017, 2018–2022, and each subsequent 5-year period.

(d) If the total Regional allocation for a 5-year period is less than 15 percent, the State agencies may, in a memorandum of understanding, agree among themselves which of them will make the additional allocations to eliminate the Regional shortfall.

(e) This paragraph applies if State fish and wildlife agencies do not agree on which of them will make additional allocations to bring the average Regional allocation to at least 15 percent over a 5-year period. If the agencies do not agree:

(1) The Regional Director may require States in the Region to make changes needed to achieve the minimum 15-percent Regional average before the end of the fifth year; and

(2) The Regional Director must not require a State to increase or decrease its allocation if the State has allocated at least 15 percent over the 5-year period.

(f) A Federal obligation of these allocated funds must occur by the end of the fourth consecutive Federal fiscal year after the Federal fiscal year in which the funds first became available for allocation.

(g) If the agency's application to use these funds has not led to a Federal obligation by that time, these allocated funds become available for reapportionment among the State fish and wildlife agencies for the following fiscal year.

§ 80.62 What limitations apply to spending on the Aquatic Resource Education and the Outreach and Communications subprograms?

The limitations in this section apply to State fish and wildlife agency spending on the Aquatic Resource Education and Outreach and Communications subprograms.

(a) Each State's fish and wildlife agency may spend a maximum of 15 percent of the annual amount apportioned to the State from the Sport Fish Restoration and Boating Trust Fund for activities in both subprograms. The 15-percent maximum applies to both subprograms as if they were one.

(b) The 15-percent maximum for the subprograms does not apply to the Commonwealths of Puerto Rico and the Northern Mariana Islands, the District of Columbia, and the territories of Guam, the U.S. Virgin Islands, and American Samoa. These jurisdictions may spend more than 15 percent of their annual apportionments for both subprograms with the approval of the Regional Director.

§ 80.63 Does an agency have to allocate costs in multipurpose projects and facilities?

Yes. A State fish and wildlife agency must allocate costs in multipurpose projects and facilities. A grant-funded project or facility is multipurpose if it carries out the purposes of:

(a) A single grant program under the Acts; and

(b) Another grant program under the Acts, a grant program not under the Acts, or an activity unrelated to grants.

§ 80.64 How does an agency allocate costs in multipurpose projects and facilities?

A State fish and wildlife agency must allocate costs in multipurpose projects based on the uses or benefits for each purpose that will result from the completed project or facility. The agency must describe the method used to allocate costs in multipurpose projects or facilities in the project

statement included in the grant application.

§ 80.65 Does an agency have to allocate funds between marine and freshwater fisheries projects?

Yes. Each coastal State's fish and wildlife agency must equitably allocate the funds apportioned under the Dingell-Johnson Sport Fish Restoration Act between projects with benefits for marine fisheries and projects with benefits for freshwater fisheries.

(a) The subprograms authorized by the Dingell-Johnson Sport Fish Restoration Act do not have to allocate funding in the same manner as long as the State fish and wildlife agency equitably allocates Dingell-Johnson Sport Fish Restoration funds as a whole between marine and freshwater fisheries.

(b) The coastal States for purposes of this allocation are:

(1) Alabama, Alaska, California, Connecticut, Delaware, Florida, Georgia, Hawaii, Louisiana, Maine, Maryland, Massachusetts, Mississippi, New Hampshire, New Jersey, New York, North Carolina, Oregon, Rhode Island, South Carolina, Texas, Virginia, and Washington;

(2) The Commonwealths of Puerto Rico and the Northern Mariana Islands; and

(3) The territories of Guam, the U.S. Virgin Islands, and American Samoa.

§ 80.66 What requirements apply to allocation of funds between marine and freshwater fisheries projects?

The requirements of this section apply to allocation of funds between marine and freshwater fisheries projects.

(a) When a State fish and wildlife agency allocates and obligates funds it must meet the following requirements:

(1) The ratio of total funds obligated for marine fisheries projects to total funds obligated for marine and freshwater fisheries projects combined must equal the ratio of resident marine anglers to the total number of resident anglers in the State; and

(2) The ratio of total funds obligated for freshwater fisheries projects to total funds obligated for marine and freshwater fisheries projects combined must equal the ratio of resident freshwater anglers to the total number of resident anglers in the State.

(b) A resident angler is one who fishes for recreational purposes in the same State where he or she maintains legal residence.

(c) Agencies must determine the relative distribution of resident anglers in the State between those that fish in marine environments and those that fish in freshwater environments. Agencies must use the National Survey of Fishing, Hunting, and Wildlife-associated Recreation or another statistically reliable survey or technique approved by the Regional Director for this purpose.

(d) If an agency uses statistical sampling to determine the relative distribution of resident anglers in the State between those that fish in marine environments and those that fish in freshwater environments, the sampling must be complete by the earlier of the following:

(1) Five years after the last statistical sample; or

(2) Before completing the first certification following any change in the licensing system that could affect the number of sportfishing license holders.

(e) The amounts allocated from each year's apportionment do not necessarily have to result in an equitable allocation for each year. However, the amounts allocated over a variable period, not to exceed 3 years, must result in an equitable allocation between marine and freshwater fisheries projects.

(f) Agencies that fail to allocate funds equitably between marine and freshwater fisheries projects may become ineligible to use Sport Fish Restoration program funds. These agencies must remain ineligible until they demonstrate to the Director that they have allocated the funds equitably.

§ 80.67 May an agency finance an activity from more than one annual apportionment?

A State fish and wildlife agency may use funds from more than one annual apportionment to finance high-cost projects, such as construction or acquisition of lands or interests in lands, including water rights. An agency may do this in either of the following ways:

(a) Finance the entire cost of the acquisition or construction from a non-Federal funding source. The Service will reimburse funds to the agency in succeeding apportionment years according to a plan approved by the Regional Director and subject to the availability of funds.

(b) Negotiate an installment purchase or contract in which the agency pays periodic and specified amounts to the seller or contractor according to a plan that schedules either reimbursements or advances of funds immediately before need. The Service will reimburse or advance funds to the agency according to a plan approved by the Regional Director and subject to the availability of funds.

§ 80.68 What requirements apply to financing an activity from more than one annual apportionment?

The following conditions apply to financing an activity from more than one annual apportionment:

(a) A State fish and wildlife agency must agree to complete the project even if Federal funds are not available. If an agency does not complete the project, it must recover any expended Federal funds that did not result in commensurate wildlife or sport-fishery benefits. The agency must then reallocate the recovered funds to approved projects in the same program.

(b) The project statement included with the application must have a complete schedule of payments to finish the project.

(c) Interest and other financing costs may be allowable subject to the restrictions in the applicable Federal Cost Principles.

Subpart G—Application for a Grant

§ 80.80 How does an agency apply for a grant?

(a) An agency applies for a grant by sending the Regional Director:

(1) Completed standard forms that are:

(i) Approved by the Office of Management and Budget for the grant application process; and

(ii) Available on the Federal Web site for electronic grant applications at *http://www.grants.gov;* and

(2) Information required for a comprehensive-management-system grant or a project-by-project grant.

(b) The director of the State fish and wildlife agency or his or her designee must sign all standard forms submitted in the application process.

(c) The agency must send copies of all standard forms and supporting information to the State Clearinghouse or Single Point of Contact before sending it to the Regional Director if the State supports this process under Executive Order 12372, Intergovernmental Review of Federal Programs.

§ 80.81 What must an agency submit when applying for a comprehensive-management-system grant?

A State fish and wildlife agency must submit the following documents when applying for a comprehensive-management-system grant:

(a) The standard form for an application for Federal assistance in a mandatory grant program.

(b) The standard forms for assurances for nonconstruction programs and construction programs as applicable. Agencies may submit these standard forms for assurances annually to the

Regional Director for use with all applications for Federal assistance in the programs and subprograms under the Acts.

(c) A statement of cost estimates by subaccount. Agencies may obtain the subaccount numbers from the Service's Regional Division of Wildlife and Sport Fish Restoration.

(d) Supporting documentation explaining how the proposed work complies with the Acts, the provisions of this part, and other applicable laws and regulations.

(e) A statement of the agency's intent to carry out and fund part or all of its comprehensive management system through a grant.

(f) A description of the agency's comprehensive management system including inventory, strategic plan, operational plan, and evaluation. ''Inventory'' refers to the process or processes that an agency uses to:

(1) Determine actual, projected, and desired resource and asset status; and

(2) Identify management problems, issues, needs, and opportunities.

(g) A description of the State fish and wildlife agency program covered by the comprehensive management system.

(h) Contact information for the State fish and wildlife agency employee who is directly responsible for the integrity and operation of the comprehensive management system.

(i) A description of how the public can take part in decisionmaking for the comprehensive management system.

§ 80.82 What must an agency submit when applying for a project-by-project grant?

A State fish and wildlife agency must submit the following documents when applying for a project-by-project grant:

(a) The standard form for an application for Federal assistance in a mandatory grant program.

(b) The standard forms for assurances for nonconstruction programs and construction programs as applicable. Agencies may submit these standard forms for assurances annually to the Regional Director for use with all applications for Federal assistance in the programs and subprograms under the Acts.

(c) A project statement that describes each proposed project and provides the following information:

(1) *Need.* Explain why the project is necessary and how it fulfills the purposes of the relevant Act.

(2) *Purpose and Objectives.* State the purpose and objectives, and base them on the need. The purpose states the desired outcome of the proposed project in general or abstract terms. The objectives state the desired outcome of the proposed project in terms that are specific and quantified.

(3) *Results or benefits expected.*

(4) *Approach.* Describe the methods used to achieve the stated objectives.

(5) *Useful life.* Propose a useful life for each capital improvement, and reference the method used to determine the useful life of a capital improvement with a value greater than $100,000.

(6) *Geographic location.*

(7) *Principal investigator for research projects.* Record the principal investigator's name, work address, and work telephone number.

(8) *Program income.*

(i) Estimate the amount of program income that the project is likely to generate.

(ii) Indicate the method or combination of methods (deduction, addition, or matching) of applying program income to Federal and non-Federal outlays.

(iii) Request the Regional Director's approval for the matching method. Describe how the agency proposes to use the program income and the expected results. Describe the essential need for using program income as match.

(iv) Indicate whether the agency wants to treat program income that it earns after the grant period as license revenue or additional funding for purposes consistent with the grant or program.

(v) Indicate whether the agency wants to treat program income that the subgrantee earns as license revenue, additional funding for the purposes consistent with the grant or subprogram, or income subject only to the terms of the subgrant agreement.

(9) *Budget narrative.* Provide costs by project and subaccount with additional information sufficient to show that the project is cost effective. Agencies may obtain the subaccount numbers from the Service's Regional Division of Wildlife and Sport Fish Restoration. Describe any item that requires the Service's approval and estimate its cost. Examples are preaward costs and capital expenditures for land, buildings, and equipment. Include a schedule of payments to finish the project if an agency proposes to use funds from two or more annual apportionments.

(10) *Multipurpose projects.* Describe the method for allocating costs in multipurpose projects and facilities as described in §§ 80.63 and 80.64.

(11) *Relationship with other grants.* Describe any relationship between this project and other work funded by Federal grants that is planned, anticipated, or underway.

(12) *Timeline.* Describe significant milestones in completing the project and any accomplishments to date.

(13) *General.* Provide information in the project statement that:

(i) Shows that the proposed activities are eligible for funding and substantial in character and design; and

(ii) Enables the Service to comply with the applicable requirements of the National Environmental Policy Act of 1969 (42 U.S.C. 4321 and 4331–4347), the Endangered Species Act of 1973 (16 U.S.C. 1531 *et seq.*), the National Historic Preservation Act (16 U.S.C. 470s), and other laws, regulations, and policies.

§ 80.83 What is the Federal share of allowable costs?

(a) The Regional Director must provide at least 10 percent and no more than 75 percent of the allowable costs of a grant-funded project to the fish and wildlife agencies of the 50 States. The Regional Director generally approves any Federal share from 10 to 75 percent as proposed by one of the 50 States if the:

(1) Funds are available; and

(2) Application is complete and consistent with laws, regulations, and policies.

(b) The Regional Director may provide funds to the District of Columbia to pay 75 to 100 percent of the allowable costs of a grant-funded project in a program or subprogram authorized by the Dingell-Johnson Sport Fish Restoration Act. The Regional Director decides on the specific Federal share between 75 and 100 percent based on what he or she decides is fair, just, and equitable. The Regional Director may reduce the Federal share to less than 75 percent of allowable project costs only if the District of Columbia voluntarily provides match to pay the remaining allowable costs. However, the Regional Director must not reduce the Federal share below 10 percent unless he or she follows the procedure at paragraph (d) of this section.

(c) The Regional Director may provide funds to pay 75 to 100 percent of the allowable costs of a project funded by a grant to a fish and wildlife agency of the Commonwealths of Puerto Rico and the Northern Mariana Islands and the territories of Guam, the U.S. Virgin Islands, and American Samoa. The Regional Director decides on the specific Federal share between 75 and 100 percent based on what he or she decides is fair, just, and equitable. The Regional Director may reduce the Federal share to less than 75 percent of allowable project costs only if the Commonwealth or territorial fish and

wildlife agency voluntarily provides match to pay the remaining allowable costs. However, the Regional Director must not reduce the Federal share below 10 percent unless he or she follows the procedure at paragraph (d) of this section. The Federal share of allowable costs for a grant-funded project for the Commonwealth of the Northern Mariana Islands and the territories of Guam, the U.S. Virgin Islands, and American Samoa may be affected by the waiver process described at § 80.84(c).

(d) The Regional Director may waive the 10-percent minimum Federal share of allowable costs if the State, District of Columbia, Commonwealth, or territory requests a waiver and provides compelling reasons to justify why it is necessary for the Federal government to fund less than 10 percent of the allowable costs of a project.

§ 80.84 How does the Service establish the non-Federal share of allowable costs?

(a) To establish the non-Federal share of a grant-funded project for the 50 States, the Regional Director approves an application for Federal assistance in which the State fish and wildlife agency proposes the specific non-Federal share by estimating the Federal and match dollars, consistent with § 80.83(a).

(b) To establish the non-Federal share of a grant-funded project for the District of Columbia and the Commonwealth of Puerto Rico, the Regional Director:

(1) Decides which percentage is fair, just, and equitable for the Federal share consistent with § 80.83(b) through (d);

(2) Subtracts the Federal share percentage from 100 percent to determine the percentage of non-Federal share; and

(3) Applies the percentage of non-Federal share to the allowable costs of a grant-funded project to determine the match requirement.

(c) To establish the non-Federal share of a grant-funded project for the Commonwealth of the Northern Mariana Islands and the territories of Guam, the U.S. Virgin Islands, and American Samoa, the Regional Director must first calculate a preliminary percentage of non-Federal share in the same manner as described in paragraph (b) of this section. Following 48 U.S.C. 1469a, the Regional Director must then waive the first $200,000 of match to establish the final non-Federal match requirement for a project that includes funding from only one grant program or subprogram. If a project includes funds from more than one grant program or subprogram, the Regional Director must waive the first $200,000 of match applied to the funds for each program and subprogram.

§ 80.85 What requirements apply to match?

The requirements that apply to match include:

(a) Match may be in the form of cash or in-kind contributions.

(b) Unless authorized by Federal law, the State fish and wildlife agency or any other entity must not:

(1) Use as match Federal funds or the value of an in-kind contribution acquired with Federal funds; or

(2) Use the cost or value of an in-kind contribution to satisfy a match requirement if the cost or value has been or will be used to satisfy a match requirement of another Federal grant, cooperative agreement, or contract.

(c) The agency must fulfill match requirements at the:

(1) Grant level if the grant has funds from a single subaccount; or

(2) Subaccount level if the grant has funds from more than one subaccount.

Subpart H—General Grant Administration

§ 80.90 What are the grantee's responsibilities?

A State fish and wildlife agency as a grantee is responsible for all of the actions required by this section.

(a) Compliance with all applicable Federal, State, and local laws and regulations.

(b) Supervision to ensure that the work follows the terms of the grant, including:

(1) Proper and effective use of funds;

(2) Maintenance of records;

(3) Submission of complete and accurate Federal financial reports and performance reports by the due dates in the terms and conditions of the grant; and

(4) Regular inspection and monitoring of work in progress.

(c) Selection and supervision of personnel to ensure that:

(1) Adequate and competent personnel are available to complete the grant-funded work on schedule; and

(2) Project personnel meet time schedules, accomplish the proposed work, meet objectives, and submit the required reports.

(d) Settlement of all procurement-related contractual and administrative issues.

(e) Giving reasonable access to work sites and records by employees and contractual auditors of the Service, the Department of the Interior, and the Comptroller General of the United States.

(1) Access is for the purpose of:

(i) Monitoring progress, conducting audits, or other reviews of grant-funded projects; and

(ii) Monitoring the use of license revenue.

(2) Regulations on the uniform administrative requirements for grants awarded by the Department of the Interior describe the records that are subject to these access requirements.

(3) The closeout of an award does not affect the grantee's responsibilities described in this section.

(f) Control of all assets acquired under the grant to ensure that they serve the purpose for which acquired throughout their useful life.

§ 80.91 What is a Federal obligation of funds and how does it occur?

An obligation of funds is a legal liability to disburse funds immediately or at a later date as a result of a series of actions. All of these actions must occur to obligate funds for the formula-based grant programs authorized by the Acts:

(a) The Service sends an annual certificate of apportionment to a State fish and wildlife agency, which tells the agency how much funding is available according to formulas in the Acts.

(b) The agency sends the Regional Director an application for Federal assistance to use the funds available to it under the Acts and commits to provide the required match to carry out projects that are substantial in character and design.

(c) The Regional Director notifies the agency that he or she approves the application for Federal assistance and states the terms and conditions of the grant.

(d) The agency accepts the terms and conditions of the grant in one of the following ways:

(1) Starts work on the grant-funded project by placing an order, entering into a contract, awarding a subgrant, receiving goods or services, or otherwise incurring allowable costs during the grant period that will require payment immediately or in the future;

(2) Draws down funds for an allowable activity under the grant; or

(3) Sends the Regional Director a letter, fax, or e-mail accepting the terms and conditions of the grant.

§ 80.92 How long are funds available for a Federal obligation?

Funds are available for a Federal obligation during the fiscal year for which they are apportioned and until the close of the following fiscal year except for funds in the Enhanced Hunter Education and Safety program and the Recreational Boating Access subprogram. See §§ 80.60 and 80.61 for the length of time that funds are available in this program and subprogram.

§ 80.93 When may an agency incur costs under a grant?

A State fish and wildlife agency may incur costs under a grant from the effective date of the grant period to the end of the grant period except for preaward costs that meet the conditions in § 80.94.

§ 80.94 May an agency incur costs before the beginning of the grant period?

(a) A State fish and wildlife agency may incur costs of a proposed project before the beginning of the grant period (preaward costs). However, the agency has no assurance that it will receive reimbursement until the Regional Director awards a grant that incorporates a project statement demonstrating that the preaward costs conform to all of the conditions in paragraph (b) of this section.

(b) Preaward costs must meet the following requirements:

(1) The costs are necessary and reasonable for accomplishing the grant objectives.

(2) The Regional Director would have approved the costs if the State fish and wildlife agency incurred them during the grant period.

(3) The agency incurs these costs in anticipation of the grant and in conformity with the negotiation of the award with the Regional Director.

(4) The activities associated with the preaward costs comply with all laws, regulations, and policies applicable to a grant-funded project.

(5) The agency must:

(i) Obtain the Regional Director's concurrence that the Service will be able to comply with the applicable laws, regulations, and policies before the agency starts work on the ground; and

(ii) Provide the Service with all the information it needs with enough lead time for it to comply with the applicable laws, regulations, and policies.

(6) The agency must not complete the project before the beginning of the grant period unless the Regional Director concurs that doing so is necessary to take advantage of temporary circumstances favorable to the project or to meet legal deadlines. An agency completes a project when it incurs all costs and finishes all work necessary to achieve the project objectives.

(c) The agency can receive reimbursement for preaward costs only after the beginning of the grant period.

§ 80.95 How does an agency receive Federal grant funds?

(a) A State fish and wildlife agency may receive Federal grant funds through either:

(1) A request for reimbursement; or

(2) A request for an advance of funds if the agency maintains or demonstrates that it will maintain procedures to minimize time between transfer of funds and disbursement by the agency or its subgrantee.

(b) An agency must use the following procedures to receive a reimbursement or an advance of funds:

(1) Request funds through an electronic payment system designated by the Regional Director; or

(2) Request funds on a standard form for that purpose only if the agency is unable to use the electronic payment system.

(c) The Regional Director will reimburse or advance funds only to the office or official designated by the agency and authorized by State law to receive public funds for the State.

(d) All payments are subject to final determination of allowability based on audit or a Service review. The State fish and wildlife agency must repay any overpayment as directed by the Regional Director.

(e) The Regional Director may withhold payments pending receipt of all required reports or documentation for the project.

§ 80.96 May an agency use Federal funds without using match?

(a) The State fish and wildlife agency must not draw down any Federal funds for a grant-funded project under the Acts in greater proportion to the use of match than total Federal funds bear to total match unless:

(1) The grantee draws down Federal grant funds to pay for construction, including land acquisition;

(2) An in-kind contribution of match is not yet available for delivery to the grantee or subgrantee; or

(3) The project is not at the point where it can accommodate an in-kind contribution.

(b) If an agency draws down Federal funds in greater proportion to the use of match than total Federal funds bear to total match under the conditions described at paragraphs (a)(1) through (a)(3) of this section, the agency must:

(1) Obtain the Regional Director's prior approval, and

(2) Satisfy the project's match requirement before it submits the final Federal financial report.

§ 80.97 May an agency barter goods or services to carry out a grant-funded project?

Yes. A State fish and wildlife agency may barter to carry out a grant-funded project. A barter transaction is the exchange of goods or services for other goods or services without the use of cash. Barter transactions are subject to the Cost Principles at 2 CFR part 220, 2 CFR part 225, or 2 CFR part 230.

§ 80.98 How must an agency report barter transactions?

(a) A State fish and wildlife agency must follow the requirements in the following table when reporting barter transactions in the Federal financial report:

If * * *	Then the agency * * *
(1) The goods or services exchanged have the same market value,.	(i) Does not have to report bartered goods or services as program income or grant expenses in the Federal financial report; and (ii) Must disclose that barter transactions occurred and state what was bartered in the Remarks section of the report.
(2) The market value of the goods or services relinquished exceeds the market value of the goods and services received,.	Must report the difference in market value as grant expenses in the Federal financial report.
(3) The market value of the goods or services received exceeds the market value of the goods and services relinquished,.	Must report the difference in market value as program income in the Federal financial report.
(4) The barter transaction was part of a cooperative farming or grazing arrangement meeting the requirements in paragraph (b) of this section,.	(i) Does not have to report bartered goods or services as program income or grant expenses in the Federal financial report; and (ii) Must disclose that barter transactions occurred and identify what was bartered in the Remarks section of the Federal financial report.

(b) For purposes of paragraph (a)(4) of this section, cooperative farming or grazing is an arrangement in which an agency:

(1) Allows an agricultural producer to farm or graze livestock on land under the agency's control; and

(2) Designs the farming or grazing to advance the agency's fish and wildlife management objectives.

§ 80.99 Are symbols available to identify projects?

Yes. The following distinctive symbols are available to identify projects funded by the Acts and products on which taxes and duties have been collected to support the Acts:

(a) The symbol of the Pittman-Robertson Wildlife Restoration Act follows:

(b) The symbol of the Dingell-Johnson Sport Fish Restoration Act follows:

(c) The symbol of the Acts when used in combination follows:

§ 80.100 Does an agency have to display one of the symbols in this part on a completed project?

No. A State fish and wildlife agency does not have to display one of the symbols in § 80.99 on a project completed under the Acts. However, the Service encourages agencies to display the appropriate symbol following these requirements or guidelines:

(a) An agency may display the appropriate symbol(s) on:

(1) Areas such as wildlife-management areas, shooting ranges, and sportfishing and boating-access facilities that were acquired, developed, operated, or maintained with funds authorized by the Acts; and

(2) Printed or Web-based material or other visual representations of project accomplishments.

(b) An agency may require a subgrantee to display the appropriate symbol or symbols in the places described in paragraph (a) of this section.

(c) The Director or Regional Director may authorize an agency to use the symbols in a manner other than as described in paragraph (a) of this section.

(d) The Director or Regional Director may authorize other persons, organizations, agencies, or governments to use the symbols for purposes related to the Acts by entering into a written agreement with the user. An applicant must state how it intends to use the symbol(s), to what it will attach the symbol(s), and the relationship to the specific Act.

(e) The user of the symbol(s) must indemnify and defend the United States and hold it harmless from any claims, suits, losses, and damages from:

(1) Any allegedly unauthorized use of any patent, process, idea, method, or device by the user in connection with its use of the symbol(s), or any other alleged action of the user; and

(2) Any claims, suits, losses, and damages arising from alleged defects in the articles or services associated with the symbol(s).

(f) The appearance of the symbol(s) on projects or products indicates that the manufacturer of the product pays excise taxes in support of the respective Act(s), and that the project was funded under the respective Act(s) (26 U.S.C. 4161, 4162, 4181, 4182, 9503, and 9504). The Service and the Department of the Interior make no representation or endorsement whatsoever by the display of the symbol(s) as to the quality, utility, suitability, or safety of any product, service, or project associated with the symbol(s).

(g) No one may use any of the symbols in any other manner unless the Director or Regional Director authorizes it. Unauthorized use of the symbol(s) is a violation of 18 U.S.C. 701 and subjects the violator to possible fines and imprisonment.

Subpart I—Program Income

§ 80.120 What is program income?

(a) Program income is gross income received by the grantee or subgrantee and earned only as a result of the grant during the grant period.

(b) Program income includes revenue from:

(1) Services performed under a grant;

(2) Use or rental of real or personal property acquired, constructed, or managed with grant funds;

(3) Payments by concessioners or contractors under an arrangement with the agency or subgrantee to provide a service in support of grant objectives on real property acquired, constructed, or managed with grant funds;

(4) Sale of items produced under a grant;

(5) Royalties and license fees for copyrighted material, patents, and inventions developed as a result of a grant; or

(6) Sale of a product of mining, drilling, forestry, or agriculture during the period of a grant that supports the:

(i) Mining, drilling, forestry, or agriculture; or

(ii) Acquisition of the land on which these activities occurred.

(c) Program income does not include:

(1) Interest on grant funds, rebates, credits, discounts, or refunds;

(2) Sales receipts retained by concessioners or contractors under an arrangement with the agency to provide a service in support of grant objectives on real property acquired, constructed, or managed with grant funds;

(3) Cash received by the agency or by volunteer instructors to cover incidental costs of a class for hunter or aquatic-resource education;

(4) Cooperative farming or grazing arrangements as described at § 80.98; or

(5) Proceeds from the sale of real property.

§ 80.121 May an agency earn program income?

A State fish and wildlife agency may earn income from activities incidental to the grant purposes as long as producing income is not a primary purpose. The agency must account for income received from these activities in the project records and dispose of it according to the terms of the grant.

§ 80.122 May an agency deduct the costs of generating program income from gross income?

(a) A State fish and wildlife agency may deduct the costs of generating program income from gross income when it calculates program income as long as the agency does not:

(1) Pay these costs with:

(i) Federal or matching cash under a Federal grant; or

(ii) Federal cash unrelated to a grant.

(2) Cover these costs by accepting:

(i) Matching in-kind contributions for a Federal grant; or

(ii) Donations of services, personal property, or real property unrelated to a Federal grant.

(b) Examples of costs of generating program income that may qualify for deduction from gross income if they are consistent with paragraph (a) of this section are:

(1) Cost of estimating the amount of commercially acceptable timber in a forest and marking it for harvest if the commercial harvest is incidental to a grant-funded habitat-management or facilities-construction project.

(2) Cost of publishing research results as a pamphlet or book for sale if the publication is incidental to a grant-funded research project.

§ 80.123 How may an agency use program income?

(a) A State fish and wildlife agency may choose any of the three methods listed in paragraph (b) of this section for applying program income to Federal and non-Federal outlays. The agency may also use a combination of these methods. The method or methods that the agency chooses will apply to the program income that it earns during the grant period and to the program income that any subgrantee earns during the grant period. The agency must indicate the method that it wants to use in the project statement that it submits with each application for Federal assistance.

(b) The three methods for applying program income to Federal and non-Federal outlays are in the following table:

Method	Requirements for using the method
(1) Deduction	(i) The agency must deduct the program income from total allowable costs to determine the net allowable costs. (ii) The agency must use program income for current costs under the grant unless the Regional Director authorizes otherwise. (iii) If the agency does not indicate the method that it wants to use in the project statement, then it must use the deduction method.
(2) Addition	(i) The agency may add the program income to the Federal and matching funds under the grant. (ii) The agency must use the program income for the purposes of the grant and under the terms of the grant.
(3) Matching	(i) The agency must request the Regional Director's approval in the project statement. (ii) The agency must explain in the project statement how the agency proposes to use the program income, the expected results, and why it is essential to use program income as match. (iii) The Regional Director may approve the use of the matching method if the requirements of paragraph (c) of this section are met.

(c) The Regional Director may approve the use of the matching method if the proposed use of the program income would:

(1) Be consistent with the intent of the applicable Act or Acts; and

(2) Result in at least one of the following:

(i) The agency substitutes program income for at least some of the match that it would otherwise have to provide, and then uses this saved match for other fish or wildlife-related projects;

(ii) The agency substitutes program income for at least some of the apportioned Federal funds, and then uses the saved Federal funds for additional eligible activities under the program; or

(iii) A net benefit to the program.

§ 80.124 How may an agency use unexpended program income?

If a State fish and wildlife agency has unexpended program income on its final Federal financial report, it may use the income under a subsequent grant for any activity eligible for funding in the grant program that generated the income.

§ 80.125 How must an agency treat income that it earns after the grant period?

(a) The State fish and wildlife agency must treat program income that it earns after the grant period as either:

(1) License revenue for the administration of the agency; or

(2) Additional funding for purposes consistent with the grant or the program.

(b) The agency must indicate its choice of one of the alternatives in paragraph (a) of this section in the project statement that the agency submits with each application for Federal assistance. If the agency does not record its choice in the project statement, the agency must treat the income earned after the grant period as license revenue.

§ 80.126 How must an agency treat income earned by a subgrantee after the grant period?

(a) The State fish and wildlife agency must treat income earned by a subgrantee after the grant period as:

(1) License revenue for the administration of the agency;

(2) Additional funding for purposes consistent with the grant or the program; or

(3) Income subject only to the terms of the subgrant agreement and any subsequent contractual agreements between the agency and the subgrantee.

(b) The agency must indicate its choice of one of the above alternatives in the project statement that it submits with each application for Federal assistance. If the agency does not indicate its choice in the project statement, the subgrantee does not have to account for any income that it earns after the grant period unless required to do so in the subgrant agreement or in any subsequent contractual agreement.

Subpart J—Real Property

§ 80.130 Does an agency have to hold title to real property acquired under a grant?

A State fish and wildlife agency must hold title to an ownership interest in real property acquired under a grant to the extent possible under State law.

(a) Some States do not authorize their fish and wildlife agency to hold the title to real property that the agency manages. In these cases, the State or one of its administrative units may hold the title to grant-funded real property as long as the agency has the authority to manage the real property for its authorized purpose under the grant. The agency, the State, or another administrative unit of State government must not hold title to an undivided ownership interest in the real property concurrently with a subgrantee or any other entity.

(b) An ownership interest is an interest in real property that gives the person who holds it the right to use and occupy a parcel of land or water and to exclude others. Ownership interests include fee and leasehold interests but not easements.

§ 80.131 Does an agency have to hold an easement acquired under a grant?

A State fish and wildlife agency must hold an easement acquired under a grant, but it may share certain rights or responsibilities as described in paragraph (b) of this section if consistent with State law.

(a) Any sharing of rights or responsibilities does not diminish the agency's responsibility to manage the easement for its authorized purpose.

(b) The agency may share holding or enforcement of an easement only in the following situations:

(1) The State or another administrative unit of State government may hold an easement on behalf of its fish and wildlife agency.

(2) The agency may subgrant the concurrent right to hold the easement to a nonprofit organization or to a local or tribal government. A concurrent right to hold an easement means that both the State agency and the subgrantee hold the easement and share its rights and responsibilities.

(3) The agency may subgrant a right of enforcement to a nonprofit organization or to a local or tribal government. This right of enforcement may allow the subgrantee to have reasonable access and entry to property protected under the easement for purposes of inspection, monitoring, and enforcement. The subgrantee's right of enforcement must not supersede and must be concurrent with the agency's right of enforcement.

§ 80.132 Does an agency have to control the land or water where it completes capital improvements?

Yes. A State fish and wildlife agency must control the parcel of land and water on which it completes a grant-funded capital improvement. An agency must exercise this control by holding title to a fee or leasehold interest or through another legally binding agreement. Control must be adequate for the protection, maintenance, and use of the improvement for its authorized purpose during its useful life even if the agency did not acquire the parcel with grant funds.

§ 80.133 Does an agency have to maintain acquired or completed capital improvements?

Yes. A State fish and wildlife agency is responsible for maintaining capital improvements acquired or completed under a grant to ensure that each capital improvement continues to serve its authorized purpose during its useful life.

§ 80.134 How must an agency use real property?

(a) If a grant funds acquisition of an interest in a parcel of land or water, the State fish and wildlife agency must use it for the purpose authorized in the grant.

(b) If a grant funds construction of a capital improvement, the agency must use the capital improvement for the purpose authorized in the grant during the useful life of the capital improvement. The agency must do this even if it did not use grant funds to:

(1) Acquire the parcel on which the capital improvement is located; or

(2) Build the structure in which the capital improvement is a component.

(c) If a grant funds management, operation, or maintenance of a parcel of land or water, or a capital improvement, the agency must use it for the purpose authorized in the grant during the grant period. The agency must do this even if it did not acquire the parcel or construct the capital improvement with grant funds.

(d) A State agency may allow commercial, recreational, and other secondary uses of a grant-funded parcel of land or water or capital improvement if these secondary uses do not interfere with the authorized purpose of the grant.

§ 80.135 What if an agency allows a use of real property that interferes with its authorized purpose?

(a) When a State fish and wildlife agency allows a use of real property that interferes with its authorized purpose under a grant, the agency must fully restore the real property to its authorized purpose.

(b) If the agency cannot fully restore the real property to its authorized purpose, it must replace the real property using non-Federal funds.

(c) The agency must determine that the replacement property:

(1) Is of at least equal value at current market prices; and

(2) Has fish, wildlife, and public-use benefits consistent with the purposes of the original grant.

(d) The Regional Director may require the agency to obtain an appraisal and appraisal review to estimate the value of the replacement property at current market prices if the agency cannot support its assessment of value.

(e) The agency must obtain the Regional Director's approval of:

(1) Its determination of the value and benefits of the replacement property; and

(2) The documentation supporting this determination.

(f) The agency may have a reasonable time, up to 3 years from the date of notification by the Regional Director, to restore the real property to its authorized purpose or acquire replacement property. If the agency does not restore the real property to its authorized purpose or acquire replacement property within 3 years, the Director may declare the agency ineligible to receive new grants in the program or programs that funded the original acquisition.

§ 80.136 Is it a diversion if an agency does not use grant-acquired real property for its authorized purpose?

If a State fish and wildlife agency does not use grant-acquired real property for its authorized purpose, a diversion occurs only if both of the following conditions apply:

(a) The agency used license revenue as match for the grant; and

(b) The unauthorized use is for a purpose other than management of the fish- and wildlife-related resources for which the agency has authority under State law.

§ 80.137 What if real property is no longer useful or needed for its original purpose?

If the director of the State fish and wildlife agency and the Regional Director jointly decide that grant-funded real property is no longer useful or needed for its original purpose under the grant, the director of the agency must:

(a) Propose another eligible purpose for the real property under the grant program and ask the Regional Director to approve this proposed purpose, or

(b) Request disposition instructions for the real property under the process described at 43 CFR 12.71, ''Administrative and Audit Requirements and Cost Principles for Assistance Programs.''

Subpart K—Revisions and Appeals

§ 80.150 How does an agency ask for revision of a grant?

(a) A State fish and wildlife agency must ask for revision of a project or grant by sending the Service the following documents:

(1) The standard form approved by the Office of Management and Budget as an application for Federal assistance. The agency may use this form to update or request a change in the information that it submitted in an approved application. The director of the agency or his or her designee must sign this form.

(2) A statement attached to the application for Federal assistance that explains:

(i) How the requested revision would affect the information that the agency

submitted with the original grant application; and

(ii) Why the requested revision is necessary.

(b) An agency must send any requested revision of the purpose or objectives of a project or grant to the State Clearinghouse or Single Point of Contact if the State maintains this process under Executive Order 12372, Intergovernmental Review of Federal Programs.

§ 80.151 May an agency appeal a decision?

An agency may appeal the Director's or Regional Director's decision on any matter subject to this part.

(a) The State fish and wildlife agency must send the appeal to the Director within 30 days of the date that the Director or Regional Director mails or otherwise informs an agency of a decision.

(b) The agency may appeal the Director's decision under paragraph (a) of this section to the Secretary within 30 days of the date that the Director mailed the decision. An appeal to the Secretary must follow procedures in 43 CFR part 4, subpart G, ''Special Rules Applicable to other Appeals and Hearings.''

Subpart L—Information Collection

§ 80.160 What are the information collection requirements of this part?

(a) This part requires each State fish and wildlife agency to provide the following information to the Service. The State agency must:

(1) Certify the number of people who have paid licenses to hunt and the number of people who have paid licenses to fish in a State during the State-specified certification period (OMB control number 1018–0007).

(2) Provide information for a grant application on a Governmentwide standard form (OMB control number 4040–0002).

(3) Certify on a Governmentwide standard form that it:

(i) Has the authority to apply for the grant;

(ii) Has the capability to complete the project; and

(iii) Will comply with the laws, regulations, and policies applicable to nonconstruction projects, construction projects, or both (OMB control numbers 4040–0007 and 4040–0009).

(4) Provide a project statement that describes the need, purpose and objectives, results or benefits expected, approach, geographic location, explanation of costs, and other information that demonstrates that the project is eligible under the Acts and meets the requirements of the Federal Cost Principles and the laws, regulations, and policies applicable to the grant program (OMB control number 1018–0109).

(5) Change or update information provided to the Service in a previously approved application (OMB control number 1018–0109).

(6) Report on a Governmentwide standard form on the status of Federal grant funds and any program income earned (OMB control number 0348–0061).

(7) Report as a grantee on progress in completing the grant-funded project (OMB control number 1018–0109).

(b) The authorizations for information collection under this part are in the Acts and in 43 CFR part 12, subpart C, ''Uniform Administrative Requirements for Grants and Cooperative Agreements to State and Local Governments.''

(c) Send comments on the information collection requirements to: U.S. Fish and Wildlife Service, Information Collection Clearance Officer, 4401 North Fairfax Drive, MS 2042–PDM, Arlington, VA 22203.

Dated July 19, 2011.

Rachel Jacobson,

Acting Assistant Secretary for Fish and Wildlife and Parks.

[FR Doc. 2011–19206 Filed 7–29–11; 8:45 am]

BILLING CODE 4310–55–P

FEDERAL REGISTER

Vol. 76 Monday,

No. 147 August 1, 2011

Part V

Environmental Protection Agency

Sixty-Eighth Report of the TSCA Interagency Testing Committee to the Administrator of the Environmental Protection Agency; Receipt of Report and Request for Comments; Notice

ENVIRONMENTAL PROTECTION AGENCY

[EPA–HQ–OPPT–2011–0437; FRL–8879–3]

Sixty-Eighth Report of the TSCA Interagency Testing Committee to the Administrator of the Environmental Protection Agency; Receipt of Report and Request for Comments

AGENCY: Environmental Protection Agency (EPA).

ACTION: Notice.

SUMMARY: The Toxic Substances Control Act (TSCA) Interagency Testing Committee (ITC) transmitted its Sixty-Eighth Report to the Administrator of EPA on June 14, 2011. In the 68th ITC Report, which is included with this notice, the ITC is adding cadmium and 103 cadmium compounds to TSCA section 4(e) *Priority Testing List.* During this reporting period (December 2010 to May 2011), the ITC is also removing 29 High Production Volume (HPV) Challenge Program orphan chemicals and lead and 11 lead compounds from the *Priority Testing List.*

DATES: Comments must be received on or before August 31, 2011.

ADDRESSES: Submit your comments, identified by docket identification (ID) number EPA–HQ–OPPT–2011–0437, by one of the following methods:

- *Federal eRulemaking Portal: http://www.regulations.gov.* Follow the on-line instructions for submitting comments.
- *Mail:* Document Control Office (7407M), Office of Pollution Prevention and Toxics (OPPT), Environmental Protection Agency, 1200 Pennsylvania Ave., NW., Washington, DC 20460–0001.
- *Hand Delivery:* OPPT Document Control Office (DCO), EPA East Bldg., Rm. 6428, 1201 Constitution Ave., NW., Washington, DC. Attention: Docket ID Number EPA–HQ–OPPT–2011–0437. The DCO is open from 8 a.m. to 4 p.m., Monday through Friday, excluding legal holidays. The telephone number for the DCO is (202) 564–8930. Such deliveries are only accepted during the DCO's normal hours of operation, and special arrangements should be made for deliveries of boxed information.

Instructions: Direct your comments to docket ID number EPA–HQ–OPPT–2011–0437. EPA's policy is that all comments received will be included in the docket without change and may be made available on-line at *http://www.regulations.gov,* including any personal information provided, unless the comment includes information claimed to be Confidential Business Information (CBI) or other information whose disclosure is restricted by statute. Do not submit information that you consider to be CBI or otherwise protected through regulations.gov or e-mail. The regulations.gov Web site is an ''anonymous access'' system, which means EPA will not know your identity or contact information unless you provide it in the body of your comment. If you send an e-mail comment directly to EPA without going through regulations.gov, your e-mail address will be automatically captured and included as part of the comment that is placed in the docket and made available on the Internet. If you submit an electronic comment, EPA recommends that you include your name and other contact information in the body of your comment and with any disk or CD–ROM you submit. If EPA cannot read your comment due to technical difficulties and cannot contact you for clarification, EPA may not be able to consider your comment. Electronic files should avoid the use of special characters, any form of encryption, and be free of any defects or viruses.

Docket: All documents in the docket are listed in the docket index available at *http://www.regulations.gov.* Although listed in the index, some information is not publicly available, *e.g.,* CBI or other information whose disclosure is restricted by statute. Certain other material, such as copyrighted material, will be publicly available only in hard copy. Publicly available docket materials are available electronically at *http://www.regulations.gov,* or, if only available in hard copy, at the OPPT Docket. The OPPT Docket is located in the EPA Docket Center (EPA/DC) at Rm. 3334, EPA West Bldg., 1301 Constitution Ave., NW., Washington, DC. The EPA/DC Public Reading Room hours of operation are 8:30 a.m. to 4:30 p.m., Monday through Friday, excluding legal holidays. The telephone number of the EPA/DC Public Reading Room is (202) 566–1744, and the telephone number for the OPPT Docket is (202) 566–0280. Docket visitors are required to show photographic identification, pass through a metal detector, and sign the EPA visitor log. All visitor bags are processed through an X-ray machine and subject to search. Visitors will be provided an EPA/DC badge that must be visible at all times in the building and returned upon departure.

FOR FURTHER INFORMATION CONTACT: *For technical information contact:* John D. Walker, Interagency Testing Committee (7401M), Office of Pollution Prevention and Toxics, Environmental Protection Agency, 1200 Pennsylvania Ave., NW., Washington, DC 20460–0001; telephone number: (202) 564–7527; fax number: (202) 564–7528; e-mail address: *walker.johnd@epa.gov.*

For general information contact: The TSCA–Hotline, ABVI–Goodwill, 422 South Clinton Ave., Rochester, NY 14620; telephone number: (202) 554–1404; e-mail address: *TSCA-Hotline@epa.gov.*

SUPPLEMENTARY INFORMATION:

I. General Information

A. Does this action apply to me?

This notice is directed to the public in general. It may, however, be of particular interest to you if you manufacture (defined by statute to include import) and/or process TSCA-covered chemicals and you may be identified by the North American Industrial Classification System (NAICS) codes 325 and 32411. Because this notice is directed to the general public and other entities may also be interested, the Agency has not attempted to describe all the specific entities that may be interested in this action. If you have any questions regarding the applicability of this action to a particular entity, consult the technical person listed under **FOR FURTHER INFORMATION CONTACT.**

B. What should I consider as I prepare my comments for EPA?

1. *Submitting CBI.* Do not submit this information to EPA through regulations.gov or e-mail. Clearly mark the part or all of the information that you claim to be CBI. For CBI information in a disk or CD–ROM that you mail to EPA, mark the outside of the disk or CD–ROM as CBI and then identify electronically within the disk or CD–ROM the specific information that is claimed as CBI. In addition to one complete version of the comment that includes information claimed as CBI, a copy of the comment that does not contain the information claimed as CBI must be submitted for inclusion in the public docket. Information so marked will not be disclosed except in accordance with procedures set forth in 40 CFR part 2.

2. *Tips for preparing your comments.* When submitting comments, remember to:

i. Identify the document by docket ID number and other identifying information (subject heading, **Federal Register** date and page number).

ii. Follow directions. The Agency may ask you to respond to specific questions or organize comments by referencing a Code of Federal Regulations (CFR) part or section number.

iii. Explain why you agree or disagree; suggest alternatives and substitute language for your requested changes.

iv. Describe any assumptions and provide any technical information and/or data that you used.

v. If you estimate potential costs or burdens, explain how you arrived at your estimate in sufficient detail to allow for it to be reproduced.

vi. Provide specific examples to illustrate your concerns and suggest alternatives.

vii. Explain your views as clearly as possible, avoiding the use of profanity or personal threats.

viii. Make sure to submit your comments by the comment period deadline identified.

II. Background

The Toxic Substances Control Act (TSCA) (15 U.S.C. 260l *et seq.*) authorizes the Administrator of EPA to promulgate regulations under TSCA section 4(a) requiring testing of chemicals and chemical groups in order to develop data relevant to determining the risks that such chemicals and chemical groups may present to health or the environment. Section 4(e) of TSCA established the ITC to recommend chemicals and chemical groups to the Administrator of EPA for priority testing consideration. Section 4(e) of TSCA directs the ITC to revise the TSCA section 4(e) *Priority Testing List* at least every 6 months.

You may access additional information about the ITC at *http://www.epa.gov/opptintr/itc.*

A. The 68th ITC Report

The ITC is adding cadmium and 103 cadmium compounds to the TSCA section 4(e) *Priority Testing List.* During this reporting period (December 2010 to May 2011), the ITC is also removing 29 HPV Challenge Program orphan chemicals and lead and 11 lead compounds from the *Priority Testing List.*

B. Status of the Priority Testing List

The *Priority Testing List* includes 2 alkylphenols, 16 chemicals with insufficient dermal absorption rate data, 178 HPV Challenge Program orphan chemicals, and cadmium and 103 cadmium compounds.

List of Subjects

Environmental protection, Chemicals, Hazardous substances.

Dated: July 25, 2011.

Wendy C. Hamnett,

Director, Office of Pollution Prevention and Toxics.

Sixty-Eighth Report of the TSCA Interagency Testing Committee to the Administrator of the Environmental Protection Agency

Table of Contents

Summary
I. Background
II. TSCA Section 8 Reporting
A. TSCA Section 8 Reporting Rules
B. ITC's Use of TSCA Section 8 and Other Information
C. New Request to Add Chemicals to the TSCA Section 8(d) HaSDR Rule
III. ITC's Activities During this Reporting Period (December 2010 to May 2011)
IV. Revisions to the TSCA Section 4(e) *Priority Testing List*
A. Chemicals Added to the *Priority Testing List:* Cadmium and Cadmium Compounds
B. Chemicals Removed from the *Priority Testing List*
1. HPV Challenge Program orphan chemicals
2. Lead and lead compounds
V. References
VI. The TSCA Interagency Testing Committee

Summary

The ITC is adding cadmium and 103 cadmium compounds to the Toxic Substances Control Act (TSCA) section 4(e) *Priority Testing List* during this reporting period (December 2010 to May 2011). In addition, the ITC is removing 29 HPV Challenge Program orphan chemicals, lead and 11 lead compounds from the *Priority Testing List* during this reporting period.

The TSCA section 4(e) *Priority Testing List* is Table 1 of this unit.

TABLE 1—TSCA SECTION 4(E) PRIORITY TESTING LIST (MAY 2011)

ITC Report No.	Date	Chemical name/group	Action
31	January 1993	2 Chemicals with insufficient dermal absorption rate data, methylcyclohexane and cyclopentane.	Designated.
32	May 1993	10 Chemicals with insufficient dermal absorption rate data	Designated.
35	November 1994	4 Chemicals with insufficient dermal absorption rate data, cyclopentadiene, formamide, 1,2,3-trichloropropane and m-nitrotoluene.	Designated.
37	November 1995	Branched 4-nonylphenol (mixed isomers)	Recommended.
41	November 1997	Phenol, 4-(1,1,3,3-tetramethylbutyl)-	Recommended.
55	December 2004	175 High Production Volume (HPV) Challenge Program orphan chemicals	Recommended.
56	August 2005	3 HPV Challenge Program orphan chemicals	Recommended.
68	May 2011	Cadmium and 103 cadmium compounds	Recommended.

I. Background

The ITC was established by TSCA section 4(e) ''to make recommendations to the Administrator respecting the chemical substances and mixtures to which the Administrator should give priority consideration for the promulgation of rules for testing under section 4(a)* * *. At least every six months * * *, the Committee shall make such revisions to the *Priority Testing List* as it determines to be necessary and transmit them to the Administrator together with the Committee's reasons for the revisions'' (Pub. L. 94–469, 90 Stat. 2003 *et seq.,* 15 U.S.C. 2601 *et seq.*). ITC reports are available from regulations.gov (*http://www.regulations.gov*) after publication in the **Federal Register**. The ITC produces its revisions to the *Priority Testing List* with administrative and technical support from the ITC staff, ITC members, and their U.S. Government organizations, and contract support provided by EPA. ITC members and staff are listed at the end of this report.

II. TSCA Section 8 Reporting

A. TSCA Section 8 Reporting Rules

Following receipt of the ITC's report (and the revised *Priority Testing List*) by the EPA Administrator, the EPA's Office of Pollution Prevention and Toxics (OPPT) may add the chemicals from the revised *Priority Testing List* to the TSCA section 8(a) Preliminary Assessment Information Reporting (PAIR) or the TSCA section 8(d) Health and Safety Data Reporting (HaSDR) rules. The PAIR rule requires manufacturers (including importers) of chemicals added to the

Priority Testing List to submit to EPA certain production and exposure information (*http://www.epa.gov/oppt/chemtest/pubs/pairform.pdf*). The HaSDR rule requires manufacturers (including importers) of chemicals added to the *Priority Testing List* to submit unpublished health and safety studies to EPA.

B. ITC's Use of TSCA Section 8 and Other Information

The ITC's use of TSCA section 8 and other information is described in the ITC's 52nd Report (Ref. 1).

C. New Request To Add Chemicals to the TSCA Section 8(d) HaSDR Rule

The ITC is requesting that EPA add the category of cadmium and cadmium compounds, including specifically cadmium and 103 cadmium compounds to the TSCA section 8(d) HaSDR rule. Cadmium and cadmium compounds are discussed in Unit IV. of this report.

III. ITC's Activities During This Reporting Period (December 2010 to May 2011)

During this reporting period, the ITC discussed the draft TSCA section 4 proposed test rule, draft TSCA section 8(a) proposed reporting rule, and draft proposed TSCA section 5(a) Significant New Use Rule for nanoscale materials. In addition, the ITC discussed adding cadmium and cadmium compounds to the *Priority Testing List* and removing HPV Challenge Program orphan chemicals and lead and lead compounds from the *Priority Testing List.*

IV. Revisions to the TSCA Section 4(e) Priority Testing List

A. Chemicals Added to the Priority Testing List: Cadmium and Cadmium Compounds

1. *Recommendation.* EPA requests that the ITC add the category ''cadmium and cadmium compounds'' to the *Priority Testing List* to obtain use and exposure information on cadmium and cadmium compounds that are present in any consumer product.

Required information would be limited to unpublished health and safety studies, including those relating to the cadmium content in consumer products containing cadmium or cadmium compounds, and/or studies that assess exposure to cadmium or cadmium compounds from such products. Exposure studies include any studies providing information about the solubility, bioavailability, and duration of exposure to cadmium or cadmium compounds from product use.

2. *Rationale for recommendation.* EPA and the Consumer Product Safety Commission (CPSC) are concerned with the content of cadmium or cadmium compounds in certain children's toys, jewelry, and other consumer products due to known toxicity and health concerns from exposure to cadmium or cadmium compounds. CPSC and EPA have limited health and safety studies on the content of cadmium or cadmium compounds in consumer products. EPA is recommending that the ITC include the category listing for cadmium and cadmium compounds described in this unit. This will provide both EPA and CPSC with a streamlined means of obtaining studies. Information obtained on this category may assist both EPA and CPSC in taking further action as appropriate to protect consumers from exposure to cadmium or cadmium compounds in consumer products.

3. *Supporting information.* The acute (short-term) effects of cadmium in humans through inhalation exposure consist mainly of effects on the lung, such as pulmonary irritation. Chronic (long-term) inhalation or oral exposure to cadmium leads to a build-up of cadmium in the kidneys that can cause kidney disease.

Cadmium has been shown to be a developmental toxicant in animals, resulting in fetal malformations and other effects, but no conclusive evidence exists in humans. Animal studies have demonstrated an increase in lung cancer from long-term inhalation exposure to cadmium.[1] EPA has classified cadmium as a Group B1, probable human carcinogen (*http://epa.gov/ttn/atw/hlthef/cadmium.html*).

Cadmium has been found in certain consumer products: In 2010, CPSC found the amount of cadmium in samples of children's metal jewelry ranged from about 0.03 to 99% by weight. CPSC also assessed potential exposures to cadmium by extraction testing, including using an acid solution to simulate the effect of stomach acid. The CPSC Staff found that potential exposure to cadmium would exceed the acceptable daily intake levels for acute exposure to a child. CPSC recalled 26 items of jewelry in 4 separate recalls and issued a warning about 2 additional jewelry items.[2] Cadmium was also found in the paint on glassware. CPSC issued a voluntary recall of 12 million ''Shrek'' movie themed collectable drinking glasses.[3]

Due to the potential health effects of exposure to cadmium or cadmium compounds, EPA and CPSC are concerned about the possible presence and bioavailability of cadmium or cadmium compounds in consumer products generally. However, neither CPSC nor EPA currently has complete information for assessing the safety of any other consumer products that may contain cadmium or cadmium compounds.

4. *Information needs.* EPA needs health and safety studies for assessing the extent and degree of exposure and potential hazard associated with these substances including: Epidemiological or clinical studies, occupational exposure and health effects studies, ecological effects studies, and environmental fate studies (including relevant physical chemical properties).

Specifically EPA needs studies about the total amount of cadmium or cadmium compounds contained in a product, the solubility and bioavailability of cadmium or cadmium compounds (including accessibility of cadmium or cadmium compounds to children and studies of the age and foreseeable behavior of children exposed to a product for children and/or children's toys), the foreseeable duration and route of potential cadmium or cadmium compounds exposure through contact with products, and studies on the marketing, patterns of use, and lifecycle of cadmium-containing products.

TABLE 2—CADMIUM AND CADMIUM COMPOUNDS BEING ADDED TO THE PRIORITY TESTING LIST

CAS No.	Cadmium and cadmium compounds
506–82–1	Cadmium, dimethyl-

[1] ATSDR Toxicological Profile for Cadmium (Draft). Agency for Toxic Substances and Disease Registry. U.S. Department of Health and Human Services. 2008. Available on-line at: *http://www.atsdr.cdc.gov/substances/toxsubstance.asp?toxid=15.*

[2] CPSC. Staff Briefing Package. Petition HP 10–2. Requesting Restriction of Cadmium in Toy Jewelry Consumer Product Safety Commission. February 9, 2011. Staff Report, Cadmium in Children's Metal Jewelry. Toxicity Review of Cadmium. TAB B pp. 19–39. October 14, 2010. Available on-line at: *http://www.cpsc.gov/library/foia/foia11/brief/cadmiumpet.pdf.*

[3] McDonald's Recalls Movie Themed Drinking Glasses Due to Potential Cadmium Risk. Available on-line at: *http://www.cpsc.gov/CPSCPUB/PREREL/prhtml10/10257.html.* Last visited March 4, 2011.

TABLE 2—CADMIUM AND CADMIUM COMPOUNDS BEING ADDED TO THE PRIORITY TESTING LIST—Continued

CAS No.	Cadmium and cadmium compounds
513–78–0	Carbonic acid, cadmium salt (1:1)
542–83–6	Cadmium cyanide ($Cd(CN)_2$)
543–90–8	Acetic acid, cadmium salt (2:1)
592–02–9	Cadmium, diethyl-
1306–19–0	Cadmium oxide (CdO)
1306–23–6	Cadmium sulfide (CdS)
1306–24–7	Cadmium selenide (CdSe)
1306–25–8	Cadmium telluride (CdTe)
2191–10–8	Octanoic acid, cadmium salt (2:1)
2223–93–0	Octadecanoic acid, cadmium salt (2:1)
2420–97–5	Benzoic acid, 4-methyl-, cadmium salt (2:1)
2420–98–6	Hexanoic acid, 2-ethyl-, cadmium salt (2:1)
2847–16–7	Decanoic acid, cadmium salt (2:1)
3026–22–0	Benzoic acid, cadmium salt (2:1)
4167–05–9	Benzoic acid, 4-(1,1-dimethylethyl)-, cadmium salt (2:1)
4464–23–7	Formic acid, cadmium salt
5112–16–3	Nonanoic acid, cadmium salt (2:1)
6427–86–7	Hexadecanoic acid, cadmium salt (2:1)
7440–43–9	Cadmium
7789–42–6	Cadmium bromide ($CdBr_2$)
7790–79–6	Cadmium fluoride (CdF_2)
7790–80–9	Cadmium iodide (CdI_2)
7790–85–4	Cadmium tungsten oxide ($CdWO_4$)
10108–64–2	Cadmium chloride ($CdCl_2$)
10124–36–4	Sulfuric acid, cadmium salt (1:1)
10196–67–5	Tetradecanoic acid, cadmium salt (2:1)
10325–94–7	Nitric acid, cadmium salt (2:1)
10326–28–0	Perchloric acid, cadmium salt, hexahydrate
10468–30–1	9-Octadecenoic acid (9Z)-, cadmium salt (2:1)
12006–15–4	Cadmium arsenide (Cd_3As_2)
12014–28–7	Cadmium phosphide (Cd_3P_2)
12014–29–8	Antimony, compd. with cadmium (2:3)
12139–22–9	Cadmium peroxide ($Cd(O_2)$)
12139–23–0	Cadmium zirconium oxide ($CdZrO_3$)
12185–64–7	Cadmium chloride phosphate ($Cd_5Cl(PO_4)_3$)
12187–14–3	Cadmium niobium oxide ($Cd_2Nb_2O_7$)
12292–07–8	Cadmium tantalum oxide ($CdTa_2O_6$)
12442–27–2	Cadmium zinc sulfide ((Cd,Zn)S)
12626–36–7	Cadmium selenide sulfide (Cd(Se,S))
13477–17–3	Phosphoric acid, cadmium salt (2:3)
13477–19–5	Silicic acid (H_2SiO_3), cadmium salt (1:1)
13814–59–0	Selenious acid, cadmium salt (1:1)
13847–17–1	Phosphoric acid, cadmium salt (1:?)
14017–36–8	Sulfamic acid, cadmium salt (2:1)
14486–19–2	Borate(1-), tetrafluoro-, cadmium (2:1)
14520–70–8	Phosphoric acid, ammonium cadmium salt (1:1:1)
15600–62–1	Diphosphoric acid, cadmium salt (1:2)
15851–44–2	Telluric acid (H_2TeO_3), cadmium salt (1:1)
15852–14–9	Telluric acid (H_2TeO_4), cadmium salt (1:1)
16056–72–7	Cadmium vanadium oxide (CdV_2O_6)
19262–93–2	Diphosphoric acid, cadmium salt (1:?)
21041–95–2	Cadmium hydroxide ($Cd(OH)_2$)
27476–27–3	Benzoic acid, methyl-, cadmium salt (2:1)
29870–72–2	Cadmium mercury telluride ((Cd,Hg)Te)
34303–23–6	Docosanoic acid, cadmium salt (2:1)
51222–60–7	Boric acid, cadmium salt
52337–78–7	Benzoic acid, 2-methyl-, cadmium salt (2:1)
61789–34–2	Naphthenic acids, cadmium salts
68092–45–5	Benzoic acid, 3-methyl-, cadmium salt (2:1)
68131–58–8	Fatty acids, C10–18, cadmium salts
68131–59–9	Fatty acids, C12–18, cadmium salts
68332–81–0	Cadmium zinc sulfide ((Cd,Zn)S), copper and lead-doped
68409–82–5	Fatty acids, C14–18, cadmium salts
68478–53–5	Cadmium, benzoate p-tert-butylbenzoate complexes
68479–13–0	Pyrochlore, bismuth cadmium ruthenium
68512–49–2	Cadmium zinc sulfide ((Cd,Zn)S), copper chloride-doped
68512–50–5	Cadmium zinc sulfide ((Cd,Zn)S), copper and manganese-doped
68512–51–6	Cadmium zinc sulfide ((Cd,Zn)S), aluminum and copper-doped
68583–43–7	Cadmium zinc sulfide ((Cd,Zn)S), copper and silver-doped
68583–44–8	Cadmium zinc sulfide ((Cd,Zn)S), nickel and silver-doped
68583–45–9	Cadmium zinc sulfide ((Cd,Zn)S), silver chloride-doped

TABLE 2—CADMIUM AND CADMIUM COMPOUNDS BEING ADDED TO THE PRIORITY TESTING LIST—Continued

CAS No.	Cadmium and cadmium compounds
68584–41–8	Cadmium zinc sulfide ((Cd,Zn)S), aluminum and silver-doped
68584–42–9	Cadmium zinc sulfide ((Cd,Zn)S), copper and nickel-doped
68784–10–1	Cadmium zinc sulfide ((Cd,Zn)S), aluminum and cobalt and copper and silver-doped
68784–55–4	Barium cadmium calcium chloride fluoride phosphate, antimony and manganese-doped
68784–58–7	Cadmium borate oxide ($Cd_3(BO_2)_4O$), manganese-doped
68855–80–1	Fatty acids, tall-oil, cadmium salts
68876–84–6	Fatty acids, C8–18 and C18-unsatd., cadmium salts
68876–90–4	Barium cadmium zinc sulfide ($Ba_2(Cd,Zn)S_3$), manganese-doped
68876–98–2	Cadmium sulfide (CdS), aluminum and copper-doped
68876–99–3	Cadmium sulfide (CdS), aluminum and silver-doped
68877–00–9	Cadmium sulfide (CdS), copper chloride-doped
68877–01–0	Cadmium sulfide (CdS), silver chloride-doped
68891–87–2	Cadmium sulfide (CdS), copper and lead-doped
68953–39–9	Fatty acids, tallow, hydrogenated, cadmium salts
68954–18–7	Cadmium, laurate palmitate stearate complexes
68956–81–0	Resin acids and Rosin acids, cadmium salts
69011–66–1	Bismuth alloy, nonbase, Bi,Cd, dross
69011–67–2	Bismuth alloy, nonbase, Bi,Cd,In, dross
69011–69–4	Cadmium, dross
69011–70–7	Cadmium, sponge
69012–57–3	Flue dust, cadmium-refining
69029–63–6	Calcines, cadmium residue
69029–70–5	Leach residues, cadmium-refining
69029–77–2	Residues, cadmium-refining
70084–75–2	Fatty acids, C12–18, barium cadmium salts
71243–75–9	Cadmium selenide sulfide (CdSe0.53S0.47)
72828–62–7	Zircon, cadmium red
72869–26–2	Cadmium zinc sulfide ((Cd,Zn)S), cobalt and copper-doped
72869–63–7	Fatty acids, coco, cadmium salts
72968–34–4	Zircon, cadmium yellow
93894–08–7	Phenol, 4-nonyl-, cadmium salt (2:1)
135742–32–4	Fatty acids, C6–12, cadmium salts

B. Chemicals Removed From the Priority Testing List

1. *HPV Challenge Program orphan chemicals.* Two hundred seventy (270) HPV Challenge Program orphan chemicals were added to the *Priority Testing List* in the 55th ITC Report (Ref. 2) and 5 were added to the *Priority Testing List* in the 56th ITC Report (Ref. 3).

Thirty (30) HPV Challenge Program orphan chemicals were removed from the *Priority Testing List* in the 56th ITC Report. Eight (8) HPV Challenge Program orphan chemicals were removed from the *Priority Testing List* in the 58th ITC Report (Ref. 4). Thirty-five (35) HPV Challenge Program orphan chemicals were removed from the *Priority Testing List* in the 61st ITC Report (Ref. 5). One HPV Challenge Program Orphan chemical was removed from the *Priority Testing List* in the 63rd ITC Report (Ref. 6).

In this ITC report 29 HPV Challenge Program orphan chemicals are being removed from the *Priority Testing List* because they were included in the EPA's TSCA section 4 proposed test rule (Ref. 7). (See Table 3 of this unit.)

TABLE 3—TWENTY-NINE HPV CHALLENGE PROGRAM ORPHAN CHEMICALS BEING REMOVED FROM THE PRIORITY TESTING LIST

CAS No.	Chemical name
83-41–0	Benzene, 1,2-dimethyl-3-nitro-
96–22–0	3-Pentanone
98–09–9	Benzenesulfonyl chloride
98–56–6	Benzene, 1-chloro-4-(trifluoromethyl)-
111–44–4	Ethane, 1,1′-oxybis[2-chloro-]
127–68–4	Benzenesulfonic acid, 3-nitro-, sodium salt (1:1)
506–51–4	1-Tetracosanol
506–52–5	1-Hexacosanol
515–40–2	Benzene, (2-chloro-1,1-dimethylethyl)-
2494–89–5	Ethanol, 2-[(4-aminophenyl)sulfonyl]-, 1-(hydrogen sulfate)
5026–74–4	2-Oxiranemethanamine, *N*-[4-(2-oxiranylmethoxy)phenyl]-*N*-(2-oxiranylmethyl)-
22527–63–5	Propanoic acid, 2-methyl-, 3-(benzoyloxy)-2,2,4-trimethylpentyl ester
24615–84–7	2-Propenoic acid, 2-carboxyethyl ester
25321–41–9	Benzenesulfonic acid, dimethyl-
25646–71–3	Methanesulfonamide, *N*-[2-[(4-amino-3-methylphenyl)ethylamino] ethyl]-, sulfate (2:3)
52556–42–0	1-Propanesulfonic acid, 2-hydroxy-3-(2-propen-1-yloxy)-, sodium salt (1:1)

TABLE 3—TWENTY-NINE HPV CHALLENGE PROGRAM ORPHAN CHEMICALS BEING REMOVED FROM THE PRIORITY TESTING LIST—Continued

CAS No.	Chemical name
61788–76–9	Alkanes, chloro
65996–79–4	Solvent naphtha (coal)
65996–82–9	Tar oils, coal
65996–89–6	Tar, coal, high-temp.
65996–92–1	Distillates (coal tar)
68082–78–0	Lard, oil, Me esters
68187–57–5	Pitch, coal tar-petroleum
68442–60–4	Acetaldehyde, reaction products with formaldehyde, by-products from
68610–90–2	2-Butenedioic acid (2E)-, di-C8-18-alkyl esters
68988–22–7	1,4-Benzenedicarboxylic acid, 1,4-dimethyl ester, manuf. of, by-products from
70693–50–4	Phenol, 2,4-bis(1-methyl-1-phenylethyl)-6-[2-(2-nitrophenyl)diazenyl]-
72162–15–3	1-Decene, sulfurized
73665–18–6	Extract residues (coal), tar oil alk., naphthalene distn. residues

2. *Lead and lead compounds.* Lead and lead compounds were added to the *Priority Testing List* in the ITC's 60th Report to obtain unpublished health and safety studies that relate to the lead content of consumer products that are ''intended for use by children'' and studies that assess children's exposure to lead from such products (Ref. 8). At this time the ITC is removing lead and lead compounds from the *Priority Testing List* because the EPA has reviewed the unpublished health and safety studies submitted in response to the TSCA section 8(d) HaSDR rule (Ref. 9).

TABLE 4—LEAD AND LEAD COMPOUNDS BEING REMOVED FROM THE PRIORITY TESTING LIST

CAS No.	Chemical Name
301–04–2	Acetic acid, lead(2+) salt (2:1)
598–63–0	Carbonic acid, lead(2+) salt (1:1)
1309–60–0	Lead oxide (PbO_2)
1314–87–0	Lead sulfide (PbS)
7428–48–0	Octadecanoic acid, lead salt (1:?)
7439–92–1	Lead
7446–27–7	Phosphoric acid, lead(2+) salt (2:3)
7758–95–4	Lead chloride ($PbCl_2$)
7758–97–6	Chromic acid (H_2CrO_4), lead(2+) salt (1:1)
13814–96–5	Borate(1-), tetrafluoro-, lead(2+) (2:1)
53466–66–3	Silicic acid, lead salt, basic
63653–42–9	Sulfuric acid, lead salt (1:?), basic

V. References

1. ITC. Fifty-Second Report of the ITC; Notice. **Federal Register** (68 FR 43608, July 23, 2003) (FRL–7314–4). Available on-line at: *http://www.gpoaccess.gov/fr.*

2. ITC. Fifty-Fifth Report of the ITC; Notice. **Federal Register** (70 FR 7364, February 11, 2005) (FRL–7692–1). Available on-line at: *http://www.gpoaccess.gov/fr.*

3. ITC. Fifty-Sixth Report of the ITC; Notice. **Federal Register** (70 FR 61520, October 24, 2005) (FRL–7739–9). Available on-line at: *http://www.gpoaccess.gov/fr.*

4. ITC. Fifty-Eighth Report of the ITC; Notice. **Federal Register** (71 FR 39188, July 11, 2006) (FRL–8073–7). Available on-line at: *http://www.gpoaccess.gov/fr.*

5. ITC. Sixty-First Report of the ITC; Notice. **Federal Register** (73 FR 5080, January 28, 2008) (FRL–8347–1). Available on-line at: *http://www.gpoaccess.gov/fr.*

6. ITC. Sixty-Third Report of the ITC; Notice. **Federal Register** (73 FR 65486, November 3, 2008) (FRL–8387–6). Available on-line at: *http://www.gpoaccess.gov/fr.*

7. EPA. Testing of Certain High Production Volume Chemicals; Third Group of Chemicals; Proposed rule. **Federal Register** (75 FR 8575, February 25, 2010) (FRL–8805–8). Available on-line at: *http://www.gpoaccess.gov/fr.*

8. ITC. Sixtieth Report of the ITC; Notice. **Federal Register** (72 FR 41414, July 27, 2007) (FRL–8137–6). Available online at: *http://www.gpoaccess.gov/fr.*

9. EPA. Health and Safety Data Reporting; Addition of Certain Chemicals; Final rule. **Federal Register** (73 FR 5109, January 29, 2008) (FRL–8154–2). Available on-line at: *http://www.gpoaccess.gov/fr.*

VI. The TSCA Interagency Testing Committee

Statutory Organizations and Their Representatives

Council on Environmental Quality

Vacant.

Department of Commerce

National Institute of Standards and Technology

Dianne L. Poster, Alternate.

National Oceanographic and Atmospheric Administration

Kimani Kimbrough, Member.
Anthony S. Pait, Alternate.

Environmental Protection Agency

Robert W. Jones, Member.
John E. Schaeffer, Alternate.

National Cancer Institute

Vacant.

National Institute of Environmental Health Sciences

Nigel Walker, Member.

Scott Masten, Alternate.

National Institute for Occupational Safety and Health

Gayle DeBord, Member.

Dennis W. Lynch, Alternate.

National Science Foundation

Vacant.

Occupational Safety and Health Administration

Thomas Nerad, Member, Chair.

Liaison Organizations and Their Representatives

Agency for Toxic Substances and Disease Registry

Daphne Moffett, Member.
Glenn D. Todd, Alternate.

Consumer Product Safety Commission

Dominique Williams, Member.

Department of Agriculture

Clifford P. Rice, Member, Vice-Chair.
Laura L. McConnell, Alternate.

Department of Defense

Laurie E. Roszell, Member.

Department of the Interior

Barnett A. Rattner, Member.

Food and Drug Administration

Kirk Arvidson, Member.

Ronald F. Chanderbhan, Alternate.

ITC Staff

John D. Walker, Director.

Carol Savage, Administrative Assistant (NOWCC Employee).

TSCA Interagency Testing Committee (7401M), Office of Pollution Prevention and Toxics, Environmental Protection Agency, 1200 Pennsylvania Ave., NW., Washington, DC 20460–0001; e-mail address: *savage.carol@epa.gov*; url: *http://www.epa.gov/opptintr/itc*.

[FR Doc. 2011–19414 Filed 7–29–11; 8:45 am]

BILLING CODE 6560–50–P

FEDERAL REGISTER

Vol. 76 Monday,

No. 147 August 1, 2011

Part VI

The President

Proclamation 8696—World Hepatitis Day, 2011

Federal Register
Vol. 76, No. 147
Monday, August 1, 2011

Presidential Documents

Title 3—

The President

Proclamation 8696 of July 27, 2011

World Hepatitis Day, 2011

By the President of the United States of America

A Proclamation

Across our Nation, millions of Americans are living with viral hepatitis. As many as three-fourths of Americans living with the disease are unaware of their status and are not receiving care and treatment for their condition. Raising awareness about hepatitis is crucial to effectively fight stigmas, stem the tide of new infections, and ensure treatment reaches those who need it. On World Hepatitis Day, we join with people across our country and around the globe in promoting strategies that will help save lives and prevent the spread of viral hepatitis.

Viral hepatitis is inflammation of the liver, and can cause a lifetime of health issues for people who contract it. Hepatitis B and C viruses are the cause of a growing number of new liver cancer cases and liver transplants. In the United States, hepatitis is a leading infectious cause of death, claiming the lives of thousands of Americans each year. While we have come far, work still needs to be done to prevent and treat this disease.

Viral hepatitis touches Americans of all backgrounds, but certain groups are at greater risk than others. Past recipients of donated blood, infants born to mothers infected with viral hepatitis, and persons with sexually transmitted diseases or behaviors such as injection-drug use have risks for viral hepatitis. Baby boomers and African Americans have higher rates than others of contracting hepatitis C. Half of all Americans living with hepatitis B today are of Asian American and Pacific Islander descent, and one-third of people living with HIV also have either hepatitis B or hepatitis C. Worldwide, one in twelve people is living with viral hepatitis.

We must make sure that this ''silent epidemic'' does not go unnoticed by health professionals or by communities across our country. Under the Affordable Care Act, services including hepatitis immunizations for adults and hepatitis screenings for pregnant women are fully covered by all new insurance plans. My Administration has also released a comprehensive Action Plan for the Prevention, Care and Treatment of Viral Hepatitis. The plan brings together expertise and tools across government to coordinate our fight against this deadly disease. Our goal is to reduce the number of new infections, increase status awareness among people with hepatitis, and eliminate the transmission of hepatitis B from mothers to their children.

The first step toward achieving these goals is raising public awareness of this life-threatening disease. We must work to reduce the stigma surrounding hepatitis, and to ensure that testing, information, counseling, and treatment are available to all who need it. The hard work and dedication of health-care professionals, researchers, and advocates will help bring us closer to this goal. On this day, we renew our support for those living with hepatitis, and for their families, friends, and communities who are working to create a brighter, healthier future.

NOW, THEREFORE, I, BARACK OBAMA, President of the United States of America, by virtue of the authority vested in me by the Constitution and the laws of the United States, do hereby proclaim July 28, 2011, as World Hepatitis Day. I encourage citizens, Government agencies, nonprofit

organizations, and communities across the Nation to join in activities that will increase awareness about hepatitis and what we can do to prevent it.

IN WITNESS WHEREOF, I have hereunto set my hand this twenty-seventh day of July, in the year of our Lord two thousand eleven, and of the Independence of the United States of America the two hundred and thirty-sixth.

[FR Doc. 2011–19618
Filed 7–29–11; 11:15 am]
Billing code 3195–W1–P

Reader Aids

Federal Register

Vol. 76, No. 147

Monday, August 1, 2011

CUSTOMER SERVICE AND INFORMATION

Federal Register/Code of Federal Regulations	
General Information, indexes and other finding aids	**202–741–6000**
Laws	**741–6000**
Presidential Documents	
Executive orders and proclamations	**741–6000**
The United States Government Manual	**741–6000**
Other Services	
Electronic and on-line services (voice)	**741–6020**
Privacy Act Compilation	**741–6064**
Public Laws Update Service (numbers, dates, etc.)	**741–6043**
TTY for the deaf-and-hard-of-hearing	**741–6086**

ELECTRONIC RESEARCH

World Wide Web

Full text of the daily Federal Register, CFR and other publications is located at: **www.fdsys.gov.**

Federal Register information and research tools, including Public Inspection List, indexes, and links to GPO Access are located at: **www.ofr.gov.**

E-mail

FEDREGTOC-L (Federal Register Table of Contents LISTSERV) is an open e-mail service that provides subscribers with a digital form of the Federal Register Table of Contents. The digital form of the Federal Register Table of Contents includes HTML and PDF links to the full text of each document.

To join or leave, go to **http://listserv.access.gpo.gov** and select *Online mailing list archives, FEDREGTOC-L, Join or leave the list (or change settings);* then follow the instructions.

PENS (Public Law Electronic Notification Service) is an e-mail service that notifies subscribers of recently enacted laws.

To subscribe, go to **http://listserv.gsa.gov/archives/publaws-l.html** and select *Join or leave the list (or change settings);* then follow the instructions.

FEDREGTOC-L and **PENS** are mailing lists only. We cannot respond to specific inquiries.

Reference questions. Send questions and comments about the Federal Register system to: **fedreg.info@nara.gov**

The Federal Register staff cannot interpret specific documents or regulations.

Reminders. Effective January 1, 2009, the Reminders, including Rules Going Into Effect and Comments Due Next Week, no longer appear in the Reader Aids section of the Federal Register. This information can be found online at **http://www.regulations.gov.**

CFR Checklist. Effective January 1, 2009, the CFR Checklist no longer appears in the Federal Register. This information can be found online at **http://bookstore.gpo.gov/.**

FEDERAL REGISTER PAGES AND DATE, AUGUST

45653–46184 1

CFR PARTS AFFECTED DURING AUGUST

At the end of each month the Office of the Federal Register publishes separately a List of CFR Sections Affected (LSA), which lists parts and sections affected by documents published since the revision date of each title.

LIST OF PUBLIC LAWS

This is a continuing list of public bills from the current session of Congress which have become Federal laws. It may be used in conjunction with "P L U S" (Public Laws Update Service) on 202–741–6043. This list is also available online at *http://www.archives.gov/federal-register/laws*.

The text of laws is not published in the **Federal Register** but may be ordered in "slip law" (individual pamphlet) form from the Superintendent of Documents, U.S. Government Printing Office, Washington, DC 20402 (phone, 202–512–1808). The text will also be made available on the Internet from GPO's Federal Digital System (FDsys) at *http://www.gpo.gov/fdsys*. Some laws may not yet be available.

S. 1103/P.L. 112–24
To extend the term of the incumbent Director of the Federal Bureau of Investigation. (July 26, 2011; 125 Stat. 238)
Last List July 1, 2011

Public Laws Electronic Notification Service (PENS)

PENS is a free electronic mail notification service of newly enacted public laws. To subscribe, go to *http://listserv.gsa.gov/archives/publaws-l.html*

Note: This service is strictly for E-mail notification of new laws. The text of laws is not available through this service. **PENS** cannot respond to specific inquiries sent to this address.