AUTHENTICATED
U.S. GOVERNMENT
INFORMATION
GPO

FEDERAL REGISTER

Vol. 76 Monday,
No. 152 August 8, 2011

Book 1 of 2 Books
Pages 47985–48206

OFFICE OF THE FEDERAL REGISTER

The **FEDERAL REGISTER** (ISSN 0097–6326) is published daily, Monday through Friday, except official holidays, by the Office of the Federal Register, National Archives and Records Administration, Washington, DC 20408, under the Federal Register Act (44 U.S.C. Ch. 15) and the regulations of the Administrative Committee of the Federal Register (1 CFR Ch. I). The Superintendent of Documents, U.S. Government Printing Office, Washington, DC 20402 is the exclusive distributor of the official edition. Periodicals postage is paid at Washington, DC.

The **FEDERAL REGISTER** provides a uniform system for making available to the public regulations and legal notices issued by Federal agencies. These include Presidential proclamations and Executive Orders, Federal agency documents having general applicability and legal effect, documents required to be published by act of Congress, and other Federal agency documents of public interest.

Documents are on file for public inspection in the Office of the Federal Register the day before they are published, unless the issuing agency requests earlier filing. For a list of documents currently on file for public inspection, see *www.ofr.gov.*

The seal of the National Archives and Records Administration authenticates the Federal Register as the official serial publication established under the Federal Register Act. Under 44 U.S.C. 1507, the contents of the **Federal Register** shall be judicially noticed.

The **Federal Register** is published in paper and on 24x microfiche. It is also available online at no charge at *www.fdsys.gov*, a service of the U.S. Government Printing Office.

The online edition of the **Federal Register** is issued under the authority of the Administrative Committee of the Federal Register as the official legal equivalent of the paper and microfiche editions (44 U.S.C. 4101 and 1 CFR 5.10). It is updated by 6:00 a.m. each day the **Federal Register** is published and includes both text and graphics from Volume 59, 1 (January 2, 1994) forward. For more information, contact the GPO Customer Contact Center, U.S. Government Printing Office. Phone 202-512-1800 or 866-512-1800 (toll free). E-mail, *gpo@custhelp.com.*

The annual subscription price for the **Federal Register** paper edition is $749 plus postage, or $808, plus postage, for a combined **Federal Register, Federal Register** Index and List of CFR Sections Affected (LSA) subscription; the microfiche edition of the **Federal Register** including the **Federal Register** Index and LSA is $165, plus postage. Six month subscriptions are available for one-half the annual rate. The prevailing postal rates will be applied to orders according to the delivery method requested. The price of a single copy of the daily **Federal Register,** including postage, is based on the number of pages: $11 for an issue containing less than 200 pages; $22 for an issue containing 200 to 400 pages; and $33 for an issue containing more than 400 pages. Single issues of the microfiche edition may be purchased for $3 per copy, including postage. Remit check or money order, made payable to the Superintendent of Documents, or charge to your GPO Deposit Account, VISA, MasterCard, American Express, or Discover. Mail to: U.S. Government Printing Office—New Orders, P.O. Box 979050, St. Louis, MO 63197-9000; or call toll free 1-866-512-1800, DC area 202-512-1800; or go to the U.S. Government Online Bookstore site, see *bookstore.gpo.gov.*

There are no restrictions on the republication of material appearing in the **Federal Register.**

How To Cite This Publication: Use the volume number and the page number. Example: 76 FR 12345.

Postmaster: Send address changes to the Superintendent of Documents, Federal Register, U.S. Government Printing Office, Washington, DC 20402, along with the entire mailing label from the last issue received.

SUBSCRIPTIONS AND COPIES

PUBLIC

Subscriptions:

Paper or fiche	**202–512–1800**
Assistance with public subscriptions	**202–512–1806**

General online information **202–512–1530; 1–888–293–6498**

Single copies/back copies:

Paper or fiche	**202–512–1800**
Assistance with public single copies	**1–866–512–1800 (Toll-Free)**

FEDERAL AGENCIES

Subscriptions:

Paper or fiche	**202–741–6005**
Assistance with Federal agency subscriptions	**202–741–6005**

Printed on recycled paper.

Contents

Federal Register

Vol. 76, No. 152

Monday, August 8, 2011

Administrative Conference of the United States
NOTICES
Meetings:
Committee on Rulemaking, 48117

Agriculture Department
See Animal and Plant Health Inspection Service
See Forest Service
NOTICES
Agency Information Collection Activities; Proposals, Submissions, and Approvals, 48117–48118

Animal and Plant Health Inspection Service
NOTICES
Agency Information Collection Activities; Proposals, Submissions, and Approvals:
Brucellosis First Point Testing of Cattle and Bison; Brucellosis Standard Card Test, 48118
Environmental Assessments; Availability. etc.:
Oral Rabies Vaccine Trial Risk Assessment, 48119–48120

Centers for Disease Control and Prevention
NOTICES
Agency Information Collection Activities; Proposals, Submissions, and Approvals, 48164–48165

Centers for Medicare & Medicaid Services
RULES
Medicare Program:
Prospective Payment System and Consolidated Billing for Skilled Nursing Facilities for FY 2012, 48486–48562
NOTICES
Medicare and Medicaid Programs:
Quarterly Listing of Program Issuances—January through March 2011, 48564–48692

Children and Families Administration
NOTICES
Agency Information Collection Activities; Proposals, Submissions, and Approvals:
Low Income Home Energy Assistance Program Carryover and Reallotment Report, 48165–48166
Refugee Assistance Program Estimates CMA, 48165

Coast Guard
RULES
Safety Zones:
Allegheny River; Pittsburgh, PA, 47993–47996
Security Zones:
2011 Seattle Seafair Fleet Week Moving Vessels, Puget Sound, WA; correction, 47996
PROPOSED RULES
International Convention on Standards of Training, Certification and Watchkeeping for Seafarers, 1978, and Changes to Domestic Endorsements, 48101
Regulated Navigation Areas:
Zidell Waterfront Property, Willamette River, OR, 48070–48072

Commerce Department
See Foreign-Trade Zones Board
See International Trade Administration
See National Oceanic and Atmospheric Administration
See Patent and Trademark Office

Consumer Product Safety Commission
PROPOSED RULES
Consumer Registration of Durable Infant or Toddler Products, 48053–48058

Defense Department
See Navy Department

Employment Standards Administration
See Wage and Hour Division

Energy Department
See Energy Efficiency and Renewable Energy Office
See Southwestern Power Administration
NOTICES
Basic Energy Sciences Advisory Committee, 48147–48148
Meetings:
Environmental Management Site-Specific Advisory Board, Hanford, 48148–48149
Environmental Management Site-Specific Advisory Board, Paducah, 48148

Energy Efficiency and Renewable Energy Office
NOTICES
Waiver From Department of Energy Residential Clothes Washer Test Procedures:
Samsung Electronics America, Inc., 48149–48152
Commercial Building Asset Rating Program, 48152–48158

Environmental Protection Agency
RULES
Approvals and Promulgations of Air Quality Implementation Plans:
California; Interstate Transport of Pollution; Interference With Prevention of Significant Deterioration Requirement, 48002–48006
Federal Implementation Plans:
Interstate Transport of Fine Particulate Matter and Ozone and Correction of SIP Approvals, 48208–48483
Limited Federal Implementation Plan; Prevention of Significant Deterioration:
California; North Coast Unified Air Quality Management District, 48006–48009
Significant New Use Rules:
Cobalt Lithium Manganese Nickel Oxide, 47996–48002
PROPOSED RULES
Hazardous Chemical Reporting:
Revisions to the Emergency and Hazardous Chemical Inventory Forms (Tier I and Tier II), 48093–48101
Hazardous Waste Management System:
Identification and Listing of Hazardous Waste; Carbon Dioxide (CO_2) Streams in Geologic Sequestration Activities, 48073–48093
Secondary National Ambient Air Quality Standards for Oxides of Nitrogen and Sulfur:
Public Hearing, 48073
NOTICES
Agency Information Collection Activities; Proposals, Submissions, and Approvals, 48161

Executive Office of the President
See Trade Representative, Office of United States

Farm Credit Administration
NOTICES
Meetings; Sunshine Act, 48161

Federal Aviation Administration
RULES
Standard Instrument Approach Procedures, and Takeoff Minimums and Obstacle Departure Procedures, 47985–47990
PROPOSED RULES
Airworthiness Directives:
Costruzioni Aeronautiche Tecnam srl Model P2006T Airplanes, 48045–48047
Diamond Aircraft Industries Powered Sailplanes, 48047–48049
Lockheed Martin Corporation/Lockheed Martin Aeronautics Company Model L 1011 Series Airplanes, 48049–48053

Federal Communications Commission
NOTICES
Agency Information Collection Activities; Proposals, Submissions, and Approvals, 48161–48162

Federal Deposit Insurance Corporation
NOTICES
Advisory Committee on Community Banking; Charter Renewal, 48162
Meetings; Sunshine Act, 48162–48163

Federal Election Commission
NOTICES
Meetings; Sunshine Act, 48163

Federal Reserve System
NOTICES
Changes in Bank Control:
Formations of, Acquisitions by, and Mergers of Bank Holding Companies; Correction, 48163
Formations of, Acquisitions by, and Mergers of Bank Holding Companies, 48163–48164

Fish and Wildlife Service
PROPOSED RULES
Migratory Bird Hunting Regulations:
Certain Federal Indian Reservations and Ceded Lands for the 2011–12 Season, 48694–48712
NOTICES
Meetings:
Wind Turbine Guidelines Advisory Committee, 48174

Food and Drug Administration
PROPOSED RULES
Requirement for Premarket Approval for Cardiovascular Permanent Pacemaker Electrode, 48058–48062
Requirement for Premarket Approval for Cranial Electrotherapy Stimulator, 48062–48070
NOTICES
Agency Information Collection Activities; Proposals, Submissions, and Approvals:
Blood Establishment Registration and Product Listing, 48167–48168
Cooperative Manufacturing Arrangements for Licensed Biologics, 48166–48167
Debarment Orders:
Andrew K. Choi, 48168–48169
Meetings:
Advancing Regulatory Science for Highly Multiplexed Microbiology/Medical Countermeasure Devices, 48169–48171

Foreign-Trade Zones Board
NOTICES
Applications for Reorganization and Expansion under Alternative Site Framework:
Foreign-Trade Zone 77, Memphis, TN, 48121

Forest Service
NOTICES
Environmental Impact Statements; Availability, etc.:
Mountain Pine Beetle Response Project, Black Hills National Forest, Custer, SD, 48120–48121

Health and Human Services Department
See Centers for Disease Control and Prevention
See Centers for Medicare & Medicaid Services
See Children and Families Administration
See Food and Drug Administration
See Health Resources and Services Administration
See National Institutes of Health
See Substance Abuse and Mental Health Services Administration

Health Resources and Services Administration
NOTICES
Agency Information Collection Activities; Proposals, Submissions, and Approvals, 48171–48172

Homeland Security Department
See Coast Guard

Interior Department
See Fish and Wildlife Service
See Land Management Bureau
See National Park Service

International Trade Administration
NOTICES
Amended Final Results of Administrative Reviews Pursuant to Court Decision:
Certain Pasta From Italy, 48122
Antidumping Duty Administrative Reviews; Preliminary Results:
Certain Pasta From Italy, 48125–48130
Polyethylene Terephthalate Film, Sheet, and Strip From Brazil, 48122–48125
Applications for Duty-Free Entry of Scientific Instruments:
Southern Illinois University, et al., 48130
Countervailing Duty Administrative Reviews; Preliminary Results:
Certain Pasta From Italy, 48130–48142
Final Results of Antidumping Duty Administrative Review and Final Rescission in Part:
1-Hydroxyethylidene-1, 1-Diphosphonic Acid From the Peoples Republic of China, 48142–48143
Preliminary Intent to Rescind Reviews:
Certain Hot-Rolled Carbon Steel Flat Products From the People's Republic of China, 48143–48145
Terminations of Panel Reviews:
Binational Panel, North American Free-Trade Agreement, Article 1904, 48145

Labor Department
See Wage and Hour Division

Land Management Bureau
NOTICES
Stay of Filing of Plat; Colorado, 48174
Wild Horse and Burro Advisory Board; Nominations, 48174–48175

National Highway Traffic Safety Administration
RULES
Federal Motor Vehicle Safety Standards:
Lamps, Reflective Devices, and Associated Equipment, 48009–48044
PROPOSED RULES
Petition for Approval of Alternate Odometer Disclosure Requirements, 48101–48116

National Institutes of Health
NOTICES
Prospective Grant of Exclusive Licenses:
Use of PKM2 Activators for the Treatment of Cancer, 48172–48173

National Oceanic and Atmospheric Administration
NOTICES
Permit Modifications:
Endangered Species; File No. 1551, 48146
Permits:
Marine Mammals; File No. 15330, 48146–48147

National Park Service
NOTICES
Intent to Repatriate Cultural Items:
California Department of Parks and Recreation, Sacramento, CA, 48175–48176
Inventory Completion:
Fowler Museum at UCLA, Los Angeles, CA, 48176–48177
Longyear Museum of Anthropology, Colgate University, Hamilton, NY, 48178–48179
Slater Museum of Natural History, University of Puget Sound, Tacoma, WA, 48179–48180
Washington State Department of Natural Resources, Olympia, WA and University of Washington, Department of Anthropology, Seattle, WA, 48177–48178
National Register of Historic Places:
Pending Nominations and Related Actions, 48180–48181

National Science Foundation
NOTICES
Permit Applications Received Under the Antarctic Conservation Act of 1978, 48182–48184

Navy Department
NOTICES
Exclusive Patent License Agreements:
OxiCool, Inc., 48147

Nuclear Regulatory Commission
NOTICES
Exemptions From Certain Security Requirements:
Exelon Nuclear; Peach Bottom Atomic Power Station, Unit 1, 48184–48186

Office of United States Trade Representative
See Trade Representative, Office of United States

Patent and Trademark Office
NOTICES
Agency Information Collection Activities; Proposals, Submissions, and Approvals, 48147

Securities and Exchange Commission
NOTICES
Self-Regulatory Organizations; Proposed Rule Changes:
Chicago Board Options Exchange, Inc., 48190–48192
International Securities Exchange, Inc., 48187–48189
Municipal Securities Rulemaking Board, 48197–48200
NASDAQ OMX PHLX LLC, 48195–48197
NASDAQ Stock Market LLC, 48186–48187, 48189–48190, 48193–48195
National Securities Clearing Corp., 48192–48193

Social Security Administration
NOTICES
Agency Information Collection Activities; Proposals, Submissions, and Approvals, 48200–48202

Southwestern Power Administration
NOTICES
Integrated System Power Rates, 48159–48161

State Department
RULES
International Traffic in Arms Regulations:
Updates to Country Policies, and Other Changes, 47990–47993

Substance Abuse and Mental Health Services Administration

NOTICES
Fiscal Year 2011 Funding Opportunities, 48173

Trade Representative, Office of United States
NOTICES
Agency Information Collection Activities; Proposals, Submissions, and Approvals:
Caribbean Basin Economic Recovery Act and the Caribbean Basin Trade Partnership Act, 48202–48204

Transportation Department
See Federal Aviation Administration
See National Highway Traffic Safety Administration

Veterans Affairs Department
NOTICES
Fund Availabilities Under VA's Homeless Providers Grant and Per Diem Program, 48204–48206

Wage and Hour Division
NOTICES
Agency Information Collection Activities; Proposals, Submissions, and Approvals, 48181–48182

Separate Parts In This Issue

Part II
Environmental Protection Agency, 48208–48483

Part III
Health and Human Services Department, Centers for Medicare & Medicaid Services, 48486–48562

Part IV
Health and Human Services Department, Centers for Medicare & Medicaid Services, 48564–48692

Part V
Interior Department, Fish and Wildlife Service, 48694–48712

Reader Aids

Consult the Reader Aids section at the end of this page for phone numbers, online resources, finding aids, reminders, and notice of recently enacted public laws.

To subscribe to the Federal Register Table of Contents LISTSERV electronic mailing list, go to http://listserv.access.gpo.gov and select Online mailing list archives, FEDREGTOC-L, Join or leave the list (or change settings); then follow the instructions.

CFR PARTS AFFECTED IN THIS ISSUE

A cumulative list of the parts affected this month can be found in the Reader Aids section at the end of this issue.

14 CFR
97 (2 documents) 47985, 47988

Proposed Rules:
39 (3 documents) 48045, 48047, 48049

16 CFR

Proposed Rules:
1130.....48053

21 CFR

Proposed Rules:
870.....48058
882.....48062

22 CFR
126.....47990

33 CFR
165 (2 documents) 47993, 47996

Proposed Rules:
165.....48070

40 CFR
9.....47996
51.....48208
52 (3 documents) 48002, 48006, 48208
72.....48208
78.....48208
97.....48208
721.....47996

Proposed Rules:
50.....48073
260.....48073
261.....48073
370.....48093

42 CFR
413.....48486

46 CFR

Proposed Rules:
1.....48101
10.....48101
11.....48101
12.....48101
13.....48101
14.....48101

49 CFR
571.....48009

Proposed Rules:
580.....48101

50 CFR

Proposed Rules:
20.....48694

Rules and Regulations

Federal Register
Vol. 76, No. 152
Monday, August 8, 2011

This section of the FEDERAL REGISTER contains regulatory documents having general applicability and legal effect, most of which are keyed to and codified in the Code of Federal Regulations, which is published under 50 titles pursuant to 44 U.S.C. 1510.

The Code of Federal Regulations is sold by the Superintendent of Documents. Prices of new books are listed in the first FEDERAL REGISTER issue of each week.

DEPARTMENT OF TRANSPORTATION

Federal Aviation Administration

14 CFR Part 97

[Docket No. 30795; Amdt. No. 3436]

Standard Instrument Approach Procedures, and Takeoff Minimums and Obstacle Departure Procedures; Miscellaneous Amendments

AGENCY: Federal Aviation Administration (FAA), DOT.

ACTION: Final rule.

SUMMARY: This establishes, amends, suspends, or revokes Standard Instrument Approach Procedures (SIAPs) and associated Takeoff Minimums and Obstacle Departure Procedures for operations at certain airports. These regulatory actions are needed because of the adoption of new or revised criteria, or because of changes occurring in the National Airspace System, such as the commissioning of new navigational facilities, adding new obstacles, or changing air traffic requirements. These changes are designed to provide safe and efficient use of the navigable airspace and to promote safe flight operations under instrument flight rules at the affected airports.

DATES: This rule is effective August 8, 2011. The compliance date for each SIAP, associated Takeoff Minimums, and ODP is specified in the amendatory provisions.

The incorporation by reference of certain publications listed in the regulations is approved by the Director of the Federal Register as of August 8, 2011.

ADDRESSES: Availability of matters incorporated by reference in the amendment is as follows:

For Examination

1. FAA Rules Docket, FAA Headquarters Building, 800 Independence Avenue, SW., Washington, DC 20591;
2. The FAA Regional Office of the region in which the affected airport is located;
3. The National Flight Procedures Office, 6500 South MacArthur Blvd., Oklahoma City, OK 73169 or
4. The National Archives and Records Administration (NARA). For information on the availability of this material at NARA, call 202–741–6030, or go to: *http://www.archives.gov/federal_register/code_of_federal_regulations/ibr_locations.html.*

Availability—All SIAPs and Takeoff Minimums and ODPs are available online free of charge. Visit *http://www.nfdc.faa.gov* to register. Additionally, individual SIAP and Takeoff Minimums and ODP copies may be obtained from:

1. FAA Public Inquiry Center (APA–200), FAA Headquarters Building, 800 Independence Avenue, SW., Washington, DC 20591; or
2. The FAA Regional Office of the region in which the affected airport is located.

FOR FURTHER INFORMATION CONTACT: Harry J. Hodges, Flight Procedure Standards Branch (AFS–420), Flight Technologies and Programs Divisions, Flight Standards Service, Federal Aviation Administration, Mike Monroney Aeronautical Center, 6500 South MacArthur Blvd., Oklahoma City, OK 73169 (*Mail Address:* P.O. Box 25082, Oklahoma City, OK 73125) *Telephone:* (405) 954–4164.

SUPPLEMENTARY INFORMATION: This rule amends Title 14 of the Code of Federal Regulations, part 97 (14 CFR part 97), by establishing, amending, suspending, or revoking SIAPS, Takeoff Minimums and/or ODPS. The complete regulators description of each SIAP and its associated Takeoff Minimums or ODP for an identified airport is listed on FAA form documents which are incorporated by reference in this amendment under 5 U.S.C. 552(a), 1 CFR part 51, and 14 CFR part 97.20. The applicable FAA Forms are FAA Forms 8260–3, 8260–4, 8260–5, 8260–15A, and 8260–15B when required by an entry on 8260–15A.

The large number of SIAPs, Takeoff Minimums and ODPs, in addition to their complex nature and the need for a special format make publication in the **Federal Register** expensive and impractical. Furthermore, airmen do not use the regulatory text of the SIAPs, Takeoff Minimums or ODPs, but instead refer to their depiction on charts printed by publishers of aeronautical materials. The advantages of incorporation by reference are realized and publication of the complete description of each SIAP, Takeoff Minimums and ODP listed on FAA forms is unnecessary. This amendment provides the affected CFR sections and specifies the types of SIAPs and the effective dates of the associated Takeoff Minimums and ODPs. This amendment also identifies the airport and its location, the procedure, and the amendment number.

The Rule

This amendment to 14 CFR part 97 is effective upon publication of each separate SIAP, Takeoff Minimums and ODP as contained in the transmittal. Some SIAP and Takeoff Minimums and textual ODP amendments may have been issued previously by the FAA in a Flight Data Center (FDC) Notice to Airmen (NOTAM) as an emergency action of immediate flight safety relating directly to published aeronautical charts. The circumstances which created the need for some SIAP and Takeoff Minimums and ODP amendments may require making them effective in less than 30 days. For the remaining SIAPS and Takeoff Minimums and ODPS, an effective date at least 30 days after publication is provided.

Further, the SIAPs and Takeoff Minimums and ODPS contained in this amendment are based on the criteria contained in the U.S. Standard for Terminal Instrument Procedures (TERPS). In developing these SIAPS and Takeoff Minimums and ODPs, the TERPS criteria were applied to the conditions existing or anticipated at the affected airports. Because of the close and immediate relationship between these SIAPs, Takeoff Minimums and ODPs, and safety in air commerce, I find that notice and public procedures before adopting these SIAPS, Takeoff Minimums and ODPs are impracticable and contrary to the public interest and, where applicable, that good cause exists for making some SIAPs effective in less than 30 days.

Conclusion

The FAA has determined that this regulation only involves an established body of technical regulations for which frequent and routine amendments are necessary to keep them operationally current. It, therefore—(1) Is not a ''significant regulatory action'' under Executive Order 12866; (2) is not a ''significant rule '' under DOT Regulatory Policies and Procedures (44 FR 11034; February 26,1979); and (3) does not warrant preparation of a regulatory evaluation as the anticipated impact is so minimal. For the same reason, the FAA certifies that this amendment will not have a significant economic impact on a substantial number of small entities under the criteria of the Regulatory Flexibility Act.

List of Subjects in 14 CFR Part 97

Air Traffic Control, Airports, Incorporation by reference, and Navigation (air).

Issued in Washington, DC, on July 22, 2011.

John M. Allen,

Director, Flight Standards Service.

Adoption of the Amendment

Accordingly, pursuant to the authority delegated to me, Title 14, Code of Federal Regulations, Part 97 (14 CFR part 97) is amended by establishing, amending, suspending, or revoking Standard Instrument Approach Procedures and/or Takeoff Minimums and/or Obstacle Departure Procedures effective at 0902 UTC on the dates specified, as follows:

PART 97—STANDARD INSTRUMENT APPROACH PROCEDURES

■ 1. The authority citation for part 97 continues to read as follows:

Authority: 49 U.S.C. 106(g), 40103, 40106, 40113, 40114, 40120, 44502, 44514, 44701, 44719, 44721–44722.

■ 2. Part 97 is amended to read as follows:

Effective 25 Aug 2011

Eufaula, AL, Weedon Field, RNAV (GPS) RWY 18, Amdt 1
Eufaula, AL, Weedon Field, RNAV (GPS) RWY 36, Amdt 1
Eufaula, AL, Weedon Field, Takeoff Minimums & Obstacle DP, Amdt 1
Gadsden, AL, Northeast Alabama Rgnl, ILS OR LOC/DME RWY 24, Orig
Gadsden, AL, Northeast Alabama Rgnl, RNAV (GPS) RWY 6, Amdt 1
Gadsden, AL, Northeast Alabama Rgnl, RNAV (GPS) RWY 18, Amdt 1
Gadsden, AL, Northeast Alabama Rgnl, RNAV (GPS) RWY 24, Amdt 1
Gadsden, AL, Northeast Alabama Rgnl, RNAV (GPS) RWY 36, Amdt 1
Show Low, AZ, Show Low Rgnl, RNAV (GPS) RWY 24, Amdt 2
St Johns, AZ, St Johns Industrial Air Park, RNAV (GPS) RWY 14, Amdt 1
Alturas, CA, Alturas Muni, RNAV (GPS) RWY 31, Amdt 1
Burbank, CA, Bob Hope, RNAV (GPS) X RWY 8, Orig-D
Burbank, CA, Bob Hope, RNAV (RNP) Y RWY 8, Orig
Burbank, CA, Bob Hope, RNAV (RNP) Z RWY 8, Amdt 1
Carlsbad, CA, McClellan-Palomar, ILS OR LOC/DME RWY 24, Amdt 9
Carlsbad, CA, McClellan-Palomar, RNAV (RNP) Z RWY 24, Orig
Carlsbad, CA, McClellan-Palomar, VOR–A, Amdt 8
Long Beach, CA, Long Beach/Daugherty Field, RNAV (GPS) Z RWY 30, Amdt 2
Long Beach, CA, Long Beach/Daugherty Field, RNAV (RNP) RWY 12, Amdt 1
Long Beach, CA, Long Beach/Daugherty Field, RNAV (RNP) Y RWY 30, Amdt 1
Los Angeles, CA, Los Angeles Intl, RNAV (RNP) Z RWY 24L, Amdt 1A
Merced, CA, Merced Rgnl/Macready Field, GPS RWY 12, Orig-D, CANCELLED
Merced, CA, Merced Rgnl/Macready Field, RNAV (GPS) RWY 12, Orig
Oakdale, CA, Oakdale, RNAV (GPS) RWY 10, Amdt 1
Oakdale, CA, Oakdale, RNAV (GPS) RWY 28, Amdt 1
Oakdale, CA, Oakdale, VOR–A, Orig-B
Palmdale, CA, Palmdale Rgnl/USAF Plant 42, ILS OR LOC RWY 25, Amdt 9
Palmdale, CA, Palmdale Rgnl/USAF Plant 42, RNAV (GPS) RWY 25, Amdt 1
Petaluma, CA, Petaluma Muni, GPS RWY 29, Orig, CANCELLED
Petaluma, CA, Petaluma Muni, RNAV (GPS) RWY 29, Orig
Rio Vista, CA, Rio Vista Muni, RNAV (GPS) RWY 25, Amdt 2
Santa Ana, CA, John Wayne Airport—Orange County, RNAV (GPS) Y RWY 19R, Amdt 1B
Santa Ana, CA, John Wayne Airport—Orange County, RNAV (RNP) Z RWY 19R, Orig
Willows, CA, Willows-Glenn County, GPS RWY 34, Orig, CANCELLED
Willows, CA, Willows-Glenn County, RNAV (GPS) RWY 34, Orig
Willimantic, CT, Windham, LOC RWY 27, Amdt 3, CANCELLED
Deland, FL, Deland Muni-Sidney H Taylor Field, VOR RWY 23, Amdt 3, CANCELLED
Deland, FL, Deland Muni-Sidney H Taylor Field, VOR/DME RWY 23, Orig
Fort Myers, FL, Page Field, GPS RWY 5, Orig, CANCELLED
Fort Myers, FL, Page Field, GPS RWY 23, Orig-A, CANCELLED
Fort Myers, FL, Page Field, GPS RWY 31, Orig-B, CANCELLED
Fort Myers, FL, Page Field, ILS OR LOC RWY 5, Amdt 7
Fort Myers, FL, Page Field, RNAV (GPS) RWY 5, Orig
Fort Myers, FL, Page Field, RNAV (GPS) RWY 13, Amdt 1
Fort Myers, FL, Page Field, RNAV (GPS) RWY 23, Orig
Fort Myers, FL, Page Field, RNAV (GPS) RWY 31, Orig
West Palm Beach, FL, North Palm Beach County General Aviation, GPS RWY 8R, Orig, CANCELLED
West Palm Beach, FL, North Palm Beach County General Aviation, ILS OR LOC RWY 8R, Amdt 1
West Palm Beach, FL, North Palm Beach County General Aviation, RNAV (GPS) RWY 8R, Orig
Canton, GA, Cherokee County, NDB RWY 5, Amdt 4
Canton, GA, Cherokee County, RNAV (GPS) RWY 5, Amdt 1
Canton, GA, Cherokee County, RNAV (GPS) RWY 23, Amdt 1
Canton, GA, Cherokee County, Takeoff Minimums and Obstacle DP, Amdt 2
Fitzgerald, GA, Fitzgerald Muni, NDB RWY 1, Orig-B
Fitzgerald, GA, Fitzgerald Muni, RNAV (GPS) RWY 1, Orig
Kailua/Kona, HI, Kona Intl at Keahole, ILS OR LOC/DME RWY 17, Amdt 2
Kailua/Kona, HI, Kona Intl at Keahole, LOC/DME BC RWY 35, Amdt 10
Kailua/Kona, HI, Kona Intl at Keahole, RNAV (GPS) Y RWY 17, Amdt 1
Kailua/Kona, HI, Kona Intl at Keahole, RNAV (GPS) Y RWY 35, Amdt 1
Kailua/Kona, HI, Kona Intl at Keahole, RNAV (GPS) Z RWY 35, Amdt 1
Kailua/Kona, HI, Kona Intl at Keahole, RNAV (RNP) Z RWY 17, Orig
Kailua/Kona, HI, Kona Intl at Keahole, VOR/DME OR TACAN RWY 17, Amdt 4, CANCELLED
Kailua/Kona, HI, Kona Intl at Keahole, VOR/DME OR TACAN RWY 17, Orig
Kailua/Kona, HI, Kona Intl at Keahole, VOR/DME OR TACAN RWY 35, Orig
Kailua/Kona, HI, Kona Intl at Keahole, VOR OR TACAN RWY 35, Amdt 7, CANCELLED
Kamuela, HI, Waimea-Kohala, RNAV (GPS) RWY 4, Amdt 1
Kamuela, HI, Waimea-Kohala, VOR/DME RWY 4, Amdt 1
Des Moines, IA, Des Moines, IA, ILS OR LOC RWY 31, ILS RWY 31 (CAT II), ILS RWY 31 (CAT III), Amdt 23
Bloomington, IN, Monroe County, Takeoff Minimums and Obstacle DP, Amdt 6
Lewisport, KY, Hancock Co—Ron Lewis Field, RNAV (GPS) RWY 5, Amdt 1
Lewisport, KY, Hancock Co—Ron Lewis Field, RNAV (GPS) RWY 23, Amdt 1
Great Barrington, MA, Walter J. Koladza, GPS RWY 11, Orig, CANCELLED
Great Barrington, MA, Walter J. Koladza, RNAV (GPS) RWY 11, Orig
Plymouth, MA, Plymouth Muni, ILS OR LOC/DME RWY 6, Amdt 1
Plymouth, MA, Plymouth Muni, RNAV (GPS) RWY 6, Amdt 1
Plymouth, MA, Plymouth Muni, RNAV (GPS) RWY 24, Orig
Cumberland, MD, Greater Cumberland Rgnl, LOC–A, Amdt 4
Cumberland, MD, Greater Cumberland Rgnl, LOC/DME RWY 23, Amdt 6
Cumberland, MD, Greater Cumberland Rgnl, RNAV (GPS) RWY 5, Amdt 1
Cumberland, MD, Greater Cumberland Rgnl, RNAV (GPS) RWY 23, Orig
Cumberland, MD, Greater Cumberland Rgnl, Takeoff Minimums and Obstacle DP, Amdt 6

Houlton, ME, Houlton Intl, GPS RWY 5, Orig, CANCELLED
Houlton, ME, Houlton Intl, GPS–A, Orig-A, CANCELLED
Houlton, ME, Houlton Intl, RNAV (GPS) RWY 5, Orig
Houlton, ME, Houlton Intl, RNAV–A, Orig
Houlton, ME, Houlton Intl, Takeoff Minimums and Obstacle DP, Amdt 2
Houlton, ME, Houlton Intl, VOR/DME RWY 5, Amdt 11
Cheboygan, MI, Cheboygan County, RNAV (GPS) RWY 10, Amdt 3
Detroit, MI, Willow Run, RNAV (GPS) RWY 23R, Amdt 1
Howell, MI, Livingston County Spencer J. Hardy, ILS OR LOC RWY 13, Amdt 1
Howell, MI, Livingston County Spencer J. Hardy, RNAV (GPS) RWY 13, Amdt 2
Howell, MI, Livingston County Spencer J. Hardy, RNAV (GPS) RWY 31, Amdt 1
Port Huron, MI, St Clair County Intl, NDB RWY 4, Amdt 4
Port Huron, MI, St Clair County Intl, RNAV (GPS) RWY 4, Orig
Port Huron, MI, St Clair County Intl, RNAV (GPS) RWY 22, Orig
Port Huron, MI, St Clair County Intl, VOR/DME–A, Amdt 8
Port Huron, MI, St Clair County Intl, VOR/DME RNAV OR GPS RWY 22, Amdt 2A, CANCELLED
South Haven, MI, South Haven Area Rgnl, RNAV (GPS) RWY 4, Amdt 1A
South Haven, MI, South Haven Area Rgnl, RNAV (GPS) RWY 22, Amdt 1A
Two Harbors, MN, Richard B Helgeson, RNAV (GPS) RWY 24, Orig-A
Cuba, MO, Cuba Muni, RNAV (GPS) RWY 36, Orig-A
Maryville, MO, Northwest Missouri Rgnl, RNAV (GPS) RWY 14, Amdt 1
Maryville, MO, Northwest Missouri Rgnl, RNAV (GPS) RWY 32, Amdt 1
Mexico, MO, Mexico Memorial, RNAV (GPS) RWY 6, Amdt 1
Neosho, MO, Neosho Hugh Robinson, RNAV (GPS) RWY 1, Amdt 1
Neosho, MO, Neosho Hugh Robinson, RNAV (GPS) RWY 19, Amdt 1
Potosi, MO, Washington County, RNAV (GPS) RWY 2, Amdt 2
Sikeston, MO, Sikeston Memorial Muni, RNAV (GPS) RWY 20, Amdt 1
St Louis, MO, Lambert-St Louis Intl, RNAV (GPS) RWY 6, Amdt 1
Bay St Louis, MS, Stennis Intl, ILS OR LOC RWY 18, Amdt 1
Bay St Louis, MS, Stennis Intl, RNAV (GPS) RWY 18, Amdt 1
Bay St Louis, MS, Stennis Intl, RNAV (GPS) RWY 36, Amdt 2
Pascagoula, MS, Trent Lott Intl, ILS OR LOC RWY 17, Amdt 2
Pascagoula, MS, Trent Lott Intl, RNAV (GPS) RWY 17, Amdt 1
Pascagoula, MS, Trent Lott Intl, Takeoff Minimums and Obstacle DP, Amdt 1
Goldsboro, NC, Wayne Executive Jetport, ILS OR LOC RWY 23, Amdt 2
Goldsboro, NC, Wayne Executive Jetport, RNAV (GPS) RWY 5, Amdt 1
Goldsboro, NC, Wayne Executive Jetport, RNAV (GPS) RWY 23, Amdt 1
Goldsboro, NC, Wayne Executive Jetport, VOR–A, Amdt 6
Hickory, NC, Hickory Rgnl, ILS OR LOC RWY 24, Amdt 8
Hickory, NC, Hickory Rgnl, RNAV (GPS) RWY 1, Amdt 1
Hickory, NC, Hickory Rgnl, RNAV (GPS) RWY 6, Amdt 1
Hickory, NC, Hickory Rgnl, RNAV (GPS) RWY 19, Amdt 1
Hickory, NC, Hickory Rgnl, RNAV (GPS) RWY 24, Amdt 1
Hickory, NC, Hickory Rgnl, Takeoff Minimums and Obstacle DP, Amdt 4
Lumberton, NC, Lumberton Muni, GPS RWY 5, Orig-A, CANCELLED
Lumberton, NC, Lumberton Muni, GPS RWY 13, Orig, CANCELLED
Lumberton, NC, Lumberton Muni, ILS OR LOC RWY 5, Amdt 1
Lumberton, NC, Lumberton Muni, RNAV (GPS) RWY 5, Orig
Lumberton, NC, Lumberton Muni, RNAV (GPS) RWY 13, Orig
Lumberton, NC, Lumberton Muni, RNAV (GPS) RWY 23, Orig
Lumberton, NC, Lumberton Muni, VOR RWY 5, Amdt 8B, CANCELLED
Lumberton, NC, Lumberton Muni, VOR RWY 13, Amdt 9B, CANCELLED
Shelby, NC, Shelby-Cleveland County Rgnl, RNAV (GPS) RWY 5, Amdt 2
Shelby, NC, Shelby-Cleveland County Rgnl, RNAV (GPS) RWY 23, Orig
Mount Holly, NJ, South Jersey Rgnl, GPS RWY 8, Orig-A, CANCELLED
Mount Holly, NJ, South Jersey Rgnl, RNAV (GPS) RWY 8, Orig
Mount Holly, NJ, South Jersey Rgnl, RNAV (GPS) RWY 26, Orig
Canandaigua, NY, Canandaigua, RNAV (GPS) RWY 13, Amdt 1
Canandaigua, NY, Canandaigua, RNAV (GPS) RWY 31, Orig
Farmingdale, NY, Republic, ILS OR LOC RWY 14, Amdt 8A
Farmingdale, NY, Republic, RNAV (GPS) RWY 1, Amdt 1
Farmingdale, NY, Republic, RNAV (GPS) RWY 19, Amdt 1
Farmingdale, NY, Republic, RNAV (GPS) Y RWY 14, Amdt 1
Farmingdale, NY, Republic, RNAV (RNP) Z RWY 14, Orig
Cleveland, OH, Burke Lakefront, ILS OR LOC RWY 24R, Amdt 1
Cleveland, OH, Burke Lakefront, NDB OR GPS RWY 24R, Amdt 1A, CANCELLED
Cleveland, OH, Burke Lakefront, RNAV (GPS) RWY 24R, Orig
Columbus, OH, Rickenbacker Intl, ILS OR LOC RWY 5L, Amdt 1
Columbus, OH, Rickenbacker Intl, ILS OR LOC RWY 5R, ILS RWY 5R (SA CAT I), ILS RWY 5R (CAT II), Amdt 3
Columbus, OH, Rickenbacker Intl, ILS OR LOC RWY 23L, Amdt 1
Columbus, OH, Rickenbacker Intl, NDB RWY 5R, Amdt 2
Columbus, OH, Rickenbacker Intl, NDB RWY 23L, Amdt 2
Columbus, OH, Rickenbacker Intl, RNAV (GPS) RWY 5L, Orig
Columbus, OH, Rickenbacker Intl, RNAV (GPS) RWY 5R, Amdt 1
Columbus, OH, Rickenbacker Intl, RNAV (GPS) RWY 23R, Orig
Galion, OH, Galion Muni, RNAV (GPS) RWY 5, Orig
Galion, OH, Galion Muni, RNAV (GPS) RWY 23, Orig
Galion, OH, Galion Muni, VOR RWY 23, Amdt 13
Galion, OH, Galion Muni, VOR/DME RNAV OR GPS RWY 5, Amdt 2, CANCELLED
Mount Vernon, OH, Knox County, RNAV (GPS) RWY 10, Amdt 1
Mount Vernon, OH, Knox County, RNAV (GPS) RWY 28, Amdt 1
Toledo, OH, Toledo Executive Airport, RNAV (GPS) RWY 4, Orig
Toledo, OH, Toledo Executive Airport, RNAV (GPS) RWY 32, Orig
Toledo, OH, Toledo Executive Airport, VOR RWY 4, Amdt 9C
Toledo, OH, Toledo Executive Airport, VOR/DME OR GPS RWY 4, Amdt 2A, CANCELLED
Clinton, OK, Clinton Rgnl, RNAV (GPS) RWY 17, Amdt 2
Clinton, OK, Clinton Rgnl, RNAV (GPS) RWY 35, Amdt 3
Oklahoma City, OK, Sundance Airpark, RNAV (GPS) RWY 17, Amdt 1
Oklahoma City, OK, Sundance Airpark, RNAV (GPS) RWY 35, Amdt 1
Oklahoma City, OK, Will Rogers World, ILS OR LOC RWY 17L, Amdt 2
Oklahoma City, OK, Will Rogers World, ILS OR LOC RWY 17R, Amdt 11
Oklahoma City, OK, Will Rogers World, ILS OR LOC RWY 35R, ILS RWY 35R (SA CAT I), ILS RWY 35R (CAT II), Amdt 9
Oklahoma City, OK, Will Rogers World, ILS OR LOC/DME RWY 35L, Amdt 1
Oklahoma City, OK, Will Rogers World, RADAR 1, Amdt 21
Oklahoma City, OK, Will Rogers World, RNAV (GPS) RWY 13, Amdt 2
Oklahoma City, OK, Will Rogers World, RNAV (GPS) RWY 31, Amdt 1
Oklahoma City, OK, Will Rogers World, RNAV (GPS) Y RWY 17L, Amdt 2
Oklahoma City, OK, Will Rogers World, RNAV (GPS) Y RWY 17R, Amdt 3
Oklahoma City, OK, Will Rogers World, RNAV (GPS) Y RWY 35L, Amdt 3
Oklahoma City, OK, Will Rogers World, RNAV (GPS) Y RWY 35R, Amdt 2
Oklahoma City, OK, Will Rogers World, RNAV (RNP) Z RWY 17L, Amdt 2
Oklahoma City, OK, Will Rogers World, RNAV (RNP) Z RWY 17R, Orig
Oklahoma City, OK, Will Rogers World, RNAV (RNP) Z RWY 35L, Orig
Oklahoma City, OK, Will Rogers World, RNAV (RNP) Z RWY 35R, Amdt 1
Allentown, PA, Allentown Queen City Muni, RNAV (GPS) RWY 7, Amdt 1
Allentown, PA, Allentown Queen City Muni, VOR–B, Amdt 8
Shamokin, PA, Northumberland County, GPS RWY 26, Orig-A, CANCELLED
Shamokin, PA, Northumberland County, RNAV (GPS) RWY 8, Orig
Shamokin, PA, Northumberland County, RNAV (GPS) RWY 26, Orig
Shamokin, PA, Northumberland County, VOR RWY 8, Amdt 3B
Williamsport, PA, Williamsport Rgnl, RNAV (GPS) RWY 9, Orig
Williamsport, PA, Williamsport Rgnl, RNAV (GPS) RWY 12, Orig
Williamsport, PA, Williamsport Rgnl, RNAV (GPS) RWY 30, Orig

Williamsport, PA, Williamsport Rgnl, Takeoff Minimums and Obstacle DP, Amdt 5
Charleston, SC, Charleston AFB/Intl, Takeoff Minimums and Obstacle DP, Amdt 7
Conway, SC, Conway-Horry County, Takeoff Minimums and Obstacle DP, Amdt 1A
Rock Hill, SC, Rock Hill/York Co/Bryant Field, RNAV (GPS) RWY 2, Amdt 1
Rock Hill, SC, Rock Hill/York Co/Bryant Field, RNAV (GPS) RWY 20, Amdt 1
Copperhill, TN, Martin Campbell Field, RNAV (GPS) RWY 2, Orig
Copperhill, TN, Martin Campbell Field, RNAV (GPS) RWY 20, Orig
Copperhill, TN, Martin Campbell Field, Takeoff Minimums and Obstacle DP, Orig
Dayton, TN, Mark Anton, NDB RWY 3, Amdt 2
Dayton, TN, Mark Anton, RNAV (GPS) RWY 3, Orig
Dayton, TN, Mark Anton, RNAV (GPS) RWY 21, Amdt 1
Dayton, TN, Mark Anton, Takeoff Minimums & Obstacle DP, Amdt 3
Lafayette, TN, Lafayette Muni, NDB RWY 19, Amdt 3, CANCELLED
Millington, TN, Charles W. Baker, GPS RWY 18, Orig-A, CANCELLED
Millington, TN, Charles W. Baker, GPS RWY 36, Orig-B, CANCELLED
Millington, TN, Charles W. Baker, RNAV (GPS) RWY 18, Orig
Millington, TN, Charles W. Baker, RNAV (GPS) RWY 36, Orig
Millington, TN, Charles W. Baker, Takeoff Minimums & Obstacle DP, Amdt 1
Millington, TN, Charles W. Baker, VOR/DME RWY 18, Amdt 2
Somerville, TN Fayette County, RNAV (GPS) RWY 1, Orig
Somerville, TN Fayette County, RNAV (GPS) RWY 19, Amdt 2
Tullahoma, TN, Tullahoma Rgnl Arpt/Wm Northern Field, RNAV (GPS) RWY 6, Amdt 1
Tullahoma, TN, Tullahoma Rgnl Arpt/Wm Northern Field, RNAV (GPS) RWY 18, Amdt 1
Tullahoma, TN, Tullahoma Rgnl Arpt/Wm Northern Field, RNAV (GPS) RWY 24, Amdt 1
Tullahoma, TN, Tullahoma Rgnl Arpt/Wm Northern Field, RNAV (GPS) RWY 36, Amdt 1
Tullahoma, TN, Tullahoma Rgnl Arpt/Wm Northern Field, Takeoff Minimums & Obstacle DP, Amdt 1
Union City, TN, Everett—Stewart Rgnl, RNAV (GPS) RWY 1, Amdt 1
Union City, TN, Everett—Stewart Rgnl, Takeoff Minimums and Obstacle DP, Amdt 1
Fort Worth, TX, Fort Worth Alliance, RNAV (GPS) RWY 34R, Amdt 2
Blanding, UT, Blanding Muni, RNAV (GPS) RWY 35, Amdt 2
Ogden, UT, Ogden-Hinckley, ILS OR LOC RWY 3, Amdt 4C
Price, UT, Carbon County Rgnl/Buck Davis Field, RNAV (GPS) RWY 36, Amdt 1
Salt Lake City, UT, Salt Lake City Intl, RNAV (GPS) RWY 35, Amdt 1
Norfolk, VA, Chesapeake Rgnl, ILS OR LOC RWY 5, Amdt 1
Norfolk, VA, Chesapeake Rgnl, RNAV (GPS) RWY 5, Amdt 1
Norfolk, VA, Chesapeake Rgnl, RNAV (GPS) RWY 23, Orig
Norfolk, VA, Chesapeake Rgnl, VOR/DME RWY 23, Amdt 1
Norfolk, VA, Norfolk Intl, ILS OR LOC RWY 5, Amdt 25
Norfolk, VA, Norfolk Intl, ILS OR LOC RWY 23, Amdt 7
Norfolk, VA, Norfolk Intl, RNAV (GPS) Z RWY 5, Amdt 1
Norfolk, VA, Norfolk Intl, RNAV (GPS) Z RWY 23, Amdt 1
Norfolk, VA, Norfolk Intl, RNAV (RNP) Y RWY 5, Orig
Norfolk, VA, Norfolk Intl, RNAV (RNP) Y RWY 23, Orig
Richlands, VA, Tazewell County, RNAV (GPS) RWY 7, Orig
Suffolk, VA, Suffolk Executive, LOC RWY 4, Amdt 3
Suffolk, VA, Suffolk Executive, RNAV (GPS) RWY 4, Amdt 2
Suffolk, VA, Suffolk Executive, RNAV (GPS) RWY 7, Amdt 1
Suffolk, VA, Suffolk Executive, RNAV (GPS) RWY 22, Orig
Suffolk, VA, Suffolk Executive, RNAV (GPS) RWY 25, Orig
Suffolk, VA, Suffolk Executive, Takeoff Minimums and Obstacle DP, Amdt 4
Yakima, WA, Yakima Air Terminal/McAllister Field, RNAV (GPS) W RWY 27, Amdt 1
Yakima, WA, Yakima Air Terminal/McAllister Field, RNAV (GPS) X RWY 27, Amdt 1
Yakima, WA, Yakima Air Terminal/McAllister Field, RNAV (RNP) Y RWY 9, Orig
Yakima, WA, Yakima Air Terminal/McAllister Field, RNAV (RNP) Y RWY 27, Orig
Yakima, WA, Yakima Air Terminal/McAllister Field, RNAV (RNP) Z RWY 9, Orig
Yakima, WA, Yakima Air Terminal/McAllister Field, RNAV (RNP) Z RWY 27, Orig
Buckhannon, WV, Upshur County Rgnl, RNAV (GPS) RWY 11, Amdt 2
Buckhannon, WV, Upshur County Rgnl, RNAV (GPS) RWY 29, Amdt 2
Williamson, WV, Mingo County Rgnl, Takeoff Minimums and Obstacle DP, Orig

[FR Doc. 2011–19495 Filed 8–5–11; 8:45 am]

BILLING CODE 4910–13–P

DEPARTMENT OF TRANSPORTATION

Federal Aviation Administration

14 CFR Part 97

[Docket No. 30796; Amdt. No. 3437]

Standard Instrument Approach Procedures, and Takeoff Minimums and Obstacle Departure Procedures; Miscellaneous Amendments

AGENCY: Federal Aviation Administration (FAA), DOT.

ACTION: Final rule.

SUMMARY: This rule establishes, amends, suspends, or revokes Standard Instrument Approach Procedures (SIAPs) and associated Takeoff Minimums and Obstacle Departure Procedures for operations at certain airports. These regulatory actions are needed because of the adoption of new or revised criteria, or because of changes occurring in the National Airspace System, such as the commissioning of new navigational facilities, adding new obstacles, or changing air traffic requirements. These changes are designed to provide safe and efficient use of the navigable airspace and to promote safe flight operations under instrument flight rules at the affected airports.

DATES: This rule is effective August 8, 2011. The compliance date for each SIAP, associated Takeoff Minimums, and ODP is specified in the amendatory provisions.

The incorporation by reference of certain publications listed in the regulations is approved by the Director of the Federal Register as of August 8, 2011.

ADDRESSES: Availability of matter incorporated by reference in the amendment is as follows:

For Examination—

1. FAA Rules Docket, FAA Headquarters Building, 800 Independence Avenue, SW., Washington, DC 20591;

2. The FAA Regional Office of the region in which the affected airport is located;

3. The National Flight Procedures Office, 6500 South MacArthur Blvd., Oklahoma City, OK 73169 or

4. The National Archives and Records Administration (NARA). For information on the availability of this material at NARA, call 202–741–6030, or go to: *http://www.archives.gov/federal_register/code_of_federal_regulations/ibr_locations.html.*

Availability—All SIAPs are available online free of charge. Visit *nfdc.faa.gov* to register. Additionally, individual SIAP and Takeoff Minimums and ODP copies may be obtained from:

1.FAA Public Inquiry Center (APA–200), FAA Headquarters Building, 800 Independence Avenue, SW., Washington, DC 20591; or

2.The FAA Regional Office of the region in which the affected airport is located.

FOR FURTHER INFORMATION CONTACT: Harry J. Hodges, Flight Procedure Standards Branch (AFS–420)Flight Technologies and Programs Division, Flight Standards Service, Federal Aviation Administration, Mike

Monroney Aeronautical Center, 6500 South MacArthur Blvd., Oklahoma City, OK. 73169 (*Mail Address:* P.O. Box 25082 Oklahoma City, OK 73125) *telephone:* (405) 954–4164.

SUPPLEMENTARY INFORMATION: This rule amends Title 14, Code of Federal Regulations, part 97 (14 CFR part 97) by amending the referenced SIAPs. The complete regulatory description of each SIAP is listed on the appropriate FAA Form 8260, as modified by the National Flight Data Center (FDC)/Permanent Notice to Airmen (P–NOTAM), and is incorporated by reference in the amendment under 5 U.S.C. 552(a), 1 CFR part 51, and § 97.20 of Title 14 of the Code of Federal Regulations.

The large number of SIAPs, their complex nature, and the need for a special format make their verbatim publication in the **Federal Register** expensive and impractical. Further, airmen do not use the regulatory text of the SIAPs, but refer to their graphic depiction on charts printed by publishers of aeronautical materials. Thus, the advantages of incorporation by reference are realized and publication of the complete description of each SIAP contained in FAA form documents is unnecessary. This amendment provides the affected CFR sections and specifies the types of SIAP and the corresponding effective dates. This amendment also identifies the airport and its location, the procedure and the amendment number.

The Rule

This amendment to 14 CFR part 97 is effective upon publication of each separate SIAP as amended in the transmittal. For safety and timeliness of change considerations, this amendment incorporates only specific changes contained for each SIAP as modified by FDC/P–NOTAMs.

The SIAPs, as modified by FDC P–NOTAM, and contained in this amendment are based on the criteria contained in the U.S. Standard for Terminal Instrument Procedures (TERPS). In developing these changes to SIAPs, the TERPS criteria were applied only to specific conditions existing at the affected airports. All SIAP amendments in this rule have been previously issued by the FAA in a FDC NOTAM as an emergency action of immediate flight safety relating directly to published aeronautical charts. The circumstances which created the need for all these SIAP amendments requires making them effective in less than 30 days.

Because of the close and immediate relationship between these SIAPs and safety in air commerce, I find that notice and public procedure before adopting these SIAPs are impracticable and contrary to the public interest and, where applicable, that good cause exists for making these SIAPs effective in less than 30 days.

Conclusion

The FAA has determined that this regulation only involves an established body of technical regulations for which frequent and routine amendments are necessary to keep them operationally current. It, therefore—(1) Is not a ''significant regulatory action'' under Executive Order 12866; (2) is not a ''significant rule'' under DOT regulatory Policies and Procedures (44 FR 11034; February 26, 1979); and (3) does not warrant preparation of a regulatory evaluation as the anticipated impact is so minimal. For the same reason, the FAA certifies that this amendment will not have a significant economic impact on a substantial number of small entities under the criteria of the Regulatory Flexibility Act.

List of Subjects in 14 CFR Part 97

Air Traffic Control, Airports, Incorporation by reference, and Navigation (air).

Issued in Washington, DC, on July 22, 2011,

John M. Allen,

Director, Flight Standards Service.

Adoption of the Amendment

Accordingly, pursuant to the authority delegated to me, Title 14, Code of Federal regulations, part 97, 14 CFR part 97, is amended by amending Standard Instrument Approach Procedures, effective at 0901 UTC on the dates specified, as follows:

PART 97—STANDARD INSTRUMENT APPROACH PROCEDURES

■ 1. The authority citation for part 97 continues to read as follows:

Authority: 49 U.S.C. 106(g), 40103, 40106, 40113, 40114, 40120, 44502, 44514, 44701, 44719, 44721–44722.

■ 2. Part 97 is amended to read as follows:

§§ 97.23, 97.25, 97.27, 97.29, 97.31, 97.33, 97.35 [Amended]

By amending: § 97.23 VOR, VOR/DME, VOR or TACAN, and VOR/DME or TACAN; § 97.25 LOC, LOC/DME, LDA, LDA/DME, SDF, SDF/DME; § 97.27 NDB, NDB/DME; § 97.29 ILS, ILS/DME, MLS, MLS/DME, MLS/RNAV; § 97.31 RADAR SIAPs; § 97.33 RNAV SIAPs; and § 97.35 COPTER SIAPs, identified as follows:

** * * Effective Upon Publication*

AIRAC date	State	City	Airport	FDC No.	FDC date	Subject
25–Aug–11 ..	GA	Atlanta	Hartfield/Jackson Intl	1/1297	7/12/11	ILS OR LOC RWY 27L, Amdt 16.
25–Aug–11 ..	NY	New York	Long Island Mac Arthur	1/1400	7/12/11	RNAV (GPS) RWY 24, Amdt 1.
25–Aug–11 ..	GA	Atlanta	Cobb County—McCollum Field	1/1697	7/12/11	ILS OR LOC RWY 27, Amdt 4.
25–Aug–11 ..	MA	Nantucket	Nantucket Memorial	1/2321	7/12/11	ILS OR LOC RWY 24, Amdt 15D.
25–Aug–11 ..	HI	Lihue	Lihue	1/3821	7/12/11	VOR OR TACAN RWY 35, Amdt 7.
25–Aug–11 ..	IA	Dubuque	Dubuque Rgnl	1/7236	7/12/11	VOR RWY 36, Amdt 6.

[FR Doc. 2011–19507 Filed 8–5–11; 8:45 am]
BILLING CODE 4910–13–P

DEPARTMENT OF STATE

22 CFR Part 126

[Public Notice 7552]

RIN 1400–AC81

Amendment to the International Traffic in Arms Regulations: Updates to Country Policies, and Other Changes

AGENCY: Department of State.

ACTION: Final rule.

SUMMARY: The Department of State is amending the International Traffic in Arms Regulations (ITAR) to update country policies regarding Afghanistan, Côte d'Ivoire, Cyprus, the Democratic Republic of the Congo, Eritrea, Fiji, Iraq, Lebanon, Liberia, North Korea, Sierra Leone, Somalia, Sri Lanka, Yemen, and Zimbabwe, and to correct administrative and typographical errors.

DATES: *Effective Date:* This rule is effective August 8, 2011.

FOR FURTHER INFORMATION CONTACT: Nicholas Memos, Office of Defense Trade Controls Policy, Department of State, by *telephone:* (202) 663–2804; *fax:* (202) 261–8199; or *e-mail: memosni@state.gov. Attn:* Part 126, Country Policies.

SUPPLEMENTARY INFORMATION: A number of country policy updates and corrections are made in § 126.1, described as follows.

Afghanistan: Section 126.1(g) is amended to delete reference to the ''Afghan Interim Authority.'' The Islamic Republic of Afghanistan has replaced the Afghan Interim Authority as the Government of Afghanistan.

The Security Council committees established pursuant to United Nations Security Council (UNSC) resolutions 1267 (1999) and 1988 (2011), concerning Al-Qaida and the Taliban and associated individuals and entities, oversee the implementation by U.N. member states of sanctions measures (including arms embargoes) imposed by the Security Council on Al-Qaida and the Taliban, and those individuals, groups, undertakings, and entities associated with them. The committees maintain lists of individuals, groups, undertakings, and entities subject to the sanctions. By UNSC resolutions 1267 (1999), 1333 (2000), 1390 (2002), as reiterated in resolutions 1455 (2003), 1526 (2004), 1617 (2005), 1735 (2006), 1822 (2008) and 1904 (2009), and reiterated and modified by resolutions 1988 and 1989 (2011), the Security Council has obliged all member countries to prevent the direct or indirect supply, sale, or transfer of arms and related materiel to the individuals, groups, undertakings, and entities placed on these lists. Section 126.1(g) is amended accordingly.

Côte d'Ivoire: On November 15, 2004, the United Nations Security Council adopted resolution 1572, which provided for an arms embargo with certain exceptions. Resolution 1946 of October 15, 2010, reaffirmed the embargo, and added to the exceptions provided in resolution 1572. Resolution 1980 of April 28, 2011, renewed the terms of the modified arms embargo. Section 126.1(q) is added to reflect the arms embargo and exceptions thereto.

Cyprus: Section 126.1(r) is added to reflect the U.S. policy on arms exports to Cyprus, first published by the Department of State on December 18, 1992 (57 FR 60265).

Democratic Republic of the Congo: On March 31, 2008, the United Nations Security Council adopted resolution 1807, which modified the existing Democratic Republic of the Congo arms embargo. Subsequent resolutions (1857, adopted on December 22, 2008; 1896, adopted on November 30, 2009; and 1952, adopted on November 29, 2010) renewed the terms of the modified arms embargo in resolution 1807. Section 126.1(i) is amended to reflect the prohibitions contained in resolution 1807.

Eritrea: On December 23, 2009, the United Nations Security Council adopted resolution 1907, which prohibits the sale, supply or transfer of arms and related materiel to Eritrea, or the sale, supply or transfer of arms and related materiel from Eritrea. Consequently, Eritrea is added to the list of countries subject to a UNSC arms embargo contained in § 126.1(c). Since October 3, 2008, and as identified in § 126.1(a), it has been the policy of the United States to deny licenses and other approvals for exports and imports of defense articles and defense services, destined for or originating in Eritrea.

Fiji: As a result of a military coup in Fiji, as of December 2006, the United States suspended all sales and deliveries of defense articles and defense services to Fiji. Such sales in support of peacekeeping activities are excepted, and will be reviewed on a case-by-case basis. Section 126.1(p) is added to reflect the policy and exceptions thereto.

Iraq: Section 126.1(f) is amended to remove reference to lapsed statutory authority and requirements.

Lebanon: On August 11, 2006, the United Nations Security Council adopted resolution 1701, establishing an arms embargo, with the exception that it would not apply to arms and related materiel for the United Nations Interim Force in Lebanon or as authorized by the Government of Lebanon. Most recently, resolution 1937 (adopted on August 30, 2010) emphasized the importance of full compliance with the terms of the arms embargo. Section 126.1(t) is added to reflect the arms embargo and exceptions thereto.

Liberia: On December 17, 2009, the United Nations Security Council adopted resolution 1903, which modified the existing Liberia arms embargo set forth in resolution 1521 (2003) and modified by resolutions 1683 and 1731 (2006). Subsequently, resolution 1961 (adopted on December 17, 2010) renewed the terms of the modified arms embargo. Section 126.1(o) is added to reflect the arms embargo and exceptions thereto. In addition, § 126.1(a) is revised to remove Liberia as an example of a country with which the United States maintains an arms embargo.

North Korea: On October 24, 2008, the Secretary of State rescinded the determination of January 20, 1988, that North Korea repeatedly provided support for acts of international terrorism. The rescission satisfied the provisions of section 620(c) of the Foreign Assistance Act of 1961, Public Law 87–195, as amended (22 U.S.C. 2371(c)), and section 40(f) of the Arms Export Control Act, Public Law 90–629, as amended (22 U.S.C. 2780(f)). Consequently, § 126.1(d) is amended to remove mention of North Korea. However, North Korea is subject to an arms embargo according to the United Nations Security Council resolutions 1718 (2006) and 1874 (2009). Consequently, North Korea remains subject to the policy of the United States to deny licenses and other approvals for exports and imports of defense articles and defense services, destined for or originating in North Korea (§ 126.1(a)).

Sierra Leone: On September 29, 2010, the United Nations Security Council adopted resolution 1940, which terminated the prohibition of the sale or supply of arms and related materiel to non-governmental forces in Sierra Leone adopted in UNSC resolution 1171 of June 5, 1998. Resolution 1171, in turn, had modified the provision of UNSC resolution 1132, adopted October 8, 1997, which prohibited the sale or supply of arms and related materiel to Sierra Leone. The United States, which had maintained the complete prohibition as provided in resolution

1132, now lifts the prohibition, in accordance with UNSC resolution 1940. Consequently, Sierra Leone is removed from the list of countries subject to a U.N. arms embargo at § 126.1(c) and is no longer considered a proscribed country under the ITAR.

Somalia: Title IV of the William Wilberforce Trafficking Victims Protection Reauthorization Act of 2008, the Child Soldiers Prevention Act of 2008, provides in Section 404 that no licenses for direct commercial sales of military equipment may be issued to the government of a country that is clearly identified as having governmental armed forces or government-supported armed groups that recruit and use child soldiers. Somalia has been so identified by the U.S. government in the ''Trafficking in Persons Report,'' dated June 2010. Therefore, § 126.1(m) is amended to reflect the statutory bar on issuance of licenses for defense articles for the purpose of developing security sector institutions in Somalia.

Sri Lanka: In accordance with Section 7089 of the Consolidated Appropriations Act, 2010 (Pub. L. 111–117), the Department of State is amending § 126.1(n) to update the policy toward Sri Lanka. It is the policy of the United States to deny licenses and other approvals to export or otherwise transfer defense articles and defense services to Sri Lanka except, on a case-by-case basis, for humanitarian demining.

Yemen: Section 126.1(u) is added to set out the U.S. policy on arms exports to Yemen, first published by the Department of State on December 16, 1992 (57 FR 59852).

Zimbabwe: Section 126.1(s) is added to set out U.S. policy on arms exports to Zimbabwe, first published by the Department of State on April 17, 2002 (67 FR 18978), and modified in a notice published on July 23, 2002 (67 FR 48242).

Additionally, § 126.1(j) is amended to standardize usage and structure, §§ 126.1(l) and (m) are amended to correct the spelling of ''United States,'' and the title of § 126.14 is amended to add the country ''Sweden.''

Regulatory Analysis and Notices

Administrative Procedure Act

The Department of State is of the opinion that controlling the import and export of defense articles and services is a foreign affairs function of the United States Government and that rules implementing this function are exempt from § 553 (Rulemaking) and § 554 (Adjudications) of the Administrative Procedure Act. These rules directly reflect foreign policy decisions of the President, which are not subject to the notice and comment procedures of the Administrative Procedure Act. Since this rule is exempt from 5 U.S.C. 553, it is the view of the Department of State that the provisions of § 553(d) do not apply to this rulemaking. Therefore, this rule is effective upon publication.

Regulatory Flexibility Act

Since this amendment is not subject to the notice-and-comment procedures of 5 U.S.C. 553, it does not require analysis under the Regulatory Flexibility Act.

Unfunded Mandates Reform Act of 1995

This amendment does not involve a mandate that will result in the expenditure by State, local, and tribal governments, in the aggregate, or by the private sector, of $100 million or more in any year and it will not significantly or uniquely affect small governments. Therefore, no actions were deemed necessary under the provisions of the Unfunded Mandates Reform Act of 1995.

Executive Order 13175

The Department has determined that this rule will not have tribal implications, will not impose substantial direct compliance costs on Indian tribal governments, and will not pre-empt tribal law. Accordingly, the requirements of Executive Order 13175 do not apply to this rule.

Small Business Regulatory Enforcement Fairness Act of 1996

This amendment has been found not to be a major rule within the meaning of the Small Business Regulatory Enforcement Fairness Act of 1996.

Executive Orders 12372 and 13132

This amendment will not have substantial direct effects on the States, on the relationship between the national government and the States, or on the distribution of power and responsibilities among the various levels of government. Therefore, in accordance with Executive Order 13132, it is determined that this amendment does not have sufficient federalism implications to require consultations or warrant the preparation of a federalism summary impact statement. The regulations implementing Executive Order 12372 regarding intergovernmental consultation on Federal programs and activities do not apply to this amendment.

Executive Order 12866

The Department of State does not consider this rule to be a ''significant regulatory action'' under Executive Order 12866, section 3(f), Regulatory Planning and Review. The Department is of the opinion that controlling the import and export of defense articles and services is a foreign affairs function of the United States Government and that rules governing the conduct of this function are exempt from the requirements of Executive Order 12866.

Executive Order 13563

The Department of State has considered this rule in light of Executive Order 13563, dated January 18, 2011, and affirms that this regulation is consistent with the guidance therein.

Executive Order 12988

The Department of State has reviewed the amendment in light of sections 3(a) and 3(b)(2) of Executive Order 12988 to eliminate ambiguity, minimize litigation, establish clear legal standards, and reduce burden.

Paperwork Reduction Act

This rule does not impose any new reporting or recordkeeping requirements subject to the Paperwork Reduction Act, 44 U.S.C. Chapter 35.

List of Subjects in 22 CFR Part 126

Arms and munitions, Exports.

Accordingly, for the reasons set forth above, Title 22, Chapter I, Subchapter M, part 126, is amended as follows:

PART 126—GENERAL POLICIES AND PROVISIONS

■ 1. The authority citation for part 126 is revised to read as follows:

Authority: Secs. 2, 38, 40, 42, and 71, Pub. L. 90–629, 90 Stat. 744 (22 U.S.C. 2752, 2778, 2780, 2791, and 2797); E.O. 11958, 42 FR 4311; 3 CFR, 1977 Comp., p. 79; 22 U.S.C. 2651a; 22 U.S.C. 287c; E.O. 12918, 59 FR 28205; 3 CFR, 1994 Comp., p. 899; Sec. 1225, Pub. L. 108–375; Sec. 7089, Pub. L. 111–117.

■ 2. Section 126.1 is amended by revising the section heading and paragraphs (a), (c), (d), (f), (g), (i), (j), (l) introductory text, (m), and (n), and by adding paragraphs (o) through (u), to read as follows:

§ 126.1 Prohibited exports, imports, and sales to or from certain countries.

(a) *General.* It is the policy of the United States to deny licenses and other approvals for exports and imports of defense articles and defense services destined for or originating in certain countries. This policy applies to Belarus, Cuba, Eritrea, Iran, North

Korea, Syria, and Venezuela. This policy also applies to countries with respect to which the United States maintains an arms embargo (e.g., Burma, China, and the Republic of the Sudan) or whenever an export would not otherwise be in furtherance of world peace and the security and foreign policy of the United States. Information regarding certain other embargoes appears elsewhere in this section. Comprehensive arms embargoes are normally the subject of a State Department notice published in the **Federal Register**. The exemptions provided in the regulations in this subchapter, except § 123.17 of this subchapter, do not apply with respect to articles originating in or for export to any proscribed countries, areas, or persons in this § 126.1.

* * * * *

(c) *Exports and sales prohibited by United Nations Security Council embargoes.* Whenever the United Nations Security Council mandates an arms embargo, all transactions that are prohibited by the embargo and that involve U.S. persons (see § 120.15 of this subchapter) anywhere, or any person in the United States, and defense articles or services of a type enumerated on the United States Munitions List (22 CFR part 121), irrespective of origin, are prohibited under the ITAR for the duration of the embargo, unless the Department of State publishes a notice in the **Federal Register** specifying different measures. This would include, but is not limited to, transactions involving trade by U.S. persons who are located inside or outside of the United States in defense articles or services of U.S. or foreign origin that are located inside or outside of the United States. United Nations Security Council arms embargoes include, but are not necessarily limited to, the following countries:

(1) Cote d'Ivoire (see also paragraph (q) of this section).

(2) Democratic Republic of Congo (see also paragraph (i) of this section).

(3) Eritrea.

(4) Iraq (see also paragraph (f) of this section).

(5) Iran.

(6) Lebanon (see also paragraph (t) of this section).

(7) Liberia (see also paragraph (o) of this section).

(8) Libya (see also paragraph (k) of this section).

(9) North Korea.

(10) Somalia (see also paragraph (m) of this section).

(11) Sudan.

(d) *Terrorism.* Exports to countries which the Secretary of State has determined to have repeatedly provided support for acts of international terrorism are contrary to the foreign policy of the United States and are thus subject to the policy specified in paragraph (a) of this section and the requirements of section 40 of the Arms Export Control Act (22 U.S.C. 2780) and the Omnibus Diplomatic Security and Anti-Terrorism Act of 1986 (22 U.S.C. 4801, note). The countries in this category are: Cuba, Iran, Sudan, and Syria.

* * * * *

(f) *Iraq.* It is the policy of the United States to deny licenses or other approvals for exports and imports of defense articles and defense services, destined for or originating in Iraq, except that a license or other approval may be issued, on a case-by-case basis for:

(1) Non-lethal military equipment; and

(2) Lethal military equipment required by the Government of Iraq or coalition forces.

(g) *Afghanistan.* It is the policy of the United States to deny licenses or other approvals for exports and imports of defense articles and defense services, destined for or originating in Afghanistan, except that a license or other approval may be issued, on a case-by-case basis, for the Government of Afghanistan or coalition forces. In addition, the names of individuals, groups, undertakings, and entities subject to broad prohibitions, including arms embargoes, due to their affiliation with the Taliban, Al-Qaida, or those associated with them, are published in lists maintained by the Security Council committees established pursuant to United Nations Security Council resolutions 1267 and 1988.

* * * * *

(i) *Democratic Republic of the Congo.* It is the policy of the United States to deny licenses or other approvals for exports or imports of defense articles and defense services destined for or originating in the Democratic Republic of the Congo, except that a license or other approval may be issued, on a case-by-case basis, for:

(1) Defense articles and defense services for the Government of the Democratic Republic of the Congo as notified in advance to the Committee of the Security Council concerning the Democratic Republic of the Congo;

(2) Defense articles and defense services intended solely for the support of or use by the United Nations Organization Mission in the Democratic Republic of the Congo (MONUC);

(3) Personal protective gear temporarily exported to the Democratic Republic of the Congo by United Nations personnel, representatives of the media, and humanitarian and development workers and associated personnel, for their personal use only; and

(4) Non-lethal military equipment intended solely for humanitarian or protective use, and related technical assistance and training, as notified in advance to the Committee of the Security Council concerning the Democratic Republic of the Congo.

(j) *Haiti.* (1) It is the policy of the United States to deny licenses or other approvals for exports or imports of defense articles and defense services destined for or originating in Haiti, except that a license or other approval may be issued, on a case-by-case basis, for:

(i) Defense articles and defense services intended solely for the support of or use by security units that operate under the command of the Government of Haiti;

(ii) Defense articles and defense services intended solely for the support of or use by the United Nations or a United Nations-authorized mission; and

(iii) Personal protective gear for use by personnel from the United Nations and other international organizations, representatives of the media, and development workers and associated personnel.

(2) All shipments of arms and related materials consistent with such exemptions shall only be made to Haitian security units as designated by the Government of Haiti, in coordination with the U.S. Government.

* * * * *

(l) *Vietnam.* It is the policy of the United States to deny licenses or other approvals for exports or imports of defense articles and defense services destined for or originating in Vietnam, except that a license or other approval may be issued, on a case-by-case basis, for:

* * * * *

(m) *Somalia.* It is the policy of the United States to deny licenses or other approvals for exports or imports of defense articles and defense services destined for or originating in Somalia, except that a license or other approval may be issued, on a case-by-case basis, for:

(1) Defense articles and defense services intended solely for support for the African Union Mission to Somalia (AMISOM); and

(2) Defense services for the purpose of helping develop security sector institutions in Somalia that further the objectives of peace, stability and

reconciliation in Somalia, after advance notification of the proposed export by the United States Government to the UNSC Somalia Sanctions Committee and the absence of a negative decision by that committee.

Exemptions from the licensing requirement may not be used with respect to any export to Somalia unless specifically authorized in writing by the Directorate of Defense Trade Controls.

(n) *Sri Lanka.* It is the policy of the United States to deny licenses or other approvals for exports or imports of defense articles and defense services destined for or originating in Sri Lanka, except that a license or other approval may be issued, on a case-by-case basis, for humanitarian demining.

(o) *Liberia.* It is the policy of the United States to deny licenses or other approvals for exports or imports of defense articles and defense services destined for or originating in Liberia, except that a license or other approval may be issued, on a case-by-case basis, for:

(1) Defense articles and defense services for the Government of Liberia as notified in advance to the Committee of the Security Council concerning Liberia;

(2) Defense articles and defense services intended solely for support of or use by the United Nations Mission in Liberia (UNMIL);

(3) Personal protective gear temporarily exported to Liberia by United Nations personnel, representatives of the media and humanitarian and development workers and associated personnel, for their personal use only; and

(4) Non-lethal military equipment intended solely for humanitarian or protective use, and related technical assistance and training, as notified in advance to the Committee of the Security Council concerning Liberia.

(p) *Fiji.* It is the policy of the United States to deny licenses or other approvals for exports or imports of defense articles and defense services destined for or originating in Fiji, except that a license or other approval may be issued, on a case-by-case basis, for defense articles and defense services intended solely in support of peacekeeping activities.

(q) *Côte d'Ivoire.* It is the policy of the United States to deny licenses or other approvals for exports or imports of defense articles and defense services destined for or originating in Côte d'Ivoire, except that a license or other approval may be issued, on a case-by-case basis, for:

(1) Defense articles and defense services intended solely for support of or use by the United Nations Operations in Côte d'Ivoire (UNOCI) and the French forces that support them;

(2) Non-lethal military equipment intended solely for humanitarian or protective use, and related technical assistance and training, as approved in advance to the Committee of the Security Council concerning Côte d'Ivoire;

(3) Personal protective gear temporarily exported to Côte d'Ivoire by United Nations personnel, representatives of the media and humanitarian and development workers and associated personnel, for their personal use only;

(4) Supplies temporarily exported to Côte d'Ivoire to the forces of a State which is taking action, in accordance with international law, solely and directly to facilitate the evacuation of its nationals and those for whom it has consular responsibility in Côte d'Ivoire, as notified in advance to the Committee of the Security Council concerning Côte d'Ivoire; and

(5) Non-lethal equipment intended solely to enable the Ivorian security forces to use only appropriate and proportionate force while maintaining public order, as approved in advance by the Sanctions Committee.

(r) *Cyprus.* It is the policy of the United States to deny licenses or other approvals, for exports or imports of defense articles and defense services destined for or originating in Cyprus, except that a license or other approval may be issued, on a case-by-case basis, for the United Nations Forces in Cyprus (UNFICYP) or for civilian end-users.

(s) *Zimbabwe.* It is the policy of the United States to deny licenses or other approvals for exports or imports of defense articles and defense services destined for or originating in Zimbabwe, except that a license or other approval may be issued, on a case-by-case basis, for the temporary export of firearms and ammunition for personal use by individuals (not for resale or retransfer, including to the Government of Zimbabwe). Such exports may meet the licensing exemptions of § 123.17 of this subchapter.

(t) *Lebanon.* It is the policy of the United States to deny licenses or other approvals for exports or imports of defense articles and defense services destined for or originating in Lebanon, except that a license or other approval may be issued, on a case-by-case basis, for the United Nations Interim Force in Lebanon (UNIFIL) and as authorized by the Government of Lebanon.

(u) *Yemen.* It is the policy of the United States to deny licenses or other approvals for exports or imports of defense articles and defense services destined for or originating in Yemen, except that a license or other approval may be issued, on a case-by-case basis, for:

(1) Non-lethal defense articles and defense services; and

(2) Non-lethal, safety-of-use defense articles (e.g., cartridge actuated devices, propellant actuated devices and technical manuals for military aircraft for purposes of enhancing the safety of the aircraft crew) for lethal end-items.

■ 3. Section 126.14 is amended by revising the section heading to read as follows:

§ 126.14 Special comprehensive export authorizations for NATO, Australia, Japan, and Sweden.

* * * * *

Dated: August 1, 2011.

Ellen O. Tauscher,

Under Secretary, Arms Control and International Security, Department of State.

[FR Doc. 2011–20028 Filed 8–5–11; 8:45 am]

BILLING CODE 4710–25–P

DEPARTMENT OF HOMELAND SECURITY

Coast Guard

33 CFR Part 165

[Docket No. USCG–2011–0695]

RIN 1625–AA00

Safety Zone; Allegheny River; Pittsburgh, PA

AGENCY: Coast Guard, DHS.

ACTION: Temporary final rule.

SUMMARY: The Coast Guard is establishing a temporary safety zone on the Allegheny River from mile marker 5.7 to mile marker 5.9 (the parking area on either side of the 13th Street boat ramp), extending 300 feet from the right descending bank. The safety zone is needed to protect the public from the hazards associated with the Guyasuta Days Festival fireworks display. Entry into, movement within, and departure from this temporary safety zone, while it is activated and enforced, is prohibited, unless authorized by the Captain of the Port or a designated representative.

DATES: This rule is effective from 9:30 p.m. August 6, 2011 through 11 p.m. August 7, 2011.

ADDRESSES: Documents indicated in this preamble as being available in the docket are part of docket USCG–2011–0695 and are available online by going

to *http://www.regulations.gov,* inserting USCG–2011–0695 in the ''Keyword'' box, and then clicking ''Search.'' They are also available for inspection or copying at the Docket Management Facility (M–30), U.S. Department of Transportation, West Building Ground Floor, Room W12–140, 1200 New Jersey Avenue, SE., Washington, DC 20590, between 9 a.m. and 5 p.m., Monday through Friday, except Federal holidays.

FOR FURTHER INFORMATION CONTACT: If you have questions on this temporary rule, call or e-mail Lieutenant Junior Grade Robyn Hoskins, Marine Safety Unit Pittsburgh, Coast Guard; telephone 412–644–5808, e-mail *Robyn.G.Hoskins@uscg.mil.* If you have questions on viewing the docket, call Renee V. Wright, Program Manager, Docket Operations, telephone 202–366–9826.

SUPPLEMENTARY INFORMATION:

Regulatory Information

The Coast Guard is issuing this temporary final rule without prior notice and opportunity to comment pursuant to authority under section 4(a) of the Administrative Procedure Act (APA) (5 U.S.C. 553(b)). This provision authorizes an agency to issue a rule without prior notice and opportunity to comment when the agency for good cause finds that those procedures are ''impracticable, unnecessary, or contrary to the public interest.'' Under 5 U.S.C. 553(b)(B), the Coast Guard finds that good cause exists for not publishing a notice of proposed rulemaking (NPRM) with respect to this rule. This temporary safety zone will be included in a separate ongoing and upcoming rulemaking project providing notice and comment to update the list of annually recurring events and safety zones in the CFR. Publishing an individual NPRM would be impracticable because immediate action is needed to protect the public from the possible hazards associated with the Guyasuta Days Festival fireworks display that will occur in the city of Pittsburgh, PA on August 6, 2011 (rain date August 7, 2011).

Under 5 U.S.C. 553(d)(3), the Coast Guard finds that good cause exists for making this rule effective less than 30 days after publication in the **Federal Register.** This temporary safety zone will be included in a separate ongoing and upcoming rulemaking project providing notice and comment to update the list of annually recurring events and safety zones in the CFR. Publishing an individual NPRM and providing a full 30 day notice and delaying the effective date would be impracticable based on the short notice received for the event and the short period that the safety zone will be in place. Immediate action is needed to provide safety and protection during the Guyasuta Days Festival fireworks display that will occur in the city of Pittsburgh, PA on August 6, 2011 (rain date August 7, 2011).

Basis and Purpose

The Coast Guard is establishing a temporary safety zone on the Allegheny River from mile marker 5.7 to mile marker 5.9 (the parking area on either side of the 13th Street boat ramp), extending 300 feet from the right descending bank. The temporary safety zone is needed to protect the public from the hazards associated with the Guyasuta Days Festival fireworks display.

Discussion of Rule

The Coast Guard is establishing a temporary safety zone on the Allegheny River from mile marker 5.7 to mile marker 5.9 (the parking area on either side of the 13th Street boat ramp), extending 300 feet from the right descending bank. Vessels shall not enter into, depart from, or move within this safety zone without permission from the Captain of the Port Pittsburgh or his authorized representative. Persons or vessels requiring entry into or passage through a safety zone must request permission from the Captain of the Port Pittsburgh, or a designated representative. They may be contacted on VHF–FM Channel 13 or 16, or through Coast Guard Sector Ohio Valley at 1–800–253–7465. This rule will be enforced from 9:30 p.m. to 11 p.m. on August 6, 2011, with a rain date of August 7, 2011 from 9:30 p.m. to 11 p.m. The Captain of the Port Pittsburgh will inform the public through broadcast notices to mariners of the enforcement period for the safety zone as well as any changes in the planned schedule.

Regulatory Analyses

We developed this rule after considering numerous statutes and executive orders related to rulemaking. Below we summarize our analyses based on 13 of these statutes or executive orders.

Regulatory Planning and Review

This rule is not a significant regulatory action under section 3(f) of Executive Order 12866, Regulatory Planning and Review, and does not require an assessment of potential costs and benefits under section 6(a)(3) of that Order. The Office of Management and Budget has not reviewed it under that Order.

Although this regulation will restrict access to the area, the effect of the rule will not be significant because this rule will be in effect for a short period of time and notifications to the marine community will be made through broadcast notices to mariners. The impacts on routine navigation are expected to be minimal.

Small Entities

Under the Regulatory Flexibility Act (5 U.S.C. 601–612), we have considered whether this rule would have a significant economic impact on a substantial number of small entities. The term ''small entities'' comprises small businesses, not-for-profit organizations that are independently owned and operated and are not dominant in their fields, and governmental jurisdictions with populations of less than 50,000.

The Coast Guard certifies under 5 U.S.C. 605(b) that this rule will not have a significant economic impact on a substantial number of small entities.

This rule will affect the following entities, some of which may be small entities: The owners or operators of vessels intending to transit that portion of the Allegheny River from mile marker 5.7 to mile marker 5.9, 300 feet from the right descending bank from 9:30 p.m. to 11 p.m. on August 6, 2011, with a rain date of August 7, 2011 from 9:30 p.m. to 11 p.m.

This temporary safety zone will not have a significant economic impact on a substantial number of small entities for the following reasons. This rule will be enforced for a short period of time, on a weekend day, and during a time when vessel traffic is low.

Assistance for Small Entities

Under section 213(a) of the Small Business Regulatory Enforcement Fairness Act of 1996 (Pub. L. 104–121), we offer to assist small entities in understanding the rule so that they can better evaluate its effects on them and participate in the rulemaking process.

Small businesses may send comments on the actions of Federal employees who enforce, or otherwise determine compliance with, Federal regulations to the Small Business and Agriculture Regulatory Enforcement Ombudsman and the Regional Small Business Regulatory Fairness Boards. The Ombudsman evaluates these actions annually and rates each agency's responsiveness to small business. If you wish to comment on actions by employees of the Coast Guard, call 1–888–REG–FAIR (1–888–734–3247).

The Coast Guard will not retaliate against small entities that question or complain about this rule or any policy or action of the Coast Guard.

Collection of Information

This rule calls for no new collection of information under the Paperwork Reduction Act of 1995 (44 U.S.C. 3501–3520).

Federalism

A rule has implications for federalism under Executive Order 13132, Federalism, if it has a substantial direct effect on State or local governments and would either preempt State law or impose a substantial direct cost of compliance on them. We have analyzed this rule under that Order and have determined that it does not have implications for federalism.

Unfunded Mandates Reform Act

The Unfunded Mandates Reform Act of 1995 (2 U.S.C. 1531–1538) requires Federal agencies to assess the effects of their discretionary regulatory actions. In particular, the Act addresses actions that may result in the expenditure by a State, local, or tribal government, in the aggregate, or by the private sector of $100,000,000 or more in any one year. Though this rule will not result in such an expenditure, we do discuss the effects of this rule elsewhere in this preamble.

Taking of Private Property

This rule will not affect a taking of private property or otherwise have taking implications under Executive Order 12630, Governmental Actions and Interference with Constitutionally Protected Property Rights.

Civil Justice Reform

This rule meets applicable standards in sections 3(a) and 3(b)(2) of Executive Order 12988, Civil Justice Reform, to minimize litigation, eliminate ambiguity, and reduce burden.

Protection of Children

We have analyzed this rule under Executive Order 13045, Protection of Children from Environmental Health Risks and Safety Risks. This rule is not an economically significant rule and does not create an environmental risk to health or risk to safety that may disproportionately affect children.

Indian Tribal Governments

This rule does not have tribal implications under Executive Order 13175, Consultation and Coordination with Indian Tribal Governments, because it does not have a substantial direct effect on one or more Indian tribes, on the relationship between the Federal Government and Indian tribes, or on the distribution of power and responsibilities between the Federal Government and Indian tribes.

Energy Effects

We have analyzed this rule under Executive Order 13211, Actions Concerning Regulations That Significantly Affect Energy Supply, Distribution, or Use. We have determined that it is not a ''significant energy action'' under that order because it is not a ''significant regulatory action'' under Executive Order 12866 and is not likely to have a significant adverse effect on the supply, distribution, or use of energy. The Administrator of the Office of Information and Regulatory Affairs has not designated it as a significant energy action. Therefore, it does not require a Statement of Energy Effects under Executive Order 13211.

Technical Standards

The National Technology Transfer and Advancement Act (NTTAA) (15 U.S.C. 272 note) directs agencies to use voluntary consensus standards in their regulatory activities unless the agency provides Congress, through the Office of Management and Budget, with an explanation of why using these standards would be inconsistent with applicable law or otherwise impractical. Voluntary consensus standards are technical standards (e.g., specifications of materials, performance, design, or operation; test methods; sampling procedures; and related management systems practices) that are developed or adopted by voluntary consensus standards bodies.

This rule does not use technical standards. Therefore, we did not consider the use of voluntary consensus standards.

Environment

We have analyzed this rule under Department of Homeland Security Management Directive 023–01 and Commandant Instruction M16475.lD, which guide the Coast Guard in complying with the National Environmental Policy Act of 1969 (NEPA) (42 U.S.C. 4321–4370f), and have concluded this action is one of a category of actions which do not individually or cumulatively have a significant effect on the human environment. This rule is categorically excluded, under figure 2–1, paragraph (34)(g), of the Instruction. This rule involves establishing, disestablishing, or changing Regulated Navigation Areas and security or safety zones.

An environmental analysis checklist and a categorical exclusion determination are available in the docket where indicated under **ADDRESSES**.

List of Subjects in 33 CFR Part 165

Harbors, Marine safety, Navigation (water), Reporting and recordkeeping requirements, Security measures, Waterways.

For the reasons discussed in the preamble, the Coast Guard amends 33 CFR part 165 as follows:

PART 165—REGULATED NAVIGATION AREAS AND LIMITED ACCESS AREAS

■ 1. The authority citation for part 165 continues to read as follows:

Authority: 33 U.S.C. 1226, 1231; 46 U.S.C. Chapter 701; 50 U.S.C. 191, 195; 33 CFR 1.05–1(g), 6.04–1, 6.04–6, and 160.5; Pub. L. 107–295, 116 Stat. 2064; Department of Homeland Security Delegation No. 0170.1.

■ 2. Add § 165.T08–0695 to read as follows:

§ 165.T08–0695 Safety Zone; Allegheny River, Pittsburgh, PA.

(a) *Location.* The following area is a safety zone: All waters of the Allegheny River from mile marker 5.7 to mile marker 5.9, extending 300 feet out from the right descending bank. These markings are based on the USACE's *Allegheny River Navigation Charts* (Chart 1, January 2004).

(b) *Effective date.* This rule is effective from 9:30 p.m. August 6, 2011 through 11 p.m. August 7, 2011.

(c) *Periods of enforcement.* This rule will be enforced from 9:30 p.m. through 11 p.m. on August 6, 2011, with a rain date of August 7, 2011 from 9:30 p.m. to 11 p.m. The Captain of the Port Pittsburgh or a designated representative will inform the public through broadcast notices to mariners of the enforcement period for the safety zone as well as any changes in the planned schedule.

(d) *Regulations.* (1) In accordance with the general regulations in 33 CFR part 165, subpart C, entry into this zone is prohibited unless authorized by the Captain of the Port Pittsburgh.

(2) Persons or vessels requiring entry into or passage through a safety zone must request permission from the Captain of the Port Pittsburgh or a designated representative. They may be contacted on VHF–FM Channel 13 or 16, or through Coast Guard Sector Ohio Valley at 1–800–253–7465.

(3) All persons and vessels shall comply with the instructions of the Captain of the Port Pittsburgh and designated on-scene U.S. Coast Guard

patrol personnel. On-scene U.S. Coast Guard patrol personnel includes Commissioned, Warrant, and Petty Officers of the U.S. Coast Guard.

Dated: July 18, 2011.

R.V. Timme,

Commander, U.S. Coast Guard, Captain of the Port Pittsburgh.

[FR Doc. 2011–19997 Filed 8–5–11; 8:45 am]

BILLING CODE 9110–04–P

DEPARTMENT OF HOMELAND SECURITY

Coast Guard

33 CFR Part 165

[Docket No. USCG–2011–0505]

Security Zone; 2011 Seattle Seafair Fleet Week Moving Vessels, Puget Sound, WA; Correction

AGENCY: Coast Guard, DHS.

ACTION: Temporary final rule; correction.

SUMMARY: On July 11, 2011 the Coast Guard published a temporary final rule in the **Federal Register** (76 FR 40617), establishing temporary security zones around visiting foreign and domestic military vessels that are participating the 2011 Seattle's Seafair Fleet Week. This document corrects the list of visiting military vessels for which the rule will establish security zones.

DATES: This correction is effective from 8 a.m. on August 3, 2011 through 5 p.m. on August 8, 2011.

FOR FURTHER INFORMATION CONTACT: If you have questions on this correction document, call or e-mail ENS Anthony P. LaBoy, Coast Guard Sector Puget Sound, Waterways Management Division; telephone 206–217–6323, e-mail *SectorPugetSoundWWM@uscg.mil.*

Correction

In the temporary final rule FR Doc. 2011–17261, beginning on page 40617 in the **Federal Register** issue of July 11, 2011, make the following corrections:

1. In the **SUMMARY** section, on page 40617, starting at the bottom of the 2nd column, correct the first sentence of the **SUMMARY** to read as follows:

The U.S. Coast Guard is establishing temporary security zones around the HMCS WHITEHORSE (NCSM 705), HMCS NANAIMO (NCSM 702), CCGS SIYAY, and the USCGC ALERT (WMEC 630) which include all waters within 500 yards from the vessels while each vessel is participating in the Seafair Fleet Week Parade of Ships and while moored following the parade until departing on August 8, 2011.

2. In the **SUPPLEMENTARY INFORMATION** section, under the heading of ''Discussion of Rule,'' in the first column on page 40618, correct the first sentence to read as follows:

The temporary security zones established by this rule will prohibit any person or vessel from entering or remaining within 500 yards of the HMCS WHITEHORSE (NCSM 705), HMCS NANAIMO (NCSM 702), CCGS SIYAY, and the USCGC ALERT (WMEC 630) while these vessels are participating in the Parade of Ships and while moored at Pier 66, Terminal 25, and Terminal 46.

3. In the regulatory text, starting in the second column on page 40619, correct § 165.T13–186 (a) to read as follows:

Location: The following areas are security zones: All waters within the Captain of the Port Puget Sound Zone encompassed within 500 yards of the HMCS WHITEHORSE (NCSM 705), HMCS NANAIMO (NCSM 702), CCGS SIYAY, and the USCGC ALERT (WMEC 630) while each vessel is participating in the Seafair Fleet Week Parade of Ships and while moored at Pier 66, Terminal 25, and Terminal 46, Elliott Bay, Seattle, WA.

Dated: July 27, 2011.

S.J. Ferguson,

Captain, U.S. Coast Guard, Captain of the Port, Puget Sound.

[FR Doc. 2011–19995 Filed 8–5–11; 8:45 am]

BILLING CODE 9110–04–P

ENVIRONMENTAL PROTECTION AGENCY

40 CFR Parts 9 and 721

[EPA–HQ–OPPT–2009–0922; FRL–8878–2]

RIN 2070–AB27

Cobalt Lithium Manganese Nickel Oxide; Significant New Use Rule

AGENCY: Environmental Protection Agency (EPA).

ACTION: Final rule.

SUMMARY: EPA is issuing a significant new use rule (SNUR) under section 5(a)(2) of the Toxic Substances Control Act (TSCA) for the chemical substance identified as cobalt lithium manganese nickel oxide (CAS No. 182442–95–1), which was the subject of premanufacture notice (PMN) P–04–269. This action requires persons who intend to manufacture, import, or process the chemical substance for a use that is designated as a significant new use by this final rule to notify EPA at least 90 days before commencing that activity. EPA believes that this action is necessary because the chemical substance may be hazardous to human health and the environment. The required notification would provide EPA with the opportunity to evaluate the intended use and, if necessary, to prohibit or limit that activity before it occurs.

DATES: This final rule is effective September 7, 2011.

ADDRESSES: EPA has established a docket for this action under docket identification (ID) number EPA–HQ–OPPT–2009–0922. All documents in the docket are listed in the docket index available at *http://www.regulations.gov.* Although listed in the index, some information is not publicly available, *e.g.,* Confidential Business Information (CBI) or other information whose disclosure is restricted by statute. Certain other material, such as copyrighted material, is not placed on the Internet and will be publicly available only in hard copy form. Publicly available docket materials are available in the electronic docket at *http://www.regulations.gov,* or, if only available in hard copy, at the OPPT Docket. The OPPT Docket is located in the EPA Docket Center (EPA/DC) at Rm. 3334, EPA West Bldg., 1301 Constitution Ave., NW., Washington, DC. The EPA/DC Public Reading Room hours of operation are 8:30 a.m. to 4:30 p.m., Monday through Friday, excluding legal holidays. The telephone number of the EPA/DC Public Reading Room is (202) 566–1744, and the telephone number for the OPPT Docket is (202) 566–0280. Docket visitors are required to show photographic identification, pass through a metal detector, and sign the EPA visitor log. All visitor bags are processed through an X-ray machine and subject to search. Visitors will be provided an EPA/DC badge that must be visible at all times in the building and returned upon departure.

FOR FURTHER INFORMATION CONTACT: *For technical information contact:* Kenneth Moss, Chemical Control Division (7405M), Office of Pollution Prevention and Toxics, Environmental Protection Agency, 1200 Pennsylvania Ave., NW., Washington, DC 20460–0001; telephone number: (202) 564–9232; e-mail address: *moss.kenneth@epa.gov.*

For general information contact: The TSCA–Hotline, ABVI–Goodwill, 422 South Clinton Ave., Rochester, NY 14620; telephone number: (202) 554–1404; e-mail address: *TSCA-Hotline@epa.gov.*

SUPPLEMENTARY INFORMATION:

I. Does this action apply to me?

You may be potentially affected by this action if you manufacture, import, process, or use the chemical substance

which is the subject of this final rule. Potentially affected entities may include, but are not limited to:

• Manufacturers, importers, or processors of the subject chemical substance (NAICS codes 325 and 324110), *e.g.,* chemical manufacturing and petroleum refineries.

This listing is not intended to be exhaustive, but rather provides a guide for readers regarding entities likely to be affected by this action. Other types of entities not listed in this unit could also be affected. The North American Industrial Classification System (NAICS) codes have been provided to assist you and others in determining whether this action might apply to certain entities. To determine whether you or your business may be affected by this action, you should carefully examine the applicability provisions in § 721.5. If you have any questions regarding the applicability of this action to a particular entity, consult the technical person listed under **FOR FURTHER INFORMATION CONTACT**.

This action may also affect certain entities through pre-existing import certification and export notification rules under TSCA. Chemical importers are subject to the TSCA section 13 (15 U.S.C. 2612) import certification requirements promulgated at 19 CFR 12.118 through 12.127; see also 19 CFR 127.28. Chemical importers must certify that the shipment of the chemical substance complies with all applicable rules and orders under TSCA. For importers of the chemical substance subject to this SNUR, those requirements include the SNUR. The EPA policy in support of import certification appears at 40 CFR part 707, subpart B. In addition, any persons who export or intend to export the chemical substance that is the subject of this final rule are subject to the export notification provisions of TSCA section 12(b) (15 U.S.C. 2611(b)) (see § 721.20), and must comply with the export notification requirements in 40 CFR part 707, subpart D.

II. Background

A. What action is the agency taking?

EPA is finalizing a SNUR under TSCA section 5(a)(2) (15 U.S.C. 2604(a)(2)) for the chemical substance identified as cobalt lithium manganese nickel oxide (PMN P–04–269; CAS No. 182442–95–1). This action requires persons who intend to manufacture, import, or process the subject chemical substance for an activity that is designated as a significant new use by this final rule to notify EPA at least 90 days before commencing that activity.

In the **Federal Register** issue of September 20, 2010 (75 FR 57169) (FRL–8839–7), EPA issued a direct final SNUR on the chemical substance. However, EPA received notices of intent to submit adverse comments on this SNUR. Therefore, as required by § 721.160(c)(3)(ii), in the **Federal Register** issue of November 18, 2010 (75 FR 70583) (FRL–8853–2), EPA withdrew the direct final SNUR on the chemical substance and simultaneously proposed a SNUR using notice and comment procedures (75 FR 70665) (FRL–8853–3). More information on the specific chemical substance subject to this final rule can be found in the direct final and proposed SNUR. The docket for this action, as well as the preceding direct final and proposed SNUR on this chemical substance, is found under docket ID number EPA–HQ–OPPT–2009–0922. That docket includes information considered by the Agency in developing this final rule, including public comments on the proposed and direct final rules.

EPA received several comments on the proposed rule. A full discussion of EPA's response to these comments is included in Unit V. of this document. Taking into consideration these comments, EPA is issuing a final rule on this chemical substance that:

1. Retains the proposed workplace protection, hazard communication, and release to water provisions as significant new uses.

2. Retains the proposed recommended human health and environmental effects testing.

3. Provides clarification on the exemptions from applicability of the SNUR. This exemption applies to quantities of the PMN substance after it has been completely reacted (cured).

B. What is the agency's authority for taking this action?

Section 5(a)(2) of TSCA (15 U.S.C. 2604(a)(2)) authorizes EPA to determine that a use of a chemical substance is a ''significant new use.'' EPA must make this determination by rule after considering all relevant factors, including those listed in TSCA section 5(a)(2). Once EPA determines that a use of a chemical substance is a significant new use, TSCA section 5(a)(1)(B) requires persons to submit a significant new use notice (SNUN) to EPA at least 90 days before they manufacture, import, or process the chemical substance for that use. Persons who must report are described in § 721.5.

C. Applicability of General Provisions

General provisions for SNURs appear in 40 CFR part 721, subpart A. These provisions describe persons subject to the rule, recordkeeping requirements, exemptions to reporting requirements, and applicability of the rule to uses occurring before the effective date of the final rule. Provisions relating to user fees appear at 40 CFR part 700. According to § 721.1(c), persons subject to these SNURs must comply with the same notice requirements and EPA regulatory procedures as submitters of PMNs under TSCA section 5(a)(1)(A). In particular, these requirements include the information submission requirements of TSCA section 5(b) and 5(d)(1), the exemptions authorized by TSCA section 5(h)(1), (h)(2), (h)(3), and (h)(5), and the regulations at 40 CFR part 720. Once EPA receives a SNUN, EPA may take regulatory action under TSCA section 5(e), 5(f), 6, or 7 to control the activities for which it has received the SNUN. If EPA does not take action, EPA is required under TSCA section 5(g) to explain in the **Federal Register** its reasons for not taking action.

Chemical importers are subject to the TSCA section 13 (15 U.S.C. 2612) import certification requirements promulgated at 19 CFR 12.118 through 12.127; see also 19 CFR 127.28. Chemical importers must certify that the shipment of the chemical substance complies with all applicable rules and orders under TSCA. For importers of a chemical substance subject to a final SNUR those requirements include the SNUR. The EPA policy in support of import certification appears at 40 CFR part 707, subpart B. In addition, any persons who export or intend to export a chemical substance identified in a final SNUR are subject to the export notification provisions of TSCA section 12(b) (15 U.S.C. 2611 (b)) (see § 721.20) and must comply with the export notification requirements in 40 CFR part 707, subpart D.

III. Rationale and Objectives of the Rule

A. Rationale

During review of the chemical substance the subject of PMN P–04–269, EPA concluded that regulation was warranted under TSCA sections 5(e)(1)(A)(i) and 5(e)(1)(A)(ii)(I), pending the development of information sufficient to make reasoned evaluations of the human health and environmental effects of the chemical substance. Based on these findings, a TSCA section 5(e) consent order requiring the use of appropriate exposure controls was negotiated with the PMN submitter. The SNUR provisions for this chemical substance are consistent with the provisions of the TSCA section 5(e) consent order. This final SNUR is issued

pursuant to § 721.160. For additional discussion on the rationale for this action, see Units II. and V. of this document.

B. Objectives

EPA is issuing this final SNUR for a specific chemical substance that has undergone premanufacture review because the Agency wants to achieve the following objectives with regard to the significant new uses designated in this final rule:

- EPA will receive notice of any person's intent to manufacture, import, or process a listed chemical substance for the described significant new use before that activity begins.
- EPA will have an opportunity to review and evaluate data submitted in a SNUN before the notice submitter begins manufacturing, importing, or processing a listed chemical substance for the described significant new use.
- EPA will be able to regulate prospective manufacture, import, or processing of the chemical substance before the described significant new use of that chemical substance occurs, provided that regulation is warranted pursuant to TSCA sections 5(e), 5(f), 6, or 7.
- EPA will ensure that all manufacturers, importers, and processors of the same chemical substance that is subject to a TSCA section 5(e) consent order are subject to similar requirements.

Issuance of a SNUR for a chemical substance does not signify that the chemical substance is listed on the TSCA Inventory. Guidance on how to determine if a chemical substance is on the TSCA Inventory is available on-line at *http://www.epa.gov/opptintr/existingchemicals/pubs/tscainventory/index.html.*

IV. Significant New Use Determination

Section 5(a)(2) of TSCA states that EPA's determination that a use of a chemical substance is a significant new use must be made after consideration of all relevant factors, including:

- The projected volume of manufacturing and processing of a chemical substance.
- The extent to which a use changes the type or form of exposure of human beings or the environment to a chemical substance.
- The extent to which a use increases the magnitude and duration of exposure of human beings or the environment to a chemical substance.
- The reasonably anticipated manner and methods of manufacturing, processing, distribution in commerce, and disposal of a chemical substance.

In addition to these factors enumerated in TSCA section 5(a)(2), the statute authorizes EPA to consider any other relevant factors.

To determine what would constitute a significant new use for the chemical substance subject to this final SNUR, EPA considered relevant information about the toxicity of the chemical substance, likely human exposures and environmental releases associated with possible uses, taking into consideration the four bulleted TSCA section 5(a)(2) factors listed in this unit.

V. Response to Comments on Proposed SNUR on Cobalt Lithium Manganese Nickel Oxide

EPA received several public comments on the proposed rule. Of these comments, two commenters were supportive of EPA's findings and agreed with the issuance of this regulation. A discussion of the remaining substantive comments received and the Agency's responses follows.

Comment 1: One commenter examined the solubility and release of cobalt and nickel ions in water to confirm the commenter's assumption that the PMN substance can be best described as an alloy, without the potential to release the individual ions. The commenter believes that the substance should therefore behave in the respiratory tract as an ''inert'' dust, and recommended a time weighted average (TWA) of 1 mg/m^3 in accordance with ''similar compounds,'' rather than the Occupational Safety and Health Administration (OSHA) Permissible Exposure Level (PEL) of 0.1 mg/m^3 for nickel. The commenter included solubility data with the submission for Agency review.

Response: An alloy is a mixture of elemental metals. In contrast, based on submitted weight-fraction data, the PMN substance is characterized as a mixed-metal oxide, in which all of the metal species are oxidized (none exist in an elemental state) and accordingly would have the potential to dissociate into free metal ions upon release. Therefore, the Agency does not believe a change to the proposed New Chemicals Exposure Limit (NCEL) of 0.1 mg/m^3 is supportable at this time. In addition, solubility data submitted by the commenter supports the Agency's predictions that the metals would be soluble well above the 1 part per billion (ppb) aquatic toxicity concentration of concern (COC) for the PMN substance in surface waters. As a result, EPA will retain the recommended human health and aquatic toxicity studies listed in the proposed rule.

Comment 2: One commenter submitted a number of studies that were completed for a new chemical notification for cobalt lithium manganese nickel oxide for Belgium. Those studies included: An acute oral toxicity (Organisation for Economic Co-operation and Development (OECD) Test Guideline 420) in rats; an acute dermal toxicity (OECD Test Guideline 402) in rats; an acute dermal irritation (OECD Test Guideline 404) in rabbits; an acute eye irritation (OECD Test Guideline 405) in rabbits; a local lymph node assay (OECD Test Guideline 429) in mice; a 28-day repeated does oral (gavage) toxicity (OECD Test Guideline 407) in rats; a reverse mutation assay Ames Test (OECD Test Guideline 471) using *Salmonella typhimurium* and *Escherichia coli;* an *in vitro* chromosome aberration test (OECD Test Guideline 473) on human lymphocytes; and physical/chemical properties data for: melting/freezing temperature (American Society for Testing and Materials (ASTM) E537–86, Method A1 of European Commission (EC) Directive 92/69/EEC); relative density (gas comparison pycnometer); water solubility (flask method); particle size distribution (OECD Test Guideline 110); flammability (EC Method A10); explosive properties (EC Method A14); oxidizing properties (EC Method A16); and relative self-ignition temperature for solids (EC Method A10)). The submitter stated that it believed information contained in the studies may be of use to the EPA in preparation of a final rule.

Response: Summaries of the results of the aforementioned submitted data are included in the public docket at EPA–HQ–OPPT–2009–0922–0150. While the submitted information was informative, it did not change EPA's human health and environmental concerns for the chemical, for the reasons described as follows:

a. *Human health effects.* EPA's primary human health concern for the PMN substance is lung carcinogenesis from respirable crystalline material. EPA determined that the acute oral and 28-day oral gavage studies had little bearing on those concerns. The physical-chemical data confirmed that the PMN substance is in the respirable range. The dermal and eye irritation studies indicate that the PMN substance is of low dermal toxicity, is not a skin irritant, does not pose a skin sensitization hazard, and is a minimal eye irritant (class 3 on a scale of 1 to 8). The substance is not a gene mutagen or a chromosome mutagen in human cells.

b. *Environmental effects.* The submitted acute and chronic aquatic toxicity assessment was consistent with

the EPA toxicity profiles for the metals, from which the Agency derived the aquatic toxicity concern concentration of 1 ppb.

Comment 3: One commenter believed that the release-to-water provision in the proposed SNUR, for requirements at § 721.90 (a)(1), (b)(1), and (c)(1), is an unreasonable and overbroad restriction that would lead to domestic manufacturers being subject to manufacturing limitations not applicable to their off-shore competitors. The comment stated that discharges of cobalt, lithium, manganese, and nickel oxide can be expected to be adequately regulated under a facility's pre-treatment or direct discharge permit issued under the Clean Water Act (CWA), which is specifically intended to regulate such discharges and ensure that effluent does not compromise aquatic organisms. Additionally, the comment stated that the PMN substance represents a battery technology that offers significant environmental benefits, based on the capability of storing much larger amounts of electricity, which will diminish the use of fossil fuels and power more sustainable and energy-efficient automobiles and other electronics. The comment requested that the release-to-water provision should either be eliminated altogether or revised to provide for no-release-to-water without valid authorization under the CWA, or similar language that would allow dischargers operating under valid pre-treatment or direct discharge permits to continue to operate as allowed under the terms of those CWA-issued permits.

Response: Through the National Pollutant Discharge Elimination System (NPDES) Permit Program and the National Pretreatment Program, a component of the NPDES Permit Program, Federal, State, and local governments control water pollution by regulating point sources that discharge pollutants into waters of the United States. However, for the regulation of toxic pollutants, the NPDES Permit Program focuses on the CWA section 307(a)(1) list of priority pollutants (which do not include cobalt, lithium, or manganese). When a pollutant discharged by a direct or indirect discharging industry is not specifically limited in an effluent guideline or by pretreatment standards, respectively, it is up to the permit writer or state/local agency to utilize best professional judgment to establish technology-based limits or determine other appropriate means to control its discharge. Permit writers may not be aware of the discharge of certain toxic chemical substances by a specific facility, such as chemical substances that have been assessed under the TSCA New Chemicals Program and which may be discharged by manufacturers, processors, and users of the chemical substance. Therefore, EPA generally includes disposal provisions in new chemical SNURs when it determines that disposal of the substance may not be adequately addressed by existing rules under other statutes. However, the SNUR regulations in § 721.30 provide the opportunity for persons who intend to manufacture, import, or process a chemical substance subject to a SNUR to request a ''determination of equivalency'' from EPA. In such a request, the person must demonstrate that their intended activities will provide substantially the same degree of protection to health and the environment as the measures identified in the SNUR to control environmental release. Similarly, a person who intends to manufacture, import, or process a chemical substance subject to a SNUR can submit a SNUN that provides such ''equivalency'' information (e.g., specific NPDES or pretreatment limits for a specific facility or industry that will control the pollutants of concern).

VI. Applicability of Rule to Uses Occurring Before Effective Date of the Final Rule

As discussed in the **Federal Register** of April 24, 1990 (55 FR 17376), EPA has decided that the intent of TSCA section 5(a)(1)(B) is best served by designating a use as a significant new use as of the date of publication of the proposed SNUR rather than as of the effective date of the final rule. If uses begun after publication were considered ongoing rather than new, it would be difficult for EPA to establish SNUR notice requirements because a person could defeat the SNUR by initiating the proposed significant new use before the rule became effective, and then argue that the use was ongoing before the effective date of the final rule.

Any person who began commercial manufacture, import, or processing of the chemical substance PMN P–04–269 for any of the significant new uses designated in the proposed SNUR after the date of publication of the proposed SNUR must stop that activity before the effective date of this final rule. Persons who ceased those activities will have to meet all SNUR notice requirements and wait until the end of the notification review period, including all extensions, before engaging in any activities designated as significant new uses. If, however, persons who began manufacture, import, or processing of the chemical substance between the date of publication of the proposed SNUR and the effective date of this final SNUR meet the conditions of advance compliance as codified at § 721.45(h), those persons would be considered to have met the final SNUR requirements for those activities.

VII. Test Data and Other Information

EPA recognizes that TSCA section 5 does not require the development of any particular test data before submission of a SNUN. There are two exceptions:

1. Development of test data is required where the chemical substance subject to the SNUR is also subject to a test rule under TSCA section 4 (see TSCA section 5(b)(1)).

2. Development of test data may be necessary where the chemical substance has been listed under TSCA section 5(b)(4) (see TSCA section 5(b)(2)).

In the absence of a TSCA section 4 test rule or a TSCA section 5(b)(4) listing covering the chemical substance, persons are required only to submit test data in their possession or control and to describe any other data known to or reasonably ascertainable by them (see § 720.50). However, upon review of PMNs and SNUNs, the Agency has the authority to require appropriate testing. In this case, EPA recommends persons, before performing any testing, to consult with the Agency pertaining to protocol selection.

In the TSCA section 5(e) consent order for the chemical substance regulated under this final rule, EPA has established requirements for the use of dermal personal protective equipment, including gloves demonstrated to be impervious; use of respiratory personal protective equipment, including a National Institute of Occupational Safety and Health (NIOSH)-approved respirator with an assigned protection factor (APF) of at least 150, or compliance with an alternative NCEL of 0.1 mg/m^3 as an 8-hour time weighted average; establishment of a hazard communication program, and prohibits releases-to-water in view of the lack of data on the potential health and environmental risks that may be posed by the significant new uses or increased exposure to the chemical substance. These requirements will remain until such time as the PMN submitter provides the results of toxicity tests that would permit a reasoned evaluation of the potential risks posed by the chemical substance. A listing of the specific human health and environmental toxicity tests specified in the TSCA section 5(e) consent order is included in Unit IV. of the proposed rule. The SNUR contains notification

requirements that mirror the restrictions in the TSCA section 5(e) consent order. Significant new uses under this SNUR are activities restricted in the TSCA section 5(e) consent order. Persons who intend to commence any of these activities identified as a significant new use must notify the Agency by submitting a SNUN at least 90 days in advance of commencement of non-exempt commercial manufacture, import, or processing.

The recommended testing specified in Unit IV. of the proposed rule may not be the only means of addressing the potential risks of the chemical substance. However, SNUNs submitted without any test data may increase the likelihood that EPA will respond by taking action under TSCA section 5(e), particularly if satisfactory test results have not been obtained from a prior PMN or SNUN submitter. EPA recommends that potential SNUN submitters contact EPA early enough so that they will be able to conduct the appropriate tests prior to submitting a SNUN.

SNUN submitters should be aware that EPA will be better able to evaluate SNUNs which provide detailed information on the following:

- Human exposure and environmental release that may result from the significant new use of the chemical substance.
- Potential benefits of the chemical substance.
- Information on risks posed by the chemical substance compared to risks posed by potential substitutes.

VIII. SNUN Submissions

According to § 721.1(c), persons submitting a SNUN must comply with the same notice requirements and EPA regulatory procedures as persons submitting a PMN, including submission of test data on health and environmental effects as described in § 720.50. SNUNs must be on EPA Form No. 7710–25, generated using e-PMN software, and submitted to the Agency in accordance with the procedures set forth in §§ 721.25 and 720.40. E–PMN software is available electronically at *http://www.epa.gov/opptintr/newchems.*

IX. Economic Analysis

EPA evaluated the potential costs of establishing SNUN requirements for potential manufacturers, importers, and processors of the chemical substance during the development of the direct final rule. The Agency's complete economic analysis is available in the docket under docket ID number EPA–HQ–OPPT–2009–0922.

X. Statutory and Executive Order Reviews

A. Executive Order 12866

This final rule establishes a SNUR for a chemical substance that was the subject of a PMN and a TSCA section 5(e) consent order. The Office of Management and Budget (OMB) has exempted these types of actions from review under Executive Order 12866, entitled *Regulatory Planning and Review* (58 FR 51735, October 4, 1993).

B. Paperwork Reduction Act

According to the Paperwork Reduction Act (PRA), 44 U.S.C. 3501 *et seq.,* an Agency may not conduct or sponsor, and a person is not required to respond to a collection of information that requires OMB approval under PRA, unless it has been approved by OMB and displays a currently valid OMB control number. The OMB control numbers for EPA's regulations in title 40 of the CFR, after appearing in the **Federal Register**, are listed in 40 CFR part 9, and included on the related collection instrument or form, if applicable. EPA is amending the table in 40 CFR part 9 to list the OMB approval number for the information collection requirements contained in this final rule. This listing of the OMB control numbers and their subsequent codification in the CFR satisfies the display requirements of PRA and OMB's implementing regulations at 5 CFR part 1320. This Information Collection Request (ICR) was previously subject to public notice and comment prior to OMB approval, and given the technical nature of the table, EPA finds that further notice and comment to amend it is unnecessary. As a result, EPA finds that there is ''good cause'' under section 553(b)(3)(B) of the Administrative Procedure Act, 5 U.S.C. 553(b)(3)(B), to amend this table without further notice and comment.

The information collection requirements related to this action have already been approved by OMB pursuant to PRA under OMB control number 2070–0012 (EPA ICR No. 574). This action does not impose any burden requiring additional OMB approval. If an entity were to submit a SNUN to the Agency, the annual burden is estimated to average between 30 and 170 hours per response. This burden estimate includes the time needed to review instructions, search existing data sources, gather and maintain the data needed, and complete, review, and submit the required SNUN.

Send any comments about the accuracy of the burden estimate, and any suggested methods for minimizing respondent burden, including through the use of automated collection techniques, to the Director, Collection Strategies Division, Office of Environmental Information (2822T), Environmental Protection Agency, 1200 Pennsylvania Ave., NW., Washington, DC 20460–0001. Please remember to include the OMB control number in any correspondence, but do not submit any completed forms to this address.

C. Regulatory Flexibility Act

Pursuant to section 605(b) of the Regulatory Flexibility Act (RFA) (5 U.S.C. 601 *et seq.*), the Agency hereby certifies that promulgation of this SNUR will not have a significant adverse economic impact on a substantial number of small entities. The requirement to submit a SNUN applies to any person (including small or large entities) who intends to engage in any activity described in the final rule as a ''significant new use.'' Because these uses are ''new,'' based on all information currently available to EPA, it appears that no small or large entities presently engage in such activities. A SNUR requires that any person who intends to engage in such activity in the future must first notify EPA by submitting a SNUN. Although some small entities may decide to pursue a significant new use in the future, EPA cannot presently determine how many, if any, there may be. However, EPA's experience to date is that, in response to the promulgation of SNURs covering over 1,000 chemicals, the Agency receives only a handful of notices per year. For example, the number of SNUNs was four in Federal fiscal year (FY) 2005, eight in FY 2006, six in FY 2007, eight in FY 2008, and seven in FY 2009. During this five-year period, three small entities submitted a SNUN. In addition, the estimated reporting cost for submission of a SNUN (see Unit IX.) is minimal regardless of the size of the firm. Therefore, the potential economic impacts of complying with this SNUR are not expected to be significant or adversely impact a substantial number of small entities. In a SNUR that published in the **Federal Register** of June 2, 1997 (62 FR 29684) (FRL–5597–1), the Agency presented its general determination that final SNURs are not expected to have a significant economic impact on a substantial number of small entities, which was provided to the Chief Counsel for Advocacy of the Small Business Administration.

D. Unfunded Mandates Reform Act

Based on EPA's experience with proposing and finalizing SNURs, State, local, and Tribal governments have not

been impacted by these rulemakings, and EPA does not have any reasons to believe that any State, local, or Tribal government will be impacted by this final rule. As such, EPA has determined that this final rule does not impose any enforceable duty, contain any unfunded mandate, or otherwise have any effect on small governments subject to the requirements of sections 202, 203, 204, or 205 of the Unfunded Mandates Reform Act of 1995 (UMRA) (Pub. L. 104–4).

E. Executive Order 13132

This action will not have a substantial direct effect on States, on the relationship between the national government and the States, or on the distribution of power and responsibilities among the various levels of government, as specified in Executive Order 13132, entitled *Federalism* (64 FR 43255, August 10, 1999).

F. Executive Order 13175

This final rule does not have Tribal implications because it is not expected to have substantial direct effects on Indian Tribes. This final rule does not significantly nor uniquely affect the communities of Indian Tribal governments, nor does it involve or impose any requirements that affect Indian Tribes. Accordingly, the requirements of Executive Order 13175, entitled *Consultation and Coordination with Indian Tribal Governments* (65 FR 67249, November 9, 2000), do not apply to this final rule.

G. Executive Order 13045

This action is not subject to Executive Order 13045, entitled *Protection of Children from Environmental Health Risks and Safety Risks* (62 FR 19885, April 23, 1997), because this is not an economically significant regulatory action as defined by Executive Order 12866, and this action does not address environmental health or safety risks disproportionately affecting children.

H. Executive Order 13211

This action is not subject to Executive Order 13211, entitled *Actions Concerning Regulations That Significantly Affect Energy Supply, Distribution, or Use* (66 FR 28355, May 22, 2001), because this action is not expected to affect energy supply, distribution, or use and because this action is not a significant regulatory action under Executive Order 12866.

I. National Technology Transfer and Advancement Act

In addition, since this action does not involve any technical standards, section 12(d) of the National Technology Transfer and Advancement Act of 1995 (NTTAA), Public Law 104–113, section 12(d) (15 U.S.C. 272 note), does not apply to this action.

J. Executive Order 12898

This action does not entail special considerations of environmental justice related issues as delineated by Executive Order 12898, entitled *Federal Actions to Address Environmental Justice in Minority Populations and Low-Income Populations* (59 FR 7629, February 16, 1994).

XI. Congressional Review Act

The Congressional Review Act, 5 U.S.C. 801 *et seq.,* generally provides that before a rule may take effect, the agency promulgating the rule must submit a rule report to each House of the Congress and the Comptroller General of the United States. EPA will submit a report containing this rule and other required information to the U.S. Senate, the U.S. House of Representatives, and the Comptroller General of the United States prior to publication of the rule in the **Federal Register**. This rule is not a ''major rule'' as defined by 5 U.S.C. 804(2).

List of Subjects

40 CFR Part 9

Environmental protection, Reporting and recordkeeping requirements.

40 CFR Part 721

Environmental protection, Chemicals, Hazardous substances, Reporting and recordkeeping requirements.

Dated: August 1, 2011.

Barbara A. Cunningham,

Acting Director, Office of Pollution Prevention and Toxics.

Therefore, 40 CFR parts 9 and 721 are amended as follows:

PART 9—[AMENDED]

■ 1. The authority citation for part 9 continues to read as follows:

Authority: 7 U.S.C. 135 *et seq.,* 136–136y; 15 U.S.C. 2001, 2003, 2005, 2006, 2601–2671; 21 U.S.C. 331j, 346a, 348; 31 U.S.C. 9701; 33 U.S.C. 1251 *et seq.,* 1311, 1313d, 1314, 1318, 1321, 1326, 1330, 1342, 1344, 1345 (d) and (e), 1361; E.O. 11735, 38 FR 21243, 3 CFR, 1971–1975 Comp. p. 973; 42 U.S.C. 241, 242b, 243, 246, 300f, 300g, 300g–1, 300g–2, 300g–3, 300g–4, 300g–5, 300g–6, 300j–1, 300j–2, 300j–3, 300j–4, 300j–9, 1857 *et seq.,* 6901–6992k, 7401–7671q, 7542, 9601–9657, 11023, 11048.

■ 2. The table in § 9.1 is amended by adding the following section in numerical order under the undesignated center heading ''Significant New Uses of Chemical Substances'' to read as follows:

§ 9.1 OMB approvals under the Paperwork Reduction Act.

* * * * *

40 CFR citation	OMB control No.
* * * * *	
Significant New Uses of Chemical Substances	
* * * * *	
721.10201	2070–0012
* * * * *	

* * * * *

PART 721—[AMENDED]

■ 3. The authority citation for part 721 continues to read as follows:

Authority: 15 U.S.C. 2604, 2607, and 2625(c).

■ 4. Add § 721.10201 to subpart E to read as follows:

§ 721.10201 Cobalt lithium manganese nickel oxide.

(a) *Chemical substance and significant new uses subject to reporting.* (1) The chemical substance identified as cobalt lithium manganese nickel oxide (PMN P–04–269; CAS No. 182442–95–1) is subject to reporting under this section for the significant new uses described in paragraph (a)(2) of this section. The requirements of this section do not apply to quantities of the PMN substance after it has been completely reacted (cured).

(2) The significant new uses are:

(i) *Protection in the workplace.* Requirements as specified in § 721.63 (a)(1), (a)(2)(i), (a)(3), (a)(4), (a)(5), (a)(6), (b) (concentration set at 0.1 percent), and (c). Respirators must provide a National Institute for Occupational Safety and Health (NIOSH) assigned protection factor (APF) of at least 150. The following NIOSH-certified respirators meet the requirements of § 721.63(a)(4): Supplied-air respirator operated in positive pressure demand or other positive pressure mode and equipped with a tight-fitting full facepiece. As an alternative to the respirator requirements listed here, a manufacturer, importer, or processor may choose to follow the New Chemical Exposure Limit (NCEL) provisions listed in the Toxic Substances Control Act

(TSCA) section 5(e) consent order for this substance. The NCEL is 0.1 mg/m^3 as an 8-hour time-weighted average. Persons who wish to pursue NCELs as an alternative to the § 721.63 respirator may request to do as under § 721.30. Persons whose § 721.30 requests to use the NCELs approach are approved by EPA will receive NCELs provisions comparable to those listed in the corresponding section 5(e) consent order.

(ii) *Hazard communication program.* Requirements as specified in § 721.72 (a), (b), (c), (d), (e) (concentration set at 0.1 percent), (f), (g)(1)(i), (g)(1)(ii), (g)(1)(vii), (g)(1)(ix), (g)(2), (g)(3), (g)(4)(iii), and (g)(5).

(iii) *Release to water.* Requirements as specified in § 721.90(a)(1), (b)(1), and (c)(1).

(b) *Specific requirements.* The provisions of subpart A of this part apply to this section except as modified by this paragraph.

(1) *Recordkeeping.* Recordkeeping requirements as specified in § 721.125 (a), (b), (c), (d), (e), (f), (g), (h), and (k) are applicable to manufacturers, importers, and processors of this chemical substance.

(2) *Limitations or revocation of certain notification requirements.* The provisions of § 721.185 apply to this section.

[FR Doc. 2011–20021 Filed 8–5–11; 8:45 am]

BILLING CODE 6560–50–P

ENVIRONMENTAL PROTECTION AGENCY

40 CFR Part 52

[EPA–R09–OAR–2011–0211; FRL–9446–6]

Approval and Promulgation of Air Quality Implementation Plans; State of California; Interstate Transport of Pollution; Interference With Prevention of Significant Deterioration Requirement

AGENCY: Environmental Protection Agency (EPA).

ACTION: Final rule.

SUMMARY: EPA is finalizing a limited approval and limited disapproval of a state implementation plan (SIP) revision submitted by the State of California on November 17, 2007, to address the ''transport SIP'' provisions of Clean Air Act (CAA) section 110(a)(2)(D)(i) for the 1997 8-hour ozone National Ambient Air Quality Standards (NAAQS or standards) and the 1997 fine particulate matter ($PM_{2.5}$) NAAQS. Section 110(a)(2)(D)(i) of the CAA requires that each SIP contain, among other things, adequate measures prohibiting emissions of air pollutants in amounts which will interfere with any other State's measures required under title I, part C of the CAA to prevent significant deterioration of air quality. EPA is approving California's SIP revision with respect to those Districts that implement SIP-approved permit programs meeting the approval criteria and simultaneously disapproving California's SIP revision with respect to those Districts that do not implement SIP-approved permit programs meeting the approval criteria, as discussed in our May 31, 2011 proposed rule (76 FR 31263).

DATES: This final rule is effective September 7, 2011.

ADDRESSES: EPA has established a docket for this action under EPA–R09–OAR–2011–0211. The index to the docket for this action is available electronically at *http://www.regulations.gov* and in hard copy at EPA Region IX, 75 Hawthorne Street, San Francisco, California. While all documents in the docket are listed in the index, some information may be publicly available only at the hard copy location (e.g., copyrighted material) and some may not be available in either location (e.g., confidential business information (CBI)). To inspect the hard copy materials, please schedule an appointment during normal business hours with the contact listed in the **FOR FURTHER INFORMATION CONTACT** section. Although listed in the index, some information is not publicly available, i.e., CBI or other information the disclosure of which is restricted by statute. Certain other material, such as copyrighted material, is not placed on the Internet and will be publicly available only in hard copy form.

FOR FURTHER INFORMATION CONTACT: Rory Mays, Air Planning Office (AIR–2), U.S. Environmental Protection Agency, Region IX, (415) 972–3227, *mays.rory@epa.gov*.

SUPPLEMENTARY INFORMATION: Throughout this document, the terms ''we'', ''us'', and ''our'' refer to EPA.

I. Summary of the Proposed Actions

On May 31, 2011 (76 FR 31263), EPA proposed a limited approval and limited disapproval of a SIP revision submitted by the California Air Resources Board (CARB) on November 17, 2007, to address the ''transport SIP'' provisions of CAA section 110(a)(2)(D)(i) for the 1997 8-hour ozone NAAQS and the 1997 $PM_{2.5}$ NAAQS (2007 Transport SIP). Specifically, EPA proposed a limited approval and limited disapproval of the 2007 Transport SIP with respect to the requirement in CAA section 110(a)(2)(D)(i)(II) that each SIP contain adequate measures prohibiting emissions of air pollutants in amounts which will interfere with any other State's measures required under title I, part C of the CAA to prevent significant deterioration of air quality. We refer to this requirement as ''element (3)'' of section 110(a)(2)(D)(i).

A. Proposed Action With Respect to 1997 8-Hour Ozone NAAQS

We proposed the following actions with respect to element (3) of CAA section 110(a)(2)(D)(i) for the 1997 8-hour ozone NAAQS. For nine Districts [1] that are designated nonattainment and classified under subpart 2 of part D, title I of the CAA and that have SIP-approved nonattainment area new source review (NNSR) programs meeting the approval criteria discussed in our May 31, 2011 proposed rule, we proposed to approve the 2007 Transport SIP.

For three Districts [2] with nonattainment areas classified under subpart 2 for which NNSR SIP revisions were necessary to meet the approval criteria, we proposed to approve the 2007 Transport SIP if we finalized approval of the required NNSR SIP revisions by our July 10, 2011 Consent Decree deadline for final action on element (3) of the 2007 Transport SIP.[3] Alternatively, for any of these Districts for which we could not approve the required NNSR SIP revision by our July 10, 2011 deadline, we proposed to disapprove the 2007 Transport SIP with respect to element (3) of CAA section 110(a)(2)(D)(i) for the 1997 8-hour ozone NAAQS and to promulgate a limited NNSR Federal Implementation Plan (FIP) addressing the relevant requirements.

For two Districts [4] with ''former subpart 1'' nonattainment areas that implement SIP-approved NNSR programs meeting the approval criteria,

---

[1] Antelope Valley Air Quality Management District (AQMD), Bay Area AQMD, El Dorado County Air Pollution Control District (APCD), Imperial County APCD, Mojave Desert AQMD, San Joaquin Valley APCD, South Coast AQMD, Ventura County APCD, and Yolo-Solano AQMD.

[2] Feather River AQMD, Placer County APCD, and Sacramento Metropolitan AQMD.

[3] *See WildEarth Guardians* v. *U.S.* EPA (Case No. 4:09–CV–02453–CW), Consent Decree dated November 10, 2009, as amended by *Notice of Stipulated Extensions to Consent Decree Deadlines,* dated April 28, 2011 (establishing July 10, 2011 deadline for final action on element (3) of the 2007 Transport SIP). The July 10, 2011 deadline was further extended to July 29, 2011 by *Notice of Stipulated Extension to Consent Decree Deadlines,* dated July 7, 2011.

[4] Eastern Kern APCD and San Diego County APCD.

we proposed to approve the 2007 Transport SIP.

For seven Districts [5] with ''former subpart 1'' nonattainment areas that do not yet have SIP-approved NNSR programs, we proposed to disapprove the 2007 Transport SIP but to determine that implementation of the provisions of 40 CFR part 51, Appendix S (''The Interpretative Rule'') [6] during this interim period pending EPA's final subpart 2 classifications of these areas adequately addresses the requirements of element (3) of CAA section 110(a)(2)(D)(i) and, therefore, discharges EPA's obligation to promulgate a FIP for these limited purposes.

For Monterey Bay Unified APCD (''Monterey''), which is designated unclassifiable/attainment and has a SIP-approved Prevention of Significant Deterioration (PSD) program meeting the approval criteria, we proposed to approve the 2007 Transport SIP.

For two Districts [7] with unclassifiable/attainment areas for which we recently approved PSD SIP revisions meeting the approval criteria by direct final rule, we proposed to approve the 2007 Transport SIP. Alternatively, we proposed to disapprove the 2007 Transport SIP if either of these direct final rules were withdrawn and would not become effective by our July 10, 2011 Consent Decree deadline, in which case we would promulgate a limited PSD FIP for the relevant District based on the provisions of 40 CFR 52.21 identifying NO_X as an ozone precursor.

For North Coast Unified AQMD (''North Coast''), we proposed to disapprove the 2007 Transport SIP and to promulgate a limited PSD FIP for NO_X emission sources only, as discussed in our May 31, 2011 proposed rule. By separate action published in today's Federal Register, EPA finalized that limited PSD FIP for North Coast.[8]

For the rest of the State, which is designated unclassifiable/attainment for the 1997 8-hour ozone NAAQS and subject to the Federal PSD program in 40 CFR 52.21, we proposed to disapprove the 2007 Transport SIP but to determine that no further action is required to address element (3) of CAA section 110(a)(2)(D)(i) because EPA has already promulgated a PSD FIP for these areas.

B. Proposed Action With Respect to 1997 $PM_{2.5}$ NAAQS

We proposed the following actions with respect to element (3) of CAA section 110(a)(2)(D)(i) for the 1997 $PM_{2.5}$ NAAQS. For two Districts [9] that are designated nonattainment, we proposed to approve the 2007 Transport SIP based on a determination that implementation of The Interpretative Rule during the SIP-development period adequately addresses the requirements of element (3) of CAA section 110(a)(2)(D)(i).

For five Districts [10] that are designated unclassifiable/attainment and that have SIP-approved PSD programs meeting the approval criteria discussed above, we proposed to approve the 2007 Transport SIP.

For the rest of the State, which is designated unclassifiable/attainment and subject to the Federal PSD program in 40 CFR 52.21, we proposed to disapprove the 2007 Transport SIP but to determine that no further action is required to address element (3) of CAA section 110(a)(2)(D)(i) because EPA has already promulgated a PSD FIP for these areas.

C. Proposed Action With Respect to Greenhouse Gases

Finally, with respect to PSD authority to regulate greenhouse gases (GHGs), we proposed to take the following actions. For three Districts [11] that were subject to the PSD SIP Narrowing Rule (75 FR 82536, December 30, 2010), we proposed to fully approve the 2007 Transport SIP with respect to element (3) of CAA section 110(a)(2)(D)(i) based on letters from each District. These letters clarified that the 2007 Transport SIP should be read, with respect to CAA section 110(a)(2)(D)(i)(II), to reflect each of their PSD programs as they are currently federally approved as a result of the PSD SIP Narrowing Rule.

For Monterey, which has confirmed that its SIP provides GHG PSD permitting authority at thresholds consistent with the Tailoring Rule, we proposed to fully approve the 2007 Transport SIP with respect to element (3) of CAA section 110(a)(2)(D)(i).

For Sacramento Metropolitan AQMD (''Sacramento''), which was subject to the PSD GHG SIP Call (75 FR 77698, December 13, 2010), we proposed to fully approve the 2007 Transport SIP with respect to element (3) of CAA section 110(a)(2)(D)(i) if Sacramento's corrective SIP revision to address GHG permitting requirements received EPA approval.

For all other areas in California, which are subject to the Federal PSD program in 40 CFR 52.21, we proposed to disapprove the 2007 Transport SIP but to determine that no further action is required to address element (3) of CAA section 110(a)(2)(D)(i) because EPA has already promulgated a PSD FIP for these areas.

For a more detailed explanation of our evaluation of the 2007 Transport SIP with respect to element (3) of CAA section 110(a)(2)(D)(i) and of the rationale for our proposed actions, please see our May 31, 2011 proposed rule and related Technical Support Document (76 FR 31263).

II. EPA's Response to Comments

Our May 31, 2011 proposed rule provided for a 30-day comment period. We did not receive any public comments in response to the proposed rule.

III. Final Action

Under sections 110(k)(3) and 301(a) of the CAA, EPA is finalizing a limited approval and limited disapproval of the 2007 Transport SIP submitted by CARB on November 17, 2007. We are finalizing a limited approval and limited disapproval action because the 2007 Transport SIP is not separable with respect to individual California Districts, and because, although the submittal as a whole strengthens the SIP and meets the applicable CAA requirements for certain Districts, it does not meet the applicable requirements for certain other Districts, as discussed in Section I of this final rule and in our May 31, 2011 proposed rule.

Specifically, we are approving the 2007 Transport SIP as meeting the requirements of element (3) of CAA section 110(a)(2)(D)(i) with respect to the following areas:

- Twelve Districts [12] that implement SIP-approved NNSR or PSD programs

[5] Amador County APCD, Butte County AQMD, Calaveras County APCD, Feather River AQMD, Mariposa County APCD, Northern Sierra AQMD, and Tuolumne County APCD.

[6] Note that the waiver provisions in section VI of 40 CFR part 51 Appendix S no longer apply. See Phase 2 Rule, 75 FR 71612 (November 29, 2005) and *NRDC* v. *EPA*, 571 F. 3d 1245 (DC Cir. 2009) (vacating EPA's elimination of the 18-month limitation in 40 CFR part 52.24(k) with respect to the waiver provisions in section VI of 40 CFR part 51 Appendix S).

[7] Mendocino County AQMD and Northern Sonoma County APCD.

[8] *See* fn. 3 above.

[9] San Joaquin Valley APCD and the South Coast Air Basin portion of South Coast AQMD.

[10] Mendocino County AQMD, Monterey Bay Unified APCD, North Coast Unified AQMD, Northern Sonoma County APCD, and Sacramento Metropolitan AQMD.

[11] Mendocino County AQMD, Northern Sonoma County APCD, and North Coast Unified AQMD. Note that footnote 24 of our proposed rule (76 FR 31263 at 31268) incorrectly identifies Monterey Bay Unified APCD instead of Northern Sonoma County APCD as one of the three Districts that were subject to the PSD SIP Narrowing Rule but that our Technical Support Document correctly identifies the relevant Districts.

[12] Antelope Valley AQMD, Bay Area AQMD, El Dorado County APCD, Imperial County APCD,

Continued

meeting the approval criteria for the 1997 8-hour ozone NAAQS;

• Three Districts [13] for which we have recently approved the required NNSR SIP revisions for the 1997 8-hour ozone NAAQS (*see* 76 FR 43183, July 20, 2011 (Final rule, Sacramento Metropolitan AQMD NNSR and PSD SIP revisions); and Final rule, ''Revisions to the California State Implementation Plan, Placer County Air Pollution Control District and Feather River Air Quality Management District,'' signed June 30, 2011);

• Two Districts [14] for which we have recently approved the required PSD SIP revisions for the 1997 8-hour ozone NAAQS (see 76 FR 26192 (May 6, 2011));

• Five Districts [15] that implement SIP-approved PSD programs meeting the approval criteria for the 1997 $PM_{2.5}$ NAAQS;

• Four Districts [16] that implement SIP-approved PSD programs meeting the approval criteria for greenhouse gases (GHGs); and

• One District (Sacramento) for which we have recently approved the required PSD SIP revision for GHGs (*see* 76 FR 43183, July 20, 2011 (Final rule, Sacramento Metropolitan AQMD NNSR and PSD SIP revisions)).

We are simultaneously disapproving the 2007 Transport SIP for failure to meet the requirements of element (3) of CAA section 110(a)(2)(D)(i) with respect to the following areas:

• Seven Districts [17] with ''former subpart 1'' ozone nonattainment areas that do not yet have SIP-approved NNSR programs meeting the approval criteria for the 1997 8-hour ozone NAAQS;

• One District (North Coast) for which EPA has not yet approved a PSD SIP revision meeting the approval criteria for the 1997 8-hour ozone NAAQS; and

• All areas in the State that are subject to the Federal PSD program in 40 CFR 52.21 for the 1997 8-hour ozone NAAQS, the 1997 $PM_{2.5}$ NAAQS, and/or GHGs, where the California SIP remains deficient with respect to PSD requirements.

Under section 179(a) of the CAA, final disapproval of a submittal that addresses a requirement of part D, title I of the CAA (CAA sections 171–193) or is required in response to a finding of substantial inadequacy as described in CAA section 110(k)(5) (SIP Call) starts a sanctions clock. The 2007 Transport SIP was not submitted to meet either of these requirements. Therefore, this final limited disapproval does not trigger a sanctions clock.

Disapproval of a required SIP revision also triggers the requirement under CAA section 110(c) that EPA promulgate a FIP no later than 2 years from the date of the disapproval unless the State corrects the deficiency, and the Administrator approves the plan or plan revision before the Administrator promulgates such FIP. For the seven Districts with ''former subpart 1'' ozone nonattainment areas for which we are disapproving the 2007 Transport SIP (because they do not yet have SIP-approved NNSR programs meeting the approval criteria for the 1997 8-hour ozone NAAQS), we are finalizing our proposal to conclude that current implementation of The Interpretative Rule in these areas adequately addresses the requirements of element (3) of CAA section 110(a)(2)(D)(i) for the 1997 8-hour ozone NAAQS and, therefore, discharges EPA's obligation to promulgate a FIP for these limited purposes.

For all other Districts for which we are disapproving the 2007 Transport SIP, with the exception of North Coast, EPA has already incorporated into the applicable SIP the provisions of the Federal PSD program contained in 40 CFR 52.21 and, therefore, has no further obligation to promulgate a FIP to address the requirements of element (3) of CAA section 110(a)(2)(D)(i).

With respect to North Coast, which implements a PSD program that does not currently satisfy element (3) of CAA section 110(a)(2)(D)(i) for the 1997 8-hour ozone NAAQS, by separate action published in today's **Federal Register**, EPA finalized a limited PSD FIP, as discussed herein and in our May 31, 2011 proposed rule. That limited PSD FIP will apply only until EPA approves the required PSD SIP revision for this area.[18]

Finally, with respect to the five Districts [19] for which NNSR or PSD SIP revisions were necessary to meet the transport SIP approval criteria for the 1997 8-hour ozone NAAQS, we are not finalizing the limited NNSR/PSD FIPs that we had proposed in the alternative to codify in 40 CFR sections 52.233, 52.270(b)(3)(iv), and 52.270(b)(4)(iv). We are approving the 2007 Transport SIP for these Districts based on our final approval of the required SIP revisions, as discussed in Section I of this final rule and in our May 31, 2011 proposed rule.

IV. Statutory and Executive Order Reviews

A. Executive Order 12866, Regulatory Planning and Review

The Office of Management and Budget (OMB) has exempted this regulatory action from Executive Order 12866, entitled ''Regulatory Planning and Review.''

B. Paperwork Reduction Act

This action does not impose an information collection burden under the provisions of the Paperwork Reduction Act, 44 U.S.C. 3501 *et seq.* Burden is defined at 5 CFR 1320.3(b).

C. Regulatory Flexibility Act

The Regulatory Flexibility Act (RFA) generally requires an agency to conduct a regulatory flexibility analysis of any rule subject to notice and comment rulemaking requirements unless the agency certifies that the rule will not have a significant economic impact on a substantial number of small entities. Small entities include small businesses, small not-for-profit enterprises, and small governmental jurisdictions.

This rule will not have a significant impact on a substantial number of small entities because SIP approvals and limited approvals/limited disapprovals under section 110 and subchapter I, part D of the Clean Air Act do not create any new requirements but simply approve requirements that the State is already imposing. Therefore, because this limited approval/limited disapproval action does not create any new requirements, I certify that this action will not have a significant economic impact on a substantial number of small entities.

Moreover, due to the nature of the Federal-State relationship under the Clean Air Act, preparation of flexibility analysis would constitute Federal

Mojave Desert AQMD, San Joaquin Valley APCD, South Coast AQMD, Ventura County APCD, Yolo-Solano AQMD, Eastern Kern APCD, San Diego County APCD, and Monterey Bay Unified APCD.

[13] Feather River AQMD, Placer County APCD, and Sacramento Metropolitan AQMD.

[14] Mendocino County AQMD and Northern Sonoma County APCD.

[15] Mendocino County AQMD, Monterey Bay Unified AQMD, North Coast Unified AQMD, Northern Sonoma County APCD, and Sacramento Metropolitan AQMD.

[16] Mendocino County AQMD, Monterey Bay Unified APCD, North Coast Unified AQMD, and Northern Sonoma County APCD.

[17] Amador County APCD, Butte County AQMD, Calaveras County APCD, Feather River AQMD, Northern Sierra AQMD, Mariposa County APCD, and Tuolumne County APCD.

[18] We note that CARB submitted a PSD SIP revision for North Coast Unified AQMD on February 28, 2011 to address, among other things, the requirement to identify NO_X as an ozone precursor.

[19] Feather River AQMD, Placer County APCD, Sacramento Metropolitan AQMD, Mendocino County AQMD, and Northern Sonoma County APCD.

inquiry into the economic reasonableness of State action. The Clean Air Act forbids EPA to base its actions concerning SIPs on such grounds. *Union Electric Co.,* v. *U.S. EPA,* 427 U.S. 246, 255–66 (1976); 42 U.S.C. 7410(a)(2).

D. Unfunded Mandates Reform Act

Under section 202 of the Unfunded Mandates Reform Act of 1995 (''Unfunded Mandates Act''), signed into law on March 22, 1995, EPA must prepare a budgetary impact statement to accompany any proposed or final rule that includes a Federal mandate that may result in estimated costs to State, local, or tribal governments in the aggregate; or to the private sector, of $100 million or more. Under section 205, EPA must select the most cost-effective and least burdensome alternative that achieves the objectives of the rule and is consistent with statutory requirements. Section 203 requires EPA to establish a plan for informing and advising any small governments that may be significantly or uniquely impacted by the rule.

EPA has determined that the limited approval/limited disapproval action promulgated today does not include a Federal mandate that may result in estimated costs of $100 million or more to either State, local, or tribal governments in the aggregate, or to the private sector. This Federal action approves pre-existing requirements under State or local law, and imposes no new requirements. Accordingly, no additional costs to State, local, or tribal governments, or to the private sector, result from this action.

E. Executive Order 13132, Federalism

Federalism (64 FR 43255, August 10, 1999) revokes and replaces Executive Orders 12612 (Federalism) and 12875 (Enhancing the Intergovernmental Partnership). Executive Order 13132 requires EPA to develop an accountable process to ensure ''meaningful and timely input by State and local officials in the development of regulatory policies that have federalism implications.'' ''Policies that have federalism implications'' is defined in the Executive Order to include regulations that have ''substantial direct effects on the States, on the relationship between the national government and the States, or on the distribution of power and responsibilities among the various levels of government.'' Under Executive Order 13132, EPA may not issue a regulation that has federalism implications, that imposes substantial direct compliance costs, and that is not required by statute, unless the Federal government provides the funds necessary to pay the direct compliance costs incurred by State and local governments, or EPA consults with State and local officials early in the process of developing the proposed regulation. EPA also may not issue a regulation that has federalism implications and that preempts State law unless the Agency consults with State and local officials early in the process of developing the proposed regulation.

This rule will not have substantial direct effects on the States, on the relationship between the national government and the States, or on the distribution of power and responsibilities among the various levels of government, as specified in Executive Order 13132, because it merely approves in part and disapproves in part a State plan implementing a Federal requirement, and does not alter the relationship or the distribution of power and responsibilities established in the Clean Air Act. Thus, the requirements of section 6 of the Executive Order do not apply to this rule.

F. Executive Order 13175, Coordination With Indian Tribal Governments

Executive Order 13175, entitled ''Consultation and Coordination with Indian Tribal Governments'' (65 FR 67249, November 9, 2000), requires EPA to develop an accountable process to ensure ''meaningful and timely input by tribal officials in the development of regulatory policies that have tribal implications.'' This rule does not have tribal implications, as specified in Executive Order 13175. It will not have substantial direct effects on tribal governments, on the relationship between the Federal government and Indian tribes, or on the distribution of power and responsibilities between the Federal government and Indian tribes. Thus, Executive Order 13175 does not apply to this rule.

G. Executive Order 13045, Protection of Children From Environmental Health Risks and Safety Risks

EPA interprets Executive Order 13045 (62 FR 19885, April 23, 1997) as applying only to those regulatory actions that concern health or safety risks, such that the analysis required under section 5–501 of the Executive Order has the potential to influence the regulation. This rule is not subject to Executive Order 13045, because it approves in part and disapproves in part a State plan implementing a Federal requirement.

H. Executive Order 13211, Actions That Significantly Affect Energy Supply, Distribution, or Use

This rule is not subject to Executive Order 13211, ''Actions Concerning Regulations That Significantly Affect Energy Supply, Distribution, or Use'' (66 FR 28355, May 22, 2001) because it is not a significant regulatory action under Executive Order 12866.

I. National Technology Transfer and Advancement Act

Section 12 of the National Technology Transfer and Advancement Act (NTTAA) of 1995 requires Federal agencies to evaluate existing technical standards when developing a new regulation. To comply with NTTAA, EPA must consider and use ''voluntary consensus standards'' (VCS) if available and applicable when developing programs and policies unless doing so would be inconsistent with applicable law or otherwise impractical.

The EPA believes that VCS are inapplicable to this action. Today's action does not require the public to perform activities conducive to the use of VCS.

J. Executive Order 12898: Federal Actions To Address Environmental Justice in Minority Populations and Low-Income Populations

Executive Order 12898 (59 FR 7629, Feb. 16, 1994) establishes federal executive policy on environmental justice. Its main provision directs federal agencies, to the greatest extent practicable and permitted by law, to make environmental justice part of their mission by identifying and addressing, as appropriate, disproportionately high and adverse human health or environmental effects of their programs, policies, and activities on minority populations and low-income populations in the United States.

EPA lacks the discretionary authority to address environmental justice in this rulemaking.

K. Congressional Review Act

The Congressional Review Act, 5 U.S.C. 801 *et seq.*, as added by the Small Business Regulatory Enforcement Fairness Act of 1996, generally provides that before a rule may take effect, the agency promulgating the rule must submit a rule report, which includes a copy of the rule, to each House of the Congress and to the Comptroller General of the United States. EPA will submit a report containing this rule and other required information to the U.S. Senate, the U.S. House of Representatives, and the Comptroller General of the United States prior to publication of the rule in

Federal Register. A major rule cannot take effect until 60 days after it is published in the **Federal Register**. This action is not a ''major rule'' as defined by 5 U.S.C. 804(2).

L. Petitions for Review of This Action

Under section 307(b)(1) of the Clean Air Act, petitions for judicial review of this action must be filed in the United States Court of Appeals for the appropriate circuit by October 7, 2011. Filing a petition for reconsideration by the Administrator of this final rule does not affect the finality of this rule for the purposes of judicial review nor does it extend the time within which a petition for judicial review may be filed, and shall not postpone the effectiveness of such rule or action. This action may not be challenged later in proceedings to enforce its requirements. (*See* section 307(b)(2).)

List of Subjects in 40 CFR Part 52

Air pollution control, Incorporation by reference, Intergovernmental relations, Nitrogen dioxide, Ozone, Particulate matter, Reporting and recordkeeping requirements, and Volatile organic compounds.

Dated: July 25, 2011.

Keith Takata,

Acting Regional Administrator, Region IX.

Part 52, chapter I, title 40 of the Code of Federal Regulations is amended as follows:

PART 52—[AMENDED]

■ 1. The authority citation for part 52 continues to read as follows:

Authority: 42 U.S.C. 7401 *et seq.*

■ 2. Section 52.220 is amended by paragraph (c)(386)(ii)(A)(4) to read as follows:

§ 52.220 Identification of plan.

* * * * *

(c) * * *

(386) * * *

(ii) * * *

(A) * * *

(*4*) 2007 Transport SIP at pages 21–22 (Attachment A) (''Evaluation of interference with Prevention of Significant Deterioration Measures of any other State'').

* * * * *

■ 3. Section 52.283 is amended by adding paragraph (a)(3) to read as follows:

§ 52.283 Interstate Transport.

(a) * * * (3) The requirements of section 110(a)(2)(D)(i)(II) regarding interference with any other state's measures required under title I, part C of the Clean Air Act to prevent significant deterioration of air quality, except that these requirements are not fully met in the Air Pollution Control Districts (APCDs) or Air Quality Management Districts (AQMDs) listed in ths paragraph.

(i) Amador County APCD
(ii) Butte County AQMD
(iii) Calaveras County APCD
(iv) Feather River AQMD
(v) Northern Sierra AQMD
(vi) Mariposa County APCD
(vii) Tuolumne County APCD
(viii) North Coast Unified AQMD
(ix) All other areas in California that are subject to the Federal PSD program as provided in 40 CFR 52.270.

* * * * *

[FR Doc. 2011–19898 Filed 8–5–11; 8:45 am]

BILLING CODE 6560–50–P

ENVIRONMENTAL PROTECTION AGENCY

40 CFR Part 52

[EPA–R09–OAR–2011–0211; FRL–9448–5]

Limited Federal Implementation Plan; Prevention of Significant Deterioration; California; North Coast Unified Air Quality Management District

AGENCY: Environmental Protection Agency (EPA).

ACTION: Final rule.

SUMMARY: EPA is finalizing a limited Federal Implementation Plan (FIP) for the North Coast Unified Air Quality Management District (NCUAQMD) portion of the California State Implementation Plan (SIP). We proposed this action simultaneously with our proposed limited approval and limited disapproval of a SIP revision submitted by California to address the ''transport SIP'' provisions of Clean Air Act (CAA) section 110(a)(2)(D)(i) for the 1997 8-hour ozone National Ambient Air Quality Standards (NAAQS or standards) and the 1997 fine particulate matter ($PM_{2.5}$) NAAQS (2007 Transport SIP) (76 FR 31263, May 31, 2011). This limited FIP establishes Federal Prevention of Significant Deterioration (PSD) permitting requirements for nitrogen oxides (NO_X) emission sources only in the NCUAQMD.

DATES: *Effective Date:* This rule is effective on September 7, 2011.

ADDRESSES: EPA has established docket number EPA–R09–OAR–2011–0211 for this action. Generally, documents in the docket for this action are available electronically at *http://www.regulations.gov* or in hard copy at EPA Region IX, 75 Hawthorne Street, San Francisco, California. While all documents are listed at *http://www.regulations.gov,* some information may be publicly available only at the hard copy location (*e.g.,* copyrighted material, large maps, multi-volume reports), and some may not be publicly available in either location (*e.g.,* Confidential Business Information). To inspect the hard copy materials, please schedule an appointment during normal business hours with the contact listed in the **FOR FURTHER INFORMATION CONTACT** section.

FOR FURTHER INFORMATION CONTACT: Rory Mays, Air Planning Office (AIR–2), U.S. Environmental Protection Agency, Region IX, (415) 972–3227, *mays.rory@epa.gov.*

SUPPLEMENTARY INFORMATION: Throughout this document, ''we,'' ''us'' and ''our'' refer to EPA.

Table of Contents

I. Proposed Action
II. Public Comments
III. EPA Action
IV. Statutory and Executive Order Reviews

I. Proposed Action

On May 31, 2011 (76 FR 31263), EPA proposed a limited approval and limited disapproval of California's 2007 Transport SIP with respect to the requirement in CAA section 110(a)(2)(D)(i)(II) that each SIP contain adequate measures prohibiting emissions of air pollutants in amounts which will interfere with other States' measures required under title I, part C of the CAA to prevent significant deterioration of air quality. We refer to this requirement as ''element (3)'' of section 110(a)(2)(D)(i). Simultaneously, EPA proposed a limited FIP for the NCUAQMD to address certain requirements of ''element (3)'' of section 110(a)(2)(D)(i) that California's 2007 Transport SIP failed to satisfy. EPA proposed this limited FIP because of a statutory duty that we were obligated under the terms of a Consent Decree to meet by July 10, 2011, unless we approved a SIP meeting the applicable requirements by that date.[1] This Consent Decree deadline has been extended by stipulation to July 29, 2011.[2]

Specifically, for the NCUAQMD, we proposed to disapprove California's

[1] *See WildEarth Guardians* v. *U.S. EPA* (Case No. 4:09–CV–02453–CW), Consent Decree dated November 10, 2009, as amended by *Notice of Stipulated Extensions to Consent Decree Deadlines,* dated April 28, 2011, and *Notice of Stipulated Extension to Consent Decree Deadline,* dated July 7, 2011.

[2] *See ibid.*

2007 Transport SIP with respect to element (3) of CAA section 110(a)(2)(D)(i) for the 1997 8-hour ozone NAAQS because the NCUAQMD's SIP-approved PSD permit program does not explicitly identify NO_X as an ozone precursor. Although California recently submitted a PSD SIP revision to EPA for the NCUAQMD to address this requirement,[3] we noted in our proposed rule that we would not be able to act on this SIP revision in time to meet our July 10, 2011 consent decree deadline. We proposed, therefore, to promulgate a limited PSD FIP for the NCUAQMD based on the provisions of 40 CFR 52.21 regulating NO_X as an ozone precursor. We noted that EPA would retain authority to implement the applicable requirements of 40 CFR 52.21 for NO_X emission sources in NCUAQMD (unless and until EPA delegates such authority to the District), while the District would retain authority to continue implementing any existing SIP-approved PSD requirements. We also noted that this limited FIP would apply only until EPA approves a PSD SIP revision for the NCUAQMD addressing this requirement.

II. Public Comments

EPA's proposed action provided a 30-day public comment period. During this period, we received no comments on this element of our proposed action.

III. EPA Action

Under CAA section 110(c)(1) and for the reasons discussed in our May 31, 2011 proposed rule, we are finalizing the limited PSD FIP for the NCUAQMD as proposed. The CAA authority for EPA to promulgate a FIP is found in CAA section 110(c)(1), which provides—

> The Administrator shall promulgate a Federal implementation plan at any time within 2 years after the Administrator—(B) disapproves a State implementation plan submission in whole or in part * * * unless the State corrects the deficiency, and [EPA] approves the plan or plan revision, before the Administrator promulgates such [FIP].

In a separate action published in today's Federal Register, EPA finalized the limited approval and limited disapproval of California's 2007 Transport SIP, including the disapproval with respect to the NCUAQMD because of the identified deficiency in its SIP-approved PSD program. Accordingly, under CAA sections 110(c)(1) and for the reasons set forth in our May 31, 2011 proposed rule, we are finalizing a limited PSD FIP for the NCUAQMD. This action incorporates the provisions of EPA's Federal PSD program at 40 CFR 52.21, as they apply to new or modified major sources of NO_X as precursors to ozone, into the NCUAQMD portion of the California SIP.

EPA currently implements a partial PSD FIP for certain types of projects located in the NCUAQMD. *See* 40 CFR 52.270(b)(2). The limited PSD FIP promulgated today adds new and modified major sources of NO_X emissions to the list of projects that are already subject to the Federal PSD Program as provided in 40 CFR 52.270(b)(2). Thus, EPA will implement the applicable requirements of 40 CFR 52.21 for major NO_X emission sources in North Coast, unless and until EPA delegates such authority to the District pursuant to 40 CFR 52.21(u). The District, however, retains authority to continue implementing any existing SIP-approved PSD requirements.

This limited PSD FIP will apply only until EPA approves a PSD SIP revision for NCUAQMD meeting the PSD requirements applicable to NO_X emissions as precursors to ozone, at which time EPA will rescind this limited FIP.

IV. Statutory and Executive Order Reviews

A. Executive Order 12866: Regulatory Planning and Review and Executive Order 13563: Improving Regulation and Regulatory Review

This final action is not a ''significant regulatory action'' under the terms of Executive Order (EO) 12866 (58 FR 51735, October 4, 1993) and is therefore not subject to review under Executive Order 12866 and 13563 (76 FR 3821, January 21, 2011).

B. Paperwork Reduction Act

This final action does not impose an information collection burden under the provisions of the Paperwork Reduction Act, 44 U.S.C. 3501 *et seq*. Burden is defined at 5 CFR 1320.3(b).

C. Regulatory Flexibility Act

The Regulatory Flexibility Act (RFA) generally requires an agency to prepare a regulatory flexibility analysis of any rule subject to notice and comment rulemaking requirements under the Administrative Procedure Act or any other statute unless the agency certifies that the rule will not have a significant economic impact on a substantial number of small entities. Small entities include small businesses, small organizations, and small governmental jurisdictions.

For purposes of assessing the impacts of this action on small entities, small entity is defined as: (1) A small business that is a small industrial entity as defined in the U.S. Small Business Administration (SBA) size standards (see 13 CFR 121.201); (2) a small governmental jurisdiction that is a government of a city, county, town, school district, or special district with a population of less than 50,000; or (3) a small organization that is any not-for-profit enterprise that is independently owned and operated and is not dominant in its field.

In the case of North Coast, EPA has not yet proposed to approve the SIP revision necessary to make NO_X a precursor to ozone in the context of PSD permitting. For this area, EPA is establishing a narrow FIP to fill the gap with respect to the PSD requirement to address NO_X as a precursor to ozone. To EPA's knowledge, in the past ten years there has been no more than one small entity in this area subject to PSD permitting requirements for NO_X emissions, and this is not a substantial number of entities. EPA does not anticipate that there will be additional sources that would require such a permit in the future, and EPA is not required to analyze theoretical future impacts. It would be speculative to estimate potential impacts on sources based solely on theoretical future sources.

After considering the economic impacts of this rule on small entities, I certify that this final action will not have a significant economic impact on a substantial number of small entities. Although this rule establishes Federal permitting requirements that may apply to a small number of sources, EPA believes that in such an event, there will not be a significant economic impact on the potentially affected sources and that any such impacts would not affect a substantial number of sources, regardless of size.

D. Unfunded Mandates Reform Act

This final action contains no federal mandates under the provisions of Title II of the Unfunded Mandates Reform Act of 1995 (UMRA, 2 U.S.C. 1531–1538) for state, local or tribal governments or the private sector. The action imposes no enforceable duty on any state, local or tribal governments or the private sector. This action merely prescribes EPA's action in an area for which EPA has disapproved the 2007 Transport SIP in part and not yet approved a corrective SIP revision.

[3] By letter dated February 28, 2011, California submitted a revised NSD/PSD rule (Rule 110, New Source Review (NSR) and Prevention of Significant Deterioration (PSD)) for approval into the NCUAQMD portion of the California SIP. The NCUAQMD adopted this amended rule on December 9, 2010.

Thus, this rule is not subject to the requirements of sections 202 or 205 of UMRA.

This final action is also not subject to the requirements of section 203 of UMRA because it contains no regulatory requirements that might significantly or uniquely affect small governments. This action merely prescribes EPA's action in an area for which EPA has disapproved the 2007 Transport SIP in part and not yet approved a corrective SIP revision.

E. Executive Order 13132: Federalism

This final action does not have federalism implications. It will not have substantial direct effects on the states, on the relationship between the national government and the states, or on the distribution of power and responsibilities among the various levels of government, as specified in Executive Order 13132. This action merely prescribes EPA's action in an area for which EPA has disapproved the 2007 Transport SIP in part and not yet approved a corrective SIP revision. Thus, Executive Order 13132 does not apply to this action.

F. Executive Order 13175: Coordination With Indian Tribal Governments

This final action does not have tribal implications, as specified in Executive Order 13175 (65 FR 67249, November 9, 2000). This action does not impose a FIP in any tribal area. Thus, Executive Order 13175 does not apply to this action.

G. Executive Order 13045: Protection of Children From Environmental Health Risks and Safety Risks

EPA interprets EO 13045 (62 FR 19885, April 23, 1997) as applying only to those regulatory actions that concern health or safety risks, such that the analysis required under section 5–501 of the EO has the potential to influence the regulation. This final action is not subject to EO 13045 because it merely prescribes EPA's action in an area for which EPA has disapproved the 2007 Transport SIP in part and not yet approved a corrective SIP revision.

H. Executive Order 13211: Actions That Significantly Affect Energy Supply, Distribution, or Use

This action is not subject to Executive Order 13211 (66 FR 28355 (May 22, 2001)), because it is not a significant regulatory action under Executive Order 12866.

I. National Technology Transfer and Advancement Act

Section 12(d) of the National Technology Transfer and Advancement Act of 1995 (''NTTAA''), Public Law 104–113, 12(d) (15 U.S.C. 272 note) directs EPA to use voluntary consensus standards in its regulatory activities unless to do so would be inconsistent with applicable law or otherwise impractical. Voluntary consensus standards are technical standards (*e.g.,* materials specifications, test methods, sampling procedures, and business practices) that are developed or adopted by voluntary consensus standards bodies. NTTAA directs EPA to provide Congress, through OMB, explanations when the Agency decides not to use available and applicable voluntary consensus standards. This rulemaking does not involve technical standards. Therefore, EPA did not consider the use of any voluntary consensus standards.

J. Executive Order 12898: Federal Actions To Address Environmental Justice in Minority Populations and Low-Income Populations

Executive Order 12898 (59 FR 7629, February 16, 1994) establishes federal executive policy on environmental justice. Its main provision directs federal agencies, to the greatest extent practicable and permitted by law, to make environmental justice part of their mission by identifying and addressing, as appropriate, disproportionately high and adverse human health or environmental effects of their programs, policies, and activities on minority populations and low-income populations in the United States.

EPA has determined that this final rule will not have disproportionately high and adverse human health or environmental effects on minority or low-income populations because it does not affect the level of protection provided to human health or the environment. This rule merely prescribes EPA's action in an area for which EPA has disapproved the 2007 Transport SIP in part and not yet approved a corrective SIP revision.

K. Congressional Review Act

The Congressional Review Act, 5 U.S.C. section 801 *et seq.,* as added by the Small Business Regulatory Enforcement Fairness Act of 1996, generally provides that before a rule may take effect, the agency promulgating the rule must submit a rule report, which includes a copy of the rule, to each House of the Congress and to the Comptroller General of the United States. EPA will submit a report containing this rule and other required information to the U.S. Senate, the U.S. House of Representatives, and the Comptroller General of the United States prior to publication of the rule in the **Federal Register**. A major rule cannot take effect until 60 days after it is published in the **Federal Register**. This final action is not a ''major rule'' as defined by 5 U.S.C. section 804(2). This rule will be effective on September 7, 2011.

L. Determination Under Section 307(d)

Pursuant to section 307(d)(1)(B) of the CAA, this action is subject to the provisions of section 307(d). Section 307(d)(1)(B) provides that the provisions of section 307(d) apply to ''the promulgation or revision of an implementation plan by the Administrator under section 110(c) of this Act.''

M. Petitions for Judicial Review

Under section 307(b)(1) of the Clean Air Act, petitions for judicial review of this action must be filed in the United States Court of Appeals for the appropriate circuit by October 7, 2011. Filing a petition for reconsideration by the Administrator of this final rule does not affect the finality of this rule for the purposes of judicial review nor does it extend the time within which a petition for judicial review may be filed, and shall not postpone the effectiveness of such rule or action. This action may not be challenged later in proceedings to enforce its requirements (see section 307(b)(2)).

List of Subjects in 40 CFR Part 52

Air pollution control, Environmental protection, Incorporation by reference, Intergovernmental relations, Nitrogen dioxide, Ozone.

Dated: July 29, 2011.

Lisa P. Jackson,

Administrator.

Part 52, Chapter I, Title 40 of the Code of Federal Regulations is amended as follows:

PART 52—-[AMENDED]

■ 1. The authority citation for Part 52 continues to read as follows:

Authority: 42 U.S.C. 7401 *et seq.*

Subpart F—California

■ 2. Section 52.270 is amended by adding paragraph (b)(2)(iv) to read as follows:

§ 52.270 Significant deterioration of air quality.

* * * * *

(b) * * *

(2) * * *

(iv) Those projects which are major stationary sources or major

modifications for nitrogen oxides as precursors to ozone under § 52.21.

* * * * *

[FR Doc. 2011–19897 Filed 8–5–11; 8:45 am]

BILLING CODE 6560–50–P

DEPARTMENT OF TRANSPORTATION

National Highway Traffic Safety Administration

49 CFR Part 571

[Docket No. NHTSA–2007–28322]

RIN 2127–AL00

Federal Motor Vehicle Safety Standards; Lamps, Reflective Devices, and Associated Equipment

AGENCY: National Highway Traffic Safety Administration (NHTSA), Department of Transportation (DOT).

ACTION: Final rule; response to petitions for reconsideration.

SUMMARY: On December 4, 2007, NHTSA published a final rule that amended the Federal motor vehicle safety standard for lamps, reflective devices, and associated equipment with an effective date of September 1, 2008. In response, the agency received thirteen petitions for reconsideration. The effective date of the final rule was delayed in subsequent notices to December 1, 2012. This document corrects several technical errors in the final rule and completes the agency's response to the issues raised in the submitted petitions for reconsideration.

DATES: *Effective Date:* The final rule is effective December 1, 2012. The incorporation by reference of certain publications listed in the rule is approved by the Director of the Federal Register as of December 1, 2012.

Compliance Date: Voluntary early compliance is permitted beginning August 8, 2011.

Petitions for Reconsideration: Petitions for reconsideration of this final rule must be received not later than September 22, 2011.

ADDRESSES: Any petitions for reconsideration should refer to the docket number of this document and be submitted to: Administrator, National Highway Traffic Safety Administration, 1200 New Jersey Avenue, SE., West Building, Ground Floor, Docket Room W12–140, Washington, DC 20590.

FOR FURTHER INFORMATION CONTACT:

For technical issues: Mr. Markus Price, Office of Crash Avoidance Standards (NVS–121), NHTSA, 1200 New Jersey Avenue, SE., West Building, Washington, DC 20590 (Telephone: (202) 366–0098) (Fax: (202) 366–7002).

For legal issues: Mr. Thomas Healy, Office of the Chief Counsel (NCC–112), NHTSA, 1200 New Jersey Avenue, SE., West Building, Washington, DC 20590 (Telephone: (202) 366–2992) (Fax: (202) 366–3820).

SUPPLEMENTARY INFORMATION:

Table of Contents

I. Executive Summary
II. Background
III. Petitions for Reconsideration
  A. Definitions
  B. Technical Amendments
  C. Claims of Substantive Amendment
  D. Amendments To Improve Clarity
IV. Agency Analysis and Response
  A. Definitions
  B. Technical Amendments
  C. Claims of Substantive Amendment
  D. Amendments To Improve Clarity
  E. Preemptive Effect of FMVSS No. 108
V. Rulemaking Analyses and Notices

I. Executive Summary

On December 4, 2007 NHTSA published a final rule [1] that amended Federal Motor Vehicle Safety Standard (FMVSS) No. 108, *Lamps, reflective devices, and associated equipment.* That final rule reorganized the regulatory text and explicitly added to the text existing requirements from third-party standards that had previously been incorporated by reference. In rewriting the standard NHTSA sought not to make any substantive changes or impose new requirements on regulated parties. The objectives of the rewrite were to: (1) Make requirements easier to find and comprehend; (2) present performance requirements and test procedures together in one place, instead of obliging the user to locate the relevant provisions of third-party documents previously incorporated by reference; and (3) update FMVSS No. 108 to reflect significant letters of interpretation. The rewrite of FMVSS No. 108 was considered administrative in nature because the standard's existing requirements and obligations were not increased, decreased, or substantively modified.

The agency received several petitions for reconsideration which stated some aspects of the final rule failed to adhere to the agency's stated goal of not substantively modifying the standard's existing requirements. Also, the agency received petitions for reconsideration that identified formatting and grammatical errors. In addition to the petitions addressing the technical aspects of the standard, the agency also received a submission questioning the discussion of the preemptive effect of FMVSS No. 108 included in the preamble of the final rule. After careful review and consideration of the petitions for reconsideration, the agency is amending FMVSS No. 108 in order to correct technical errors within the final rule and is providing a partial response to petitions for reconsideration including the submission addressing the preemptive effect of the rule. The remaining items in the petitions for reconsideration, which include substantive issues and are not addressed within this partial response, will be addressed in a separate notice. We expect to publish that notice before the final rule effective date of December 1, 2012.

II. Background

NHTSA published a Notice of Proposed Rulemaking (NPRM) on December 30, 2005 [2] proposing to reorganize FMVSS No. 108 and improve the clarity of the standard's requirements, thereby increasing its utility for regulated parties. The proposed administrative rewrite attempted to make the standard more understandable by adopting a simplified numbering scheme to improve organization; by grouping related materials in a more logical and consistent sequence; and by reducing the certification burden of regulated parties who previously needed to review a few dozen third-party documents.

From a regulatory perspective, it was the agency's intention, as expressed in the NPRM, that the administrative rewrite of FMVSS No. 108 would neither result in any current obligations being diminished, nor any new obligations being imposed. In other words, the substantive requirements of the standard would be identical to those of the currently-applicable version of FMVSS No. 108 and underlying documents incorporated by reference. Therefore, we stated that regulated parties would not need to make any changes to their respective products or production processes if our proposal were made final.

The agency considered comments received on the NPRM and published a final rule on December 4, 2007. The final rule incorporated some of the comments received in response to the NPRM by further consolidating test procedures and performance requirements from multiple tables to single paragraphs, incorporating additional Society of Automotive Engineers (SAE) documents directly

[1] 72 FR 68234, (Dec. 4, 2007).

[2] 70 FR 77454, (Dec. 30, 2005).

into the regulatory text, and further consolidating marking requirements. The final rule also added additional tables and figures and changed the structure of the standard to present the requirements in a more standardized and user-friendly manner. The final rule amended FMVSS No. 108 by: (1) Reorganizing the regulatory text so that it provides a more straightforward and logical presentation of the applicable regulatory requirements; (2) incorporating important agency interpretations of the existing requirements; and (3) reducing reliance on third-party documents incorporated by reference. The preamble of the final rule again stated that it was not the agency's intention to create any substantive changes to the standard through the administrative rewrite.

III. Petitions for Reconsideration

NHTSA received thirteen timely petitions for reconsideration from automotive manufacturers, lighting suppliers, motorcycle manufacturers, material manufacturers, a testing laboratory, and a trial bar association.[3] The Alliance of Automobile Manufacturers (AAM), Ford Motor Company (Ford), Nissan North America (Nissan), Toyota Motor North America (Toyota), Koito Manufacturing Co. LTD (Koito), Valeo Lighting Systems (Valeo), Grote Industries LLC (Grote), Harley-Davidson Motor Company (Harley-Davidson), GE Consumer & Industrial—Lighting (GE), SABIC Innovative Plastics (SABIC), Calcoast, and American Association for Justice (AAJ) submitted petitions for reconsideration of the final rule. The Motor and Equipment Manufacturers Association (MEMA), the Transportation Safety Equipment Institute (TSEI), and the Motor Vehicle Lighting Council (MVLC), collectively the Associations, submitted a joint petition for reconsideration. Several of the petitions claimed that the final rule imposed new substantive requirements that were not previously included in the old standard. Many of the petitions pointed out grammatical and formatting issues contained in the final rule. The petitions also requested that the agency make additional technical changes and amend the format of some areas of the final rule to further advance the goals of the rewrite. Other petitions claimed that the final rule failed to accurately transpose previously referenced documents or interpretation letters into the regulation text. The petition submitted by AAJ challenged the preemptive language of the final rule preamble. The remaining petitions requested substantive changes to the rule.

The matters raised in the petitions fall generally into four categories and will be answered as follows: (1) Requests that additional definitions be added to the final rule; (2) requests for technical amendments to the final rule to correct grammar, formatting, and technical issues; (3) claims that the agency added new substantive requirements to the standard during the rewrite; and (4) requests for amendments to the standard to improve readability or clarify certain language. The petitions requesting substantive amendments to the rule will be addressed in another notice.

A. Definitions

Several petitioners requested that the agency add new definitions to clarify terms used in the text of the final rule. AAM and Nissan requested that the definition of a clearance lamp be modified to remove the language containing the mounting and spacing requirements for the lamp. AAM and Nissan claimed that the mounting and spacing requirements are contained elsewhere in FMVSS No. 108, therefore, it was not necessary that these requirements be included in the definition. Nissan claimed that removing the mounting and spacing requirements would make the definition more consistent with the definitions of other lamps regulated by the standard. Similarly, both petitioners requested that language regarding mounting and spacing requirements be removed from the definitions of identification and side marker lamps. AAM and Nissan suggested a definition that would eliminate the mounting location description and spacing requirements from each of these three lamp definitions.

The Associations, Grote, and Valeo suggested creating a definition for the term ''headlamp system.'' Each of these petitioners suggested the following definition: ''A vehicle-based headlighting system which is composed of headlamps mounted on opposite sides of and symmetrical to the centerline of the vehicle.''

Nissan suggested a definition for the term ''multiple compartment lamp.'' Nissan suggested the following definition: ''Multiple compartment lamp means a device which gives its indication by two or more areas, illuminated by separate light sources, which are joined by one or more common parts, such as a housing or lens.'' Nissan pointed out that this definition was similar to the definition used in an interpretation letter to Al Cunningham on November 3, 1988[4] that responded to his request for clarification as to the meaning of the term ''multiple compartment lamp.''

The Associations pointed out that the agency placed the definitions for all of the various headlamp types, except ''combination headlamp,'' in the definition section of the final rule. They suggested the following definition be added to the definitions section: ''Combination headlamp system: For a two lamp system, a combination of two different headlamps chosen from: Type F, an integral beam headlamp, or a replaceable bulb headlamp and for a four lamp system, any combination of four different headlamps chosen from: Type F, an integral beam headlamp, or a replaceable bulb headlamp.'' The Associations and Grote recommended replacing the terms ''lamps section'' or ''compartments'' with a universal term ''lighted sections.''

B. Technical Amendments

The petitions requested various technical amendments to the standard to amend formatting and grammatical issues. Nissan stated that the agency referenced an American Society for Testing and Materials (ASTM) specification in the final rule in paragraph S14.5.3.2 yet this specification was not listed in paragraph S5.

Nissan pointed out a grammatical error in paragraph S6.4.4. Nissan suggested changing the phrase ''* * * overall width, that are * * *'' to ''* * * overall width, that is * * *''

AAM requested that the ''DOT marking'' requirement for headlamps located in paragraph S6.5.1 be moved to paragraph S6.5.3 so that it would be located with the other headlamp markings.

The Associations and AAM noted that paragraph S6.5.3 occurs twice, once marked *Headlamp markings* and once marked *Trademark.* They requested that the Trademark paragraph numbering change to S6.5.3.1.

AAM requested that the format of ''SEALED BEAM,'' as shown in paragraph S6.5.3.3.1, be standardized with the format as it appears in Table III, which is not fully capitalized. AAM requested that the phrase be modified to ''Sealed Beam'' in paragraph S6.5.3.3.1.

AAM stated that in paragraph S7.1.1.11, FMVSS No. 108's revised text uses the term ''compartments'' even though the preamble to that rule stated

[3] NHTSA also received several petitions for reconsideration after the January 18, 2008 deadline specified in the final rule. It is the agency's policy to treat untimely petitions for reconsideration as petitions for rulemaking. *See* 49 CFR 553.35.

[4] *http://isearch.nhtsa.gov/files/3135o.html.*

that this term would be used in the singular form.

AAM recommended adding a qualifying statement ''provided that the requirements of S6.1.3.2 are met'' to paragraphs S7.1.1.11.1, similar to the statements used in paragraphs S7.1.2.11.1, S7.2.11.1, and S7.3.11.1, in order to clarify the requirements for multiple compartment lamps.

Nissan requested that the phrase ''generated by a 1.0 radius around * * *'' be changed to ''generated by a 1.0 degree radius around * * *'' in paragraph S7.1.1.12.4.

AAM recommended a modification to paragraph S7.2.9, which deals with taillamp markings. AAM requested that the agency change the pointing statement in that paragraph to point to the specific subparagraph S6.5.1.2 rather than paragraph S6.5. AAM also requested that a more specific pointer be added for paragraphs S7.3.9, S7.4.9, S7.5.9, S7.6.9, S7.7.9, S7.8.9, S7.9.9, S7.10.9, S7.11.9, and S8.1.9.

AAM requested that S7.7.4 be changed from pointing to Tables I (a–c) that state ''No requirement,'' to simply state within that text ''No Requirement.'' AAM pointed out that this is consistent with other areas of the regulatory text such as in paragraphs S7.7.7 and S7.7.8.

The Associations requested that the paragraph numeration be corrected in the subparagraphs of S7.9.14. They stated that the paragraph structure contains S7.9.14.1.1 and S7.9.14.1.2, however, it does not contain a paragraph S7.9.14.1.

Nissan noted a grammatical error in paragraph S14.2.1.5.2. It requested that the wording be modified from ''* * * of multiple compartment lamp or * * *'' to ''* * * of multiple compartment lamps or * * *''.

Toyota requested that paragraph S14.3.1 be modified to use the abbreviation ''in.'' for the unit inch instead of the abbreviation ''in'' without a period.

GE and the Associations requested a modification to paragraph S14.6.9.1.1, which they pointed out incorrectly converts 176 degrees Fahrenheit to 60 degrees Celsius. They requested the Celsius number be changed to 80 degrees.

Nissan and AAM stated that within Table I–a, the subtitle *Additional Lamps, Required on All Multipurpose Passenger Vehicles (MPV), Trucks, and Buses, 2032 MM or More in Overall Width* appears twice. AAM and Nissan also requested that the activation criteria text be moved to the *Device Activation* column from the *Mounting Height* column for the lower beam headlamp, which is currently blank. In addition, Nissan requested that the activation specifications for the upper beam headlamp read: ''Steady burning, except may be flashed for signaling purposes.'' Nissan also requested that English units of measurement be added to the *Mounting Height* column of Table I–a for the lower and upper beam headlamps. AAM requested that all measurements in Tables I–a, I–b, and I–c be displayed in both English and metric units. AAM requested that a horizontal line be placed above the DRL subtitle. Both Nissan and AAM requested that the mounting location and color information be moved to the appropriate column for reflex reflectors in Table I–a. Nissan asked that the subtitle for additional lamps required for wide vehicles change the word ''truck'' to ''trucks.'' AAM and Nissan requested that the turn signal truck tractor exception be moved to a new line.

AAM noted that a billing code is inappropriately located after Table I–c. AAM requested that, within the mounting location column for the upper beam headlamp, a note be added that states: ''See additional requirements in S10.14.1, S10.17.1.2, and S10.17.1.3,'' to reference additional mounting requirements for motorcycle headlamps. AAM also noted that the same column for the lower beam headlamp points to paragraph S6.1.4.2.1.3, however, this paragraph does not exist. The Associations and AAM requested that the word ''between'' be added to the turn signal minimum edge to edge distance.

AAM claimed that the term ''Motorcycle Headlamp'' in Table III should read ''Motorcycle Replaceable Bulb Headlamp'' so that it agrees with paragraph S10.17.2. AAM also suggested adding the word ''Optional'' in the markings of the Table III column for *Lamps (Other Than Headlamps), Reflective Devices, and Associated Equipment.* AAM also stated it found an incorrect pointing statement to S6.5.4.3 for the replaceable bulb headlamp in the *Requirement* column of Table III. AAM believed that the pointer should instead point to paragraph S6.5.3.4.1. AAM also pointed out that Table III does not contain the marking requirements for a replaceable lens headlamp called out in paragraph 5.8.11 of the existing FMVSS No. 108. Finally, AAM requested that the phrase ''See requirements'' be added to the sealed beam headlamp type designation in the *Marking Location* column.

For Table V–a, Nissan requested that the measurements for the required visibility for the backup lamp should be in both metric and English units.

The Associations, Nissan, and AAM pointed out that the alignment of lighting device functions to their corner points is incorrect in Table V–b. AAM requested the elimination of the billing code from the bottom of that table.

Nissan requested that the word ''zone'' be replaced with the word ''group'' in footnote 2 in Table VIII. Nissan also requested that the word ''group'' replace the word ''zone'' in footnote 4 of Table XII. Nissan made the same request of footnote 2 of Tables XIV and XV. Nissan requested that the agency amend footnote 2 of Table XVI to replace the word ''zone'' with the word ''group.''

AAM requested that the agency amend footnote 6 of Table IX so that the photometric intensity requirements for stop lamps combined with taillamps correspond with SAE J1398 (MAY 1985), *Stop Lamps for Use on Motor Vehicles 2032 mm or More in Overall Width,* incorporated by reference in the currently applicable version of FMVSS No. 108. AAM stated that footnote 6 of Table IX should be changed to ''values followed by a slash * * *'' (in contrast to the current ''Values preceded by a slash'') for the H–5L test point so that the standard required the correct photometric multiplier for wide vehicles.

In Table XV, Nissan noted that the test points columns should be listed as horizontal first and vertical second.

The Associations claimed that the final rule had an error in Figure 8, ''Replaceable Light Source Detection Test Setup,'' and requested that dimension ''A'' be replaced with the term ''Light Center Length.'' The Associations also requested that Figure 14 be changed. They stated that the material specification for the ''Disc. arm Brace & Clamp'' should appear as ''SAE–AA–6061 T6 or equiv,'' and the ''Coil Spring and Level Clip'' should appear as ''Spring Steel SAE 1858 –Cadmium Plate.'' Also, they stated that in Figure 14, ''5.00 Bubble movement'' should be replaced by ''5.88 Bubble movement'' and the screw ''Typ. #18'' should be ''Typ. #10.'' Finally, in Figure 14, the Associations suggested that the dimension of ''100.33'' should instead be ''188.33.''

C. Claims of Substantive Amendment

Several of the petitions claimed that during the rewrite process the agency created new substantive requirements of FMVSS No. 108 when the agency incorporated SAE standards that petitioners claim were not fully incorporated or failed to accurately transpose the requirements of third party standards.

Valeo stated that paragraph S6.1.1.4 ''would prohibit daytime running lights (DRLs) in combination with parking lights.'' Valeo maintained that the existing regulatory text allowed DRLs to be incorporated with parking lamps and urged the agency to retain the existing provision. Valeo referenced paragraph S5.5.11(a) of the current standard, which states that any pair of lamps other than parking lamps or fog lamps may be wired as DRLs. Valeo claimed that the fact that parking lights cannot be used as DRLs is evident because parking lamps would not meet the photometric requirements of DRLs. Valeo claimed that there is no way to reconcile Table 1 of SAE J222 (DEC 1970), *Parking Lamps,* with the minimum requirement of 500 candela at point Horizontal-Vertical of the beam pattern required in the regulation text. Valeo pointed out that many vehicles currently use front turn signals that are optically combined with parking lamps as DRLs. Valeo requested that the agency clarify the wording of paragraph S6.1.1.4 to disallow a DRL consisting of the parking lamp alone, while allowing a DRL that is optically combined with the parking lamp.

Calcoast requested a modification to paragraph S6.1.3.2 to clarify the performance requirements for multiple lighted section lamps. This paragraph states that ''when multiple lamp arrangements or multiple compartment rear turn signal lamps, stop lamps, or taillamps are used, with only a portion of the compartments or lamps installed on a rigid part of the vehicle, that portion must meet at least the photometric requirements for the applicable single compartment lamp.'' Calcoast stated that it is concerned that this language could be interpreted as allowing a multiple lighted section lamp that is part of a multiple lamp arrangement, such as a light-emitting diode (LED) lamp, that is mounted on the fixed portion of the vehicle to comply only with the single lighted section rules and not the multiple lighted section rules. Calcoast asserted that this statement implies that when a multiple lamp arrangement is used, there is no need to confirm that the multiple lamp arrangement meets all requirements for multiple compartment lamps. Calcoast suggested that the text state that the lighting system must comply with all the relevant rules no matter what position the moveable parts have been placed in.

Koito requested that paragraph S6.1.3.2 replace the phrase ''rigid part of the vehicle'' with the term ''fixed body panel.'' Koito noted that the term ''rigid part of the vehicle'' was correctly used in paragraph S6.1.3.1, however, it stated that it appears the term ''fixed body panel'' reflects the intent of the July 7, 2000 letter of interpretation to Gary King [5] which states ''body mounted lamps (rear turn signal, stop, or tail lamps) are the ones that must be designed to comply with FMVSS [No.] 108.''

Harley-Davidson requested that paragraph S6.2.3 be revised to clarify that the headlamp ornamentation prohibition in paragraph S6.2.3.1 does not apply to motorcycles. Harley-Davidson noted that the provision of FMVSS No. 108 prohibiting headlamp ornamentation is contained in paragraph S7.8.5 of the current standard, a paragraph Harley-Davidson claimed does not apply to motorcycles. Harley-Davidson referenced a December 6, 1999 interpretation letter to Piaggio & C.S.p.A [6] and a September 29, 2000 letter to Carter Engineering [7] to support its view on these issues.

AAM requested that the markings requirements of a sealed beam headlamp remove the term ''molded'' in paragraph S6.5.3.3.1. AAM argued that the text of the currently applicable version of FMVSS No. 108 did not require the marking to be molded into the lens.

Ford and AAM requested that the hazard warning pilot indicator requirement be deleted from paragraph S6.6.2. They claimed that the current version of FMVSS No. 108 does not require a hazard pilot indicator light. They maintained that although SAE J910 (JAN 1966), *Hazard Warning Signal Switch,* incorporated by reference in the existing standard, recommends a pilot indicator, this provision was not directly incorporated into the currently applicable version of FMVSS No. 108. They argued that their view is supported by the explicit requirement in the existing regulation for a turn signal indicator lamp. They claimed that since a turn signal pilot indicator was specifically indentified in the regulatory text of FMVSS No. 108, not all the requirements of the referenced SAE standard were included in FMVSS No. 108. They maintained that the requirement for a hazard warning pilot indicator was one of the excluded requirements.

Both the Associations and Ford requested changes to paragraph S6.6.3, which specifies the orientation of the license plate holder. Ford requested that the paragraph be deleted, claiming that the rear license plate holder is not a lamp, reflective device, or piece of associated equipment and is not separately listed as an item in the Table I or Table III of the current rule, and therefore, is not regulated by FMVSS No. 108. Harley-Davidson suggested that this requirement does not apply to motorcycles. Harley-Davidson stated that paragraph S6.1.3.3 of the referenced SAE document SAE J587 (OCT 81), *License Plate Illumination Devices,* excludes motorcycles from that provision. Harley-Davidson also stated that the existing incorporation by reference only applied to the lamps, and not to the license plate holder.

The Associations and Ford requested a change to requirements for turn signal photometric multipliers contained in paragraphs S7.1.1.10.1 through S7.1.1.10.4. The Associations asserted that the currently applicable version of FMVSS No. 108 does not make any distinction between reflector-based, and non-reflector-based optics when calculating the turn signal spacing to other lamps. They requested that paragraphs S7.1.1.10.1 through S7.1.1.10.3 be replaced by the paragraph S5.3.1.7 of the current standard, which contains the currently applicable requirements for turn signal photometric multipliers. Ford referenced the preamble to a previous agency NPRM [8] incorporating an SAE standard on turn signals to support its claim that the graduated turn signal intensity requirements for turn signals located near auxiliary lamps in paragraph S7.1.1.10.4 were not included in the text of the currently applicable version of FMVSS No. 108. Ford requested that paragraphs S7.1.1.10.2, S7.1.1.10.3, S7.1.1.10.4 (b), (c), and (d) be deleted.

AAM requested that paragraph S9.3.4, which deals with turn signal pilot indicator size and color, be removed from the standard because AAM believed that the paragraph imposed new substantive requirements that were not contained in the currently applicable version of the standard. Although AAM noted that the initial requirements published on December 16, 1967 [9] did require a turn signal indicator, and specified its size and color based on requirements in SAE J588d (JUN 1966), *Turn Signal Lamps,* AAM claimed that a subsequent revision to the standard on October 31, 1970 [10] removed the size and color requirements. AAM claimed that the currently applicable version of FMVSS No. 108 only requires that the turn

[5] *http://isearch.nhtsa.gov/files/21605.ztv.html.*
[6] *http://isearch.nhtsa.gov/files/20867.ztv.html.*
[7] *http://isearch.nhtsa.gov/files/21971.ztv.html.*
[8] 53 FR 35097, (Sep. 1, 1988).
[9] 32 FR 18032, (Dec. 16, 1967).
[10] 35 FR 16840, (Oct. 31, 1970).

signal pilot indicator indicate a turn signal outage in accordance with SAE J588d (JUN 1966) and does not specify size and color requirements for the indicator.

Harley-Davidson requested clarification and confirmation that the headlamp aimability requirements of paragraph S10.18 do not apply to motorcycles. Harley-Davidson claimed that paragraph S7.8 of the currently applicable version of the standard did not require aimability for motorcycle headlamps. Harley-Davidson referenced a letter of interpretation to Piaggio & C.S.p.A dated December 6, 1999 and also a letter to Carter Engineering dated September 29, 2000 to support its argument.

The Associations, Koito, and Calcoast requested that the agency amend paragraph S10.18.9.1.5.1, which specifies the distance at which the cutoff parameter must be measured, to allow measurement from distances greater than 10 m. Paragraph S10.18.9.1.5.1 requires that the cut off parameter be measured at a distance of 10 m with a 10 mm diameter photosensor. The Associations recommended deleting the last sentence of paragraph S10.18.9.1.5.1, or stating that 10 m is the minimum distance allowable for measuring the cutoff parameter. Koito recommended allowing a measuring distance of 18.3 m or more for measuring the cutoff parameter. Calcoast requested that the agency permit cutoff measurements at both 10 m and 25 m. All petitioners agreed that the diameter of the photosensor should appropriately correspond to the measuring distance.

Nissan requested that the inward force test specified in paragraph S14.6.12 be excluded for vehicle headlamp aiming device (VHAD) and visually-optically aimable (VOA) lamps. Nissan stated that the text of the currently applicable version of FMVSS No. 108 does not require VHAD and VOA lamps to conform to this test. Nissan also stated that the test requires an aiming plane, typically found only on externally aimed systems. Finally, Nissan claimed that the test itself is intended to assure that an externally aimable headlamp system can withstand the normal force applied to seat the suction cup onto the lens when affixing the mechanical aiming device.

The Associations and Grote petitioned the agency to add language to allow stop and turn signal lamps designed for use on vehicles 2032 mm or more in overall width, that meet the one lighted section photometric values, to be used on narrow vehicles. They claimed that SAE J1395 (APR 1985), *Front and Rear Turn Signals for Use of Motor Vehicles 2032 mm or More in Overall Width,* and SAE J1398 (MAY 1985) expressly allow this. To support this position the Associations cited an August 22, 1990 interpretation letter from the agency to Hella [11] which stated:

> Beginning December 1, 1990, Standard No. 108 will specify two different standards for turn signal lamps. If the lamp is intended for use on multipurpose passenger vehicles, trucks, buses, and trailers whose overall width is 80 inches or more, it must be designed to conform to the SAE Standard J1395 * * *, ''Turn Signal Lamps for Use on Motor Vehicles 2032 mm or More in Overall Width,'' [(APR 1985)]. SAE J1395 also provides that these lamps may be used on vehicles less than this width, except for passenger cars. If a motor vehicle is not equipped with a turn signal lamp designed to conform to SAE J1395, it must be equipped with a turn signal lamp designed to conform to SAE standard J588 * * *, ''Turn Signal Lamps for Use on Motor Vehicles Less Than 2032 mm in Overall Width,'' [(NOV 1984)].

Finally, the Associations stated that a denial of this petition will have a significant cost to the market segment.

Harley-Davidson requested that the minimum Effective Luminous Lens Area requirement for multiple compartment motorcycle stop lamps be added to Table IV–a. Harley-Davidson suggested this value should be 2,200 square mm. Harley-Davidson maintained that the current version of FMVSS No. 108 permits multiple compartment lamps or multiple lamps on motorcycles if the effective projected luminous lens area of each compartment is 2,200 square mm. Harley-Davidson states that the agency confirmed this position in a April 21, 1997 letter of interpretation to Stanley Electric.[12]

Nissan asked that the legacy visibility wording be changed for the turn, stop, and tail lamps in Table V–d. Nissan claimed that Table V–d uses different language than the SAE sub-referenced standard for these lamps on both narrow and wide vehicles. AAM requested that footnote 1 and footnote 4 be removed from Table VIII, *Stop Lamp Photometry Requirements.* AAM maintained that both of these footnotes contain requirements not previously included in FMVSS No. 108.

Nissan requested that the agency reconsider its decision not to amend the footnotes to the photometric tables for required signal lamps in response to comments received by the agency on the NPRM. Nissan stated that the footnotes to the photometric tables could be amended to provide greater clarity to the requirements of the standard without creating any substantive changes.

In Table XIX, the Associations requested that the lower beam zone defined by the corner point 10U, 90U, 90L, 90R be modified to 10U, 90U, 45L, 45R. Valeo suggested modifying Table XIX(a)(b), and (c) by modifying the first row range from 10U to 90U, 90L to 90R to only state 10U to 90U, eliminating the horizontal angles. Both Valeo and the Associations claimed that the horizontal range was not defined in the currently applicable standard.

D. Amendments to Improve Clarity

Commenters requested the following changes to clarify certain provisions of the standard and to further improve readability. Nissan requested that paragraph S6.1.3.4.2 be revised to read: ''Accessibility. Each high mounted stop lamp must provide access for convenient replacement of the bulb without a tool specifically designed for that purpose.'' Nissan stated that this wording would incorporate a February 12, 1998 interpretation letter to Ford Motor Company [13] to clarify the meaning of ''special tool.''

Harley-Davidson requested that the agency clarify that dual motorcycle head lamps may be horizontally-mounted. Harley-Davidson stated that paragraph S6.1.3.5.1.3 of the rewrite seems to prohibit horizontally-mounted dual motorcycle headlamps. Harley-Davidson claimed that paragraph S7.9.6.2(c) of the current standard permits dual horizontal mounting. Harley-Davidson further claimed that paragraph S10.17.1.3.1 of the rewrite of FMVSS No. 108 continues to permit dual horizontally-mounted motorcycle headlamps.

Koito requested that the agency clarify paragraph S7.3.12.1, which deals with the ratio requirements between stop and tail lamp intensities. Koito requested that this paragraph be modified to say: ''When a taillamp on a multipurpose passenger vehicle, truck, trailer, or bus of 2,032 mm or more in overall width, is combined with a stop lamp, the luminous intensity of the stop lamps at each identified test point must be * * *'' Koito claimed that this will clarify that the ratio requirement is always applied between stop and tail lamp intensities on wide vehicles and that wide vehicles do not have the 560 mm and 410 mm classification used for narrow vehicles.

Nissan recommended adding a subject to the sentence in paragraph S8.2.1.5 so that the text reads: ''Application location. Conspicuity systems need not

[11] *http://isearch.nhtsa.gov/aiam/aiam4773.html.*

[12] *http://isearch.nhtsa.gov/files/14307.ztv.html.*

[13] *http://isearch.nhtsa.gov/files/16788.ztv.html.*

be * * *'' Nissan stated that this is consistent with the other paragraphs of that section.

Nissan requested that paragraph S10.1.2 be modified to eliminate the duplicate requirements for motorcycle headlamp systems. Nissan recommended modifying that paragraph to read: ''Each motorcycle must be equipped with a headlighting system conforming to S10.17.'' This modification would eliminate the allowance of a one half headlighting system within paragraph S10.1.2, because that allowance is set forth within paragraph S10.17, thereby removing redundant requirements.

Koito recommended clarifying the requirements for four headlamp systems by modifying paragraph S10.15.1 to read as follows: ''A replaceable bulb headlighting system must consist of either two lamps, each containing either one or two replaceable light sources, or four lamps, each containing a single replaceable light source as specified for the application system in Table II–d. A system must provide in total no more than two upper beams and two lower beams and must incorporate not more than two replaceable light sources in each headlamp.'' Koito claimed that its recommended text will limit the number of light sources in each headlamp of a four headlamp system. Koito claimed, that as currently worded, the final rule will allow two replaceable light sources in each headlamp of a four headlamp system, which it further claimed is not consistent with the intent of the original requirement.

Toyota and Koito both requested a modification to paragraph S10.15.5 which deals with additional light sources in a replaceable bulb headlighting system. They requested the term ''replaceable light sources'' be replaced with the term ''light sources'' in this paragraph. They claimed that this expression should be the same as is used in paragraph S10.14.5 for integral beam headlighting systems. Toyota also recommended including the phrase ''and are replaceable'' to the end of that paragraph. Toyota also noted that this change was discussed in the preamble to the final rule, but was not properly included in the final rule text.

Nissan requested that paragraph S10.18.9.5, which deals with visual/optical aiming headlamp photometry, be removed. Nissan claimed that this entire paragraph is redundant with paragraphs S10.13.3, S10.14.6, S10.15.6, S10.16.2, and Table II. Nissan stated that the requirements should only be stated once in the standard.

Nissan requested that paragraph S13.3, which deals with replaceable headlamp lens markings, be relocated within paragraph S6.5. Nissan stated that the DOT marking requirement in that paragraph is redundant with paragraph S6.5.1. Nissan stated the remaining marking requirements of paragraph S13.3 should be added to a new paragraph enumerated as paragraph S6.5.3.6.

The Associations and SABIC requested a modification to paragraph S14.1.2, which deals with plastic optical materials. The Associations requested that the paragraph be modified to state: ''Plastic optical materials. All plastic material used for optical parts such as lenses and reflex reflectors on lamps, or reflective devices required or allowed by this standard must conform to the material test requirements of S14.4.2, unless they are conspicuity treatments that are in accordance with S8.2.1 or S8.2.2.'' SABIC requested that the paragraph be modified as follows: ''Plastic optical material. All plastic materials used for transparent optical parts such as lenses and reflex reflectors on lamps or reflective devices required or allowed by this standard must conform to the material test requirements of S14.4.2.'' Both petitioners pointed out the distinction between reflex reflectors and reflectors. The Associations further stated that conspicuity treatments were not part of the standard when this original language was placed in the standard.

Nissan requested a modification to paragraph S14.2.4.3, which specifies bulb requirements for DRL photometry testing. Nissan requested that this paragraph be revised to read: ''Bulb requirements of paragraph S14.2.1.6 apply to DRL photometry, except for the need to operate at the rated mean spherical candela.'' Nissan claimed that the text of the final rule, which states that bulbs are to be operated at their rated mean spherical candela, creates a conflict with the requirement in paragraph S14.2.4.1, which requires a fixed 12.8V input be applied to the modules or electrical control units during testing. Nissan stated that it may not be possible to achieve a bulb's mean rated spherical candela at 12.8V.

Koito asked for a clarification of the requirement in paragraph S14.4.2.1.3, which specifies testing for plastic optical materials. Koito noted that test sample thicknesses are stated to be 1.6 mm, 2.3 mm, 3.2 mm, and 6.4 mm. Koito also noted that the color requirement in paragraph S14.4.2.2.4.5 specifies that after completion of the outdoor exposure test, all materials must conform to the standard's color test in the range of thickness stated by the manufacturer. Koito asked if a material thickness of 7 mm can be certified if it was once tested in the four thicknesses stated above, and found satisfactory.

Nissan requested that some information contained in the text of the standard be incorporated into a new table. Nissan requested that the tabulated text in paragraph S14.9.3.11.2.3.1, *Operating Limits,* be titled ''Table XXI'' and relocated with the other tables instead of being located in its current position.

AAM further requested that Table I–a be broken into two tables that separate the requirements of narrow vehicles from those for wide vehicles.

AAM stated that the requirements for DRLs should not be located in Table I–a because the title of the table *Required Lamps and Reflective Devices* may confuse users trying to locate the requirements. AAM stated that Table I–a should contain a pointing statement to allow the user of the standard to locate the requirements for DRLs elsewhere.

Koito requested that the activation specifications for a high mounted stop lamp in Table I–a be changed to ''Steady burning. Must only be activated upon application of the service brakes or may be activated by a device designed to retard the motion of the vehicle.'' Koito claimed this change is necessary because, in its view, ''a high mounted stop lamp is optional on the activation of a device designed to retard the motion of the vehicle.''

AAM requested that the titles of Tables I–a, I–b, and I–c be amended to include the vehicles to which the tables apply. AAM stated that all of the tables having the same title, *Required Lamps and Reflective Devices,* does not improve the clarity of the standard.

The Associations, Grote, and Valeo requested that the maximum allowable photometric intensity in Table XII for backup lamps on vehicles equipped with a single back up lamp be changed from 300 to 300/600. They further requested the addition of a footnote that states; ''the value before the slash (300 cd) applies to each lamp in a multiple lamp system; the value after the slash (600 cd) applies to a single lamp system.'' The petitioners stated that FMVSS No. 108 requires backup lamps on vehicles equipped with a single backup lamp to be tested at twice the candela requirements. Industry believes this applies to maximum as well as minimum values.

Nissan suggested removing the term ''test points'' in footnote 1 of Table XIX, to clarify that all points with the specified boundary must meet the photometric requirements listed in the table. Finally, Nissan requested that all

the tables be presented in a complete manner without splitting a table across multiple pages.

IV. Agency Analysis and Response

A. Definitions

The agency has considered the requests from Nissan and AAM to modify the definition of clearance, identification, and side marker lamps. For each of these lamps, the agency has verified that the definitions were successfully translated from the applicable SAE document referenced in the currently applicable version of the standard. While the agency believes that the modifications requested by Nissan have the potential to further simplify the definitions of these lamps, modifying the definitions may change the meaning of these terms. The agency believes that it would be better to retain sporadic redundancies in the standard than to risk a substantive modification by changing the definitions of these lamps. Further, such a modification would be outside the scope of the administrative rewrite of the standard. Therefore, the agency is denying these requests.

The agency is denying the request by the Associations, Grote, and Valeo to add a definition for the term ''headlamp system.'' Since this definition did not exist in the existing regulation text, nor in the documents incorporated by reference, the agency considers this addition to be a substantive change not within the scope of the administrative rewrite of the standard.

Nissan requested that the agency incorporate a November 3, 1988 interpretation letter to Al Cunningham in order to clarify the definition of a ''multiple compartment lamp.'' The final rule definition of a multiple compartment lamp is a direct carry-over from text in paragraph S4 of the currently applicable version of FMVSS No. 108. In the NPRM, the agency invited input from interested parties regarding additional interpretations that should be considered for inclusion in the final rule, beyond those proposed by the agency. Nissan's petition was not submitted at that time. It is the agency's intention to take caution not to create a substantive change within this technical correction and partial response to petitions for reconsideration, therefore, we are denying this request by Nissan.

The agency is granting the Associations' request to add a definition of a ''combination headlamp.'' They noted that other lamp types regulated within this standard are defined in the definition section, however, a combination headlamp is not defined except in Table II–b. The Associations suggested adding a definition that uses the system composition column descriptions from Table II–b in order to construct the following definition: ''Combination Headlamp System: For a two lamp system, a combination of two different headlamps chosen from: Type F, an integral beam headlamp, or a replaceable bulb headlamp and for a four lamp system, any combination of four different headlamps chosen from: Type F, an integral beam headlamp, or a replaceable bulb headlamp.'' This description is consistent with the existing text of the standard found in paragraphs S7.6.2, and S7.6.3 of the final rule. In order to maintain consistency within the standard, the agency will define a combination headlamp as opposed to a combination headlamp system. The definition is as follows: ''Combination headlamp means a headlamp that is a combination of two different headlamp types chosen from a type F sealed beam headlamp, an integral beam headlamp, or a replaceable bulb headlamp.'' The currently applicable standard does not include a stated definition for the term ''combination headlamp,'' however, the agency agrees that such a definition—limited to a combination headlamp rather than to such a system—does not impose any substantive change to the standard, and provides a more straightforward presentation of the requirements.

The Association's request to define ''combination headlamp'' differs from the request in the petitions from Grote and Valeo to create a definition of ''headlamp system.'' The definition proposed by the Associations does not create new wording within the standard, it uses a description already contained in the standard, and places that description into the definition section. The definition of a ''combination headlamp'' is therefore added within paragraph S4 as requested by the Associations.

The agency is denying Grote and the Associations' request to use the term ''lighted sections'' when referring to lamp sections or compartments. It has been the agency's intent during the rewrite of FMVSS No. 108 not to change the language of the current standard or incorporated documents so as to avoid making unintended changes to the standard. Adopting the term ''lighted sections'' in place of ''lamp sections'' or ''compartments'' would alter the standard in a manner that is inconsistent with the goals of the rewrite.

B. Technical Amendments

The agency has considered and incorporated corrections in response to the requests to remedy typographical errors, or formatting errors found in the final rule. The agency has declined to make several technical corrections that will be discussed in greater detail in this section.

The agency agrees with Nissan that the ASTM C 150–56 specification is missing from paragraph S5. This specification has been added.

The agency has corrected the grammatical error identified by Nissan in paragraph S6.4.4. Paragraph S6.4.4 has been modified to read as published in this final rule.

The agency is denying the request by AAM to move paragraph S6.5.1, which contains the DOT marking requirements for headlamps. While we do note that other headlamp marking requirements are located in paragraphs S6.5.3, priority within organization will be maintained by keeping the three paragraphs, S6.5.1 DOT markings for headlamps, S6.5.1.1 which deals with DOT conspicuity markings, and S6.5.1.2 which describes the general allowance of placing the DOT marking on lamps other than headlamps, together. We believe it would be inappropriate to place the contents of paragraph S6.5.1.1 and paragraph S6.5.1.2 within the paragraphs of S6.5.3, because these paragraphs are not headlamp specific. Therefore, we are maintaining the current paragraph structure.

The paragraph that was mistakenly numbered S6.5.3, *Trademark,* has been corrected to S6.5.3.1, *Trademark.* Paragraph S6.5.3 no longer appears twice.

The agency is granting the AAM request that the format of the text ''SEALED BEAM,'' located in paragraph S6.5.3.3.1, be modified to lowercase letters that match the same text located in Table III. The text for paragraph S6.5.3.3.1 was derived from paragraph 2.1.1 in SAE 1383 APR 1985, *Performance Requirements for Replacement Bulb Motor Vehicle Headlamps.* In the SAE document the text is all lower case, appearing as ''sealed beam.'' The agency agrees that the letter case of the word ''sealed beam'' should be the same in Table III as in paragraph S6.5.3.3.1, therefore, both instances have been changed to the lowercase presentation ''sealed beam.'' The agency does note that in this particular case, we do not feel the actual presentation of lower case or upper case notation of the words ''sealed beam'' is vital to the public's use of the standard,

or to the agency's ability to enforce the existence of the marking.

In response to AAM's request to change the plural term ''compartments'' to the singular term ''compartment,'' the agency has modified paragraph S7.1.1.11. The agency agrees that the singular form of the term is more appropriate. It now states ''S7.1.1.11 Multiple compartment lamps and multiple lamps.''

Based on AAM's request, paragraph S7.1.1.11.1 has been modified to read: ''A multiple compartment lamp or multiple lamps may be used to meet the photometric requirements of a front turn signal lamp *provided the requirements of S6.1.3.2 are met.*'' The agency believes the additional reference to paragraph S6.1.3.2 makes the standard more usable.

As Nissan requested, paragraph S7.1.1.12.4 has been corrected to state: ''* * * the clearance lamp is located below the horizontal and within an area generated by a 1.0 degree radius around * * *'' This modification corrects the missing word ''degree.''

As AAM requested, the agency has changed the marking requirements for lamps other than headlamps to point to the specific subparagraph within paragraph 6.5. The agency has changed the pointing statement in the following paragraphs to provide the specificity requested by AAM: S7.1.1.9, S7.1.2.9, S7.2.9, S7.3.9, S7.4.9, S7.5.9, S7.6.9, S7.7.9, S7.8.9, S7.9.9, S7.11.9 and S8.1.9. The pointing statement for these paragraphs now points to paragraph S6.5.1.2 instead of paragraph S6.5. The agency has not changed the pointing statement in paragraph S7.10.9, which deals with DRL markings, because more than one subparagraph within S6.5 may apply to DRL markings. We believe these modified references will allow the users of the standard to find the paragraph of interest more efficiently.

As AAM requested, the agency has removed the references to Tables I–a, I–b, and I–c from paragraph S7.7.4 which now reads ''No requirement.'' The agency agrees that this construction is more usable, compared to referencing Tables I–a, I–b, and I–c which all state ''No requirement.''

The agency has granted the Associations' request that the paragraph numeration be corrected under paragraph S7.9.14. The structure has been corrected to S7.9.14.1 and S7.9.14.2.

The agency has granted Nissan's request to change paragraph S14.2.1.5.2 to read ''Luminous intensity measurements of multiple compartment lamps or multiple lamp arrangements are made either by:'' in order to maintain consistent language throughout the sentence.

We have modified Paragraph S14.3.1, as requested by Toyota, in order to correctly abbreviate the unit ''inch.'' The abbreviation now includes a period after the letters in.

We have granted GE and the Associations' request to modify paragraph S14.6.9.1.1 in order to correct a temperature conversion error. Paragraph S14.6.9.1.1 now lists 80° C as the metric equivalent of 176° F.

The agency has revised all tables to place requirements in the correct column, remove extraneous billing codes, correct the format of table headings and subheadings, and correct pointing statements as requested by petitioners.

Nissan requested that the agency add English units of measurement to the *Mounting Height* column for lower and upper beam headlamps in Table I–a. AAM also requested that the agency add English units of measurement to Tables I–a, I–b, and I–c. The agency notes that the mounting height requirements for upper and lower beam head lamps are listed in both metric and English units in the currently applicable version of FMVSS No. 108, therefore, adding the English units of measurement does not create a substantive change to the standard. The agency grants Nissan's request and has added the English units of measurement to the *Mounting Height* column of Table I–a for both upper and lower beam headlamps. The agency is also adding English units of measurement to the *Mounting Height* column of Table I–c for both upper and lower beams. The agency is denying AAM's request to list all measurements in Tables I–a, I–b, and I–c in both English and metric units as the measurements are not listed in this manner in the currently applicable version of FMVSS No. 108. As stated in both the NPRM and the preamble to the final rule, the agency is attempting to refrain from making any substantive change to the requirements of the standard during the rewrite process. The agency believes that in the process of converting measurements from metric to English or vice versa it is possible to create a substantive change to the requirements of the standard.

We decline to adopt AAM's proposal to add the word ''Optional'' to the *Markings* column of Table III for *Lamps (Other Than Headlamps), Reflective Devices, and Associated Equipment* because paragraph S6.5.1.2 referenced in that table adequately conveys the installation requirement without redundant wording inside the table. This request is therefore denied.

AAM noted that Table III contained an incorrect reference paragraph for the marking requirements for replaceable bulb headlamps. The agency has changed the reference for replaceable bulb headlamp marking requirements to point to paragraph S6.5.3.4.

We decline to incorporate AAM's request to add marking requirements for replacement lens headlamps to Table III because paragraph S5.8.11 of the existing standard contains requirements for instructions and a replacement seal, neither of which the agency considers appropriate to list among the marking requirements in Table III.

The agency is granting Nissan's request to provide the required visibility measurements in both English and metric units for Table V–a. We have also corrected the alignment of lighting device functions to their corner points in Table V–b.

The agency is granting Nissan's request to replace the word ''zone'' with the word ''group'' in footnote 2 of Tables VIII, XIV, and XV and footnote 4 of Table XII. Nissan also requested that the agency amend footnote 2 of Table XVI to replace the word ''zone'' with the word ''group.'' As neither Tables XVI–a, XVI–b, or XVI–c have a footnote 2, the agency is not in a position to grant this request.

AAM requested that the agency amend footnote 6 of Table IX to clarify that the minimum photometric intensity ratio for stop lamps combined with taillamps on wide vehicles for the H–5L test point was 3:1 not 5:1. The agency agrees that the photometric ratio for the H–5L test point for wide vehicles is 3:1. The agency is granting AAM's request by amending footnote 6 of Table IX to read: ''Values followed by a slash (/) apply only to lamps installed on multipurpose passenger vehicles, trucks, trailers, and buses of 2032 mm or more in overall width.''

The agency has revised Table XV so that the test points are listed as horizontal first and vertical second as requested by Nissan.

The Associations requested that Figure 8 measurement ''A'' be replaced with the term ''Light Center Length.'' This measurement and label ''A'' were directly translated from the text of Figure 8 in the currently applicable version of Standard No. 108. In the currently applicable version of Standard No. 108, the label ''A'' was used, furthermore, this distance is referenced in paragraphs S14.7.1.1.1, S14.7.1.1.2, and S14.7.1.1.3 as distance ''A''. Therefore, the agency is denying this request in order to avoid a potentially substantive change by introducing a new term into Figure 8.

The Associations also requested changes to Figure 14 that include changing the ''Disc. Arm and Brace Clamp'' material from SAE–AA–6961 to SAE–AA–6061. The agency agrees that this was listed incorrectly and has modified Figure 14 accordingly. They also requested that the ''Coil Spring and Level clip'' material be changed to ''Spring Steel SAE 1858—Cadmium Plate.'' The agency does not agree as ''Spring Steel SAE 1050'' is called out in the currently applicable version of this standard. Therefore, we are denying this request. Also, the agency has corrected the value of the bubble movement to 5.08 and changed the screw number to ''TYP #10'' in Figure 14 because these changes are consistent with the currently applicable version of the standard. The dimension of 100.33 was correctly translated from the currently applicable version of the standard so the agency is denying the Associations' request to amend that value to 188.33.

GE noted several corrections in the sealed beam drawings that were moved into the part 564 docket. Corrections to these drawings will be made, and the docket will be updated.

C. Claims of Substantive Amendment

Several of the petitioners claimed that the agency made substantive changes to the requirements of the standard during the rewrite process or requested that the agency clarify portions of the text to ensure that the rewrite did not impose any new requirements. The agency has made all efforts not to impose any new burdens on regulated parties or change the requirements of the standard in any way through the rewrite process. It is the agency's position that the requirements of FMVSS No. 108 have not changed as a result of the rewrite.

In consideration of Valeo's request to change the wording of paragraph S6.1.1.4 in order to make it clear that a DRL may be optically combined with a parking lamp in the final rule, the agency attempted to translate the text of the currently applicable version of FMVSS No. 108 without creating substantive changes. Paragraph S6.1.1.4 is derived from paragraph S5.5.11(a) of the existing standard.

The final rule split paragraph S5.5.11(a) into various parts without changing the activation requirements of DRLs. Some of the text was included in paragraph S6.1.1.4 of the final rule.

Table I–a contains the remaining translation of the text of the currently applicable version of FMVSS No. 108 which states that the activation should be ''Steady burning. Automatically activated as determined by the vehicle manufacturer and automatically deactivated when the headlamp control is in any on position.''

In order to avoid a substantive change to the requirements of FMVSS No. 108, the agency does not believe it is appropriate to incorporate any additional letters of interpretation at this time regarding the permissibility of optically combining parking lamps or fog lamps with DRLs. The agency, however, does understand that the final rule text may provide less clarity than the existing standard. Therefore, in order to more strictly adhere to the language in the existing standard, we are modifying paragraph S6.1.1.4 to retain the language allowing any pair of lamps except parking lamps or fog lamps to be wired as DRLs at the option of the manufacturer.

This modification does create a limited amount of redundant text contained in both paragraph S6.1.1.4 and Table I–a, however, the agency considers this small level of redundancy manageable and preferable, in this situation, in order to avoid unintended confusion due to a change in the language in the final rule.

The agency has considered Calcoast's request to modify paragraph S6.1.3.2, to clarify the requirements of multiple lamp arrangements and multiple compartment rear turns signal, stop lamp, and taillamp combinations. Calcoast stated that this paragraph could be interpreted such as to allow a multiple lighted section lamp that is part of a multiple lamp arrangement and mounted on the fixed portion of the vehicle to meet only the single compartment lamp requirements. Calcoast indicated this situation might occur particularly in a lamp utilizing LED's as the sources. The section of this paragraph under consideration is the phrase ''that portion must meet at least the photometric requirements for the applicable single compartment lamp.''

In developing the NPRM, and ultimately the final rule, the agency relied on a July 12, 2000 interpretation letter to Gary King. The interpretation letter, however, does not specify that a multiple compartment lamp need only meet the single compartment requirements in the multiple lamp arrangement described in that interpretation. Accordingly, the agency believes that paragraph S6.1.3.2 of the final rule could be misinterpreted. Therefore, in response to Calcoast's request, the paragraph has thus been modified to state: ''S6.1.3.2 When multiple lamp arrangements for rear turn signal lamps, stop lamps, or taillamps are used, with only a portion of the lamps installed on a *fixed* part of the vehicle, the lamp or lamps that are installed to the *non-fixed* part of the vehicle will be considered auxiliary lamps.'' The agency believes this modified paragraph adheres to the guidance provided in the King interpretation letter and provides less opportunity for misinterpretation. The revised paragraph S6.1.3.2 also includes the request from Koito to replace the term ''rigid'' with the term ''fixed'' as the agency agrees the term ''fixed'' more appropriately describes the situation discussed in the interpretation letter to Mr. King.

The agency agrees with Harley-Davidson's claim that paragraph S6.2.3.1, which prohibits any styling, ornament or other feature on the front of the headlamp lens when the lamp is activated, does not apply to motorcycles. This paragraph was derived from the existing regulatory text in paragraph S7.8.5, which contains both the prohibition on styling and ornamentation on headlamp lenses and the requirement the headlamps have aiming devices. As Harley-Davidson pointed out, two letters of interpretation, a December 6, 1999 letter to Piaggio & C.S.p.A, and a September 29, 2000 letter to Carter Engineering, confirm that FMVSS No. 108 does not require motorcycle headlamps to have aiming mechanisms. Within the letter to Carter Engineering, NHTSA stated: ''The aiming mechanism requirements of Standard No. 108 are imposed by S7.8, and as indicated previously, we do not intend S7.8.2 to apply to motorcycle headlamps. We intend that the paragraphs of S7.9 Motorcycles and their referenced materials cover motorcycle headlamps.'' This ornament prohibition was first added to the standard in 1989 [14] and at that time was within the same paragraph as aimability requirements. Therefore, we have modified paragraph S6.2.3.1 as follows: ''When activated in the steady burning state, headlamps *(excluding headlamps mounted on motorcycles)* must not have any styling ornament or other feature, such as a translucent cover or grill, in front of the lens.''

AAM requested a change to paragraph S6.5.3.3.1 so that the marking requirements for sealed beam headlamps need not be molded into the lens. We believe that AAM is incorrect in its assertion that the current standard does not require that marking be molded into the lens of sealed beam headlamps. The marking requirements from paragraph S6.5.3.3.1 were derived from current FMVSS No. 108 paragraph S7.3.1 which references SAE J1383

[14] 54 FR 20079, (May 9, 1989).

(APR 1985), *Performance Requirements for Motor Vehicle Headlamps.* SAE J1383 (APR 1985) states, in paragraph S5.4.4, ''Headlamp lenses shall be marked with a three letter code. The marking shall be molded in the lens * * *'' Thus, the requirement that the marking of a sealed beam headlamp be molded into the lens is clearly part of the existing standard. Accordingly, the agency is maintaining the requirements contained in paragraph S6.5.3.3.1 and is denying AAM's request.

Ford and AAM requested that the hazard warning pilot indicator requirements be deleted from paragraph S6.6.2. They stated that the requirement for a hazard warning signal pilot indicator has never been contained in any previous version of FMVSS No. 108. They contended that the presence of paragraph S3.4.7 in the original version of FMVSS No. 108 published in 1967,[15] (paragraph S5.5.6 in the current version of the standard) which contained the requirements for a turn signal pilot indicator, indicates other pilot indicators were not required under the original version of the standard. They asserted that since FMVSS No. 108 specifically references a turn signal pilot indicator in the text of the standard, requirements for other indicators in SAE standards were not intended to be incorporated by reference into FMVSS No. 108.

NHTSA does not agree with AAM's and Ford's argument, a hazard warning signal pilot indicator is required by the current version of FMVSS No. 108 and SAE standards incorporated by reference. Paragraph S5.1.1 of the current standard requires that vehicles shall be equipped with the lamps, reflective devices, and associated equipment specified in Table I and Table III, and that those devices shall be designed to conform to the SAE standards or recommended practices referenced in those tables. Table I lists a vehicle hazard warning signal unit and a vehicle hazard warning signal flasher as required equipment for all vehicles wider than 80 inches, except trailers, and references SAE J910 (JAN 1966), *Hazard Warning Signal Switch,* and SAE J945 (FEB 1966), *Vehicular Hazard Warning Signal Flasher.* Table III lists a vehicle hazard warning signal operating unit and a vehicle hazard warning signal flasher as required equipment for all vehicles narrower than 80 inches, except trailers and motorcycles, and references SAE J910 (JAN 1966) and SAE J945 (FEB 1966). SAE J910 (JAN 1966) states:

> Pilot Indicator Lamps—In vehicles equipped with right- and left-hand turn signal pilot indicators, both pilots and/or a separate pilot shall flash simultaneously while the vehicle hazard operating unit is turned on. In vehicles equipped with a single turn signal pilot indicator, a separate vehicular hazard pilot indicator shall flash and the turn signal pilot may flash while the vehicular hazard operating unit is turned on. If a separate vehicular hazard pilot indicator is used, it shall emit a red color and have a minimum area equivalent to a 0.5 in. diameter circle.

Therefore, Tables I and III, in conjunction with paragraph S5.1.1 of the current standard, require that vehicles equipped with hazard warning signal switches be equipped with a hazard warning signal pilot indicator. We do not agree with the assertion by AAM and Ford that the SAE requirements incorporated by reference for hazard warning lamps do not apply because they were not restated directly in the standard, as was the case with turn signal pilot indicators. Therefore, we are denying this request and retaining the language of paragraph S6.6.2 in its entirety.

The Associations, Ford, and Harley-Davidson requested changes to paragraph S6.6.3, which specifies the orientation of the license plate holder. The agency will address the issue of the applicability of license plate holder requirements in a separate notice.

Ford requested the deletion of paragraphs S7.1.1.10.2, S7.1.1.10.3, S7.1.1.10.4(b), S7.1.1.10.4(c), and S7.1.1.10.4(d) which all deal with the measurement of, and requirements for, front turn signal lamp intensity based on the spatial relationship to any auxiliary lower beam or fog lamp. Ford stated that these requirements, which were derived from the existing standard by way of reference to SAE J588 (NOV 1984) and SAE J1395 (APR 1985), were not previously incorporated fully into the standard by reference. Ford stated that the denial of an SAE petition for rulemaking,[16] which stated, ''NHTSA reference to SAE standards is not always absolute, in that parts of standards are referenced or exceptions are made to specific requirements in SAE standards where different or more stringent performance is necessary for safety purposes,'' demonstrates that it is well and widely understood that not all requirements referenced in SAE standards are intended by the agency to be incorporated into the standard. Ford also cited the final rule preamble that incorporated SAE J588 (NOV 1984) and SAE J1395 (NOV 1984) into FMVSS No. 108. Ford quoted that discussion as stating:

> An additional difference between the new SAE turn signal specification and the ones currently contained in FMVSS No. 108 concerns intensity. If a turn signal lamp is closer than 4 inches (100 mm) to a lower beam headlamp, it must have 2.5 times the intensity otherwise required. The SAE applies the factor of 2.5 only if the turn signal is closer than 60 mm to the lower beam headlamp. NHTSA proposed retention of the current requirement. The SAE specification applies the photometric multiplier in three steps, from 60 mm to 100 mm.[17]

The final statement in that discussion concluded, ''[g]iven the advent and usage of higher intensity headlamps, there appears to be an even greater need than before to preserve the intensity ratio. NHTSA has done so by retaining the existing requirement.''

We do not agree with Ford's position. Ford's argument that NHTSA's incorporation of SAE standards is not always absolute is in reference to cases in which FMVSS No. 108 explicitly states requirements that are different than the SAE documents. In cases where NHTSA does not specifically exclude parts of SAE standards, the entire standard is incorporated by reference. In the rulemaking cited by Ford, neither within the preamble of that final rule, nor in the NPRM was there any discussion of exempting, or applying any intensity multipliers other than those appearing in the SAE document for auxiliary lamps. The key argument for the agency not to adopt the multipliers in the 1984 SAE standards deals with higher intensity headlamps and the spatial relationship of turn signals to those lamps and, thus, is inapplicable to intensity multipliers for turn signals located near auxiliary lamps. As stated in the preamble of the final rule, SAE J588 (NOV 1984) and SAE J1395 (APR 1985) contain additional photometric multiplier requirements beyond those required in paragraph S5.3.1.7 for turn signals located near auxiliary lamps.[18] It is the agency's position that the requirements in paragraph S5.3.1.7 work in conjunction with the requirements in SAE J588 (NOV 1984) and SAE J1395 (APR 1985) and do not preempt them. Therefore, the agency has not removed the paragraphs and denies Ford's requests.

The Associations claimed the text of the currently applicable version of FMVSS No. 108 did not distinguish between non-reflector light sources and reflector light sources for the purposes

[15] 32 FR 18037, (Dec. 16, 1967).

[16] 61 FR 14044, (Mar. 29, 1996).

[17] 55 FR 20158, (May 15, 1990).

[18] 72 FR 68243, (Dec. 4, 2007).

of measuring the distance between a turn signal to a headlamp, or auxiliary lamp. They claimed that paragraph S5.3.1.7 in the existing FMVSS No. 108, which states, ''on a motor vehicle on which the front turn signal lamp is less than 100 mm from the lighted edge of a lower beam headlamp, as measured from the optical center of the turn signal lamps, the multiplier applied to obtain the required minimum luminous intensities shall be 2.5'' supersedes section 5.1.5.4 of SAE J588 (NOV 1984). Therefore, the Associations requested that paragraphs S7.1.1.10.1 through S7.1.1.10.3 of the final rule be replaced with paragraph S5.3.1.7 of the currently-applicable version of FMVSS No. 108.

The agency agrees that the distance between a turn signal lamp and a lower beam headlamp should be measured from the optical center as specified in the text of the currently applicable version of FMVSS No. 108. However, the measurements between a turn signal lamp and an auxiliary lamp are incorporated from SAE J588 (NOV 1984), which included different measurement methods for turn signal lamps that incorporate reflector optics and turn signal lamps that primarily use lens optics. Considering this, paragraph S7.1.1.10.4(a) has been changed to state ''where the spacing measurement as measured from the optical center of the turn signal lamp, to the lighted edge of a lower beam headlamp is less than 100 mm, the photometric multiplier must be 2.5.'' As stated previously, SAE J588 (NOV 1984) contains requirements that are additional to those contained in paragraph S5.3.1.7 of the current standard. Therefore, we refrain from changing the method for measuring the distance between the turn signal and auxiliary lamps for determining the required photometric multiplier.

AAM claimed that the text of the currently applicable version of FMVSS No. 108 does not specify the size and color of turn signal pilot indicators and requested that paragraph S9.3.4 be removed. AAM asserted the two sentences contained within paragraph S5.5.6 of the currently applicable version of FMVSS No. 108 should be considered separately. AAM stated that the first sentence requires a vehicle equipped with a turn signal operating unit to also have an illuminated pilot indicator. Through the second sentence, the paragraph separately requires that the failure of one or more turn signal lamps to operate should be indicated according to the SAE Standard. Therefore, AAM claimed that the SAE standard recommendations for turn signal pilot indicator size and color are not requirements in FMVSS No. 108.

NHTSA finds that paragraph S5.5.6 of the current standard requires that the turn signal pilot indicator comply with all requirements for turn signal pilot indicators specified in SAE J588 (SEP 1970). Paragraph S9.3.4 of the final rule, which states, ''[i]f an indicator is located inside the vehicle it must emit a green colored light and have a minimum area equivalent to a 3⁄16 in diameter circle,'' was derived from the currently applicable version of the FMVSS No. 108 paragraph S5.5.6, which states that, ''[e]ach vehicle equipped with a turn signal operating unit shall also have an illuminated pilot indicator. Failure of one or more turn signal lamps to operate shall be indicated in accordance with SAE J588 (SEP 1970) * * *'' Furthermore, paragraph 4.5.2 of SAE J588 (SEP 1970) states that, ''if the illuminated indicator is located inside the vehicle, for example in the instrument cluster, it should emit a green colored light and have a minimum area equivalent to a 3⁄16 in. diameter circle.''

It is the view of the agency that the phrase ''[f]ailure of one or more turn signal lamps to operate shall be indicated in accordance with SAE J588 (SEP 1970),'' requires that the turn signal pilot indicator comply in all respects with SAE J588 (SEP 1970). SAE J588 (SEP 1970) contains requirements for pilot indicators to indicate that the turn signal system is off, size and color requirements for the indicator, and visibility requirements for the indicator based on driver eye position. An indicator of a size and color other than the indicator required in SAE J588 (SEP 1970) would not indicate failure of a turn signal lamp to operate in accordance with SAE J588 (1970) because the indicator would not meet the requirements laid out in that standard for size and color. It is the agency's position that this sentence requires the pilot indicator to indicate that the turn signal is out via an indicator of the size and color and at the eye location specified in the standard. Therefore, no substantive change was imposed by the final rule compared with the existing standard. Accordingly, the agency is denying this request from AAM.

Harley-Davidson requested clarification and confirmation that the headlamp aimability requirements of S10.18 do not apply to motorcycles. As discussed in Harley-Davidson's request to clarify the applicability of the headlamp ornamentation prohibition to motorcycles, two letters of interpretation, a December, 6, 1999 letter to Piaggio & C.S.p.A, and a September 9, 2000 letter to Carter Engineering, confirm that this standard does not require motorcycle headlamps to have aiming mechanisms. Within the letter to Mr. Carter, NHTSA stated, ''The aiming mechanism requirements of Standard No. 108 are imposed by S7.8, and as I indicated previously, we do not intend S7.8.2 to apply to motorcycle headlamps. We intend the paragraphs of S7.9 *Motorcycles* and their referenced materials to cover motorcycle headlamps.'' Accordingly, paragraph S10.18 has been modified to state: ''Headlamp aimability performance requirements (*except for motorcycles*).'' Paragraph S10.2 is modified to state ''Reserved.'' The agency does note that in paragraph S14.2.5.5, *Headlamp photometry measurements,* the procedure does require that the headlamp be aimed during testing. Therefore, although the performance requirements of paragraph S10.18 do not apply to motorcycles, they must have the ability to meet the applicable photometric requirements using the testing procedure described in paragraph S14.2.5.

The Associations, Koito and Calcoast requested that the agency amend paragraph S10.18.9.1.5.1, which required that the cutoff parameter for headlamps be measured from a distance of 10 m from a photosensor with a 10 mm diameter because these requirements were not contained in the current version of the standard. The agency provided the measurement distance of 10 m from the photosensor having a diameter of 10 mm for measuring the cutoff parameter as guidance in a letter of interpretation to Tilman Spingler on April 6, 2000.[19] In the agency guidance letter to Mr. Spingler, the agency stated that it intended to incorporate the guidance provided in the letter into FMVSS No. 108 during the next rulemaking involving the standard. The NPRM to this final rule stated that the agency intended to incorporate the April 6, 2000 letter to Mr. Spingler into the revised version of FMVSS No. 108.[20] We believe it is important to identify how the agency will conduct compliance testing and we did this in the NPRM and again discussed the issue in the final rule. Therefore, paragraph S10.18.9.1.5 has not been modified and the petitions from the Associations, Koito, and Calcoast are denied. However, we do note that regulated parties are able to test at different distances if they choose, although NHTSA compliance tests will be done at 10 m. We note the petitioners may

[19] *http://isearch.nhtsa.gov/files/21406.ztv.html.*

[20] 70 FR 77457, (Dec. 30, 2005).

submit data to support a change in the specified distance in a separate petition.

Nissan requested that the inward force test specified in paragraph S14.6.12 be excluded for VHAD and VOA lamps. Nissan stated that the text of the currently applicable version of FMVSS No. 108 did not require VHAD and VOA lamps to conform to this test. Further supporting Nissan's claim, the preamble to a final rule [21] published May 9, 1989 stated:

> The deletion of inward force and torque deflection is appropriate for headlighting systems which do not use externally applied aimers, since these tests are intended to show resistance to the effects of the weight and application of external aimers * * * NHTSA believes that vehicle manufacturers will be cautious enough to design vehicles to withstand the likelihood of misaim in [the] event [the vehicle is pushed by hand], and, considering the deletion appropriate only for headlamps which do not have aiming pads for external mechanical aimers, has adopted the proposed modification of applicability of inward force and torque deflection tests.

Koito also pointed to the preamble of the May 9, 1989, final rule in arguing that the inward force only applies to headlamps that are capable of being externally aimed.

The agency agrees that the inward force test was only required for headlamps with external aimers in the text of the currently applicable version of FMVSS No. 108, therefore we have made the following modifications to the standard: ''S10.13.4.1 Each sealed beam headlamp must be designed to conform to the performance requirements of the corrosion test, vibration test, inward force test (*for lamps which are externally aimed only*), torque deflection test (*for lamps which are externally aimed only*), headlamp connector test, headlamp wattage test, and aiming adjustment tests of S14.6.'' ''S10.14.7.1 Each integral beam headlamp must be designed to conform to the performance requirements of the corrosion test, temperature cycle test, vibration test, inward force test (*for lamps which are externally aimed only*), headlamp connector test, and aiming adjustment tests of S14.6.'' ''S10.15.7.1 Each replaceable bulb headlamp must be designed to conform to the performance requirements of the corrosion test, corrosion-connector test, dust test, temperature cycle test, humidity test, vibration test, inward force test (*for lamps which are externally aimed only*), headlamp connector test, and aiming adjustment tests of S14.6.''

The Associations and Grote requested that language be added to the standard to allow the use of turn signal and stop lamps designed for use on vehicles 2032 mm or more in overall width, which meet the one lighted section photometric values, on narrow vehicles other than passenger cars. The Associations noted that SAE J1395 (APR 1985), the standard applicable to turn signal lamps on wide vehicles, states that a lamp built to this standard may also be used on a narrow vehicle. The Associations pointed to an August 22, 1990 agency interpretation letter to Hella,[22] that stated ''SAE J1395 also provides that these lamps [turn signal lamps designed for use on vehicles 2032 mm or more in overall width] may be used on vehicles less than this width, except passenger cars,'' to support its position.

We disagree with the interpretation of FMVSS No. 108 put forward by the Associations and Grote. We stated in the preamble of the final rule that there are no provisions in the existing standard that allow the installation of wide vehicle stop and turn signal lamps on narrow vehicles in lieu of the clearly stated requirements for narrow vehicles in Table III of the existing standard. We consider the requirements for stop lamps and turn signal lamps used on narrow vehicles in the currently applicable version of FMVSS No. 108 to be clearly stated. There is no agency guidance stating that manufacturers of narrow vehicles may choose an alternative other than Table III for requirements for stop and turn signal lamps for use on narrow vehicles. Neither Table III, SAE J588 (NOV 84), or SAE J586 (FEB 84), *Stop Lamps for Use on Motor Vehicles Less than 2032 mm in Overall Width,* state that lighting from wide vehicles can also be used on narrow vehicles. For narrow vehicles, a lamp must meet the requirements for narrow vehicles as specified in Table III of the currently applicable version of the standard. Further, the agency stated in a May 22, 2003 letter of interpretation to Panor Corporation [23] that turn signal and stop lamps designed for use on both narrow and wide vehicles must meet the requirements of SAE standards applicable to both narrow and wide vehicles. The letter to Panor stated that stop lamps to be used on both narrow and wide vehicles must meet both SAE J1398 (MAY 1985) and SAE J586 (MAY 1984) and turn signal lamps to be used on both narrow and wide vehicles must meet both SAE J1395 (APR 1985) and SAE J588 (NOV 1984). It is the agency's position that the letter to Panor, not the letter to Hella, states the correct interpretation regarding the use of turn signal and stop lamps designed for wide vehicles on narrow vehicles. Considering these factors, the petitions from the Associations and Grote are denied.

Harley-Davidson requested that the agency amend Table IV-a which contains the requirements for projected luminous lens area to allow a projected luminous lens area of 2200 square mm for multiple compartment stop lamps used on motorcycles. Harley-Davidson stated that an effective projected luminous lens area of 2200 square mm for multiple compartment stops lamps is permitted under the currently applicable version of FMVSS No. 108. The agency agrees that FMVSS No. 108 permits an effective projected luminous lens area of 2200 square mm for multiple compartment stops lamps used on motorcycles. Accordingly, the agency has amended Table IV-a to include a projected luminous lens area of 2200 square mm for multiple compartment stop lamps used on motorcycles.

We are denying Nissan's request to modify the legacy visibility wording for turn, stop, and taillamps within Table V-d because the language suggested by Nissan does not fully correspond with the requirements in the SAE standard referenced by the existing standard. For example, the wording suggested by Nissan might allow for a situation in which visibility, as defined by area, may be compromised within a position less than the required 45 degrees while the area requirement is met at 45 degrees This situation is currently not permitted.

AAM stated that footnotes 1 and 4 of Table VIII, regarding the photometric intensity values between test points and the maximum intensity of taillamps respectively, were not previously incorporated into the current standard. AAM maintained that footnote 1 is not referenced in current version of FMVSS No. 108 or in SAE J585 (AUG 1977), *Tail Lamps (Rear Position Lamps),* and that footnote 4 was preempted by figures contained in the current version of FMVSS No. 108.

We are denying AAM's request to remove footnote 1 and footnote 4 from Table VIII. As stated in the preamble of the final rule, Footnote 1 was added to Table VIII of the rewrite unchanged from the text of SAE J575 (AUG 1970), *Test for Motor Vehicle Lighting Devices and Components,* which was previously incorporated by reference in FMVSS No. 108.[24] The agency, however, is revising

[21] 54 FR 20067, (May 9, 1989).

[22] *http://isearch.nhtsa.gov/aiam/aiam4773.html.*

[23] *http://isearch.nhtsa.gov/files/00473.ztv.html.*

[24] 72 FR 68261, (Dec. 4, 2007).

footnote 4 such that it matches the text in paragraph S5.1.1.6 of the existing standard so as not to make substantive changes to the standard during the rewrite process.

The agency is denying Nissan's request to amend the footnotes to photometric tables containing the requirements for signal lamps. In incorporating third-party documents into the text of the rewrite of the standard, the agency sought not to make any changes to the requirements contained in the third-party documents. We believe that this goal is best accomplished by directly incorporating the text from the third-party documents with minimal changes. While further changes to the standard may improve clarity, the agency believes that these changes are outside the scope of the rewrite.

In the preamble of the final rule the agency explained its views on the subject of grouped compliance.[25] The footnotes to the photometric tables allow the failure of a test point in the group to be offset if other points in the group exceed their minimum by the required margin. The agency does not believe that the footnotes contradict the requirements in the photometric tables and declines to amend the footnotes for the reasons stated in the preamble of the final rule.

Valeo and the Associations requested that the agency reconsider its decision to specify a 90L to 90R horizontal range defined in the area of 10U to 90U in the first row of Table XIX. The agency is denying the petitioner's request. In the NPRM the agency stated that it planned to incorporate a July 2, 1999 letter of interpretation to Tilman Spingler[26] which specified a horizontal range of 90L to 90R in the 10U to 90U area.[27] In this letter the agency stated that:

> Each of the Figures you reference specify a maximum of 125 candela for test points 10U–90U. The Figures do not state where in space from left to right to locate the vertical line, and thus, they do not specify that a line is to be measured. It follows that the only description of a set of test points is that of the entire area from 90L to 90R and 10U to 90U, i.e., an area from the extreme left of the test point grid to the extreme right of the test point grid, with an elevation of from 10U to 90U.

The agency believes that a horizontal zone of 90L to 90R for the 10U to 90U area flows logically from the requirements of Figures 15–1, 15–2, 17–1, 17–2, 28–1, and 28–2 in the current version of FMVSS No. 108. Therefore, the agency is retaining the horizontal range specified in the final rule.

D. Amendments To Improve Clarity

The agency has considered the requests to amend the standard to provide greater clarity or reorganize portions of the standard to improve readability. The agency has made every effort during the rewrite of FMVSS No. 108 to improve usability of the standard. The agency has granted requests to further improve the standard by moving certain language or removing redundant requirements where we felt that the requested changes could be made without substantively altering the requirements of the standard.

We are denying Nissan's request to modify paragraph S6.1.3.4.2 to include language from a February 12, 1998 interpretation letter to Ford Motor Company to clarify the meaning of the phrase ''special tools.'' In response to petitions for reconsideration, we are not adding new interpretation letters beyond those addressed in the NPRM and final rule.

Harley-Davidson requested that the agency clarify that it is permissible to mount dual motorcycle headlamps horizontally. We agree that paragraph S6.1.3.5.1.3 introduces ambiguity to the requirements for when motorcycle headlamps must be mounted vertically. Paragraph S6.1.3.5.1.3 of the rewrite is derived from paragraph S7.9.1(b) of the currently applicable version of FMVSS No. 108. Paragraph S7.9.1(b) states that a motorcycle headlamp system consisting of half of certain automobile headlamp systems must be mounted vertically. The requirement that a motorcycle headlamp system consisting of half an automobile headlamp system be mounted vertically is also contained in paragraph S10.17(a) of the rewrite of FMVSS No. 108. Because the requirements of S6.1.3.5.1.3 are more clearly stated elsewhere in the rewrite, the agency considers paragraph S6.1.3.5.1.3 to be duplicative. Therefore, we are removing paragraph S6.1.3.5.1.3 from the rewrite of FMVSS No. 108.

Koito requested that paragraph S7.3.12.1, which specifies the requirements for the ratio of intensities between a stop lamp and a taillamp, be modified to clarify that SAE J1398 (MAY 1998), applicable to wide vehicles, does not have a 560 mm or 410 mm classification and always applies the ratio requirement when determining the appropriate photometric multiplier. We agree that there was no 560 mm or 410 mm classification for wide vehicles in the text of the currently applicable version of FMVSS No. 108. However, the agency believes that the paragraphs of S7.3.12 are clear as written in the final rule. Because no class restrictions are placed within paragraph S7.3.12.1, the requirements apply to all vehicles regardless of width. While we do not believe that we need to modify this paragraph, we do note that Koito's stated understanding of the issue is correct.

As Nissan requested, paragraph S8.2.1.5 has been modified to add a subject to the sentence. It now reads: ''Application Location. *Conspicuity systems* need not be * * *''

Nissan requested that paragraph S10.1.2 be modified to eliminate the duplicate requirements for motorcycle headlamp systems. Paragraph S10.1.2 states: ''Each motorcycle must be equipped with a headlighting system conforming to S10.17 of this standard or one half of any headlighting system of Table II which provides both a full upper beam and a full lower beam.'' Paragraph S10.17 states: ''* * * a motorcycle headlighting system may consist of: (a) one half of any headlighting system of Table II which provides both a full upper beam and full lower beam, and is designed to conform to the * * *'' The agency agrees that this language is needlessly redundant, and has modified paragraph S10.1.2 by removing the reference to headlighting systems comprising half of Table II headlighting systems. Paragraph S10.1.2 now states: ''Each motorcycle must be equipped with a headlighting system conforming to S10.17 of this standard.''

Koito recommended modifying paragraph S10.15.1, dealing with replaceable bulb headlamp systems, which states: ''Installation * * * A system must provide in total not more than two upper beams and two lower beams and must incorporate not more than two replaceable light sources in each headlamp.'' Koito claimed this text will allow for a four lamp system to contain two replaceable bulbs within each of the four lamps which is not the intention of the original requirement.

The agency believes this paragraph clearly and accurately expresses the text of the currently applicable version of FMVSS No. 108. The text of the paragraph is substantially similar to that of paragraph S7.5(a) of the existing standard. NHTSA does not believe that a change to this paragraph is necessary and is denying this request by Koito.

Koito and Toyota both requested a modification to paragraph S10.15.5 which states: ''Additional light sources. A replaceable bulb headlamp may incorporate replaceable light sources that are used for purposes other than headlighting.'' Both Koito and Toyota requested that the second use of the

[25] 72 FR 68282, (Dec. 4, 2007).

[26] *http://isearch.nhtsa.gov/files/19548.ztv.html.*

[27] 70 FR 77457, (Dec. 30, 2005).

word ''replaceable'' be deleted from this requirement because they believed that the language implied that light sourced used for purposes other than headlighting incorporated into a replaceable bulb headlamp must always be replaceable. The agency believes that the language used in the final rule is consistent with the current standard and clearly describes the requirements of replaceable bulb headlamps that incorporate other light sources. Therefore, the agency is denying this request. Nissan requested that paragraph S10.18.9.5, which contains photometry requirements for visually/optically aimed headlamps, be deleted. Nissan claimed that this paragraph is redundant with paragraphs S10.13.3, S10.14.6, S10.15.6, S10.16.2, and Table II which contain the photometry requirements for all permissible headlamps. Nissan suggested that these requirements should be stated only once in FMVSS No. 108. The agency agrees that the paragraphs are redundant and we believe that a user of this standard could locate the necessary information without this paragraph with the assistance of Table II. However, the redundancy of paragraph S10.18.9.5 may significantly increase the usability of the standard for a particular user interested primarily in finding the requirements of a visually/optically aimable headlamp. Accordingly, we have not modified paragraph S10.18.9.5 and we are denying Nissan's request.

Nissan requested that the agency reorganize paragraph S13.3 containing the marking requirements for replacement lenses. Nissan noted that marking requirements for replacement lenses are already included in paragraph S6.5.1, along with the other headlamp DOT marking requirements. Nissan also requested that the remaining requirements in paragraph S13.3 be moved with a new paragraph number under paragraph S6.5.3.6 in order to consolidate all the requirements in one place. The agency agrees that keeping the marking requirements together is an important factor in meeting the stated goal of making the standard more user-friendly. Therefore, S13.3 has been deleted, and a new paragraph S6.5.3.6 has been added to read as published in this final rule.

The Associations and SABIC requested a modification to paragraph S14.1.2, which contains the testing specifications for all plastic materials used for optical parts on lamps or reflective devices. SABIC requested that the word ''transparent'' be added before ''optical'' and the word ''reflex'' before the word ''reflectors'' to clarify that the requirements of this paragraph do not apply to opaque materials used in light components. The Associations also requested that the word ''reflex'' be added before the word reflector. We note that paragraph S14.1.2 was transposed from paragraph S5.1.2 of the currently-applicable version of FMVSS No. 108 which states: ''Plastic materials used for optical parts such as lenses and reflectors shall conform to SAE Recommended Practice J576 JUL 1991, except that:'' The agency notes that neither the word ''transparent,'' nor the word ''reflex'' was in the text of the currently applicable version of FMVSS No. 108. We believe the word ''transparent'' could be interpreted such that the addition of this word would create a substantive modification to the requirement and that adding the term ''reflex'' would also stray from our intention to transpose existing language without making changes. Therefore, we are denying this request.

Nissan requested a modification to paragraph S14.2.4.3, dealing with DRL bulb photometric testing requirements. Nissan maintained that the requirements of this paragraph create conflict with paragraph S14.2.4.1. Paragraph S14.2.4.3 contains a pointing statement to paragraph S14.2.1.6 which states that bulbs are to be operated at their rated mean spherical candela during testing of DRL photometry requirements. Paragraph S14.2.4.1 requires that the bulbs be operated at a fixed 12.8 V input during DRL photometry testing. This creates a conflict within the regulatory text because a bulb's mean spherical candela may not be achieved at 12.8V. In order to eliminate this apparent contradiction, Nissan suggested modifying S14.2.4.3 to state ''Bulb requirements of S14.2.1.6 apply to DRL photometry, except for the need to operate at the rated mean spherical candela.''

The agency agrees that the last statement in paragraph S14.2.1.6 requiring that bulbs be operated at their mean spherical candela during photometry testing does not apply to DRLs because this requirement is excluded by the ''unless otherwise specified'' clause within SAE J575e (AUG 1970). The requirement that bulbs be operated at their mean spherical candela does not apply to DRLs because of specific voltage callout in paragraph S11 of the currently applicable version of the standard. Accordingly, paragraph S14.2.4.3 has been modified by removing the reference to paragraph S14.2.1.6 and now reads as follows: ''S14.2.4.3 Except for a lamp having a sealed-in bulb, a lamp must meet the applicable requirements of this standard when tested with a bulb whose filament is positioned within ± .010 in. of the nominal design position specified in SAE J573d, *Lamp bulbs and Sealed Units,* December 1968, (incorporated by reference, see 571.108 S5.2 of this title) or specified by the bulb manufacturer.''

Koito requested a clarification of the requirement in S14.4.2.1.3 that specifies testing for plastic optical materials. Koito questioned if a material thickness of 7 mm can be certified if it was once tested in the four thicknesses required by this standard. The agency does not believe it is appropriate to address this interpretive question within this notice. However, we do note that the Koito request will be addressed in the follow-up notice.

Nissan requested that the table under paragraph S14.9.3.11.2.3.1 be given a title and relocated to the table section of the standard and referenced as Table XXI. We are denying this request. The table is part of paragraph S14.9.3.11.2.3.1, *Operating limits*. The agency feels that the requirements specified in the table are most appropriately located with the other requirements applicable to semiautomatic headlamp beam switching device tests.

AAM requested that Table I–a be separated to create two new tables based on overall vehicle width. AAM stated that splitting Table I–a to create separate tables for narrow and wide vehicles would simplify the standard and make it easier to use. The agency is denying AAM's request. We believe that it is appropriate to group the requirements for both wide vehicles and narrow vehicles together based on the commonality of the requirements for both wide and narrow vehicles.

AAM stated that the requirements for DRLs should not be included in Table I–a because DRLs are optional equipment and Table I–a is entitled *Required Lamps and Reflective Devices*. AAM believed that locating the requirements for DRLs in Table I–a detracts from the ease of usability of the standard. We disagree with AAM's argument. The agency believes that Table I–a is the most appropriate location for the requirements for DRLs. Unlike other optional lamps and lighting equipment installed on vehicles, DRLs, when installed, are regulated according to all the categories contained in Table I–a. We believe that final rule clearly indicates that DRLs are optional equipment. Therefore, AAM's request is denied.

Koito requested that the agency amend the device activation requirements for high mounted stop lamps contained in Table I–a. Koito requested that the agency clarify that

activation of the high mounted stop lamp upon application of a device designed to retard the motion of the vehicle is optional. We agree that activation of the high mounted stop lamp is optional upon application of a device designed to retard the motion of the vehicle and have revised Table I–a to note this distinction.

AAM requested that the titles of Tables I–a, I–b, and I–c be changed to include the vehicles to which the tables apply. NHTSA is denying this request. We feel that the subheadings included in the tables clearly indicate the class of vehicles to which the tables apply.

Valeo, Grote, and the Associations requested that the agency modify Table XII to clarify that when a single backup lamp is used on a vehicle the maximum photometric intensity allowed is 600 candela. The agency agrees and has added the 600 candela value to Table XII and a footnote stating: ''the value before the slash applies to each lamp in a multiple lamp system; the value after the slash applies to a single lamp system.''

Nissan requested that the agency modify footnote 1 in Tables XIX–a, XIX–b, and XIX–c to clarify the photometry requirements for the test areas specified in the tables. The agency agrees and is modifying footnote 1 in each of the three tables to read: these test points are boundaries; intensity values within this boundary must meet the listed photometry requirement.

The agency has attempted to format the tables of FMVSS No. 108 in the most user friendly manner. Where the agency was able to avoid splitting tables across multiple pages, the agency has done so. We believe that for some of the larger tables contained in the standard, modifications necessary to fit the tables on to a signal page, such as shrinking the text in the table, would make the tables more difficult to use.

E. Preemptive Effect of FMVSS No. 108

AAJ requested that the agency remove any reference to preemption of state tort law from the preamble of the final rule. AAJ argued that *Geier* v. *American Honda Motor Co.*[28] is an unusual, fact-driven case and does not provide a basis for the agency to claim that all Federal motor vehicle safety standards preempt state tort law. AAJ maintained that FMVSS No. 108 is a minimum safety standard and, thus, is not intended to preempt state tort law. AAJ claimed that it was premature for the agency to speculate about the preemptive effect of a rule before the existence of an actual legal conflict on the record. AAJ further argued that any claim of preemption by the agency is subject to the notice and comment provisions of the *Administrative Procedure Act.*[29]

The agency does not consider AAJ's submission to be a petition for reconsideration, as NHTSA's preemption discussion contained in the preamble is not a rule. Accordingly, we are treating this petition as a simple request to disavow the preemption discussion in the final rule preamble.

We provided the general discussion of implied preemption and *Geier* in accordance with the directive of Executive Order 13132, Federalism, for agencies to analyze the federalism implications of their rulemakings. In that discussion, the agency explained that NHTSA's safety standards can preempt state laws in at least two ways: Either expressly, through the express preemption provision of the Vehicle Safety Act, or impliedly, if State requirements create a conflict and thus stand as an obstacle to the accomplishment and execution of a NHTSA safety standard. The agency would like to note that because most FMVSS are minimum standards, a State common law tort cause of action that seeks to impose a higher standard on motor vehicle manufacturers will generally not be preempted. However, if and when such a conflict does exist—for example, when the standard at issue is both a minimum and a maximum standard—the State common law tort cause of action is impliedly preempted. See *Geier* v. *American Honda Motor Co.,* 529 U.S. 861 (2000).

To this end, the agency has examined the nature (*e.g.,* the language and structure of the regulatory text) and objectives of the final rule, which like many NHTSA rules, prescribes only a minimum safety standard. As such, NHTSA does not intend that this rule preempt state tort law that would effectively impose a higher standard on motor vehicle manufacturers than FMVSS No. 108. Establishment of a higher standard by means of State tort law would not conflict with the minimum standard announced in FMVSS No. 108. Without any conflict, there could not be any implied preemption of a State common law tort cause of action. For the aforementioned reasons, the agency declines to remove the *Geier* language from its discussion of preemption law.

[28] 529 U.S. 861 (2000).

[29] 5 U.S.C. 553.

V. Rulemaking Analyses and Notices

A. Executive Order 12866, Executive Order 13563, and DOT Regulatory Policies and Procedures

NHTSA has considered the impact of this rulemaking action under Executive Order 12866, Executive Order 13563, and the Department of Transportation's regulatory policies and procedures. This rulemaking document was not reviewed by the Office of Management and Budget under E.O. 12866, ''Regulatory Planning and Review.'' It is not considered to be significant under E.O. 12866 or the Department's regulatory policies and procedures. This final rule merely corrects technical and typographical errors in FMVSS No. 108. Today's rule will not have any measurable effect on costs or benefits since the rule merely reorganizes and clarifies existing requirements.

B. Privacy Act

Anyone is able to search the electronic form of all comments received into any of our dockets by the name of the individual submitting the comment (or signing the comment, if submitted on behalf of an association, business, labor union, etc.). You may review DOT's complete Privacy Act Statement in the **Federal Register** published on April 11, 2000 (Volume 65, Number 70; Pages 19477–78) or you may visit *http://docketsinfo.dot.gov/.*

C. Other Rulemaking Analyses and Notices

In the December 2007 final rule, the agency discussed relevant requirements related to the Regulatory Flexibility Act, the National Environmental Policy Act, Executive Order 13132 (Federalism), the Unfunded Mandates Reform Act, Civil Justice Reform, the National Technology Transfer and Advancement Act, the Paperwork Reduction Act, and Executive Order 13045 (Protection of Children from Environmental Health and Safety Risks). Since that final rule was an administrative rewrite of existing requirements and since today's action simply makes technical corrections to that final rule, today's rule does not affect the agency's analyses in those areas.

List of Subjects in 49 CFR Part 571

Imports, Incorporation by reference, Motor vehicle safety, Motor vehicles, and Tires.

In consideration of the foregoing, NHTSA is amending 49 CFR Part 571 as follows:

PART 571—FEDERAL MOTOR VEHICLE SAFETY STANDARDS

■ 1. The authority citation for Part 571 continues to read as follows:

Authority: 49 U.S.C. 322, 30111, 30115, 30117, 30166; delegation of authority at 49 CFR 1.50.

■ 2. Section 571.108 is amended as follows:

■ a. By revising entry 17 in S5.2; paragraphs S6.1.1.4; S6.1.3.2; S6.2.3.1; S6.4.4; S6.5.3; S6.5.3.3.1; S6.5.3.6; S7.1.1.9 ; S7.1.1.10.4(a); S7.1.1.11; S7.1.1.11.1; S7.1.1.12.4; S7.1.2.9; S7.2.9; S7.3.9; S7.4.9; S7.5.9; S7.6.9; S7.7.4; S7.7.9; S7.8.9; S7.9.9; S7.9.14; S7.11.9; S8.1.9; S8.2.1.5; S10.1.2; S10.13.4.1; S10.14.7.1; S10.15.7.1; S10.18; S14.2.1.5.2; S14.2.4.3; S14.3.1; S14.6.9.1.1; Table I–a; Table I–b; Table I–c; Table III; Table IV–a; Table IV–b; Table IV–c; Table V–a; Table V–d; Table VIII; Table IX; Table XII; Table XIV; Table XV; Table XIX–a; Table XIX–b; Table XIX–c;

■ b. By adding a definition of ''Combination headlamp system'' in S4; entry 18 in S5.2; paragraph S6.5.3.1;

■ c. By removing paragraph S6.1.3.5.1.3, removing and reserving paragraph S10.2, and removing paragraph S13.3; and

■ d. By removing paragraphs S7.9.14.1.1 and S7.9.14.1.2, and adding paragraphs S7.9.14.1 and S7.9.14.2 in their place.

The revisions and additions to § 571.108 read as follows:

§ 571.108 Standard No. 108; Lamps, reflective devices, and associated equipment.

* * * * *

S4 *Definitions.*

* * * * *

Combination Headlamp means a headlamp that is a combination of two different headlamp types chosen from a type F sealed beam headlamp, an integral beam headlamp, or a replaceable bulb headlamp.

* * * * *

S5.2 * * *

17. American Society for Testing and Materials (ASTM) C150–56, published 1956, ''Standard Specifications for Portland Cement.'' ASTM International, 100 Barr Harbor Drive, PO Box C700, Conshohocken, PA 19428–2959.

18. Illuminating Engineering Society of North America (IES) LM 45, approved April 1980, ''IES Approved Method for Electrical and Photometric Measurements of General Service Incandescent Filament Lamps.'' Illuminating Engineering Society of North America, 345 East 47th St., New York, NY 10017.

* * * * *

S6.1.1.4 *Daytime running lamps.* Any pair of lamps on the front of a passenger car, multipurpose passenger vehicle, truck, or bus, whether or not required by this standard, other than parking lamps or fog lamps, may be wired to be automatically activated, as determined by the manufacturer of the vehicle, in a steady burning state as daytime running lamps (DRLs) in accordance with S7.10.5.

* * * * *

S6.1.3.2 When multiple lamp arrangements for rear turn signal lamps, stop lamps, or taillamps are used, with only a portion of the lamps installed on a fixed part of the vehicle, the lamp or lamps that are installed to the non-fixed part of the vehicle will be considered auxiliary lamps.

* * * * *

S6.2.3.1 When activated in the steady burning state, headlamps (excluding headlamps mounted on motorcycles) must not have any styling ornament or other feature, such as a translucent cover or grill, in front of the lens

* * * * *

S6.4.4 *Legacy visibility alternative.* As an alternative to S6.4.3, each passenger car and motorcycle, and each multipurpose passenger vehicle, truck, trailer, and bus that is of less than 2032 mm overall width, that is manufactured on or before September 1, 2011, and each multipurpose passenger vehicle, truck, trailer, and bus that is of 2032 mm or more overall width, that is manufactured on or before September 1, 2014, must have each lamp located so that it meets the visibility requirements specified in Table V–d.

* * * * *

S6.5.3 *Headlamp markings.*

S6.5.3.1 *Trademark.* The lens of each original and replacement equipment headlamp, and of each original and replacement equipment beam contributor must be marked with the name and/or trademark registered with the U.S. Patent and Trademark Office of the manufacturer of such headlamp or beam contributor, of its importer, or any manufacturer of a vehicle equipped with such headlamp or beam contributor. Nothing in this standard authorizes the marking of any such name and/or trademark by one who is not the owner, unless the owner has consented to it.

* * * * *

S6.5.3.3.1 Each sealed beam headlamp lens must be molded with ''sealed beam'' and the appropriate designation code as shown in Table II in characters no less than 6.35 mm in size.

* * * * *

S6.5.3.6 Each replacement headlamp lens must also be marked with the manufacturer and the part or trade number of the headlamp for which it is intended, and with the name and/or trademark of the lens manufacturer or importer that is registered with the U.S. Patent and Trademark Office. Nothing in this standard authorizes the marking of any such name and/or trademark by one who is not the owner, unless the owner has consented to it.

* * * * *

S7.1.1.9 *Markings.* See S6.5.1.2.

* * * * *

S7.1.1.10.4 *Spacing based photometric multipliers.*

(a) where the spacing measurement as measured from the optical center of the turn signal lamp, to the lighted edge of a lower beam headlamp is less than 100 mm the photometric multiplier must be 2.5.

* * * * *

S7.1.1.11 *Multiple compartment lamps and multiple lamps.*

S7.1.1.11.1 A multiple compartment lamp or multiple lamps may be used to meet the photometric requirements of a front turn signal lamp provided the requirements of S6.1.3.2 are met.

* * * * *

S7.1.1.12.4 Where the clearance lamp is combined with the turn signal lamp, and the maximum luminous intensity of the clearance lamp is located below horizontal and within an area generated by a 1.0 degree radius around a test point, the ratio for the test point may be computed using the lowest value of the clearance lamp luminous intensity within the generated area.

* * * * *

S7.1.2.9 *Markings.* See S6.5.1.2.

* * * * *

S7.2.9 *Markings.* See S6.5.1.2.

* * * * *

S7.3.9 *Markings.* See S6.5.1.2.

* * * * *

S7.4.9 *Markings.* See S6.5.1.2.

* * * * *

S7.5.9 *Markings.* See S6.5.1.2.

* * * * *

S7.6.9 *Markings.* See. S6.5.1.2.

* * * * *

S7.7.4 *Mounting height.* No requirement.

* * * * *

S7.7.9 *Markings.* See. S6.5.1.2.

* * * * *

S7.8.9 *Markings.* See. S6.5.1.2.

* * * * *

S7.9.9 *Markings.* See. S6.5.1.2.

* * * * *

S7.9.14 *Physical tests.*

S7.9.14.1 Each high-mounted stop lamp must be designed to conform to

the performance requirements of the vibration test of S14.5, and the color test and plastic optical material test of S14.4.

S7.9.14.2 Each high-mounted stop lamp that is not mounted inside the vehicle must be designed to conform to the performance requirements of the moisture test, dust test, and corrosion test of S14.5.

* * * * *

S7.11.9 *Markings.* See. S6.5.1.2.

* * * * *

S8.1.9 *Markings.* See. S6.5.1.2.

* * * * *

S8.2.1.5 *Application location.* Conspicuity systems need not be installed, as illustrated in Figure 12–2, on discontinuous surfaces such as outside ribs, stake post pickets on platform trailers, and external protruding beams, or to items of equipment such as door hinges and lamp bodies on trailers and body joints, stiffening beads, drip rails, and rolled surfaces on truck tractors.

* * * * *

S10.1.2 Each motorcycle must be equipped with a headlighting system conforming to S10.17 of this standard.

S10.2 [Reserved]

* * * * *

S10.13.4.1 Each sealed beam headlamp must be designed to conform to the performance requirements of the corrosion test, vibration test, inward force test (for lamps which are externally aimed only), torque deflection test (for lamps which are externally aimed only), headlamp connector test, headlamp wattage test, and aiming adjustment tests of S14.6.

* * * * *

S10.14.7.1 Each integral beam headlamp must be designed to conform to the performance requirements of the corrosion test, temperature cycle test, vibration test, inward force test (for lamps which are externally aimed only), headlamp connector test, and aiming adjustment tests of S14.6.

* * * * *

S10.15.7.1 Each replaceable bulb headlamp must be designed to conform to the performance requirements of the corrosion test, corrosion-connector test, dust test, temperature cycle test, humidity test, vibration test, inward force test (for lamps which are externally aimed only), headlamp connector test, and aiming adjustment tests of S14.6.

* * * * *

S10.18 *Headlamp aimability performance requirements* (*except for motorcycles*)

* * * * *

S14.2.1.5.2 Luminous intensity measurements of multiple compartment lamps or multiple lamp arrangements are made either by:

(a) Measuring all compartments together, provided that a line from the optical axis of each compartment or lamp to the center of the photometer sensing device does not make an angle more than 0.6° with the H–V axis, or

(b) Measuring each compartment or lamp separately by aligning its optical axis with the photometer and adding the value at each test point.

* * * * *

S14.2.4.3 Except for a lamp having a sealed-in bulb, a lamp must meet the applicable requirements of this standard when tested with a bulb whose filament is positioned within ± .010 in. of the nominal design position specified in SAE J573d, Lamp bulbs and Sealed Units, December 1968, (incorporated by reference, paragraph S5.2 of this section) or specified by the bulb manufacturer.

* * * * *

S14.3.1 *Procedure.* The sample device must be tested for photometry using bulbs having each of four out-of-focus filament positions. Where conventional bulbs with two pin bayonet bases are used, tests must be made with the light source 0.060 in. above, below, ahead, and behind the designated position. If prefocused bulbs are used, the limiting positions at which tests are made must be 0.020 in. above, below, ahead, and behind the designated position. The sample device may be reaimed for each of the out-of-focus positions of the light source.

* * * * *

S14.6.9.1.1 An unfixtured sample headlamp in its design mounting position is placed in water at a temperature of 176° ± 5° F (80° ± 3° C) for one hour. The headlamp is energized in its highest wattage mode, with the test voltage at 12.8 ± 0.1 V during immersion.

* * * * *

TABLE I–a—REQUIRED LAMPS AND REFLECTIVE DEVICES

Lighting device	Number and color	Mounting location	Mounting height	Device activation
All Passenger Cars, Multipurpose Passenger Vehicles (MPV), Trucks, and Buses				
Lower Beam Headlamps.	White, of a headlighting system listed in Table II.	On the front, at the same height, symmetrically about the vertical centerline, as far apart as practicable.	Not less than 22 inches (55.9 cm) nor more than 54 inches (137.2 cm).	The wiring harness or connector assembly of each headlighting system must be designed so that only those light sources intended for meeting lower beam photometrics are energized when the beam selector switch is in the lower beam position, and that only those light sources intended for meeting upper beam photometrics are energized when the beam selector switch is in the upper beam position, except for certain systems listed in Table II. Steady burning, except that may be flashed for signaling purposes.
Upper Beam Headlamps.	White, of a headlighting system listed in Table II.	On the front, at the same height, symmetrically about the vertical centerline, as far apart as practicable.	Not less than 22 inches (55.9 cm) nor more than 54 inches (137.2 cm).	

TABLE I–a—REQUIRED LAMPS AND REFLECTIVE DEVICES—Continued

Lighting device	Number and color	Mounting location	Mounting height	Device activation
Turn Signal Lamps	2 Amber	At or near the front, at the same height, symmetrically about the vertical centerline, as far apart as practicable.	Not less than 15 inches, nor more than 83 inches.	Flash when the turn signal flasher is actuated by the turn signal operating unit.
	2 Amber or red Truck tractor exception, see S6.1.1.3.	On the rear, at the same height, symmetrically about the vertical centerline, as far apart as practicable.		
Taillamps	2 Red	On the rear, at the same height, symmetrically about the vertical centerline, as far apart as practicable.	Not less than 15 inches, nor more than 72 inches.	Steady burning. Must be activated when the headlamps are activated in a steady burning state or the parking lamps on passenger cars and MPVs, trucks, and buses less than 80 inches in overall width are activated. May be activated when the headlamps are activated at less than full intensity as Daytime Running Lamps (DRL).
Stop Lamps	2 Red	On the rear, at the same height, symmetrically about the vertical centerline, as far apart as practicable.	Not less than 15 inches, nor more than 72 inches.	Steady burning. Must be activated upon application of the service brakes. When optically combined with a turn signal lamp, the circuit must be such that the stop signal cannot be activated if the turn signal lamp is flashing. May also be activated by a device designed to retard the motion of the vehicle.
Side Marker Lamps	2 Amber	On each side as far to the front as practicable.	Not less than 15 inches.	Steady burning except may be flashed for signaling purposes. Must be activated when the headlamps are activated in a steady burning state or the parking lamps on passenger cars and MPVs, trucks, and buses less than 80 inches in overall width are activated.
	2 Red (not required on truck tractor).	On each side as far to the rear as practicable.		
Reflex Reflectors	2 Amber	On each side as far to the front as practicable.	Not less than 15 inches, nor more than 60 inches.	Not applicable.
	2 Red (not required on truck tractor)..	On each side as far to the rear as practicable.		
	2 Red	On the rear, at the same height, symmetrically about the vertical centerline, as far apart as practicable. On a truck tractor may be mounted on the back of the cab not less than 4 inches above the height of the rear tires.		
Backup Lamp	1 White Additional lamps permitted to meet requirements.	On the rear	No requirement	Steady burning. Must be activated when the ignition switch is energized and reverse gear is engaged. Must not be energized when the vehicle is in forward motion.
License Plate Lamp	1 White Additional lamps permitted to meet requirements.	On the rear to illuminate license plate from top or sides.	No requirement	Steady burning. Must be activated when the headlamps are activated in a steady burning state or when the parking lamps on passenger cars and MPVs, trucks, and buses less than 80 inches in overall width are activated.

TABLE I–a—REQUIRED LAMPS AND REFLECTIVE DEVICES—Continued

Lighting device	Number and color	Mounting location	Mounting height	Device activation
Additional Lamps Required on All Passenger Cars, and on Multipurpose Passenger Vehicles (MPV), Trucks, and Buses, Less Than 2032 MM in Overall Width				
Parking lamps	2 Amber or white	On the front, at the same height, symmetrically about the vertical centerline, as far apart as practicable.	Not less than 15 inches, nor more than 72 inches.	Steady burning. Must be activated when the headlamps are activated in a steady burning state.
Additional Lamp(s) Required on All Passenger Cars, and on Multipurpose Passenger Vehicles (MPV), Trucks, and Buses, Less Than 2032 MM in Overall Width and With a GVWR of 10,000 Lbs or Less				
High mounted stop lamp.	1 Red, or 2 red where exceptions apply. See Section 6.1.1.2.	On the rear including glazing, with the lamp center on the vertical centerline as viewed from the rear.	Not less than 34 inches except for passenger cars. See Section 6.1.4.1.	Steady burning. Must only be activated upon application of the service brakes or may be activated by a device designed to retard the motion of the vehicle.
Additional Lamps and Reflective Devices Required on All Passenger Cars, Multipurpose Passenger Vehicles (MPV), Trucks, and Buses, 30 Feet or Longer				
Intermediate side marker lamps.	2 Amber	On each side located at or near the midpoint between the front and rear side marker lamps.	Not less than 15 inches.	Steady burning except may be flashed for signaling purposes. Must be activated when the headlamps are activated in a steady burning state or when the parking lamps on passenger cars and MPVs, trucks, and buses less than 80 inches in overall width are activated.
Intermediate side reflex reflectors.	2 Amber	On each side located at or near the midpoint between the front and rear side reflex reflectors.	Not less than 15 inches, nor more than 60 inches.	Not applicable.
Additional Lamps Required on All Multipurpose Passenger Vehicles (MPV), Trucks, and Buses, 2032 MM or More in Overall Width				
Clearance lamps	2 Amber	On the front to indicate the overall width of the vehicle, or width of cab on truck tractor, at the same height, symmetrically about the vertical centerline. May be located at a location other than the front if necessary to indicate the overall width of the vehicle, or for protection from damage during normal operation of the vehicle.	As near the top as practicable.	Steady burning.

TABLE I–a—REQUIRED LAMPS AND REFLECTIVE DEVICES—Continued

Lighting device	Number and color	Mounting location	Mounting height	Device activation
	2 Red ..... (not required on truck tractor).	On the rear to indicate the overall width of the vehicle, at the same height, symmetrically about the vertical centerline. May be located at a location other than the rear if necessary to indicate the overall width of the vehicle, or for protection from damage during normal operation of the vehicle.	As near the top as practicable, except where the rear identification lamps are mounted at the extreme height of the vehicle.. Practicability of locating lamps on the vehicle header is presumed when the header extends at least 25 mm (1 inch) above the rear doors.	Steady burning.
Identification lamps	3 Amber	On the front, at the same height, as close as practicable to the vertical centerline, with lamp centers spaced not less than 6 inches or more than 12 inches apart.	As near the top of the vehicle or top of the cab as practicable.	Steady burning.
	3 Red (not required on truck tractor).	On the rear, at the same height, as close as practicable to the vertical centerline, with lamp centers spaced not less than 6 inches or more than 12 inches apart.	As near the top as practicable. Practicability of locating lamps on the vehicle header is presumed when the header extends at least 25 mm (1 inch) above the rear doors.	Steady burning.
Additional Lamps Required on All School Buses Except Multifunction School Activity Buses				
Signal warning lamps	2 Red plus 2 amber optional.	On the front of the cab as far apart as practicable, but in no case shall the spacing between lamps be less than 40 inches. Amber lamps, when installed, at the same height as and just inboard of the red lamp.	As high as practicable but at least above the windshield.	Flashing alternately between 60 to 120 cycles per minute, with an activation period sufficient to allow the lamp to reach full brightness, when actuated by a manual switch. Amber lamps, when installed, may only be activated by manual or foot operation, and must be automatically deactivated and the red lamps must be automatically activated when the bus entrance door is opened.
	2 Red plus 2 amber optional.	On the rear cab as far apart as practicable, but in no case shall the spacing between lamps be less than 40 inches. Amber lamps, when installed, at the same height as and just inboard of the red lamp.	As high as practicable but at least above the top of any side window opening.	Flashing alternately between 60 to 120 cycles per minute, with an activation period sufficient to allow the lamp to reach full brightness, when actuated by a manual switch. Amber lamps, when installed, may only be activated by manual or foot operation, and must be automatically deactivated and the red lamps must be automatically activated when the bus entrance door is opened.

TABLE I–a—REQUIRED LAMPS AND REFLECTIVE DEVICES—Continued

Lighting device	Number and color	Mounting location	Mounting height	Device activation
Daytime Running Lamps Permitted But Not Required on Passenger Cars, Multipurpose Passenger Vehicles (MPV), Trucks, and Buses				
Daytime running lamp (DRL).	2 identically colored either white, white to yellow, white to selective yellow, selective yellow, or yellow.	On the front, symmetrically disposed about the vertical centerline if not a pair of lamps required by this standard or if not optically combined with a pair of lamps required by this standard.	Not more than 1.067 meters above the road surface if not a pair of lamps required by this standard or if not optically combined with a pair of lamps required by this standard. See S7.10.13(b) for additional height limitation.	Steady burning. Automatically activated as determined by the vehicle manufacturer and automatically deactivated when the headlamp control is in any ''on'' position. Each DRL optically combined with a turn signal lamp must be automatically deactivated as a DRL when the turn signal lamp or hazard warning lamp is activated, and automatically reactivated as a DRL when the turn signal lamp or hazard warning lamp is deactivated. See S7.10.10.1(c) for additional activation requirements when mounted close to, or combined with, a turn signal lamp.

TABLE I–b—REQUIRED LAMPS AND REFLECTIVE DEVICES

Lighting device	Number and color	Mounting location	Mounting height	Device activation
ALL TRAILERS				
Turn Signal Lamps	2 Red or amber	On the rear, at the same height, symmetrically about the vertical centerline, as far apart as practicable.	Not less than 15 inches, nor more than 83 inches.	Flash when the turn signal flasher is actuated by the turn signal operating unit.
Taillamps	2 Red or 1 red on trailers less than 30 inches wide.	On the rear, at the same height, symmetrically about the vertical centerline, as far apart as practicable. When a single lamp is installed it must be mounted at or near the vertical centerline.	Not less than 15 inches, nor more than 72 inches.	Steady burning.
Stop Lamps	2 Red, or 1 red on trailers less than 30 inches wide.	On the rear, at the same height, symmetrically about the vertical centerline, as far apart as practicable. When a single lamp is installed it must be mounted at or near the vertical centerline.	Not less than 15 inches, nor more than 72 inches.	Steady burning. Must be activated upon application of the service brakes. When optically combined with a turn signal lamp, the circuit must be such that the stop signal cannot be activated if the turn signal lamp is flashing. May also be activated by a device designed to retard the motion of the vehicle.
Side Marker Lamps	2 Amber None required on trailers less than 1829 mm [6 ft] in overall length including the trailer tongue.	On each side as far to the front as practicable exclusive of the trailer tongue.	Not less than 15 inches.	Steady burning except may be flashed for signaling purposes.
	2 Red	On each side as far to the rear as practicable.	Not less than 15 inches. Not more than 60 inches on trailers 2032 mm or more in overall width.	

TABLE I–b—REQUIRED LAMPS AND REFLECTIVE DEVICES—Continued

Lighting device	Number and color	Mounting location	Mounting height	Device activation
Reflex Reflectors. A trailer equipped with a conspicuity treatment in conformance with S8.2 of this standard need not be equipped with reflex reflectors if the conspicuity material is placed at the locations of the required reflex reflectors.	2 Amber ..... None required on trailers less than 1829 mm [6 ft] in overall length including the trailer tongue.	On each side as far to the front as practicable exclusive of the trailer tongue.	Not less than 15 inches, nor more than 60 inches.	Not applicable.
	2 Red	On each side as far to the rear as practicable.		
	2 Red or 1 red on trailers less than 30 inches wide.	On the rear, at the same height, symmetrically about the vertical centerline, as far apart as practicable. When a single reflector is installed it must be mounted at or near the vertical centerline..		
License Plate Lamp ...	1 White ..... Additional lamps permitted to meet requirements.	On the rear to illuminate license plate from top or sides.	No requirement	Steady burning.
Additional Lamps and Reflective Devices Required on all Trailers 30 Feet or Longer				
Intermediate side marker lamps.	2 Amber	On each side located at or near the midpoint between the front and rear side marker lamps.	Not less than 15 inches.	Steady burning except may be flashed for signaling purposes.
Intermediate side reflex reflectors. A trailer equipped with a conspicuity treatment in conformance with S8.2 of this standard need not be equipped with reflex reflectors if the conspicuity material is placed at the locations of the required reflex reflectors.	2 Amber	On each side located at or near the midpoint between the front and rear side reflex reflectors.	Not less than 15 inches, nor more than 60 inches.	Not applicable.
Additional Lamps Required on all Trailers 2032 MM or More in Overall Width				
Clearance lamps	2 Amber	On the front to indicate the overall width of the vehicle, at the same height, symmetrically about the vertical centerline. May be located at a location other than the front if necessary to indicate the overall width of the vehicle, or for protection from damage during normal operation of the vehicle.	As near the top as practicable.	Steady burning.
	2 Red	On the rear to indicate the overall width of the vehicle, at the same height, symmetrically about the vertical centerline. May be located at a location other than the rear if necessary to indicate the overall width of the vehicle, or for protection from damage during normal operation of the vehicle.	As near the top as practicable, except where the rear identification lamps are mounted at the extreme height of the vehicle. Practicability of locating lamps on the vehicle header is presumed when the header extends at least 25 mm (1 inch) above the rear doors.	Steady burning.

TABLE I–b—REQUIRED LAMPS AND REFLECTIVE DEVICES—Continued

Lighting device	Number and color	Mounting location	Mounting height	Device activation
	2 Amber to front and red to rear.	On a boat trailer the requirement for front and rear clearance lamps may be met by installation at or near the midpoint on each side of a dual facing lamp so as to indicate the extreme width. May be located at a location other than the front and the rear if necessary to indicate the overall width of the vehicle, or for protection from damage during normal operation of the vehicle.	As near the top as practicable.	Steady burning.
Identification lamps	3 Red	On the rear, at the same height, as close as practicable to the vertical centerline, with lamp centers spaced not less than 6 inches or more than 12 inches apart.	As near the top as practicable. Practicability of locating lamps on the vehicle header is presumed when the header extends at least 25 mm (1 inch) above the rear doors.	Steady burning.

TABLE I–c—REQUIRED LAMPS AND REFLECTIVE DEVICES

Lighting device	Number and color	Mounting location	Mounting height	Device activation
All Motorcycles				
Lower Beam Headlamps.	White, of a headlighting system listed in S10.17.	On the front, at the same height, symmetrically about the vertical centerline, as far apart as practicable. See additional requirements in S10.17.1.1, S10.17.1.2, and S10.17.1.3.	Not less than 22 inches (55.9 cm) nor more than 54 inches (137.2 cm).	The wiring harness or connector assembly of each headlighting system must be designed so that only those light sources intended for meeting lower beam photometrics are energized when the beam selector switch is in the lower beam position, and that only those light sources intended for meeting upper beam photometrics are energized when the beam selector switch is in the upper beam position, except for certain systems listed in Table II.
Upper Beam Headlamps.	White, of a headlighting system listed in S10.17.	On the front, at the same height, symmetrically about the vertical centerline, as far apart as practicable. See additional requirements in S10.17.1.1, S10.17.1.2, and S10.17.1.3.	Not less than 22 inches (55.9 cm) nor more than 54 inches (137.2 cm).	Steady burning, except that may be flashed for signaling purposes. The upper beam or the lower beam, but not both, may be wired to modulate from a higher intensity to a lower intensity in accordance with S10.17.5
Turn Signal Lamps	2 Amber. None required on a motor driven cycle whose speed attainable in 1 mile is 30 mph or less.	At or near the front, at the same height, symmetrically about the vertical centerline, and having a minimum horizontal separation distance (centerline of lamps) of 16 inches. Minimum edge to edge separation distance between a turn signal lamp and headlamp is 4 inches.	Not less than 15 inches, nor more than 83 inches.	Flash when the turn signal flasher is actuated by the turn signal operating unit.

TABLE I–c—REQUIRED LAMPS AND REFLECTIVE DEVICES—Continued

Lighting device	Number and color	Mounting location	Mounting height	Device activation
	2 Amber or red. None required on a motor driven cycle whose speed attainable in 1 mile is 30 mph or less.	At or near the rear, at the same height, symmetrically about the vertical centerline, and having a minimum horizontal separation distance (centerline to centerline of lamps) of 9 inches. Minimum edge to edge separation distance between the turn signal lamp and the taillamp or stop lamp is 4 inches, when a single stop and taillamp is installed on the vertical centerline and the turn signal lamps are red.		
Taillamps	1 Red	On the rear, on the vertical centerline except that if two are used, they must be symmetrically disposed about the vertical centerline.	Not less than 15 inches, nor more than 72 inches.	Steady burning. Must be activated when the headlamps are activated in a steady burning state.
Stop Lamps	1 Red	On the rear, on the vertical centerline except that if two are used, they must be symmetrically disposed about the vertical centerline.	Not less than 15 inches, nor more than 72 inches.	Steady burning. Must be activated upon application of the service brakes. When optically combined with a turn signal lamp, the circuit must be such that the stop signal cannot be activated if the turn signal lamp is flashing. May also be activated by a device designed to retard the motion of the vehicle.
Reflex Reflectors	2 Amber	On each side as far to the front as practicable.	Not less than 15 inches, nor more than 60 inches.	Not applicable.
	2 Red	On each side as far to the rear as practicable.		
	1 Red	On the rear, on the vertical centerline except that, if two are used on the rear, they must be symmetrically disposed about the vertical centerline.		
License Plate Lamp	1 White	On the rear to illuminate license plate.	No requirement	Steady burning.
	Additional lamps permitted to meet requirements.			Must be activated when the headlamps are activated in a steady burning state.

* * * * *

TABLE III—MARKING REQUIREMENTS LOCATION

Lamp, reflective device, or other component	Marking	Marking location	Requirement
HEADLAMPS, BEAM CONTRIBUTORS, OR HEADLAMP REPLACEABLE LENS.			
	"DOT"	Lens	S6.5.1
	Optical axis marking	See requirement	S10.18.5
	Manufacturer name and/or trademark	Lens	S6.5.3
	Voltage	See requirement	S6.5.3
	Part number or trade number	See requirement	S6.5.3
HEADLAMP REPLACEABLE LENS	Manufacturer identification	Lens	S6.5.3
	Headlamp identification.		
REPLACEABLE BULB HEADLAMPS	"U" or "L" (4 lamp system)	Lens	S10.15.4
	Replaceable bulb type	Lens	S6.5.3.4
SEALED BEAM HEADLAMPS	"sealed beam"	Lens	S6.5.3.3
	Type designation	See requirements	S6.5.3.3
INTEGRAL BEAM HEADLAMPS	"U" or "L" (4 lamp system)	Lens	S10.14.4
MOTORCYCLE REPLACEABLE BULB HEADLAMPS.	"motorcycle"	Lens	S10.17.2
VISUALLY/OPTICALLY AIMED HEADLAMPS.	"VOR" or "VOL" or "VO"	Lens	S10.18.9.6
EXTERNALLY AIMED HEADLAMPS	Aim pad location & "H" or "V"	Lens	S10.18.7.1
VEHICLE HEADLAMP AIMING DEVICES (VHAD).	Aiming scale(s)	See requirement	S10.18.8
(HEADLAMP) REPLACEABLE LIGHT SOURCES.	"DOT"	See requirement	S11.1
	Replaceable light source designation	See requirement.	
	Manufacturer name and/or trademark	See requirement.	
REPLACEABLE LIGHT SOURCE BALLASTS.	Manufacturer name or logo	See requirement	S11.2
	Part number.		
	Light source identification.		
	Rated laboratory life.		
	High voltage warning.		
	Output in watts and volts.		
	"DOT".		
LAMPS (OTHER THAN HEADLAMPS), REFLECTIVE DEVICES, AND ASSOCIATED EQUIPMENT.	"DOT"	See requirement	S6.5.1.2
DAYTIME RUNNING LAMPS (DRL)	"DRL"	Lens	S6.5.2
CONSPICUITY REFLEX REFLECTORS	"DOT–C"	Exposed surface	S8.2.2.1
RETROREFLECTIVE SHEETING	"DOT–C2" or "DOT–C3" or "DOT–C4"	Exposed surface	S8.2.1.3

TABLE IV–a—EFFECTIVE PROJECTED LUMINOUS LENS AREA REQUIREMENTS

Lighting device	Passenger cars, multipurpose passenger vehicles, trucks, trailers, and buses of less than 2032 mm in overall width minimum effective projected luminous lens area (sq mm)			Multipurpose passenger vehicles, trucks, trailers, and buses 2032 mm or more in overall width minimum effective projected luminous lens area each lamp (sq mm)	Motorcycles minimum effective projected luminous lens area (sq mm)	
					Multiple compartment lamp or multiple lamps	
	Single compartment lamp	Multiple compartment lamp or multiple lamps			Each compartment or lamp	Single or combined compartments or lamps
		Each compartment or lamp	Combined compartments or lamps			
Front turn signal lamp	2200		2200	7500	2200	2258
Rear turn signal lamp	5000	2200	5000	7500	2200	2258
Stop lamp	5000	2200	5000	7500	2200	[1] 5000

[1] A motor driven cycle whose speed attainable in 1 mile is 30 mph or less may be equipped with a stop lamp whose minimum effective projected luminous lens area is not less than 2258 sq mm.

TABLE IV–b—EFFECTIVE PROJECTED LUMINOUS LENS AREA REQUIREMENTS

Lighting device	Passenger cars, multipurpose passenger vehicles, trucks, and buses of less than 2032 mm in overall width and with a GVWR of 10,000 lbs or less using a single lamp minimum effective projected luminous lens area (sq mm)	Multipurpose passenger vehicles, trucks, and buses of less than 2032 mm in overall width and with a GVWR of 10,000 lbs or less using dual lamps of identical size and shape minimum effective projected luminous lens area each lamp (sq mm)
High-mounted stop lamp	2903	1452

TABLE IV–c—EFFECTIVE PROJECTED LUMINOUS LENS AREA REQUIREMENTS

Lighting device	School bus minimum effective projected luminous lens area each lamp (sq mm)
School bus signal lamp	12,258

TABLE V–a—VISIBILITY REQUIREMENTS OF INSTALLED LIGHTING DEVICES

Lighting device	Required visibility
Backup lamp	Lamps must be mounted so that the optical center of at least one lamp is visible from any eye point elevation from at least 1828 mm (6 ft) to 610 mm (2 ft) above the horizontal plane on which the vehicle is standing; and from any position in the area, rearward of a vertical plane perpendicular to the longitudinal axis of the vehicle, 914 mm (3 ft), to the rear of the vehicle and extending 914 mm (3 ft) beyond each side of the vehicle.
High-mounted stop lamp	Signal must be visible to the rear through a horizontal angle from 45° to the left to 45° to the right of the longitudinal axis of the vehicle. (Single lamp or two lamps together where required by S6.1.1.2 of this standard).
School bus signal lamp	Signal of front lamps to the front and rear lamps to the rear must be unobstructed within area bounded by 5° up to 10° down and 30° left to 30° right.

* * * * *

TABLE V–d—VISIBILITY REQUIREMENTS OF INSTALLED LIGHTING DEVICES (LEGACY VISIBILITY ALTERNATIVE)

Lighting device		Required visibility [1]
Turn signal lamp	All passenger cars, multipurpose passenger vehicles, trucks, buses, motorcycles, and trailers of less than 2032 mm overall width.	Unobstructed minimum effective projected luminous lens area of 1250 sq mm through horizontal angle of H–V to H–45° OB.
	All multipurpose passenger vehicles, trucks, buses, and trailers of 2032 mm or more overall width.	Unobstructed minimum effective projected luminous lens area of 1300 sq mm through horizontal angle of H–V to H–45° OB. Where more than one lamp or optical area is lighted on each side of the vehicle, only one such area on each side need comply.
Stop lamp		Unobstructed minimum effective projected luminous lens area of 1250 sq mm through horizontal angle of H–45° IB to H–45° OB. Where more than one lamp or optical area is lighted on each side of the vehicle, only one such area on each side need comply.
Taillamp		Unobstructed minimum effective projected luminous lens area of 2 sq in through horizontal angle of H–45° IB to H–45° OB. Where more than one lamp or optical area is lighted on each side of the vehicle, only one such area on each side need comply.

[1] IB indicates an inboard direction (toward the vehicle's longitudinal centerline) and OB indicates an outboard direction.

* * * * *

BILLING CODE 4910–59–P

TABLE VIII: TAILLAMP PHOTOMETRY REQUIREMENTS

GROUP NUMBER	TEST POINT (degrees)		PHOTOMETRIC INTENSITY[1][2][4] (cd)						GROUP MINIMUM PHOTOMETRIC INTENSITY[1][2] (cd)		
			Lighted Sections						Lighted Sections		
			1		2		3		1	2	3
			MINIMUM	MAXIMUM	MINIMUM	MAXIMUM	MINIMUM	MAXIMUM			
1	20L	5U	0.3	18	0.5	20	0.7	25	1.4	2.4	3.5
		5D	0.3	-	0.5	-	0.7	-			
	5L	10U	0.4	18	0.7	20	1.0	25			
		10D[3]	0.4	-	0.7	-	1.0	-			
2	10L	5U	0.8	18	1.4	20	2.0	25	2.4	4.2	6.0
		H	0.8	18	1.4	20	2.0	25			
		5D	0.8	-	1.4	-	2.0	-			
3	V	5U	1.8	18	3.1	20	4.5	25	9.6	16.8	24.0
	5L	H	2.0	18	3.5	20	5.0	25			
	V		2.0	18	3.5	20	5.0	25			
	5R		2.0	18	3.5	20	5.0	25			
	V	5D	1.8	-	3.1	-	4.5	-			
4	10R	5U	0.8	18	1.4	20	2.0	25	2.4	4.2	6.0
		H	0.8	18	1.4	20	2.0	25			
		5D	0.8	-	1.4	-	2.0	-			
5	5R	10U	0.4	18	0.7	20	1.0	25	1.4	2.4	3.5
		10D[3]	0.4	-	0.7	-	1.0	-			
	20R	5U	0.3	18	0.5	20	0.7	25			
		5D	0.3	-	0.5	-	0.7	-			

(1) The photometric intensity values between test points must not be less than the lower specified minimum value of the two closest adjacent test points on a horizontal or vertical line.

(2) If the sum of intensity values for all points in the group is not less than the specified total value for the group, the measured intensity value for each individual test point is not required to meet the minimum value.

(3) Where taillamps are mounted with their axis of reference less than 750 mm above the road surface, photometry requirements below 5º down may be met at 5º down rather than at the specified required downward angle.

(4) A taillamp shall not exceed the maximum intensity at H or above.

TABLE IX: STOP LAMP PHOTOMETRY REQUIREMENTS

GROUP NUMBER	TEST POINT (degrees)		MINIMUM PHOTOMETRIC INTENSITY RATIO WHERE COMBINED WITH A TAIL LAMP[5]	MINIMUM PHOTOMETRIC INTENSITY[1][2] (cd) Lighted Sections			GROUP MINIMUM PHOTOMETRIC INTENSITY (cd) Lighted Sections		
				1	2	3	1	2	3
1	20L	5U	3	10	12	15	50	60	70
		5D	3	10	12	15			
	5L	10U	3	16	19	22			
		10D[4]	3	16	19	22			
2	10L	5U	3	30	35	40	100	115	135
		H	3	40	47	55			
		5D	3	30	35	40			
3	V	5U	5	70	82	95	380	445	520
	5L	H	3/5[6]	80	95	110			
	V		5	80	95	110			
	5R		5	80	95	110			
	V	5D	3	70	82	95			
4	10R	5U	3	30	35	40	100	115	135
		H	3	40	47	55			
		5D	3	30	35	40			
5	5R	10U	3	16	19	22	50	60	70
		10D[4]	3	16	19	22			
	20R	5U	3	10	12	15			
		5D	3	10	12	15			
MAXIMUM PHOTOMETRIC INTENSITY[3]				300	360	420			

(1) The measured values at each test point must not be less than 60% of the minimum value.
(2) The photometric intensity values between test points must not be less than the lower specified minimum value of the two closest adjacent test points on a horizontal or vertical line.
(3) The maximum photometric intensity must not occur over any area larger than that generated by a 0.5° radius within a solid angle defined by the test point range

(4) Where stop lamps are mounted with their axis of reference less than 750 mm above the road surface, photometry requirements below 5º down may be met at 5º down rather than at the specified required downward angle.

(5) When a taillamp is combined with a stop lamp and the maximum luminous intensity of the taillamp is located below horizontal and within an area generated by a 0.5° radius around a test point (1.0° radius on lamps installed on a vehicle 2032 mm or more in overall width), the ratio for the test point may be computed by using the lowest value of the taillamp luminous intensity within the generated area.

(6) Values followed by a slash (/) apply only to lamps installed on multipurpose passenger vehicles, trucks, trailers, and buses of 2032 mm or more in overall width.

*****

TABLE XII: BACKUP LAMP PHOTOMETRY REQUIREMENTS

GROUP NUMBER	TEST POINT (degrees)		MAXIMUM PHOTOMETRIC INTENSITY (cd) ANY SINGLE LAMP	TWO LAMP SYSTEMS – EACH LAMP		SINGLE LAMP SYSTEM	
				MINIMUM PHOTOMETRIC INTENSITY (cd)[1][4]	GROUP MINIMUM PHOTOMETRIC INTENSITY (cd)	MINIMUM PHOTOMETRIC INTENSITY (cd)[1][4]	GROUP MINIMUM PHOTOMETRIC INTENSITY (cd)
1[2][3]	45L	5U	300/600[5]	15	45	30	90
		H	300/600[5]	15		30	
		5D	-	15		30	
2[2][3]	30L	H	300/600[5]	25	50	50	100
		5D	-	25		50	
3	10L	10U	300/600[5]	10	100	20	200
		5U	300/600[5]	20		40	
	V	10U	300/600[5]	15		30	
		5U	300/600[5]	25		50	
	10R	10U	300/600[5]	10		20	
		5U	300/600[5]	20		40	
4	10L	H	300/600[5]	50	360	100	720
		5D	-	50		100	
	V	H	300/600[5]	80		160	
		5D	-	80		160	
	10R	H	300/600[5]	50		100	
		5D	-	50		100	
5[2][3]	30R	H	300/600[5]	25	50	50	100
		5D	-	25		50	
6[2][3]	45R	5U	300/600[5]	15	45	30	90
		H	300/600[5]	15		30	
		5D	-	15		30	

(1) The photometric intensity values between test points must not be less than the lower specified minimum value of the two closest adjacent test points on a horizontal or vertical line.

(2) When two lamps of the same or symmetrically opposite design are used, the tested photometric values along the vertical axis and the averages of the tested photometric values for the same horizontal test point left and right of vertical for one lamp must be used to determine compliance with the requirements.

(3) When two lamps of differing designs are used, they must be tested individually and the tested photometric values added to determine the combined units compliance with twice the stated requirements.

(4) If the sum of intensity values for all points in the group is not less than the specified total value for the group, the measured intensity value for each individual test point is not required to meet the minimum value.

(5) The value before the slash applies to each lamp in a multiple lamp system; the value after the slash applies to a single lamp system.

*****

TABLE XIV: PARKING LAMP PHOTOMETRY REQUIREMENTS

GROUP NUMBER	TEST POINT (degrees)		MINIMUM PHOTOMETRIC INTENSITY[(1)(2)] (cd)	MAXIMUM PHOTOMETRIC INTENSITY (cd)	GROUP MINIMUM PHOTOMETRIC INTENSITY (cd)
1	20L	5U	0.4	125	2.4
		5D	0.4	250	
	5L	10U	0.8	125	
		10D[(3)]	0.8	250	
2	10L	5U	0.8	125	3.0
		H	1.4	125	
		5D	0.8	250	
3	V	5U	2.8	125	16.8
	5L	H	3.6	125	
	V		4.0	125	
	5R		3.6	125	
	V	5D	2.8	250	
4	10R	5U	0.8	125	3.0
		H	1.4	125	
		5D	0.8	250	
5	5R	10U	0.8	125	2.4
		10D[(3)]	0.8	250	
	20R	5U	0.4	125	
		5D	0.4	250	

(1) The photometric intensity values between test points must not be less than the lower specified minimum value of the two closest adjacent test points on a horizontal or vertical line.

(2) If the sum of intensity values for all points in the group is not less than the specified total value for the group, the measured intensity value for each individual test point is not required to meet the minimum value.

(3) Where parking lamps are mounted with their axis of reference less than 750 mm above the road surface, photometry requirements below 5º down may be met at 5º down rather than at the specified required downward angle.

TABLE XV: HIGH-MOUNTED STOP LAMP PHOTOMETRY REQUIREMENTS

GROUP NUMBER	TEST POINT (degrees)		MINIMUM PHOTOMETRIC INTENSITY[1][2][3] (cd)	GROUP MINIMUM PHOTOMETRIC INTENSITY[3] (cd)
1	V	5U	25	125
	5L	H	25	
	V	H	25	
	5R	H	25	
	V	5D	25	
2	5R	5U	25	98
	10R	5U	16	
	10R	H	16	
	10R	5D	16	
	5R	5D	25	
3	5L	5U	25	98
	10L	5U	16	
	10L	H	16	
	10L	5D	16	
	5L	5D	25	
4	10L	10U	8	32
	V	10U	16	
	10R	10U	8	
MAXIMUM PHOTOMETRIC INTENSITY[4]			160	

(1) The photometric intensity values between test points must not be less than the lower specified minimum value of the two closest adjacent test points on a horizontal or vertical line.

(2) The photometric intensity at each test point must not be less than 60% of the specified minimum value when considering overall group photometry tables.

(3) Where a pair of lamps identical in size and shape are used due to vehicle construction, they together must meet photometric requirements.

(4) The maximum photometric intensity must not occur over any area larger than that generated by a 0.25º radius within a solid cone angle within the rectangle bounded by test points 10U-10L, 10U-10R, 5D-10L, and 5D-10R.

*****

TABLE XIX-a: HEADLAMP LOWER BEAM PHOTOMETRY REQUIREMENTS

TEST POINT (degrees)		LOWER BEAM # 1M (LB1M)		LOWER BEAM # 1V (LB1V)		LOWER BEAM # 2M (LB2M)		LOWER BEAM # 2V (LB2V)	
		MAXIMUM PHOTOMETRIC INTENSITY (cd)	MINIMUM PHOTOMETRIC INTENSITY (cd)	MAXIMUM PHOTOMETRIC INTENSITY (cd)	MINIMUM PHOTOMETRIC INTENSITY (cd)	MAXIMUM PHOTOMETRIC INTENSITY (cd)	MINIMUM PHOTOMETRIC INTENSITY (cd)	MAXIMUM PHOTOMETRIC INTENSITY (cd)	MINIMUM PHOTOMETRIC INTENSITY (cd)
(1) 10U to 90U	(1) 90L to 90R	125	-	125	-	125	-	125	
4U	8L & 8R	-	64	-	64	-	64	--	64
2U	4L	-	135	-	135	-	135	-	135
1.5U	1R to 3R	-	200	-	200	-	200	-	200
1.5U	1R to R	1,400	-	1,400	-	1,400	-	1,400	-
1U	1.5L to L	700	-	700	-	700	-	700	-
0.5U	1.5L to L	1,000	-	1,000	-	1,000	-	1,000	-
0.5U	1R to 3R	2,700	500	2,700	500	2,700	500	2,700	500
H	V	5,000	-	5,000	-	-	-	-	-
H	4L	-	135	-	135	-	135	-	135
H	8L	-	64	-	64	-	64	-	64
0.5D	1.5L to L	3,000	-	-	-	3,000	-	-	-
0.5D	1.5R	20,000	10,000	-	-	20,000	10,000	-	-
0.6D	1.3R	-	-	-	10,000	-	-	-	10,000
0.86D	V	-	-	-	4,500	-	-	-	4,500
0.86D	3.5L	-	-	12,000	1,800	-	-	12,000	1,800
1D	6L	-	1,000	-	-	-	1,000	-	-
1.5D	2R	-	15,000	-	15,000	-	15,000	-	15,000
1.5D	9L & 9R	-	1,000	-	-	-	1,000	-	-
2D	9L & 9R	-	-	-	1,250	-	-	-	1,250
2D	15L & 15R	-	850	-	1,000	-	850	-	1,000
2.5D	V	-	-	-	-	-		-	-
2.5D	12L & 12R	-	-	-	-	-	-	-	-
4D	V	7,000	-	10,000	-	-	-	-	-
4D	4R	12,500	-	12,500	-	12,500	-	12,500	-
4D	20L & 20R	-	-	-	300	-	-	-	300

(1) These test points are boundaries, intensity values within this boundary must meet the listed photometry requirement.

TABLE XIX-b: HEADLAMP LOWER BEAM PHOTOMETRY REQUIREMENTS

TEST POINT (degrees)		LOWER BEAM #3 M (LB3M)		LOWER BEAM # 3V (LB3V)		LOWER BEAM # 4M (LB4M)		LOWER BEAM # 5M (LB5M)	
		MAXIMUM PHOTOMETRIC INTENSITY (cd)	MINIMUM PHOTOMETRIC INTENSITY (cd)	MAXIMUM PHOTOMETRIC INTENSITY (cd)	MINIMUM PHOTOMETRIC INTENSITY (cd)	MAXIMUM PHOTOMETRIC INTENSITY (cd)	MINIMUM PHOTOMETRIC INTENSITY (cd)	MAXIMUM PHOTOMETRIC INTENSITY (cd)	MINIMUM PHOTOMETRIC INTENSITY (cd)
(1) 10U to 90U	(1) 90L to 90R	125	-	125	-	125	-	125	-
4U	8L & 8R	-	64	-	64	-	64	-	64
2U	4L	-	135	-	135	-	135	-	135
1.5U	1R to 3R	-	200	-	200	-	200	-	200
1.5U	1R to R	1,400	-	1,400	-	1,400	-	1,400	--
1U	1.5L to L	700	-	700	-	700	-	700	-
0.5U	1.5L to L	1,000	-	1,000	-	1,000	-	1,000	-
0.5U	1R to 3R	2,700	500	2,700	500	2,700	500	2,700	500
H	V	-	-	-	-	-	-	5,000	-
H	4L	-	135	-	135	-	135	-	135
H	8L	-	64	-	64	-	64	-	64
0.5D	1.5L to L	2,500	-	-	-	2500	-	3,000	-
0.5D	1.5R	20,000	8,000	-	-	20,000	8,000	20,000	10,000
0.6D	1.3R	-		-	10,000	-	-	-	-
0.86D	V	-	--	-	4,500	-	-	-	-
0.86D	3.5L	-	-	12,000	1,800	-	-	-	-
1D	6L	-	750	-	-	-	750	-	1,000
1.5D	2R	-	15,000	-	15,000	-	15,000	-	15,000
1.5D	9L & 9R	-	750	-	-	-	750	-	1,000
2D	9L & 9R	-	-	-	1,250	-	-	-	-
2D	15L & 15R	-	700	-	1,000	-	700	-	850
2.5D	V	-	-	-	-	-	-	-	2,500
2.5D	12L & 12R	-	-	-	-	-	-	-	1,000
4D	V	-	-	-	-	-	-	7,000	-
4D	4R	12,500	-	12,500	-	12,500	-	12,500	-
4D	20L & 20R	-	-	-	300	-	-	-	-

(1) These test points are boundaries, intensity values within this boundary must meet the listed photometry requirement.

*
*
*
*
*

TABLE XIX-c: HEADLAMP LOWER BEAM PHOTOMETRY REQUIREMENTS			
TEST POINT (degrees)		LOWER BEAM # 4 V (LB4V)	
		MAXIMUM PHOTOMETRIC INTENSITY (cd)	MINIMUM PHOTOMETRIC INTENSITY (cd)
(1) 10U to 90U	(1) 90L to 90R	125	-
4U	8L & 8R	-	64
2U	4L	-	135
1.5U	1R to 3R	-	200
1.5U	1R to R	1,400	-
1U	1.5L to L	700	-
0.5U	1.5L to L	1,000	-
0.5U	1R to 3R	2,700	500
H	V	5,000	-
H	4L	-	135
H	8L	-	64
0.5D	1.5L to L	-	-
0.5D	1.5R	-	-
0.6D	1.3R	-	10,000
0.86D	V	-	4,500
0.86D	3.5L	12,000	1,800
1D	6L	-	-
1.5D	2R	-	15,000
1.5D	9L & 9R	--	-
2D	9L & 9R	-	1,250
2D	15L & 15R	-	1,000
2.5D	V	-	2,500
2.5D	12L & 12R	-	1,000
4D	V	10,000	-
4D	4R	12,500	-
4D	20L & 20R	-	300

(1) These test points are boundaries, intensity values within this boundary must meet the listed photometry requirement.

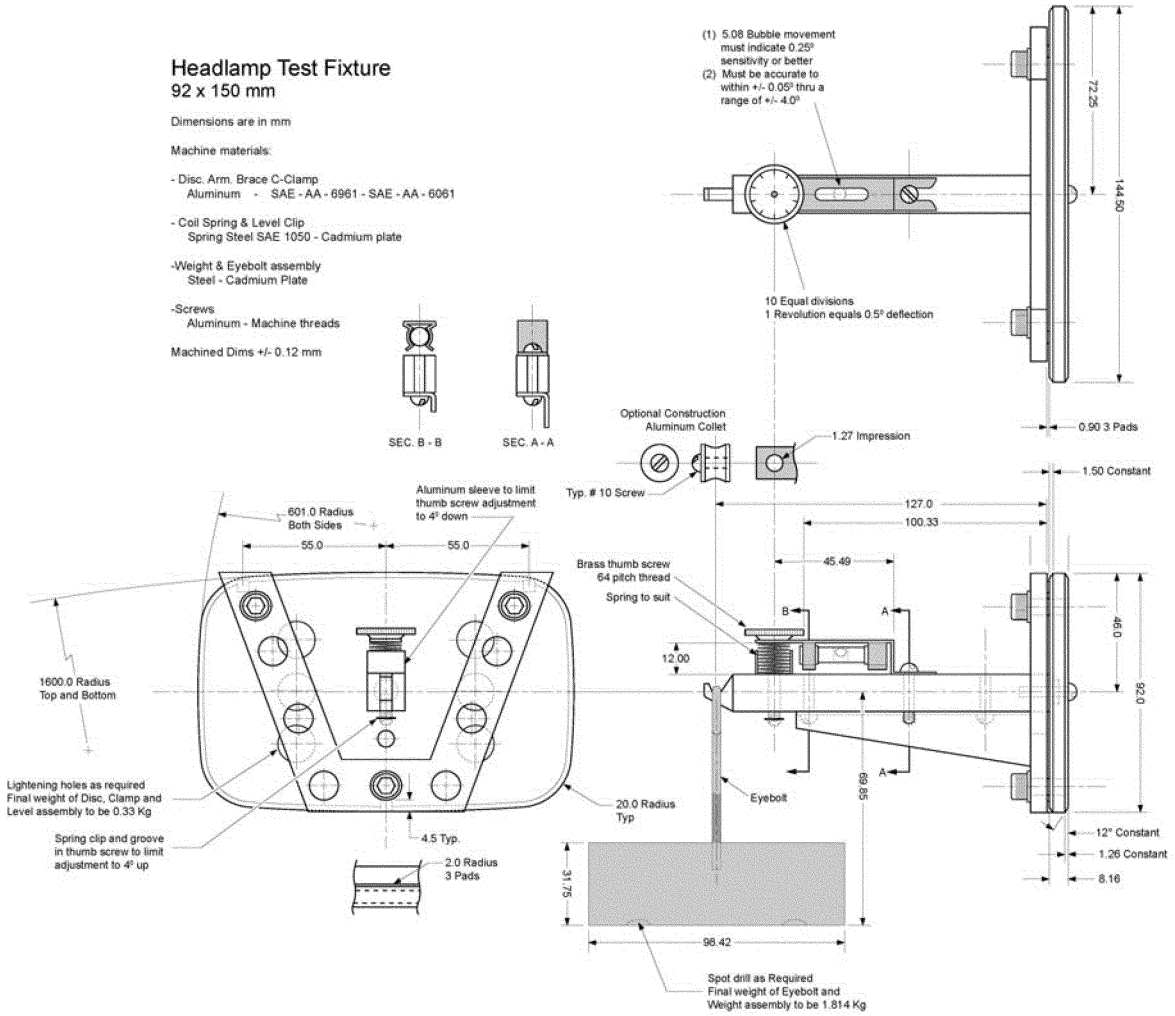

92 x 150 mm HEADLAMP AIM DEFLECTION TEST SETUP

FIGURE 14

Issued: July 27, 2011.

David L. Strickland,

Administrator.

[FR Doc. 2011–19595 Filed 8–5–11; 8:45 am]

BILLING CODE 4910–59–C

Proposed Rules

Federal Register
Vol. 76, No. 152
Monday, August 8, 2011

This section of the FEDERAL REGISTER contains notices to the public of the proposed issuance of rules and regulations. The purpose of these notices is to give interested persons an opportunity to participate in the rule making prior to the adoption of the final rules.

DEPARTMENT OF TRANSPORTATION

Federal Aviation Administration

14 CFR Part 39

[Docket No. FAA–2011–0816; Directorate Identifier 2011–CE–022–AD]

RIN 2120–AA64

Airworthiness Directives; Costruzioni Aeronautiche Tecnam srl Model P2006T Airplanes

AGENCY: Federal Aviation Administration (FAA), Department of Transportation (DOT).

ACTION: Notice of proposed rulemaking (NPRM).

SUMMARY: We propose to adopt a new airworthiness directive (AD) for the products listed above. This proposed AD results from mandatory continuing airworthiness information (MCAI) originated by an aviation authority of another country to identify and correct an unsafe condition on an aviation product. The MCAI describes the unsafe condition as:

Damaged lower skin of the fuselage aft tail cone was found during a preflight inspection of a P2006T aeroplane. This damage was caused by the lower lid of the emergency accumulator for the extension of the landing gear. The lid had detached from the emergency accumulator, violently hitting the lower skin of the fuselage aft tail cone and damaging the accumulator cylinder.

This condition, if not detected and corrected, could impair the aeroplane structural integrity and jeopardize the landing gear emergency extension in case of system failure in normal mode.

The proposed AD would require actions that are intended to address the unsafe condition described in the MCAI.

DATES: We must receive comments on this proposed AD by September 22, 2011.

ADDRESSES: You may send comments by any of the following methods:

- *Federal eRulemaking Portal:* Go to *http://www.regulations.gov.* Follow the instructions for submitting comments.
- *Fax:* (202) 493–2251.
- *Mail:* U.S. Department of Transportation, Docket Operations, M–30, West Building Ground Floor, Room W12–140, 1200 New Jersey Avenue, SE., Washington, DC 20590.
- *Hand Delivery:* U.S. Department of Transportation, Docket Operations, M–30, West Building Ground Floor, Room W12–140, 1200 New Jersey Avenue, SE., Washington, DC 20590, between 9 a.m. and 5 p.m., Monday through Friday, except Federal holidays.

For service information identified in this AD, contact Costruzioni Aeronautiche TECNAM Airworthiness Office, Via Maiorise—81043 Capua (CE) Italy; telephone: +39 0823 620134; fax: +39 0823 622899; e-mail: *m.oliva@tecnam.com, p.violetti@tecnam.com;* Internet: *http://www.tecnam.com.* You may review copies of the referenced service information at the FAA, Small Airplane Directorate, 901 Locust, Kansas City, Missouri 64106. For information on the availability of this material at the FAA, call (816) 329–4148; e-mail: *albert.mercado@faa.gov.*

Examining the AD Docket

You may examine the AD docket on the Internet at *http://www.regulations.gov;* or in person at the Docket Management Facility between 9 a.m. and 5 p.m., Monday through Friday, except Federal holidays. The AD docket contains this proposed AD, the regulatory evaluation, any comments received, and other information. The street address for the Docket Office (telephone (800) 647–5527) is in the **ADDRESSES** section. Comments will be available in the AD docket shortly after receipt.

FOR FURTHER INFORMATION CONTACT: Albert Mercado, Aerospace Engineer, FAA, Small Airplane Directorate, 901 Locust, Room 301, Kansas City, Missouri 64106; telephone: (816) 329–4119; fax: (816) 329–4090.

SUPPLEMENTARY INFORMATION:

Comments Invited

We invite you to send any written relevant data, views, or arguments about this proposed AD. Send your comments to an address listed under the **ADDRESSES** section. Include ''Docket No. FAA–2011–0816; Directorate Identifier 2011–CE–022–AD'' at the beginning of your comments. We specifically invite comments on the overall regulatory, economic, environmental, and energy aspects of this proposed AD. We will consider all comments received by the closing date and may amend this proposed AD because of those comments.

We will post all comments we receive, without change, to *http://regulations.gov,* including any personal information you provide. We will also post a report summarizing each substantive verbal contact we receive about this proposed AD.

Discussion

The European Aviation Safety Agency (EASA), which is the Technical Agent for the Member States of the European Community, has issued EASA AD No.: 2011–0063–E, dated April 6, 2011 (referred to after this as ''the MCAI''), to correct an unsafe condition for the specified products. The MCAI states:

Damaged lower skin of the fuselage aft tail cone was found during a preflight inspection of a P2006T aeroplane. This damage was caused by the lower lid of the emergency accumulator for the extension of the landing gear. The lid had detached from the emergency accumulator, violently hitting the lower skin of the fuselage aft tail cone and damaging the accumulator cylinder.

This condition, if not detected and corrected, could impair the aeroplane structural integrity and jeopardize the landing gear emergency extension in case of system failure in normal mode.

For the above described reasons, EASA AD 2011–0059–E required an inspection of the emergency accumulator cylinder for absence of crack, deformation or oil leakage, and the accomplishment of the applicable corrective actions.

This AD, which supersedes EASA AD 2011–0059–E partially retaining its requirements, reduces the compliance time for the required inspection, as other failures of the emergency accumulator have occurred since AD 2011–0059–E was issued.

This AD is considered to be an interim measure and, after approval of a modification already designed by the Type Certificate holder, further AD actions may follow.

You may obtain further information by examining the MCAI in the AD docket.

Relevant Service Information

Costruzioni Aeronautiche Tecnam has issued Service Bulletin No. SB 047–CS, Revision 1, dated April 4, 2011. The actions described in this service information are intended to correct the unsafe condition identified in the MCAI.

FAA's Determination and Requirements of the Proposed AD

This product has been approved by the aviation authority of another country, and is approved for operation in the United States. Pursuant to our bilateral agreement with this State of Design Authority, they have notified us of the unsafe condition described in the MCAI and service information referenced above. We are proposing this AD because we evaluated all information and determined the unsafe condition exists and is likely to exist or develop on other products of the same type design.

Differences Between This Proposed AD and the MCAI or Service Information

We have reviewed the MCAI and related service information and, in general, agree with their substance. But we might have found it necessary to use different words from those in the MCAI to ensure the AD is clear for U.S. operators and is enforceable. In making these changes, we do not intend to differ substantively from the information provided in the MCAI and related service information.

We might also have proposed different actions in this AD from those in the MCAI in order to follow FAA policies. Any such differences are highlighted in a NOTE within the proposed AD.

Costs of Compliance

We estimate that this proposed AD will affect 3 products of U.S. registry. We also estimate that it would take about 1 work-hour per product to comply with the basic requirements of this proposed AD. The average labor rate is $85 per work-hour.

Based on these figures, we estimate the cost of the proposed AD on U.S. operators to be $255, or $85 per product.

In addition, we estimate that any necessary follow-on actions would take about 1 work-hour and require parts costing $800, for a cost of $885 per product. We have no way of determining the number of products that may need these actions.

Authority for This Rulemaking

Title 49 of the United States Code specifies the FAA's authority to issue rules on aviation safety. Subtitle I, section 106, describes the authority of the FAA Administrator. ''Subtitle VII: Aviation Programs,'' describes in more detail the scope of the Agency's authority.

We are issuing this rulemaking under the authority described in ''Subtitle VII, Part A, Subpart III, Section 44701: General requirements.'' Under that section, Congress charges the FAA with promoting safe flight of civil aircraft in air commerce by prescribing regulations for practices, methods, and procedures the Administrator finds necessary for safety in air commerce. This regulation is within the scope of that authority because it addresses an unsafe condition that is likely to exist or develop on products identified in this rulemaking action.

Regulatory Findings

We determined that this proposed AD would not have federalism implications under Executive Order 13132. This proposed AD would not have a substantial direct effect on the States, on the relationship between the national Government and the States, or on the distribution of power and responsibilities among the various levels of government.

For the reasons discussed above, I certify this proposed regulation:

1. Is not a ''significant regulatory action'' under Executive Order 12866;

2. Is not a ''significant rule'' under the DOT Regulatory Policies and Procedures (44 FR 11034, February 26, 1979); and

3. Will not have a significant economic impact, positive or negative, on a substantial number of small entities under the criteria of the Regulatory Flexibility Act.

We prepared a regulatory evaluation of the estimated costs to comply with this proposed AD and placed it in the AD docket.

List of Subjects in 14 CFR Part 39

Air transportation, Aircraft, Aviation safety, Incorporation by reference, Safety.

The Proposed Amendment

Accordingly, under the authority delegated to me by the Administrator, the FAA proposes to amend 14 CFR part 39 as follows:

PART 39—AIRWORTHINESS DIRECTIVES

1. The authority citation for part 39 continues to read as follows:

Authority: 49 U.S.C. 106(g), 40113, 44701.

§ 39.13 [Amended]

2. The FAA amends § 39.13 by adding the following new AD:

Costruzioni Aeronautiche Tecnam srl: Docket No. FAA–2011–0816; Directorate Identifier 2011–CE–022–AD.

Comments Due Date

(a) We must receive comments by September 22, 2011.

Affected ADs

(b) None.

Applicability

(c) This AD applies to Costruzioni Aeronautiche Tecnam srl P2006T airplanes, serial number (S/N) 001/US through S/N 065/US, certificated in any category.

Subject

(d) Air Transport Association of America (ATA) Code 32: Landing Gear.

Reason

(e) The mandatory continuing airworthiness information (MCAI) states:

Damaged lower skin of the fuselage aft tail cone was found during a preflight inspection of a P2006T aeroplane. This damage was caused by the lower lid of the emergency accumulator for the extension of the landing gear. The lid had detached from the emergency accumulator, violently hitting the lower skin of the fuselage aft tail cone and damaging the accumulator cylinder.

This condition, if not detected and corrected, could impair the aeroplane structural integrity and jeopardize the landing gear emergency extension in case of system failure in normal mode.

For the above described reasons, EASA AD 2011–0059–E required an inspection of the emergency accumulator cylinder for absence of crack, deformation or oil leakage, and the accomplishment of the applicable corrective actions.

This AD, which supersedes EASA AD 2011–0059–E partially retaining its requirements, reduces the compliance time for the required inspection, as other failures of the emergency accumulator have occurred since AD 2011–0059–E was issued.

This AD is considered to be an interim measure and, after approval of a modification already designed by the Type Certificate holder, further AD actions may follow.

Actions and Compliance

(f) Unless already done, before further flight after the effective date of this AD, do the following actions following Costruzioni Aeronautiche Tecnam Service Bulletin No. SB 047–CS, Edition 1, Revision 1, dated April 4, 2011:

(1) Inspect the emergency accumulator part number (P/N) 22–9–610–000 for cracks, deformities, or oil leaks.

(2) If during the inspection required by paragraph (f)(1) of this AD any cracks, deformities, or oil leaks are found, before further flight, replace the emergency accumulator P/N 22–9–610–000 with a serviceable part, following the instructions in Costruzioni Aeronautiche Tecnam P2006T Maintenance Manual, 2nd Edition, Revision 1, dated April 27, 2011, Chapter 29–10, paragraph 5.

FAA AD Differences

Note: This AD differs from the MCAI and/or service information as follows: No differences.

Other FAA AD Provisions

(g) The following provisions also apply to this AD:

(1) *Alternative Methods of Compliance (AMOCs):* The Manager, Standards Office, FAA, has the authority to approve AMOCs

for this AD, if requested using the procedures found in 14 CFR 39.19. Send information to ATTN: Albert Mercado, Aerospace Engineer, FAA, Small Airplane Directorate, 901 Locust, Room 301, Kansas City, Missouri 64106; telephone: (816) 329–4119; fax: (816) 329–4090; e-mail: *albert.mercado@faa.gov.* Before using any approved AMOC on any airplane to which the AMOC applies, notify your appropriate principal inspector (PI) in the FAA Flight Standards District Office (FSDO), or lacking a PI, your local FSDO.

(2) *Airworthy Product:* For any requirement in this AD to obtain corrective actions from a manufacturer or other source, use these actions if they are FAA-approved. Corrective actions are considered FAA-approved if they are approved by the State of Design Authority (or their delegated agent). You are required to assure the product is airworthy before it is returned to service.

(3) *Reporting Requirements:* For any reporting requirement in this AD, a federal agency may not conduct or sponsor, and a person is not required to respond to, nor shall a person be subject to a penalty for failure to comply with a collection of information subject to the requirements of the Paperwork Reduction Act unless that collection of information displays a current valid OMB Control Number. The OMB Control Number for this information collection is 2120–0056. Public reporting for this collection of information is estimated to be approximately 5 minutes per response, including the time for reviewing instructions, completing and reviewing the collection of information. All responses to this collection of information are mandatory. Comments concerning the accuracy of this burden and suggestions for reducing the burden should be directed to the FAA at: 800 Independence Ave., SW., Washington, DC 20591, Attn: Information Collection Clearance Officer, AES–200.

Related Information

(h) Refer to MCAI European Aviation Safety Agency (EASA) AD No.: 2011–0063–E, dated April 6, 2011; Costruzioni Aeronautiche Tecnam Service Bulletin No. SB 047–CS, Revision 1, dated April 4, 2011; and Costruzioni Aeronautiche Tecnam P2006T Maintenance Manual, 2nd Edition, Revision 1, dated April 7, 2011, Chapter 29–10, paragraph 5 for related information. For service information related to this AD, contact Costruzioni Aeronautiche TECNAM Airworthiness Office, Via Maiorise—81043 Capua (CE) Italy; telephone: +39 0823 620134; fax: +39 0823 622899; e-mail: *m.oliva@tecnam.com, p.violetti@tecnam.com;* Internet: *http://www.tecnam.com.* You may review copies of the referenced service information at the FAA, Small Airplane Directorate, 901 Locust, Kansas City, Missouri 64106. For information on the availability of this material at the FAA, call (816) 329–4148.

Issued in Kansas City, Missouri, on July 27, 2011.

Steven W. Thompson,

Acting Manager, Small Airplane Directorate, Aircraft Certification Service.

[FR Doc. 2011–20037 Filed 8–5–11; 8:45 am]

BILLING CODE 4910–13–P

DEPARTMENT OF TRANSPORTATION

Federal Aviation Administration

14 CFR Part 39

[Docket No. FAA–2011–0811; Directorate Identifier 2011–CE–026–AD]

RIN 2120–AA64

Airworthiness Directives; Diamond Aircraft Industries Powered Sailplanes

AGENCY: Federal Aviation Administration (FAA), Department of Transportation (DOT).

ACTION: Notice of proposed rulemaking (NPRM).

SUMMARY: We propose to adopt a new airworthiness directive (AD) for Diamond Aircraft Industries Model H–36 ''DIMONA'' powered sailplanes. This proposed AD results from mandatory continuing airworthiness information (MCAI) originated by an aviation authority of another country to identify and correct an unsafe condition on an aviation product. The MCAI describes the unsafe condition as:

A report has been received of a failed air brake control system torsion tube on a Diamond (formerly Hoffman) H 36 powered sailplane. The results of the subsequent investigation show that the failure was due to corrosion damage.

This condition, if not detected and corrected, may lead to failure of the air brake control system in flight, resulting in reduced control of the aeroplane.

The proposed AD would require actions that are intended to address the unsafe condition described in the MCAI.

DATES: We must receive comments on this proposed AD by September 22, 2011.

ADDRESSES: You may send comments by any of the following methods:

- Federal eRulemaking Portal: Go to *http://www.regulations.gov.* Follow the instructions for submitting comments.
- Fax: (202) 493–2251.
- Mail: U.S. Department of Transportation, Docket Operations, M–30, West Building Ground Floor, Room W12–140, 1200 New Jersey Avenue, SE., Washington, DC 20590.
- Hand Delivery: U.S. Department of Transportation, Docket Operations, M–30, West Building Ground Floor, Room W12–140, 1200 New Jersey Avenue, SE., Washington, DC 20590, between 9 a.m. and 5 p.m., Monday through Friday, except Federal holidays.

For service information identified in this proposed AD, contact Diamond Aircraft Industries GmbH, N.A. Otto-Straße 5, A–2700 Wiener Neustadt, Austria, telephone: +43 2622 26700; fax: +43 2622 26780; e-mail: *office@diamond-air.at;* Internet: *http://www.diamond-air.at.* You may review copies of the referenced service information at the FAA, Small Airplane Directorate, 901 Locust, Kansas City, Missouri 64106. For information on the availability of this material at the FAA, call (816) 329–4148.

Examining the AD Docket

You may examine the AD docket on the Internet at *http://www.regulations.gov;* or in person at the Docket Management Facility between 9 a.m. and 5 p.m., Monday through Friday, except Federal holidays. The AD docket contains this proposed AD, the regulatory evaluation, any comments received, and other information. The street address for the Docket Office (telephone (800) 647–5527) is in the **ADDRESSES** section. Comments will be available in the AD docket shortly after receipt.

FOR FURTHER INFORMATION CONTACT: Jim Rutherford, Aerospace Engineer, FAA, Small Airplane Directorate, 901 Locust, Room 301, Kansas City, Missouri 64106; telephone: (816) 329–4165; fax: (816) 329–4090; e-mail: *jim.rutherford@faa.gov.*

SUPPLEMENTARY INFORMATION:

Comments Invited

We invite you to send any written relevant data, views, or arguments about this proposed AD. Send your comments to an address listed under the **ADDRESSES** section. Include ''Docket No. FAA–2011–0811; Directorate Identifier 2011–CE–026–AD'' at the beginning of your comments. We specifically invite comments on the overall regulatory, economic, environmental, and energy aspects of this proposed AD. We will consider all comments received by the closing date and may amend this proposed AD because of those comments.

We will post all comments we receive, without change, to *http://regulations.gov,* including any personal information you provide. We will also post a report summarizing each substantive verbal contact we receive about this proposed AD.

Discussion

The European Aviation Safety Agency (EASA), which is the Technical Agent for the Member States of the European Community, has issued AD No. 2011–0110, dated June 16, 2011 (referred to after this as ''the MCAI''), to correct an unsafe condition for the specified products. The MCAI states:

A report has been received of a failed air brake control system torsion tube on a Diamond (formerly Hoffman) H 36 powered sailplane. The results of the subsequent investigation show that the failure was due to corrosion damage.

This condition, if not detected and corrected, may lead to failure of the air brake control system in flight, resulting in reduced control of the aeroplane.

To address this unsafe condition, Diamond published Mandatory Service Bulletin (MSB) 36–105, containing instructions to test and inspect the air brake control system torsion tube for corrosion damage and, depending on findings, the application of anticorrosive agent to the inside of the torsion tube, or replacement of the torsion tube with a serviceable part.

For the reasons described above, this new AD requires repetitive tests and inspections of the air brake control system torsion tube and applicable corrective actions, depending on findings.

You may obtain further information by examining the MCAI in the AD docket.

Relevant Service Information

Diamond Aircraft Industries GmbH has issued Service Bulletin No. MSB 36–105/1, dated May 2, 2011, and Work Instruction WI–MSB 36–105, dated April 21, 2011. The actions described in this service information are intended to correct the unsafe condition identified in the MCAI.

FAA's Determination and Requirements of the Proposed AD

This product has been approved by the aviation authority of another country, and is approved for operation in the United States. Pursuant to our bilateral agreement with this State of Design Authority, they have notified us of the unsafe condition described in the MCAI and service information referenced above. We are proposing this AD because we evaluated all information and determined the unsafe condition exists and is likely to exist or develop on other products of the same type design.

Differences Between This Proposed AD and the MCAI or Service Information

We have reviewed the MCAI and related service information and, in general, agree with their substance. But we might have found it necessary to use different words from those in the MCAI to ensure the AD is clear for U.S. operators and is enforceable. In making these changes, we do not intend to differ substantively from the information provided in the MCAI and related service information.

We might also have proposed different actions in this AD from those in the MCAI in order to follow FAA policies. Any such differences are highlighted in a NOTE within the proposed AD.

Costs of Compliance

We estimate that this proposed AD will affect 9 products of U.S. registry. We also estimate that it would take about 4.5 work-hours per product to comply with the basic requirements of this proposed AD. The average labor rate is $85 per work-hour. Required parts would cost about $172 per product.

Based on these figures, we estimate the cost of the proposed AD on U.S. operators to be $4,990.50, or $554.50 per product.

In addition, we estimate that any necessary follow-on actions would take about 5 work-hours and require parts costing $275, for a cost of $700 per product. We have no way of determining the number of products that may need these actions.

Authority for This Rulemaking

Title 49 of the United States Code specifies the FAA's authority to issue rules on aviation safety. Subtitle I, section 106, describes the authority of the FAA Administrator. ''Subtitle VII: Aviation Programs,'' describes in more detail the scope of the Agency's authority.

We are issuing this rulemaking under the authority described in ''Subtitle VII, Part A, Subpart III, Section 44701: General requirements.'' Under that section, Congress charges the FAA with promoting safe flight of civil aircraft in air commerce by prescribing regulations for practices, methods, and procedures the Administrator finds necessary for safety in air commerce. This regulation is within the scope of that authority because it addresses an unsafe condition that is likely to exist or develop on products identified in this rulemaking action.

Regulatory Findings

We determined that this proposed AD would not have federalism implications under Executive Order 13132. This proposed AD would not have a substantial direct effect on the States, on the relationship between the national Government and the States, or on the distribution of power and responsibilities among the various levels of government.

For the reasons discussed above, I certify this proposed regulation:

1. Is not a ''significant regulatory action'' under Executive Order 12866;

2. Is not a ''significant rule'' under the DOT Regulatory Policies and Procedures (44 FR 11034, February 26, 1979); and

3. Will not have a significant economic impact, positive or negative, on a substantial number of small entities under the criteria of the Regulatory Flexibility Act.

We prepared a regulatory evaluation of the estimated costs to comply with this proposed AD and placed it in the AD docket.

List of Subjects in 14 CFR Part 39

Air transportation, Aircraft, Aviation safety, Incorporation by reference, Safety.

The Proposed Amendment

Accordingly, under the authority delegated to me by the Administrator, the FAA proposes to amend 14 CFR part 39 as follows:

PART 39—AIRWORTHINESS DIRECTIVES

1. The authority citation for part 39 continues to read as follows:

Authority: 49 U.S.C. 106(g), 40113, 44701.

§ 39.13 [Amended]

2. The FAA amends § 39.13 by adding the following new AD:

Diamond Aircraft Industries: Docket No. FAA–2011–0811; Directorate Identifier 2011–CE–026–AD.

Comments Due Date

(a) We must receive comments by September 22, 2011.

Affected ADs

(b) None.

Applicability

(c) This AD applies to Diamond Aircraft Industries Model H–36 ''DIMONA'' powered sailplanes, all serial numbers, certificated in any category.

Subject

(d) Air Transport Association of America (ATA) Code 27: Flight Controls.

Reason

(e) The mandatory continuing airworthiness information (MCAI) states:

A report has been received of a failed air brake control system torsion tube on a Diamond (formerly Hoffman) H 36 powered sailplane. The results of the subsequent investigation show that the failure was due to corrosion damage.

This condition, if not detected and corrected, may lead to failure of the air brake control system in flight, resulting in reduced control of the aeroplane.

To address this unsafe condition, Diamond published Mandatory Service Bulletin (MSB) 36–105, containing instructions to test and inspect the air brake control system torsion tube for corrosion damage and, depending on findings, the application of anticorrosive agent to the inside of the torsion tube, or replacement of the torsion tube with a serviceable part.

For the reasons described above, this new AD requires repetitive tests and inspections of the air brake control system torsion tube and applicable corrective actions, depending on findings.

Actions and Compliance

(f) Unless already done, do the following actions:

(1) Within the next 6 months after the effective date of this AD, remove, test, and inspect the air brake control system torsion tube for corrosion damage following Diamond Aircraft Industries GmbH Work Instruction WI–MSB 36–105, dated April 21, 2011, as specified in Diamond Aircraft Industries GmbH Service Bulletin No. MSB 36–105/1, dated May 2, 2011.

(2) If corrosion damage is found during the inspection required in paragraph (f)(1) of this AD or during any repetitive inspection required in paragraphs (f)(2) and (f)(3) of this AD, before further flight after the inspection in which corrosion damage is found, replace the affected torsion tube with a serviceable part. Before installation, apply an anticorrosive agent to the inside of the torsion tube. Do these required actions following Diamond Aircraft Industries GmbH Work Instruction WI–MSB 36–105, dated April 21, 2011. After replacement, repetitively thereafter at intervals not to exceed 60 months, remove, test, and inspect the newly installed air brake control system torsion tube for corrosion damage following the procedures specified in paragraph (f)(1) of this AD.

(3) If no corrosion damage is found during the inspection required in paragraph (f)(1) of this AD or during any repetitive inspection required in paragraphs (f)(2) and (f)(3) of this AD, before reinstalling the torsion tube, apply an anticorrosive agent to the inside of the torsion tube. Do these required actions following Diamond Aircraft Industries GmbH Work Instruction WI–MSB 36–105, dated April 21, 2011. Repetitively thereafter at intervals not to exceed 60 months, remove, test, and inspect the air brake control system torsion tube for corrosion damage following the procedures specified in paragraph (f)(1) of this AD.

(4) As of the effective date of this AD, do not install an air brake control system torsion tube on an affected airplane unless it has been inspected following the procedures specified in paragraph (f)(1) of this AD, is found to be corrosion free, and an anticorrosive agent has been applied to the inside of the tube as specified in Diamond Aircraft Industries GmbH Work Instruction WI–MSB 36–105, dated April 21, 2011.

Note 1: Credit will be given for the initial test and inspection required in paragraph (f)(1) of this AD and the corrective actions required in paragraphs (f)(2) and (f)(3) of this AD if already done before the effective date of this AD following Diamond Aircraft Industries GmbH Service Bulletin No. MSB 36–105, original issue.

FAA AD Differences

Note 2: This AD differs from the MCAI and/or service information as follows: No differences.

Other FAA AD Provisions

(g) The following provisions also apply to this AD:

(1) *Alternative Methods of Compliance (AMOCs):* The Manager, Standards Office, FAA, has the authority to approve AMOCs for this AD, if requested using the procedures found in 14 CFR 39.19. Send information to ATTN: Jim Rutherford, Aerospace Engineer, FAA, Small Airplane Directorate, 901 Locust, Room 301, Kansas City, Missouri 64106; telephone: (816) 329–4165; fax: (816) 329–4090; e-mail: *jim.rutherford@faa.gov.* Before using any approved AMOC on any airplane to which the AMOC applies, notify your appropriate principal inspector (PI) in the FAA Flight Standards District Office (FSDO), or lacking a PI, your local FSDO.

(2) *Airworthy Product:* For any requirement in this AD to obtain corrective actions from a manufacturer or other source, use these actions if they are FAA-approved. Corrective actions are considered FAA-approved if they are approved by the State of Design Authority (or their delegated agent). You are required to assure the product is airworthy before it is returned to service.

(3) *Reporting Requirements:* For any reporting requirement in this AD, a Federal agency may not conduct or sponsor, and a person is not required to respond to, nor shall a person be subject to a penalty for failure to comply with a collection of information subject to the requirements of the Paperwork Reduction Act unless that collection of information displays a current valid OMB Control Number. The OMB Control Number for this information collection is 2120–0056. Public reporting for this collection of information is estimated to be approximately 5 minutes per response, including the time for reviewing instructions, completing and reviewing the collection of information. All responses to this collection of information are mandatory. Comments concerning the accuracy of this burden and suggestions for reducing the burden should be directed to the FAA at: 800 Independence Ave. SW., Washington, DC 20591, Attn: Information Collection Clearance Officer, AES–200.

Related Information

(h) Refer to MCAI European Aviation Safety Agency (EASA) AD No. 2011–0110, dated June 16, 2011; Diamond Aircraft Industries GmbH Service Bulletin No. MSB 36–105/1, dated May 2, 2011; and Diamond Aircraft Industries GmbH Work Instruction WI–MSB 36–105, dated April 21, 2011, for related information. For service information related to this AD, contact Diamond Aircraft Industries GmbH, N.A. Otto-Straße 5, A–2700 Wiener Neustadt, Austria, telephone: +43 2622 26700; fax: +43 2622 26780; e-mail: *office@diamond-air.at;* Internet: *http://www.diamond-air.at.* You may review copies of the referenced service information at the FAA, Small Airplane Directorate, 901 Locust, Kansas City, Missouri 64106. For information on the availability of this material at the FAA, call (816) 329–4148.

Issued in Kansas City, Missouri, on July 26, 2011.

Steven W. Thompson,

Acting Manager, Small Airplane Directorate, Aircraft Certification Service.

[FR Doc. 2011–20038 Filed 8–5–11; 8:45 am]

BILLING CODE 4910–13–P

DEPARTMENT OF TRANSPORTATION

Federal Aviation Administration

14 CFR Part 39

[Docket No. FAA–2011–0723; Directorate Identifier 2010–NM–080–AD]

RIN 2120–AA64

Airworthiness Directives; Lockheed Martin Corporation/Lockheed Martin Aeronautics Company Model L–1011 Series Airplanes

AGENCY: Federal Aviation Administration (FAA), DOT.

ACTION: Notice of proposed rulemaking (NPRM).

SUMMARY: We propose to supersede an existing airworthiness directive (AD) that applies to Model L–1011–385–1, L–1011–385–1–14, and L–1011–385–1–15 airplanes. The existing AD currently requires implementation of a Supplemental Inspection Document (SID) program of structural inspections to detect fatigue cracking, and repair, if necessary, to ensure continued airworthiness of these airplanes as they approach the manufacturer's original fatigue design life goal. Since we issued that AD, an evaluation by the manufacturer of usage and flight data provided additional information about certain Structurally Significant Details (SSDs) where fatigue damage is likely to occur. This proposed AD would add airplanes to the applicability, change certain inspection thresholds, add three new SSDs, and remove an SSD that has been addressed by a different AD. We are proposing this AD to prevent fatigue cracking that could compromise the structural integrity of these airplanes.

DATES: We must receive comments on this proposed AD by September 22, 2011.

ADDRESSES: You may send comments by any of the following methods:

- *Federal eRulemaking Portal:* Go to *http://www.regulations.gov.* Follow the instructions for submitting comments.
- *Fax:* 202–493–2251.
- *Mail:* U.S. Department of Transportation, Docket Operations, M–30, West Building Ground Floor, Room W12–140, 1200 New Jersey Avenue SE., Washington, DC 20590.

• *Hand Delivery:* Deliver to Mail address above between 9 a.m. and 5 p.m., Monday through Friday, except Federal holidays.

For service information identified in this AD, contact Lockheed Martin Corporation/Lockheed Martin Aeronautics Company, Airworthiness Office, Dept. 6A0M, Zone 0252, Column P–58, 86 S. Cobb Drive, Marietta, Georgia 30063; phone: 770–494–5444; fax 770–494–5445; e-mail *ams.portal@lmco.com;* Internet *http://www.lockheedmartin.com/ams/tools/TechPubs.html.* You may review copies of the referenced service information at the FAA, Transport Airplane Directorate, 1601 Lind Avenue, SW., Renton, Washington. For information on the availability of this material at the FAA, call 425–227–1221.

Examining the AD Docket

You may examine the AD docket on the Internet at *http://www.regulations.gov;* or in person at the Docket Management Facility between 9 a.m. and 5 p.m., Monday through Friday, except Federal holidays. The AD docket contains this proposed AD, the regulatory evaluation, any comments received, and other information. The street address for the Docket Office (phone: 800–647–5527) is in the **ADDRESSES** section. Comments will be available in the AD docket shortly after receipt.

FOR FURTHER INFORMATION CONTACT: Carl Gray, Aerospace Engineer, Airframe Branch, ACE–117A, FAA, Atlanta Aircraft Certification Office (ACO), 1701 Columbia Avenue, College Park, Georgia 30337; phone: 404–474–5554; fax 404–474–5606; e-mail: *Carl.W.Gray@faa.gov.*

SUPPLEMENTARY INFORMATION:

Comments Invited

We invite you to send any written relevant data, views, or arguments about this proposed AD. Send your comments to an address listed under the **ADDRESSES** section. Include ''Docket No. FAA–2011–0723; Directorate Identifier 2010–NM–080–AD'' at the beginning of your comments. We specifically invite comments on the overall regulatory, economic, environmental, and energy aspects of this proposed AD. We will consider all comments received by the closing date and may amend this proposed AD because of those comments.

We will post all comments we receive, without change, to *http://www.regulations.gov,* including any personal information you provide. We will also post a report summarizing each substantive verbal contact we receive about this proposed AD.

Discussion

On December 5, 1995, we issued AD 95–20–04 R1, Amendment 39–9454 (60 FR 63414, December 11, 1995), for all Lockheed Model L–1011–385–1 series airplanes. That AD requires implementation of a Supplemental Inspection Document (SID) program of structural inspections to detect fatigue cracking, and repair, if necessary, to ensure continued airworthiness of these airplanes as they approach the manufacturer's original fatigue design life goal. That AD resulted from a structural re-evaluation by the manufacturer that identified certain structural details where fatigue damage is likely to occur. We issued that AD to prevent fatigue cracking that could compromise the structural integrity of these airplanes.

Actions Since Existing AD Was Issued

Since we issued AD 95–20–04 R1, an evaluation by the manufacturer of usage and flight data provided additional information about certain SSDs where fatigue damage is likely to occur. Therefore, this proposed AD changes certain inspection thresholds and intervals for Model L–1011–385–1, L–1011–385–1–14, and L–1011–385–1–15 airplanes, adds three new SSDs, and removes an SSD that has been addressed by AD 99–08–20, amendment 39–11128 (64 FR 18324, April 14, 1999). AD 99–08–20 requires repetitive inspections to detect cracking of the bulkhead web and cap at fuselage station 1363, and repair if necessary.

When we issued AD 95–20–04 R1, Model L–1011–385–3 airplanes were not included in the applicability. These long-range airplanes flew less frequently and were neither imminently approaching nor had exceeded the manufacturer's original fatigue design life goal. In the NPRM for AD 95–20–04, Amendment 39–9382 (60 FR 51713, October 3, 1995) we stated that as these airplanes accumulated more hours time-in-service, and as the critical area selection was developed and identified, we anticipated that these airplanes would be addressed in future rulemaking actions. We now have determined that further rulemaking is indeed necessary for these airplanes, and we have added them to the applicability of this proposed AD.

Relevant Service Information

We reviewed Lockheed Document Number LG92ER0060, ''L–1011–385 Series Supplemental Inspection Document,'' revised April 2009 (hereafter referred to as ''the Lockheed Document''). The Lockheed Document describes procedures for supplemental inspections of SSDs for all Model L–1011 series airplanes. The Lockheed Document identifies SSDs in fuselage, stabilizer, and wing-critical areas. The Lockheed Document changes certain inspection thresholds, adds Model L–1011–353–3 airplanes to the effectivity, adds SSDs 57–3–10, 57–3–11, 57–4–1C, and removes SSD 53–4–3. The Lockheed Document also specifies that operators submit the results of these inspections to Lockheed.

FAA's Determination

We are proposing this AD because we evaluated all the relevant information and determined the unsafe condition described previously is likely to exist or develop in other products of the same type design.

Proposed AD Requirements

This proposed AD would retain all requirements of AD 95–20–04 R1. This proposed AD would add Model L–1011–385–3 airplanes to the applicability, change certain inspection thresholds and intervals for Model L–1011–385–1, L–1011–385–1–14, and L–1011–385–1–15 airplanes, add three new SSDs for Model L–1011–385–3 airplanes, and remove an SSD that has been addressed by a different AD action. This proposed AD would also require accomplishing the actions specified in the service information described previously. This proposed AD would also require sending the inspection results to the manufacturer.

Change to Existing AD

This proposed AD would retain all requirements of AD 95–20–04 R1. Since AD 95–20–04 R1 was issued, the AD format has been revised, and certain paragraphs have been rearranged. As a result, the corresponding paragraph identifiers have changed in this proposed AD, as listed in the following table:

REVISED PARAGRAPH IDENTIFIERS

Requirement in AD 95–20–04	Corresponding requirement in this proposed AD
paragraph (a)	paragraph (g)
paragraph (b)	paragraph (n)
paragraph (c)	paragraph (o)

Costs of Compliance

We estimate that this proposed AD affects 26 airplanes of U.S. registry.

We estimate the following costs to comply with this proposed AD:

ESTIMATED COSTS

Action	Labor cost	Parts cost	Cost per product	Number of airplanes affected	Cost for U.S. operators
Incorporate SID into maintenance program [retained actions from existing AD].	550 work-hours × $85 per hour = $46,750.	$0	$46,750	26	$1,215,500.
Initial inspections [retained actions from existing AD].	245 work-hours × $85 per hour = $20,825.	0	$20,825	26	$541,450.
Repetitive inspections [retained actions from existing AD].	52 work-hours × $85 per hour = $4,420 per inspection cycle.	0	$4,420 per inspection cycle.	26	$114,920 per inspection cycle.
Incorporate SID into maintenance program [new proposed action for Model L–1011–385–3 airplanes].	1 work-hour × $85 = $85	0	$85	2	$170.
Initial inspections [new proposed action for Model L–1011–385–3 airplanes].	48 work-hours × $85 per hour = $4,080.	0	$4,080	2	$8,160.
Repetitive inspections [new proposed action for Model L–1011–385–3 airplanes].	44 work-hours × $85 per hour = $3,740 per inspection cycle.	0	$3,740 per inspection cycle.	2	$7,480 per inspection cycle.

Authority for This Rulemaking

Title 49 of the United States Code specifies the FAA's authority to issue rules on aviation safety. Subtitle I, Section 106, describes the authority of the FAA Administrator. Subtitle VII, Aviation Programs, describes in more detail the scope of the Agency's authority.

We are issuing this rulemaking under the authority described in Subtitle VII, Part A, Subpart III, Section 44701, ''General requirements.'' Under that section, Congress charges the FAA with promoting safe flight of civil aircraft in air commerce by prescribing regulations for practices, methods, and procedures the Administrator finds necessary for safety in air commerce. This regulation is within the scope of that authority because it addresses an unsafe condition that is likely to exist or develop on products identified in this rulemaking action.

Regulatory Findings

We have determined that this proposed AD would not have federalism implications under Executive Order 13132. This proposed AD would not have a substantial direct effect on the States, on the relationship between the national Government and the States, or on the distribution of power and responsibilities among the various levels of government.

For the reasons discussed above, I certify that the proposed regulation:

(1) Is not a ''significant regulatory action'' under Executive Order 12866,

(2) Is not a ''significant rule'' under the DOT Regulatory Policies and Procedures (44 FR 11034, February 26, 1979),

(3) Will not affect intrastate aviation in Alaska, and

(4) Will not have a significant economic impact, positive or negative, on a substantial number of small entities under the criteria of the Regulatory Flexibility Act.

List of Subjects in 14 CFR Part 39

Air transportation, Aircraft, Aviation safety, Incorporation by reference, Safety.

The Proposed Amendment

Accordingly, under the authority delegated to me by the Administrator, the FAA proposes to amend 14 CFR part 39 as follows:

PART 39—AIRWORTHINESS DIRECTIVES

1. The authority citation for part 39 continues to read as follows:

Authority: 49 U.S.C. 106(g), 40113, 44701.

§ 39.13 [Amended]

2. The FAA amends § 39.13 by removing airworthiness directive (AD) 95–20–04 R1, Amendment 39–9454 (60 FR 63414, December 11, 1995), and adding the following new AD:

Lockheed Martin Corporation/Lockheed Martin Aeronautics Company: Docket No. FAA–2011–0723; Directorate Identifier 2010–NM–080–AD.

Comments Due Date

(a) The FAA must receive comments on this AD action by September 22, 2011.

Affected ADs

(b) This AD supersedes AD 95–20–04 R1, Amendment 39–9454.

Applicability

(c) All Lockheed Martin Corporation/Lockheed Martin Aeronautics Company Model L–1011–385–1, L–1011–385–1–14, L–1011–385–1–15, and L–1011–385–3 airplanes, certificated in any category.

Subject

(d) Joint Aircraft System Component (JASC)/Air Transport Association (ATA) of America Code 53, Fuselage.

Unsafe Condition

(e) This AD was prompted by an evaluation by the manufacturer of usage and flight data that provided additional information about certain Structurally Significant Details (SSDs) where fatigue damage is likely to occur. We are issuing this AD to prevent fatigue cracking that could compromise the structural integrity of these airplanes.

Compliance

(f) Comply with this AD within the compliance times specified, unless already done.

Restatement of the Requirements of AD 95–20–04 R1: Revision and Inspections

(g) For Model L–1011–385–1, L–1011–385–1–14, and L–1011–385–1–15 airplanes: Within 12 months after November 2, 1995 (the effective date of AD 95–20–04 R1), incorporate a revision into the maintenance inspection program which provides for inspection(s) of the structurally significant details (SSD) defined in Lockheed Document

Number LG92ER0060, ''L–1011–385 Series Supplemental Inspection Document,'' revised January 1994. Doing the revision required by paragraph (h) of this AD terminates the requirement to revise the maintenance inspections program specified in this paragraph. Doing the inspections required by paragraph (i) of this AD terminates the corresponding inspection requirements of this paragraph.

(1) The initial inspection for each SSD must be performed at the later of the times specified in paragraph (g)(1)(i) or (g)(1)(ii) of this AD.

(i) Within one repeat interval measured from November 2, 1996 (12 months after November 2, 1995).

(ii) Prior to the threshold specified in Lockheed Document Number LG92ER0060, ''L–1011–385 Series Supplemental Inspection Document,'' revised January 1994, for that SSD.

(2) A 10 percent deviation from the repetitive interval specified in Lockheed Document Number LG92ER0060, ''L–1011–385 Series Supplemental Inspection Document,'' revised January 1994, for that SSD is acceptable to allow for planning and scheduling time.

(3) If Lockheed Document Number LG92ER0060, ''L–1011–385 Series Supplemental Inspection Document,'' revised January 1994, specifies that inspection of any SSD be performed at every ''C'' check, those inspections must be performed at intervals not to exceed 5,000 hours time-in-service or 2,500 flight cycles, whichever occurs earlier.

(4) If Lockheed Document Number LG92ER0060, ''L–1011–385 Series Supplemental Inspection Document,'' revised January 1994, specifies either the initial inspection or the repetitive inspection intervals for any SSD in terms of flight hours or flight cycles, the inspection shall be performed prior to the earlier of the terms (whichever occurs first on the airplane: either accumulated number of flight hours, or accumulated number of flight cycles).

(5) The non-destructive inspection techniques referenced in Appendix VI of Lockheed Document Number LG92ER0060, ''L–1011–385 Series Supplemental Inspection Document,'' revised January 1994, provide acceptable methods for accomplishing the inspections required by paragraph (g) of this AD.

New Requirements of this AD: New Revision

(h) For all airplanes: Within 12 months after the effective date of this AD, incorporate a revision into the maintenance inspection program which provides for inspection(s) of the SSDs defined in Lockheed Document Number LG92ER0060, ''L–1011–385 Series Supplemental Inspection Document,'' revised April 2009. Doing this revision terminates the requirement to revise the maintenance inspection program as specified in paragraph (g) of this AD.

Threshold and Intervals

(i) For all airplanes: Do all applicable inspections specified in Lockheed Document Number LG92ER0060, ''L–1011–385 Series Supplemental Inspection Document,'' revised April 2009. Do the initial inspection or next repetitive inspection at the applicable time specified in paragraphs (i)(1) and (i)(2) of this AD, except as provided by paragraphs (j), (k), and (l) of this AD. Repeat the inspections thereafter in accordance with the intervals and actions specified in Lockheed Document Number LG92ER0060, ''L–1011–385 Series Supplemental Inspection Document,'' revised April 2009, except as provided by paragraphs (j), (k), and (l) of this AD. The non-destructive inspection techniques referenced in Lockheed Document Number LG92ER0060, ''L–1011–385 Series Supplemental Inspection Document,'' revised April 2009, provide acceptable methods for accomplishing the inspections required by this AD. Doing the inspections required by this paragraph of this AD terminates the corresponding inspection requirements of paragraph (g) of this AD.

(1) For Model L–1011–385–3 airplanes; and for Model L–1011–385–1, L–1011–385–1–14, and L–1011–385–1–15 airplanes on which the initial inspection required by paragraph (g) of this AD has not been accomplished before the effective date of this AD: Do the initial inspection at the later of the times specified in paragraphs (i)(1)(i) and (i)(1)(ii) of this AD.

(i) Within one repeat interval measured from a date 12 months after the effective date of this AD.

(ii) Before the threshold specified for that SSD in Lockheed Document Number LG92ER0060, ''L–1011–385 Series Supplemental Inspection Document,'' revised April 2009.

(2) For Model L–1011–385–1, L–1011–385–1–14, and L–1011–385–1–15 airplanes on which the initial inspection required by paragraph (g) of this AD has been accomplished before the effective date of this AD: Do the next repetitive inspection at the earlier of the times specified in paragraphs (i)(2)(i) and (i)(2)(ii) of this AD.

(i) Within the next repetitive inspection interval specified in Lockheed Document Number LG92ER0060, ''L–1011–385 Series Supplemental Inspection Document,'' revised January 1994, for that SSD.

(ii) Within one repeat interval measured from a date 12 months after the effective date of this AD; or within the next repetitive interval specified in Lockheed Document Number LG92ER0060, ''L–1011–385 Series Supplemental Inspection Document,'' revised April 2009, for that SSD; whichever occurs later.

Exceptions to Threshold and Intervals

(j) For all airplanes: A 10 percent deviation from the repetitive interval specified in Lockheed Document Number LG92ER0060, ''L–1011–385 Series Supplemental Inspection Document,'' revised April 2009, for that SSD is acceptable to allow for planning and scheduling time.

(k) For all airplanes: Where Lockheed Document Number LG92ER0060, ''L–1011–385 Series Supplemental Inspection Document,'' revised April 2009, specifies that inspection of any SSD be performed at every ''C'' check, those inspections must be performed at intervals not to exceed 5,000 flight hours or 2,500 flight cycles, whichever occurs earlier.

(l) For all airplanes: Where Lockheed Document Number LG92ER0060, ''L–1011–385 Series Supplemental Inspection Document,'' revised April 2009, specifies either the initial inspection or the repetitive inspection intervals for any SSD in terms of flight hours or flight cycles, the inspection must be performed prior to the earlier of the terms (whichever occurs first on the airplane: either accumulated number of flight hours, or accumulated number of flight cycles).

Exception to Inspection Procedure

(m) For all airplanes: There should be no repair or modification work done in the inspection area before the initial inspections required by paragraph (i) of this AD; any changes in the inspection area could affect the inspection procedure.

Repair

(n) For all airplanes: If any cracking is found in any SSD during any inspection required by this AD, prior to further flight, repair in accordance with paragraph (n)(1), (n)(2), or (n)(3) of this AD:

(1) In accordance with the applicable service bulletin referenced in Lockheed Document Number LG92ER0060, ''L–1011–385 Series Supplemental Inspection Document,'' revised January 1994; or revised April 2009. After doing the revision required by paragraph (h) of this AD, repair in accordance with the applicable service bulletin referenced in Lockheed Document Number LG92ER0060, ''L–1011–385 Series Supplemental Inspection Document,'' revised April 2009.

(2) In accordance with the Structural Repair Manual or in accordance with Lockheed L–1011 Structural Repair Manual, Revision 80, dated December 15, 2009. As of the effective date of this AD, use Lockheed L–1011 Structural Repair Manual, Revision 80, dated December 15, 2009.

(3) In accordance with a method approved by the Manager, Atlanta Aircraft Certification Office (ACO), FAA.

Reporting

(o) For all airplanes: At the later of the times specified in paragraphs (o)(1) and (o)(2) of this AD, submit a report of the results (positive or negative) of the inspection(s) to Lockheed in accordance with Section V., Data Reporting System (DRS), of the applicable Lockheed Document specified in paragraph (o)(1) of this AD. Under the provisions of the Paperwork Reduction Act (44 U.S.C. 3501 *et seq.*), the Office of Management and Budget (OMB) has approved the information collection requirements contained in this AD and has assigned OMB Control Number 2120–0056.

(1) Within 30 days after returning the airplane to service, subsequent to accomplishment of the inspection(s) specified in Lockheed Document Number LG92ER0060, ''L–1011–385 Series Supplemental Inspection Document,'' revised January 1994; or Lockheed Document Number LG92ER0060, ''L–1011–385 Series Supplemental Inspection Document,'' revised April 2009.

(2) Within 30 days after the effective date of this AD.

Paperwork Reduction Act Burden Statement

(p) A federal agency may not conduct or sponsor, and a person is not required to respond to, nor shall a person be subject to a penalty for failure to comply with a collection of information subject to the requirements of the Paperwork Reduction Act unless that collection of information displays a current valid OMB Control Number. The OMB Control Number for this information collection is 2120–0056. Public reporting for this collection of information is estimated to be approximately 5 minutes per response, including the time for reviewing instructions, completing and reviewing the collection of information. All responses to this collection of information are mandatory. Comments concerning the accuracy of this burden and suggestions for reducing the burden should be directed to the FAA at: 800 Independence Ave., SW., Washington, DC 20591, Attn: Information Collection Clearance Officer, AES–200.

Alternative Methods of Compliance (AMOCs)

(q)(1) The Manager, Atlanta ACO, FAA, has the authority to approve AMOCs for this AD, if requested using the procedures found in 14 CFR 39.19. In accordance with 14 CFR 39.19, send your request to your principal inspector or local Flight Standards District Office, as appropriate. If sending information directly to the manager of the ACO, send it to the attention of the person identified in the Related Information section of this AD.

(2) Before using any approved AMOC, notify your appropriate principal inspector, or lacking a principal inspector, the manager of the local flight standards district office/ certificate holding district office.

Related Information

(r) For more information about this AD, contact Carl Gray, Aerospace Engineer, Airframe Branch, ACE–117A, FAA, Atlanta Aircraft Certification Office (ACO), 1701 Columbia Avenue, College Park, Georgia 30337; phone: 404–474–5554; fax: 404–474–5606; e-mail: *Carl.W.Gray@faa.gov.*

(s) For service information identified in this AD, contact Lockheed Martin Corporation/Lockheed Martin Aeronautics Company, Airworthiness Office, Dept. 6A0M, Zone 0252, Column P–58, 86 S. Cobb Drive, Marietta, Georgia 30063; phone: 770–494–5444; fax: 770–494–5445; e-mail: *ams.portal@lmco.com;* Internet *http://www.lockheedmartin.com/ams/tools/TechPubs.htm.* You may review copies of the referenced service information at the FAA, Transport Airplane Directorate, 1601 Lind Avenue SW., Renton, Washington. For information on the availability of this material at the FAA, call 425–227–1221.

Issued in Renton, Washington, on July 29, 2011.

Ali Bahrami,

Manager, Transport Airplane Directorate, Aircraft Certification Service.

[FR Doc. 2011–19968 Filed 8–5–11; 8:45 am]

BILLING CODE 4910–13–P

CONSUMER PRODUCT SAFETY COMMISSION

16 CFR Part 1130

[CPSC Docket No. CPSC–2011–0053]

Consumer Registration of Durable Infant or Toddler Products

AGENCY: Consumer Product Safety Commission.

ACTION: Notice of proposed rulemaking.

SUMMARY: In accordance with section 104(d) of the Consumer Product Safety Improvement Act of 2008 (''CPSIA'') the Consumer Product Safety Commission (''Commission,'' ''CPSC,'' or ''we'') issued a final consumer product safety rule requiring manufacturers of durable infant or toddler products to establish a consumer registration program. The Commission is proposing an amendment to clarify and correct some of the requirements of the rule.

DATES: Written comments must be received by October 24, 2011.

ADDRESSES: You may submit comments, identified by Docket No. CPSC–2011–0053, by any of the following methods:

Electronic Submissions

Submit electronic comments in the following way:

Federal eRulemaking Portal: *http://www.regulations.gov.* Follow the instructions for submitting comments.

To ensure timely processing of comments, the Commission is no longer accepting comments submitted by electronic mail (e-mail), except through *http://www.regulations.gov.*

Written Submissions

Submit written submissions in the following way:

Mail/Hand delivery/Courier (for paper, disk, or CD–ROM submissions), preferably in five copies, to: Office of the Secretary, Consumer Product Safety Commission, Room 820, 4330 East West Highway, Bethesda, MD 20814; telephone (301) 504–7923.

Instructions: All submissions received must include the agency name and docket number for this rulemaking. All comments received may be posted without change, including any personal identifiers, contact information, or other personal information provided to *http://www.regulations.gov.* Do not submit confidential business information, trade secret information, or other sensitive or protected information electronically. Such information should be submitted in writing.

Docket: For access to the docket to read background documents or comments received go to *http://www.regulations.gov.*

FOR FURTHER INFORMATION CONTACT: Celestine T. Kiss, Project Manager, Division of Human Factors, Directorate for Engineering Sciences, Consumer Product Safety Commission, 4330 East West Highway, Bethesda, MD 20814; telephone (301) 504–7739; *ckiss@cpsc.gov.*

SUPPLEMENTARY INFORMATION:

A. Background

On December 29, 2009, we published a final rule requiring manufacturers of durable infant or toddler products to: (1) Provide with each product a postage-paid consumer registration form; (2) keep records of consumers who register such products with the manufacturer; and (3) permanently place the manufacturer's name and contact information, model name and number, and the date of manufacture on each such product. 74 FR 68668. The rule specified formatting and text requirements for the registration forms. Subsequently, we published a correction notice on February 22, 2010. 75 FR 7550. Since December 29, 2010, registration forms have been required for all durable infant or toddler products covered by the rule.

Some manufacturers and testing laboratories have brought to our attention the need to clarify or correct certain aspects of the rule. We are proposing this amendment for that purpose.

We note that, although manufacturers of durable infant or toddler products must comply with the registration requirements, they are not required to have a third party testing laboratory ''test'' their product's compliance with the registration requirements.

B. Proposed Clarifications and Corrections

1. Simplifying the Provisions for the Format and Text of Registration Forms (Proposed § 1130.6)

The rule specifies requirements for the format of registration forms in § 1130.6 and requirements for the text of registration forms in § 1130.7. Given the geometry of the registration forms, which have four surfaces (front, back, top, and bottom), we believe that it is confusing to explain the requirements in this way. Therefore, the proposed amendment would eliminate this framework, essentially collapsing the requirements from §§ 1130.6 and 1130.7 into one section and clarifying them. Proposed § 1130.6 would describe the registration form more clearly, moving logically from the front top of the form

to the front bottom of the form, to the back top of the form, and ending with the back bottom of the form. We believe that structuring the requirements this way will also align the text more closely with the illustration of the registration form in Figures 1 and 2. We are not eliminating any of the requirements for the registration forms but proposing to organize the requirements more clearly.

Restructuring the rule would require several corresponding changes. For example, the proposed rule would, in essence, combine the existing §§ 1130.6 and 1130.7 into a revised § 1130.6. The proposal would then renumber existing §§ 1130.8 and 1130.9 as §§ 1130.7 and 1130.8 respectively. Thus, any other sections in part 1130 that refer to §§ 1130.6 through 1130.9 (such as § 1130.3(a)(2), which refers to § 1130.9) would, themselves, need to be amended to reflect the renumbered sections.

2. Clarifying the Required Font Size (Proposed § 1130.6(b)(2))

Currently, § 1130.6(c) requires that registration forms use 12-point and 10-point type. Manufacturers and testing labs have reported confusion concerning the physical size required for the type. The dictionary defines a ''point'' as 1/72 of an inch. However, according to font charts, font sizes used in printing do not follow this formula and are actually smaller than this measurement.

To settle this confusion, the proposed amendment would specify the physical measurement of the type, rather than refer to ''point.'' For example, instead of requiring ''12-point'' type, the proposed amendment would require ''0.12-inch (3.0 mm) type.'' This change would be made in proposed § 1130.6(b)(2).

3. Changes To Clarify That Consumers Should Return the Bottom Part of the Form Only (Proposed § 1130.6(c)(1) and (d)(1))

The rule requires firms to provide a form at least the size of two standard postcards connected together by a perforated line so that the two portions can be separated. The consumer retains the top portion which contains a statement of the purpose of the card and the manufacturer's contact information. According to several manufacturers, consumers have been confused about what they need to return to the manufacturer, and some consumers have been sending in the entire form or the top portion of the form only.

Currently, § 1130.7(b) requires that the back of the top portion of the form state the manufacturer's name and contact information (a U.S. mailing address, a telephone number, toll-free, if available), among other things. The example shown in Figure 1 of the rule shows this information to be center justified, which makes this look like a mailing address.

To resolve this confusion, proposed § 1130.6(d)(1)(i) would specify that the manufacturer's name and contact information on the top portion of the form is to be stated in sentence format and appear underneath the heading: ''*Manufacturer's Contact Information.*'' In Figure 2 of the proposed amendment, the order of the manufacturer's contact information and the model name, model number, and manufacture date would be reversed from the order in the original Figure 2. This would place the manufacturer's contact information on top and further decrease the likelihood that a consumer would return the top part of the form.

In addition, proposed § 1130.6(d)(1)(ii) would add a new provision requiring that just above the perforation line, each form must state in capital letters: ''KEEP THIS TOP PART FOR YOUR RECORDS. FILL OUT AND RETURN BOTTOM PART.''

Finally, the proposed amendment would revise the wording in the purpose statement to clarify that consumers should mail the bottom part of the form. Currently, § 1130.7(a) and Figure 1 state: ''please complete and mail this card.'' Proposed § 1130.6(c)(1) and proposed Figure 1 would state: ''please complete and mail the bottom part of this card.''

4. Omitting Manufacturer's Name on the Back Bottom of the Form (Proposed § 1130.6(d)(2))

Currently, § 1130.7(d), as corrected in February 2010, requires that the bottom back portion of the form state the manufacturer's name with the product information. However, the illustration in Figure 2 of the rule does not show the manufacturer's name in this location. Some manufacturers have pointed out that there is limited space on this part of the form, and they have suggested that omitting the manufacturer's name would allow more space for the consumer's information. Others have indicated that the manufacturer's name may be useful on the back of the form when they use a third party to process the registration cards. Because the front of the bottom portion of the form will always have the manufacturer's name even when they use a third party to process the card, we believe it is not necessary to include the manufacturer's name at this location of the form. However, the Commission will allow a manufacturer to include its name on the back portion of the card if it wants to do so and further seeks comments on whether some additional latitude is necessary to assist firms using a third party vendor to process their registration cards.

Proposed § 1130.6(d)(2) would omit the requirement, currently in § 1130.7(d), that the manufacturer's name be stated along with the product information at the back bottom portion of the form. It would continue to allow a manufacturer to include its name on the card should it choose to do so.

5. Identifying a Third Party That Is Processing the Forms (Proposed § 1130.6(c)(2))

Currently, § 1130.6(b)(3) requires that the registration form be pre-addressed ''with the manufacturer's name and mailing address where registration information is to be collected.'' As discussed in the preamble to the final rule (74 FR at 68670), a manufacturer is allowed to contract with a third party who would be responsible for maintaining the registration information. Some manufacturers have asked whether the third party's name could appear in the mailing information on the form in these circumstances.

Proposed § 1130.6(c)(2) would specify that, if a manufacturer uses a third party to process the registration forms, the third party's name may be included as a ''c/o'' on the form.

6. Clarifying the Location Where Registration Information Is To Be Maintained (Proposed § 1130.8(d))

Several manufacturers have asked whether the consumer registration information they receive must be maintained at a location in the United States. The rule does not specifically address this issue.

Because so much data and information is kept electronically and can be retrieved quickly, we do not believe it is necessary to require that registration information be maintained in the United States. However, manufacturers must be able to access the information when requested. Therefore, proposed § 1130.8(d) would state that registration records shall be made available within 24 hours of a request by CPSC.

7. Correcting Text Requirement for Purpose Statement To Match Figure 1 (Proposed § 1130.6(c)(1))

Currently, § 1130.7(a) provides, in part, that: ''The front top portion of each form shall state 'PRODUCT REGISTRATION FOR SAFETY ALERT OR RECALL. We will use the information provided on this card to contact you only if there is a safety alert or recall for this product. We will not

sell, rent, or share your personal information. To register your product, please complete and mail this card or visit our online registration at *http://www.websitename.com*.''' There are two discrepancies between the wording of the text and the illustration in Figure 1.

To make the text and Figure 1 consistent, proposed § 1130.6(c)(1) would make two changes to the text. The word ''ONLY'' would be added at the end of the first sentence, and ''http//'' would be deleted from the Web site name.

C. Effective Date

This proposed amendment would clarify and correct several provisions of the consumer registration rule. It would not alter the substantive requirements of the existing rule. We recognize that manufacturers may have an existing inventory of registration forms. Because the proposed changes to the forms are minor and would not affect safety, we believe that it is appropriate to allow sufficient time for manufacturers to use their existing stock of registration forms before they must meet the amended requirements. Thus, we propose that this amendment would take effect 12 months after publication of a final rule. Until the proposed amendment takes effect, we would consider registration forms that meet either the existing rule or the proposed amendment to be in compliance.

D. Regulatory Flexibility Analysis or Certification

The Regulatory Flexibility Act (''RFA'') generally requires that agencies review proposed rules for their potential economic impact on small entities, including small businesses. However, section 104(d)(1) of the CPSIA removes this requirement for the rule implementing the CPSIA's consumer registration provision. Consequently, no regulatory flexibility analysis or certification is necessary for this proposed amendment clarifying and correcting the consumer registration rule. Moreover, the proposed changes are minor and would not alter the impact that the registration rule has on small entities.

E. Paperwork Reduction Act

Section 104(d)(1) of the CPSIA also excludes the consumer registration rule from requirements of the Paperwork Reduction Act, 44 U.S.C. sections 3501 through 3520. Consequently, no Paperwork Reduction Act analysis is necessary for this proposed amendment clarifying and correcting the consumer registration rule. Moreover, the proposed changes are minor and would not alter any collection of information required under the registration rule.

F. Environmental Considerations

The Commission's regulations provide a categorical exemption for the Commission's rules from any requirement to prepare an environmental assessment or an environmental impact statement as they ''have little or no potential for affecting the human environment.'' 16 CFR 1021.5(c)(2). This proposed amendment falls within the categorical exemption.

List of Subjects in 16 CFR 1130

Administrative practice and procedure, Business and industry, Consumer protection, Reporting and recordkeeping requirements.

Accordingly, we propose to amend 16 CFR part 1130 as follows:

PART 1130—REQUIREMENTS FOR CONSUMER REGISTRATION OF DURABLE INFANT OR TODDLER PRODUCTS

1. The authority citation for part 1130 continues to read as follows:

Authority: 15 U.S.C. 2056a, 2065(b).

§ 1130.3 [Amended]

2. In § 1130.3(a)(2), remove ''§ 1130.9'' and add in its place ''§ 1130.8''.

3. Section 1130.5 is amended as follows:

a. In § 1130.5 (a), remove ''and 1130.7''.

b. In § 1130.5 (f), remove ''1130.7(a)'' and add, in its place ''1130.6(c)(1)''.

4. Revise § 1130.6 to read as follows:

§ 1130.6 Requirements for format and text of registration forms.

(a) *Size of form.* The form shall be at least the size of two standard post cards connected with perforation for later separation, so that each of the two portions is at least 3½ inches high x 5 inches wide x 0.007 inches thick.

(b) *Layout of form*—(1) *General.* The form shall consist of four parts: top and bottom, divided by perforations for easy separation, and front and back.

(2) *Font size and typeface.* The registration form shall use bold black typeface. The size of the type shall be at least 0.12 in (3.0 mm) for the purpose statement required in § 1130.6(c)(1), and no less than 0.10 in (2.5 mm) for the other information in the registration form. The title of the purpose statement and the retention statement required in § 1130.6(d)(2) shall be in all capitals. All other information shall be in capital and lowercase type.

(c) *Front of form*—(1) *Top front of form: Purpose statement.* The top portion of the front of each form shall state: ''PRODUCT REGISTRATION FOR SAFETY ALERT OR RECALL ONLY. We will use the information provided on this card to contact you only if there is a safety alert or recall for this product. We will not sell, rent, or share your personal information. To register your product, please complete and mail the bottom part of this card, or visit our online registration at: *http://www.websitename.com*.'' Manufacturers that do not have a Web site may provide an e-mail address and state at the end of the purpose statement: ''To register your product, please complete and mail the bottom part of this card, or e-mail your contact information, the model name and number, and date of manufacture of the product, as provided on this card, to: *name@firmname.com*.''

(2) *Bottom front of form: Manufacturer's mailing address.* The bottom portion of the front of each form shall be pre-addressed and postage-paid with the manufacturer's name and mailing address where registration information is to be collected. If a manufacturer uses a third party to process registration forms, the third party's name may be included as a ''c/o'' (''in care of'') in the address on the form.

(d) *Back of the form*—(1) *Top back of form*—

(i) *Product information and manufacturer's identification.* The top portion of the back of each form shall state: ''Manufacturer's Contact Information'' and provide the manufacturer's name and contact information (a U.S. mailing address displayed in sentence format, website address, a telephone number, toll-free, if available), product model name and number (or other identifier as described in § 1130.4(a)(1) and (2)), and manufacture date of the product. A rectangular box shall be placed around the model name, model number, and manufacture date.

(ii) *Retention statement.* On the back of each form, just above the perforation line, the form shall state: ''KEEP THIS TOP PART FOR YOUR RECORDS. FILL OUT AND RETURN BOTTOM PART.''

(2) *Bottom back of form.*

(i) *Consumer information.* The bottom portion of the back of each form shall have blocks for the consumer to provide his/her name, address, telephone number, and e-mail address. These blocks shall be 5 mm wide and 7 mm high, with as many blocks as possible to fill the width of the card allowing for normal printing practices.

(ii) *Product information.* The following product information shall be provided on the bottom portion of the back of each form below the blocks for

consumer information printed directly on the form or on a pre-printed label that is applied to the form: the model name and number (or other identifier as described in § 1130.4(a)(1) and (2)), and the date of manufacture of the product. A rectangular box shall be placed around the model name, model number, and manufacture date. A manufacturer may include its name on the bottom portion of the back of the form if they choose to do so.

5. Remove § 1130.7.

6. Redesignate §§ 1130.8 and 1130.9 as §§ 1130.7 and 1130.8, respectively.

7. In newly redesignated § 1130.8, add new paragraph (d) to read as follows:

§ 1130.8 Recordkeeping and notification requirements.

* * * * *

(d) Records required under this section shall be made available within 24 hours, upon the request of any officer, employee, or agent acting on behalf of the Consumer Product Safety Commission.

7. Revise Figure 1 to part 1130 to read as follows:

FIGURE 1 TO PART 1130—FRONT OF REGISTRATION FORM

BILLING CODE 6355–01–P

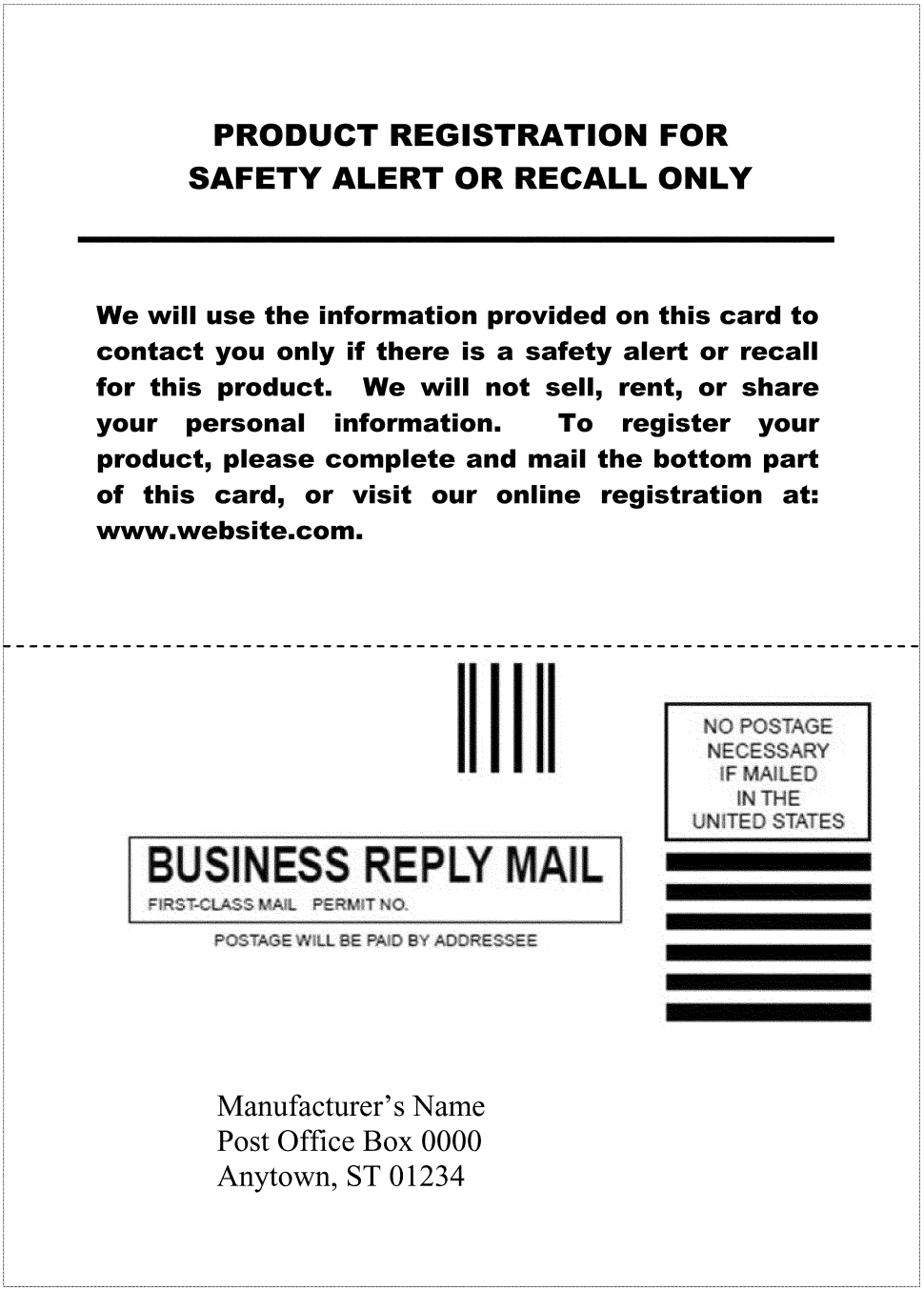

FIGURE 1 TO PART 1130—FRONT OF REGISTRATION FORM

8. Revise Figure 2 as follows:

Manufacturer's Contact Information

Manufacturer's Name • 111 Main St • Anytown, ST 01234
www.website.com
Phone Number – Toll-Free (if available)

Model Name:

Model Number:

Manufacture Date:

KEEP THIS TOP PART FOR YOUR RECORDS.
FILL OUT AND RETURN BOTTOM PART.

Name

Mailing Address

City State Zip Code

Telephone Number

- -

E-mail address

Model Name:

Model Number:

Manufacture Date:

FIGURE 2 TO PART 1130—BACK OF REGISTRATION FORM

Dated: August 2, 2011.

Todd A. Stevenson,

Secretary, U.S. Consumer Product Safety Commission.

[FR Doc. 2011–19912 Filed 8–5–11; 8:45 am]

BILLING CODE 6355–01–C

DEPARTMENT OF HEALTH AND HUMAN SERVICES

Food and Drug Administration

21 CFR Part 870

[Docket No. FDA–2011–N–0505]

Effective Date of Requirement for Premarket Approval for Cardiovascular Permanent Pacemaker Electrode

AGENCY: Food and Drug Administration, HHS.

ACTION: Proposed rule.

SUMMARY: The Food and Drug Administration (FDA) is proposing to require the filing of a premarket approval application (PMA) or a notice of completion of a product development protocol (PDP) for the following class III preamendments device: Cardiovascular permanent pacemaker electrode. The Agency is also summarizing its proposed findings regarding the degree of risk of illness or injury designed to be eliminated or reduced by requiring this device to meet the statute's approval requirements and the benefits to the public from the use of the device. In addition, FDA is announcing the opportunity for interested persons to request that the Agency change the classification of the cardiovascular permanent pacemaker electrode based on new information. This action implements certain statutory requirements.

DATES: Submit either electronic or written comments by November 7, 2011. Submit requests for a change in classification by August 23, 2011. FDA intends that, if a final rule based on this proposed rule is issued, anyone who wishes to continue to market the device will need to submit a PMA within 90 days of the effective date of the final rule. Please see section XI of this document for the proposed effective date of any final rule that may publish based on this proposal.

ADDRESSES: You may submit comments, identified by Docket No. FDA–2011–N–0505, by any of the following methods:

Electronic Submissions

Submit electronic comments in the following way:

- Federal eRulemaking Portal: *http://www.regulations.gov.* Follow the instructions for submitting comments.

Written Submissions

Submit written submissions in the following ways:

- *Fax:* 301–827–6870.
- *Mail/Hand delivery/Courier (for paper, disk, or CD–ROM submissions):* Division of Dockets Management (HFA–305), Food and Drug Administration, 5630 Fishers Lane, rm. 1061, Rockville, MD 20852.

Instructions: All submissions received must include the Agency name and Docket No. FDA–2011–N–0505 for this rulemaking. All comments received may be posted without change to *http://www.regulations.gov,* including any personal information provided. For additional information on submitting comments, see the ''Comments'' heading of the **SUPPLEMENTARY INFORMATION** section of this document.

Docket: For access to the docket to read background documents or comments received, go to *http://www.regulations.gov* and insert the docket number(s), found in brackets in the heading of this document, into the ''Search'' box and follow the prompts and/or go to the Division of Dockets Management, 5630 Fishers Lane, rm. 1061, Rockville, MD 20852.

FOR FURTHER INFORMATION CONTACT: Elias Mallis, Food and Drug Administration, Center for Devices and Radiological Health, 10903 New Hampshire Ave., Bldg. 66, Rm. 1538, Silver Spring, MD 20993–0002, 301–796–6216.

SUPPLEMENTARY INFORMATION:

I. Background—Regulatory Authorities

The Federal Food, Drug, and Cosmetic Act (the FD&C Act), as amended by the Medical Device Amendments of 1976 (the 1976 amendments) (Pub. L. 94–295), the Safe Medical Devices Act of 1990 (the SMDA) (Pub. L. 101–629), and the Food and Drug Administration Modernization Act of 1997 (FDAMA) (Pub. L. 105–115), the Medical Device User Fee and Modernization Act of 2002 (Pub. L. 107–250), the Medical Devices Technical Corrections Act (Pub. L. 108–214), and the Food and Drug Administration Amendments Act of 2007 (Pub. L. 110–85), establish a comprehensive system for the regulation of medical devices intended for human use. Section 513 of the FD&C Act (21 U.S.C. 360c) established three categories (classes) of devices, reflecting the regulatory controls needed to provide reasonable assurance of their safety and effectiveness. The three categories of devices are class I (general controls), class II (special controls), and class III (premarket approval).

Under section 513 of the FD&C Act, devices that were in commercial distribution before the enactment of the 1976 amendments, May 28, 1976 (generally referred to as preamendments devices), are classified after FDA has: (1) Received a recommendation from a device classification panel (an FDA advisory committee); (2) published the panel's recommendation for comment, along with a proposed regulation classifying the device; and (3) published a final regulation classifying the device. FDA has classified most preamendments devices under these procedures.

Devices that were not in commercial distribution prior to May 28, 1976 (generally referred to as postamendments devices), are automatically classified by section 513(f) of the FD&C Act into class III without any FDA rulemaking process. Those devices remain in class III and require premarket approval unless and until the device is reclassified into class I or II or FDA issues an order finding the device to be substantially equivalent, in accordance with section 513(i) of the FD&C Act, to a predicate device that does not require premarket approval. The Agency determines whether new devices are substantially equivalent to predicate devices by means of premarket notification procedures in section 510(k) of the FD&C Act (21 U.S.C. 360(k)) and 21 CFR part 807.

A preamendments device that has been classified into class III may be marketed by means of premarket notification procedures (510(k) process) without submission of a PMA until FDA issues a final regulation under section 515(b) of the FD&C Act (21 U.S.C. 360e(b)) requiring premarket approval. Section 515(b)(1) of the FD&C Act (21 U.S.C. 360e(b)(1)) establishes the requirement that a preamendments device that FDA has classified into class III is subject to premarket approval. A preamendments class III device may be commercially distributed without an approved PMA or a notice of completion of a PDP until 90 days after FDA issues a final rule requiring premarket approval for the device, or 30 months after final classification of the device under section 513 of the FD&C Act, whichever is later. Also, a preamendments device subject to the rulemaking procedure under section 515(b) of the FD&C Act is not required to have an approved investigational

device exemption (IDE) (see 21 CFR part 812) contemporaneous with its interstate distribution until the date identified by FDA in the final rule requiring the submission of a PMA for the device. At that time, an IDE is required only if a PMA has not been submitted or a PDP completed.

Section 515(b)(2)(A) of the FD&C Act provides that a proceeding to issue a final rule to require premarket approval shall be initiated by publication of a notice of proposed rulemaking containing: (1) The regulation; (2) proposed findings with respect to the degree of risk of illness or injury designed to be eliminated or reduced by requiring the device to have an approved PMA or a declared completed PDP and the benefit to the public from the use of the device; (3) an opportunity for the submission of comments on the proposed rule and the proposed findings; and (4) an opportunity to request a change in the classification of the device based on new information relevant to the classification of the device.

Section 515(b)(2)(B) of the FD&C Act provides that if FDA receives a request for a change in the classification of the device within 15 days of the publication of the notice, FDA shall, within 60 days of the publication of the notice, consult with the appropriate FDA advisory committee and publish a notice denying the request for change in reclassification or announcing its intent to initiate a proceeding to reclassify the device under section 513(e) of the FD&C Act. Section 515(b)(3) of the FD&C Act provides that FDA shall, after the close of the comment period on the proposed rule and consideration of any comments received, issue a final rule to require premarket approval or publish a document terminating the proceeding together with the reasons for such termination. If FDA terminates the proceeding, FDA is required to initiate reclassification of the device under section 513(e) of the FD&C Act, unless the reason for termination is that the device is a banned device under section 516 of the FD&C Act (21 U.S.C. 360f).

If a proposed rule to require premarket approval for a preamendments device is finalized, section 501(f)(2)(B) of the FD&C Act (21 U.S.C. 351(f)(2)(B)) requires that a PMA or notice of completion of a PDP for any such device be filed within 90 days of the date of issuance of the final rule or 30 months after the final classification of the device under section 513 of the FD&C Act, whichever is later. If a PMA or notice of completion of a PDP is not filed by the later of the two dates, commercial distribution of the device is required to cease since the device would be deemed adulterated under section 501(f) of the FD&C Act.

The device may, however, be distributed for investigational use if the manufacturer, importer, or other sponsor of the device complies with the IDE regulations. If a PMA or notice of completion of a PDP is not filed by the later of the two dates, and the device does not comply with IDE regulations, the device is deemed to be adulterated within the meaning of section 501(f)(1)(A) of the FD&C Act, and subject to seizure and condemnation under section 304 of the FD&C Act (21 U.S.C. 334) if its distribution continues. Shipment of devices in interstate commerce will be subject to injunction under section 302 of the FD&C Act (21 U.S.C. 332), and the individuals responsible for such shipment will be subject to prosecution under section 303 of the FD&C Act (21 U.S.C. 333). In the past, FDA has requested that manufacturers take action to prevent the further use of devices for which no PMA or PDP has been filed and may determine that such a request is appropriate for the class III device that is the subject of this regulation.

The FD&C Act does not permit an extension of the 90-day period after issuance of a final rule within which an application or a notice is required to be filed. The House Report on the 1976 amendments states that: ''[t]he thirty month grace period afforded after classification of a device into class III * * * is sufficient time for manufacturers and importers to develop the data and conduct the investigations necessary to support an application for premarket approval (H. Rept. 94–853, 94th Cong., 2d sess. 42 (1976)).''

The SMDA added section 515(i) to the FD&C Act requiring FDA to review the classification of preamendments class III devices for which no final rule requiring the submission of PMAs has been issued, and to determine whether or not each device should be reclassified into class I or class II or remain in class III. For devices remaining in class III, the SMDA directed FDA to develop a schedule for issuing regulations to require premarket approval. The SMDA does not, however, prevent FDA from proceeding immediately to rulemaking under section 515(b) of the FD&C Act on specific devices, in the interest of public health, independent of the procedures of section 515(i). Proceeding directly to rulemaking under section 515(b) of the FD&C Act is consistent with Congress' objective in enacting section 515(i), i.e., that preamendments class III devices for which PMAs have not been previously required either be reclassified to class I or class II or be subject to the requirements of premarket approval. Moreover, in this proposal, interested persons are being offered the opportunity to request reclassification of the device.

II. Dates New Requirements Apply

In accordance with section 515(b) of the FD&C Act, FDA is proposing to require that a PMA or a notice of completion of a PDP be filed with the Agency for class III devices within 90 days after issuance of any final rule based on this proposal. An applicant whose device was legally in commercial distribution before May 28, 1976, or whose device has been found to be substantially equivalent to such a device, will be permitted to continue marketing such class III devices during FDA's review of the PMA or notice of completion of the PDP. FDA intends to review any PMA for the device within 180 days, and any notice of completion of a PDP for the device within 90 days of the date of filing. FDA cautions that under section 515(d)(1)(B)(i) of the FD&C Act, the Agency may not enter into an agreement to extend the review period for a PMA beyond 180 days unless the Agency finds that ''the continued availability of the device is necessary for the public health.''

FDA intends that under § 812.2(d), the preamble to any final rule based on this proposal will state that, as of the date on which the filing of a PMA or a notice of completion of a PDP is required to be filed, the exemptions from the requirements of the IDE regulations for preamendments class III devices in § 812.2(c)(1) and (c)(2) will cease to apply to any device that is: (1) Not legally on the market on or before that date, or (2) legally on the market on or before that date but for which a PMA or notice of completion of a PDP is not filed by that date, or for which PMA approval has been denied or withdrawn.

If a PMA or notice of completion of a PDP for a class III device is not filed with FDA within 90 days after the date of issuance of any final rule requiring premarket approval for the device, commercial distribution of the device must cease. The device may be distributed for investigational use only if the requirements of the IDE regulations are met. The requirements for significant risk devices include submitting an IDE application to FDA for its review and approval. An approved IDE is required to be in effect before an investigation of the device may be initiated or continued under § 812.30. FDA, therefore, cautions that IDE applications should be submitted to FDA at least 30 days before the end of

the 90-day period after the issuance of the final rule to avoid interrupting investigations.

III. Proposed Findings With Respect to Risks and Benefits

As required by section 515(b) of the FD&C Act, FDA is publishing its proposed findings regarding: (1) The degree of risk of illness or injury designed to be eliminated or reduced by requiring that this device have an approved PMA or a declared completed PDP, and (2) the benefits to the public from the use of the device.

These findings are based on the reports and recommendations of the advisory committee (panel) for the classification of this device along with information submitted in response to the 515(i) order (74 FR 16214, April 9, 2009) and any additional information that FDA has encountered. Additional information regarding the risks as well as classification associated with this device type can be found in the following proposed and final rules and notices published in the **Federal Register** on these dates: (45 FR 7907 at 7971, February 5, 1980; 52 FR 17736, May 11, 1987; and 60 FR 41986, August 14, 1995).

IV. Device Subject to This Proposal

Cardiovascular Permanent or Temporary Pacemaker Electrode; Permanent Pacemaker Electrode (21 CFR 870.3680(b)).

A. Identification

A permanent pacemaker electrode is a device consisting of flexible insulated electrical conductors with one end connected to an implantable pacemaker pulse generator and the other end applied to the heart. The device is used to transmit a pacing electrical stimulus from the pulse generator to the heart and/or to transmit the electrical signal of the heart to the pulse generator.

B. Summary of Data

The Cardiovascular Devices Classification Panel recommended that this device be classified into class III as permanent pacemaker electrodes are permanent implants providing life-supporting or life-sustaining therapy. Over time, the devices that have been designed and developed have evolved and are widely variable from model to model as well as from manufacturer to manufacturer. These designs are generally more complex and of smaller sizes which may increase risk of failure and introduce new failure modes. Accordingly, this has limited the ability to develop comprehensive performance standards which would apply to all aspects of pacemaker lead design, testing, and use. Adequate performance standards have not yet been developed. The potential safety and effectiveness risks, unsuitability of general and special controls, long-term use as permanent implants of life-sustaining therapy, and documented field failures warrant classification of this device as class III.

C. Risks to Health

- *Material risks.* The material properties of pacemaker leads, including mechanical, electrical, biostability, biocompatibility, corrosion and other characteristics can affect acute and chronic performance.
- *Design risks.* Lead designs may introduce features or geometries that depart from traditional designs, geometries, or sizes and which may result in degradation of performance and safety of use.
- *Manufacturing risks.* Manufacturing variation, the introduction of more complex and smaller designs, or quality system failures may introduce device defects that may not be identified with bench testing or acute in vivo studies.
- *Clinical-use risks.* Thromboembolism, perforation, tissue reaction (exit block), dislodgement, infection, air embolism, muscle/nerve stimulation, stenosis, and erosion/extrusion may occur as a result of the clinical use and/or device malfunction.

V. PMA Requirements

A PMA for this device must include the information required by section 515(c)(1) of the FD&C Act. Such a PMA should also include a detailed discussion of the risks identified previously, as well as a discussion of the effectiveness of the device for which premarket approval is sought. In addition, a PMA must include all data and information on: (1) Any risks known, or that should be reasonably known, to the applicant that have not been identified in this document; (2) the effectiveness of the device that is the subject of the application; and (3) full reports of all preclinical and clinical information from investigations on the safety and effectiveness of the device for which premarket approval is sought.

A PMA must include valid scientific evidence to demonstrate reasonable assurance of the safety and effectiveness of the device for its intended use (see § 860.7(c)(2) (21 CFR 860.7(c)(2)). Valid scientific evidence is ''evidence from well-controlled investigations, partially controlled studies, studies and objective trials without matched controls, well-documented case histories conducted by qualified experts, and reports of significant human experience with a marketed device, from which it can fairly and responsibly be concluded by qualified experts that there is reasonable assurance of the safety and effectiveness of a device under its conditions of use. * * * Isolated case reports, random experience, reports lacking sufficient details to permit scientific evaluation, and unsubstantiated opinions are not regarded as valid scientific evidence to show safety or effectiveness.'' (§ 860.7(c)(2)).

VI. PDP Requirements

A PDP for this device may be submitted instead of a PMA, and must follow the procedures outlined in section 515(f) of the FD&C Act. A PDP must provide: (1) A description of the device; (2) preclinical trial information (if any); (3) clinical trial information (if any); (4) a description of the manufacturing and processing of the device; (5) the labeling of the device; and (6) all other relevant information about the device. In addition, the PDP must include progress reports and records of the trials conducted under the protocol on the safety and effectiveness of the device for which the completed PDP is sought.

VII. Opportunity To Request a Change in Classification

Before requiring the filing of a PMA or notice of completion of a PDP for a device, FDA is required by section 515(b)(2)(A)(i) through (b)(2)(A)(iv) of the FD&C Act and 21 CFR 860.132 to provide an opportunity for interested persons to request a change in the classification of the device based on new information relevant to the classification. Any proceeding to reclassify the device will be under the authority of section 513(e) of the FD&C Act.

A request for a change in the classification of this device is to be in the form of a reclassification petition containing the information required by § 860.123 (21 CFR 860.123), including new information relevant to the classification of the device.

The Agency advises that to ensure timely filing of any such petition, any request should be submitted to the Division of Dockets Management (see **ADDRESSES**) and not to the address provided in § 860.123(b)(1). If a timely request for a change in the classification of this device is submitted, the Agency will, within 60 days after receipt of the petition, and after consultation with the appropriate FDA resources, publish an order in the **Federal Register** that either denies the request or gives notice of its intent to initiate a change in the

classification of the device in accordance with section 513(e) of the FD&C Act and § 860.139 (21 CFR 860.130) of the regulations.

VIII. Environmental Impact

The Agency has determined under 21 CFR 25.30(h) that this action is of a type that does not individually or cumulatively have a significant effect on the human environment. Therefore, neither an environmental assessment nor an environmental impact statement is required.

IX. Analysis of Impacts

FDA has examined the impacts of the proposed rule under Executive Order 12866, Executive Order 13563, the Regulatory Flexibility Act (5 U.S.C. 601–612), and the Unfunded Mandates Reform Act of 1995 (Pub. L. 104–4). Executive Orders 12866 and 13563 direct Agencies to assess all costs and benefits of available regulatory alternatives and, when regulation is necessary, to select regulatory approaches that maximize net benefits (including potential economic, environmental, public health and safety, and other advantages; distributive impacts; and equity). The Agency believes that this proposed rule is not a significant regulatory action as defined by Executive Order 12866.

The Regulatory Flexibility Act requires Agencies to analyze regulatory options that would minimize any significant impact of a rule on small entities. Because none of the manufacturers of affected products are small businesses, the Agency proposes to certify that the final rule would not have a significant economic impact on a substantial number of small entities.

Section 202(a) of the Unfunded Mandates Reform Act of 1995 requires that Agencies prepare a written statement, which includes an assessment of anticipated costs and benefits, before proposing ''any rule that includes any Federal mandate that may result in the expenditure by State, local, and tribal governments, in the aggregate, or by the private sector, of $100,000,000 or more (adjusted annually for inflation) in any one year.'' The current threshold after adjustment for inflation is $136 million, using the most current (2010) Implicit Price Deflator for the Gross Domestic Product. FDA does not expect this proposed rule to result in any one-year expenditure that would meet or exceed this amount.

A. Costs of the Proposed Rule

Under the proposed rule, FDA would require producers in the cardiovascular permanent pacemaker electrode industry to obtain PMA or establish a PDP before marketing new products. Similarly, producers of cardiovascular permanent pacemaker electrodes that are already on the market would need to submit PMA applications or establish PDPs in order to continue commercial distribution of these products. Based on an analysis of registration and listing data, manufacturer Web sites, and responses to previous **Federal Register** requests for comment; FDA estimates that 5 to 10 manufacturers are marketing approximately 18 to 23 devices that would be affected by this proposed rule. We therefore estimate that the proposed rule would generate between 18 and 23 PMA or PDP submissions. FDA has estimated an upper bound on the cost of PMA at approximately $1,000,000 (see, for example, 73 FR 7501, February 8, 2008), and we assume that the cost of a PDP is roughly equal to that of a PMA; this yields a rule-induced upfront cost of between $18 and $23 million. We lack data with which to estimate how the burden of this cost would be distributed among device manufacturers, patients and insurance providers.

For a new product (*i.e.,* a cardiovascular permanent pacemaker electrode not currently on the market), the rule-induced cost would be the difference between the cost of preparing and submitting a premarket approval application and the cost of preparing and submitting a 510(k) application. However, FDA has not received any submissions for new devices of the type subject to the proposed rule since August 2004. We expect the recent pattern of zero submissions to continue; therefore, the proposed rule would not generate submission costs on an ongoing basis.

Some producers of devices that are subject to the proposed rule could be dissuaded from seeking approval by the cost of submitting a PMA application or by a low expectation that FDA would grant approval for their products. In these cases, producers would experience a rule-induced cost equal to the foregone expected profit on the withdrawn or withheld cardiovascular permanent pacemaker electrodes, which is necessarily less than the cost of PMA submission (otherwise, the producers in question would not be dissuaded from seeking PMA). Additionally, there would be a welfare loss experienced by consumers who would, in the absence of the proposed rule, use the cardiovascular permanent pacemaker electrodes that would be withdrawn or withheld from the market as a result of the call for PMA or PDP. Due to the lack of sufficient market data, we cannot quantify these consumers' welfare loss. FDA requests comment on this issue and on all methods and results of our cost estimation.

In addition to the cost to industry of preparing and submitting PMAs or PDPs, the proposed rule would impose incremental review costs on FDA. Geiger (2005) (Ref. 1) estimated that, for devices reviewed by FDA's Center for Devices and Radiological Health in 2003 and 2004, review costs averaged $563,000 per PMA. Updated for inflation (using U.S. Department of Commerce, 2011) (Ref. 2) to 2010 dollars, this average review cost becomes $653,000 per PMA. Thus, the proposed rule's review-related costs are expected to be between $11.8 million (18 × $653,000) and $15.0 million (23 × $653,000). A portion of this total would be paid by industry in the form of user fees, with the remainder coming from general revenues. FDA's Data universal numbering system database reveals that the manufacturers affected by this proposed rule have annual revenues over $100 million, so they would not be eligible for small business user fees. The standard user fee is currently set at $236,298 for a premarket application (PMA or PDP) (75 FR 45632 at 45643), so user fees would likely cover $4.3 million (= 18*$236,298) to $5.4 million (= 23*$236,298) of FDA review costs, with the remaining $7.5 to $9.6 million coming from general revenues.

B. Benefits of the Proposed Rule

The proposed requirement for premarket approval applications or product development protocols for cardiovascular permanent pacemaker electrodes would produce social benefits equal to the value of the information generated by the safety and effectiveness tests that producers would be required to conduct as part of the PMA or PDP process. Provided first to FDA, this information would eventually assist physicians, patients and insurance providers in making more informed decisions about these devices. FDA expects there to be approximately 18 to 23 PMA or PDP submissions as a result of the proposed rule, but we are unable to quantify the value of information associated with each submission. We request comment on this issue.

X. Paperwork Reduction Act of 1995

This proposed rule refers to previously approved collections of information found in FDA regulations. These collections of information are subject to review by the Office of Management and Budget (OMB) under the Paperwork Reduction Act of 1995

(44 U.S.C. 3501–3520). The collections of information in 21 CFR part 812 have been approved under OMB control number 0910–0078; the collections of information in 21 CFR part 807, subpart E have been approved under OMB control number 0910–0120; the collections of information in 21 CFR part 814, subpart B have been approved under OMB control number 0910–0231; and the collections of information under 21 CFR part 801 have been approved under OMB control number 0910–0485.

XI. Proposed Effective Date

FDA is proposing that any final rule based on this proposal become effective on the date of its publication in the **Federal Register** or at a later date if stated in the final rule.

XII. Comments

Interested persons may submit to the Division of Dockets Management (see **ADDRESSES**), either electronic or written comments regarding this document. It is only necessary to send one set of comments. It is no longer necessary to send two copies of mailed comments. Identify comments with the docket number found in brackets in the heading of this document. Received comments may be seen in the Division of Dockets Management between 9 a.m. and 4 p.m., Monday through Friday.

XIII. References

The following references have been placed on display in the Division of Dockets Management (HFA–305), Food and Drug Administration, 5630 Fishers Lane, Rm. 1061, Rockville, MD 20852, and may be seen by interested persons between 9 a.m. and 4 p.m., Monday through Friday. (FDA has verified the Web site address, but FDA is not responsible for any subsequent changes to the Web site after this document publishes in the **Federal Register**.)

1. Geiger, Dale R, ''FY 2003 and 2004 Unit Costs for the Process of Medical Device Review,'' September 2005, *http://www.fda.gov/downloads/MedicalDevices/DeviceRegulationandGuidance/Overview/MedicalDeviceUserFeeandModernizationActMDUFMA/umc109216.*
2. U.S. Department of Commerce, Bureau of Economic Analysis, National Income and Product Accounts Table 1.1.9, *http://www.bea.gov/national/nipaweb/SelectTable.asp*, accessed March 25, 2011.

List of Subjects in 21 CFR Part 870

Medical devices.

Therefore, under the Federal Food, Drug, and Cosmetic Act and under authority delegated to the Commissioner of Food and Drugs, it is proposed that 21 CFR part 870 be amended as follows:

PART 870—CARDIOVASCULAR DEVICES

1. The authority citation for 21 CFR part 870 continues to read as follows:

Authority: 21 U.S.C. 351, 360, 360c, 360e, 360j, 371.

2. Section 870.3680 is amended by revising paragraph (c) to read as follows:

§ 870.3680 Cardiovascular permanent or temporary pacemaker electrode.

* * * * *

(c) *Date PMA or notice of completion of PDP is required.* A PMA or notice of completion of a PDP is required to be filed with the Food and Drug Administration on or before [A DATE WILL BE ADDED 90 DAYS AFTER DATE OF PUBLICATION OF A FUTURE FINAL RULE IN THE **FEDERAL REGISTER**], for any permanent pacemaker electrode that was in commercial distribution before May 28, 1976, or that has, on or before [A DATE WILL BE ADDED 90 DAYS AFTER DATE OF PUBLICATION OF A FUTURE FINAL RULE IN THE **FEDERAL REGISTER**], been found to be substantially equivalent to any permanent pacemaker electrode that was in commercial distribution before May 28, 1976. Any other permanent pacemaker electrode shall have an approved PMA or declared completed PDP in effect before being placed in commercial distribution.

Dated: August 2, 2011.

Nancy K. Stade,

Deputy Director for Policy, Center for Devices and Radiological Health.

[FR Doc. 2011–19959 Filed 8–5–11; 8:45 am]

BILLING CODE 4160–01–P

DEPARTMENT OF HEALTH AND HUMAN SERVICES

Food and Drug Administration

21 CFR Part 882

[Docket No. FDA–2011–N–0504]

Effective Date of Requirement for Premarket Approval for Cranial Electrotherapy Stimulator

AGENCY: Food and Drug Administration, HHS.

ACTION: Proposed rule.

SUMMARY: The Food and Drug Administration (FDA) is proposing to require the filing of a premarket approval application (PMA) or a notice of completion of a product development protocol (PDP) for the Cranial Electrotherapy Stimulator. The Agency is also summarizing its proposed findings regarding the degree of risk of illness or injury designed to be eliminated or reduced by requiring this device to meet the statute's approval requirements and the benefits to the public from the use of the device. In addition, FDA is announcing the opportunity for interested persons to request that the Agency change the classification of the cranial electrotherapy stimulator based on new information. This action implements certain statutory requirements.

DATES: Submit either electronic or written comments by November 7, 2011. Submit requests for a change in classification by August 23, 2011. FDA intends that, if a final rule based on this proposed rule is issued, anyone who wishes to continue to market the device will need to submit a PMA within 90 days of the effective date of the final rule. Please see section XII of this document for the effective date of any final rule that may publish based on this proposal.

ADDRESSES: You may submit comments, identified by Docket No. FDA–2011–N–0504 by any of the following methods:

Electronic Submissions

Submit electronic comments in the following ways:

- Federal eRulemaking Portal: *http://www.regulations.gov.* Follow the instructions for submitting comments.

Written Submissions

Submit written submissions in the following ways:

- *Fax:* 301–827–6870.
- *Mail/Hand delivery/Courier (For paper, disk, or CD–ROM submissions):* Division of Dockets Management (HFA–305), Food and Drug Administration, 5630 Fishers Lane, Rm. 1061, Rockville, MD 20852.

Instructions: All submissions received must include the Agency name and Docket No. FDA–2011–N–0504 for this rulemaking. All comments received may be posted without change to *http://www.regulations.gov,* including any personal information provided. For additional information on submitting comments, see the ''Comments'' heading of the **SUPPLEMENTARY INFORMATION** section of this document.

Docket: For access to the docket to read background documents or comments received, go to *http://www.regulations.gov* and insert the docket number, found in brackets in the heading of this document, into the ''Search'' box and follow the prompts and/or go to the Division of Dockets Management, 5630 Fishers Lane, Rm. 1061, Rockville, MD 20852.

FOR FURTHER INFORMATION CONTACT: Timothy Marjenin, Center for Devices and Radiological Health, Food and Drug Administration, 10903 New Hampshire Ave., Bldg. 66, rm. 2258, Silver Spring, MD 20993–0002, 301–796–6502, e-mail: *timothy.marjenin@fda.hhs.gov.*

SUPPLEMENTARY INFORMATION:

I. Background—Regulatory Authorities

The Federal Food, Drug, and Cosmetic Act (the FD&C Act), as amended by the Medical Device Amendments of 1976 (the 1976 amendments) (Pub. L. 94–295), the Safe Medical Devices Act of 1990 (SMDA) (Pub. L. 101–629), and the Food and Drug Administration Modernization Act of 1997 (FDAMA) (Pub. L. 105–115), the Medical Device User Fee and Modernization Act of 2002 (MDUFMA) (Pub. L. 107–250), the Medical Devices Technical Corrections Act (Pub. L. 108–214), and the Food and Drug Administration Amendments Act of 2007 (Pub. L. 110–85), among other amendments, establish a comprehensive system for the regulation of medical devices intended for human use. Section 513 of the FD&C Act (21 U.S.C. 360c) established three categories (classes) of devices, reflecting the regulatory controls needed to provide reasonable assurance of their safety and effectiveness. The three categories of devices are class I (general controls), class II (special controls), and class III (premarket approval).

Under section 513 of the FD&C Act, devices that were in commercial distribution before the enactment of the 1976 amendments, May 28, 1976 (generally referred to as preamendments devices), are classified after FDA has: (1) Received a recommendation from a device classification panel (an FDA advisory committee); (2) published the panel's recommendation for comment, along with a proposed regulation classifying the device; and (3) published a final regulation classifying the device. FDA has classified most preamendments devices under these procedures.

Devices that were not in commercial distribution prior to May 28, 1976 (generally referred to as postamendments devices) are automatically classified by section 513(f) of the FD&C Act into class III without any FDA rulemaking process. Those devices remain in class III and require premarket approval unless, and until, the device is reclassified into class I or II or FDA issues an order finding the device to be substantially equivalent, in accordance with section 513(i) of the FD&C Act, to a predicate device that does not require premarket approval. The Agency determines whether new devices are substantially equivalent to predicate devices by means of premarket notification procedures in section 510(k) of the FD&C Act (21 U.S.C. 360(k)) and 21 CFR part 807.

A preamendments device that has been classified into class III may be marketed by means of premarket notification procedures (510(k) process) without submission of a PMA) until FDA issues a final regulation under section 515(b) of the FD&C Act (21 U.S.C. 360e(b)) requiring premarket approval. Section 515(b)(1) of the FD&C Act establishes the requirement that a preamendments device that FDA has classified into class III is subject to premarket approval. A preamendments class III device may be commercially distributed without an approved PMA or a notice of completion of a PDP until 90 days after FDA issues a final rule requiring premarket approval for the device, or 30 months after final classification of the device under section 513 of the FD&C Act, whichever is later. Also, a preamendments device subject to the rulemaking procedure under section 515(b) of the FD&C Act is not required to have an approved investigational device exemption (IDE) (see part 812 (21 CFR part 812)) contemporaneous with its interstate distribution until the date identified by FDA in the final rule requiring the submission of a PMA for the device. At that time, an IDE is required only if a PMA has not been submitted or a PDP completed.

Section 515(b)(2)(A) of the FD&C Act provides that a proceeding to issue a final rule to require premarket approval shall be initiated by publication of a notice of proposed rulemaking containing: (1) The regulation; (2) proposed findings with respect to the degree of risk of illness or injury designed to be eliminated or reduced by requiring the device to have an approved PMA or a declared completed PDP and the benefit to the public from the use of the device; (3) an opportunity for the submission of comments on the proposed rule and the proposed findings; and (4) an opportunity to request a change in the classification of the device based on new information relevant to the classification of the device.

Section 515(b)(2)(B) of the FD&C Act provides that if FDA receives a request for a change in the classification of the device within 15 days of the publication of the notice, FDA shall, within 60 days of the publication of the notice, consult with the appropriate FDA advisory committee and publish a notice denying the request for change in reclassification or announcing its intent to initiate a proceeding to reclassify the device under section 513(e) of the FD&C Act. Section 515(b)(3) of the FD&C Act provides that FDA shall, after the close of the comment period on the proposed rule and consideration of any comments received, issue a final rule to require premarket approval or publish a document terminating the proceeding together with the reasons for such termination. If FDA terminates the proceeding, FDA is required to initiate reclassification of the device under section 513(e) of the FD&C Act, unless the reason for termination is that the device is a banned device under section 516 of the FD&C Act (21 U.S.C. 360f).

When a proposed rule to require premarket approval for a preamendments device is finalized, section 501(f)(2)(B) of the FD&C Act (21 U.S.C. 351(f)(2)(B)) requires that a PMA or notice of completion of a PDP for any such device be filed within 90 days of the date of issuance of the final rule or 30 months after the final classification of the device under section 513 of the FD&C Act, whichever is later. If a PMA or notice of completion of a PDP is not filed by the later of the two dates, commercial distribution of the device is required to cease since the device would be deemed adulterated under section 501(f) of the FD&C Act.

The device may, however, be distributed for investigational use if the manufacturer, importer, or other sponsor of the device complies with the IDE regulations. If a PMA or notice of completion of a PDP is not filed by the later of the two dates, and the device does not comply with IDE regulations, the device is deemed to be adulterated within the meaning of section 501(f)(1)(A) of the FD&C Act, and subject to seizure and condemnation under section 304 of the FD&C Act (21 U.S.C. 334) if its distribution continues. Shipment of devices in interstate commerce will be subject to injunction under section 302 of the FD&C Act (21 U.S.C. 332), and the individuals responsible for such shipment will be subject to prosecution under section 303 of the FD&C Act (21 U.S.C. 333). In the past, FDA has requested that manufacturers take action to prevent the further use of devices for which no PMA or PDP has been filed and may determine that such a request is appropriate for the cranial electrotherapy stimulator.

The FD&C Act does not permit an extension of the 90-day period after issuance of a final rule within which an application or a notice is required to be filed. The House Report on the 1976 amendments states that: ''[t]he thirty month grace period afforded after

classification of a device into class III * * * is sufficient time for manufacturers and importers to develop the data and conduct the investigations necessary to support an application for premarket approval (H. Rept. 94–853, 94th Cong., 2d sess. 42 (1976)).''

The SMDA added section 515(i) to the FD&C Act requiring FDA to review the classification of preamendments class III devices for which no final rule requiring the submission of PMAs has been issued, and to determine whether or not each device should be reclassified into class I or class II or remain in class III. For devices remaining in class III, the SMDA directed FDA to develop a schedule for issuing regulations to require premarket approval. The SMDA does not, however, prevent FDA from proceeding immediately to rulemaking under section 515(b) of the FD&C Act on specific devices, in the interest of public health, independent of the procedures of section 515(i). Proceeding directly to rulemaking under section 515(b) of the FD&C Act is consistent with Congress' objective in enacting section 515(i), i.e., that preamendments class III devices for which PMAs have not been previously required either be reclassified to class I or class II or be subject to the requirements of premarket approval. Moreover, in this proposal, interested persons are being offered the opportunity to request reclassification of the cranial electrotherapy stimulator.

II. Dates New Requirements Apply

In accordance with section 515(b) of the FD&C Act, FDA is proposing to require that a PMA or a notice of completion of a PDP be filed with the Agency for the cranial electrotherapy stimulator within 90 days after issuance of any final rule based on this proposal. An applicant whose device was legally in commercial distribution before May 28, 1976, or whose device has been found to be substantially equivalent to such a device, will be permitted to continue marketing such class III devices during FDA's review of the PMA or notice of completion of the PDP. FDA intends to review any PMA for the device within 180 days, and any notice of completion of a PDP for the device within 90 days of the date of filing. FDA cautions that under section 515(d)(1)(B)(i) of the FD&C Act, the Agency may not enter into an agreement to extend the review period for a PMA beyond 180 days unless the Agency finds that ''the continued availability of the device is necessary for the public health.''

FDA intends that under § 812.2(d), the preamble to any final rule based on this proposal will state that, as of the date on which the filing of a PMA or a notice of completion of a PDP is required to be filed, the exemptions from the requirements of the IDE regulations for preamendments class III devices in § 812.2(c)(1) and (c)(2) will cease to apply to any device that is: (1) Not legally on the market on or before that date or (2) legally on the market on or before that date but for which a PMA or notice of completion of a PDP is not filed by that date, or for which PMA approval has been denied or withdrawn.

If a PMA or notice of completion of a PDP for the cranial electrotherapy stimulator is not filed with FDA within 90 days after the date of issuance of any final rule requiring premarket approval for the device, commercial distribution of the device must cease. The device may be distributed for investigational use only if the requirements of the IDE regulations are met. The requirements for significant risk devices include submitting an IDE application to FDA for its review and approval. An approved IDE is required to be in effect before an investigation of the device may be initiated or continued under § 812.30. FDA, therefore, cautions that IDE applications should be submitted to FDA at least 30 days before the end of the 90-day period after the issuance of the final rule to avoid interrupting investigations.

III. Proposed Findings With Respect to Risks and Benefits

As required by section 515(b) of the FD&C Act, FDA is publishing its proposed findings regarding: (1) The degree of risk of illness or injury designed to be eliminated or reduced by requiring that the cranial electrotherapy stimulator have an approved PMA or a declared completed PDP and (2) the benefits to the public from the use of the cranial electrotherapy stimulator.

These findings are based on the reports and recommendations of the advisory committee (panel) for the classification of this device along with information submitted in response to the 515(i) Order, (74 FR 16214, April 9, 2009), and any additional information that FDA has encountered. Additional information regarding the risks as well as classification associated with this device type can be found in the following documents published in the **Federal Register** on these dates: November 28, 1974 (43 FR 55716), September 4, 1979 (44 FR 51770), January 6, 1989 (54 FR 550), August 31, 1993 (58 FR 45865), August 24, 1995 (60 FR 43967), November 22, 1996 (61 FR 59448), January 28, 1997 (62 FR 4023), and June 4, 1997 (62 FR 30456 and 62 FR 30600).

IV. Devices Subject to This Proposal

Cranial electrotherapy stimulator (21 CFR 882.5800)

A. Identification

A cranial electrotheraphy stimulator is a device that applies electrical current to a patient's head to treat insomnia, depression, or anxiety.

B. Summary of Data

The Neurological Devices Panel that discussed original classification for the cranial electrotherapy stimulator (CES) device in 1977 and 1978 ultimately recommended that the device be classified into class III because satisfactory device effectiveness had not been demonstrated. The panel considered information from the National Research Council, which reviewed 88 published studies on CES and concluded that the device has not been shown to be effective in treating any of the conditions for which it was prescribed. In addition, the panel indicated that it was not possible to establish an adequate performance standard for CES because the characteristics of the electrical current necessary for potential effectiveness were not known. The panel believed that general controls would not provide sufficient control over these characteristics, and that the device presented a potential unreasonable risk of illness or injury to the patient if the practitioner relied on the device, and it was ineffective in treating the patient's illness. Therefore, the panel recommended that premarket approval was necessary to assure the safety and effectiveness of CES devices.

In support of a subsequent proposed rule in 1993 for classification of CES into class III, FDA performed a literature review and identified additional studies that had been performed for CES. After a review of the scientific literature, FDA concluded that the effectiveness of CES had still not been established by adequate scientific evidence.

FDA has performed a literature search for studies of CES published after the 1993 proposed rule (January 1, 1993, to present). Many studies were excluded from further review because they were conducted on very specific populations (*e.g.,* alcoholics or other types of substance abuse), and therefore were not representative of the general population suffering from insomnia, anxiety, or depression. Six studies were identified for further review (Refs. 1 through 6). FDA also identified two relevant meta-analyses (Refs. 7 and 8).

The Bystritsky et al. study (Ref. 1) was conducted open-label, and on only 12

subjects. The study involved observational baseline versus post-treatment without a control and therefore provided insufficient evidence of safety and effectiveness. The Heffernan study (Ref. 2) concludes that a single CES treatment may have physiologic effects; however, no outcomes of anxiety, depression or insomnia were measured and the study was conducted on only 20 subjects. The Overcash study (Ref. 3) was a retrospective study design and used an anxiety rating scale that was not validated. The Voris study (Ref. 4) analyzed only a subgroup of ''psychiatric subjects'' which included many types of anxiety disorders as well as non-anxiety psychiatric disorders. The subgroup represents a diagnostically heterogeneous group. The subgroup analysis was not pre-specified and the number of subjects per subgroup was not specified. The Hyun study (Ref. 5) was a randomized controlled trial of 60 subjects. However, the indication under investigation was preoperative anxiety, which may not be indicative of an Axis I anxiety disorder. Moreover, the outcome measure, a 5-point Likert scale rating of anxiety, was not a standardized validated rating instrument. The Winick study (Ref. 6), which was a randomized controlled trial of 33 subjects with anxiety prior to dental procedures and utilized a 7-point Likert scale, suffers from the same limitations as the Hyun study.

The O'Conner meta-analysis (Ref. 7) examined the effect of CES on reduction of primary and secondary withdrawal symptoms among various chemically dependent populations. The results of this analysis do not relate to the question of safety and effectiveness since the labeled indications for CES currently include insomnia, depression, or anxiety, and not withdrawal symptoms of chemical dependence. The Klawansky meta-analysis (Ref. 8) was based on an examination of literature on CES versus sham treatment. Although the analysis showed CES to be more effective than sham for anxiety, the study populations showed great heterogeneity of diagnostic categories (*e.g.,* in many cases anxiety was not the primary diagnosis, but rather one of a number of symptomatic outcome measures collected during a trial). Therefore, it is unclear whether the finding can be generalized to support the effectiveness of CES in homogeneous populations of individuals suffering from anxiety, depression, or insomnia. Also, many of the studies evaluated in the Klawansky meta-analysis involved insufficient blinding.

FDA has concluded from a review of the scientific literature and the information provided in the 515(i) call for information (74 FR 16214) that the effectiveness of CES has not been established by adequate scientific evidence and the Agency continues to agree with the panel's recommendation.

C. Risks to Health

- *Worsening of the condition being treated*—If the device is not effective and the patient is not treated in a conventional manner, the patient's psychological condition may worsen.
- *Skin irritation*—The electrodes or the conductive cream used with the electrodes may cause skin irritation.
- *Headaches*—Reported cases of adverse effects of CES devices include headaches following treatment with electrical stimulation.
- *Potential risk of seizure*—electrical stimulation of the brain may result in seizures, particularly in patients with a history of seizure.
- *Blurred vision*—placement of electrodes over the eyes may cause blurred vision.
- *Potential adverse effects from electrical stimulation of the brain*—The physiological effects associated with electrical stimulation of the brain by these devices have not been studied systematically; therefore, adverse effects which may be caused by these electrical stimuli remain unknown.

V. PMA Requirements

A PMA for the cranial electrotherapy simulator must include the information required by section 515(c)(1) of the FD&C Act. Such a PMA should also include a detailed discussion of the risks identified previously, as well as a discussion of the effectiveness of the device for which premarket approval is sought. In addition, a PMA must include all data and information on: (1) Any risks known, or that should be reasonably known, to the applicant that have not been identified in this document; (2) the effectiveness of the device that is the subject of the application; and (3) full reports of all preclinical and clinical information from investigations on the safety and effectiveness of the device for which premarket approval is sought.

A PMA must include valid scientific evidence to demonstrate reasonable assurance of the safety and effectiveness of the device for its intended use (see § 860.7(c)(2)). Valid scientific evidence is ''evidence from well-controlled investigations, partially controlled studies, studies and objective trials without matched controls, well-documented case histories conducted by qualified experts, and reports of significant human experience with a marketed device, from which it can fairly and responsibly be concluded by qualified experts that there is reasonable assurance of the safety and effectiveness of a device under its conditions of use. * * * Isolated case reports, random experience, reports lacking sufficient details to permit scientific evaluation, and unsubstantiated opinions are not regarded as valid scientific evidence to show safety or effectiveness. * * *'' (21 CFR 860.7(c)(2)).

VI. PDP Requirements

A PDP for the cranial electrotherapy stimulator may be submitted in lieu of a PMA, and must follow the procedures outlined in section 515(f) of the FD&C Act. A PDP must provide: (1) A description of the device, (2) preclinical trial information (if any), (3) clinical trial information (if any), (4) a description of the manufacturing and processing of the device, (5) the labeling of the device, and (6) all other relevant information about the device. In addition, the PDP must include progress reports and records of the trials conducted under the protocol on the safety and effectiveness of the device.

VII. Opportunity To Request a Change in Classification

Before requiring the filing of a PMA or notice of completion of a PDP for a device, FDA is required by section 515(b)(2)(A)(i) through (b)(2)(A)(iv) of the FD&C Act and § 860.132 to provide an opportunity for interested persons to request a change in the classification of the device based on new information relevant to the classification. Any proceeding to reclassify the device will be under the authority of section 513(e) of the FD&C Act.

A request for a change in the classification of these devices is to be in the form of a reclassification petition containing the information required by § 860.123, including new information relevant to the classification of the device.

The Agency advises that to ensure timely filing of any such petition, any request should be submitted to the Division of Dockets Management (see **ADDRESSES**) and not to the address provided in § 860.123(b)(1). If a timely request for a change in the classification of these devices is submitted, the Agency will, within 60 days after receipt of the petition, and after consultation with the appropriate FDA resources, publish an order in the **Federal Register** that either denies the

request or gives notice of its intent to initiate a change in the classification of the device in accordance with section 513(e) of the FD&C Act and 21 CFR 860.130 of the regulations.

VIII. Environmental Impact

The Agency has determined under 21 CFR 25.30(h) that this action is of a type that does not individually or cumulatively have a significant effect on the human environment. Therefore, neither an environmental assessment nor an environmental impact statement is required.

IX. Analysis of Impacts

FDA has examined the impacts of the proposed rule under Executive Order 12866, Executive Order 13563, the Regulatory Flexibility Act (5 U.S.C. 601–612) and the Unfunded Mandates Reform Act of 1995 (Pub. L. 104–4). Executive Orders 12866 and 13563 direct Agencies to assess all costs and benefits of available regulatory alternatives and, when regulation is necessary, to select regulatory approaches that maximize net benefits (including potential economic, environmental, public health and safety, and other advantages; distributive impacts; and equity). The Agency believes that this proposed rule is not a significant action under Executive Order 12866.

The Regulatory Flexibility Act requires Agencies to analyze regulatory options that would minimize any significant impact of a rule on small entities. The Agency proposes to certify that the rule would not have a significant economic impact on a substantial number of small entities.

Section 202(a) of the Unfunded Mandates Reform Act of 1995 requires that Agencies prepare a written statement, which includes an assessment of anticipated costs and benefits, before proposing ''any rule that includes any Federal mandate that may result in the expenditure by State, local, and tribal governments, in the aggregate, or by the private sector, of $100,000,000 or more (adjusted annually for inflation) in any one year.'' The current threshold after adjustment for inflation is $136 million, using the most current (2010) Implicit Price Deflator for the Gross Domestic Product. FDA does not expect this proposed rule to result in any one-year expenditure that would meet or exceed this amount.

A. Benefits of the Proposed Rule

The proposed requirement for PMAs or PDPs for CES would generate social benefits equal to the value of the information generated by the safety and effectiveness tests that CES producers would be required to conduct under the proposed call for PMAs or PDPs. Provided first to FDA, this information would eventually assist physicians, patients and insurance providers in making more informed decisions about CES.

There is reason to believe that current decisions about CES use are based on incomplete information. In their 1995 meta-analysis of CES research, Klawansky et al. (Ref. 8) find that most CES studies in the literature are beset with weaknesses, such as small sample size, incomplete statistical reporting, and potential bias from authors who have commercial interests in CES products. Klawansky and coauthors also express concern that only three of the 18 studies they examined were truly double-blinded, and patient blinding may have been insufficient in some cases due to the difficulty of mimicking in sham treatment the sensation produced by CES. More recent literature indicates that there is still much uncertainty about the safety and effectiveness of CES.

If consumers, up until now, have been overestimating the safety and effectiveness of CES devices, then demand for these products would decrease as a result of the call for PMAs or PDPs, and consumers would purchase fewer CES devices and services than under the previous process whereby CES devices were cleared under the 510(k) process. For all the units purchased under the 510(k) clearance process that would not be purchased under the PMA or PDP approval process, society is currently incurring a cost equal to the difference between the producer's cost of producing that unit and the dollar value of the health benefit experienced by the consumer. The avoidance of this cost represents the per-unit benefit to society of the proposed requirement for PMAs or PDPs; summing over all currently-marketed units yields society's total benefit. This sum is bounded above by current consumer expenditure on CES devices (further discussion of this point appears in the Technical Appendix in section IX.D of this document).

Consumer expenditure on CES can be approximated by finding total producer revenue (this is only an approximation because any applicable taxes drive a wedge between expenditure and revenue). FDA estimates that there are approximately 11 producers currently marketing CES devices. Six of these producers appear in FDA's Data universal numbering system database, with sales revenue for the six ranging from $100,000 to $1.2 million per year. Manta.com (Ref. 9) reports sales revenue of less than $0.5 million for one of the producers not appearing in Data universal numbering system. (It appears that few CES producers market non-CES goods or services, so most of the firms' revenue can be attributed to CES sales.) The average annual sales revenue of the 7 producers for whom we have data is $515,000. Assuming that this average equals the CES industry's overall average yields an estimate of annual CES producer revenue of 11 × $515,000=$5.67 million. As mentioned previously, in the case where additional safety and effectiveness information decreases demand, this revenue total provides an upper bound on the estimated benefit to society of requiring PMAs or PDPs for CES devices.

If the additional testing associated with class III PMA or PDP were to reveal that CES devices are safer and more effective than consumers currently believe, then demand for these products would increase. In this case, consumers currently purchase too few rather than too many CES devices as a result of incomplete information, and the benefit of the requirement for PMAs or PDPs would come from the increased use and associated health benefits of the devices. As discussed in the Technical Appendix in section IX.D of this document, FDA cannot in this case estimate a bound on the total social benefit of requiring PMAs or PDPs. FDA requests comment on this issue and on all methods and results of our benefits estimation.

B. Costs of the Proposed Rule

Under the proposed rule, FDA would require producers in this industry to obtain PMA or establish a PDP before marketing new products. Currently, a CES producer receives clearance to market by submitting a 510(k). Therefore, the rule-induced cost per new product would be the difference between the cost of preparing and submitting a PMA application (which we assume to be approximately the same with PDP as with traditional PMA) and the cost of preparing and submitting a 510(k) application. Blozan and Tucker (Ref. 10) estimate the cost of an average 510(k) at $500; since the mean number of pages for the 510(k) submissions in their sample is 24, the estimated cost per page is $21, or $36 after adjusting for inflation (Ref. 11). FDA records indicate that, recently, the one or two cranial electrotherapy stimulator 510(k) submissions received per year have consisted of several hundred pages each. Assuming an average of 300 pages per submission and a cost per page of $36 yields an average cost of preparing and submitting a 510(k) of $11,000. FDA

has estimated an upper bound on the cost of PMA at approximately $1,000,000 (see, for example, 73 FR 7498 at 7501, February 8, 2008); this yields a difference of $989,000 between the costs of PMA and 510(k) preparation. Multiplying this cost difference by the recent average of 1.5 new CES submissions per year yields an annual rule-induced cost equal to $1.48 million. Additionally, producers of CES products that are already on the market would need to submit PMA applications, costing approximately $1 million each. FDA believes that there are approximately 13 such products, so there would be a rule-induced upfront cost of $13 million.

These cost estimates are only correct if no producers would be dissuaded from introducing new products or seeking approval for currently-marketed products by the cost of submitting a PMA application or by changes in the possibility that FDA grants approval. In cases where producers are dissuaded from entering or attempting to stay in the market, the cost to industry of the proposed rule would be the foregone expected profit on the withdrawn or withheld CES devices, which is necessarily less than the cost of PMA submission (otherwise, the producers in question would not be dissuaded from seeking PMA); the $13 million upfront and $1.48 million annual estimates mentioned previously thus provide upper bounds on the submission-related cost that would be borne by industry. Excluded from these totals is the welfare loss that would be borne by consumers who would, in the absence of the proposed rule, use the CES devices that would be withdrawn or withheld from the market as a result of the call for PMAs or PDPs. Due to the lack of sufficient market data, we cannot quantify these consumers' welfare loss. FDA requests comment on this issue and on all methods and results of our cost estimation.

In addition to the cost to industry of preparing and submitting PMAs or PDPs, the proposed rule would impose review costs on FDA. Geiger (Ref. 12) estimated that, for devices reviewed by FDA's Center for Devices and Radiological Health in 2003 and 2004, review costs were $563,000 per PMA and $13,400 per 510(k). Updated for inflation (with Ref. 11) to 2010 dollars, these review costs become $653,000 per PMA and $15,500 per 510(k). Thus, the proposed rule's review-related costs are expected to equal $8.49 million (= 13 × $653,000) upfront and $956,000 (= 1.5 × [$653,000 − $15,500]) per subsequent year. A portion of this total will be paid by industry in the form of user fees, with the remainder coming from general revenues. The CES manufacturers currently registered with FDA have annual revenues well under $100 million, so they would likely be eligible for small business user fees, which are currently set at $59,705 for a premarket application (PMA or PDP) and $2,174 for a 510(k) submission (75 FR 45641 at 45643). Thus, user fees would likely cover $776,000 (= 13 × $59,705) of upfront and $86,000 (= 1.5 × [$59,705 − $2,174]) of subsequent annual rule-induced review costs. Because annual revenues for CES manufacturers are also below $30 million, CES manufacturers submitting first premarket applications may qualify for user fee waivers; such cases would increase the portion of FDA review costs coming from general revenues above the current estimates of $7.71 million upfront and $870,000 per subsequent year and decrease the anticipated rule-induced change in user fee collections.

Table 1 of this document displays all quantified benefits and costs of the proposed rule. We reiterate that most of our estimates represent extreme upper bounds. For both benefits and costs, the likely effects of the rule would be much smaller than the estimates appearing in table 1.

TABLE 1—ESTIMATED UPPER BOUNDS OF BENEFITS AND COSTS

[$ thousands]

	3% Discount rate		7% Discount rate	
	Annual	Present value	Annual	Present value
Ongoing Benefit:				
Better-Informed Consumer Decisions	5,665	48,324	5,665	39,789
Benefits: Ten-Year Total		48,324		39,789
Upfront Costs:				
Industry PMA or PDP Preparation	13,000	13,000	13,000	13,000
User Fees	776	776	776	776
FDA Review, Net of User Fees	7,710	7,710	7,710	7,710
Ongoing Costs:				
Industry PMA or PDP Preparation	1,484	12,656	1,484	10,421
User Fees	86	736	86	606
FDA Review, Net of User Fees	870	4,945	870	4,072
Costs: Ten-Year Total [1]		39,823		36,584

[1] Costs borne by consumers (in the form of welfare loss) are not estimated.

C. Impact on Small Entities

The Regulatory Flexibility Act requires Agencies to prepare an initial regulatory flexibility analysis if a proposed rule would have a significant effect on a substantial number of small businesses, non-profit organizations, local jurisdictions or other entities. Even though the producers of CES devices do tend to be small, only a very few entities participate in this market. FDA estimates that there are approximately 11 producers currently marketing CES devices; there may also be a handful of affiliated businesses that would be affected by the requirement for PMAs or PDPs. Therefore, FDA tentatively concludes that this proposed rule would not have a significant economic impact on a substantial number of small entities. We request comment on this issue.

D. Technical Appendix

The supply-demand diagrams of figure 1 of this document illustrate the changes in the market for CES devices and services that would occur if the additional testing associated with class III pre-market approval were to reveal that CES devices are less safe and effective than consumers currently believe. In Panel A, the benefit of proposed requirement for PMAs or PDPs is represented by the shaded area below

the current market supply curve, above the better-informed, post-call for PMA demand curve (*Demand$_1$*) and between the old and new quantities purchased (determined by the intersections of the pre- and post-call for PMAs or PDPs demand curves with the current supply curve or the vertical axis). A similar shaded benefit area appears in Panel B, but in that case, there is an offsetting loss (shown as the shaded triangle between the pre- and post-call for PMAs or PDPs supply curves) caused by CES producers passing on some costs related to PMAs and PDPs to consumers and consumers therefore purchasing even fewer CES devices or services than new information indicates they should. The overall benefit of the rule in Panel B is the difference between the areas of the Benefit and Loss triangles. In both panels of Figure 1, total CES spending by consumers, equal to the revenue collected by CES producers and shown as the rectangle *LMNO,* provides an upper bound on the amount of the shaded rule-induced social benefit. While total spending/revenue always provides an overestimate of the social benefit, the amount of the over-estimation may range from moderate, as in Panel A (the case in which CES products disappear from the market), to extreme, as in Panel B (the case in which there is continued use of at least some CES products).

Figure 1. The Benefit of Information in the Market for CES Devices and Services

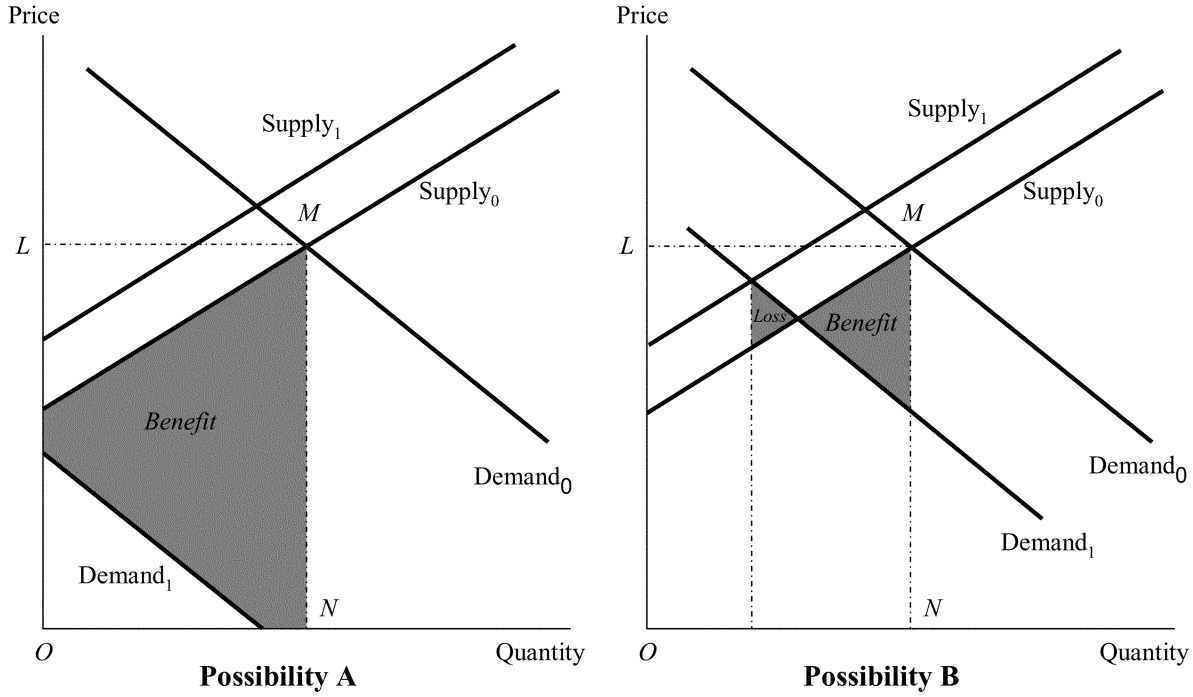

If the additional testing associated with class III marketing approval increases consumers' confidence in the safety and effectiveness of CES devices, then demand for these products would increase, as depicted in figure 2 of this document. In this case, consumers currently purchase too few rather than too many CES devices and services as a result of incomplete information. The benefit to society of providing information can, as in Panel A of figure 1, be depicted graphically as the area between the pre-call for PMA or PDP supply curve and the post-call for PMA or PDP demand curve, and between the old and new quantities consumed (determined by the intersections of the pre- and post-call for PMA or PDP demand curves with the pre- and post-call for PMA or PDP supply curves), but because the revenue rectangle *LMNO* does not contain the shaded benefit area, FDA cannot in this case estimate a bound on the total social benefit.

Figure 2. The Benefit of Information in the Market for CES Devices and Services

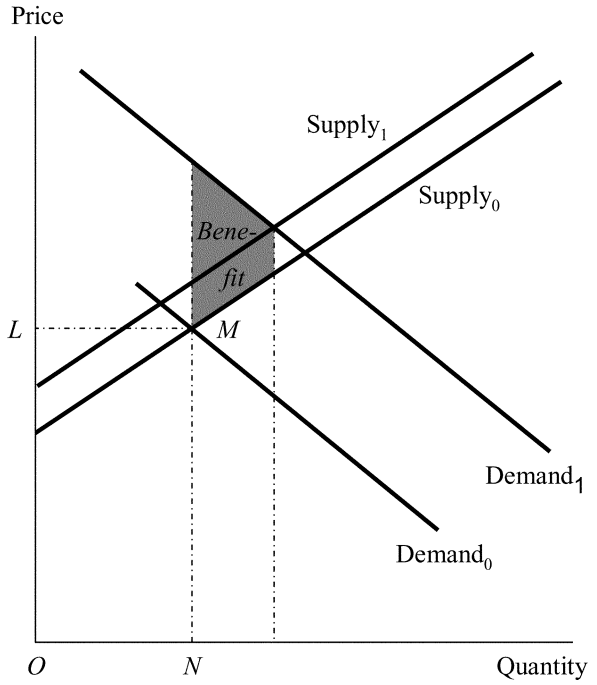

X. Federalism

FDA has analyzed this proposed rule in accordance with the principles set forth in Executive Order 13132. FDA has determined that the proposed rule, if finalized, would not contain policies that would have substantial direct effects on the States, on the relationship between the National Government and the States, or on the distribution of power and responsibilities among the various levels of government. Accordingly, the Agency tentatively concludes that the proposed rule does not contain policies that have federalism implications as defined in the Executive order and, consequently, a federalism summary impact statement is not required.

XI. Paperwork Reduction Act of 1995

This proposed rule refers to currently approved collections of information found in FDA regulations. These collections of information are subject to review by the Office of Management and Budget (OMB) under the Paperwork Reduction Act of 1995 (44 U.S.C. 3501–3520). The collections of information in 21 CFR part 812 have been approved under OMB control number 0910–0078; the collections of information in 21 CFR part 814, subpart B, have been approved under OMB control number 0910–0231; and the collections of information under 21 CFR part 801 have been approved under OMB control number 0910–0485.

XII. Proposed Effective Date

FDA is proposing that any final rule based on this proposal become effective on the date of its publication in the **Federal Register** or at a later date if stated in the final rule.

XIII. Comments

Interested persons may submit to the Division of Dockets Management (see **ADDRESSES**), either electronic or written comments regarding this document. It is only necessary to send one set of comments. It is no longer necessary to send two copies of mailed comments. Identify comments with the docket number found in brackets in the heading of this document. Received comments may be seen in the Division of Dockets Management between 9 a.m. and 4 p.m., Monday through Friday.

XIV. References

The following references have been placed on display in the Division of Dockets Management (see **ADDRESSES**), and may be seen by interested persons between 9 a.m. and 4 p.m., Monday through Friday. (FDA has verified the Web site addresses, but we are not responsible for any subsequent changes to the Web sites after this document publishes in the **Federal Register.**)

1. Bystritsky A, L. Kerwin, J. Feusner, ''A Pilot Study of Cranial Electrotherapy Stimulation for Generalized Anxiety Disorder,'' *Journal of Clinical Psychiatry,* 69(3): 412–417, 2008.
2. Heffernan, Michael, ''The Effect of a Single Cranial Electrotherapy Stimulation on Multiple Stress Measures,'' The Townsend Letter for Doctors and Patients, 147: 60–64, 1995.
3. Overcash, Stephen J., ''Cranial Electrotherapy Stimulation in Patients Suffering From Acute Anxiety Disorders,'' *American Journal of Electromedicine,* 16(1): 49–51, 1999.
4. Voris, Marshall D, ''An Investigation of the Effectiveness of Cranial Electrotherapy Stimulation in the Treatment of Anxiety Disorders Among Outpatient Psychiatric Patients, Impulse Control Parolees and Pedophiles,'' Manuscript submitted for publication. Delos Mind/Body Institute, Dallas and Corpus Christi, TX: 1–19, 1995.
5. Hyun J.K., Y.K. Woon, S.L. Yoon, *et al.,* ''The Effect of Cranial Electrotherapy Stimulation on Preoperative Anxiety and Hemodynamic Responses.'' *Korean Journal of Anesthesiology,* 55: 657–61, 2008.
6. Winick, R.L., ''Cranial Electrotherapy Stimulation (CES): A Safe and Effective Low Cost Means of Anxiety Control in a Dental Practice,'' *General Dentistry,* 47(1): 50–55, 1999.
7. O'Connor M.E., F. Bianco, R. Nicholson, ''Meta-analysis of Cranial Electrostimulation (CES) in Relation to the Primary and Secondary Symptoms of Substance Withdrawal,'' Presented at the 12th annual meeting of the Bioelectromagnetics Society, June 14, 1991.
8. Klawansky S., A. Yeung, C. Berkey, *et al.,* ''Meta-analysis of Randomized Controlled Trials of Cranial Electrostimulation,'' The Journal of Nervous and Mental Disease, 183(7): 478–485, 1995.

9. Manta: Vital Info on Small Businesses, *http://www.manta.com,* accessed June 11, 2010.
10. Blozan, Carl F. and Steven A. Tucker, ''Premarket Notifications: The First 24,000,'' Medical Device & Diagnostic Industry: 59–69, January 1986.
11. U.S. Department of Commerce, Bureau of Economic Analysis, 2010, National Income and Product Accounts Table 1.1.9., *http://www.bea.gov/national/nipaweb/SelectTable.asp*, accessed March 25, 2011.
12. Geiger, Dale R. FY 2003 and 2004 Unit Costs for the Process of Medical Device Review, *http://www.fda.gov/downloads/MedicalDevices/DeviceRegulationandGuidance/Overview/MedicalDeviceUserFeeandModernizationActMDUFMA/ucm109216.pdf,* accessed September 2005.

List of Subjects in 21 CFR Part 882

Medical devices, Neurological devices.

Therefore, under the Federal Food, Drug, and Cosmetic Act and under authority delegated to the Commissioner of Food and Drugs, it is proposed that 21 CFR part 882 be amended as follows:

PART 882—NEUROLOGICAL DEVICES

1. The authority citation for 21 CFR part 882 continues to read as follows:

Authority: 21 U.S.C. 351, 360, 360c, 360e, 360j, 371.

2. Section 882.5800 is amended by revising paragraph (c) to read as follows:

§ 882.5800 Cranial electrotherapy stimulator.

* * * * *

(c) *Date PMA or notice of completion of PDP is required.* A PMA or notice of completion of a PDP is required to be filed with the Food and Drug Administration on or before [A DATE WILL BE ADDED 90 DAYS AFTER DATE OF PUBLICATION OF A FUTURE FINAL RULE IN THE **FEDERAL REGISTER**], for any cranial electrotherapy stimulator device that was in commercial distribution before May 28, 1976, or that has, on or before [A DATE WILL BE ADDED 90 DAYS AFTER DATE OF PUBLICATION OF A FUTURE FINAL RULE IN THE **FEDERAL REGISTER**], been found to be substantially equivalent to any cranial electrotherapy stimulator device that was in commercial distribution before May 28, 1976. Any other cranial electrotherapy stimulator device shall have an approved PMA or declared completed PDP in effect before being placed in commercial distribution.

Dated: August 2, 2011.

Nancy K. Stade,

Deputy Director for Policy, Center for Devices and Radiological Health.

[FR Doc. 2011–19957 Filed 8–5–11; 8:45 am]

BILLING CODE 4160–01–P

DEPARTMENT OF HOMELAND SECURITY

Coast Guard

33 CFR Part 165

[Docket No. USCG–2011–0254]

RIN 1625–AA11

Regulated Navigation Area, Zidell Waterfront Property, Willamette River, OR

AGENCY: Coast Guard, DHS.

ACTION: Notice of proposed rulemaking.

SUMMARY: The Coast Guard proposes the establishment of a Regulated Navigation Area (RNA) at the Zidell Waterfront Property located on the Willamette River in Portland, Oregon. This RNA is necessary to preserve the integrity of an engineered sediment cap as part of an Oregon Department of Environmental Quality (DEQ) required remedial action. This proposed RNA will do so by prohibiting activities that could disturb or damage the engineered sediment cap.

DATES: Comments and related material must be received by the Coast Guard on or before November 7, 2011.

ADDRESSES: You may submit comments identified by docket number USCG–2011–0254 using any one of the following methods:

(1) *Federal eRulemaking Portal: http://www.regulations.gov.*

(2) *Fax:* 202–493–2251.

(3) *Mail:* Docket Management Facility (M–30), U.S. Department of Transportation, West Building Ground Floor, Room W12–140, 1200 New Jersey Avenue, SE., Washington, DC 20590–0001.

(4) *Hand delivery:* Same as mail address above, between 9 a.m. and 5 p.m., Monday through Friday, except Federal holidays. The telephone number is 202–366–9329.

To avoid duplication, please use only one of these four methods. See the ''Public Participation and Request for Comments'' portion of the **SUPPLEMENTARY INFORMATION** section below for instructions on submitting comments.

FOR FURTHER INFORMATION CONTACT: If you have questions on this proposed rule, call or e-mail MST1 Jaime Sayers, Waterways Management Division, Marine Safety Unit Portland, Coast Guard; telephone 503–240–9319, e-mail *Jaime.a.Sayers@uscg.mil.* If you have questions on viewing or submitting material to the docket, call Renee V. Wright, Program Manager, Docket Operations, telephone 202–366–9826.

SUPPLEMENTARY INFORMATION:

Public Participation and Request for Comments

We encourage you to participate in this rulemaking by submitting comments and related materials. All comments received will be posted without change to *http://www.regulations.gov* and will include any personal information you have provided.

Submitting Comments

If you submit a comment, please include the docket number for this rulemaking (USCG–2011–0254), indicate the specific section of this document to which each comment applies, and provide a reason for each suggestion or recommendation. You may submit your comments and material online (via *http://www.regulations.gov*) or by fax, mail, or hand delivery, but please use only one of these means. If you submit a comment online via *http://www.regulations.gov*, it will be considered received by the Coast Guard when you successfully transmit the comment. If you fax, hand deliver, or mail your comment, it will be considered as having been received by the Coast Guard when it is received at the Docket Management Facility. We recommend that you include your name and a mailing address, an e-mail address, or a telephone number in the body of your document so that we can contact you if we have questions regarding your submission.

To submit your comment online, go to *http://www.regulations.gov*, click on the ''submit a comment'' box, which will then become highlighted in blue. In the ''Document Type'' drop down menu select ''Proposed Rule'' and insert ''USCG–2011–0254'' in the ''Keyword'' box. Click ''Search'' then click on the balloon shape in the ''Actions'' column. If you submit your comments by mail or hand delivery, submit them in an unbound format, no larger than 8½; by 11 inches, suitable for copying and electronic filing. If you submit comments by mail and would like to know that they reached the Facility, please enclose a stamped, self-addressed postcard or envelope. We will consider all comments and material received during the comment period and may

change the rule based on your comments.

Viewing Comments and Documents

To view comments, as well as documents mentioned in this preamble as being available in the docket, go to *http://www.regulations.gov*, click on the ''read comments'' box, which will then become highlighted in blue. In the ''Keyword'' box insert ''USCG–2011–0254'' and click ''Search.'' Click the ''Open Docket Folder'' in the ''Actions'' column. You may also visit the Docket Management Facility in Room W12–140 on the ground floor of the Department of Transportation West Building, 1200 New Jersey Avenue, SE., Washington, DC 20590, between 9 a.m. and 5 p.m., Monday through Friday, except Federal holidays. We have an agreement with the Department of Transportation to use the Docket Management Facility.

Privacy Act

Anyone can search the electronic form of comments received into any of our dockets by the name of the individual submitting the comment (or signing the comment, if submitted on behalf of an association, business, labor union, etc.). You may review a Privacy Act notice regarding our public dockets in the January 17, 2008, issue of the **Federal Register** (73 FR 3316).

Public Meeting

We do not now plan to hold a public meeting. But you may submit a request for one on or before September 7, 2011 using one of the four methods specified under **ADDRESSES**. Please explain why you believe a public meeting would be beneficial. If we determine that one would aid this rulemaking, we will hold one at a time and place announced by a later notice in the **Federal Register**.

Basis and Purpose

The Zidell Waterfront Property is placing an engineered sediment cap over contaminated sediments adjacent to the west bank of the Willamette River between approximate river miles 13.5 and 14.2 as part of an Oregon Department of Environmental Quality (DEQ) required remedial action. Geographically this location starts at approximately the West bank of the Marquam Bridge and continues southerly, along the west bank of the Willamette River to the North end of Ross Island.

The engineered sediment cap is designed to be compatible with normal port operations, but could be damaged by other maritime activities including anchoring, dragging, dredging, grounding of large vessels, deployment of barge spuds, etc. Such damage could disrupt the function or impact the effectiveness of the cap to contain the underlying contaminated sediment and shoreline soil in these areas. As such, this RNA is necessary to help ensure the cap is protected and will do so by prohibiting certain maritime activities that could disturb or damage it.

The engineered sediment cap will also reduce the depth of the water close to the west bank of the Willamette River and, as a result, may limit some vessels from using that area of the river.

Discussion of Proposed Rule

The proposed rule would create an RNA covering all waters adjacent to the Zidell Waterfront Property on the Willamette River extending from the west bank of the river out 200 to 400 feet into the river depending on the exact location between approximate river mile 14.2 near the Ross Island Bridge and approximate river mile 13.5 near the Marquam Bridge.

Regulatory Analyses

We developed this proposed rule after considering numerous statutes and executive orders related to rulemaking. Below we summarize our analyses based on 13 of these statutes or executive orders.

Regulatory Planning and Review

This proposed rule is not a significant regulatory action under section 3(f) of Executive Order 12866, Regulatory Planning and Review, and does not require an assessment of potential costs and benefits under section 6(a)(3) of that Order. The Office of Management and Budget has not reviewed it under that Order. The Coast Guard has made this determination based on the fact that the RNA is limited in size and will not limit vessels from transiting or using the waters covered, except for activities that may damage the engineered sediment cap.

Small Entities

Under the Regulatory Flexibility Act (5 U.S.C. 601–612), we have considered whether this proposed rule would have a significant economic impact on a substantial number of small entities. The term ''small entities'' comprises small businesses, not-for-profit organizations that are independently owned and operated and are not dominant in their fields, and governmental jurisdictions with populations of less than 50,000.

The Coast Guard certifies under 5 U.S.C. 605(b) that this proposed rule would not have a significant economic impact on a substantial number of small entities. This proposed rule would affect the following entities, some of which might be small entities: The owners or operators of vessels operating in the area covered by the RNA. The RNA would not have a significant economic impact on a substantial number of small entities, however, because the RNA is limited in size and will not limit vessels from transiting or using the waters covered, except for activities that may damage the engineered sediment cap.

If you think that your business, organization, or governmental jurisdiction qualifies as a small entity and that this rule would have a significant economic impact on it, please submit a comment (see **ADDRESSES**) explaining why you think it qualifies and how and to what degree this rule would economically affect it.

Assistance for Small Entities

Under section 213(a) of the Small Business Regulatory Enforcement Fairness Act of 1996 (Pub. L. 104–121), we want to assist small entities in understanding this proposed rule so that they can better evaluate its effects on them and participate in the rulemaking. If the rule would affect your small business, organization, or governmental jurisdiction and you have questions concerning its provisions or options for compliance, please contact MST1 Jaime Sayers, Waterways Management Division, Marine Safety Unit Portland, Coast Guard; telephone 503–240–9319, e-mail *Jaime.A.Sayers@uscg.mil.* The Coast Guard will not retaliate against small entities that question or complain about this proposed rule or any policy or action of the Coast Guard.

Collection of Information

This proposed rule would call for no new collection of information under the Paperwork Reduction Act of 1995 (44 U.S.C. 3501–3520.).

Federalism

A rule has implications for federalism under Executive Order 13132, Federalism, if it has a substantial direct effect on State or local governments and would either preempt State law or impose a substantial direct cost of compliance on them. We have analyzed this proposed rule under that Order and have determined that it does not have implications for federalism.

Unfunded Mandates Reform Act

The Unfunded Mandates Reform Act of 1995 (2 U.S.C. 1531–1538) requires Federal agencies to assess the effects of their discretionary regulatory actions. In particular, the Act addresses actions that may result in the expenditure by a

State, local, or tribal government, in the aggregate, or by the private sector of $100,000,000 (adjusted for inflation) or more in any one year. Though this proposed rule would not result in such an expenditure, we do discuss the effects of this rule elsewhere in this preamble.

Taking of Private Property

This proposed rule would not cause a taking of private property or otherwise have taking implications under Executive Order 12630, Governmental Actions and Interference with Constitutionally Protected Property Rights.

Civil Justice Reform

This proposed rule meets applicable standards in sections 3(a) and 3(b)(2) of Executive Order 12988, Civil Justice Reform, to minimize litigation, eliminate ambiguity, and reduce burden.

Protection of Children

We have analyzed this proposed rule under Executive Order 13045, Protection of Children from Environmental Health Risks and Safety Risks. This rule is not an economically significant rule and would not create an environmental risk to health or risk to safety that might disproportionately affect children.

Indian Tribal Governments

This proposed rule does not have tribal implications under Executive Order 13175, Consultation and Coordination with Indian Tribal Governments, because it would not have a substantial direct effect on one or more Indian tribes, on the relationship between the Federal Government and Indian tribes, or on the distribution of power and responsibilities between the Federal Government and Indian tribes.

Energy Effects

We have analyzed this proposed rule under Executive Order 13211, Actions Concerning Regulations That Significantly Affect Energy Supply, Distribution, or Use. We have determined that it is not a ''significant energy action'' under that order because it is not a ''significant regulatory action'' under Executive Order 12866 and is not likely to have a significant adverse effect on the supply, distribution, or use of energy. The Administrator of the Office of Information and Regulatory Affairs has not designated it as a significant energy action. Therefore, it does not require a Statement of Energy Effects under Executive Order 13211.

Technical Standards

The National Technology Transfer and Advancement Act (NTTAA) (15 U.S.C. 272 note) directs agencies to use voluntary consensus standards in their regulatory activities unless the agency provides Congress, through the Office of Management and Budget, with an explanation of why using these standards would be inconsistent with applicable law or otherwise impractical. Voluntary consensus standards are technical standards (*e.g.,* specifications of materials, performance, design, or operation; test methods; sampling procedures; and related management systems practices) that are developed or adopted by voluntary consensus standards bodies.

This proposed rule does not use technical standards. Therefore, we did not consider the use of voluntary consensus standards.

Environment

We have analyzed this proposed rule under Department of Homeland Security Management Directive 023–01 and Commandant Instruction M16475.lD, which guide the Coast Guard in complying with the National Environmental Policy Act of 1969 (NEPA) (42 U.S.C. 4321–4370f), and have made a preliminary determination that this action is one of a category of actions that do not individually or cumulatively have a significant effect on the human environment. A preliminary environmental analysis checklist supporting this determination is available in the docket where indicated under **ADDRESSES**. This proposed rule involves the creation of a regulated navigation area. We seek any comments or information that may lead to the discovery of a significant environmental impact from this proposed rule.

List of Subjects in 33 CFR Part 165

Harbors, Marine safety, Navigation (water), Reporting and recordkeeping requirements, Security measures, Waterways.

For the reasons discussed in the preamble, the Coast Guard proposes to amend 33 CFR part 165 as follows:

PART 165—REGULATED NAVIGATION AREAS AND LIMITED ACCESS AREAS

1. The authority citation for part 165 continues to read as follows:

Authority: 33 U.S.C. 1226, 1231; 46 U.S.C. Chapter 701, 3306, 3703; 50 U.S.C. 191, 195; 33 CFR 1.05–1(g), 6.04–1, 6.04–6, 160.5; Pub. L. 107–295, 116 Stat. 2064; Department of Homeland Security Delegation No. 0170.1.

2. Add § 165.1337 to read as follows:

§ 165.1337 Regulated Navigation Area, Zidell Waterfront Property, Willamette River, OR.

(a) *Regulated Navigation Area.* The following area is a regulated navigation area: All waters within the area bounded by the following points: 45°29′55.12″ N/122°40′2.19″ W; thence continuing to 45°29′55.14″ N/122°39′59.36″ W; thence continuing to 45°29′56.30″ N/122°39′59.09″ W; thence continuing to 45°29′57.51″ N/122°39′59.64″ W; thence continuing to 45°29′58.72″ N/122°39′59.64″ W; thence continuing to 45°30′0.52″ N/122°39′59.94″ W; thence continuing to 45°30′1.95″ N/122°40′0.46″ W; thence continuing to 45°30′3.44″ N/122°40′0.78″ W; thence continuing to 45°30′4.87″ N/122°40′0.95″ W; thence continuing to 45°30′7.33″ N/122°40′1.80″ W; thence continuing to 45°30′8.11″ N/122°40′2.69″ W; thence continuing to 45°30′8.83″ N/122°40′3.81″ W; thence continuing to 45°30′13.06″ N/122°40′5.39″ W; thence continuing to 45°30′15.30″ N/122°40′6.93″ W; thence continuing to 45°30′17.78″ N/122°40′8.16″ W; thence continuing to 45°30′20.53″ N/122°40′9.07″ W; thence continuing to 45°30′20.90″ N/122° 40′11.52″ W; thence continuing to 45°30′24.04″ N/122°40′12.53″ W; thence continuing to 45°30′23.79″ N/122°40′14.87″ W; thence continuing along the shoreline to 45°29′55.12″ N/122°40′2.19″ W.

Geographically the regulated navigation area covers all waters adjacent to the Zidell Waterfront Property on the Willamette River extending from the west bank of the river out 200 to 400 feet into the river depending on the exact location between approximate river mile 14.2 near the Ross Island Bridge and approximate river mile 13.5 near the Marquam Bridge.

(b) *Regulations.* All vessels are prohibited from anchoring, dragging, dredging, or trawling in the regulated navigation area established by this section. See 33 CFR part 165 subpart B for additional information and requirements.

Dated: July 6, 2011.

G.T. Blore,

Rear Admiral, U.S. Coast Guard, Commander, Thirteenth Coast Guard District.

[FR Doc. 2011–19986 Filed 8–5–11; 8:45 am]

BILLING CODE 9110–04–P

ENVIRONMENTAL PROTECTION AGENCY

40 CFR Part 50

[EPA–HQ–OAR–2007–1145; FRL–9449–1]

RIN 2060–AO72

Public Hearing for Secondary National Ambient Air Quality Standards for Oxides of Nitrogen and Sulfur

AGENCY: Environmental Protection Agency (EPA).

ACTION: Announcement of public hearing.

SUMMARY: The EPA is announcing a public hearing to be held for the proposed rule titled ''Secondary National Ambient Air Quality Standards for Oxides of Nitrogen and Sulfur'' which was published in the **Federal Register** on August 1, 2011. The hearing will be held in Arlington, Virginia on Thursday, August 25, 2011.

DATES: The public hearing will be held on August 25, 2011. Please refer to **SUPPLEMENTARY INFORMATION** for additional information on the public hearing.

ADDRESSES: *Hearing.* The hearing will be held at the following location: Potomac Yard Conferencing Center, First Floor Conference Room South, Room S–1204–06), Office of Pesticides Programs, 1 Potomac Yard, 2777 S. Crystal Drive, Arlington, Virginia 22202, phone: 703–347–8930.

Note: All persons entering the Potomac Yard Conferencing Center must have a valid picture ID such as a driver's license and go through federal security procedures. All persons must go through a magnetometer and all personal items must go through x-ray equipment, similar to airport security procedures. After passing through the equipment, all persons must sign in at the guard station and show their picture ID.

Comments. Written comments on this proposed rule may also be submitted to the EPA electronically, by mail, by facsimile, or through hand delivery/courier. Please refer to the notice of proposed rulemaking published in the **Federal Register** on August 1, 2011, (76 FR 46084) for the addresses and detailed instructions for submitting written comments.

A complete set of documents related to the proposal is available for public inspection at the EPA Docket Center, located at 1301 Constitution Avenue, NW., Room 3334, Washington, DC between 8:30 a.m. and 4:30 p.m., Monday through Friday, excluding legal holidays. A reasonable fee may be charged for copying. Documents are also available through the electronic docket system at *http://www.regulations.gov*.

The EPA Web site for the rulemaking, which includes the proposal and information about the public hearing, can be found at: *http://www.epa.gov/ttn/naaqs/standards/no2so2sec/cr_fr.html.*

FOR FURTHER INFORMATION CONTACT: If you would like to speak at the public hearing or have questions concerning the public hearing, please contact Mrs. Sherry Russell at the address given below under **SUPPLEMENTARY INFORMATION.**

Questions concerning the ''Secondary National Ambient Air Quality Standards for Oxides of Nitrogen and Sulfur'' proposed rule should be addressed to Rich Scheffe, U.S. EPA, Office of Air Quality Planning and Standards, Air Quality Assessment Division, (C304–02), Research Triangle Park, NC 27711, telephone: (919) 541–4650, e-mail: *scheffe.rich@epa.gov.*

SUPPLEMENTARY INFORMATION: The proposal for which the EPA is holding a public hearing was published in the **Federal Register** on August 1, 2011, (76 FR 46084) and is available on the following Web site: *http://www.epa.gov/ttn/naaqs/standards/no2so2sec/cr_fr.html.*

The public hearing will provide interested parties the opportunity to present data, views, or arguments concerning the proposed rule. The EPA may ask clarifying questions during the oral presentations, but will not respond to the presentations at that time. Written statements and supporting information submitted during the comment period will be considered with the same weight as any oral comments and supporting information presented at the public hearing. Written comments must be postmarked by the last day of the comment period, as specified in the proposal.

The public hearing will be held in Arlington, Virginia on August 25, 2011. The public hearing will begin at 10 a.m. and continue until 7 p.m. or later, if necessary, depending on the number of speakers wishing to participate. The EPA will make every effort to accommodate all speakers that arrive and register before 7 p.m. The EPA is scheduling a lunch break from 1 until 2:30 p.m. If you would like to present oral testimony at the hearing, please notify Mrs. Sherry Russell, (C504–02) U.S. Environmental Protection Agency, Research Triangle Park, North Carolina 27711, e-mail (preferred method for registering): *russell.sherry@epa.gov;* telephone: (919) 541–0306 no later than 5 p.m. on August 23, 2011. She will arrange a general time slot for you to speak. The EPA will make every effort to follow the schedule as closely as possible on the day of the hearing.

Oral testimony will be limited to five (5) minutes for each commenter to address the proposal. We will not be providing equipment for commenters to show overhead slides or make computerized slide presentations unless we receive special requests in advance. Commenters should notify Mrs. Russell if they will need specific audiovisual (AV) equipment. Commenters should also notify Mrs. Russell if they need specific translation services for non-English speaking commenters. The EPA encourages commenters to provide written versions of their oral testimonies either electronically on computer disk or CD–ROM or in paper copy.

The hearing schedule, including lists of speakers, will be posted on EPA's Web site for the proposal at *http://www.epa.gov/ttn/naaqs/standards/no2so2sec/cr_fr.html* prior to the hearing. A verbatim transcript of the hearing and written statements will be included in the rulemaking docket.

How can I get copies of this document and other related information?

The EPA has established the official public docket for the ''Secondary National Ambient Air Quality Standards for Oxides of Nitrogen and Sulfur'' under Docket Number EPA–HQ–OAR–2007–1145. The EPA has also developed a Web site for the proposal at the address given above. Please refer to the proposal, published in the **Federal Register** on August 1, 2011, (76 FR 46084) for detailed information on accessing information related to the proposal.

Dated: August 2, 2011.

Mary Henigin,

Acting Director, Office of Air Quality Planning and Standards.

[FR Doc. 2011–20029 Filed 8–5–11; 8:45 am]

BILLING CODE 6560–50–P

ENVIRONMENTAL PROTECTION AGENCY

40 CFR Parts 260 and 261

[EPA–HQ–RCRA–2010–0695; FRL–9448–9]

RIN 2050–AG60

Hazardous Waste Management System: Identification and Listing of Hazardous Waste: Carbon Dioxide (CO_2) Streams in Geologic Sequestration Activities

AGENCY: Environmental Protection Agency.

ACTION: Proposed rule.

SUMMARY: The Environmental Protection Agency (EPA or the Agency) is proposing to revise the regulations for hazardous waste management under the Resource Conservation and Recovery Act (RCRA) to conditionally exclude carbon dioxide (CO_2) streams that are hazardous from the definition of hazardous waste, provided these hazardous CO_2 streams are captured from emission sources, are injected into Class VI Underground Injection Control (UIC) wells for purposes of geologic sequestration (GS), and meet certain other conditions. EPA is taking this action because the Agency believes that the management of these CO_2 streams under the proposed conditions does not present a substantial risk to human health or the environment, and therefore additional regulation pursuant to RCRA's hazardous waste regulations is unnecessary. EPA expects that this amendment will substantially reduce the uncertainty associated with identifying these CO_2 streams under RCRA subtitle C, and will also facilitate the deployment of GS by providing additional regulatory certainty.

DATES: Comments must be received on or before October 7, 2011. Under the Paperwork Reduction Act, comments on the information collection provisions must be received by the Office of Management and Budget (OMB) on or before September 7, 2011.

ADDRESSES: Submit your comments, identified by Docket ID No. EPA–HQ–RCRA–2010–0695, by one of the following methods:

- *http://www.regulations.gov:* Follow the on-line instructions for submitting comments.
- *E-mail: rcra-docket@epa.gov.*
- *Fax:* 202–566–9744
- *Mail:* RCRA Docket, Environmental Protection Agency, Mailcode: 28221T, 1200 Pennsylvania Ave., NW., Washington, DC 20460. Please include a total of two copies. In addition, please mail a copy of your comments on the information collection provisions to the Office of Information and Regulatory Affairs, Office of Management and Budget, Attn: Desk Officer for EPA, 725 17th St., NW., Washington, DC 20503.
- *Hand Delivery:* Deliver two copies of your comments to EPA West Building, Room 3334, 1301 Constitution Avenue, NW., Washington, DC 20460. Such deliveries are only accepted during the Docket's normal hours of operation, and special arrangements should be made for deliveries of boxed information.

Instructions: Direct your comments to Docket ID No. EPA–HQ–RCRA–2010–0695. EPA's policy is that all comments received will be included in the public docket without change and may be made available online at *http://www.regulations.gov,* including any personal information provided, unless the comment includes information claimed to be Confidential Business Information (CBI) or other information whose disclosure is restricted by statute. Do not submit information that you consider to be CBI or otherwise protected through *http://www.regulations.gov* or e-mail. The *http://www.regulations.gov* Web site is an ''anonymous access'' system, which means EPA will not know your identity or contact information unless you provide it in the body of your comment. If you send an e-mail comment directly to EPA without going through *http://www.regulations.gov,* your e-mail address will be automatically captured and included as part of the comment that is placed in the public docket and made available on the Internet. If you submit an electronic comment, EPA recommends that you include your name and other contact information in the body of your comment and with any disk or CD–ROM you submit. If EPA cannot read your comment due to technical difficulties and cannot contact you for clarification, EPA may not be able to consider your comment. Electronic files should avoid the use of special characters, any form of encryption, and be free of any defects or viruses. For additional information about EPA's public docket, visit the EPA Docket Center homepage at *http://www.epa.gov/epahome/dockets.htm.* For additional instructions on submitting comments, go to the **SUPPLEMENTARY INFORMATION** section of this document.

Docket: All documents in the docket are listed in the *http://www.regulations.gov* index. Although listed in the index, some information is not publicly available, *e.g.,* CBI or other information whose disclosure is restricted by statute. Certain other material, such as copyrighted material, will be publicly available only in hard copy. Publicly available docket materials are available either electronically in *http://www.regulations.gov* or in hard copy at the RCRA Docket, EPA/DC, EPA West, Room 3334, 1301 Constitution Ave., NW., Washington, DC. The Public Reading Room is open from 8:30 a.m. to 4:30 p.m., Monday through Friday, excluding legal holidays. The telephone number for the Public Reading Room is (202) 566–1744, and the telephone number for the RCRA Docket is (202) 566–0270.

FOR FURTHER INFORMATION CONTACT: Ross Elliott, Office of Resource Conservation and Recovery (5304P), Environmental Protection Agency, 1200 Pennsylvania Avenue, NW., Washington, DC 20460; telephone number: 703–308–8748; fax number: 703–308–0514; e-mail address *elliott.ross@epa.gov*.

SUPPLEMENTARY INFORMATION:

A. Does this action apply to me?

This is a proposed regulation. If finalized, this rule may apply to generators, transporters, and owners or operators of treatment, storage, and disposal facilities engaged in the management of carbon dioxide streams that would otherwise be regulated as hazardous wastes under the RCRA subtitle C hazardous waste regulations as part of geologic sequestration activities. This includes entities in the following industries: Operators of carbon dioxide injection wells used for geologic sequestration; and certain industries identified by their North American Industry Classification System (NAICS) code: oil and gas extraction facilities (NAICS 211111); utilities (NAICS 22); transportation (NAICS 48–49); and manufacturing (NAICS 31–33). More detailed information on the potentially affected entities is presented in Section VI of this preamble. If you have questions regarding the applicability of this action to a particular entity, consult the person listed in the preceding **FOR FURTHER INFORMATION CONTACT** section.

B. What should I consider as I prepare my comments for EPA?

1. Submitting CBI. Do not submit this information to EPA through *http://www.regulations.gov* or e-mail. Clearly mark the part or all of the information that you claim to be CBI. For CBI information on a disk or CD–ROM that you mail to EPA, mark the outside of the disk or CD–ROM as CBI and then identify electronically within the disk or CD–ROM the specific information that is claimed as CBI. In addition to one complete version of the comment that includes information claimed as CBI, a copy of the comment that does not contain the information claimed as CBI must be submitted for inclusion in the public docket. Information so marked will not be disclosed except in accordance with the procedures set forth in 40 CFR part 2.

2. Tips for Preparing Your Comments. When submitting comments, remember to:

- Identify the rulemaking by docket number and other identifying information (subject heading, **Federal Register** date and page number).

• Follow directions—The agency may ask you to respond to specific questions or organize comments by referencing a Code of Federal Regulations (CFR) part or section number.

• Explain why you agree or disagree, suggest alternatives, and substitute language for your requested changes.

• Describe any assumptions and provide any technical information and/or data that you used.

• If you estimate potential costs or burdens, explain how you arrived at your estimate in sufficient detail to allow for it to be reproduced.

• Provide specific examples to illustrate your concerns, and suggest alternatives.

• Explain your views as clearly as possible.

• Make sure to submit your comments by the comment period deadline identified.

3. Docket Copying Costs. The Docket Center no longer has hard copies of original OSWER documents. The documents were converted to PDF format. Oversized documents were retained and may be copied. Patrons are allowed 93 free copied-pages. Thereafter, they are charged 15 cents per page. When necessary, an invoice stating how many copies were made, the cost of the order, and where to send a check will be issued to the patron. There is also an administrative fee of $14.00 added to the cost of the order.

Documents also are available on microfilm. The EPA/DC staff can help patrons locate needed documents and operate the microfilm machines. There is no fee for printing documents from microfilm or microfiche.

Patrons who are outside of the metropolitan Washington, DC, area can request documents by telephone, however, patrons are asked to submit requests by e-mail to ensure accuracy. The photocopying fee is the same as for walk-in patrons. There is no charge for converting microfilm/microfiche to PDF format and sending it to a customer. If an invoice is necessary, EPA/DC staff can mail one with the order.

Preamble Outline

I. Statutory Authority
II. Abbreviations, Acronyms, and Definitions
  A. Abbreviations and Acronyms
  B. Definitions Used in This Preamble
III. Background
  A. What is Geologic Sequestration?
  B. Why is Geologic Sequestration being considered as a climate change mitigation technology?
  C. What other recent EPA rulemakings are related to CCS?
  D. RCRA Applicability to GS Activities
  E. CO_2 Stream Characterization
IV. Detailed Discussion of This Proposed Rule
  A. Authority for Conditional Exclusion From RCRA Subtitle C Requirements
  B. CO_2 Streams Managed Prior to Underground Injection
  1. CO_2 Streams Generated at Capture Sites
  2. Transportation of CO_2 Streams to UIC Class VI Injection Well
  C. Underground Injection of CO_2 Streams at UIC Class VI Wells
  1. Development of UIC Class VI Wells Under SDWA
  2. Key Elements of the UIC Class VI Well Requirements
  3. RCRA Land Disposal Restrictions
  4. Subtitle C Corrective Action
  5. Conclusion
  D. Prohibition on Introduction of Other RCRA Hazardous Wastes
  E. Loss of the Conditional Exclusion
  F. Adaptive Approach
  G. Definition of Carbon Dioxide Stream
V. State Authorization
  A. Applicability of the Rule in Authorized States
  B. Effect on State Authorization
VI. What are the costs and benefits of the proposed rule?
VII. Statutory and Executive Order (EO) Reviews
  A. Executive Order 12866: Regulatory Planning and Review and Executive Order 13563: Improving Regulation and Regulatory Review
  B. Paperwork Reduction Act
  C. Regulatory Flexibility Act
  D. Unfunded Mandates Reform Act
  E. Executive Order 13132: Federalism
  F. Executive Order 13175: Consultation and Coordination With Indian Tribal Governments
  G. Executive Order 13045: Protection of Children From Environmental Health and Safety Risks
  H. Executive Order 13211: Actions That Significantly Affect Energy Supply, Distribution, or Usage
  I. National Technology Transfer and Advancement Act
  J. Executive Order 12898: Federal Actions To Address Environmental Justice in Minority Populations and Low-Income Populations

I. Statutory Authority

These regulations are proposed under the authority of sections 2002, 3001–3009 and 3013 of the Solid Waste Disposal Act (SWDA) of 1970, as amended by the Resource Conservation and Recovery Act (RCRA) of 1976, and the Hazardous and Solid Waste Amendments of 1984 (HSWA), 42 U.S.C. 6912, 6921–6929, 6934.

II. Abbreviations, Acronyms, and Definitions

A. Abbreviations and Acronyms

AoR Area of Review.
CAA Clean Air Act.
CCS Carbon Capture and Storage.
CERCLA Comprehensive Environmental Response, Compensation, and Liability Act.
CO_2 Carbon Dioxide.
EOR Enhanced Oil and Natural Gas Recovery.
EPA Environmental Protection Agency.
GHG Greenhouse Gas.
GS Geologic Sequestration.
HSWA Hazardous and Solid Waste Amendments.
RCRA Resource Conservation and Recovery Act.
SDWA Safe Drinking Water Act.
TC Toxicity Characteristic.
TCLP Toxicity Characteristic Leaching Procedure.
UIC Underground Injection Control.
USDW Underground Source of Drinking Water.

B. Definitions Used in This Preamble

Authorized representative: The person responsible for the overall operation of a facility or an operational unit (*i.e.,* part of a facility), *e.g.,* the plant manager, superintendent or person of equivalent responsibility.

Carbon dioxide (CO_2) stream: Carbon dioxide that has been captured from an emission source (*e.g.,* power plant), plus incidental associated substances derived from the source materials and the capture process, and any substances added to the stream to enable or improve the injection process.

Enhanced Oil or Gas Recovery (EOR/EGR): Typically, the process of injecting a fluid (*e.g.,* water, brine, or CO_2) into an oil or gas bearing formation to recover residual oil or natural gas. The injected fluid thins (decreases the viscosity) or displaces small amounts of extractable oil and gas, which is then available for recovery. This is also known as secondary or tertiary recovery.

Supercritical CO_2: Carbon dioxide that is above its critical temperature (31.1 °C, or 88 °F) and pressure (73.8 bar, or 1070 psi). Supercritical substances have physical properties intermediate to those of gases and liquids.

III. Background

A. What is Geologic Sequestration?

Geologic Sequestration (GS) is the process of injecting carbon dioxide (CO_2) captured from an emission source (*e.g.,* a power plant or industrial facility) into deep subsurface rock formations in order to isolate the CO_2. GS is a key component of a set of climate change mitigation technologies referred to as ''carbon capture and storage'' or CCS. CCS can be described as a three-step process, beginning with the capture and compression of the CO_2 stream from fossil-fuel power plants or other industrial sources, after which the CO_2 stream is transported (usually in pipelines) to an on-site or off-site location, where it is then injected

underground for purposes of sequestration.[1]

To transport the captured CO_2 stream for GS, the CO_2 stream will typically be compressed into a supercritical fluid.[2] CO_2 exists as a supercritical fluid at approximately 1,070 pounds per square inch (psi) and 88 °Fahrenheit (F), and in this state it exhibits physical properties intermediate to those of a liquid and a gas. As mentioned, the majority of CO_2 is expected to be delivered to the sequestration site by dedicated pipeline;[3] however, transport by truck, rail, barge or supertanker may also occur, but these have been described as ''logistically impractical'' for large-scale CCS operations.[4] Whether by pipeline, or these other means, the transportation of supercritical CO_2 is regulated by the U.S. Department of Transportation (DOT) under regulations found in 49 CFR parts 171–180 (governing the transportation by air, rail, highway, and water) and parts 190 and 195–199 (governing the transportation of hazardous liquids and carbon dioxide by pipeline). The CO_2 stream is then injected into deep subsurface rock formations via one or more wells, using technologies that have been developed and refined by the oil and gas and chemical manufacturing industries over the past several decades. To sequester the CO_2 stream, EPA believes that many GS site owners or operators will inject the CO_2 stream to depths of greater than 800 meters (or 2,625 feet), for the purpose of maximizing capacity and storage, and where ambient pressure and temperature are sufficient to maintain the CO_2 stream in a supercritical state. December 10, 2010 (75 FR at 77233).

When injected in an appropriate receiving formation, the CO_2 stream is sequestered by a combination of trapping mechanisms, including physical and geochemical processes, as summarized below.

○ *Physical trapping* occurs when the relatively buoyant CO_2 rises in the formation until it reaches a stratigraphic zone with low fluid permeability (*i.e.,* geologic confining system) that inhibits further upward migration. Physical trapping can also occur as residual CO_2 is immobilized in formation pore spaces. A portion of the CO_2 will dissolve into the groundwater and hydrocarbons present in the receiving formation, and CO_2 molecules can also attach onto the surfaces of coal and certain organic-rich shales (a process called preferential sorption), displacing other molecules, such as methane. The effectiveness of physical CO_2 trapping is demonstrated by natural analogs worldwide in a range of geologic settings, where CO_2 has remained trapped for millions of years. For example, CO_2 has been trapped for more than 65 million years under the Pisgah Anticline, northeast of the Jackson Dome in Mississippi and Louisiana, with no evidence of leakage from the confining formation.[5]

○ *Geochemical trapping* occurs when chemical reactions between the dissolved CO_2 and minerals in the receiving formation result in the precipitation of solid carbonate minerals.[6] The timeframe over which CO_2 will be trapped by these mechanisms depends on the properties of the receiving formation and the injected CO_2 stream. Research is currently ongoing to further understand these mechanisms and the time required to trap CO_2 under various conditions.

Additional background information on the GS of CO_2 streams can also be found in the final rule and associated record for the final rule for UIC Class VI wells published on December 10, 2010 (75 FR 77230).

B. Why is Geologic Sequestration being considered as a climate change mitigation technology?

Climate change is happening now, and the effects can be seen on every continent and in every ocean. While certain effects of climate change can be beneficial, particularly in the short term, current and future effects of climate change pose considerable risks to human health and the environment.[7] There is now clear evidence that the Earth's climate is warming:[8]

○ Global surface temperatures have risen by 1.3 °F when estimated by a linear trend from 1906 to 2005.[9]

○ Worldwide, the last decade has been the warmest on record.[10]

○ Ocean temperatures and sea levels are rising and glaciers are retreating around the world.[11]

Most of this recent warming is very likely the result of human activities.[12] Many human activities (such as the combustion of fossil fuels) release greenhouse gases (GHGs) into the atmosphere. The levels of several of these gases, including CO_2, have reached concentrations not seen on Earth in hundreds of thousands of years.[13]

In addition, fossil fuels are expected to remain the main source of energy production well into the 21st century, and increased concentrations of CO_2 are expected unless energy producers reduce CO_2 emissions to the atmosphere. For example, CCS could enable the continued use of coal in a manner that greatly reduces the associated CO_2 emissions, while other alternative energy sources are developed in the coming decades. CCS has the potential to be key to achieving domestic GHG emissions reductions, and as already mentioned, GS is a key component of CCS.[14]

GS is therefore one of a portfolio of options that could be deployed to reduce CO_2 emissions to the atmosphere and help to mitigate climate change. Other options include, but are not limited to, energy conservation, efficiency improvements, and the use of alternative fuels and renewable energy sources, including solar and wind power.

---

[1] Report of the Interagency Task Force on Carbon Capture and Storage, August 2010, p. 8.

[2] Carbon Dioxide Capture and Storage. Intergovernmental Panel on Climate Change (IPCC), 2005.

[3] Guidelines for Carbon Dioxide Capture, Transport, and Storage. World Resources Institute, 2008.

[4] CRS Report for Congress. Carbon Dioxide (CO_2) Pipelines for Carbon Sequestration: Emerging Policy Issues. Paul W. Parfomak and Peter Folger. January 17, 2008.

[5] Carbon Dioxide Capture and Storage. IPCC, 2005.

[6] Ibid.

[7] National Research Council (2011) *Climate Stabilization Targets: Emissions, Concentrations, and Impacts over Decades to Millennia.* Washington, DC: National Academies Press.

[8] Karl, T., J. Melillo, and T. Peterson (Eds.) (2009) *Global Climate Change Impacts in the United States.* Cambridge University Press, Cambridge, United Kingdom.

[9] Trenberth, K.E. et al. (2007) Observations: Surface and Atmospheric Climate Change. In: *Climate Change 2007: The Physical Science Basis.* Contribution of Working Group I to the Fourth Assessment Report of the Intergovernmental Panel on Climate Change [Solomon, S., D. Qin, M. Manning, Z. Chen, M. Marquis, K.B. Averyt, M. Tignor and H.L. Miller (eds.)]. Cambridge University Press, Cambridge, United Kingdom and New York, NY, USA.

[10] National Oceanic and Atmospheric Administration (NOAA) (2009a) *The Annual Global (land and ocean combined) Anomalies (degrees C).* *ftp://ftp.ncdc.noaa.gov/pub/data/anomalies/annual.land_ocean.90S.90N.df_1901-2000mean.dat.* Accessed April 28, 2011.

[11] Karl, T., J. Melillo, and T. Peterson (Eds.) (2009) *Global Climate Change Impacts in the United States.* Cambridge University Press, Cambridge, United Kingdom.

[12] IPCC (2007b) Summary for Policymakers. In: *Climate Change 2007: Impacts, Adaptation and Vulnerability.* Contribution of Working Group II to the Fourth Assessment Report of the Intergovernmental Panel on Climate Change [M.L. Parry, O.F. Canziani, J.P. Palutikof, P.J. van der Linden and C.E. Hanson (eds.)]. Cambridge University Press, Cambridge, United Kingdom and New York, NY, USA.

[13] Karl, T., J. Melillo, and T. Peterson (Eds.) (2009) *Global Climate Change Impacts in the United States.* Cambridge University Press, Cambridge, United Kingdom.

[14] Report of the Interagency Task Force on Carbon Capture and Storage, August 2010, p. 14.

C. What other recent EPA rulemakings are related to CCS?

In an effort to establish a regulatory framework that supports the future development and deployment of CCS technologies, EPA has set out a goal to provide the regulatory certainty needed to foster industry adoption of CCS. As mentioned above, EPA believes that GS is a key climate change mitigation technology. Therefore, providing a consistent regulatory approach to GS will promote its future use in the United States. Two important EPA rulemakings that directly address GS activities are requirements under the *Greenhouse Gas (GHG) Reporting Program;* and *Federal Requirements under the Underground Injection Control (UIC) Program for Carbon Dioxide (CO_2) Geologic Sequestration (GS) Wells.* These are described in more detail below.

- *EPA Greenhouse Gas (GHG) Reporting Program:* The GHG Reporting Program was established under authority of the Clean Air Act (CAA) and requires reporting of GHG emissions and other relevant information from certain source categories in the United States. On October 30, 2009, EPA issued a final rule (74 FR 56260) that requires reporting by facilities with production process units that capture a CO_2 stream under subpart PP of the program. These facilities are required to report the amount of CO_2 in a stream captured, and provide information on the downstream CO_2 end use (*e.g.,* food and beverage, EOR, GS, etc.). On December 1, 2010, EPA issued a final rule (75 FR 75060) that requires reporting from facilities that inject CO_2 underground for GS under subpart RR of the program. The rule requires facilities that inject CO_2 underground for GS to report basic information on CO_2 received for injection, develop and implement an EPA-approved site-specific monitoring, reporting and verification plan, and report the amount of CO_2 sequestered using a mass balance approach and annual monitoring activities.
- *EPA Class VI Underground Injection Control (UIC) Rule:* On July 25, 2008, EPA proposed to amend the UIC program (73 FR 43492) to establish a new class of injection well (Class VI) and to establish minimum Federal requirements under the Safe Drinking Water Act (SDWA) for the underground injection of CO_2 for the purpose of GS. The proposed requirements would ensure that GS is conducted in a manner that protects Underground Sources of Drinking Water (USDWs) from endangerment, by tailoring existing components of the UIC program to address the unique nature of GS. On December 10, 2010, EPA finalized the new UIC Class VI injection well standards. These requirements are intended to provide certainty to industry and the public about the requirements that would apply to injection for purposes of GS, by providing consistency regarding the requirements across the U.S., and transparency about what requirements apply to permitted UIC Class VI facility owners or operators. For a more detailed discussion of these requirements, see the final rule in the December 10, 2010 **Federal Register** (75 FR 77230).

D. RCRA Applicability to GS Activities

In response to the July 25, 2008 proposed rule for UIC Class VI wells, EPA received a number of comments regarding the potential applicability of RCRA subtitle C to CO_2 streams being geologically sequestered. As a result of those comments, EPA decided to initiate work on today's proposal. EPA also considered those RCRA-related comments in the development of today's proposed rule. EPA notes, however, that should persons wish to comment on the RCRA applicability issues raised by today's proposal, it is necessary to submit comments to the docket established for today's proposed rule as described above in the **ADDRESSES** section of this **Federal Register** notice. EPA will not provide further responses to comments submitted on the UIC rule as part of this rulemaking. In addition, today's proposal is not reopening the UIC Class VI final rule, nor will EPA respond to comments related only to that rule.

At this time, EPA has little information to conclude that CO_2 streams would qualify as RCRA hazardous wastes, which would make them subject to EPA's comprehensive RCRA hazardous waste management regulations. However, commenters have cited the potential for RCRA hazardous waste requirements to attach to some CO_2 streams (*i.e.,* some CO_2 streams might be classified as hazardous waste and therefore, would be subject to RCRA subtitle C), as a significant impediment to widespread deployment of CCS technologies. Today's proposal seeks to address this concern and provide regulatory clarity through a revised RCRA regulatory approach for CO_2 streams. Simultaneously, as discussed below, EPA expects that management in accordance with the conditions in today's proposal will provide no reduced protection to human health and the environment.

After issuance of the proposed UIC Class VI rule, EPA received public comments that the proposed requirements were unclear as to whether the CO_2 stream would be a RCRA hazardous waste, and expressed concern that this created uncertainty regarding the type of permit needed for GS. Many commenters stated that a CO_2 stream should not be treated as a RCRA hazardous waste on the grounds that it is neither a listed hazardous waste nor exhibits a hazardous characteristic, or is even a solid waste. Other commenters, however, asserted that CO_2 in the presence of water could exhibit the RCRA corrosivity characteristic. Additionally, some commenters raised the issue of whether the analytic procedures used under RCRA (in particular, the toxicity characteristic leaching procedure, TCLP) [15] can be applied to supercritical CO_2 streams, and whether or not the UIC Class VI regulations would better ensure the proper management of CO_2 streams, compared with the RCRA subtitle C hazardous waste requirements.

EPA believes that the RCRA hazardous waste regulations can apply to CO_2 streams being geologically sequestered. Subtitle C of RCRA and its implementing regulations establish a ''cradle to grave'' regulatory scheme over certain ''solid wastes'' which are also ''hazardous wastes.'' RCRA defines solid waste as ''any garbage, refuse, sludge from a waste treatment plant, water supply treatment plant, or air pollution control facility and other discarded material, including solid, liquid, semisolid, or contained gaseous material * * *.'' See RCRA 1004(27), 42 U.S.C. 6903(27). EPA has further defined the term ''solid waste'' for purposes of its RCRA hazardous waste regulations. 40 CFR 261.2. To be considered a hazardous waste, a material first must be classified as a solid waste. Under EPA's regulations, generators of solid waste are required to determine whether their wastes are hazardous wastes. 40 CFR 262.11. A solid waste is a hazardous waste if it exhibits any of four characteristics (ignitability, corrosivity, reactivity, or toxicity), 40 CFR 261.20–.24, or is a listed waste, 40 CFR 261.30–.33 (these include wastes from non-specific sources, such as spent solvents; by-products from specific industries; and discarded, unused commercial chemical products).

A supercritical CO_2 stream injected into a permitted UIC Class VI well for

[15] Toxicity Characteristic Leaching Procedure, or TCLP. See 40 CFR 261.24. A solid waste is defined as hazardous when a representative sample of that waste leaches a particular chemical or compound—for example, arsenic—above a specified regulatory concentration, using the TCLP.

purposes of GS is a RCRA solid waste, as it is a ''discarded material'' within the plain meaning of the term in RCRA § 1004(27). Courts have stated that the plain meaning of ''discarded material'' refers to materials that have been disposed of, abandoned or thrown away.[16] This clearly applies to supercritical CO_2 stream (which, as already stated, is rather unique in that it has properties intermediate between a liquid and a gas) injected into UIC Class VI wells, regardless of whether the material is a hazardous waste or not. An entity involved in the CCS process may generate CO_2 that qualifies as a solid waste under the RCRA hazardous waste regulations by making the decision to discard the material through abandonment by disposing of the material (see 40 CFR 261.2(a)(2)(i) and (b)(1)). Once the decision is made that the supercritical CO_2 stream will be sent to a UIC Class VI well for discard, EPA considers this material to be a solid waste. This decision may be made upstream of the injection well facility. As discussed above, EPA's regulations require that generators of a solid waste determine whether their wastes are hazardous wastes, and if so, manage them in accordance with EPA's RCRA hazardous waste regulations. 40 CFR 262.11.

One commenter to the UIC proposed rule suggested that the captured CO_2 stream was exempt from the RCRA hazardous waste regulations under the exemption for ''fly ash waste, bottom ash waste, slag waste, and flue gas emission control waste, generated primarily from the combustion of coal or other fossil fuels,'' also referred to as the ''Bevill exemption.'' (See 40 CFR 261.4(b)(4).)

EPA studied the fossil fuel combustion wastes as directed by Congress, and published two Reports to Congress,[17] and issued two Regulatory Determinations on the management and use of coal and other fossil fuel combustion products, one on August 9, 1993 and a second one on May 22, 2000 (58 FR 42466 and 65 FR 32214, respectively). CO_2 captured for purposes of GS was not included in either of these Regulatory Determinations, or in the underlying studies upon which these determinations were based. The Agency has consistently interpreted the § 261.4(b)(4) exemption as only encompassing those wastes that were studied, and EPA did not study CO_2 that has been captured for GS. Therefore, EPA believes that the CO_2 streams discussed in today's proposed rule are not included within the Bevill exemption under § 261.4(b)(4).[18]

EPA notes that CO_2 streams are not listed RCRA hazardous wastes (*i.e.,* CO_2 streams are not specifically identified as one of the hazardous wastes listed in 40 CFR part 261, subpart D). However, the CO_2 stream would be a hazardous waste if it exhibits any of the hazardous characteristics in 40 CFR part 261, subpart C, or, is mixed with a listed hazardous waste. See § 261.3(a)(iv). Under the UIC Class VI final rule, injection site owners and operators must determine whether the CO_2 stream is hazardous under the RCRA regulations, and if so, injection of the CO_2 stream may only occur in a UIC Class I hazardous waste injection well.[19] Conversely, UIC Class VI wells cannot be used for the injection of RCRA hazardous wastes. Today's proposal, if finalized, would allow CO_2 streams that would otherwise qualify as RCRA hazardous wastes to be managed in a Class VI well, provided that they meet the conditions of this proposed rule.

As already noted, commenters to the UIC Class VI proposed rule also raised questions about the appropriateness and feasibility of applying the RCRA hazardous waste characteristics to CO_2 streams and, in particular, the Toxicity Characteristic (TC). See § 261.24. Some commenters stated that the TCLP test method associated with the TC could not be used on materials other than solids or liquids, and that EPA would have to develop new testing regulations and guidelines specifically for evaluating supercritical CO_2. Commenters also stated that the TC regulation was inappropriate for CO_2 streams because the TC was ''* * * designed to assess the threat waste would have in a municipal landfill disposal scenario, a scenario that * * * is inherently inapplicable to uncontained supercritical CO_2.'' Many commenters also expressed concern over the uncertainty in determining how the RCRA hazardous waste regulations, including the hazardous waste identification issues described here, apply to CO_2 streams being sequestered in UIC Class VI wells.

In light of these comments, EPA reiterates that no hazardous waste listings apply specifically to CO_2 streams; therefore, a CO_2 stream could only be defined as a hazardous waste if it exhibits a hazardous waste characteristic as defined in 40 CFR part 261, subpart C.[20] Regarding the feasibility of testing CO_2 streams, EPA acknowledges the commenter's concern, but also notes that the hazardous waste regulations allow generators to apply their knowledge—in lieu of testing—of the hazard characteristic of a waste, in light of the materials or processes used, to determine whether that waste is a characteristic hazardous waste under RCRA.[21] 40 CFR 262.11(c)(2). EPA also notes that methods exist for sampling and analyzing gaseous emissions in order to identify and quantify hazardous constituents that may be present.[22] Regarding whether a TCLP leach test can be applied to a supercritical CO_2 stream, EPA notes that the TC regulation, and the TCLP test method, allow for measurement of total constituent concentrations in a waste, in lieu of running the leach test, and under certain circumstances even require it (such as where wastes are liquids that contain less than 0.5% solids).[23] However, EPA acknowledges the commenters' underlying concerns related to RCRA characterization, and requests comment on this issue.

E. CO_2 Stream Characterization

As noted above, EPA is proposing to conditionally exclude from the

[16] The proposed rule is not intended to affect the status of CO_2 that is injected into wells other than UIC Class VI wells. For example, CO_2 that is used for enhanced oil or gas recovery (EOR/EGR) in other than UIC Class VI wells, where some sequestration may occur in the process of recovering gas or oil, is beyond the scope of this proposal.

[17] Report to Congress: Wastes from the Combustion of Coal by Electric Utility Power Plants, February 1988, EPA–530–SW–88–002; and Report to Congress: Wastes From the Combustion of Fossil Fuels, Vol. 1 & 2, U.S. EPA, March 1999, EPA–530–S–99–010 and EPA–530–R–99–010.

[18] EPA notes that even if CO_2 streams from the combustion of fossil fuels were exempt from regulation as hazardous waste under § 261.4(b)(4)—which it does not believe to be the case—the Bevill exemption would only apply to CO_2 generated from the combustion of materials in boilers to generate steam for the purpose of generating energy, and not to other CO_2 streams generated from other sources.

[19] As already mentioned, a hazardous waste determination must be made when a waste is first generated (§ 262.11); however, knowing whether a solid waste is a hazardous waste is necessary at any point during the management of that waste, in order for persons to ensure that they are in compliance with the hazardous waste requirements if and when they are managing hazardous waste. See 40 CFR 261.3(b)(3) and 45 FR 33096 (May 19, 1980).

[20] It is also possible that a CO_2 stream could become a hazardous waste if it is mixed with a listed hazardous waste, or, mixed with a characteristic hazardous waste and the resultant mixture exhibits a characteristic of hazardous waste. This is commonly referred to as the ''mixture rule.'' See 40 CFR 261.3. We note that today's proposed exemption includes the condition that prohibits the mixing of CO_2 streams with hazardous waste.

[21] Any persons claiming that a waste is non-hazardous, based on knowledge in lieu of testing, should be prepared to substantiate this claim.

[22] *E.g.,* EPA notes that existing analytical test methods, such as SW–846 Methods 0060, 0010, and 0031, are available to quantify the levels of various hazardous constituents in gaseous streams, although sampling a supercritical CO_2 stream may require particular sampling protocols.

[23] See SW–846, Method 1311, Section 2.1.

definition of hazardous waste CO_2 streams captured, transported (or otherwise delivered to) and injected into permitted UIC Class VI wells for purposes of GS. At this time, EPA has little information to conclude that CO_2 streams would qualify as RCRA hazardous wastes, which would make them subject to EPA's comprehensive RCRA hazardous waste management regulations. Today's proposal is intended to provide clarity for deployment of CCS under conditions that EPA believes would not present a substantial risk to human health and the environment. However, EPA acknowledges that at this time, it does not have full knowledge of the range of possible CO_2 stream compositions. Today's proposed conditional exclusion is based upon EPA's existing knowledge of the composition of CO_2 streams, and its analysis that compliance with the existing standards and regulations designed to prevent any exposure of CO_2 (and any associated impurities) would render additional regulation under RCRA subtitle C unnecessary.

Nevertheless, EPA is proceeding with this proposal, and notes that the UIC Class VI regulations include requirements that the owner or operator of the injection well provide an analysis of the physical and chemical characteristics of the CO_2 stream, both during permit application and periodically during operation (See 40 CFR 146.82, 146.90 and 146.91). The permit-issuing authority is also authorized under EPA's UIC permit regulations to add any additional conditions to the permit, as necessary, to assure compliance with applicable SDWA requirements (40 CFR 146.52(b)). Under this authority, the UIC Program Director (EPA or a State permitting authority) may add specific testing or chemical/waste limitations to the permit to prevent endangerment of USDWs, or to assure that unauthorized wastes are not injected with the CO_2 stream.

EPA has reviewed estimates of CO_2 stream composition that were calculated using information, such as the composition of flue gas from the burning of fossil fuels and other likely sources, existing flue gas emission control technologies (*e.g.,* electrostatic precipitators and scrubbers), and data from applied capture technology.[24] These estimates indicate that captured CO_2 could contain (based upon the information used in developing those estimates) low concentrations of hazardous constituents (*e.g.,* estimated concentrations expressed in parts per million by volume, or ppmv, are: 0.0022–0.0097 arsenic, 0.0462–0.4623 barium, 0.0002–0.0085 cadmium, 0.0016–0.0171 chromium, 0.0022–0.0028 mercury, 0.0011–0.0045 lead, and 0.0074–0.0244 selenium). EPA notes that these contaminants derived from the combustion flue gas are relevant to the TC regulation in § 261.24.[25] These estimates also indicate that the types of impurities and their concentrations would likely vary by facility, coal composition, plant operating conditions, and pollutant removal and carbon capture technologies.

EPA solicited comment in the July 25, 2008 proposed UIC Class VI rule on the presence of impurities in CO_2 streams, but did not receive any analytical data on the composition of captured CO_2 streams in response. As various CCS pilot projects[26] move forward and continue to generate information, EPA expects the amount of available analytical data on captured CO_2 to increase. In addition, EPA expects that data will become available under the recently promulgated UIC Class VI regulations. As discussed above, the final UIC Class VI regulations require that prior to issuance of a permit, the owner or operator of the well must submit to the Director[27] proposed operating data for the proposed GS site, including an analysis of the chemical and physical properties of the CO_2 stream (40 CFR 146.82(a)(7)(iv)). The UIC rule also requires that, throughout the operational life of the Class VI well, the injected CO_2 stream be analyzed by owners or operators with sufficient frequency to yield data representative of its physical and chemical characteristics (40 CFR 146.90(a)). Owners or operators must also submit semi-annual reports that include any changes to the physical, chemical, and other relevant characteristics of the CO_2 stream from the proposed operating data (40 CFR 146.91(a)(1)). While guidance is still being developed regarding these requirements, at a minimum, the physical characteristics of the CO_2 stream will include temperature and pressure, while the chemical characteristics will include pH, carbon dioxide purity (as a percent), as well as concentrations of non-CO_2 constituents (either in ppmv or in percent). These non-CO_2 constituents may include, but are not limited to, sulfur dioxide (SO_2), hydrogen sulfide (H_2S), nitrous oxides (NO_X), carbon monoxide (CO), methane (CH_4), other hydrocarbons, water vapor (H_2O), as well as certain contaminants, that are also defined as hazardous contaminants in 40 CFR 261.24, such as arsenic, mercury, and selenium. EPA expects that these data will provide an indication of any impurities that may be present, their concentrations, and whether such impurities might alter the corrosivity or other properties of the CO_2 stream after injection.

EPA today requests analytical data on the physical and chemical characteristics of captured CO_2, including the concentrations of hazardous contaminants, CO_2 content, information on the type of CO_2 capture process used, and how the samples were collected and analyzed. This data will allow EPA to gain a better understanding of the nature and characteristics of captured CO_2 streams.

IV. Detailed Discussion of This Proposed Rule

EPA is proposing to revise the regulations for hazardous waste management under RCRA to exclude from the definition of hazardous waste CO_2 streams that would otherwise be defined as hazardous, when these CO_2 streams are managed under certain conditions. The Agency believes that this amendment to the RCRA hazardous waste rules, if finalized, will substantially reduce the uncertainty associated with defining and managing these CO_2 streams under RCRA subtitle C. For the reasons discussed below, EPA believes that the management of these CO_2 streams in accordance with the proposed conditions does not present a substantial risk to human health and the environment. These proposed conditions include, but are not limited to, compliance with the existing regulatory regimes governing the transportation of the CO_2 stream, and its injection in a UIC Class VI permitted well.

[24] Apps, J.A., *A Review of Hazardous Chemical Species Associate with CO_2 Capture from Coal-Fired Power Plants and Their Potential Fate in CO_2 Geologic Storage,* Lawrence Berkeley National Laboratory, March 2006.

[25] Ibid, Table 13b. EPA notes that the presence of hazardous constituents or contaminants does not automatically mean that a CO_2 stream is a hazardous waste.

[26] See Exhibits 1 and 2 in EPA's analysis of the potential costs and benefits associated with this action, entitled *Assessment of the Potential Costs, Benefits, and Other Impacts of the Conditional Exclusion from the RCRA Definition of Hazardous Waste for CO_2 Streams Managed in UIC Class VI Wells for the Purposes of Geologic Sequestration, as Proposed.* A copy of this document is available in the docket established for this action.

[27] As used here in the context of the UIC program, 'Director' means the person responsible for permitting, implementation, and compliance of the UIC program. For UIC programs administered by EPA, the Director is the EPA Regional Administrator or his/her authorized representative; for UIC programs in Primacy States, the Director is the person responsible for permitting, implementation, and compliance of the State, Territorial, or Tribal UIC program. 40 CFR 144.3.

A. Authority for Conditional Exclusion From RCRA Subtitle C Requirements

EPA has previously interpreted RCRA section 3001(a) to authorize the issuance of ''conditional exemptions'' from the requirements of subtitle C, where it determines that ''a waste might pose a hazard only under limited management scenarios, and other regulatory programs already address such scenarios.'' 62 FR at 6636 (February 12, 1997); 66 FR at 27222–27223 (May 16, 2001). Today's proposal takes a similar approach to those earlier rules.

Section 3001(a) provides the Agency with flexibility to consider the need for regulation in deciding whether to list or identify a waste as hazardous. Specifically, RCRA section 3001(a) requires that EPA, in determining whether to list a waste as a hazardous waste, or to otherwise identify a waste as a hazardous waste, decide whether a waste ''should be subject to'' the requirements of subtitle C. Hence, RCRA section 3001 authorizes EPA to determine when subtitle C regulation is appropriate. EPA has consistently interpreted section 3001 of RCRA to give it broad flexibility in fashioning criteria for hazardous wastes to enter or exit the subtitle C regulatory system. EPA's longstanding regulatory criteria for determining whether wastes pose hazards that require regulatory control incorporate the idea that a waste that is otherwise hazardous may not present a hazard if already subject to adequate regulation. (See, *e.g.,* 40 CFR 261.11(a)(3)(x), which requires EPA to consider action taken by other governmental agencies or regulatory programs based on the health or environmental hazard posed by the waste.)

EPA's interpretation is further supported by the text of RCRA sections 1004(5), and 3002–3004, and RCRA's legislative history. This interpretation has also been upheld upon judicial review. See, *e.g., Military Toxics Project* v. *EPA,* 146 F.3d 948 (D.C. Cir. 1998) (upholding conditional exemption for storage of military munitions, based on EPA determination that such wastes are subject to binding standards that meet or exceed RCRA standards, in addition to an institutional oversight process).

The statutory definition of hazardous waste, section 1004(5)(B), informs EPA's interpretation that EPA may consider good management practices in determining the need to regulate waste as hazardous. That section defines a 'hazardous waste' as ''a solid waste, or combination of solid wastes, which because of its quantity, concentration, or physical, chemical or infectious characteristics may * * * (B) pose a substantial present or potential hazard to human health or the environment *when improperly treated, stored, transported, or disposed of, or otherwise managed.''* (Emphasis added.) EPA has interpreted the statutory definition as incorporating the idea that a waste that is otherwise hazardous does not require regulation so long as it is properly managed. For example, EPA's standards for listing hazardous wastes require consideration of a waste's potential for mismanagement. See 40 CFR 261.11(a)(3)(vii) (incorporating the language of RCRA section 1004(5)(B) and requiring EPA to consider ''plausible types of improper management'').

The statute also directs EPA to regulate hazardous waste generators (RCRA § 3002(a)), transporters (RCRA § 3003(a)) and treatment, storage and disposal facilities (RCRA § 3004(a)) ''as may be necessary to protect human health and the environment.'' By extension, the decision of when a waste should be subject to the regulatory requirements of subtitle C is a question of whether such regulatory controls are necessary to protect human health and the environment.

Thus, where a waste might pose a hazard only under limited management scenarios, and other regulatory programs already address such scenarios, EPA is not required to classify a waste as hazardous waste subject to regulation under subtitle C. At least three decisions by the U.S. Court of Appeals for the D.C. Circuit provide support for this approach to regulating wastes as hazardous waste only where necessary to protect human health and the environment. In *Military Toxics Project* v. *EPA,* 146 F.3d 948 (D.C. Cir. 1998), the court upheld a conditional exemption whereby the storage and transportation of certain military munitions are not considered hazardous waste subject to regulation under RCRA subtitle C, provided the munitions are stored and transported in compliance with regulations issued by the Department of Defense and the Department of Transportation, respectively. See 40 CFR 266.203, 266.205. The court ruled that EPA's interpretation of RCRA as authorizing a conditional exemption is ''a permissible construction of the statute.'' 146 F.3d at 958. The court cited its own precedent as recognizing '''that Congress intended the agency to have substantial room to exercise its expertise in determining the appropriate grounds for listing,' '' *id.* (citing *NRDC* v. *EPA,* 25 F.3d 1063, 1070 (D.C. Cir. 1994)), and concluded that, although the military munitions rule ''does not involve the listing regulations at issue in *NRDC* v. *EPA,* we think the principle at work there also supports the conditional exemption at issue here.'' *Id.*

In *NRDC* v. *EPA,* the court held that EPA appropriately used its discretion in relying on several existing regulatory frameworks governing used oil in determining not to list certain used oils as a hazardous waste. *NRDC,* 25 F.3d at 1071. Similarly, in *Edison Electric Institute* v. *EPA,* 2 F.3d 438 (D.C. Cir. 1993), the court upheld a temporary exemption from subtitle C for petroleum-contaminated media based on the fact that the potential hazards of such materials are already controlled under the underground storage tank regulations under RCRA subtitle I. In reaching its decision, the court considered the fact that the subtitle I standards could prevent threats to human health and the environment to be an important factor supporting the exemption. *Id.* at 453.

The legislative history of RCRA subtitle C also supports this interpretation, stating that ''the basic thrust of this hazardous waste title is to identify what wastes are hazardous in what quantities, qualities, and concentrations, *and the methods of disposal which may make such wastes hazardous.''* H. Rep. No. 94–1491, 94th Cong., 2d Sess. 6 (1976), reprinted in A Legislative History of the Solid Waste Disposal Act, as Amended, Congressional Research Service, Vol.1, 567 (1991) (emphasis added). Finally, as discussed above, in proposing this conditional exemption from RCRA, EPA is in part relying on the regulatory controls for Class VI wells, under the UIC program of the SDWA, 42 U.S.C. 300f *et seq.* EPA notes that such reliance is also consistent with the direction provided in section 1006(b) of RCRA, which directs EPA to integrate the provisions of RCRA, for purposes of administration and enforcement and to avoid duplication, to the maximum extent practicable, with those of certain other statutes, including the SDWA, to the extent that it can be done in a manner that is consistent with the goals and policies of both RCRA and the other relevant statute(s).

B. CO_2 Streams Managed Prior to Underground Injection

Under the subtitle C hazardous waste program, the generator requirements (40 CFR part 262) contain provisions designed to ensure that hazardous wastes are properly managed by persons who generate the wastes. This is accomplished through certain requirements governing the temporary

storage (*i.e.,* accumulation) of hazardous wastes, in units, such as tanks or containers, at the site of generation. These requirements include technical requirements for the tanks or containers, and time limits on hazardous waste storage, if the waste is to be sent off-site to a treatment, storage or disposal facility.[28] These requirements also include recordkeeping and reporting, and certain pre-transport requirements, such as packaging, labeling, and preparing a hazardous waste manifest to accompany the waste. Generators must also notify EPA of their hazardous waste management activity, and obtain an EPA identification (ID) number. Likewise, hazardous waste transporters (*e.g.,* persons transporting waste, including over the highway or by rail) have certain requirements in 40 CFR part 263, to ensure that the hazardous wastes are properly transported to a hazardous waste treatment, storage, or disposal facility. These transporter requirements include notifying EPA and obtaining an EPA ID number, recordkeeping, and compliance with the hazardous waste manifest. EPA notes that under the RCRA subtitle C regulations, a hazardous waste manifest is not required for hazardous wastes sent off-site via pipeline.[29]

For CO_2 streams that are captured, compressed, and transported to a UIC Class VI well, EPA believes that the full set of subtitle C generator and transporter requirements are not necessary, because they do not provide any additional protection over existing regulatory requirements. Regarding the generator requirements, EPA believes that the process of capturing and compressing CO_2 prior to delivery to a UIC Class VI facility via a pipeline, as the Agency understands it, will not involve storage at the generator facility (*i.e.,* at the CO_2 source), but rather will occur in a continuous fashion (capture process → compression/dehydration → pipeline insertion). Once in the pipeline, EPA believes the applicable DOT requirements (which apply to supercritical CO_2 streams regardless of whether or not these materials meet the definition of hazardous waste) will ensure that CO_2 streams are managed in a manner that addresses the potential risks to human health and the environment that these materials may pose, prior to arrival at a Class VI injection well facility.

1. CO_2 Streams Generated at Capture Sites

While certain technologies for removing (capturing) CO_2 have been in use commercially for over 60 years (*e.g.,* natural gas processing, production of food-grade CO_2), research has been underway to develop more cost-effective technologies to capture CO_2 for purposes of CCS. Regardless of the capture technology that is ultimately implemented, information currently available to EPA indicates that once the CO_2 stream is captured at the source (*e.g.,* coal-fired power plant), it will be dehydrated (to meet pipeline specifications preventing corrosion) and compressed (to match designated pipeline pressures) in preparation for transport, primarily via CO_2 pipeline.[30] [31]

However, evaluating in more detail how CO_2 streams will be managed at the CO_2 source prior to GS in a UIC Class VI facility, and what regulations or other standards might apply to these activities in lieu of the RCRA generator standards, has proven somewhat difficult based on a review of the literature. This is either because many of the newer capture technologies are still in the developmental stages, or because the more established capture technologies used in commercial CO_2 capture have not yet been scaled up to large facilities, such as coal-fired power plants. Nonetheless, EPA attempted to assess how captured CO_2 streams would be managed in the context of the RCRA generator requirements identified above (*e.g.,* EPA notification, standards for tanks or containers, time limits for on-site storage, recordkeeping and reporting, packaging, labeling, manifesting, etc.).

First, it is unclear from existing information sources whether captured CO_2 has been or will be stored at the generator site prior to insertion into a pipeline, so EPA examined the feasibility of storing captured CO_2 streams at the source, since storage is a hazardous waste management activity of concern at RCRA generator sites generally.[32] EPA looked at estimates of CO_2 capture rates both in the CCS projects currently underway, as well as future scenarios where CO_2 capture is deployed at full scale. A review of commercially-available CO_2 capture facilities in 2009 identified 17 facilities, with CO_2 capture rates ranging from 50,000 metric tons/year to 3.63 million metric tons per year.[33] According to the 2010 CCS Task Force Report, the largest of these capture rates (3.63 million metric tons/yr) is close to the volume of CO_2 required for capture at electric utility generating plants. It is also estimated that a 500MW (megawatt) coal-fired power plant emits close to 3 million metric tons of CO_2 per year.[34] Similarly, the Mountaineer, West Virginia CCS project, which is currently capturing 100,000 metric tons CO_2/year, will eventually scale up to 1.5 million metric tons of CO_2 per year from an emission slipstream representing 235MW. See 75 FR 32171, June 7, 2010. An annual CO_2 capture rate of 1.5 million metric tons translates to approximately 4,100 metric tons CO_2 per day, or (at temperatures and pressures close to supercritical) 34,000 cubic meters, which is approximately 9 million gallons of CO_2 per day. Even the smallest annual capture rate mentioned above (50,000 metric tons per year) equates to approximately 137 metric tons of CO_2 per day, or 1,142 cubic meters, which is approximately 301,568 gallons per day.

Based on these estimates, the volume of CO_2 streams either being captured, or anticipated to be captured, are quite large, and would require pressure vessels (*i.e.,* tanks engineered for pressurized material) of inordinate size at the low end of these estimates, and are not likely to exist or be practicable at the upper end of these estimates. Therefore, EPA does not envision these large volumes of captured CO_2 streams being stored on-site, and instead assumes that the CO_2 streams will be dehydrated, compressed, and either injected on-site, or sent off-site, in a continuous fashion. EPA believes that even if the CO_2 were defined as a hazardous waste, under the scenario described above, where captured CO_2 streams are delivered in a continuous fashion to either on-site injection wells,

[28] The generator regulations in 40 CFR part 262 provide for limited, temporary on-site hazardous waste storage (accumulation) without a RCRA permit or being subject to the interim status standards, provided certain conditions are met (see § 262.34). While generators are not required to send hazardous waste off-site for disposal, they often do so because they do not wish to engage in RCRA-permitted hazardous waste activity on-site.

[29] This is because use of the hazardous waste manifest is triggered by the transport of hazardous waste (see discussion in Section IV.B.2. in this preamble, including Footnote 41).

[30] DOE/NETL's Carbon Capture R&D Program for Existing Coal-Fired Power Plants, DOE/NETL–2009–1356, February 2009.

[31] Figueroa, Jose D. *et al.,* 2008. *Advances in CO_2 capture technology—the U.S. Department of Energy's Carbon Sequestration Program,* International Journal of Greenhouse Gas Control 2, 2008 (9–20).

[32] The term ''store'' or ''storage'' used throughout this preamble refers to the holding of waste for a temporary period above ground, and does not refer to the placement of CO_2 streams in underground formations through the process of GS. See 40 CFR 260.10.

[33] CCS Task Force Study, August, 2010, Appendix A.

[34] Carbon Dioxide Capture and Storage. Intergovernmental Panel on Climate Change (IPCC), 2005, p. 61.

or to a pipeline for off-site injection (and presumably in a totally-enclosed manner, due to the need to maintain proper pressures) there would not be any substantive [35] RCRA subtitle C requirements applicable to this activity. EPA notes that there are no RCRA hazardous waste standards for pipelines, unless the pipelines are ancillary to a regulated hazardous waste tank, which does not appear to be the case here.[36]

Regarding other generator requirements, such as notification to EPA of hazardous waste activity, and recordkeeping and reporting, EPA believes there will be equivalent notice and reporting for facilities engaged in CO_2 capture for purposes of GS. The new GHG reporting requirements promulgated on October 30, 2009 (74 FR 56260) will provide information to the Agency regarding individual facilities engaged in CO_2 capture activities. Under 40 CFR part 98, subpart PP, of the GHG rule, facilities with production process units that capture a CO_2 stream must annually report certain information to EPA, such as the amount of CO_2 in the stream captured, and information on the fate of the CO_2 stream (*i.e.,* the downstream 'end use' of the CO_2), including GS. See 40 CFR 98.426. The GHG rule also requires comprehensive recordkeeping, and records that must be retained for three years. See § 98.3(g) and § 98.427. EPA points out that these GHG requirements apply irrespective of whether a facility claims the RCRA exclusion being proposed today, if finalized.

Therefore, with respect to generators of CO_2 streams, EPA believes there would not be any additional protection to human health or the environment through the RCRA hazardous waste regulations of these operations. Absent any storage, the regulation of the movement of captured CO_2 streams from the point of capture to either an on-site UIC Class VI injection well, or to an off-site DOT-regulated pipeline (discussed below), would not be significantly different in the presence or absence of today's proposed conditional exclusion. While it is not clear what would be the procedure during maintenance or upset circumstances (such as if the capture process could not function), EPA assumes that the source emissions would be diverted for release under the facility's Clean Air Act permit.

EPA requests information on whether EPA's estimates for captured CO_2 volumes are accurate and reasonable, and whether the CO_2 that is captured could be stored on-site prior to being sent elsewhere for GS or any other purpose; if so, EPA requests detailed information on the duration and method of storage, and what existing regulatory or voluntary controls and standards apply to such storage. EPA also requests information on the units and processes involved after the CO_2 is captured, and before it is either injected on-site, or sent off-site. Finally, EPA requests comment and information on the procedures that have been or are expected to be used during maintenance and upset circumstances of the carbon capture system.

2. Transportation of CO_2 Streams to UIC Class VI Injection Well

While there may be instances where captured CO_2 streams are injected on-site, most generators will likely transport their captured CO_2 streams to UIC Class VI wells located off-site, and therefore EPA considered the transportation of CO_2 streams under today's proposed conditional exclusion. Carbon dioxide itself is listed under the DOT regulations as a Class 2.2 hazardous material (non-flammable gas). See definitions in 49 CFR 172.101 and 173.115(b). By this designation as a hazardous material, CO_2 becomes subject to regulations established by DOT for the safe and secure transportation of hazardous materials in commerce. DOT's Pipeline Hazardous Materials Safety Administration (PHMSA) is charged with overseeing the movement of hazardous materials, including CO_2, over all modes of transportation. For purposes of this proposal, EPA examined existing requirements for pipeline, and non-pipeline, modes of transportation.

Pipeline Transport—EPA presumes that pipeline transport of CO_2 streams will be the principal mode of transport for CCS activities, either using existing or newly-built pipelines. For example, in 2008, a Congressional Research Service report stated that ''[t]ransporting captured CO_2 in relatively limited quantities is possible by truck, rail, and ship, but moving the enormous quantities of CO_2 implied by a widespread implementation of CCS technologies would likely require a dedicated interstate pipeline network.'' [37] In the United States, there are approximately 3,600 miles of dedicated CO_2 pipelines, carrying about 50 million metric tons of CO_2 per year, primarily for EOR activities in the oil and gas industry.[38] Experience and knowledge gained by the oil and gas industry, which has used CO_2 pipelines over the past 35 years to transport large volumes of CO_2 to oil fields, is directly applicable to carbon capture and GS operations and, thus, there is much experience with this activity.

Pipeline transportation of CO_2 is subject to the PHMSA requirements in 49 CFR part 195, which apply to pipeline facilities used in the transportation of hazardous liquids or supercritical CO_2.[39] As defined in 49 CFR 195.2, carbon dioxide is ''a fluid consisting of more than 90 percent carbon dioxide molecules compressed to a supercritical state,'' which would include supercritical CO_2 streams transported for purposes of CCS. The requirements in 49 CFR part 195 govern pipeline design, construction, operation and maintenance, and emergency response planning, and EPA believes that by addressing these areas, the PHMSA requirements are consistent with the RCRA subtitle C goal of preventing releases in order to protect human health and the environment.

Additionally, PHMSA's goal is to improve the overall integrity of pipeline systems and reduce risks. See January 10, 2011 **Federal Register** (76 FR 1504). To evaluate risk adequately, the Hazardous Liquid and Gas Transmission Pipeline Integrity Management (IM) requirements were created (49 CFR 195.450 and § 195.452), which supplement PHMSA's safety regulations mentioned above. The goal of the IM requirements is to identify and evaluate the physical and operational characteristics of each individual pipeline system, in order to ensure the quality of pipeline integrity in areas with a higher potential for adverse consequences (high consequence areas or HCAs).[40] In addition, PHMSA's IM

[35] ''Substantive'' as used here describes those requirements that are directly related to storage, transportation, treatment, or disposal, and not notification or biennial reporting.

[36] EPA notes that there are no stand-alone RCRA hazardous waste standards for pipelines only; rather, EPA regulates hazardous waste ''tank systems'' which includes technical standards for piping where that piping is ancillary to hazardous waste tanks. See 40 CFR 260.10 for the definition of tank system; see also July 14, 1986 **Federal Register** for discussion of ancillary equipment, 51 FR at 25441.

[37] CRS Report for Congress. Carbon Dioxide (CO_2) Pipelines for Carbon Sequestration: Emerging Policy Issues. Paul W. Parfomak and Peter Folger. January 17, 2008.

[38] CRS Report for Congress. Regulation of Carbon Dioxide (CO_2) Sequestration Pipelines: Jurisdictional Issues. Adam Vann and Paul W. Parfomak. April 15, 2008.

[39] The pipeline transportation of carbon dioxide and hazardous liquids are both regulated under the same regulatory framework. ''Hazardous liquids,'' for purposes of 49 CFR part 195, are defined by DOT as petroleum, petroleum products, and anhydrous ammonia, and are not the subject of this proposed rule. 49 CFR 195.2.

[40] HCAs include populated areas, and other areas particularly vulnerable to pipeline releases, such as

requirements promote a more rigorous and systematic management of pipeline integrity and risk by operators; maintain the government's prominent role in the oversight of pipeline operator integrity plans and programs; and increase the public's confidence in the safe operation of the nation's pipeline network. EPA believes that these requirements, which focus on preventing releases that might affect human populations and ecologically-sensitive areas, further support the conclusion in today's proposal that additional regulation of pipeline transportation under RCRA subtitle C is not necessary in order to protect human health and the environment.

With respect to there being no requirement to use a hazardous waste manifest under today's proposal for CO_2 streams that are conditionally excluded, it is important to note that under the RCRA subtitle C regulations, moving hazardous waste off-site through a pipeline does not trigger the use of a manifest, because pipelines are not included in the definition of ''transportation'' under RCRA subtitle C.[41] With respect to the use of a manifest, because the applicable requirements would not change under either the existing RCRA subtitle C regulations, or when managed in accordance with today's proposed conditional exclusion, there is no change in protection to human health and the environment under today's proposed rule. In fact, EPA notes that were CO_2 streams to be subject to RCRA subtitle C as hazardous waste, they would not be regulated any differently under the part 195 regulations that are applicable to supercritical CO_2 streams. Consultations with PHMSA staff indicate that whether a CO_2 stream is defined as hazardous waste under RCRA subtitle C (in this instance, if it were to exhibit a RCRA characteristic) does not change the technical and other requirements applicable to the transportation of supercritical CO_2 under PHMSA.[42]

Finally, EPA notes that it may be the case that some pipelines used to transport CO_2 are not subject to the DOT requirements, because they are located on-site at the generator facility or at the UIC Class VI facility. See, *e.g.,* 49 CFR 195.1(b)(8). EPA requests information on how these pipelines are currently regulated, including any design and operating standards that apply to such pipelines. As discussed earlier in today's preamble, EPA assumes that in the typical case, captured CO_2 will not be stored at the generator facility, and will be transferred in a continuous manner either to an on-site or off-site UIC Class VI well. EPA is not proposing to apply RCRA subtitle C requirements to these pipelines as a condition of today's proposed rule (as stated earlier, absent storage of hazardous waste by generators, piping alone would not be subject to subtitle C regulation in any event); but EPA still requests comment on the appropriateness of applying the RCRA subtitle C standards to these non-DOT regulated pipelines.

Non-Pipeline Transport—While EPA expects that pipelines will be the most commonly used transportation method for moving supercritical CO_2 from its source to a UIC Class VI injection well, other forms of transportation other than pipeline (*e.g.,* highway, rail) are still possible. Supercritical CO_2 streams being transported by means other than by pipeline must comply with applicable DOT hazardous materials transportation regulations, which address (for these modes of transportation) requirements, such as packaging, labeling, marking, placarding, emergency response, training, and shipping documentation. These regulations are found in 49 CFR parts 100–180 (hazardous materials regulations). EPA believes that these DOT requirements will adequately address risks to human health and the environment from the transportation of CO_2 and, therefore, additional RCRA subtitle C requirements specifically relating to transportation will not provide substantially more protection.

Where a hazardous waste manifest would otherwise be required for transporting CO_2 streams that meet the definition of hazardous waste, under today's proposed conditional exclusion, no hazardous waste manifest would be required. While the DOT hazardous materials shipping paper ensures that important information regarding the CO_2 stream accompanies the shipment, and that persons offering the CO_2 stream for transport must keep copies of the DOT shipping paper for two years, there is no tracking feature provided by the DOT shipping paper (as is the case for a hazardous waste manifest). EPA believes, however, that today's proposed rule will provide adequate incentive to ensure that the CO_2 stream is delivered to a UIC Class VI facility (for example, as discussed later in today's preamble, EPA is proposing a condition requiring generators to certify that any CO_2 stream, which they claim to be excluded from RCRA subtitle C, has been delivered to a UIC Class VI facility). EPA believes that this proposed certification statement, which must be signed by the generator, provides a strong incentive to ensure delivery to the designated UIC Class VI facility; this is because generators who claim the exclusion, but fail to ensure delivery of their CO_2 stream that is hazardous to a Class VI facility, risk losing the exclusion and invoking the full hazardous waste requirements. Nonetheless, EPA notes that this certification statement does not provide the same type of tracking as a hazardous waste manifest would provide. Therefore, EPA requests comment on the extent to which non-pipeline transportation will be used specifically for transporting CO_2 streams to UIC Class VI facilities, and whether the use of the certification statement, together with compliance with applicable DOT hazardous material transportation requirements, are effective substitutes for the RCRA hazardous waste regulations that would apply to these specific circumstances.

C. Underground Injection of CO_2 Streams at UIC Class VI Wells

The UIC Class VI regulations specifically preclude CO_2 streams that are defined as RCRA hazardous waste from being injected into a UIC Class VI well. See 40 CFR 146.81(d) (definition of Carbon Dioxide Stream in the UIC Class VI regulation). Instead, under the existing UIC and RCRA regulations, hazardous wastes (including CO_2 streams that meet the definition of hazardous waste)—if injected—must be injected into a Class I hazardous waste well. As already discussed, EPA has little information about whether CO_2 streams would exhibit a RCRA hazardous waste characteristic (in particular, the TC). However, because it is possible that captured CO_2 streams could contain low concentrations of contaminants which could cause a waste to be identified as hazardous by the TC (*e.g.,* arsenic, mercury, selenium),[43] EPA considered whether the injection of captured CO_2 streams into UIC Class VI wells would be properly managed, such that subtitle C regulation was duplicative and unnecessary.

drinking water resources or certain ecologically-sensitive areas. 49 CFR 195.450.

[41] 40 CFR 260.10, 262.20(a)(1), and 263.20(a)(1). See also Memorandum from Marcia Williams, Director, Office of Solid Waste, to Barry [sic] Seraydarian, Director, Toxics and Waste Management Division, EPA Region 9, April 30, 1986.

[42] Memorandum to Docket EPA–HQ–RCRA–2010–0695, Personal Communication with Vince Holohan, PHMSA, U.S. DOT.

[43] Apps, J.A., *A Review of Hazardous Chemical Species Associate with* CO_2 Capture from Coal-Fired Power Plants and Their Potential Fate in CO_2 Geologic Storage, Lawrence Berkeley National Laboratory, March 2006.

The UIC Class VI requirements are designed to ensure that the CO_2 and any incidental associated substances will be isolated within the injection zone, and thus protect USDWs from endangerment. The UIC Class VI requirements are designed for the unique characteristics of CO_2, including its buoyancy relative to other fluids in the subsurface, which requirements account for the potential presence of impurities (including hazardous contaminants which could cause the waste to be identified as hazardous by the TC) in captured CO_2. See 75 FR at 77234–5 (December 10, 2010). Thus, EPA expects that compliance with the UIC Class VI requirements, which are designed to ensure isolation of supercritical CO_2 streams, will also address the potential for effects on human health and the environment from the contaminants present in the stream. Below is a description of key elements of the UIC Class VI requirements that EPA believes will ensure protection of human health and the environment, such that RCRA subtitle C regulation would be duplicative and unnecessary.

1. Development of UIC Class VI Wells Under SDWA

Section 1421(d)(2) of the SDWA provides, ''Underground injection endangers drinking water sources if such injection may result in the presence in underground water which supplies or can reasonably be expected to supply any public water system of any contaminant, and if the presence of such contaminant may result in such system's not complying with any national primary drinking water regulation or may otherwise adversely affect the health of persons.'' Pursuant to § 1421(d)(2), the UIC program requirements for all well classes, promulgated under the authority of the SDWA, are designed to comprehensively ensure that an injection well is appropriately sited, operated, tested, monitored, and closed in a manner that ensures USDW protection and does not otherwise adversely affect the health of persons.[44]

In developing standards for CO_2 injection for GS, the Agency evaluated the applicability of the existing UIC program requirements for Class I wells (hazardous and non-hazardous) through Class V wells, and determined that new, tailored regulations to address the injection of supercritical CO_2 streams for GS, including any associated constituents that may be present in the CO_2 streams, were warranted in order to protect USDWs from endangerment. In October 2007, EPA announced that it would develop tailored regulations for GS, by adapting the existing UIC program framework and by relying on that program's experience—over 25 years—in regulating the injection of fluids, including CO_2 injected for enhanced hydrocarbon recovery. The Class VI rule, finalized in December 2010, includes specific requirements designed to address the unique nature of CO_2 injection for GS, including the large CO_2 injection volumes anticipated at GS projects, the relative buoyancy of CO_2, its mobility within subsurface geologic formations, and its corrosivity in the presence of water. In addition, EPA recognized that the CO_2 stream could contain impurities, including those which could cause the waste to exhibit the TC under the RCRA subtitle C regulations.

Throughout the regulatory development process for the Class VI requirements, the UIC program, in coordination with other EPA program offices, stakeholders, and the public relied upon the existing UIC regulatory framework and applicable requirements of other well classes (*i.e.,* Class II, Class I industrial, Class I hazardous), as appropriate. However, the Agency recognized that these established programmatic requirements required certain modifications and enhancements with respect to CO_2 injection for GS in order to ensure USDW protection.

2. Key Elements of the UIC Class VI Well Requirements

The UIC Class VI final regulations include specific requirements tailored to the particular nature of CO_2 injection for GS. These program elements include site characterization, area of review (AoR) delineation, corrective action,[45] well construction and operation, testing and monitoring, post-injection site care, site closure, and financial responsibility. Together, these program elements provide a comprehensive approach for verifiable isolation of the CO_2 stream within the injection zone to ensure protection of USDWs from endangerment. Although not an exhaustive list, some requirements tailored for GS (Class VI) include:

○ Class VI well owners or operators must conduct and submit, with the permit application, an extensive, detailed assessment of the geologic, hydrogeologic, geochemical, and geomechanical properties of the proposed GS site to ensure that GS wells are located in suitable geologic formations, and that the geology provides containment. The owner or operator must also select a site with an injection zone of sufficient areal extent, thickness, porosity and permeability to receive the total anticipated volume of the CO_2 stream, and, confining zones free of transmissive faults or fractures and of sufficient areal extent and integrity to contain the injected CO_2 stream and displaced formation fluids. Class VI requirements also mandate a thorough process for the identification of features that might compromise the integrity of the containment system (*e.g.,* abandoned wells) and remediation of those features through corrective action, within the AoR. Existing UIC regulations, including those for Class I hazardous wells, require that owners or operators define the AoR, within which they must identify artificial penetrations and determine whether they have been properly constructed or plugged; the Class VI regulations are consistent with this approach.

○ Class VI well owners or operators must delineate the AoR using a sophisticated computational model that incorporates available site characterization data and planned operational conditions. Throughout the life of the project, the AoR must be periodically reevaluated (at least once every 5 years) through the use of monitoring and operational data to verify that the CO_2 plume and the associated area of elevated pressure are moving as predicted within the subsurface, and that the injected CO_2 stream is isolated within the injection zone. With the exception of the UIC Class VI regulations, the existing UIC regulations (including Class I hazardous) do not include a requirement to reevaluate the AoR and

[44] For example, the following general standard in the SDWA regulations applies to all classes of UIC wells: ''No owner or operator shall construct, operate, maintain, convert, plug, abandon, or conduct any other injection activity in a manner that allows the movement of fluid containing any contaminant into underground sources of drinking water, if the presence of that contaminant may cause a violation of any primary drinking water regulation under 40 CFR part 142 or may otherwise adversely affect the health of persons. The applicant for a permit shall have the burden of showing that the requirements of this paragraph are met.'' 40 CFR 144.12(a).

[45] EPA notes that the term ''corrective action'' is used in both the SDWA and RCRA programs, but refers to different activities under each. Under the UIC Class VI rule, the phrase refers to actions taken to correct situations where artificial penetrations (*e.g.,* wells) could serve as unwanted conduits for CO_2 or other fluid movement into or between USDW within the AoR. See 40 CFR 144.55, 146.7, and 146.64. Under RCRA subtitle C, corrective action generally refers to actions taken to address releases of hazardous wastes or hazardous constituents from solid waste management units at a treatment, storage, or disposal facility. The RCRA corrective action aspects of this proposed rule are discussed in Section IV.C.4 of this preamble.

corrective action plan. This reevaluation is an additional level of protection that has been added for Class VI wells in order to address the unique characteristics of the CO_2 stream injectate. This reevaluation will provide an ongoing dialogue between the Director and the owners or operators, while ensuring that if a circumstance changes, the AoR will be updated to address those changes, while ensuring protection of USDW. Because there will be inevitable plume movement, a reevaluation was deemed to be necessary to protect USDW for Class VI wells.

○ Class VI well owners or operators must also identify and evaluate all artificial penetrations within the AoR, and based on this review, identify the wells that need corrective action to prevent the movement of CO_2 or other fluids into or between USDWs. Owners or operators must perform corrective action to address deficiencies in any wells (regardless of ownership) that are identified as potential conduits for fluid movement into USDWs. The Director must approve the methods used to identify the wells and the corrective action selected by the owners or operators. This inventory and review process is similar to what is required of all Class I and Class II injection well owners or operators.

○ Class VI wells must meet the same stringent injection well construction standards as Class I hazardous waste wells, in order to ensure that the well itself does not serve as a conduit for fluid movement. In addition, the Class VI rule requires that all well construction materials be compatible with the fluids with which the materials may come in contact (*e.g.,* fluid formations; CO_2 streams) over the life of the GS project. Class VI operating requirements also ensure that injection in a Class VI well will not propagate fractures within the injection and/or confining zones that could compromise containment.

○ Class VI owners or operators must conduct robust monitoring to ensure the integrity of the injection well, detect any changes in groundwater geochemistry that may indicate leakage, and track the evolution of the CO_2 stream and associated pressure front. Class VI monitoring requirements are generally more detailed and rigorous than those for Class I hazardous waste injection wells, and are designed to verify isolation of the injected CO_2 stream, and allow for early-warning of any possible fluid leakage.

○ The Class VI rule contains tailored requirements for extended, comprehensive post-injection monitoring and site care of GS projects following cessation of injection, until it can be demonstrated that movement of the CO_2 plume and pressure will not pose a risk of endangerment to USDWs. Owners or operators must also plug injection and monitoring wells in a manner that protects USDWs. Proper plugging of injection and monitoring wells is a long-standing requirement in the UIC Program to ensure that existing wells do not serve as conduits for fluid movement following cessation of injection and site closure. Post-injection site care (PISC), which is unique to GS and Class I hazardous wells in the UIC program, is a protective measure that requires site monitoring to continue in order to ensure the injectate and any mobilized fluids do not pose a risk to USDW.

○ Class VI provisions require that owners or operators maintain financial responsibility obligations guaranteeing that funds will be available for all SDWA corrective action, injection well plugging, PISC, site closure, and emergency and remedial response.

These elements of the Class VI requirements are designed to provide verifiable control of the CO_2 stream at the Class VI well, and containment of that stream within the injection zone, in order to ensure protection of USDW from endangerment. EPA believes that the elimination of exposure routes through these requirements will ensure protection of human health and the environment, and views this as determinative in its evaluation of whether the RCRA subtitle C regulatory requirements for hazardous waste disposal provide any substantial, additional protection for CO_2 streams which exhibit a characteristic of hazardous waste and are disposed in UIC Class VI wells. Thus, EPA concludes (subject to consideration of public comment) that a conditional exclusion from RCRA subtitle C requirements is warranted for CO_2 streams that are injected into UIC Class VI wells for purposes of GS.

3. RCRA Land Disposal Restrictions

Under today's proposed rule, a CO_2 stream that is conditionally excluded from the definition of hazardous waste would not be subject to the RCRA land disposal restriction (LDR) requirements in 40 CFR part 148 that apply to restricted hazardous wastes that are disposed of in UIC wells. EPA considered how the conditions proposed in today's rule compare to the protections afforded by the RCRA LDR requirements (that would otherwise apply to a CO_2 stream that exhibits a RCRA characteristic and is disposed of in an injection well). As discussed below, EPA believes that with respect to CO_2 streams that are conditionally excluded for purposes of GS, the LDR requirements would not provide more protection to human health and the environment than the UIC Class VI requirements provide.

The LDR program ensures that hazardous waste cannot be placed on or under the land—*i.e.,* land disposed—until the waste meets specific treatment standards to reduce the mobility or toxicity of the hazardous constituents in the waste. These treatment standards are waste-code specific, and either specify an allowable concentration of hazardous constituents or specify a method of treatment. These treatment standards must be satisfied before land disposal of the waste occurs. The alternative to meeting the treatment standards is to make a successful demonstration to EPA that no hazardous constituents will migrate from the disposal unit (or, in the case of injection wells, the ''injection zone'' (see RCRA section 3004(d)(1)) for as long as the waste remains hazardous (a ''no-migration'' petition). See RCRA sections 3004(f) and (m). The LDR requirements are found in 40 CFR part 268, and the LDR requirements regarding injection wells are located in 40 CFR part 148.

LDR requirements attach to wastes that are hazardous at the point of generation. *Chemical Waste Management* v. *EPA,* 976 F. 2d 2, 13,14 (D.C. Cir. 1992), so that if a waste is conditionally excluded from being a hazardous waste, LDRs do not apply. EPA evaluated the protections afforded under the Class VI regulations and the LDR program to assure that this is an appropriate outcome here.

Class VI wells are required to demonstrate (through the initial permitting process, and periodically during the operational life of the well), on a well-by-well basis, that there are no features near an injection well that would allow injected fluid to move into a USDW or displace native fluids into USDWs resulting in their endangerment. EPA interprets the UIC Class VI isolation requirements as meeting the objectives of the RCRA LDR requirements. This is because the same individualized determination, using the same or similar decision tools, with essentially the same ultimate determination (no migration of hazardous constituents from the injection zone of either a Class VI well or a Class I hazardous waste well) would apply in either instance.

EPA thus believes (subject to consideration of public comment) that the Class VI well review process and

isolation requirements will meet essentially the same requirements and objectives as the RCRA no-migration process, affords similar procedural safeguards (individualized determinations in both instances), and will protect human health and the environment via proper management under the Class VI regulations. Thus, the proposed conditional exclusion appears reasonable with respect to otherwise-applicable LDR requirements.

In addition, we note that RCRA section 1006(b) provides that EPA ''shall integrate all provisions of this chapter for purposes of administration and enforcement and shall avoid duplication, to the maximum extent practicable, with the appropriate provisions of the * * * Safe Drinking Water Act.'' For the reasons just discussed, it appears that the RCRA LDR provisions duplicate the requirements and procedures of the Class VI rules and that a conditional exclusion from being a hazardous waste avoids this duplication. See *Chemical Waste Management* v. *EPA,* 976 F. 2d 2, 23–24 (integration of RCRA LDR and Clean Water Act direct discharger requirements).

4. Subtitle C Corrective Action

EPA also reviewed the subtitle C corrective action requirements, which apply to any hazardous waste treatment, storage or disposal facility, including Class I UIC hazardous waste facilities. Under today's proposed conditional exclusion, CO_2 streams that would otherwise be defined as RCRA hazardous waste (because they exhibit a RCRA characteristic) and meet the proposed conditions, would not be defined as hazardous waste. Therefore, the RCRA corrective action requirements would not be triggered at the UIC Class VI facility as a result of the management of conditionally-excluded CO_2 streams. EPA does not believe, however, that the absence of RCRA corrective action authority at a Class VI UIC facility is of concern with respect to the management of excluded CO_2 streams in the Class VI UIC well under a SDWA permit. In EPA's view, the comprehensive Class VI UIC regulations provide multiple, enforceable mechanisms to correct permit violations and other situations that may pose a risk to USDW. These include enforceable requirements to develop, maintain, and update an emergency and remedial response plan, and to undertake emergency or remedial response actions for any unauthorized releases from the well or injection zone. See 40 CFR 146.94.

5. Conclusion

In conclusion, consistent with the SDWA and RCRA, the integrated application, implementation, and enforcement of the UIC Class VI requirements will protect human health and the environment by ensuring that the CO_2 streams (which may include low concentrations of hazardous constituents as discussed above) remain isolated in the injection zone and confined by confining zones in an appropriate, well-characterized geologic setting, that is continuously monitored to ensure that the CO_2 streams remain in the injection zone. EPA believes that with respect to CO_2 streams as discussed in today's proposed conditional exclusion, the existing UIC Class VI requirements sufficiently address any potential risk to human health and the environment, such that subtitle C regulation is unwarranted.

D. Prohibition on Introduction of Other RCRA Hazardous Wastes

The UIC Class VI well program was specifically developed for the unique purpose of GS of CO_2 streams. Today's proposed conditional exclusion only applies to CO_2 streams that have been captured for purposes of GS and are to be injected into a UIC Class VI well. EPA is proposing to limit the scope of this exclusion by including a condition that no other hazardous waste can be mixed with, or otherwise co-injected with, the CO_2 streams as defined in today's proposed rule. Thus, if hazardous waste is mixed with the CO_2 stream, under today's proposal that stream would not be eligible for the conditional exclusion. That stream would need to be managed as a RCRA hazardous waste, and, if well injection is selected as the means of disposal, injected into a UIC Class I hazardous well.

EPA expects that where facilities have made the significant economic commitment to capture and/or inject CO_2 streams for purposes of GS, such facilities will not wish to jeopardize this arrangement by mixing hazardous waste into the CO_2 stream in violation of the explicit prohibition in the UIC Class VI rule, as well as the condition being proposed today in 40 CFR 261.4(h)(1)(iii). EPA seeks to safeguard the efforts of the CO_2 sources and injection facilities that comply with the mixing prohibition by designing a regulatory scheme that is enforceable and is structured to ensure compliance, thus obtaining the full benefit of the regulation that the public expects.

In order to better ensure that CO_2 sources and UIC Class VI injection facilities choosing to use this conditional exclusion fully comply with the conditions of the exclusion, including the prohibition on mixing hazardous waste with the CO_2 stream, EPA is proposing that a certification statement be executed by an authorized representative of the generator and the Class VI injection facility owner/operator. The term ''authorized representative'' is defined in the RCRA regulations to mean ''the person responsible for the overall operation of a facility or an operational unit (*i.e.,* part of a facility), *e.g.,* the plant manager, superintendent or person of equivalent responsibility.'' 40 CFR 260.10.

Because the function of the certification statement is to ensure compliance with the conditions of the proposed conditional exclusion, EPA requests comment on whether it should limit the categories of employees who would be required to sign this certification statement, to senior employees in the same manner as that which is required for RCRA permit applications under 40 CFR 270.11(a). Under this alternative approach, certification statements (for corporations) would need to be signed by a ''responsible corporate officer'' as defined in § 270.11(a)(1)(i), or, plant managers for facilities over a certain size as defined in § 270.11(a)(1)(ii); by a general partner or proprietor (for general partnerships or sole proprietorships, respectively) as specified in § 270.11(a)(2); or, for public agencies, the chief executive officer, or certain other senior officers of that agency, as defined in § 270.11(a)(3). Accountability and enforceability may be improved when signatories to these types of certifications are at the highest levels of an organization.

EPA is not requiring that these certifications be submitted to the Agency; rather, EPA is proposing that the signed certification statement be kept on-site for no less than three years, and that these signed certifications be made available within 72 hours of a written request from the Regional Administrator (or state Director, if located in a state implementing the conditional exclusion as part of their authorized RCRA program).[46] EPA believes the retention time of three years is reasonable and appropriate, and consistent with the existing subtitle C recordkeeping requirements (*e.g.,* 40 CFR 262.40 and 268.7(a)(8) for

[46] ''Regional Administrator'' as defined under RCRA subtitle C (40 CFR 260.10) includes any designee of the Regional Administrator; therefore, written requests may be made by a designee of the Regional Administrator or state Director. Today's proposed regulatory text reflects this.

generators; 264.73 for TSDFs). Because EPA is not requiring the submittal of signed certification statements, today's proposed rule does not impose any new reporting requirements; however, EPA will be aware of the universe of generator and UIC Class VI facilities that may potentially claim this proposed conditional exclusion, because under the existing regulatory framework for GS, facilities that capture and sequester CO_2 must identify themselves, and report specific information regarding their CO_2 capture and GS activity, to the Agency.[47] Therefore, EPA believes that it will have adequate opportunity to determine whether any particular facility is claiming the exclusion, as it anticipates a relatively gradual increase in the deployment of CCS activities in the near term. EPA is also proposing that these certifications shall be renewed every year that the generator or UIC Class VI well owner/operator claims the RCRA conditional exclusion, in order to ensure that the certification is kept current (*e.g.,* facility personnel may change, etc.). This yearly renewal of the certification statement means that an authorized representative must annually prepare and sign a new copy of the certification statement, to be retained on-site for no less than three years.

The language for this certification is in proposed 40 CFR 261.4(h)(1)(iv), and reads as follows:

> I certify under penalty of law that the carbon dioxide stream that I am claiming to be excluded under 40 CFR 261.4(h)(1) meets all of the conditions set forth in that paragraph.''

While EPA is not currently aware of specific examples where hazardous wastes are being mixed into or with CO_2 streams, particularly at this early stage of CCS deployment, well-designed rules are essential to the success of future enforcement efforts. EPA requests comment on the certification statement, and particularly seeks comment on whether this measure will appropriately ensure compliance with the conditional exclusion, including the mixing prohibition. EPA also requests comment on how CO_2 sources, who add excluded CO_2 streams into an existing (or future) CO_2 pipeline network, can ensure that the CO_2 reaches a UIC Class VI facility. Finally, EPA requests comment on whether transporters, as well as pipeline owners and operators, should also sign such a certification statement.

In addition to the conditions and requirements being proposed today, the Agency recognizes that other conditions or requirements could possibly improve EPA's and the states' ability to monitor compliance with the mixing prohibition. For example, there are certain existing requirements for the physical and chemical characterization of CO_2 streams that apply at the UIC Class VI facility (discussed in Section III.E. of this preamble), and the prohibition that no hazardous waste be injected in the UIC Class VI well. However, there are no CO_2 stream characterization requirements that EPA could identify upstream of the UIC Class VI well, such as at the CO_2 source or in a pipeline, other than the general requirement that generators make a hazardous waste determination for any solid waste they generate (40 CFR 262.11), and the PHMSA requirement that supercritical CO_2 streams be chemically compatible with the pipeline and any commodities in the pipeline (49 CFR 195.4), and will not corrode the pipeline and pipeline system (49 CFR 195.579).[48] EPA requests comment, including supporting information, on whether (and if so, what type of) additional monitoring, recordkeeping, and reporting of the CO_2 composition by generators and transporters (including pipeline operators), might aid EPA and the states in their ability to detect improper mixing of hazardous waste with CO_2 streams. EPA also requests comment on whether there are other conditions, such as a minimum CO_2 content, that could enhance compliance with the proposed ''no mixture'' condition. For example, EPA is aware that under the PHMSA requirements for the pipeline transportation of supercritical carbon dioxide, the definition of carbon dioxide specifies a CO_2 content of greater than ninety percent. 49 CFR 195.2. EPA also requests comment on what commercial, operational, or regulatory requirements or specifications already exist regarding CO_2 content in the management of supercritical CO_2.

EPA notes that it is requesting comment on whether persons engaged in the movement of conditionally-excluded CO_2 streams, including transporters, as well as pipeline owners or operators, should certify that they meet the conditions of today's proposed conditional exclusion. EPA is also requesting comment on whether any new monitoring, recordkeeping or reporting requirements are necessary (including as those might apply to pipeline owners or operators) to ensure that the conditions of the proposed exclusion are met. EPA emphasizes that aside from seeking comment in these two areas, EPA is not proposing any new requirements applicable to pipelines or pipeline owner/operators.

EPA understands that much of the existing U.S. pipeline infrastructure is used to transport materials that are not RCRA solid wastes. EPA also appreciates that because of this, the potential application of subtitle C jurisdiction may raise questions over whether EPA is proposing to extend its existing RCRA jurisdiction in today's proposed rule. EPA wishes to clarify that this is not the case, as EPA generally already has RCRA jurisdiction over solid and hazardous waste. While pipelines are not included in the definition of ''transportation'' under the RCRA subtitle C regulations (40 CFR 260.10), EPA retains RCRA subtitle C jurisdiction over solid and hazardous wastes generally, including when these materials are in pipelines. At the same time, however, EPA again notes that, provided the conditions proposed today are met (when final), persons engaged in transportation or pipeline delivery of conditionally-excluded CO_2 streams are not managing a RCRA hazardous waste.

E. Loss of the Conditional Exclusion

The conditional exclusion being proposed today does not preclude regulation or enforcement by EPA or the states against generators, transporters, or treatment, storage, or disposal facilities who are not eligible for the conditional exclusion, or who do not meet the conditions of the exclusion. Because this hazardous waste exclusion is conditional, a claimant must meet the conditions to qualify for and maintain the exclusion from the hazardous waste regulations. Failure to meet the conditions results in the loss of the exclusion. As proposed, a violation of a condition at any point in the management of a CO_2 stream would result in that CO_2 stream being subject to all applicable subtitle C regulatory requirements, from the point of generation. Thus, a violation of a condition at a UIC Class VI facility, for example, would mean that in addition to the UIC Class VI facility, the generator and transporter would also be considered to be managing (or to have

[47] Under subparts PP and RR of the GHG reporting program, facilities that capture CO_2 and facilities that inject CO_2 underground for GS (including UIC Class VI facilities) have certain reporting requirements. For more information, see Section III of this preamble.

[48] The Agency is also aware that supercritical CO_2 pipeline owner/operators follow certain requirements and specifications related to monitoring supercritical CO_2 composition, including water content, and the identification of any impurities or other inert materials, that might negatively affect CO_2 transport, or otherwise take up needed space. Pers. comm., Doug McMurrey, V.P. for Marketing and Business Development, Kinder Morgan, 7–21–2010.

managed) a hazardous waste. Moreover, imminent and substantial endangerment provisions under § 7003 of RCRA will continue to apply to conditionally-excluded CO_2 streams as a safeguard in the unlikely event of a release which could pose a health or environmental threat. This is true even if the CO_2 stream does not otherwise meet the regulatory definition of hazardous waste.[49]

F. Adaptive Approach

EPA is using an adaptive approach in the UIC Class VI final rule to allow it to consider making changes to the UIC Class VI program to incorporate new research, data, and information about GS and associated technologies. In the UIC Class VI final rule, EPA stated that the Agency plans, every six years, to review the rulemaking and data on GS projects to determine whether the appropriate amount and types of information and appropriate documentation are being collected, and to determine if modifications to the UIC Class VI requirements are appropriate or necessary. See December 10, 2010 **Federal Register** (75 FR at 77240–41, 77243, and 77257). This new information may increase protectiveness, streamline implementation, or otherwise inform the requirements for GS injection of CO_2.

Consistent with EPA's stated intent in the UIC Class VI rule, EPA also plans to evaluate any new information related to the conditional exclusion being proposed today at the same time as is planned for the UIC Class VI rule. EPA intends to use the information gathered by the UIC Class VI program described above, as well as additional information, such as data on the chemical and physical characteristics of the CO_2 streams being injected, to inform its consideration of whether changes should be made to the conditional exclusion (such changes could require additional rulemaking). Thus, the Agency commits to reviewing, in coordination with the adaptive approach planned for the UIC Class VI rule, new research, data, and information related to today's proposed conditional exclusion (if finalized), particularly with respect to compliance with the conditions of the exclusion, and the nature and composition of the CO_2 stream.

G. Definition of Carbon Dioxide Stream

Today, EPA is also proposing to add a definition for the term *carbon dioxide (CO_2) stream* to the hazardous waste regulations in 40 CFR 260.10. Under today's proposed rule, *carbon dioxide (CO_2) stream* is defined as ''carbon dioxide that has been captured from an emission source (*e.g.,* a power plant), plus incidental associated substances derived from the source materials and the capture process, and any substances added to the stream to enable or improve the injection process.'' The same definition is used in the UIC Class VI regulations in 40 CFR 146.81(d), with one exception. The definition in § 146.81(d) includes additional language that reads, ''This subpart does not apply to any carbon dioxide stream that meets the definition of a hazardous waste under 40 CFR part 261,'' thus, prohibiting the injection of hazardous waste into UIC Class VI wells. Because today's conditional exclusion would apply to CO_2 streams that are otherwise RCRA hazardous wastes, EPA did not include similar language in today's proposed definition of carbon dioxide stream. EPA intends for the two definitions to work in concert, however, such that it is clear that both RCRA hazardous CO_2 streams (that are excluded when managed pursuant to the terms of today's proposed conditional exclusion) and non-hazardous CO_2 streams may be injected into a UIC Class VI well. Finally, EPA notes that in today's proposed definition, ''substances added to the stream to enable or improve the injection process'' refers to non-waste substances that serve the legitimate purpose as stated (*i.e.,* to enable or improve the injection process), and does not include listed or characteristic hazardous wastes. EPA requests comment on the types and characteristics of substances that are added to CO_2 streams to enable or improve the injection process.

V. State Authorization

A. Applicability of the Rule in Authorized States

Under Section 3006 of RCRA, EPA may authorize qualified states to administer their own hazardous waste programs in lieu of the Federal program within the state. Following authorization, EPA retains enforcement authority under Sections 3008, 3013, and 7003 of RCRA, although authorized states have primary enforcement responsibility. The standards and requirements for state authorization are found at 40 CFR part 271.

Prior to enactment of the Hazardous and Solid Waste Amendments of 1984 (HSWA), a state with final RCRA authorization administered its hazardous waste program entirely in lieu of EPA administering the Federal program in that state. The Federal requirements no longer applied in the authorized state, and EPA could not issue permits for any facilities in that state, since only the state was authorized to issue RCRA permits. When new, more stringent Federal requirements were promulgated, the state was obligated to enact equivalent authorities within specified time frames. However, the new Federal requirements did not take effect in an authorized state until the state adopted the Federal requirements as state law.

In contrast, under RCRA Section 3006(g) (42 U.S.C. 6926(g)), which was added by HSWA, new requirements and prohibitions imposed under HSWA authority take effect in authorized states at the same time that they take effect in unauthorized states. EPA is directed by the statute to implement these requirements and prohibitions in authorized states, including the issuance of permits, until the state is granted authorization to do so. While states must still adopt HSWA related provisions as state law to retain final authorization, EPA implements the HSWA provisions in authorized states until the states do so.

Authorized states are required to modify their programs only when EPA enacts Federal requirements that are more stringent or broader in scope than existing Federal requirements. RCRA Section 3009 allows the states to impose standards more stringent than those in the Federal program (see also 40 CFR 271.1). Therefore, authorized states may, but are not required to, adopt Federal regulations that are considered less stringent than previous Federal regulations.

B. Effect on State Authorization

The provisions in today's notice are proposed pursuant to non-HSWA authority, and would eliminate the hazardous waste requirements for those CO_2 streams that would otherwise meet the definition of hazardous waste, when these streams are managed in accordance with certain conditions. Therefore, this proposed exclusion is less stringent than the Federal program, and states are not required to adopt this

[49] EPA also notes that existing obligations to address corrective action at RCRA treatment, storage, and disposal facilities would not be affected by this proposed rule. In addition, today's proposed conditional exemption would not preclude RCRA corrective action requirements from applying to a Class VI UIC facility if the facility were to engage in the management of hazardous waste that would require a RCRA permit (*e.g.,* if the conditions of today's proposed exemption were not met and the previously exempt CO_2 streams were no longer exempt; or, if other hazardous wastes were treated, stored, or disposed of at the facility).

provision.[50] Nevertheless, while states do not have to adopt this provision, EPA strongly encourages them to do so, because this amendment will substantially reduce the uncertainty associated with defining and managing these CO_2 streams under RCRA subtitle C, which will remove the uncertainty regarding the type of permit needed for the GS of CO_2 streams.

EPA notes that because the conditional exclusion is less stringent than the current RCRA program, states are not required to adopt this rule, if finalized.[51] In situations involving the interstate transportation of conditionally-excluded waste, the exclusion must be authorized in the state where the waste is generated, any states through which the waste passes, and the state where the UIC Class VI injection well is located, in order for that conditionally-excluded waste to be managed as excluded from subtitle C from point of generation to injection in a UIC Class VI well. A state that has not adopted the conditional exclusion may impose state requirements, including the uniform hazardous waste manifest requirement, if characteristically-hazardous CO_2 streams are being transported through that state.[52]

VI. What are the costs and benefits of the proposed rule?

The economic assessment conducted in support of this action evaluated the costs, benefits, small entity impacts, environmental justice, and other impacts (*e.g.,* children's health, unfunded mandates, federalism) of the proposal. As part of the evaluation of potential costs and benefits, EPA first prepared a baseline characterization of the potentially affected universe. We then assessed the ''baseline'' behavior that the affected entities could be expected to display in the absence of the proposed rule. This baseline provided a reference point from which the incremental costs and benefits of the proposed rule were measured. Finally, we estimated how the affected entities would likely change their behavior in response to the rule, as proposed. The analysis estimated incremental costs and benefits of the proposed rule over a 50-year period.[53]

The universe of entities that may be directly affected by the proposed rule include CO_2 generators/capturers, transporters, and sequestration facilities. CO_2 generator facilities are likely to be entities that capture their CO_2 byproducts and manage them in a manner other than releasing them into the atmosphere. Currently, EPA estimates that, at a maximum, there could be up to 27 CO_2 capture facilities affected by the proposed rule. This estimate includes ten facilities that currently capture CO_2, along with 17 facilities expected to begin CO_2 capture in the future. These 27 capture facilities include fossil fuel electric power generators, oil and gas extraction facilities, natural gas distribution facilities, ethyl alcohol manufacturers, and nitrogenous fertilizer manufacturers. Our low-end estimate considers only 13 CO_2 capture facilities. This includes ten existing capture facilities, two capture projects associated with named DOE pilot projects, and one capture facility associated with the FutureGen Federal/private partnership.

EPA expects that captured CO_2 will generally be transported by pipeline. As of 2008, there were 30 operating CO_2 pipelines in the U.S., operated by 29 separate entities. CO_2 sequestration facilities inject the CO_2 streams into UIC wells for the purposes of sequestration. This sequestration may be conducted either with or without concurrent EOR. However, EOR itself is outside the scope of this rule, as proposed.[54] EPA estimates that as many as 29 planned sequestration facilities could be affected by the proposed rule. This estimate includes 15 planned commercial CO_2 sequestration projects and 14 planned projects funded by DOE. The 15 planned commercial projects are expected to include 12 EOR projects that transition to sequestration in the long term and 3 saline reservoir sequestration projects.[55] Our low-end estimate considers only six CO_2 sequestration facilities that will be Class VI UIC wells. This includes five sequestration projects associated with named DOE pilot projects and one sequestration facility associated with the FutureGen Federal/private partnership.

In the baseline (absence of the proposed rule), generators of the captured CO_2 streams would have to determine if their CO_2 stream(s) is (are) a RCRA hazardous waste. Depending upon this determination, a capture facility is most likely to engage in one of four baseline management practices: (1) For CO_2 streams that are determined to be nonhazardous waste, transport the material to a sequestration facility for injection in a Class VI well; for CO_2 streams that are determined to be hazardous waste, either (2) cease capturing the CO_2 stream—that is, continue to allow the CO_2 stream to be emitted into the atmosphere; or (3) transport the CO_2 stream to a sequestration facility for injection in a Class I hazardous well; or (4) treat the CO_2 stream so that it is no longer hazardous and transport it to a sequestration facility for injection in a Class VI well. A generator's determination as to how to manage a RCRA hazardous waste CO_2 stream would depend on several factors. Due to the lack of definitive data on the RCRA hazardous characteristics of CO_2 streams, we applied bounding estimates in our analysis. The high-end assumes that 90% of the CO_2 streams are generated as RCRA hazardous waste, while the low-end assumes that only 10% of the CO_2 streams are RCRA hazardous waste.[56] For all generators that capture CO_2, we further assume the following: each facility would incur costs to determine if the CO_2 stream is a RCRA hazardous waste; facilities that generate a CO_2 stream that is characterized as a non-hazardous RCRA waste would face no further costs associated with the hazardous waste regulations, as would facilities who cease to capture CO_2; facilities that generate RCRA hazardous waste CO_2 streams and do not cease capturing the

[50] EPA notes that decisions regarding whether a state rule is more stringent or broader in scope than the Federal program are made when the Agency authorizes state programs.

[51] Some states incorporate the Federal regulations by reference, or have specific state statutory requirements that their state program can be no more stringent than the Federal regulations. In those cases, EPA anticipates that the conditional exemption proposed today, if finalized, would be adopted by these states, consistent with state laws and administrative procedures (unless explicit action is taken by such a state to decline the revisions, as specified under that state's laws).

[52] As discussed in Section IV.B.2. of this preamble, the off-site movement of hazardous waste through pipelines does not require the use of a hazardous waste manifest under the Federal subtitle C hazardous waste regulations.

[53] This 50-year time period is consistent with the Office of Water Analysis for the Final Geologic Sequestration Rule: Draft Cost Analysis for the Federal Requirements Under the Underground Injection Control Program for Carbon Dioxide Geologic Sequestration Wells (Final GS Rule), EPA 816–R–10–013, July 2010.

[54] EPA notes that today's proposed conditional exclusion only applies to CO_2 streams that are to be injected into UIC Class VI wells; however, other classes of UIC wells that inject CO_2 streams (*e.g.,* Class II wells conducting EOR and Class V experimental wells) can transition to Class VI wells under certain conditions outlined in the final UIC Class VI rule. December 10, 2010 (75 FR at 77243–77249).

[55] Department of Energy, National Energy Technology Laboratory, Carbon Capture and Storage Database, *http://www.netl.doe.gov/technologies/carbon_seq/database/index.html.*

[56] We employ this bounding estimate for analytical purposes only due to the absence of supporting data. This assumption should not be construed as an EPA determination of CO_2 stream status on a nationwide basis. These assumptions were developed solely for this proposed rule, and were not used in, or derived from, the supporting analysis in the UIC Class VI rulemaking.

CO_2 would likely qualify as large quantity generators (LQGs) in the baseline and would be subject to applicable hazardous waste generator requirements; and, CO_2 capture facilities that treat their RCRA hazardous waste CO_2 streams would incur treatment costs, and may also incur RCRA permitting costs.

The baseline universe of CO_2 sequestration facilities is assumed to include a mix of facilities with Class VI wells and facilities with Class I hazardous wells that will meet the Class VI requirements. This analysis assumes that, under the high-end baseline assumption, approximately 57 percent of the sequestration wells would manage non-hazardous CO_2 streams and treated CO_2 streams in Class VI wells.[57] The remaining wells would manage RCRA hazardous CO_2 streams in Class I hazardous wells. For the low-end, our analysis assumes that approximately 97 percent of the sequestration wells would manage non-hazardous CO_2 streams and treated CO_2 streams in Class VI wells. The remaining sequestration wells would manage RCRA hazardous CO_2 streams in Class I hazardous waste wells.

Under the proposed rule, CO_2 streams that are captured, stored, transported, and injected into Class VI UIC wells in accordance with the conditions in the proposed rule would be excluded from the definition of hazardous waste and would therefore not be subject to EPA's RCRA hazardous waste requirements. The exclusion would not apply if the CO_2 stream was mixed or co-injected with any other hazardous wastes.

Our analysis also assumes all affected states will adopt the conditional exclusion and all generators that capture CO_2 will claim the proposed conditional exclusion and send their CO_2 streams to Class VI wells. These facilities would avoid the costs of determining whether their CO_2 stream is RCRA hazardous or non-hazardous, and would also avoid possible RCRA permitting costs and generator requirements. They would only be required to submit an annual certification in accordance with the rule. These generators that capture CO_2 would also be able to send their CO_2 streams to UIC Class VI wells without any additional cost of treating the CO_2 stream. Under the proposed rule, all CO_2 sequestration facilities are assumed to be permitted as UIC Class VI wells, resulting in no need for a UIC Class I hazardous permit for those wells.

The CO_2 stream exclusion, as proposed, would result in three areas of savings for generators of CO_2 streams: exclusion from the hazardous waste determination, exclusion from the need for hazardous waste treatment, and exclusion from compliance with any other hazardous waste-related requirements. CO_2 sequestration facilities managing hazardous CO_2 under a Class I hazardous well permit in the baseline would experience savings related to the hazardous waste determination and compliance with applicable hazardous waste regulations. Requirements and associated costs for pipeline transportation would be unchanged.

Due to the high level of uncertainty regarding the percent of CO_2 that may be generated as RCRA hazardous waste, and the uncertainty regarding the actual number of facilities potentially affected over the projected 50 year period, EPA's best estimate for the impacts of the proposed rule ranges from a low-end annualized net savings of $7.3 million (7% discount rate) to the high-end annualized net savings of $44.9 million (3% discount rate).[58] These cost savings are expected to occur without any discernible increase in negative impacts to human health and the environment. In addition to industry impacts, we project negligible cost increases to EPA and state governments for rule implementation.

VII. Statutory and Executive Order (EO) Reviews

A. Executive Order 12866: Regulatory Planning and Review and Executive Order 13563: Improving Regulation and Regulatory Review

Under Executive Order (EO) 12866 (58 FR 51735, October 4, 1993), this action is a ''significant regulatory action.'' Pursuant to the terms of Executive Order 12866, it has been determined that this rule is a ''significant regulatory action'' because it raises novel legal or policy issues. Accordingly, EPA submitted this action to the Office of Management and Budget (OMB) for review under Executive Orders 12866 and 13563 (76 FR 3821, January 21, 2011) and any changes made in response to OMB recommendations have been documented in the docket for this action. In addition, EPA prepared an analysis of the potential costs and benefits associated with this action. This analysis is presented in the following support document: *Assessment of the Potential Costs, Benefits, and Other Impacts of the Conditional Exclusion From the RCRA Definition of Hazardous Waste for* CO_2 *Streams Managed in UIC Class VI Wells for the Purposes of Geologic Sequestration, as Proposed.* A copy of this document is available in the docket established for this action. The methodology and findings from this analysis are briefly summarized in Section VI above. The reader is encouraged to review and comment on the full assessment document. The final rule will respond to any substantive comments received on the assessment document.

B. Paperwork Reduction Act

The information collection requirements in this proposed rule have been submitted for approval to the Office of Management and Budget under the *Paperwork Reduction Act,* 44 U.S.C. 3501 *et seq.* The Information Collection Request (ICR) document prepared by EPA has been assigned EPA ICR number 2421.01.

The Agency believes that this proposal is an important part of its efforts to establish a regulatory framework for GS.[59]

The certification included in the proposed rule would be required for entities wishing to take advantage of the flexibility provided by the conditional exclusion. The certification statements would be used by regulators to hold generators and UIC Class VI well owner/operators accountable for knowing the conditions applicable to them (*e.g.,* during an on-site inspection). The certification statements also would be used by generators and owner/operators to demonstrate that they are aware of, and complying with, the conditions.

We believe that the certifications are a practical way to assure compliance because they hold a single person at each facility accountable for compliance (*i.e.,* the authorized representative). Because of this, the representative has a personal incentive to make sure that the facility complies with the conditions. The proposed rule requires that the certification be renewed every year that

[57] The reasoning behind this assumption is discussed in the supporting economic assessment document: Assessment of the Potential Costs, Benefits, and Other Impacts of the Conditional Exclusion from the RCRA Definition of Hazardous Waste for CO_2 Streams Managed in UIC Class VI Wells for the Purpose of Geologic Sequestration, as Proposed.

[58] Under the high-end estimate, the proposed rule is expected to result in undiscounted annualized net savings of approximately $56.6 million. Applying a 3 percent discount rate, the annualized net savings were found to be approximately $44.9 million, while a 7 percent discount rate resulted in annualized net savings of approximately $32.0 million. Under the low-end estimate, the undiscounted annualized net savings are $9.3 million. Applying a 3 percent and 7 percent discount rate, the annualized net savings were found to be approximately $8.5 million and $7.3 million, respectively.

[59] See Section III of this preamble for a discussion of other recent EPA rules related to this strategy.

the generator or UIC Class VI well owner/operator claims the RCRA conditional exclusion, in order to ensure that the certification is kept current.

EPA estimates the total annual burden to respondents under the new paperwork requirements to be 79 hours and $6,753. However, EPA also estimates an annual burden savings under the existing RCRA subtitle C paperwork requirements of 303 hours and $25,428. Thus, this would result in a net annual savings of 224 hours and $18,675. The bottom-line burden savings over three years is estimated to be 672 hours and $56,025. There are no capital costs associated with this burden requirement. Burden is defined at 5 CFR 1320.3(b).

An agency may not conduct or sponsor, and a person is not required to respond to, a collection of information unless it displays a currently valid OMB control number. The OMB control numbers for EPA's regulations in 40 CFR are listed in 40 CFR part 9.

To comment on the Agency's need for this information, the accuracy of the provided burden estimates, and any suggested methods for minimizing respondent burden, EPA has established a public docket for this proposed rule, which includes this ICR, under Docket ID number EPA–HQ–RCRA–2010–0695. Submit any comments related to the ICR to EPA and OMB. See **ADDRESSES** section at the beginning of this notice for where to submit comments to EPA. Send comments to OMB at the Office of Information and Regulatory Affairs, Office of Management and Budget, 725 17th Street, NW., Washington, DC 20503, Attention: Desk Officer for EPA. Since OMB is required to make a decision concerning the ICR between 30 and 60 days after August 8, 2011, a comment to OMB is best assured of having its full effect if OMB receives it by September 7, 2011. The final rule will respond to any comments on the information collection requirements contained in this proposal.

C. Regulatory Flexibility Act

The Regulatory Flexibility Act (RFA) generally requires an agency to prepare a regulatory flexibility analysis of any rule subject to notice and comment rulemaking requirements under the Administrative Procedure Act or any other statute unless the agency certifies that the rule will not have a significant economic impact on a substantial number of small entities. Small entities include small businesses, small organizations, and small governmental jurisdictions.

For purposes of assessing the impacts of today's rule on small entities, small entity is defined as: (1) A small business (*based on Small Business Administration (SBA) size standards*), that is primarily engaged in the generation, capture, storage, transportation, and GS of excluded hazardous CO_2 streams, as defined by NAICS codes 211111, 221112, 322121, 324110, 324199, 325120, 325193, 325311, and 327310, with total corporate employment ranging from 500 to 1,500 persons [60] (based on SBA size standards); (2) a small governmental jurisdiction that is a government of a city, county, town, school district or special district with a population of less than 50,000; and (3) a small organization that is any not-for-profit enterprise which is independently owned and operated and is not dominant in its field.

After considering the economic impacts of today's proposed rule on small entities, I certify that this action will not have a significant economic impact on a substantial number of small entities. In determining whether a proposed rule has a significant economic impact on a substantial number of small entities, the impact of concern is any significant adverse economic impact on small entities, since the primary purpose of the regulatory flexibility analyses is to identify and address regulatory alternatives ''which minimize any significant economic impact of the proposed rule on small entities'' 5 U.S.C. 603 and 604. Thus, an agency may certify that a proposed rule will not have a significant economic impact on a substantial number of small entities if it relieves regulatory burden, or otherwise has a positive economic effect on all of the small entities subject to the proposed rule. This rule, as proposed, is projected to reduce the burden on regulated entities by conditionally exempting them from the RCRA subtitle C hazardous waste management requirements associated with CO_2 streams captured, transported, and injected into UIC Class VI wells. We have, therefore, concluded that today's proposed rule will relieve regulatory burden for all affected small entities. We continue to be interested in the potential impacts of the proposed rule on small entities and welcome comments on issues related to such impacts.

[60] 211111 (500 persons), 221112 (500 persons), 322121 (750 persons), 324110 (1,500 persons), 324199 (500 persons), 325120 (1,000 persons), 325193 (1,000 persons), 325311 (1,000 persons), and 327310 (750 persons).

D. Unfunded Mandates Reform Act

This action contains no Federal mandates under the provisions of Title II of the Unfunded Mandates Reform Act of 1995 (UMRA), 2 U.S.C. 1531–1538 for State, local, or tribal governments or the private sector. As explained above, this proposed exclusion is less stringent than the current RCRA Federal program, and states are therefore not required to adopt it. Moreover, the rule does not contain a Federal mandate that may result in expenditures of $100 million or more for state, local, and tribal governments, in the aggregate, or the private sector in any one year. Our analysis indicates that the proposed rule is expected to result in undiscounted annualized net savings to the regulated community ranging from $7.3 million to $44.9 million (3% discount rate). Incorporated into these net saving estimates is a negligible total estimated annualized cost to states of $70 to nearly $565, depending on the discount rate. Thus, this proposed rule is not subject to the requirements of sections 202 or 205 of UMRA.

This proposed rule is also not subject to the requirements of section 203 of UMRA because it contains no regulatory requirements that might significantly or uniquely affect small governments. Occasional requests for and review of certification statements is the only potential impact on small governments. Furthermore, no small governments are known to be owners or operators of compressed CO_2 facilities, storage facilities, transporters, or sequestration facilities. We encourage comments on potential unfunded mandates associated with this proposed action.

E. Executive Order 13132: Federalism

This action does not have federalism implications. It will not have substantial direct effects on the states, on the relationship between the national government and the states, or on the distribution of power and responsibilities among the various levels of government, as specified in Executive Order 13132 (64 FR 43255, August 10, 1999), because the rule will not impose any requirements on States or any other level of government. As explained above, today's proposed rule conditionally excludes CO_2 streams that are hazardous from the definition of hazardous waste, where such streams, in accordance with the rule, are captured from emission sources and injected into UIC Class VI wells for purposes of GS, but States would not be required to adopt the rule. Thus, Executive Order 13132 does not apply to this action.

In the spirit of Executive Order 13132, and consistent with EPA policy to promote communications between EPA and State and local governments, EPA specifically solicits comment on this proposed action from State and local officials.

F. Executive Order 13175: Consultation and Coordination With Indian Tribal Governments

This action does not have tribal implications, as specified in Executive Order 13175 (65 FR 67249, November 9, 2000). No tribal governments are known to generate CO_2 streams or own or operate UIC Class VI wells subject to the proposed rule. Furthermore, we have identified no existing CO_2 pipelines that cross tribal lands. Thus, Executive Order 13175 does not apply to this action. EPA specifically solicits additional comment on this proposed action from tribal officials.

G. Executive Order 13045: Protection of Children From Environmental Health and Safety Risks

This action is not subject to EO 13045 (62 FR 19885, April 23, 1997) because it is not economically significant as defined in EO 12866, and because the Agency does not believe the environmental health or safety risks addressed by this action presents a disproportionate risk to children. The public is invited to submit comments or identify peer-reviewed studies and data that are relevant to assessing the effects of early life exposure to CO_2 streams captured from emission sources and transported to and injected into UIC Class VI wells for purposes of GS.

H. Executive Order 13211: Actions That Significantly Affect Energy Supply, Distribution, or Use

This action is not a ''significant energy action'' as defined in Executive Order 13211 (66 FR 28355, May 22, 2001), because it is not likely to have a significant adverse effect on the supply, distribution, or use of energy. The only effect of this action will be to conditionally exclude CO_2 streams that are hazardous from the definition of hazardous waste, where such streams are captured from emission sources and injected into UIC Class VI wells for purposes of GS. This conditional exclusion would allow for the GS of CO_2, while maintaining protection of human health and the environment, and would not significantly disrupt the supply, distribution, or use of energy.

I. National Technology Transfer and Advancement Act

Section 12(d) of the National Technology Transfer and Advancement Act of 1995 (''NTTAA''), Public Law 104–113, 12(d) (15 U.S.C. 272 note) directs EPA to use voluntary consensus standards in its regulatory activities unless to do so would be inconsistent with applicable law or otherwise impractical. Voluntary consensus standards are technical standards (*e.g.,* materials specifications, test methods, sampling procedures, and business practices) that are developed or adopted by voluntary consensus standards bodies. NTTAA directs EPA to provide Congress, through OMB, explanations when the Agency decides not to use available and applicable voluntary consensus standards.

This proposed rulemaking does not involve technical standards. Therefore, EPA is not considering the use of any voluntary consensus standards.

J. Executive Order 12898: Federal Actions To Address Environmental Justice in Minority Populations and Low-Income Populations

Executive Order (EO) 12898 (59 FR 7629, February 16, 1994) establishes Federal executive policy on environmental justice. Its main provision directs Federal agencies, to the greatest extent practicable and permitted by law, to make environmental justice part of their mission by identifying and addressing, as appropriate, disproportionately high and adverse human health or environmental effects of their programs, policies, and activities on minority populations and low-income populations in the United States.

EPA has determined that this proposed rule will not have disproportionately high and adverse human health or environmental effects on minority or low-income populations because it does not affect the level of protection provided to human health or the environment. The only effect of this action will be to conditionally exclude CO_2 streams that are hazardous from the definition of hazardous waste, where such streams are captured from emission sources and injected into UIC Class VI wells for purposes of GS, and meet other conditions. Existing regulations governing the generation, transportation, and injection of CO_2 streams in UIC Class VI wells are expected to provide safety to human health and the environment, making additional regulation under RCRA subtitle C unnecessary (see discussion under Section IV).

List of Subjects in 40 CFR Parts 260 and 261

Environmental protection, Hazardous waste, Recycling, Reporting and recordkeeping requirements

Dated: August 1, 2011.

Lisa P. Jackson,

Administrator.

For the reasons set out in the preamble, Parts 260 and 261 of title 40, Chapter I of the Code of Federal Regulations are proposed to be amended as follows:

PART 260—HAZARDOUS WASTE MANAGEMENT SYSTEM: GENERAL

1. The authority citation for Part 260 continues to read as follows:

Authority: 42 U.S.C. 6905, 6912(a), 6921–6927, 6930, 6935, 6937–6939, and 6974.

Subpart B—Definitions

2. Section 260.10 is amended by adding in alphabetical order the definition of ''Carbon dioxide stream'' to read as follows:

§ 260.10 Definitions.

* * * * *

Carbon dioxide stream means carbon dioxide that has been captured from an emission source (*e.g.,* power plant), plus incidental associated substances derived from the source materials and the capture process, and any substances added to the stream to enable or improve the injection process.

* * * * *

PART 261—IDENTIFICATION AND LISTING OF HAZARDOUS WASTE

3. The authority citation for Part 261 continues to read as follows:

Authority: 42 U.S.C. 6905, 6912(a), 6921, 6922, 6924(y), and 6938.

4. Section 261.4 is amended by adding a new paragraph (h) to read as follows:

§ 261.4 Exclusions.

* * * * *

(h) *Carbon Dioxide Stream Injected for Geologic Sequestration.* Carbon dioxide streams that are captured and transported for purposes of injection into an underground injection well subject to the requirements for Class VI Underground Injection Control wells, including the requirements in 40 CFR parts 144 and 146 of the Underground Injection Control Program of the Safe Drinking Water Act, are not a hazardous waste, provided the following conditions are met.

(1) Carbon dioxide streams that meet all of the following conditions are excluded from the definition of hazardous waste:

(i) Transportation of the carbon dioxide stream must be in compliance with applicable Department of Transportation requirements;

(ii) Injection of the carbon dioxide stream must be in compliance with the applicable requirements for Class VI Underground Injection Control wells, including the applicable requirements in 40 CFR parts 144 and 146;

(iii) No other hazardous wastes may be mixed with, or otherwise co-injected with, the carbon dioxide stream; and

(iv) Any generator of a carbon dioxide stream, and any Class VI Underground Injection Control well owner or operator, who claims that a carbon dioxide stream is excluded under paragraph (h)(1) of this section, must have an authorized representative (as defined in 40 CFR 260.10) sign a certification statement worded as follows:

I certify under penalty of law that the carbon dioxide stream that I am claiming to be excluded under 40 CFR 261.4(h)(1) meets all of the conditions set forth in that paragraph.

The signed certification statement must be kept on-site for no less than three years. The signed certification statement must be made available within 72 hours of a written request from the Regional Administrator or state Director (if located in an authorized state), or their designee, and shall be renewed every year by persons claiming the exclusion in 40 CFR 261.4(h). The yearly renewal of a certification statement under this paragraph means that an authorized representative must annually prepare and sign a new copy of the certification statement.

[FR Doc. 2011–19915 Filed 8–5–11; 8:45 am]

BILLING CODE 6560–50–P

ENVIRONMENTAL PROTECTION AGENCY

40 CFR Part 370

[EPA–HQ–SFUND–2010–0763; FRL–9448–8]

RIN 2050–AG64

Hazardous Chemical Reporting: Revisions to the Emergency and Hazardous Chemical Inventory Forms (Tier I and Tier II)

AGENCY: Environmental Protection Agency (EPA).

ACTION: Proposed rule.

SUMMARY: The U.S Environmental Protection Agency (EPA or the Agency) is proposing to revise the Emergency and Hazardous Chemical Inventory Forms (Tier I and Tier II) under Section 312 of the Emergency Planning and Community Right-to-Know Act (EPCRA) to add new data elements and revise some existing data elements.

DATES: Comments must be received on or before October 7, 2011.

ADDRESSES: Submit your comments, identified by Docket ID No. EPA–HQ–SFUND–2010–0763 by one of the following methods:

- *http://www.regulations.gov*: Follow the on-line instructions for submitting comments.
- *E-mail: superfund.docket@epa.gov.*
- *Fax:* (202) 566–0224.
- *Mail:* EPA Docket Center, Superfund Docket, Environmental Protection Agency, Mailcode: 2822T, 1200 Pennsylvania Ave., NW., Washington, DC 20460. In addition, please mail a copy of your comments on the information collection provisions to the Office of Information and Regulatory Affairs, Office of Management and Budget (OMB), Attn: Desk Officer for EPA, 725 17th St., NW., Washington, DC 20503.
- *Hand Delivery:* Environmental Protection Agency West Building, Room 3334, 1301 Constitution Avenue, NW., Washington, DC 20004. Such deliveries are only accepted during the Docket's normal hours of operation, and special arrangements should be made for deliveries of boxed information.

Instructions: Direct your comments to Docket ID No. EPA–HQ–SFUND–2010–0763. EPA's policy is that all comments received will be included in the public docket without change and may be made available online at *http://www.regulations.gov*, including any personal information provided, unless the comment includes information claimed to be Confidential Business Information (CBI) or other information whose disclosure is restricted by statute. Do not submit information that you consider to be CBI or otherwise protected through *http://www.regulations.gov* or e-mail. The *http://www.regulations.gov* Web site is an ''anonymous access'' system, which means EPA will not know your identity or contact information unless you provide it in the body of your comment. If you send an e-mail comment directly to EPA without going through *http://www.regulations.gov,* your e-mail address will be automatically captured and included as part of the comment that is placed in the public docket and made available on the Internet. If you submit an electronic comment, EPA recommends that you include your name and other contact information in the body of your comment and with any disk or CD–ROM you submit. If EPA cannot read your comment due to technical difficulties and cannot contact you for clarification, EPA may not be able to consider your comment. Electronic files should avoid the use of special characters, any form of encryption, and be free of any defects or viruses. For additional information about EPA's public docket, visit the EPA Docket Center homepage at *http://www.epa.gov/epahome/dockets.htm.*

Docket: All documents in the docket are listed in the *http://www.regulations.gov* index. Although listed in the index, some information is not publicly available, *e.g.,* CBI or other information whose disclosure is restricted by statute. Certain other material, such as copyrighted material will be publicly available only in hard copy. Publicly available docket materials are available either electronically in *http://www.regulations.gov* or in hard copy at the Superfund Docket, EPA/DC, EPA West Building, Room 3334, 1301 Constitution Ave., NW., Washington, DC. The Public Reading Room is open from 8:30 a.m. to 4:30 p.m., Monday through Friday, excluding legal holidays. The telephone number for the Public Reading Room is (202) 566–1744, and the telephone number for the Superfund Docket is (202) 566–0276.

FOR FURTHER INFORMATION CONTACT: Sicy Jacob, Office of Emergency Management, Mailcode 5104A, Environmental Protection Agency, 1200 Pennsylvania Avenue, NW., Washington DC 20004; telephone number: (202) 564–8019; fax number: (202) 564–2620; e-mail address: *jacob.sicy@epa.gov*. You may also contact the Superfund, TRI, EPCRA, RMP and Oil Information Center at (800) 424–9346 or (703) 412–9810 (in the Washington, DC, metropolitan area). You may wish to visit the Office of Emergency Management (OEM) Internet site at *http://www.epa.gov/emergencies.*

SUPPLEMENTARY INFORMATION: Here are the contents of today's preamble.

I. General Information
- A. Who is affected by this proposed rule?
- B. What should I consider as I prepare my comments for EPA?
- C. What is the statutory authority for this proposed rule?
- D. What is the background of this proposed rule?

II. What are the revisions that EPA is proposing on the Tier I and Tier II forms?
- A. Facility Identification
- B. Name of the Facility's Parent Company and Owner or Operator of the Facility
- C. Facility Emergency Coordinator

D. Tier I and Tier II Information Contacts
E. Subject to Emergency Planning Notification Under Section 302 of EPCRA
F. Subject to Chemical Accident Prevention Under Section 112(r) of the Clean Air Act (40 CFR part 68, Risk Management Program)
G. Range Codes and Ranges for Reporting Maximum Amount and Average Daily Amount
III. What are the revisions specific to the Tier II form proposed by EPA in this rule?
A. Chemical Information
B. Storage Types and Conditions
IV. Statutory and Executive Orders
A. Executive Order 12866: Regulatory Planning and Review and Executive Order13563: Improving Regulation and Regulatory Review
B. Paperwork Reduction Act
C. Regulatory Flexibility Act
D. Unfunded Mandates Reform Act
E. Executive Order 13132 (Federalism)
F. Executive Order 13175 (Consultation and Coordination With Indian Tribal Governments)
G. Executive Order 13045 (Protection of Children From Environmental Health Risks and Safety Risks)
H. Executive Order 13211 (Energy Effects)
I. National Technology Transfer and Advancement Act (''NTAA'')
J. Executive Order 12898: (Federal Actions To Address Environmental Justice in Minority Populations and Low-Income Populations)

I. General Information

A. Who is affected by this proposed rule?

Entities that would be affected by this proposed rule are those organizations and facilities subject to Section 312 of the Emergency Planning and Community Right-to-Know Act (EPCRA) and its implementing regulations found in 40 CFR part 370. If you have questions regarding the applicability of this action to a particular entity, consult the person listed in the preceding **FOR FURTHER INFORMATION CONTACT** section.

B. What should I consider as I prepare my comments for EPA?

Tips for Preparing Your Comments. When submitting comments remember to:

- Identify the rulemaking by docket number and other identifying information (subject heading, **Federal Register** date and page number).
- Follow directions—The Agency may ask you to respond to specific questions or organize comments by referencing a Code of Federal Regulations (CFR) part or section number.
- Explain why you agree or disagree, suggest alternatives, and substitute language for your requested changes.
- Describe any assumptions and provide any technical information and/or data that you used.
- If you estimate potential costs or burdens, explain how you arrived at your estimate in sufficient detail to allow for it to be reproduced.
- Provide specific examples to illustrate your concerns, and suggest alternatives.
- Explain your views as clearly as possible.
- Make sure to submit your comments by the comment period deadline identified.

C. What is the statutory authority for this proposed rule?

This proposed rule is being issued under EPCRA, which was enacted as Title III of the Superfund Amendments and Reauthorization Act (SARA) of 1986 (Pub. L. 99–499). The Agency relies on sections 312 and 328 of EPCRA for general rulemaking authority.

D. What is the background of this proposed rule?

Title III of SARA (EPCRA) establishes authorities for emergency planning and preparedness, emergency release notification reporting, community right-to-know reporting, and toxic chemical release reporting. It is intended to encourage State and local planning and preparedness for releases of extremely hazardous substances (EHSs) and to provide the public, local governments, fire departments and other emergency officials with information concerning chemical releases and the potential chemical risks in their communities. EPCRA consists of emergency planning notification and community right-to-know reporting of hazardous and toxic chemicals. The implementing regulations as well as substances and reporting thresholds are codified in 40 CFR parts 355 and 370.

Under the emergency planning provisions of EPCRA, codified in 40 CFR part 355, a facility is required to provide a one-time notification to the State Emergency Response Commission (SERC) and the local emergency planning committee (LEPC) if the facility has any EHS present at the site in excess of its threshold planning quantity (TPQ). EHSs and their TPQs are listed in 40 CFR part 355, Appendix A and B. The emergency planning notification occurred approximately seven months after the law was passed for facilities that existed at that time. Any facilities that became subject to the notification requirement after that date are required to comply as provided in 40 CFR part 355. Facilities that are currently covered by these regulations are required to report only changes occurring at the facility that may be relevant to emergency planning. LEPCs use the information obtained from facilities to develop emergency response plans required under section 303 of EPCRA. Section 303 of EPCRA also requires LEPCs to review these plans annually and to adjust them accordingly, for changes that have occurred in their community.

Reporting requirements under the community right-to-know provisions, sections 311 and 312 of EPCRA are on-going obligations. Sections 311 and 312 of EPCRA apply to owners and operators of facilities that are required to prepare or have available a material safety data sheet (MSDS) for a hazardous chemical defined under the Occupational Safety and Health Act (OSHA) Hazard Communication Standard (HCS). If the hazardous chemical is present at or above the reporting thresholds specified in 40 CFR part 370, the facility owner or operator is required to submit a MSDS or a list that contains the hazardous chemical under section 311 of EPCRA. Under section 312 of EPCRA, if a hazardous chemical is present at or above the reporting threshold specified in 40 CFR part 370, the facility owner or operator is required to submit an emergency and hazardous chemical inventory form (Tier I or Tier II) to the SERC, LEPC and the local fire department annually by March 1.

As required by section 312(g) of EPCRA, EPA published two emergency and hazardous chemical inventory reporting forms, Tier I and Tier II. The Tier I inventory form requires facilities to report minimum information on the general types and locations of hazardous chemicals present at the facility. The Tier II inventory form requires facilities to report specific information on the amounts and locations of hazardous chemicals present at the facility. The information required under Tier I and Tier II can be found in §§ 370.41 and 370.42 of the regulations.

Section 312(a)(2) of EPCRA states that the owner or operator of a facility shall submit the Tier I inventory form annually by March 1 to the SERC, LEPC and the local fire department. However, section 312(e) states that the owner or operator of a facility shall submit the Tier II inventory form upon request by their SERC, LEPC or the fire department with jurisdiction over the facility. Currently, all states require facilities to submit the federal Tier II inventory form or the state developed inventory reporting form.

In addition to the information obtained under the emergency planning

provisions of EPCRA, LEPCs use the information provided on the facility's annual emergency and hazardous chemical inventory form to update the emergency response plan for their communities. States were always given the flexibility to implement the EPCRA program as appropriate for their State to meet the goals of EPCRA, which is to prepare for and respond to releases of EHSs and to provide the public with information on potential chemical risks in their communities. This flexibility includes adding more chemicals, setting lower reporting thresholds and creating a reporting form or format that includes more information than is required by the federal reporting requirements. Some States developed their own inventory reporting form, including electronic reporting format. Other States use the federal inventory reporting form or the federal electronic reporting format, Tier2 Submit.

Over the years, stakeholders requested that EPA add new data elements to the forms that would be useful to improve their community emergency response plans. In this action, EPA is proposing new data elements to make the forms more useful for State and local agencies and to better inform the public on chemical hazards in their communities. We are also proposing to revise some existing data elements to make reporting easier for facilities. The elements proposed herein are intended to meet the purpose of EPCRA (Title III of SARA) which is ''* * * to encourage and support State and local planning for emergencies caused by the release of hazardous chemicals and to provide citizens and governments with information concerning potential chemical hazards present in their communities.'' *See 55 FR 30632, Community Right-to-Know Reporting Requirements, Final Rule, July 26, 1990.*

II. What are the revisions that EPA is proposing on the Tier I and Tier II forms?

The Tier I and Tier II forms were first published in 1987 and were amended in 1990. Recently, State and local agencies requested that EPA modify these forms to include new data elements and revise existing data elements to make it more useful for emergency planning and response. EPA requests public comment on each of the new and revised data elements proposed by EPA in this notice for the Tier I and Tier II forms. These elements are described below.

Information requirements for the Tier I and Tier II forms can be found in 40 CFR 370.41 and 370.42, respectively. Current Tier I and II forms are available on the Agency's Web site at *http://www.epa.gov/emergencies.* Additionally, the current Tier I and Tier II inventory forms and the proposed Tier I and II inventory forms with the additional elements and changes highlighted are in the docket for today's rulemaking under the docket number EPA–HQ–SFUND–2010–0763.

A. Facility Identification

In addition to the information currently required on the Tier I and Tier II forms under facility identification, we are proposing to add new data elements for facility phone number, latitude and longitude, and number of full-time employees.

Section 312 covers a broad range of chemicals and facilities. Some of the facilities covered under section 312 also may be subject to the Chemical Accident Prevention under section 112 (r) of the Clean Air Act (CAA), also known as the Risk Management Program or the Toxic Release Inventory (TRI) Program under section 313 of EPCRA. For those facilities that are subject to these programs, EPA is also proposing to add data elements for facility identification numbers that are assigned under these two programs. These data elements should be readily available to facilities that are covered by these two programs. Stakeholders have requested that EPA add these data elements in order to provide more complete information on the facilities to the public and to the State and local agencies responsible for emergency planning and response.

In addition to reporting the number of full-time employees, local emergency responders requested that EPA require facilities such as hotels, colleges, universities, and convention centers to report the total number of people that may occupy a building at any given time, to assist them in emergency planning and response. While EPA is not including this additional element in today's proposal, EPA requests comments if number of occupants should also be added as a data element to the Tier I and II inventory forms.

B. Name of the Facility's Parent Company and Owner or Operator of the Facility

States and LEPCs informed EPA that some facilities have sites in remote locations and do not have operators present at all times. Thus, if there is a need to contact someone in an emergency, emergency response officials and State and local agencies need the contact information of the facility's parent company or the owner or operator of the facility. Therefore, under the facility identification section, EPA is also proposing to require facilities to provide information on the facility's parent company and the owner or operator of the facility, such as name, address and phone number, as well as the Dun and Bradstreet number of the facility's parent company. EPA is also proposing that the facility owner or operator provide their e-mail address.

C. Facility Emergency Coordinator

Under EPCRA section 303(d)(1), a facility is required to provide the LEPC with the name and contact information of a facility representative who will participate in the emergency planning process as a facility emergency coordinator. The regulations in § 355.20 (c) require facilities to notify LEPCs of any changes relevant to the emergency planning within 30 days after the changes have occurred. However, EPA also believes that this information should be provided on the facility's annual inventory form since LEPCs and other emergency response coordinators may need this information during an emergency. Therefore, EPA is proposing to add this data element to the Tier I and Tier II forms.

D. Tier I and Tier II Information Contacts

Since the information reported under EPCRA section 312 is used by LEPCs to improve emergency response plans, these entities may need to contact the facility regarding information that is reported on the Tier I and Tier II reporting forms. The information filed under section 312 is also used by emergency response officials during an emergency situation. As requested by these entities, the Agency is proposing to require the name, title, phone number and e-mail address of the person knowledgeable or responsible for completing the information on the Tier I and Tier II forms.

E. Subject to Emergency Planning Under Section 302 of EPCRA

EPCRA section 302(c) requires facilities to notify their SERC and LEPC that they are subject to emergency planning if there is an EHS present at the facility at or above its threshold planning quantity (TPQ). For facilities in existence when EPCRA was enacted, this was a one-time notification that occurred approximately seven months after enactment (in May 1987). Facilities that became subject to the emergency planning notification requirement after this date are required to provide notification to their SERC and LEPC within sixty days of becoming subject to the requirements.

EPCRA section 303(a) requires each LEPC to develop an emergency response plan for their communities. Such plans were to be developed in two years after the enactment of EPCRA (October 1988). EPCRA section 303(a) also requires LEPCs to review the emergency response plan once a year. LEPCs use the information reported by facilities under section 302(c) to develop or update the emergency response plans in their community. The Agency believes that some of the facilities which complied with the requirements under section 302(c) may no longer be subject to emergency planning, for a number of reasons, including using a chemical that is safer than an EHS, having an EHS below the TPQ, etc. The Agency also believes that facilities that may become subject to the annual inventory reporting under EPCRA section 312 may not be aware of the requirements under EPCRA section 302. The EPCRA section 312 reporting requirement covers a broad range of chemicals, including EHSs that are subject to emergency planning.

The reporting thresholds and requirements for EHSs are different under sections 302 and 312. The reporting requirement for EHSs under section 302 is to provide notification to the SERC and LEPC if the facility has any EHS at or above the TPQ in order to complete emergency planning requirements for the community. The reporting requirement for EHSs under section 312 is to submit an inventory form annually by March 1 to the SERC, LEPC and the local fire department if the EHS is present at a facility at any one time in an amount equal to or greater than 500 pounds or the TPQ, whichever is less in order to inform the public of chemical hazards in their community.

Since the notification under section 302(c) is a one-time notification which occurred in 1987 for most facilities, and since section 303(a) requires LEPCs to update the emergency plan annually, it would be useful for LEPCs to get an update from facilities clarifying whether they are still subject to emergency planning. This will help ensure that local emergency plans are up-to-date and include all appropriate facilities.

To better account for facilities subject to emergency planning and for LEPCs to use this information to improve the emergency response plans in their community, LEPCs requested that EPA require facilities to report if they are subject to emergency planning notification under EPCRA section 302. As a result, the Agency is proposing to add a new data element to indicate if facilities are subject to the emergency planning notification under EPCRA section 302.

F. Subject to Chemical Accident Prevention Under Section 112(r) of the Clean Air Act (40 CFR Part 68, Risk Management Program)

Section 112(r) of the Clean Air Act (CAA) amendments of 1990 requires certain facilities to develop and implement a risk management program to prevent accidental releases of regulated chemicals. Facilities subject to section 112(r) of the CAA are required to implement an accident prevention program and an emergency response program, conduct hazard assessment and summarize and submit to EPA information about these programs and hazards in a risk management plan (RMP). The implementing regulations are codified in 40 CFR part 68, Chemical Accident Prevention, also known as the Risk Management Program.

In addition to the information reported under EPCRA section 312, LEPCs and States use the information reported in RMPs to improve the emergency response plans in each community. In order to better serve this purpose, EPA is proposing to add a new data element to both the Tier I and Tier II forms to indicate whether the facility is subject to chemical accident prevention under section 112(r) of the CAA.

G. Range Codes and Ranges for Reporting Maximum Amount and Average Daily Amount

As stated in EPCRA section 312(d), the information requirements in 40 CFR 370.41 and 370.42 for the Tier I and Tier II forms currently list range codes for reporting the maximum amount and average daily amounts of hazardous chemicals present at the site in the preceding calendar year. The range codes currently listed in the regulations are very broad. Such information is not as useful as specific quantity information for effective emergency response planning. Since the statute specifically states that an estimate in ranges for the maximum amount and average daily amount should be reported on the Tier I and II inventory forms, the regulations would still require facilities to report in ranges. However, in order for the States, local agencies and emergency response officials to have information on the maximum amount and average daily amount that are closer to the actual amounts present at the facility, EPA is proposing to narrow the ranges that are in the existing regulations. EPA specifically seeks comments if the range codes and the ranges proposed below would be more useful to LEPCs for effective emergency response planning or for responding to emergencies, and if not, what ranges would be more useful to the LEPCs for effective emergency response planning or for responding to emergencies.

Range codes	Weight range in pounds	
	From	To
01	0	99.
02	100	499.
03	500	999.
04	1,000	4,999.
05	5,000	9,999.
06	10,000	24,999.
07	25,000	49,999.
08	50,000	74,999.
09	75,000	99,999.
10	100,000	499,999.
11	500,000	999,999.
12	1,000,000	9,999,999.
13	10,000,000	Greater than 10 million.

III. What are the revisions specific to the Tier II form proposed by EPA in this rule?

Facilities are required to report specific information about hazardous chemicals on the Tier II inventory form. Some states may require additional information than that which is required under the federal reporting requirements. In addition to the new data elements proposed in the previous section of this document, EPA is proposing to revise some existing data elements on the Tier II federal inventory form.

A. Chemical Information

In the final rule published on November 3, 2008 (73 FR 65452), EPA clarified how to report a hazardous chemical mixture after determining if the mixture or its hazardous components meet or exceed the reporting thresholds specified in 40 CFR part 370. In that notice, the Agency clarified that if a hazardous chemical in the mixture is an EHS, the facility has to aggregate any and all amounts of that EHS present throughout the facility in mixtures and in pure form to determine if the reporting threshold for EHS has been met or exceeded. If the reporting threshold for that EHS is exceeded, then the facility would have an option to report the mixture or the EHS component.

To determine if the reporting threshold has been met or exceeded for a mixture that contains a non-EHS hazardous chemical component, a facility has the option to either add up

all the amounts of that non-EHS hazardous chemical present as a component in all mixtures and all other quantities of that non-EHS hazardous chemical present throughout the facility or consider the total quantity of that mixture present throughout the facility. Once it is determined that the reporting threshold is met or exceeded for either the non-EHS hazardous chemical component or the mixture, the facility has the option to report the non-EHS hazardous chemical component or the mixture itself. See § 370.14 for requirements on reporting mixtures. As stated in § 370.14(b), EPA encourages facilities to be consistent with their reporting under EPCRA section 311 when reporting mixtures.

In this notice, EPA is proposing to modify the chemical information reporting section of the Tier II inventory form to make it more user-friendly for States and local agencies, as well as the emergency response officials. This revision will also benefit facilities by clarifying how to report mixtures on the Tier II form. Specifically, the current form requires facilities to report the name of the mixture, indicate whether the mixture contains an EHS, indicate the physical and health hazards of the mixture, and report the amount present on-site, as well as the type of storage and storage locations. The regulated community and the state and local agencies, however, are unsure if the amount present on-site refers to the mixture or the non-EHS hazardous chemical or the EHS in the mixture. In order to clarify the reporting of pure chemicals vs. mixtures, the proposed Tier II form has separate entries for mixtures and pure chemicals. The entry for mixtures includes a separate line for mixture name, amount of mixture present (*i.e.* maximum and average daily amount), the EHS(s) name, and the amount of EHS(s) present (*i.e.* maximum and average daily amount). Facilities still have the option to report the mixture or the hazardous chemical component as stated in § 370.14.

B. Storage Types and Conditions

The Tier II form currently requires facilities to report the codes for types of storage (*i.e.* above ground tank, steel drum) and storage conditions (*i.e.* temperature, pressure). A code is currently listed for each type of storage and storage conditions in § 370.43. In order to make the form more user-friendly and also to have information readily available to emergency response officials in an emergency, EPA proposes that facilities list the types of storage (*i.e.* above ground tank, steel drum) and storage conditions (*i.e.* ambient temperature, ambient pressure) on the Tier II form rather than noting the reporting codes.

EPA seeks public comment on all the proposed new data elements and revisions of the existing data elements described in this proposed rule. The Agency also requests that commenters, including State and local agencies suggest any additional information that should be added to the Tier I and Tier II forms in order to make them more useful for emergency planning and response.

Finally, we would note that the Agency is not proposing to revise the introductory paragraph to §§ 370.41 and 370.42. However, since we are proposing to add some new data elements and proposing to revise some existing data elements, we re-arranged and re-numbered all the paragraphs to be consistent with how each data element appears on the Tier I and Tier II inventory forms.

IV. Statutory and Executive Order Reviews

A. Executive Order 12866: Regulatory Planning and Review and Executive Order 13563: Improving Regulation and Regulatory Review

This action is not a ''significant regulatory action'' under the terms of Executive Order 12866 (58 FR 51735, October 4, 1993) and is therefore not subject to review under the Executive Orders 12866 and 13563 (76 FR 3821, January 21, 2011). We believe this action is administrative and non-controversial. The proposed data elements are readily available to the facility. Stakeholders requested that EPA add these new data elements because the additional information would improve community emergency response planning. In addition, revising the existing data elements will make the forms more user-friendly.

The proposed regulation will not have an annual effect on the economy of $100 million or more or adversely affect in a material way the economy, a sector of the economy, productivity, competition, jobs, the environment, public health or safety, or State, local, or tribal governments or communities.

B. Paperwork Reduction Act

The information collection requirements in this proposed rule have been submitted for approval to the Office of Management and Budget (OMB) under the Paperwork Reduction Act, 44 U.S.C. 3501 *et seq.* The Information Collection Request (ICR) document prepared by EPA has been assigned EPA ICR number 1352.13. This action may impose only minimal reporting burden on facilities since the data elements proposed are readily available to the facility. Revising the existing data elements will make the forms more user-friendly and ease reporting requirements for facilities. Stakeholders requested that EPA add the new data elements since the additional information would be useful to develop or modify their community emergency response plans. New data elements, such as facility emergency coordinator needs to be updated annually for LEPCs to coordinate the emergency plans and response to emergencies in their community.

The Office of Management and Budget (OMB) has previously approved the information collection requirements contained in regulations at 40 CFR part 370 which includes information requirements for the Tier I and Tier II inventory forms, under the provisions of the *Paperwork Reduction Act,* 44 U.S.C. 3501 *et seq.* and has assigned OMB control number 2050–0072, EPA ICR number 1352.11. The OMB control numbers for EPA's regulations are listed in 40 CFR part 9. Burden is defined at 5 CFR 1320.3(b). An agency may not conduct or sponsor, and a person is not required to respond to, a collection of information unless it displays a currently valid OMB control number. The OMB control numbers for EPA's regulations are listed in 40 CFR part 9.

To comment on the Agency's need for this information, the accuracy of the provided burden estimates, and any suggested methods for minimizing respondent burden, EPA has established a public docket for this rule, which includes this ICR, under Docket ID number EPA–HQ–SFUND–2010–0763. Submit any comments related to the ICR to EPA and OMB. See **ADDRESSES** section at the beginning of this notice for where to submit comments to EPA. Send comments to OMB at the Office of Information and Regulatory Affairs, Office of Management and Budget, 725 17th Street, NW., Washington, DC 20503, Attention: Desk Office for EPA. Since OMB is required to make a decision concerning the ICR between 30 and 60 days after August 8, 2011, a comment to OMB is best assured of having its full effect if OMB receives it by September 7, 2011. The final rule will respond to any OMB or public comments on the information collection requirements contained in this proposal.

C. Regulatory Flexibility Act

The Regulatory Flexibility Act (RFA) generally requires an agency to prepare a regulatory flexibility analysis of any rule subject to notice and comment

rulemaking requirements under the Administrative Procedure Act or any other statute unless the agency certifies that the rule will not have a significant economic impact on a substantial number of small entities. Small entities include small businesses, small organizations, and small governmental jurisdictions.

For purposes of assessing the impacts of today's proposed rule on small entities, small entity is defined as: (1) A small business as defined by the Small Business Administration's (SBA) regulations at 13 CFR 121.201; (2) a small governmental jurisdiction that is a government of a city, county, town, school district or special district with a population of less than 50,000; and (3) a small organization that is any ''not-for-profit enterprise which is independently owned and operated and is not dominant in its field.''

After considering the economic impacts of today's proposed rule on small entities, I certify that this action will not have a significant economic impact on a substantial number of small entities. In determining whether a rule has a significant economic impact on a substantial number of small entities, the impact of concern is any significant adverse economic impact on small entities, since the primary purpose of the regulatory flexibility analyses is to identify and address regulatory alternatives ''which minimize any significant economic impact of the rule on small entities.'' 5 U.S.C. 603 and 604. Thus, an agency may certify that a rule will not have a significant economic impact on a substantial number of small entities if the rule relieves regulatory burden, or otherwise has a positive economic effect on all of the small entities subject to the rule.

The new data elements that we are proposing to add have been requested by stakeholders in an effort to develop or modify their community emergency response plans. In addition, revising the existing data elements will make the forms more user-friendly, and thus, will make reporting easier for facilities and will make the forms more user-friendly for state and local officials.

D. Unfunded Mandates Reform Act

This action contains no Federal mandates under the provisions of Title II of the Unfunded Mandates Reform Act of 1995 (UMRA), 2 U.S.C. 1532–1538 for State, local, or tribal governments or the private sector. This proposed rule does not impose any new requirements on State, local or tribal governments. The data elements we are proposing to add to the Tier I and Tier II inventory forms will be useful to state, local and tribal governments to develop or modify their community emergency response plans. In addition, the proposed revision to the existing data elements will make the forms more user-friendly.

This action is also not subject to the requirements of section 203 of UMRA because it contains no regulatory requirements that might significantly or uniquely affect small governments.

E. Executive Order 13132 (Federalism)

This action does not have federalism implications. It will not have substantial direct effects on the States, on the relationship between the national government and the States, or on the distribution of power and responsibilities among the various levels of government, as specified in Executive Order 13132. The data elements we are proposing to add to the Tier I and Tier II inventory forms will be useful to state, local and tribal governments to develop or modify their community emergency response plan. In addition, the proposed revision to the existing data elements will make the forms more user-friendly.

In the spirit of Executive Order 13132, and consistent with EPA policy to promote communications between EPA and State and local governments, EPA specifically solicits comment on this proposed action from State and local officials.

F. Executive Order 13175 (Consultation and Coordination With Indian Tribal Governments)

This action does not have tribal implications, as specified in Executive Order 13175, (65 FR 67249, November 9, 2000). The data elements we are proposing to add to the Tier I and Tier II inventory forms will be useful to the tribal governments to develop or modify their community emergency response plans. In addition, the proposed revision to the existing data elements will make the forms more user-friendly. This action does not impose any new requirements on tribal governments. Thus, Executive Order 13175 does not apply to this action.

G. Executive Order 13045 (Protection of Children From Environmental Health Risks and Safety Risks)

This action is not subject to EO 13045 (62 FR 19885, April 23, 1997) because it is not economically significant as defined in Executive Order 12866 and because the Agency does not believe the environmental health or safety risks addressed by this action present a disproportionate risk to children. The additional information that we are proposing to add to the Tier I and Tier II inventory forms will be useful to State and local officials to assist them in preparing the community in an emergency situation.

H. Executive Order 13211 (Energy Effects)

This action is not a ''significant energy action'' as defined in Executive Order 13211 (66 FR 28355 (May 22, 2001)), because it is not likely to have a significant adverse effect on the supply, distribution, or use of energy.

I. National Technology Transfer and Advancement Act (''NTTAA'')

Section 12(d) of the National Technology Transfer and Advancement Act of 1995 (''NTTAA''), Public Law 104–113, 12(d) (15 U.S.C. 272 note) directs EPA to use voluntary consensus standards in its regulatory activities unless doing so would be inconsistent with applicable law or would otherwise be impractical. Voluntary consensus standards are technical standards (*e.g.,* materials specifications, test methods, sampling procedures, and business practices) that are developed or adopted by voluntary consensus standards bodies. NTTAA directs EPA to provide Congress, through OMB, explanations of when the Agency decides not to use available and applicable voluntary consensus standards.

This proposed rule does not involve technical standards. Therefore, EPA does not consider the use of any voluntary consensus standards.

J. Executive Order 12898: Federal Actions To Address Environmental Justice in Minority Populations and Low-Income Populations

Executive Order (EO) 12898 (59 FR 7629 (February 16, 1994)) establishes Federal executive policy on environmental justice. Its main provision directs federal agencies, to the greatest extent practicable and permitted by law, to make environmental justice part of their mission by identifying and addressing, as appropriate, disproportionately high and adverse human health or environmental effects of their programs, policies, and activities on minority populations and low-income populations in the United States.

EPA has determined that this proposed rule does not have disproportionately high and adverse human health or environmental effects on minority or low-income populations because it does not affect the level of protection provided to human health or the environment. The new data elements that the Agency is proposing

would be useful to develop or modify the community's emergency response plan. In addition, revising the existing data elements will make the forms more user-friendly.

List of Subjects in 40 CFR Part 370

Emergency Planning and Community Right-to-Know Act (EPCRA), Hazardous chemicals, Emergency and hazardous chemical inventory forms, Hazardous substances, Intergovernmental relations, Reporting requirements, Superfund, Tier I and Tier II inventory forms.

Dated: August 1, 2011.

Lisa P. Jackson,

Administrator.

For the reasons discussed in the preamble, title 40, chapter I of the Code of Federal Regulations is proposed to be amended as follows:

PART 370—HAZARDOUS CHEMICAL REPORTING: COMMUNITY RIGHT-TO-KNOW

1. The authority citation for part 370 continues to read as follows:

Authority: 42 U.S.C. 11021 and 11022.

2. Section 370.41 is revised to read as follows:

§ 370.41 What is Tier I inventory information?

Tier I information provides State and local officials and the public with information on the general types and locations of hazardous chemicals present at your facility during the previous calendar year. The Tier I information is the minimum information that you must provide to be in compliance with the inventory reporting requirements of this part. If you are reporting Tier I information, you must report aggregate information on hazardous chemicals by hazard categories. There are two health hazard categories and three physical hazard categories for purposes of reporting under this part. These five hazard categories are defined in 40 CFR 370.66. Tier I information includes all of the following:

(a) The calendar year for the reporting period.

(b) The complete name and address of the location of your facility (include the full street address or state road, city, county, State and zip code), phone number, latitude, longitude, and the number of full time employees (FTE).

(c) The North American Industry Classification System (NAICS) code for your facility.

(d) Toxic Release Inventory (TRI) and Risk Management Plan (RMP) identification numbers, if available.

(e) The Dun & Bradstreet number of your facility.

(f) The name, mailing address, phone number and email address of the owner or operator of the facility.

(g) The name, mailing address, phone number, Dun & Bradstreet number and email address of the facility's parent company.

(h) The name, title, phone number(s) and email address of at least one local individual that can act as a referral if emergency responders need assistance in responding to a chemical accident at your facility. You must also provide an emergency phone number which will be available 24 hours a day, every day.

(i) An indication whether your facility is subject to the emergency planning notification requirement under section 302 of EPCRA, codified in 40 CFR part 355.

(j) The name, title, phone number, 24-hour phone number, and email address of the facility emergency coordinator.

Note to paragraph (j): Section 303(d)(1) of EPCRA requires facilities subject to the emergency planning notification requirement to designate a facility representative who will participate in the local emergency planning process as a facility emergency coordinator. EPA encourages facilities that are not subject to the emergency planning notification requirement also to provide this information, if available, for effective emergency planning in your community.

(k) An indication whether your facility is subject to the chemical accident prevention requirements under Section 112(r) of the Clean Air Act, codified in 40 CFR part 68, Chemical Accident Prevention Provisions, also known as the Risk Management Program regulations.

(l) The name, title, phone number, and email address of the person to contact for the information contained in the Tier I form.

(m) Certification. The owner or operator or the officially designated representative of the owner or operator must certify that all information included in the Tier I submission is true, accurate, and complete as follows: ''I certify under penalty of law that I have personally examined and am familiar with the information and that based on my inquiry of those individuals responsible for obtaining the information, I believe that the submitted information is true, accurate, and complete.'' This certification shall be accompanied by your full name, official title, signature, date signed, and total number of pages in the submission including all attachments.

Note to paragraph (m): Some states require electronic reporting (on-line or via diskettes) and electronic certification. Contact your state for the specific requirements in that state.

(n) An indication whether you are including any attachments (optional).

(o) An indication whether the information being reported is identical to that submitted the previous year.

(p) An estimate (in ranges) of the maximum amount of hazardous chemicals in each hazard category present at your facility at any time during the preceding calendar year. You must use codes that correspond to different ranges. The range codes are provided in § 370.43.

(q) An estimate (in ranges) of the average daily amount of hazardous chemicals in each hazard category present at your facility during the preceding calendar year. You must use codes that correspond to different ranges. The range codes are provided in § 370.43.

(r) The maximum number of days that any single hazardous chemical within each hazard category was present at your facility during the reporting period.

(s) The general locations of all applicable chemicals for each hazard type. General locations should include the names or identification of buildings, tank fields, lots, sheds or other such areas. You may also attach one of the following with your Tier I inventory form.

(A) *A site plan* with site indicated for buildings, lots, areas, etc. throughout your facility.

(B) *A list of site coordinate abbreviations* that correspond to buildings, lots, areas, etc., throughout your facility.

(C) *A description of dikes and other safeguard measures* for storage locations throughout your facility.

3. Section 370.42 is revised to read as follows:

§ 370.42 What is Tier II inventory information?

Tier II information provides State and local officials and the public with specific information on amounts and locations of hazardous chemicals present at your facility during the previous calendar year. Some states may require you to use a state reporting format including electronic reporting and certification for submitting your hazardous chemical inventory. Contact your state for the specific requirements in that state.

If you are reporting Tier II information, you must include all of the following:

(a) The calendar year of the reporting period.

(b) The complete name and address of the location of your facility (include the full street address or state road, city, county, State and zip code), phone number, latitude, longitude, and the number of full-time employees (FTE).

(c) The North American Industry Classification System (NAICS) code for your facility.

(d) Toxic Release Inventory (TRI) and Risk Management Plan (RMP) identification numbers, if available.

(e) The Dun & Bradstreet number of your facility.

(f) The name, mailing address, phone number, Dun & Bradstreet number and email address of the facility's parent company.

(g) The name, mailing address, phone number and email address of the owner or operator of the facility.

(h) The name, title, phone number(s) and email address of at least one local individual that can act as a referral if emergency responders need assistance in responding to a chemical accident at your facility. You must also provide an emergency phone number which will be available 24 hours a day, every day.

(i) The name, title, phone number and email address of the person to contact regarding information contained in the Tier II report.

(j) An indication if your facility is subject to the emergency planning notification requirement under section 302 of EPCRA, codified in 40 CFR part 355.

(k) The name, title, phone number, 24-hour phone number and email address of the facility emergency coordinator.

Note to paragraph (k): Section 303(d)(1) of EPCRA requires facilities subject to the emergency planning notification requirement to designate a facility representative who will participate in the local emergency planning process as a facility emergency coordinator. EPA encourages facilities not subject to the emergency planning notification requirement also to provide this information, if available, for effective emergency planning in your community.

(l) An indication whether your facility is subject to the chemical accident prevention requirements under section 112(r) of the Clean Air Act (CAA), codified in 40 CFR part 68, Chemical Accident Prevention Provisions, also known as the Risk Management Program regulations.

(m) Certification. The owner or operator or the officially designated representative of the owner or operator must certify that all information included in the Tier II submission is true, accurate, and complete as follows: ''I certify under penalty of law that I have personally examined and am familiar with the information and that based on my inquiry of those individuals responsible for obtaining the information, I believe that the submitted information is true, accurate, and complete.'' This certification must be accompanied by your full name, official title, signature, date signed, and total number of pages in the submission including all Confidential and Non-Confidential Information Sheets and all attachments.

Note to paragraph (m): Some states require electronic reporting (on-line or via diskettes) and electronic certification. Contact your state for the specific requirements in that state.

(n) An indication whether you are including any attachments (optional).

(o) An indication whether the information being reported is identical to that submitted the previous year.

(p) For each hazardous chemical that you are required to report, you must:

(1) Provide the chemical name (or the common name of the chemical) or the name of the mixture as provided on the Material Safety Data Sheet (MSDS) and provide the Chemical Abstract Service (CAS) registry number of the chemical(s) provided on the MSDS. If you are withholding the name in accordance with trade secret criteria, you must provide the generic class or category that is structurally descriptive of the chemical and indicate that the name is withheld because of trade secrecy. Trade secret criteria are addressed in § 370.64(a). Two separate entries are provided to make reporting easier for your facility.

Note to paragraph (p)(1): As provided in § 370.14(a), if you have a mixture that is a hazardous chemical on site you have an option to report the hazardous component or the mixture itself. See § 370.14 for more information on how to determine if a reporting threshold is met for a mixture containing a hazardous chemical and how to report that mixture.

(2) Indicate whether the chemical is a solid, liquid, or gas; and whether the chemical is an EHS. If reporting a hazardous chemical component in the mixture, indicate that it is part of a mixture.

Note to paragraph (p)(2): As provided in § 370.14(b), for each specific mixture, EPA encourages facilities to be consistent with their reporting under EPCRA section 311.

(3) Provide the name of each EHS in the mixture if you are reporting a mixture that contains an EHS. As provided in § 370.14(a), you also have an option to report the non-EHS hazardous components in the mixture.

(4) Indicate which hazard categories apply to the chemical. The five hazard categories are defined in § 370.66.

(5) Provide an estimate (in ranges) of the maximum amount of the hazardous chemical present at your facility on any single day during the preceding calendar year. If the hazardous chemical is a mixture, provide an estimate of the total amount of the mixture. If the mixture contains any EHS, provide the total amount of each EHS in that mixture. You must use codes that correspond to different ranges. The range codes are in § 370.43.

(6) Provide an estimate (in ranges) of the average daily amount of the hazardous chemical present at your facility during the preceding calendar year. If the hazardous chemical is a mixture, provide an estimate of the average daily amount of the mixture. If the mixture contains any EHS, provide the average daily amount of each EHS in the mixture. You must use codes that correspond to different ranges. The range codes are in § 370.43.

(7) Provide the maximum number of days that the hazardous chemical was present at your facility during the preceding calendar year.

(8) Provide the type of storage for the hazardous chemical or the mixture containing the hazardous chemical at your facility. Examples for type of storage: Above-ground tank, plastic or non-metallic drum, steel drum, cylinder, rail car, etc.

(9) Provide the storage conditions for the hazardous chemical or the mixture containing the hazardous chemical at your facility. Examples for type of storage conditions: Ambient pressure, less than ambient temperature/pressure, cryogenic conditions, etc.

(10)(i) Provide a brief description of the precise location(s) of the hazardous chemical or the mixture at your facility. You may also attach one of the following with your Tier II inventory form.

(A) *A site plan* with site indicated for buildings, lots, areas, etc. throughout your facility.

(B) *A list of site coordinate abbreviations* that correspond to buildings, lots, areas, etc., throughout your facility.

(C) *A description of dikes and other safeguard measures* for storage locations throughout your facility.

(ii) Under EPCRA section 324, you may choose to withhold from disclosure to the public the location information for a specific chemical. If you choose to withhold the location information from disclosure to the public, you must clearly indicate that the information is ''confidential.'' You must provide the

confidential location information on a separate sheet from the other Tier II information (which will be disclosed to the public), and attach the Confidential Location Information Sheet to the other Tier II information. Indicate any attachments you are including.

4. Section 370.43 is revised as follows:

§ 370.43 What codes are used to report Tier I and Tier II inventory information?

(a) Except as provided in paragraph (d) of this section, you must use the following codes to report the maximum amount and average daily amount when reporting Tier I or Tier II inventory information:

Range codes	Weight range in pounds	
	From	To
01	0	99.
02	100	499.
03	500	999.
04	1,000	4,999.
05	5,000	9,999.
06	10,000	24,999.
07	25,000	49,999.
08	50,000	74,999.
09	75,000	99,999.
10	100,000	499,999.
11	500,000	999,999.
12	1,000,000	9,999,999.
13	10,000,000	Greater than 10 million.

Note to paragraph (a): To convert gas or liquid volume to weight in pounds, multiply by an appropriate density factor.

(b) Your SERC or LEPC may provide other range codes for reporting maximum amount and average daily amount, or may require reporting of specific amounts. You may use your SERC's or LEPC's range codes (or specific amounts) provided the ranges are not broader than the ranges in paragraph (a) of this section.

[FR Doc. 2011–19900 Filed 8–5–11; 8:45 am]

BILLING CODE 6560–50–P

DEPARTMENT OF HOMELAND SECURITY

Coast Guard

46 CFR Parts 1, 10, 11, 12, 13, 14

[Docket No. USCG–2004–17914]

RIN 1625–AA16

Implementation of the Amendments to the International Convention on Standards of Training, Certification and Watchkeeping for Seafarers, 1978, and Changes to Domestic Endorsements

AGENCY: Coast Guard, DHS.

ACTION: Notice of public meetings; request for comments; Correction.

SUMMARY: On August 2, 2011 (76 FR 46217), the Coast Guard published a notice of public meetings and request for comments on a supplemental notice of proposed rulemaking (SNPRM) entitled ''Implementation of the Amendments to the International Convention on Standards of Training, Certification and Watchkeeping for Seafarers, 1978, and Changes to Domestic Endorsements.'' The incorrect publication date of the SNPRM was cited. This notice corrects that error.

FOR FURTHER INFORMATION CONTACT: Mr. Rogers Henderson, Maritime Personnel Qualification Division, U.S. Coast Guard, telephone 202–372–1408, e-mail *Rogers.W.Henderson@uscg.mil.* If you have questions on viewing or submitting material to the docket, call Ms. Renee V. Wright, Program Manager, Docket Operations, telephone 202–366–9826.

SUPPLEMENTARY INFORMATION: On August 2, 2011 (76 FR 46217), the Coast Guard published a notice of public meetings and request for comments on a supplemental notice of proposed rulemaking (SNPRM) entitled ''Implementation of the Amendments to the International Convention on Standards of Training, Certification and Watchkeeping for Seafarers, 1978, and Changes to Domestic Endorsements.'' Subsequent to the publication of that notice, the Coast Guard discovered that the publication date of the SNPRM on page 46217 was incorrect.

Correction

In the notice (FR Doc. 2011–19459) published on August 2, 2011 (76 FR 46217) make the following correction. On page 46217, in the first sentence of the second paragraph in the third column, the date should read ''August 1, 2011'' instead of ''August 1, 2001.''

Dated: August 2, 2011.

Erin Ledford,

LCDR, Deputy, Office of Regulations and Administrative Law.

[FR Doc. 2011–19985 Filed 8–5–11; 8:45 am]

BILLING CODE 9110–04–P

DEPARTMENT OF TRANSPORTATION

National Highway Traffic Safety Administration

49 CFR Part 580

[Docket No. NHTSA–2011–0109; Notice 1]

Petition for Approval of Alternate; Odometer Disclosure Requirements

AGENCY: National Highway Traffic Safety Administration (NHTSA), DOT.

ACTION: Notice of initial determination.

SUMMARY: The State of Florida has petitioned for approval of alternate odometer requirements to certain requirements under Federal odometer law. NHTSA preliminarily grants Florida's petition regarding proposed alternate disclosure requirements for vehicle transfers involving casual or private sales. NHTSA preliminarily denies Florida's petition regarding proposed alternate disclosure requirements for sales involving licensed dealers. NHTSA preliminarily denies Florida's petition regarding proposed alternate disclosure requirements for sales of leased vehicles.

DATES: Comments are due no later than September 7, 2011.

ADDRESSES: You may submit comments [identified by DOT Docket ID Number NHTSA–2010–####] by any of the following methods:

- *Federal eRulemaking Portal:* Go to *http://www.regulations.gov.* Follow the online instructions for submitting comments.
- *Mail:* Docket Management Facility: U.S. Department of Transportation, 1200 New Jersey Avenue, SE., West Building Ground Floor, Room W12–140, Washington, DC 20590–0001.
- *Hand Delivery or Courier:* West Building Ground Floor, Room W12–140, 1200 New Jersey Avenue, SE., between 9 a.m. and 5 p.m. E.T., Monday through Friday, except Federal holidays.
- *Fax:* 202–493–2251.

Instructions: For detailed instructions on submitting comments and additional information on the rulemaking process, see the Public Participation heading of the **SUPPLEMENTARY INFORMATION** section of this document. Note that all comments received will be posted

without change to *http://www.regulations.gov,* including any personal information provided. Please see the Privacy Act heading below.

Privacy Act: Anyone is able to search the electronic form of all comments received into any of our dockets by the name of the individual submitting the comment (or signing the comment, if submitted on behalf of an association, business, labor union, *etc.*). You may review DOT's complete Privacy Act Statement in the **Federal Register** published on April 11, 2000 (65 FR 19477–78) or you may visit *http://DocketInfo.dot.gov.*

Docket: For access to the docket to read background documents or comments received, go to *http://www.regulations.gov* or the street address listed above. Follow the online instructions for accessing the dockets.

FOR FURTHER INFORMATION CONTACT: Otto Matheke, Office of the Chief Counsel, National Highway Traffic Safety Administration, 1200 New Jersey Avenue, SE., West Building W41–227, Washington, DC 20590 (*Telephone:* 202–366–5263) (*Fax:* 202–366–3820).

SUPPLEMENTARY INFORMATION:

I. Introduction

Federal odometer law, which is largely based on the Motor Vehicle Information and Cost Savings Act (Cost Savings Act) [1] and Truth in Mileage Act of 1986, as amended (TIMA),[2] contains a number of provisions to limit odometer fraud and assure that the buyer of a motor vehicle knows the true mileage of the vehicle. The Cost Savings Act requires the Secretary of Transportation to promulgate regulations requiring the transferor (seller) of a motor vehicle to provide a written statement of the vehicle's mileage registered on the odometer to the transferee (buyer) in connection with the transfer of ownership. This written statement is generally referred to as the odometer disclosure statement. Further, under TIMA, vehicle titles themselves must have a space for the odometer disclosure statement and States are prohibited from licensing vehicles unless a valid odometer disclosure statement on the title is signed and dated by the transferor. Titles must also be printed by a secure process. With respect to leased vehicles, TIMA provides that the regulations promulgated by the Secretary require written mileage disclosures be made by lessees to lessors upon the lessor's transfer of the ownership of the leased vehicle. Lessors must also provide written notice to lessees about odometer disclosure requirements and the penalties for not complying with them. Federal law also contains document retention requirements for odometer disclosure statements.

TIMA's motor vehicle mileage disclosure requirements apply in a State unless the State has alternate requirements approved by the Secretary. The Secretary has delegated administration of the odometer program to NHTSA. Therefore, a State may petition NHTSA for approval of such alternate odometer disclosure requirements.

Seeking to implement an electronic vehicle title transfer system, the State of Florida has petitioned for approval of alternate odometer disclosure requirements. In 2009, NHTSA reviewed certain requirements for alternative state programs and approved the Commonwealth of Virginia's alternate odometer disclosure program. 74 FR 643, 650 (January 7, 2009). Florida's program is similar to Virginia's program in some respects and appears broader in scope than Virginia's in others. Like Virginia's program, the scope of Florida's proposed program does not include transactions involving an out-of-state party. Unlike Virginia's program, Florida's proposed program encompasses transactions involving leased vehicles and odometer disclosures by power of attorney. In addition, Florida's proposed program would use different mechanisms to document mileage than Virginia's.

As discussed below, NHTSA's initial assessment is that the portions of Florida's proposed program involving private sales satisfy the requirements for approval under Federal odometer law, while other portions involving transfers between individual owners and dealers, transfers of leased vehicles and transfers in which a power of attorney is used for purposes of mileage disclosure, do not.

II. Statutory Background

NHTSA recently reviewed the statutory background of Federal odometer law in its consideration and approval of Virginia's petition for alternate odometer disclosure requirements. *See* 73 FR 35617 (June 24, 2008) and 74 FR 643 (January 7, 2009). The statutory background of the Cost Savings Act and TIMA and the purposes behind TIMA, as they relate to odometer disclosure, other than in the transfer of leased vehicles and vehicles subject to liens where a power of attorney is used in the disclosure, are discussed at length in NHTSA's Final Determination granting Virginia's petition. 74 FR 643, 647–48. A brief summary of the statutory background of Federal odometer law and the purposes of TIMA, including odometer disclosure requirements for leased vehicles, follows.

In 1972, Congress enacted the Cost Savings Act, among other things, to prohibit tampering with odometers on motor vehicles and to establish certain safeguards for the protection of buyers with respect to the sale of motor vehicles having altered or reset odometers. *See* Public Law 92–513, § 401, 86 Stat. 947, 961–63 (1972). The Cost Savings Act required that, under regulations to be published by the Secretary, the transferor of a motor vehicle provide a written vehicle mileage disclosure to the transferee, prohibited odometer tampering and provided for enforcement. *See id,* § 408.[3] In general, the purpose for the disclosure was to assist buyers to know the true mileage of a motor vehicle.

A major shortcoming of the odometer provisions of the Cost Savings Act was their failure to require that the odometer disclosure statement be on the vehicle's title. In a number of States, the disclosures were on separate documents that could be easily altered or discarded and did not travel with the title. *See* 74 FR 644. Consequently, the disclosure statements did not necessarily deter odometer fraud employing altered documents, discarded titles, and title washing. *Id.*

Another significant shortcoming involved leased vehicles. The lessor is considered the transferor of the vehicle in leased vehicle sales. Titles to leased vehicles are often transferred without the lessor obtaining possession of the vehicle. Lessors without direct access to their vehicles had to rely solely on their lessees to provide actual mileage information. However, lessees had no obligation to provide actual mileage information to lessors upon vehicle transfer. This environment facilitated roll backs of odometers.

[1] Public Law 92–513, 86 Stat. 947, 961 (1972).

[2] Public Law 99–579, 100 Stat. 3309 (1986).

[3] Section 408 stated:

(a) Not later than 90 days after the date of enactment of this Act, the Secretary shall prescribe rules requiring any transferor to give the following written disclosure to the transferee in connection with the transfer of ownership of a motor vehicle:

(1) Disclosure of the cumulative mileage registered on the odometer.

(2) Disclosure that the actual mileage is unknown, if the odometer reading is known to the transferor to be different from the number of miles the vehicle has actually traveled.

Such rules shall prescribe the manner in which information shall be disclosed under this section and in which such information shall be retained.

(b) It shall be a violation of this section for any transferor to violate any rules under this section or to knowingly give a false statement to a transferee in making any disclosure required by such rules.

Congress enacted TIMA in 1986 to address the Cost Savings Act's shortcomings. It amended the Cost Savings Act by adding section 408(d) to prohibit States from licensing vehicles unless the new owner (transferee) submitted a title from the seller (transferor) containing the seller's signed and dated vehicle mileage statement. *See* Public Law 99–579, 100 Stat. 3309 (1986); 74 FR 644 (Jan. 7, 2009). TIMA also prohibits the licensing of vehicles, for use in any State, unless the title issued to the transferee is printed using a secure printing process or other secure process, indicates the vehicle mileage at the time of transfer and contains additional space for a subsequent mileage disclosure by the transferee when it is sold again. *Id.*

TIMA also added section 408(e) to the Cost Savings Act to require the Secretary to issue regulations regarding odometer disclosures for leased vehicles.[4] The regulations promulgated by the Secretary were to require written mileage disclosures by lessees to lessors upon the lessor's transfer of the ownership of the leased vehicle. Lessors must also provide written notice to lessees about the odometer disclosure requirements and the penalties for not complying with them. Federal law also contains document retention requirements for odometer disclosure statements. TIMA required lessors to retain disclosures made by lessees for at least four years following the date that the lessor transfers that vehicle.[5] *Id.*

TIMA added a provision to the Cost Savings Act allowing States to have alternate odometer disclosure requirements with the approval of the Secretary of Transportation. Section 408(f) of the Cost Savings Act states that the odometer disclosure requirements of subsections (d) and (e)(1) shall apply in a State unless the State has in effect alternate motor vehicle mileage disclosure requirements approved by the Secretary. Section 408(f)(2) further states that the Secretary shall approve alternate motor vehicle mileage disclosure requirements submitted by a State unless the Secretary determines that such requirements are not consistent with the purpose of the disclosure required by subsection (d) or (e), as the case may be.

In 1988, Congress amended section 408(d)(1) of the Cost Savings Act to permit the use of a secure power of attorney for purposes of odometer mileage disclosure in circumstances where the title was held by a lienholder, if allowed by state law. Public Law 100–561 § 40, 102 Stat. 2805, 2817 (1988). Congress required NHTSA to issue a rule ensuring that disclosures be made on the power of attorney document of the actual mileage at the time of transfer and that the mileage be restated exactly by the person exercising power of attorney on the title in the space therefor. *Id.* The rule, consistent with the purposes of the Act and the need to facilitate enforcement thereof, was to prescribe that the power of attorney form be issued by the State to the transferee using a secure process, as provided for titles, and provide for retention of a copy with the original submitted back to the State. *Id.* In 1989, NHTSA implemented the 1988 statutory amendments by promulgating amendments to the odometer disclosure regulations, providing that a transferor may give a secure power of attorney to a transferee for the purpose of mileage disclosure in two circumstances—when the transferor's title is physically held by a lienholder or when the title is lost. In either instance, use of a power of attorney document for mileage disclosure is permissible only if otherwise permitted by State law.[6]

In 1990, Congress again amended section 408(d) of the Cost Savings Act.[7] The amendment provided that the rule adopted under the 1988 amendment not require that a vehicle be titled in the State in which the power of attorney was issued and addressed retention of powers of attorneys by States. *See* Public Law 101–641 § 7(a), 104 Stat. 4654, 4657 (1990).[8]

In 1994, in the course of the recodification of various laws pertaining to the Department of Transportation, the Cost Savings Act, as amended, was repealed, reenacted and recodified without substantive change. *See* Public Law 103–272, 108 Stat. 745, 1048–1056, 1379, 1387 (1994). The odometer statute is now codified at 49 U.S.C. 32701 *et seq.* In particular, Section 408(a) of the Cost Savings Act was recodified at 49 U.S.C. 32705(a). Sections 408(d) and (e), which were added by TIMA (and later amended), were recodified at 49 U.S.C. 32705(b) and (c). The provisions pertaining to approval of State alternate motor vehicle mileage disclosure requirements were recodified at 49 U.S.C. 32705(d).

III. Statutory Purposes

As discussed above, the Cost Savings Act, as amended by TIMA in 1986, states that NHTSA ''shall approve alternate motor vehicle mileage disclosure requirements submitted by a State unless the [NHTSA] determines that such requirements are not consistent with the purpose of the disclosure required by subsection (d) or (e) as the case may be.'' (Subsections 408(d), (e) of the Cost Savings Act were recodified to 49 U.S.C. 32705(b) and (c)). In light of this provision, we now turn to our interpretation of the purposes of these subsections, as germane to Florida's petition.[9]

Our Final Determination granting Virginia's petition for alternate odometer disclosure requirements identified the purposes of TIMA germane to petitions for approval of odometer disclosure requirements that did not include disclosures involving reassignment documents, leased vehicles, or disclosures by power of attorney.[10] 74 FR 643, 647–48 (January

[4] TIMA amended the Cost Savings Act to add section 408(e):

(e)(1) In the case of any leased motor vehicle, the rules under subsection (a) shall require written disclosure regarding mileage to be made by the lessee to the lessor upon the lessor's transfer of ownership of the leased motor vehicle.

(2) Under such rules, the lessor of a leased motor vehicle shall provide written notice to the lessee regarding

(A) Such mileage disclosure requirements, and

(B) The penalties for failure to comply with them.

(3) The lessor shall retain the disclosure made by any lessee with respect to any motor vehicle under paragraph (1) For a period of at least 4 years following the date the lessor transfers that vehicle.

(4) For purposes of this section, if the lessor transfers ownership of any leased motor vehicle without obtaining possession of such vehicle, the lessor may, in making the disclosure required by subsection (a), Indicate on the title the mileage disclosed by the lessee under paragraph (1) Unless the lessor has reason to believe that such disclosure by the lessee does not reflect the actual mileage of the vehicle.

[5] Regulations implementing TIMA were published on August 5, 1988. 53 FR 29864. Federal regulations require lessors to retain odometer disclosure statements received from lessees for a period of five years. 49 CFR 580.8(b).

[6] Regulations implementing the amendment were published on August 30, 1989. 54 FR 35879. The regulations addressed numerous aspects of disclosure by power of attorney, including the form, certification by the person exercising the power of attorney, and access of the transferee to prior title and power of attorney documents.

[7] Section 7(a) of Public Law 101–641 directed that the third sentence of subsection (d)(2)(C) be amended. However, there was no subsection (d)(2)(C) in section 408. The amendment was restated as amending the third sentence of subsection (d)(1)(C) as the probable intent of Congress. This amendment is currently codified at 49 U.S.C. 32705(b)(2)(A).

[8] Regulations implementing this amendment were published on September 20, 1991. 56 FR 47681.

[9] Florida petitioned NHTSA requesting approval of alternate odometer disclosure requirements. Florida's initial petition, dated December 21, 2009, set forth Florida's initial request. Florida submitted a second, supplemental petition to NHTSA on October 5, 2010, that restated Florida's request in greater detail and provided more specific information on Florida's current e-Title and odometer disclosure program and its proposed program. Together, the petitions are identified herein as ''petition'' or ''the petition.''

[10] Since Virginia's program did not cover disclosures involving leased vehicles or disclosures by power of attorney, the purposes of Sections

Continued

7, 2009). In addition, because the Florida proposal encompasses reassignment documents, transfers of leased vehicles, and disclosures by power of attorney, we identify the purposes of TIMA relevant to odometer disclosures for leased vehicles (see Initial Determination on Wisconsin's petition for alternate odometer disclosure requirements, 75 FR 20965, 20972–73 (Apr. 22, 2010)) and purposes of allowing for disclosures by power of attorney in limited circumstances.

A. TIMA's Purposes Relevant to Vehicle Transfers in the Absence of a Lease Agreement

One purpose of TIMA is to assure that the form of the odometer disclosure precludes odometer fraud. 74 FR 647. To prevent odometer fraud facilitated by disclosure statements that were separate from titles, TIMA required mileage disclosures to be on a secure vehicle title instead of a separate document. These titles also had to contain space for the seller's attested mileage disclosure and a new disclosure by the buyer when the vehicle was sold again. This discouraged mileage alterations on titles and limited opportunities for obtaining new titles with lower mileage than the actual mileage. *Id.* This concern applies to reassignment documents.[11]

A second purpose of TIMA is to prevent odometer fraud by processes and mechanisms making odometer mileage disclosures on the title a condition of any application for a title, and a requirement for any title issued by a State. 74 FR 647. This provision was intended to eliminate or significantly reduce abuses associated with lack of control of the titling process. *Id.*

Third, TIMA sought to prevent alterations of disclosures on titles and to preclude counterfeit titles through secure processes. 74 FR 648. In furtherance of these purposes, paper titles (incorporating the disclosure statement) must be produced using a secure printing process or protected by ''other secure process.''[12] *Id.*

A fourth purpose is to create a record of vehicle mileage and a paper trail. 74 FR 648. The underlying purposes of this record and paper trail were to better inform consumers and provide mechanisms for tracing odometer tampering and prosecuting violators. TIMA's requirement that new applications for titles include signed mileage disclosure statements on the titles from the prior owners creates a permanent record that is easily checked by subsequent owners or law enforcement officials. This record provides critical snapshots of vehicle mileage at every transfer, which are the fundamental links of this paper trail.

Finally, the general purpose of TIMA is to protect consumers by assuring that they receive valid representations of the vehicle's actual mileage at the time of transfer based on odometer disclosures. 74 FR 648.

B. TIMA's Purposes Relevant to Leased Vehicles

TIMA recognized that additional mechanisms were needed to assure accurate odometer disclosures for leased vehicles. In vehicle leases, the lessor typically retains ownership of the vehicle, but does not possess it. The lessor, as a transferor, must comply with Federal odometer disclosure requirements when it subsequently transfers title to a leased vehicle. However, prior to TIMA, lessees were not obligated by Federal odometer law to provide lessors with accurate odometer disclosure statements. TIMA addressed this issue, as discussed above. A number of purposes can be derived from TIMA's provisions, discussed above, relating to the transfer of ownership of leased vehicles.

One purpose of TIMA's leased vehicle provisions is to assure that lessors have the vehicle's actual odometer mileage at the time of transfer.

A second purpose of TIMA's leased vehicle provisions is to assure that lessees provide lessors with an odometer disclosure statement.

A related purpose is to assure that lessees are formally notified of their odometer disclosure obligations and the penalties for failing to comply by not providing complete and truthful information.

A fourth purpose is to set the ground rules for the lessors, providing for lessors to indicate the mileage provided by the lessee on the title, unless the lessor has reason to believe that the disclosure by the lessee does not reflect the actual mileage of the vehicle.

A fifth purpose of TIMA's leased vehicle provisions is to create records and a paper trail. This is an expansion of the fourth general purpose of TIMA stated above. The paper trail includes the written, dated and signed odometer disclosure statement by the lessee. Unlike odometer disclosure statements on vehicle titles that are filed with the State, a lessee's odometer disclosure statement is separate from the title and not filed with the State. Instead, the disclosure statement is sent to the lessor, who must retain a copy for at least five years. The retention of lessee odometer disclosure statements by lessors permits law enforcement officials to trace fraudulent disclosure statements back to lessees, if necessary.

Last, the overall purpose of TIMA's leased vehicle provisions, consistent with the general purposes of TIMA, is to ensure that there are valid representations of the vehicle's actual mileage at the time of transfer. *See* H.R. Rep. No. 99–833, at 33 (1986).

C. Mileage Disclosures by Power of Attorney

NHTSA's rule implementing TIMA provided that ''[n]o person shall sign an odometer disclosure statement as both the transferor and the transferee in the same transaction.''[13] In general, this provision, which was intended to limit fraud, was not questioned. However, in instances when a lienholder holds title to a vehicle being sold this, as a practical matter, presented a considerable regulatory burden, because when a dealer bought a used vehicle, it would be required to go to the lienholder and obtain the title, and then go back to the seller so that the seller could record the mileage on the title. The last step often was difficult and could be avoided if the seller executes a power of attorney to the buyer authorizing the buyer to record the mileage upon receipt of the title.[14]

In 1988, Congress amended TIMA to provide for the limited use of powers of attorney for recording mileage, when the title is physically held by a lienholder at the time of the transfer and is authorized by State law. See Pipeline Safety Reauthorization Act of 1988 (PSRA) § 401, 15 U.S.C. 1988(d)(1) (1988). (Section 401 of the PSRA, as amended in 1990 (see below), was recodified at 49 U.S.C. 32705(b)(2)(A).) The amendment required NHTSA to issue a rule. The rule, which was to address the form and reasonable

408(d)(2)(C) and 408(e) of the Cost Savings Act, as amended, were not germane and were not addressed in the notice approving the Virginia program. *See* 74 FR 647 n. 12.

[11] NHTSA amended 49 CFR 580.5(c) to preclude use of a separate reassignment form at the time of the first transfer, by a titled owner. *See* 56 FR 47684–85 (Sep. 20, 1991).

[12] Congress intended to encourage new technologies by including the language ''other secure process.'' The House Report accompanying TIMA noted that '' 'other secure process' is intended to describe means other than printing which could securely provide for the storage and transmittal of title and mileage information.'' H.R. Rep. No. 99–833, at 33 (1986). ''In adopting this language, the Committee intends to encourage new technologies which will provide increased levels of security for titles.'' *Id. See also* Cost Savings Act, as amended by TIMA, § 408(d), recodified at 49 U.S.C. 32705(b).

[13] 49 CFR 580.5(h); 53 FR 29464, 29477 (Aug. 5, 1988).

[14] *See* 134 Cong. Rec. H10079 (daily ed. Oct. 12, 1988).

conditions of the limited power of attorney, was to ensure disclosure on the power of attorney document of the actual mileage at the time of transfer and ensure that such mileage will be restated exactly by the person exercising the power of attorney in the space referred to in TIMA. Further, consistent with the purposes of the Cost Savings Act as amended and the need to facilitate enforcement thereof, the rule was to prescribe the form of the power of attorney to be issued by the State to the transferee and for retention of a copy of such power of attorney. As amended in 1990, this statutory provision provided that the rule promulgated by NHTSA must require the person granted the power of attorney to retain a copy of the power of attorney form and submit the original form to the State along with a copy of the title showing the restatement of the mileage. The statute also permitted the agency to prescribe that the State retain the power of attorney and copy of the title for an appropriate period or that the State adopt alternative measures consistent with the purposes of the statute. The statute mandated that the rule not require that a vehicle be titled in the State in which the power of attorney was issued. Public Law 101–641, 104 Stat. 4654, 57 (Nov. 28, 1990).

In 1989, NHTSA implemented the PSRA by promulgating amendments to the odometer disclosure regulations.[15] The rule provides that a transferor may give a secure power of attorney to a transferee for the purpose of mileage disclosure in two circumstances—when the transferor's title is physically held by a lienholder or when the title is lost.[16] In either instance, use of a power of attorney document for mileage disclosure is permissible only if otherwise permitted by State law. In this rule, NHTSA narrowly amended its earlier rule prohibiting any party from signing an odometer disclosure statement as both the transferor and transferee in the same transaction to add an exception. The amendment allowed the same person to so sign the odometer disclosure statement if he or she satisfied the detailed, specific provisions on powers of attorney added to the regulations in 49 CFR 580.13 or 14. These provisions state the form and conditions of the power of attorney. Also, the power of attorney document must be issued by the State and be set forth by a secure process.[17] While providing for powers of attorney, NHTSA expressed concern that powers of attorney that allow a person to sign a disclosure as both the transferor and transferee result in only one party to the transaction being aware of the previous mileage disclosures, which could jeopardize the integrity of the paper trail—the evidence of rollbacks that Congress intended to enhance by enacting TIMA.[18]

A number of purposes can be derived from the statute directing NHTSA to issue a rule and the implementing rule.

One purpose was to provide limited exception(s) to a rule prohibiting a person from signing an odometer disclosure statement as both the transferor and transferee in the same transaction, which had the effect of prohibiting the use of powers of attorney for purposes of recording mileage on titles of motor vehicles.[19] More particularly, a purpose was to permit a power of attorney for disclosure of the odometer reading at the time of sale of a vehicle to be given by the seller to the buyer, in the limited situation when the owner's title is physically held by a lienholder at the time of the transaction and the power of attorney is allowed by State law.[20] Another limited situation in which a power of attorney may be used, as recognized in the implementing regulation, is where the title is not present because it has been lost by the person to whom it was issued by the State, if permitted by State law.[21] In order for a power of attorney to be used in the lost title situation, the transferee (*e.g.,* the dealer) must apply for the duplicate title on behalf of the transferor. Under these circumstances, a power of attorney is available to facilitate consumer vehicle sales transactions, but is not available in other than consumer sales transactions, where the risk of fraud is considerably greater.[22]

A second purpose was to assure that the form of the power of attorney document issued by a State precluded odometer fraud. While under the limited circumstances discussed above and if allowed under State law, with use of a power of attorney one person may sign the odometer disclosure on the title as both the transferor and transferee, to limit fraud, the power of attorney form must meet certain minimum requirements.[23] Congress specified that NHTSA would prescribe a form by rule. Under the rule, the form must be separated into part A, and if permitted by State law, B and C.[24]

The transferor's power of attorney to the transferee for mileage disclosure must be on part A of a secure form issued by the State to the transferee.[25] Using this form, the transferor appoints the transferee his/her attorney-in-fact for the purpose of mileage disclosure. The form provides for written disclosure by the transferor to the transferee of the information that is stated on a vehicle title under 49 CFR 580.5 when ownership of the vehicle is transferred.[26] Among other things, there must be a space in part A for the transferor and transferee to sign the power of attorney form and print their names and a space for the transferor to disclose the mileage. Part A must also contain a reference to the Federal odometer law and state that providing false information or the failure of the person granted the power of attorney to submit the form to the State may result in fines and/or imprisonment. The disclosure on part A of the power of attorney form is commonly made by the

[15] NHTSA issued an interim final rule on March 8, 1989 (54 FR 9809) and a final rule on August 30, 1989 (54 FR 35879).

[16] 54 FR 35879 (Aug. 30, 1989).

[17] See 49 CFR 580.4.

[18] 54 FR 9809, 9810 (March 8, 1989). As is self evident, ordinarily such a practice provides opportunities for fraud. See 54 FR 9812; 54 FR 35882.

[19] As Congressman Whittaker noted, ''we have drafted the amendment in a very narrow fashion.'' 134 Cong. Rec. H10079 (daily ed. Oct. 12, 1988).

[20] This does not include the practice of floor planning. Floor planning is a practice by which a financial institution will physically hold a title as security for financing, without formally filing or recording a security interest, on a vehicle offered for sale by a dealer. 54 FR 35885–35886. This also does not include a situation in which the lending institution that financed the vehicle's purchase is located in a state that requires the lienholder to hold the title as security, but the vehicle is registered in a different state, which allows the owner, rather than the lienholder to hold the title. Under the 1991 amendment to the Cost Savings Act, NHTSA considers the creation of another category of exempted transferors inappropriate.

[21] 49 CFR 580.13, 54 FR 35883.

[22] The 1988 amendments did not modify the TIMA provisions relating to leased vehicles.

[23] Among these are the requirements of NHTSA's rule, 49 CFR 580.13 and 580.14.

[24] 49 CFR 580.13; *see* 54 FR 9812.

[25] 49 CFR 580.13; *see* 54 FR 9812.

[26] 49 CFR 580.13 requires the form to contain, in part A, a space for: (1) The odometer reading at the time of transfer; (2) the date of transfer; (3) the transferor's name and current address; (4) the transferee's name and current address; and (5) the vehicle make, model, year, body type, and vehicle identification number (VIN). Part A shall also contain a space for the transferor to certify that to the best of his knowledge either: (1) The odometer reading reflects the actual mileage; or (2) if the transferor knows that the odometer reading reflects mileage in excess of the designed mechanical odometer limit, he shall include a statement to that effect; or (3) if the transferor knows that the odometer reading differs from the mileage and the difference is greater than that caused by a calibration error, he shall include a statement that the odometer reading does not reflect the actual mileage and should not be relied upon with a warning notice to alert the transferee that a discrepancy exists between the odometer reading and the actual mileage.

seller when he or she trades-in a vehicle at a dealer.

After part A of the power of attorney form has been used, part B may be executed when a vehicle addressed on part A is resold.[27] Part B of the secure power of attorney form, if permitted by State law, allows a subsequent transferee to give a power of attorney to his transferor to review the title and any reassignment documents for mileage discrepancies, and if no discrepancies are found, to acknowledge disclosure on the title, while maintaining the integrity of the first seller's disclosure. The disclosure required to be made by the transferor to the transferee for this transaction on part B of the power of attorney form tracks information required to be made by the transferor to the transferee on the title when ownership of a vehicle is transferred on a title under 49 CFR 580.5.[28] Among other things, the power of attorney must contain a space for the transferor to disclose the mileage to the transferee and sign and date the form, and a space for the transferee to sign and date the form.

Commonly, part B is used in the sale of a trade-in vehicle by a dealer. If for example, a dealer does not have possession of the title, because the vehicle was a trade-in and the lienholder has not yet released the title, or because the title was lost and the dealer has not yet obtained a duplicate title on behalf of the transferor who sold the vehicle to the dealer, the subsequent buyer of the used vehicle (the transferee) is permitted to give a power of attorney to the transferor/selling dealer to acknowledge the mileage disclosure on their behalf. This power of attorney from the transferee to the transferor allows the transferor (who is the original seller's attorney in fact under Part A) to sign the title as both the transferor and transferee in the same transaction.[29] In addition, because the same person signs the title as the transferor and transferee, the appointment of the transferor as the transferee's attorney-in-fact must be made on part B of the same secure power of attorney form, issued by a State, upon which the transferor was appointed the attorney-in-fact by the original transferor on part A.[30] This form enables purchasers to examine the previously issued power of attorney for alterations, erasures, and other marks, and to learn the name of the prior owner without the additional cost of a title search. This is the same information that purchasers would receive if the title was not held by a lienholder since, under TIMA, the transferor is required to disclose mileage on the vehicle's title.

The secure power of attorney form with a part B must contain a certification in part C.[31] To ensure that a person exercising a power of attorney under both sections 580.13 and 580.14 (parts A and B) is fully aware of his/her obligation and their liability for any action that is inconsistent with the power of attorney, the rule (§ 580.15) requires the completion, on part C, of a certification attesting that the signer has disclosed the mileage on the title document consistent with the mileage disclosed on the power of attorney form. The signer of part C also attests that he or she has examined the title, and that the mileage disclosure made on the title executed under the power of attorney is greater than the mileage previously stated on the title and any reassignment form.[32]

The part C certification requirement need only apply to the subsequent sale situation (typically a trade-in) where the second purchaser's only link to the title will be the transferor (dealer). Thus, section 580.15 provides that the certification requirement applies only when the transferor is exercising a power of attorney for both the first sale and second sale customers, as provided for in sections 580.13 and 580.14. If the title is present at the time of the second sale, the purchaser will be able to review the title himself/herself to assure that the mileage is entered in accordance with the initial transferor's power of attorney and is higher than the mileage appearing on the title and reassignment documents.

Finally, the State itself must issue the power of attorney form.[33]

A third purpose was to set ground rules for transferors and transferees, providing that both parties provide all of the information and signatures required in parts A, and as applicable B, and C of the secure power of attorney form. This ensures that upon receipt of the first transferor's title, the transferee (typically a dealer) must complete the space for mileage disclosure on the title exactly as the mileage was disclosed by the first transferor on the power of attorney form.

A fourth purpose was to prevent odometer fraud by establishing processes, mechanisms and conditions calculated to result in the disclosure of the actual mileage on the title.[34] As provided in the PSRA of 1988, NHTSA's rule is to ensure that transferors disclose the actual mileage at the time of the transfer on the power of attorney document and that persons exercising the power of attorney restate that mileage exactly on the title in the space provided. Toward these ends, one condition, required by the implementing rule, is inclusion of the printed names and signatures of the first transferor and the first transferee (typically a dealer) accompanying the mileage disclosure, as well as a statement of liability for fines for false statements. The transferor shall also certify on the power of attorney form that to the best of the transferor's knowledge, either: (1) The odometer reading reflects the actual mileage; or (2) if the transferor knows that the odometer reading reflects mileage in excess of the designed odometer limit, he shall include a statement to that effect; or (3) if the transferor knows that the odometer reading differs from the mileage and the difference is greater than that caused by a calibration error, he shall include a statement that the odometer reading does not reflect the actual mileage and should not be relied upon, and a warning notice to alert the transferee that a discrepancy exists

[27] 49 CFR 580.14.

[28] 49 CFR 580.14 requires part B of the form to contain a space for the mileage disclosure from the transferor to the transferee, and contain space for the following information: (1) The odometer reading at the time of the transfer; (2) the date of the transfer; (3) the transferor's name and current address; (4) the transferee's name and current address; and (5) the vehicle make, model year, body type, and VIN. Part B shall also contain a reference to the Federal odometer law and state that providing false information or the failure of the person granted the power of attorney to submit the form to the State may result in fines and/or imprisonment. Part B shall also contain a space for the transferor to certify that to the best of his knowledge either: (1) The odometer reading reflects the actual mileage; or (2) if the transferor knows that the odometer reading reflects mileage in excess of the designed mechanical odometer limit, he shall include a statement to that effect; or (3) if the transferor knows that the odometer reading differs from the mileage and the difference is greater than that caused by a calibration error, he shall include a statement that the odometer reading does not reflect the actual mileage and should not be relied upon, with a warning notice to alert the transferee that a discrepancy exists between the odometer reading and the actual mileage.

[29] 49 CFR 580.14.

[30] This is done pursuant to 49 CFR 580.13.

[31] The part C certification shall include space for: (1) The signature and printed name of the person exercising the power of attorney; (2) the address of the person exercising the power of attorney; and (3) the date of the certification.

[32] As a practical matter, the mileage entered by the dealer could never be lower than the mileage already on the title, since if the power of attorney set forth a lower mileage, it would void the power of attorney as discussed above, and the dealer would not be authorized to sign the disclosure on behalf of the transferor.

[33] 54 FR 9812.

[34] Of course, other purposes of TIMA apply, including processes and mechanisms making the disclosure of an odometer's mileage on the title a condition of the application for a title and a requirement for the title issued by the state.

between the odometer reading and the actual mileage.

There are additional mechanisms employed in the power of attorney regulations to ensure accurate disclosures of the odometer reading and to limit fraud. As provided in the rule, upon receipt of the first transferor's title, the transferee has a duty to complete the space for mileage disclosure on the title exactly as the mileage was disclosed by the first transferor on the power of attorney form.[35] Further, the certification provision discussed above provides a mechanism applicable to the second sale. As provided by section 580.15, the person completing part C of the secure power of attorney form issued by the State certifies that he or she has disclosed the mileage on the title document consistent with the mileage disclosed to him or her on the power of attorney form, that he or she examined the title and the mileage disclosure on that title and the mileage disclosure he or she is making on the power of attorney is greater than the mileage previously stated on the title.

In addition, the PSRA, as amended in 1990, provided another process to ensure accurate disclosure of the odometer reading. It required that the rule ensure that the person granted a power of attorney must submit the completed original power of attorney to the state along with a copy of the title (showing the restatement of mileage) and must also retain a copy. As directed, NHTSA issued implementing regulations providing that the transferee must submit the completed original power of attorney form to the State that issued it along with either a copy or the actual transferor's title when submitting a new title application. This allowed for review of the mileage on the power of attorney form and corresponding title.

NHTSA's regulations provide an additional mechanism facilitating verification of previous mileage statements by affording subsequent purchasers access to previous title and power of attorney documents. Under section 580.16(a), if the second-sale transferee applies for title in his own name (in other words, if the second-sale transferee does not give power of attorney to his transferor to review the title and reassignment documents), then that transferor must show him, upon his request, a copy of the power of attorney form completed by the previous owner. In any event, under section 580.16(b) of the rule, a transferor who was given power of attorney by his transferor and who holds title to the vehicle in his name, must, upon request of the purchaser (second-sale transferee), show his/her purchaser a copy of the previous owner's title and a copy of the power of attorney form completed by the previous owner.

A further mechanism in the rule was its voiding mechanism. As provided by the rule, 49 CFR 580.15(b), any mileage discrepancies void the power of attorney. NHTSA has characterized this provision as vital;[36] if the mileage reflected by the transferor on the power of attorney is less than that previously stated on the title and any reassignment documents, the power of attorney shall be void. The power of attorney is voided by the existence of a discrepancy, not by an action causing a discrepancy.

A fifth purpose is to prevent alterations on odometer disclosures by powers of attorney and to preclude counterfeit powers of attorney through secure processes. In furtherance of these purposes, the power of attorney (incorporating the disclosure statement) must be on a form issued by the State that is set forth by means of a secure printing process or other secure process. It has to be no less secure than the title document itself.

A sixth purpose is to create a record of the mileage on vehicles and a paper trail. The PSRA referred to the need to facilitate enforcement. In addition, and more specifically, the amended statute provided ''the person granted such power of attorney * * * shall submit the original back to the State with a copy of the title showing a restatement of the mileage.''[37] This paper trail includes the written, signed (by both the transferor and transferee), and dated odometer disclosure statement on the secure power of attorney form, and the corresponding entry on the vehicle title, which, as discussed above, must read exactly as it was disclosed by the transferor on the power of attorney document. The transferee is required to file the original power of attorney form with the State that issued it, with a copy of the transferor's title or with the actual title when the transferee submits a new title application at the same time. The transferee is required to return a copy of the power of attorney form to the transferor. The State shall retain the original power of attorney form for the shorter of (a) Three years or (b) a period equal to the State titling record retention period. As stated in the rulemaking, the State may retain the copy in any medium by which such information may be stored, provided there is no loss of information. States are not limited to retaining the records in paper form.

The retention of the power of attorney form by the State permits law enforcement officials to trace fraudulent disclosure statements back to transferors, if necessary.

Moreover, Section 401 of the PSRA, as amended in 1991, requires NHTSA's rules to provide for the retention of the power of attorney form. The rule added section 580.8(c), which concerns odometer disclosure statement retention. Under this paragraph, motor vehicle dealers and distributors who are assigned a power of attorney by their transferors are required to retain, for five years, a copy of each power of attorney they receive. These documents must be retained at the primary place of business of the dealer or distributor in an order that is appropriate with business requirements and that permits systematic retrieval.

Seventh, the overall purpose is to protect consumers by assuring that they receive valid representations of a vehicle's actual mileage at a time of transfer. This includes the ground rules for transferors and transferees, providing that both parties provide all of the information and signatures required in parts A, B, and C of the secure power of attorney form. This ensures that upon receipt of the transferor's title, the transferee shall complete the space for mileage disclosure on the title exactly as the mileage was disclosed by the transferor on the power of attorney form.

IV. The Florida Petition

Florida, which is in the process of implementing an electronic title transfer system (e-title), petitions for approval of alternate odometer disclosure requirements.[38] Florida requests alternate disclosure requirements for transfers of motor vehicles in transactions between private parties (casual sales) and transfers of motor vehicles, whether subject to a lien[39] or

[35] 49 CFR 580.13(f).

[36] 54 FR 35885 (Aug. 30, 1989).

[37] The definition of ''original power of attorney'' permits a secure copy of the power of attorney to be considered an ''original.'' This is implemented in part in 40 CFR 580.13(f).

[38] We note that Florida's petition differs markedly from other petitions for alternate odometer disclosure requirements NHTSA has received from other states. Florida's proposal relies on tag agents, rather than an online system, to verify the identity of the transferor and transferee in casual sales. These tag agents also verify chain of ownership and odometer disclosure in all transfers before title can be issued. Identity verification in transactions other than casual sales (for which identity of the parties is verified by a tag agent) is left to the parties to the transaction(s). Florida's proposal encompasses a wide variety of transactions and relies on paper forms for a number of these transactions.

[39] Under Florida law, a lienholder physically possesses the title to the vehicle. Thus, Florida permits odometer disclosure by power of attorney

Continued

not subject to a lien, between private parties and motor vehicle dealers. Florida also requests alternate disclosure requirements for transactions involving leased vehicles.

Florida law authorizes the Florida Department of Highway Safety and Motor Vehicles (the Department) to accept any application for vehicle title by electronic means. *See Fla. Stat. Ann.* § 319.40 (1997). The Department is proposing amendments to the Florida statutes to allow the continuation of an electronic certificate of title in lieu of a paper certificate of title for transfers of motor vehicles. With electronic titling there would not be a paper certificate of title on which to disclose the vehicle's mileage at the time of transfer of ownership.

A. Overview of Florida's Electronic Titling System

Currently Florida stores its titling and registration information (including images of all supporting title documentation) in a secure database referred to as the Florida Real-time Vehicle Information System, or FRVIS. According to Florida's petition, either a Department employee or an authorized tag agent at a state-authorized tag office enters information into this database. Only a Department employee or tag agent can change FRVIS title information, including owner information and the odometer disclosure. For title images (scanned, electronic copies of vehicle title documents), FRVIS stores all applicable data and stores images of documents that remain in the title history for the vehicle. Florida law also requires that the Department retain all documents regarding applications for, and issuance of, certificates of title—including titles, manufacturers' statements of origin, applications, and supporting documents submitted with the application such as odometer statements, VIN verifications, bills of sale, indicia of ownership, dealer reassignments, photographs, and any personal identification, affidavits, or documents required by or submitted to the Department—for a period of at least 10 years. *Fla. Stat. Ann.* § 319.23(11). The title resides as an electronic record in FRVIS; however, secure paper copies of the title can be generated from FRVIS if needed.

Florida intends to use a secure reassignment form in lieu of a paper title to capture odometer disclosure and transfer of e-titles. Florida law currently allows licensed dealers to use a secure reassignment form when making dealer reassignments and odometer disclosures after all reassignment and odometer disclosure spaces on the reverse side of the Certificate of Title have been used. The form links the vehicle to the title record by the VIN and includes the required odometer disclosure statements. The Department scans the form and stores it in the title history for the vehicle. Florida proposes to use a similar form for odometer disclosure in its e-title program.

In Florida, lienholders hold the title to the vehicles securing the loan. Florida began its electronic title and lien (ELT) program in 2001. Under the current process, the Department contracts with vendors who provide secure electronic interface with Florida's titling system to participating lienholders. The vendors then contract with financial institutions who wish to participate in Florida's electronic title and lien program. The participating lienholders allow their titles to remain electronic. Electronic liens are satisfied through the secure electronic interface and the title is retained electronically until a paper copy is requested.[40]

B. Florida's Proposed e-Odometer Program

Florida's proposed e-Odometer program can be divided into three transaction types: (1) Casual or private sales; (2) sales involving licensed motor vehicle dealers (including sales from private owners to licensed dealers, sales between licensed dealers, and sales from licensed dealers to private buyers); and (3) sales involving leased vehicles. The Agency understands that the program, as proposed, applies only when the transferred vehicle is electronically titled at the time of transfer of the vehicle.

1. Casual or Private Sales

Currently, a Florida resident wishing to sell his/her vehicle in a casual or private sale needs to have a paper title. The seller signs the paper title and discloses the odometer reading to the buyer on the title. The buyer then signs the paper title verifying the odometer reading. (The odometer disclosure is made on the title and signed by the buyer and seller at the time of transfer, in accordance with 49 U.S.C. 32705 and 49 CFR 580.5.) The buyer takes the paper title to a tag office, which processes the transfer of ownership and prints a new paper title in the buyer's name, or, if the buyer so elects, creates an e-title to be held by the Department.[41] Whether the buyer elects to maintain the title electronically or in paper form, the tag office sends the old paper title and any other supporting documentation to the Department for scanning into FRVIS.

Under Florida's proposed e-title program,[42] if a seller of a vehicle has an electronic title and wants to transfer that title, the seller and buyer would visit an authorized tag office together. After providing adequate identification to the tag agent, the buyer and seller would sign, in the presence of the tag agent, a secure reassignment form transferring ownership and disclosing the odometer reading. A title is then issued in the buyer's name and is stored electronically, or the buyer may choose to have a paper title issued. The secure reassignment form and copies of the identification are scanned into the title record in FRVIS.[43] Florida maintains that these would travel with the title.

2. Sales Involving Licensed Motor Vehicle Dealers

a. Retail Sales of Vehicles With an e-Title But Not Subject to a Lien

Currently, when a licensed motor vehicle dealer is involved, the process for transferring a title to a vehicle with an e-title and not subject to a lien is as follows. The seller with e-title brings the vehicle to a dealership. The seller and dealer complete a secure power of attorney with odometer disclosure. The dealer obtains the paper title from a tag agency or online from the Department. The dealer transfers the odometer disclosure information from the secure power of attorney to the title and signs the title as buyer and seller. When the dealer sells the vehicle to another buyer, the dealer and buyer complete the reassignment on the paper title with an

when title is held by a lienholder and now petitions for alternate requirements regarding odometer disclosure by power of attorney.

[40] Approximately 24 percent of the more than ten million vehicle lien records Florida has are electronic. Additionally, almost 50 percent of all new transactions with liens are maintained electronically under ELT.

[41] The buyer can request a paper title from the tag agent and pay a $10 fee, or request a paper title online and pay a $2.50 fee. The fee is intended to encourage buyers to maintain vehicle title electronically. This fee applies to any paper title request under Florida's current system and under the State's proposed program.

[42] Florida's proposed program does not apply in a casual vehicle sale by a seller holding a paper title, only those with e-title. A seller holding a paper title must follow the current procedures to transfer the vehicle—the buyer and seller sign and make the required odometer disclosure on the back of the paper title. The buyer then can bring the signed title containing the required odometer disclosure statement to an authorized tag agent and elect at that time to have the title maintained by the State electronically. If the buyer elects e-Title and later sells the vehicle in a casual sale, he can do so by following the procedures for transferring e-title.

[43] The Agency understands that the electronic documents are linked to the vehicle title history by title number and VIN.

odometer disclosure. The dealer takes both the secure power of attorney and the paper title to a tag agency. The title is then transferred to the buyer and a receipt is provided. The buyer has the option to obtain a new paper title or have the Department hold the title electronically. The secure power of attorney and old paper title are scanned and stored with title history in FRVIS.

Under Florida's proposed program, a seller with e-title would bring the vehicle to a dealership. The seller and dealer complete a secure reassignment form with odometer disclosure. When the dealer sells the vehicle to another buyer, the dealer and buyer complete another secure reassignment form with odometer disclosure. The dealer takes both of the secure reassignment forms to a tag agency. The vehicle title is then transferred to the buyer and a receipt is provided. The buyer has the option to obtain a paper title or have the Department hold the title electronically. The secure reassignment forms are scanned and stored with the vehicle title history in FRVIS.

b. Sales of Vehicles With e-Title Subject to a Lien (e-lien in Florida)

Currently, when a licensed motor vehicle dealer is involved, the process for transferring a vehicle subject to an e-lien with e-title is as follows. A seller with e-title/e-lien brings the vehicle to a dealership. The seller and dealer complete a secure power of attorney with odometer disclosure. The dealer pays off the lien and the lienholder electronically releases the lien via a secure electronic interface with the Department (ELT). The dealer then obtains the paper title from a tag agency or online from the Department. The dealer transfers the odometer information from the secure power of attorney to the title and signs the title as buyer and seller. When the dealer sells the vehicle to another buyer, the dealer and buyer complete the reassignment on the title with odometer disclosure. The dealer takes both the secure power of attorney and the paper title to the tag agency. The vehicle title is transferred to the buyer and a receipt is provided. The buyer has the option to obtain a new paper title or have the Department hold the title electronically. The secure power of attorney and old paper title are scanned and stored with title history in FRVIS.

Under Florida's proposed program, a seller with e-title would bring the vehicle to a dealership. The seller and dealer complete a secure reassignment form with an odometer disclosure. The dealer pays off the lien and the lienholder electronically releases the lien via secure electronic interface with the Department (ELT). When the dealer sells the vehicle to another buyer, the dealer and buyer complete another secure reassignment form with an odometer disclosure. The dealer then takes both secure reassignment forms to a tag agency, where the title is transferred to the buyer and a receipt is provided. The buyer has the option to obtain a paper title or have the Department hold the title electronically. The secure reassignment forms are scanned and stored with the vehicle title history in FRVIS.

c. Dealer Reassignments

Florida currently does not allow for an e-title in the dealer reassignment process. A dealer must obtain a paper title prior to being able to resell the vehicle. Once there is a paper title, the dealer uses the current paper process. The dealer uses the back of the title to include reassignments, including odometer disclosure. Once this form is full (Florida allows for three reassignments on the title), the dealer will use a secure title reassignment supplement (HSMV 82994). This form also includes the required odometer disclosures. When a vehicle is ultimately sold to a customer, the paper title and all secure title reassignment supplements are provided to the tag agency and forwarded to the Department for scanning and storing in the title record.

For an e-title, the Department is proposing that the dealer use a secure reassignment supplement instead of having to obtain a paper title. Any subsequent reassignments would also use the secure reassignment supplement. When the vehicle is ultimately sold to a retail customer, all secure reassignment supplements would be provided to the tag agency for verification of the chain of ownership and verification of the odometer disclosure. All documents would be forwarded to the Department for scanning and storing in FRVIS.

3. Sales Involving Leased Vehicles

In the case of leased vehicles, the lessor typically retains ownership of the vehicle, but does not possess it. The lessor, as a transferor, must comply with the federal odometer disclosure requirements when it subsequently transfers title of a leased vehicle. As noted by Florida, Federal laws require written mileage disclosures be made by lessees to lessors upon the lessor's transfer of the ownership of the leased vehicle.

Currently, Florida's process for transferring leased vehicles is as follows. The lessor holds the vehicle's paper title. When the lease ends (for example, in a trade-in or buyout situation), the lessee brings the vehicle to a dealership. The lessee signs an odometer disclosure Statement. The lessor then transfers the odometer reading to the title. The lessor signs title over to the dealer (or other party) along with the odometer disclosure statement. When the dealer sells the vehicle to a buyer, the dealer and buyer complete the reassignment on the paper title with the odometer disclosure. The documents are then sent to an authorized tag agency, where the title is transferred to the buyer and a receipt is provided. The buyer has the option to obtain a new paper title or have the Department hold the title electronically. The old paper title and supporting documentation are scanned and stored with the vehicle title history in FRVIS.

Under Florida's proposal, the lessor holds an e-title. When the lease ends, the lessee would bring the vehicle to a dealership. The lessee signs an odometer disclosure statement. The lessor then signs a secure power of attorney to the dealer which includes the odometer disclosure. The dealer signs a secure reassignment form agreeing with the odometer disclosure. When the dealer sells the vehicle to another buyer, the dealer takes the documents (bill of sale, reassignment document, and power of attorney) to the tag agency, where the title is transferred to the buyer and a receipt is provided. The buyer has the option to obtain a new paper title or have the Department hold the vehicle title electronically. All documents are sent to Department and scanned into the vehicle title history in FRVIS.

C. Florida e-Odometer Implementation Schedule

Florida is implementing its electronic title or ''e-title'' system in three phases. Under the first phase, which Florida states is complete, participating lienholders are allowed, but not required, to have their titles and liens held electronically by the Department. This option allows lienholders to avoid maintaining paper lien portfolios. The Department and the lienholders encourage owners who satisfy their liens to continue to maintain the title electronically.

Under the second phase of the e-title project, dealers would be allowed to buy and sell e-title vehicles and take e-title vehicles in on trade without acquiring a paper title. It is the Agency's understanding that the program will extend to leased vehicles, including end-of-lease vehicles coming back to the

dealer and vehicles being traded in prior to the end of the lease. Lessors will give the dealer power of attorney to disclose the vehicle mileage, as indicated by the lessee on an odometer disclosure statement, on a secure reassignment form, which will then be used to transfer title from the Lessor to a subsequent purchaser. This process will obviate the need for the dealer to obtain a paper title.

The third phase of the project would extend e-title capability to private or casual sales. Under the proposal, the seller (transferor) and buyer (transferee) will have two options for completing a motor vehicle sale. Currently, the vehicle's title is either held physically by the vehicle owner or the vehicle is titled electronically. If the vehicle is titled electronically, the owner now must acquire a secure paper copy of the title prior to transferring the vehicle. The transferor makes the required odometer disclosure on the title and both parties sign the title, effectuating transfer of the vehicle. Under Florida's proposed program, if the vehicle has an e-title, the transferor would not be required to obtain a paper title to transfer it. The transferor and transferee will have the option to go to a tag agent or tax collector's office and, after providing adequate identification to the agent, execute a secure reassignment form to transfer title from the transferor to the transferee without the need to first acquire a paper title.[44]

D. Florida's Position on Meeting the Purposes of TIMA

Florida submits that its e-Odometer program meets the purposes of TIMA as described by NHTSA summarized above and described more fully in the Agency's Final Determination on the Commonwealth of Virginia's petition for alternate odometer disclosure requirements. *See* 74 FR 643, 647–48 (January 7, 2009). The petition identified the purposes of TIMA and the State's assessment on how its proposed program would comply with each purpose.

1. Vehicle Transfers in the Absence of a Lease Agreement

a. Casual or Private Sales

One purpose is to assure that the form of the odometer disclosure precludes odometer fraud. Florida asserts that the secure reassignment form will have the same security features currently included on title paper and will travel with the title record in FRVIS; both parties will be present together in a tag agency with identification in order to process the title transfer, which includes execution of the odometer disclosure statement on the secure reassignment form.

A second purpose of TIMA is to prevent odometer fraud by processes and mechanisms making the disclosure of an odometer's mileage on the title both a condition of the application for a title and a requirement for title issuance by a state. Florida states that under its proposal, odometer disclosure would remain a required data input for application of a title and a required output on the title. By having both parties present with required identification, Florida states the process would be more secure than the current process, which allows the owner to sign the title over to the buyer who then produces the document when obtaining title without the seller present.

A third purpose is to prevent alterations of disclosures on title and to preclude counterfeit titles through secure processes. Florida states in its petition that, with both parties present at a tag agency with identification, this process will prevent alterations and preclude counterfeit titles. If changes are necessary, a new secure document will be signed by both parties present in front of an authorized tag agent.

A fourth purpose is to create a record of the mileage on vehicles and a paper trail. Florida states that under its proposal, the secure document, whether a secure reassignment form or secure paper title, signed by both the buyer and seller will be scanned and stored as evidence of the agreement by both the buyer and seller of the odometer reading. This creates a permanent record that is easily checked by subsequent owners or law enforcement officials.

A fifth purpose is to protect consumers by assuring that they received valid representations of the vehicle's actual mileage at the time of transfer based on odometer disclosures. Under its proposal, Florida states this purpose is served because consumers (buyers) will be present with sellers at the time the title is transferred (currently this is not usually the case).

b. Sales Involving Licensed Dealers (With and Without a Lien)

One purpose is to assure that the form of the odometer disclosure precludes odometer fraud. Florida states its proposal would meet this purpose because the secure reassignment form will have the same security features currently included on title paper. The dealer will use secure reassignment forms, which will travel with the title, which the dealer would sign with the previous owner and with the new buyer.

A second purpose is to prevent odometer fraud by processes and mechanisms making the disclosure of an odometer's mileage on the title a condition of the application for a title and a requirement for the title issued by the State. Florida states that the e-title process requires disclosure of an odometer's mileage on a secure document. The secure reassignment forms would have the same security features currently included on title paper and would travel with the title record.

A third purpose is to prevent alterations of disclosures on a title and to preclude counterfeit titles through secure processes. Florida states that a title would not be issued to a buyer if the chain of ownership cannot be established. The submission of all secure reassignment forms would establish the chain of ownership. Odometer disclosures would be part of those forms.

A fourth purpose is to create a record of the mileage on vehicles and a paper trail. Florida notes that the secure document signed by the previous owner, the dealer, and the buyer would be scanned and stored as evidence of the agreement by both the buyer and seller of the odometer reading.

A fifth purpose is to protect consumers by assuring that they received valid representations of the vehicle's actual mileage at the time of transfer based on odometer disclosures. According to Florida, the secure reassignment forms would allow for valid representation of the odometer during both transactions (the original owner to dealer transaction and the subsequent dealer to buyer transaction).

2. Transfers Involving Leased Vehicles

One purpose is to assure that lessors have the vehicle's actual odometer mileage at the time of transfer. Florida states that the only change proposed by its e-title proposal from the current process is that, instead of signing an actual paper title, the lessor would sign a power of attorney and disclose the odometer reading as provided to it by

[44] The secure reassignment form contains an odometer disclosure statement that is required to transfer the vehicle title. Sellers would accurately disclose vehicle mileage in the presence of both the buyer as well as a tag agent. The tag agent will verify that the buyer agrees to the mileage being disclosed and will require proper identification from both the buyer and the seller. (Currently, a vehicle owner with an e-title who wants to transfer or sell the vehicle must acquire a paper title from the State to process the transaction.)

the lessee. This power of attorney would then transfer this odometer information to the dealer to sell the vehicle.

A second purpose is to assure that lessees provide lessors with an odometer disclosure statement. Florida states that its proposed e-title process would not affect this requirement.

A third purpose is to assure that lessees are formally notified of their odometer disclosure obligations and the penalties for failing to comply by not providing complete and truthful information. Florida states that its proposed e-title process would not affect this requirement.

A fourth purpose is to set rules for accurate disclosure by lessors, directing them to indicate on the title the mileage provided by the lessee, unless the lessor has reason to believe that the disclosure by the lessee does not reflect the actual mileage of the vehicle. Florida states that its proposal would satisfy this purpose by allowing the lessor to indicate the mileage on a secure reassignment form that would travel with the title.

A fifth purpose is to create records and a paper trail, including the written, dated and signed odometer disclosure statement by the lessee. Florida states that its proposal would not change this requirement. The title would remain in electronic form; however, the secure reassignment form with the lessor's odometer disclosure, the power of attorney form and bill of sale would all be scanned into the title history. The Department's database would store these documents with the title.

3. Mileage Disclosures by Power of Attorney

Florida's proposed program incorporates mileage disclosure by power of attorney in one circumstance—when a lessee brings a leased vehicle to a dealer, the lessor would give a power of attorney to the dealer for the purpose of mileage disclosure on the secure reassignment form to effect transfer of the vehicle from the lessor to a third party. NHTSA has not previously had occasion to identify and discuss these purposes when addressing prior petitions for alternate odometer disclosure requirements from other states because other states' proposals did not encompass the use of powers of attorney for mileage disclosure.

V. Analysis

Under TIMA, NHTSA ''shall approve alternate motor vehicle mileage disclosure requirements submitted by a State unless the [NHTSA] determines that such requirements are not consistent with the purpose of the disclosure required by subsection (d) or (e) as the case may be.'' The purposes are discussed above, as is Florida's proposed program. We now provide our initial assessment whether Florida's proposal satisfies TIMA's purposes as relevant to its petition.[45] We first address casual or private sales, followed by sales involving a licensed dealer of vehicles with and without a lien, sales of leased vehicles, and finally sales using a power of attorney for purposes of odometer disclosure.

A. Florida's Proposal in Light of TIMA's Purposes Regarding Vehicle Transfers in the Absence of a Lease Agreement

1. Casual or Private Sales

One purpose of TIMA is to assure that the form of the odometer disclosure precludes odometer fraud. In this regard, NHTSA has initially determined that Florida's proposed alternate disclosure requirements satisfy this purpose as the proposal relates to casual or private sales. Under Florida's proposal, there would be an e-title. A required part of the data to be entered in the transfer of title would be the vehicle's odometer reading. In casual/private sales, the seller and buyer would visit a tag office together, provide identification to the tag agent, and sign a secure reassignment form transferring ownership and disclosing the odometer reading. This is one document and it would be signed before a tag agent. The secure reassignment form including the required odometer disclosure statement would be scanned and reside as an electronic record within the Department's database that would be linked to the vehicle's title through title number and VIN. If a hard copy of the title is needed or desired, Florida can generate a paper title with the odometer disclosure statement on the title using a secure printing process. As to the form of the title containing a space for the transferor to disclose the vehicle's mileage, the proposed Florida program would provide an electronic equivalent to these requirements for use in a subsequent sale of the vehicle, as transfers would be effected electronically on secure reassignment forms or paper titles that provide space for the required odometer disclosure in keeping with TIMA and current practice.[46]

Another purpose of TIMA is to prevent odometer fraud by processes and mechanisms making the disclosure of odometer mileage on the title a condition of the application for a title and a requirement for the title issued by the State. NHTSA has initially determined that Florida's proposed electronic process satisfies this purpose as it relates to casual or private sales. Florida's proposed electronic title transfer process would require proper identification of the seller and buyer and disclosure and acceptance of odometer information on a secure reassignment form in front of a tag agent before the transaction can be completed. While the form is referred to as a reassignment form, viewed from a e-title transactional standpoint, it appears to be an information entry form used in the context where the buyer and seller both appear before the tag agent and simply use the document to convey odometer information, with their signatures, for the tag agent to record in the e-title system. We note that Florida's use of the term ''secure reassignment form'' in this situation appears to be a misnomer. The transfer of title in casual or private sales is not a reassignment as there is no prior assignment. The document is more accurately described as a secure State title transfer form for use when a vehicle has e-title and the title cannot be physically signed.

Another purpose of TIMA is to prevent alterations of disclosures on titles and to preclude counterfeit titles through secure processes. The Agency has initially determined that Florida's proposed program satisfies this purpose as it relates to casual or private sales. Florida's alternate disclosure requirements appear to be as secure as current paper titles in casual or private sales. As we understand Florida's proposal, the odometer statement would be disclosed initially on secure paper—either on the paper title itself or on a secure reassignment form at one of Florida's authorized tag agency offices. First, both buyer and seller would sign the reassignment form in front of a tag agent, which would ensure the security of that aspect of the proposed process. Second, Florida's reassignment form would be secure; it would be set forth by means of a secure printing process or other secure process in compliance with 49 CFR 580.4. On subsequent title transfers in casual or private sales, the transferor and transferee would have to

[45] Florida would continue to be subject to all Federal requirements that are not based on Section 408(d) and (e) of the Cost Savings Act as amended, recodified at 49 U.S.C. 32705(b) and (c).

[46] Florida notes that paper titles will still be necessary for title transactions involving at least one out of state party. For instance, if a vehicle enters Florida with an out of state title, Florida cannot recognize another state's e-title. The buyer will need to obtain a signed paper title from the seller. Conversely, if an owner sells a Florida titled vehicle to someone who will title it in another state, the owner will need to obtain the paper title to allow the buyer to obtain a title in the other state.

complete the odometer disclosure and acceptance—either on a secure paper title issued in a conventional manner by the Department or on a secure reassignment form in front of a tag agent for the transaction to be completed.

Another purpose of TIMA is to create a record of the mileage on vehicles and a paper trail. The underlying purposes of this record and paper trail are to enable consumers to be better informed and provide a mechanism through which odometer tampering can be traced and violators prosecuted. In NHTSA's preliminary view, Florida's proposed program relating to casual or private sales satisfies this purpose. It would create a scheme of records equivalent to the current ''paper trail'' that assists law enforcement in identifying and prosecuting odometer fraud. Under the Florida proposal, creation of a paper trail would start with the requirement that a title cannot be transferred until and unless both the transferor and transferee execute a secure paper title consistent with the Federal regulations or a secure reassignment form, including the required odometer disclosure statement in front of a tag agent. Scanned copies of the title and secure reassignment form(s) would be stored in the vehicle's title record in FRVIS. If a paper title is requested, the odometer disclosure statement would be provided on the secure paper title.

The Department would retain an electronic copy of the prior titles (including the prior odometer disclosure statements) and any supporting documentation, including secure reassignment forms. The Department would scan these documents and store them with the vehicle's electronic title history. For title images, the Department would store all applicable data and images of documents in the title history for the vehicle in FRVIS. Furthermore, Florida requires that all documents used to issue a title be retained for a period of at least ten (10) years. These electronic records would create the electronic equivalent to a paper trail in a paper-based system that would be readily available to law enforcement. Additionally, the vehicle mileage would be available for public view via an online motor vehicle check available to Florida customers.

Whether Florida's program as it relates to casual or private sales conforms to TIMA's overall purpose is discussed in subpart D below.

2. Sales Involving Licensed Dealers (Vehicles Without and With a Lien)

One purpose of TIMA is to assure that the form of the odometer disclosure precludes odometer fraud. As discussed above, to prevent odometer fraud facilitated by disclosure statements that were separate from titles, TIMA required mileage disclosures to be on a secure vehicle title, containing space for the seller's attested mileage disclosure and a new disclosure by the buyer when the vehicle was sold again, instead of a separate document.[47] NHTSA has initially determined that the form of disclosure in Florida's proposal for retail vehicle sales to dealers of vehicles without or with a lien would not satisfy this purpose, for the reasons discussed below.[48]

In instances when a private seller sells a vehicle to a dealer, Florida proposes that the seller and dealer complete a secure reassignment form to make the odometer disclosure. Florida's assessment of its proposal in light of the purposes of TIMA states that the reassignment forms will travel with the title. But from a TIMA perspective, when there is a transfer involving a transferor in whose name the vehicle is titled, the transferor must disclose the mileage on a title, and not on a separate reassignment document such as one that is supposed to travel with the title. Thus, Florida's proposed program is not consistent with a purpose of the disclosure required by TIMA pertaining to the form of the disclosure.

Another purpose of TIMA is to prevent odometer fraud by processes and mechanisms making odometer mileage disclosure on the title a condition for the application for a title and a requirement for the title issued by the State. As explained above, a major shortcoming of the odometer provisions of the Cost Savings Act prior to TIMA, was the absence of a requirement that the odometer disclosure statement be on the vehicle's title that, following the sale of the vehicle, was presented to the State for retitling. NHTSA has initially determined that Florida's proposed alternate disclosure requirements for vehicles transferred from a private owner to a licensed dealer, do not satisfy this purpose. We have initially determined that Florida's proposed alternate disclosure requirements for subsequent vehicle transfers between licensed dealers satisfy this purpose.

As discussed above, Florida's proposal for sales to dealers provides for disclosure and acceptance of odometer information on a secure reassignment form, not on a title. Following the ultimate re-sale of a vehicle to a consumer by a dealer (possibly not the same dealer that took the vehicle as a trade-in), that dealer would take secure reassignment forms to the tag agency for titling. In this respect, Florida does not propose making the disclosure of odometer mileage on the title in the initial transaction involving a transferor in whose name the vehicle is titled a condition for the application for a title and a requirement for the title issued by the State. Florida would provide for issuance of a new title based on secure reassignment forms. Such a form can be easily discarded and another secure reassignment form bearing an inaccurate odometer disclosure could be created by an unscrupulous dealer somewhere in the chain of transfers. We have tentatively concluded that, in order for the proposed program to be consistent with a purpose of TIMA, in the first transfer of title of a vehicle from a private seller to a dealer Florida may not provide for a mileage disclosure on a secure reassignment form.

A third purpose of TIMA is to prevent alterations of disclosures on titles and to preclude counterfeit titles through secure processes. In view of the shortcomings of Florida's proposed program regarding the use of secure reassignment forms instead of titles in sales between private parties and dealers discussed above, NHTSA believes that it is inappropriate to reach a conclusion regarding the security aspects of those forms in that context. The Agency has initially determined that Florida's proposed alternate disclosure requirements for the subsequent transfer of vehicles between dealers satisfy this purpose. As we understand Florida's proposal, the secure reassignment form would be produced by the State and would be comparable to reassignment forms now in use in transfers between dealers.

A fourth purpose of TIMA is to create a record of the mileage on vehicles and a paper trail. The underlying purposes of this record and paper trail are to inform consumers and provide a mechanism to trace and prosecute odometer tampering. NHTSA's initial determination is that Florida's proposed alternative scheme would not, in one critical respect, create a scheme of records equivalent to the current ''paper

[47] We note that Florida's proposal addresses vehicles subject to liens. In amendments to TIMA pertaining to titles in the possession of a lienholder when the transferor transfers ownership of the vehicle, Congress maintained the requirement that the disclosure be on the title itself. It did provide for the use of a secure power of attorney under restrictive conditions, as an exception to the prohibition that a person may not sign an odometer disclosure statement as both the transferor and transferee.

[48] If, however, the transfer from the titled seller to a dealer was on a title, NHTSA's initial decision would be that Florida's proposal insofar as it concerns subsequent transfers of the vehicle among licensed Florida dealers meets the purposes of TIMA.

trail'' used for identifying and prosecuting odometer fraud. Florida proposes widespread use of secure reassignment forms in transfers from private parties to dealers. In particular, Florida proposes that, instead of a title, a reassignment form would be used to create the record of the mileage on the odometer in the case of a transferor in whose name the vehicle is titled. This recorded mileage figure establishes a critical benchmark for evaluating the remaining mileage declarations that will follow. NHTSA has initially determined that in these circumstances use of reassignment documents would not create the records and paper trail contemplated by TIMA. Our concerns about odometer disclosures on these forms in lieu of disclosure on the title itself are described above.

NHTSA tentatively concludes the remainder of Florida's proposal would otherwise meet the record creation purposes of TIMA. Regardless of whether the buyer requests a paper title or surrenders the title to the Department to maintain electronically, the Department would retain an electronic copy of the prior titles (including the prior odometer disclosure statements) and any supporting documentation, including secure reassignment forms and powers of attorney. The Department would scan these documents and store them in FRVIS with the vehicle's electronic title history. For title images, FRVIS would store all applicable data and stores images of documents that remain in the title history for the vehicle. Furthermore, Florida requires that all documents used to issue a title be retained for a period of at least ten (10) years. These electronic records would create the electronic equivalent of a paper based system that would be readily available to law enforcement. Additionally, the vehicle mileage would be available for public view via an online motor vehicle check available to Florida customers.

Whether Florida's program as it relates to sales involving licensed dealers conforms to TIMA's overall purpose is discussed in subpart D below.

B. Florida's Proposal in Light of TIMA's Purposes Relevant to Leased Vehicles

One purpose of TIMA's leased vehicle provisions is to assure that the lessor has the vehicle's actual odometer mileage at the time the lessor transfers ownership. The Agency has initially determined that Florida's proposed program requirements satisfy this purpose. As we understand Florida's proposal, the State proposes to require vehicle lessees to sign an odometer disclosure statement that would be provided to the buyer by the lessor.

A second purpose of TIMA's leased vehicle provisions is to assure that the lessee provides the lessor with an odometer disclosure statement regarding the mileage of the vehicle at the time of transfer. The Agency has initially determined that Florida's proposed program requirements satisfy this purpose. As discussed above, the lessee would provide this to the lessor via an odometer disclosure statement when the lessee surrenders the leased vehicle to the dealer, and the lessor would provide this statement to the buyer.

A related purpose is to assure that lessees are formally notified of their odometer disclosure obligations and the penalties for failing to comply by not providing complete and truthful information. We have initially determined that Florida's proposal does not satisfy this purpose. As described in the petition, Florida's alternate disclosure requirements do not address this purpose other than a statement in the petition that the e-title process does not change the current requirement. We recognize that Florida's odometer disclosure law requires lessors to conform to Federal disclosure regulations under 49 CFR 580.7. *Fla. Stat. Ann.* § 319.225(4) (2010). Florida law also provides that State statutes regarding vehicle transfer and reassignment forms and odometer disclosure statements be construed to conform to 49 CFR part 580. *Fla. Stat. Ann.* § 319.225(9) (2010). Further, according to Florida, the requirement that the lessee provide the lessor with an odometer disclosure statement when the lessee surrenders the vehicle typically is part of the lease agreement, which provides notice of the requirement and the penalties for failing to comply. But this is not a formal requirement. Underlying the adoption of the leased vehicles provisions of TIMA, there was significant concern about considerable understatements of mileage on leased vehicles that were turned-in and resold. Our initial determination is that this reliance on what is typically in a lease is not sufficient to assure that lessees are formally notified of their odometer disclosure obligations and the penalties for failing to comply by not providing complete and truthful information.

A fourth purpose is to set the ground rules for the lessors, providing for lessors to indicate the mileage provided by the lessee on the title, unless the lessor has reason to believe that the disclosure by the lessee does not reflect the actual mileage of the vehicle. We have initially determined that Florida's proposal does not satisfy this purpose. A lessee would make an odometer disclosure by executing an odometer disclosure statement upon relinquishing the leased vehicle. The lessor may transfer the odometer disclosure statement from the lessee's statement to a secure power of attorney unless the lessor has reason to believe that the lessee's statement does not reflect the vehicle's actual mileage, in which case the lessor would be required to indicate on the title ''true mileage unknown'' or words to that effect.[49] As explained in the discussion on powers of attorney above, odometer disclosure can be made using a secure power of attorney document only in the limited circumstances when the transferor's title is physically held by a lienholder at the time of the transfer or the transferor to whom the title was issued by the State has lost the title and the transferee obtains a duplicate title on behalf of the transferor. These limited circumstances do not include lessors giving power of attorney to dealers for purposes of odometer disclosure. Under Florida's proposal, the vehicle title is not unavailable to the lessor—the lessor, as the titled owner of the vehicle in Florida, can simply request a paper copy of the title from the State and effect transfer of the vehicle on the secure paper title.

A fifth purpose of TIMA's leased vehicle provisions is to create records and a paper trail. The paper trail includes the signed odometer disclosure statement by the lessee. The Agency has initially determined that Florida's proposed alternate disclosure requirements do not satisfy this purpose. Under Florida's proposal as we understand it, the lessee would be required to sign an odometer disclosure statement when the vehicle is surrendered. The lessor would not be required to sign this document. The lessor would execute a power of attorney to the dealer that would include the odometer disclosure statement as provided by the lessee. The dealer then would sign the secure reassignment form (apparently for the transferor/lessor and as transferee), providing an odometer disclosure provided by the lessor on the secure power of attorney. When the dealer sells the vehicle to another buyer, the dealer would take the documents (bill of sale, reassignment form, and power of

[49] Florida recognizes that the electronic process must incorporate the brand (actual mileage, exceeds mechanical limits, or true mileage unknown) requirement, and Florida would continue to show the odometer reading and brand on paper titles and maintain an electronic record of the odometer reading and the brand.

attorney) to the tag agency. The title would be transferred to the buyer. Whether the buyer elects a new paper title or e-title, the related documents—including the old title and any supporting documentation—would be scanned and stored with the vehicle title history by the Department. Florida does not state whether the lessee's odometer disclosure statement to the lessor would be scanned. The electronic documents would be associated with the vehicle title history by title number and VIN.

Florida's proposed program for leased vehicle transactions would not create a scheme of records equivalent to the current ''paper trail'' now assisting consumers and law enforcement. Under TIMA as implemented, dealers and lessors are required to retain all odometer disclosure statements that they issue and receive. However, Florida's proposed program does not specify that the dealer and lessor would be required to maintain a copy of the lessee's odometer disclosure statement, and does not provide an alternative mechanism such as a provision that the statement would be forwarded to either a tag agent for mileage verification or the Department for scanning and maintaining as part of the vehicle's title history. We have tentatively concluded that, in the transfer of title of vehicles subject to a lease agreement, Florida's proposed program does not satisfy the purposes of TIMA because it does not require dealers and lessors to retain odometer disclosure statements from lessees.

The overall purpose of TIMA's leased vehicle provisions is to ensure that vehicles subject to leases have adequate odometer disclosure statements executed on titles at the time of transfer. The Agency has initially determined that Florida's proposed program does not meet TIMA's overall requirement. Under Florida's proposal, upon the termination of the lease, a lessee would sign an odometer disclosure statement. This is an important document that the lessor must sign. But under Florida's proposal, the lessor signs a separate secure power of attorney to the dealer which only assumedly includes the odometer reading. In any event, the lessor's power of attorney to a dealer for purposes of odometer disclosure allows the same person to sign an odometer disclosure for both parties. That is fraught with potential problems of incorrect odometer statements. Congress did not extend the use of power of attorney to this circumstance.

Florida's proposal provides for odometer disclosure in transfer of leased vehicles to be made on a secure reassignment form. Lessors (transferors) are titled owners in Florida. But as explained above, in the case of a transferor in whose name the vehicle is titled, the transferor shall disclose the mileage on the title, and not on a reassignment document. Florida's proposal runs counter to this requirement.

The dealer would take the documents (bill of sale, reassignment document, and power of attorney) to the tag agency; thereafter, the documents would be sent to the Department and scanned into the title history. However, Florida's proposal does not require the odometer disclosure statement made by the lessee to be co-signed by the lessor, submitted with title documents, or to be retained by any party. In the Agency's view, this is an important link in the chain of odometer disclosure for a leased vehicle. This link should be preserved as much as any other.

Because of the above-identified problems, the Agency tentatively concludes that Florida's proposed program on leased vehicles does not meet TIMA's overall purpose of ensuring that vehicles subject to leases have adequate odometer disclosure statements executed on titles at the time of transfer.

C. Florida's Proposal in Light of the Purposes of TIMA as Amended Relevant to Odometer Disclosure by Power of Attorney

One purpose of the power of attorney provision in TIMA as amended was to provide limited exception(s) to a rule prohibiting a person from signing an odometer disclosure statement as both the transferor and transferee in the same transaction, which had the effect of prohibiting the use of powers of attorney for purposes of recording mileage on titles of motor vehicles. Florida's proposal does not fit within the narrow confines of this exception. Under Florida's proposed program, a lessor (not a lienholder) would execute a power of attorney. No lienholder would be involved nor is there a requirement that the title be lost. The overall purposes of TIMA as amended are not preserved by this proposed expansion of the Congressional amendment of TIMA. We have initially determined that Florida's proposed program is not consistent with a purpose of the disclosure required by TIMA, including amendments thereto.[50]

A second purpose was to assure that the form of the power of attorney document issued by a State precluded odometer fraud. We have not made a determination as to whether Florida's proposal meets this purpose. Florida's proposal does not address the form of the secure power of attorney documents it would use. The requirements for form are discussed in section III.C above.

A third purpose is to set the ground rules for transferors and transferees, providing that both parties provide all of the information and signatures required in parts A, and as applicable B and C of the secure power of attorney form. We have not made a determination as to whether Florida's proposal meets this purpose. Florida's proposal does not address this purpose.

A fourth purpose was to prevent odometer fraud by processes, mechanisms, and conditions calculated to result in the disclosure of the actual mileage on the title. We have not made a determination as to whether Florida's proposal meets this purpose. Florida's proposal does not address the processes, mechanisms and conditions related to use of the secure power of attorney for the purposes of odometer disclosure.

A fifth purpose is to prevent alterations of odometer disclosures by powers of attorney and to preclude counterfeit powers of attorney through secure processes. NHTSA has initially concluded that Florida's proposed process does not satisfy this purpose. Under NHTSA regulations, power of attorney forms shall be issued by the State and shall be set forth by a secure process. 49 CFR 580.13(a). As we understand Florida's proposal, the power of attorney document used by the lessor would not be State-issued and would not be secure. As noted above, TIMA was written in part to prevent alterations of disclosures on titles and precludes counterfeit titles by requiring secure processes. In furtherance of these purposes, paper titles (incorporating the disclosure statement) must be produced using a secure printing process or protected by ''other secure process.'' Allowing lessors to transfer title and make the required odometer disclosure

[50] We again note that Florida's proposal for leased vehicles would not comply with Federal odometer disclosure statutes and regulations regarding use of a power of attorney to facilitate odometer disclosure. Under the proposal, a lessor would sign a secure power of attorney to the dealer that includes the odometer disclosure. The dealer would then sign the secure reassignment form agreeing with the odometer disclosure. In this scenario, the dealer would sign the secure reassignment form as both transferor/lessor and transferee/buyer. This practice is not consistent with TIMA as amended which precludes execution by one person except in specifically identified circumstances, which do not include transfers of leased vehicles and the associated odometer disclosure statement based on a lessee odometer disclosure statement that may or may not have been retained by the dealer and/or lessor and a non-secure power of attorney document from the lessor to the dealer.

through a non-secure power of attorney directly contradicts odometer disclosure requirements. While this process may add convenience to the process of transferring leased vehicles, it does so at the expense of the security requirements that are a foundation of TIMA. We have tentatively determined that Florida's proposed program does not meet this purpose. The power of attorney form—and any document used to reassign a vehicle title— must be issued by the State and produced by a secure process.

A sixth purpose is to create a record on the mileage on vehicles and a paper trail. We have not made a determination as to whether Florida's proposal meets this purpose. Florida's proposal does not address this purpose.

Seventh, the overall purpose is to protect consumers by assuring that they receive valid representations of a vehicle's actual mileage at a time of transfer. To the extent Florida's proposal addresses this purpose—providing for secure powers of attorney for purposes of mileage disclosure in the transfer of leased vehicles—NHTSA has initially concluded that Florida's proposed process does not satisfy it.

We note that Florida's proposed program would eliminate a current practice by Florida that does not comport with Federal odometer disclosure statutes and associated regulations. Florida's petition indicates that when an owner transfers a vehicle not subject to a lien to a dealer, the owner and dealer would execute a secure power of attorney, including an odometer disclosure statement, granting the dealer the power to make the odometer disclosure on the vehicle's paper title (which it needs to procure from the State before transfer of title can occur) and sign the title as transferor and transferee. Presumably, this practice would facilitate title transfer when the vehicle title is maintained electronically and neither the transferor nor dealer has immediate access to the paper title. Under TIMA and Agency regulations, a power of attorney may be used in making the odometer disclosure statement only if the title is lost or is in the possession of a lienholder when the transferor transfers ownership of the vehicle.[51] A party may not sign an odometer disclosure statement as transferor and transferee except as set forth in 49 CFR 580.13 or 580.14.[52] These regulations do not allow transferring vehicles not subject to a lien by power of attorney as is the current Florida practice. The Agency encourages Florida to discontinue its current practice of using a secure power of attorney to transfer title and disclose mileage for vehicles not subject to a lien without lost titles and require title transfer in these situations in a manner complying with current Federal statutes and regulations.

D. Florida's Proposal in Light of TIMA's Overall Purpose

TIMA's overall purpose is to protect consumers by assuring that they receive valid odometer disclosures representing a vehicle's actual mileage at the time of transfer. In Florida in casual or private sales, the transferor and transferee currently sign the title, disclosing the odometer and effecting transfer of title. The transferee then goes to a tag agent and presents the title for processing and printing of a new paper title in the transferee's name (or the transferee elects e-title and the new title, the old title, and any supporting documentation is scanned and maintained electronically by the Department). This comports with Federal law. Under Florida's proposal, both parties would meet at a tag office, provide identification information to the tag agent, and execute a secure reassignment form transferring ownership and disclosing the odometer reading, which is witnessed by the tag agent. The representation of a vehicle's mileage on the secure reassignment form in the presence of a tag agent would be at least as valid as that in the current paper title transfer—there would be an identification requirement and the disclosure would be made in the presence of a tag agent who has confirmed the identification of the transferor and transferee.[53] Further, copies of the identification documents, the prior title, supporting documents, and (when elected by the transferee) the new title, would be maintained electronically by the Department. This process likely would provide more (and provides no less) assurance of the validity of the odometer disclosure than a paper process. In addition, Florida's proposal would offer the public the opportunity to view the most recent odometer reading and date of that reading through an Internet application. A prospective buyer would be able to access the public e-Odometer information using the vehicle's VIN to assess a vehicle's true value by comparing the vehicle's current odometer reading to the electronic record stored with the Department.[54]

In sales involving licensed dealers (vehicles subject to a lien or not subject to a lien), as discussed above, Florida's proposed program relies on reassignment documents. Except in transactions following the first sale by the transferor in whose name the vehicle is titled, this is problematic, as discussed above. In view of this fundamental concern, which needs to be addressed by Florida, at this juncture, NHTSA is unable to further address the Florida program.

As discussed above, Florida's proposed program involving sales of leased vehicles, does not satisfy the overall purpose of TIMA protecting consumers by assuring that they receive valid odometer disclosures representing a vehicle's actual mileage at the time of transfer.

VI. NHTSA's Initial Determination

For the foregoing reasons, NHTSA preliminarily grants Florida's petition regarding proposed alternate disclosure requirements for vehicle transfers involving casual or private sales. NHTSA preliminarily denies Florida's petition regarding proposed alternate disclosure requirements for sales involving licensed dealers. NHTSA preliminarily denies Florida's petition regarding proposed alternate disclosure requirements for sales of leased vehicles.

This is not a final agency action. NHTSA invites comments within the scope of this notice from the public including Florida.

Request for Comments

How do I prepare and submit comments?

Your comments must be written and in English. To ensure that your comments are filed correctly in the

[51] 49 U.S.C. 32705(b)(2)(A); 49 CFR 580.13. Regulations require that this power of attorney be set forth by means of a secure printing process or other secure process. 49 CFR 580.4.

[52] 49 CFR 580.5(h). Under § 580.13, a transferor may give a power of attorney to his transferee for the purpose of mileage disclosure if the transferor's title is physically held by a lienholder or the transferor has lost his title and the transferee obtains a duplicate title on behalf of the transferor (and if otherwise permitted by State law). Under § 580.14, if part A of a secure power of attorney form has been used pursuant to § 508.13, and if otherwise permitted by State law, a transferee may give a power of attorney to his transferor to review the title and any reassignment documents for mileage discrepancies and if none are found, to acknowledge disclosure on the title.

[53] NHTSA observes that the use of a reassignment document in the fashion proposed here eliminates the concerns normally associated with the use of these documents in lieu of the actual title. As we understand the Florida proposal, the reassignment document is employed only to provide information to the tag agent entering data into the e-title. As the parties must provide adequate identification to the tag agent and complete the transaction in the agent's presence, the opportunities for fraud are greatly reduced.

[54] This would appear to provide the odometer reading upon which a CARFAX Vehicle History Report is based.

Docket, please include the docket number of this document in your comments.

Your comments must not be more than 15 pages long (*see* 49 CFR 553.21). We established this limit to encourage you to write your primary comments in a concise fashion. However, you may attach necessary additional documents to your comments. There is no limit on the length of the attachments.

Please submit two copies of your comments, including the attachments, to Docket Management at the address given under **ADDRESSES**.

You may also submit your comments to the docket electronically by logging onto the Dockets Management System Web site at *http://dms.dot.gov.* Click on ''Help & Information,'' or ''Help/Info'' to obtain instructions for filing the document electronically.

How can I be sure that my comments were received?

If you wish Docket Management to notify you upon its receipt of your comments, enclose a self-addressed, stamped postcard in the envelope containing your comments. Upon receiving your comments, Docket Management will return the postcard by mail.

How do I submit confidential business information?

If you wish to submit any information under a claim of confidentiality, you should submit three copies of your complete submission, including the information you claim to be confidential business information, to the Chief Counsel, NHTSA, at the address given above under **FOR FURTHER INFORMATION CONTACT**. In addition, you should submit two copies, from which you have deleted the claimed confidential business information, to Docket Management at the address given above under **ADDRESSES**. When you send a comment containing information claimed to be confidential business information, you should include a cover letter setting forth the information specified in our confidential business information regulation (49 CFR part 512).

Will the agency consider late comments?

We will consider all comments that Docket Management receives before the close of business on the comment closing date indicated above under **DATES**. To the extent possible, we also will consider comments that Docket Management receives after that date. If Docket Management receives a comment too late for us to consider it in developing the final rule, we will consider that comment as an informal suggestion for future rulemaking action.

How can I read the comments submitted by other people?

You may read the comments received by Docket Management at the address given under **ADDRESSES**. The hours of the Docket are indicated above in the same location.

You also may see the comments on the Internet. To read the comments on the Internet, go to *http://www.regulations.gov,* and follow the instructions for accessing the Docket.

Please note that even after the comment closing date, we will continue to file relevant information in the Docket as it becomes available. Further, some people may submit late comments. Accordingly, we recommend that you periodically check the Docket for new material.

Issued on: August 2, 2011.

O. Kevin Vincent,

Chief Counsel.

[FR Doc. 2011–19920 Filed 8–5–11; 8:45 am]

BILLING CODE 4910–59–P

Notices

Federal Register

Vol. 76, No. 152

Monday, August 8, 2011

This section of the FEDERAL REGISTER contains documents other than rules or proposed rules that are applicable to the public. Notices of hearings and investigations, committee meetings, agency decisions and rulings, delegations of authority, filing of petitions and applications and agency statements of organization and functions are examples of documents appearing in this section.

ADMINISTRATIVE CONFERENCE OF THE UNITED STATES

Committee on Rulemaking

ACTION: Notice of public meeting.

SUMMARY: Notice is hereby given of a public meeting of the Committee on Rulemaking of the Assembly of the Administrative Conference of the United States. The committee will meet to discuss a recommendation, concerning agency innovations in e-Rulemaking, for consideration by the full Conference. Complete details regarding the committee meeting, a related research report, how to attend (including information about remote access and obtaining special accommodations for persons with disabilities), and how to submit comments to the committee can be found in the ''Research'' section of the Conference's Web site, at *http://www.@acus.gov.* Click on ''Research,'' then on ''Conference Projects,'' and then on ''Agency Innovations in e-Rulemaking.''

Comments may be submitted by e-mail to *Comments@acus.gov,* with ''Committee on Rulemaking'' in the subject line, or by postal mail to ''Committee on Rulemaking Comments'' at the address given below. To be guaranteed consideration, comments must be received by Friday, August 19, 2011.

ADDRESSES: The meeting will be held at 1120 20th Street, NW., Suite 706 South, Washington, DC 20036.

FOR FURTHER INFORMATION CONTACT: Emily Schleicher Bremer, Designated Federal Officer, Administrative Conference of the United States, 1120 20th Street, NW., Suite 706 South, Washington, DC 20036; Telephone 202–480–2080.

SUPPLEMENTARY INFORMATION: The Committee on Rulemaking will meet to consider a draft recommendation concerning agency innovations in e-Rulemaking. The committee will discuss topics such as using agency Web sites and social media to promote participation in rulemaking proceedings and improving access for non-English speakers, persons with disabilities, and persons with low-bandwith Internet.

DATES: Wednesday, August 24, 2011, from 2 p.m. to 5 p.m.

Designated Federal Officer: Emily Schleicher Bremer.

Dated: August 2, 2011.

Jonathan R. Siegel,

Director of Research & Policy.

[FR Doc. 2011–19956 Filed 8–5–11; 8:45 am]

BILLING CODE 6110–01–P

DEPARTMENT OF AGRICULTURE

Submission for OMB Review; Comment Request

August 3, 2011.

The Department of Agriculture will submit the following information collection requirement(s) to OMB for review and clearance under the Paperwork Reduction Act of 1995, Public Law 104–13 on or after the date of publication of this notice. Comments regarding (a) Whether the collection of information is necessary for the proper performance of the functions of the agency, including whether the information will have practical utility; (b) the accuracy of the agency's estimate of burden including the validity of the methodology and assumptions used; (c) ways to enhance the quality, utility and clarity of the information to be collected; (d) ways to minimize the burden of the collection of information on those who are to respond, including through the use of appropriate automated, electronic, mechanical, or other technological collection techniques or other forms of information technology should be addressed to: Desk Officer for Agriculture, Office of Information and Regulatory Affairs, Office of Management and Budget (OMB), New Executive Office Building, Washington, DC; *OIRA_Submission@OMB.EOP.GOV;* or fax (202) 395–5806 and to Departmental Clearance Office, USDA, OCIO, Mail Stop 7602, Washington, DC 20250–7602.

DATES: Comments regarding these information collections are best assured of having their full effect if received by September 7, 2011. Copies of the submission(s) may be obtained by calling (202) 720–8681.

An agency may not conduct or sponsor a collection of information unless the collection of information displays a currently valid OMB control number and the agency informs potential persons who are to respond to the collection of information that such persons are not required to respond to the collection of information unless it displays a currently valid OMB control number.

Agricultural Marketing Service

Title: Data Collection for Container Availability.

OMB Control Number: 0581—NEW.

Summary of Collection: The Agricultural Marketing Act of 1946 (7 U.S.C. 1621–1627) directs and authorizes the collection and dissemination of marketing information including adequate outlook information, on a market area basis, for the purpose of anticipating and meeting consumer requirements aiding in the maintenance of farm income and to bring about a balance between production and utilization. As part of the Agricultural Marketing Service (AMS), the Transportation Services Division (TSD) informs, represents, and assists agricultural shippers and government policymakers through: Market reports, representation, analysis, assistance, and responses to inquiries.

Need and Use of the Information: TSD collects data for its analysis from public resources as well as unique data sources to help the agricultural exporters make the most out of the transportation options available. The new Data Collection for Container Availability will provide U.S. agricultural exporters with weekly data detailing the availability of containers at select locations around the country. AMS will collect these data on a voluntary basis from ocean container carriers and then provide these up-to-date data in an aggregate report on its Web site.

Description of Respondents: Business or other for-profit.

Number of Respondents: 21.

Frequency of Responses: Reporting: Weekly.

Total Burden Hours: 1,759.

Charlene Parker,

Departmental Information Collection Clearance Officer.

[FR Doc. 2011–20007 Filed 8–5–11; 8:45 am]

BILLING CODE 3410–02–P

DEPARTMENT OF AGRICULTURE

Animal and Plant Health Inspection Service

[Docket No. APHIS–2011–0063]

Notice of Request for Approval of an Information Collection; Brucellosis First Point Testing of Cattle and Bison; Brucellosis Standard Card Test

AGENCY: Animal and Plant Health Inspection Service, USDA.

ACTION: New information collection; comment request.

SUMMARY: In accordance with the Paperwork Reduction Act of 1995, this notice announces the Animal and Plant Health Inspection Service's intention to request approval of an information collection associated with the State-Federal Brucellosis Eradication Program.

DATES: We will consider all comments that we receive on or before October 7, 2011.

ADDRESSES: You may submit comments by either of the following methods:

- *Federal eRulemaking Portal:* Go to *http://www.regulations.gov/#!documentDetail;D=APHIS-2011-0063-0001.*
- *Postal Mail/Commercial Delivery:* Send your comment to Docket No. APHIS–2011–0063, Regulatory Analysis and Development, PPD, APHIS, Station 3A–03.8, 4700 River Road Unit 118, Riverdale, MD 20737–1238.

Supporting documents and any comments we receive on this docket may be viewed at *http://www.regulations.gov/#!docketDetail;D=APHIS-2011-0063* or in our reading room, which is located in room 1141 of the USDA South Building, 14th Street and Independence Avenue, SW., Washington, DC. Normal reading room hours are 8 a.m. to 4:30 p.m., Monday through Friday, except holidays. To be sure someone is there to help you, please call (202) 690–2817 before coming.

FOR FURTHER INFORMATION CONTACT: For information on brucellosis first point testing of cattle and bison and the standard card test, contact Dr. Arnold A. Gertonson, Senior Staff Veterinarian, Ruminant Health Programs, NCAHP, NAHPP, VS, APHIS, 2150 Centre Avenue, Building B, MSC 3E20, Fort Collins, CO 90526–8117; (970) 494–7363. For copies of more detailed information on the information collection, contact Mrs. Celeste Sickles, APHIS' Information Collection Coordinator, at (301) 851–2908.

SUPPLEMENTARY INFORMATION: *Title:* Brucellosis First Point Testing of Cattle and Bison; Brucellosis Standard Card Test.

OMB Number: 0579-xxxx.

Type of Request: Approval of an information collection.

Abstract: Under the Animal Health Protection Act (7 U.S.C. 8301 *et seq.*), the Animal and Plant Health Inspection Service (APHIS) of the United States Department of Agriculture is authorized, among other things, to prohibit or restrict the importation and interstate movement of animals and animal products to prevent the introduction into and dissemination within the United States of animal diseases and pests and for eradicating such diseases when feasible.

Brucellosis is a contagious disease that primarily affects cattle, bison, and swine. It causes the loss of young through spontaneous abortion or birth of weak offspring, reduced milk production, and infertility. The continued presence of brucellosis in a herd seriously threatens the health of other animals and can cause devastating losses to farmers in the United States.

The State-Federal Brucellosis Eradication Program, a national cooperative program, is working to eradicate this serious disease of livestock from the United States. The program uses a system of State and area classifications, movement restrictions, testing protocols, extensive epidemiological investigations, and other measures to prevent its spread and eradicate the disease.

First point testing (FPT) is a key method for controlling brucellosis and is performed at a Veterinary Services (VS)-approved stockyard or other points of first concentration when livestock are moved from the farm of origin. The brucellosis standard card test is used as the official FPT brucellosis test for cattle or bison when a State animal health official has specifically designated it as the official test for cattle and bison at VS-approved stockyards in that State. The test is used to determine the brucellosis disease status of cattle and bison for interstate movement from the approved stockyards and at VS-approved brucellosis diagnostic laboratories. Only authorized State and Federal brucellosis program personnel and accredited veterinarians may conduct the brucellosis standard card test on cattle and bison at premises other than VS-approved livestock facilities. Card test authorization involves information collection activities, including a memorandum of understanding, a card test notice, and an authorization form.

We are asking the Office of Management and Budget (OMB) to approve our use of these information collection activities for 3 years.

The purpose of this notice is to solicit comments from the public (as well as affected agencies) concerning our information collection. These comments will help us:

(1) Evaluate whether the collection of information is necessary for the proper performance of the functions of the Agency, including whether the information will have practical utility;

(2) Evaluate the accuracy of our estimate of the burden of the collection of information, including the validity of the methodology and assumptions used;

(3) Enhance the quality, utility, and clarity of the information to be collected; and

(4) Minimize the burden of the collection of information on those who are to respond, through use, as appropriate, of automated, electronic, mechanical, and other collection technologies; *e.g.,* permitting electronic submission of responses.

Estimate of burden: The public reporting burden for this collection of information is estimated to average 0.1768953 hours per response.

Respondents: State animal health officials and accredited veterinarians.

Estimated annual number of respondents: 57.

Estimated annual number of responses per respondent: 4.8596491.

Estimated annual number of responses: 277.

Estimated total annual burden on respondents: 49 hours. (Due to averaging, the total annual burden hours may not equal the product of the annual number of responses multiplied by the reporting burden per response.)

All responses to this notice will be summarized and included in the request for OMB approval. All comments will also become a matter of public record.

Done in Washington, DC, this 2nd day of August 2011.

Gregory L. Parham,

Administrator, Animal and Plant Health Inspection Service.

[FR Doc. 2011–20010 Filed 8–5–11; 8:45 am]

BILLING CODE 3410–34–P

DEPARTMENT OF AGRICULTURE

Animal and Plant Health Inspection Service

[Docket No. APHIS–2011–0089]

Oral Rabies Vaccine Trial; Availability of a Risk Assessment and an Environmental Assessment

AGENCY: Animal and Plant Health Inspection Service, USDA.

ACTION: Notice of availability and request for comments.

SUMMARY: We are advising the public that the Animal and Plant Health Inspection Service has prepared an environmental assessment relative to an oral rabies vaccination field trial in West Virginia. The environmental assessment, which is based on a risk analysis prepared to assess the risks associated with an experimental rabies vaccine, analyzes the use of that vaccine in field safety and efficacy trials in West Virginia. The proposed field trial is necessary to evaluate a wildlife rabies vaccine that will produce sufficient levels of population immunity in raccoons and striped skunks. We are making the environmental assessment and risk assessment available to the public for review and comment.

DATES: We will consider all comments that we receive on or before September 7, 2011.

ADDRESSES: You may submit comments by either of the following methods:

- *Federal eRulemaking Portal:* Go to *http://www.regulations.gov/#!documentDetail;D=APHIS-2011-0089-0001.*
- *Postal Mail/Commercial Delivery:* Send your comment to Docket No. APHIS–2011–0089, Regulatory Analysis and Development, PPD, APHIS, Station 3A–03.8, 4700 River Road Unit 118, Riverdale, MD 20737–1238.

Supporting documents and any comments we receive on this docket may be viewed at *http://www.regulations.gov/#!docketDetail;D=APHIS-2011-0089* or in our reading room, which is located in room 1141 of the USDA South Building, 14th Street and Independence Avenue, SW., Washington, DC. Normal reading room hours are 8 a.m. to 4:30 p.m., Monday through Friday, except holidays. To be sure someone is there to help you, please call (202) 6902817 before coming. This notice and the proposed environmental assessment are also posted on the APHIS Web site at (*http://www.aphis.usda.gov/regulations/ws/ws_nepa_environmental_documents.shtml*).

FOR FURTHER INFORMATION CONTACT: Dr. Dennis Slate, Rabies Program Coordinator, Wildlife Services, 59 Chennell Drive, Suite 7, Concord, NH 03301; (603) 223–9623. To obtain copies of the environmental assessment discussed in this notice, contact Beth Kabert, Environmental Coordinator, Wildlife Services, 140–C Locust Grove Rd., Pittstown, NJ 08867; (908) 735–5654, fax (908) 735–0821, or e-mail (*beth.e.kabert@aphis.usda.gov*). To obtain copies of the risk assessment (also the manufacturer's risk analysis with confidential business information removed), contact Dr. Patricia Foley, Risk Manager, Center for Veterinary Biologics, Policy, Evaluation, and Licensing, 1920 Dayton Avenue, Ames, IA 50010; (515) 337–6100, fax (515) 337–6120, or e-mail (*patricia.l.foley@aphis.usda.gov*).

SUPPLEMENTARY INFORMATION:

Background

The Wildlife Services (WS) program in the Animal and Plant Health Inspection Service (APHIS) cooperates with Federal agencies, State and local governments, and private individuals to research and implement the best methods of managing conflicts between wildlife and human health and safety, agriculture, property, and natural resources. Wildlife-borne diseases that can affect domestic animals and humans are among the types of conflicts that APHIS–WS addresses. Wildlife is the dominant reservoir of rabies in the United States.

One of the activities undertaken by APHIS–WS to address rabies is an Oral Rabies Vaccination (ORV) program involving the distribution of coated sachet baits containing vaccinia-rabies glycoprotein (VRG) vaccine to stop the spread of specific raccoon (eastern States), coyote (Texas), and gray fox (Texas, New Mexico, and Arizona) rabies virus variants to new areas. While this vaccine has proven to be orally effective in raccoons, coyotes, and foxes, it does not produce detectable levels of population immunity in striped skunks. Because skunks infected with raccoon rabies likely serve as a source of perpetuating and maintaining this rabies virus variant (i.e., raccoon rabies), they may compromise the effectiveness of our ORV program.

APHIS–WS is the lead agency regarding a proposed action that will test the safety and efficacy of a new human adenovirus type 5-rabies glycoprotein recombinant vaccine (AdRG1.3) rabies vaccine in an effort to find a rabies vaccine that will be safe and efficacious in a variety of animal species including striped skunks, raccoons, foxes, and coyotes. APHIS' Center for Veterinary Biologics (CVB) has prepared a risk assessment that will allow for experimental use of the AdRG1.3 vaccine.

The proposed field trial would take place within an approximately 559-square-mile area of Greenbrier, Summers, and Monroe Counties, WV, including portions of the USDA Forest Service National Forest System lands, excluding Wilderness Areas. The proposed rabies vaccine field trial is a collaborative effort between APHIS–WS, the Centers for Disease Control and Prevention, the vaccine manufacturer (Artemis Inc.), and the West Virginia Departments of Agriculture, Health and Human Resources, and Natural Resources.

APHIS' review and analysis of the proposed action are documented in detail in an environmental assessment (EA) titled ''Field Trial of an Experimental Rabies Vaccine, Human Adenovirus Type 5 Vector in West Virginia'' (July 2011). The EA analyzes a number of environmental issues or concerns with the oral rabies vaccine and activities associated with ORV field trials such as capture and handling animals for monitoring and surveillance purposes. The EA also analyzes alternatives to the proposed action, including no action (no Federal funding or participation by APHIS–WS). We are making the EA available to the public for review and comment. We will consider all comments that we receive on or before the date listed under the heading **DATES** at the beginning of this notice.

The EA and the CVB risk assessment may be viewed on the Regulations.gov Web site or in our reading room (see **ADDRESSES** above for instructions for accessing Regulations.gov and information on the location and hours of the reading room). You may request paper copies of the EA and risk assessment by calling or writing to the person listed under **FOR FURTHER INFORMATION CONTACT**.

The EA has been prepared in accordance with: (1) The National Environmental Policy Act of 1969 (NEPA), as amended (42 U.S.C. 4321 *et seq.*), (2) regulations of the Council on Environmental Quality for implementing the procedural provisions of NEPA (40 CFR parts 1500–1508), (3) USDA regulations implementing NEPA (7 CFR part 1b), and (4) APHIS' NEPA Implementing Procedures (7 CFR part 372).

Done in Washington, DC, this 4th day of August 2011.

Gregory L. Parham,

Administrator, Animal and Plant Health Inspection Service.

[FR Doc. 2011–20177 Filed 8–5–11; 8:45 am]

BILLING CODE 3410–34–P

DEPARTMENT OF AGRICULTURE

Forest Service

Black Hills National Forest, Custer, SD—Mountain Pine Beetle Response Project

AGENCY: Forest Service, USDA.

ACTION: Notice of intent to prepare an environmental impact statement.

SUMMARY: This project proposes to treat areas newly infested by mountain pine beetles on approximately 325,000 acres of the Black Hills National Forest. Treatments would occur in both South Dakota and Wyoming, and on all four Ranger Districts. Treatments would be carried out within the scope of direction provided in the Revised Land and Resource Management Plan for the Black Hills National Forest, as amended.

DATES: Comments concerning the scope of the analysis must be received by September 7, 2011. The draft environmental impact statement is expected in February 2012, and the final environmental impact statement is expected in August 2012.

ADDRESSES: Send written comments to Craig Bobzien, Forest Supervisor, Black Hills National Forest, 1019 N. 5th Street, Custer, SD 57730. Comments may also be sent via e-mail to *comments-rocky-mountain-black-hills@fs.fed.us,* with ''MPB Response Project'' in the subject line. Electronic comments must be submitted in Word (.doc), Rich Text (.rtf), or Adobe Acrobat (.pdf) format.

FOR FURTHER INFORMATION CONTACT: Katie Van-Alstyne, project team leader, Black Hills National Forest, Mystic Ranger District, Rapid City, SD 57701, phone (605) 343–1567. Individuals who use telecommunication devices for the deaf (TDD) may call the Federal Information Relay Service (FIRS) at 1–800–877–8339 between 8 a.m. and 8 p.m., Eastern Time, Monday through Friday.

SUPPLEMENTARY INFORMATION:

Purpose and Need for Action

The purposes of the project are to reduce the threat to ecosystem components including forest resources on National Forest System (NFS) lands from the ongoing mountain pine beetle epidemic, and to help protect local communities and resources on adjacent lands of other ownerships from large-scale wildfire by reducing hazardous fuel levels.

Proposed Action

Background The Black Hills National Forest (the Forest) lies in the Black Hills of western South Dakota and eastern Wyoming. Of the roughly 1.5 million acres in the Black Hills, about 1.2 million acres are National Forest System (NFS) lands, with lands of other ownership comprising another 300,000 acres. The predominant tree species on lands of all ownerships in the Black Hills is ponderosa pine (*Pinus ponderosae*). Since 1997 the Black Hills area has experienced a significant increase in pine tree mortality from an outbreak of mountain pine beetle (*Dendroctonus ponderosae*). In many parts of the Forest beetle populations are at or approaching epidemic levels. The outbreak in the Black Hills is part of a larger bark beetle epidemic which has recently affected more than 40 million acres of forest land in the western United States.

In the Black Hills mountain pine beetles (MPB) typically prefer stands of dense, mature pine trees. Tree stands in this condition are frequent and continuous throughout the area. Once attacked by beetles, most trees typically die, and eventually fall to the ground, adding dead and dry fuels within an area already rated as having high wildfire hazard. Since 1980, due to several factors including drought the Forest has seen a dramatic increase in acreage burned by wildfires. In that period over 250,000 acres have burned, consuming forest resources and posing threats to lands of other ownership intermingled with NFS lands.

Proposal The primary management tools for reducing beetle-caused tree mortality are removing infested trees, and reducing the density of remaining trees to lessen the susceptibility to attack. The Forest Service is working to manage persistent and increasing populations of the mountain pine beetle across the Forest. As part of that larger effort the Forest is proposing the Mountain Pine Beetle Response Project (MPBRP—the project). The project would be conducted as an authorized hazardous fuels reduction project under the authority of the Healthy Forests Restoration Act of 2003 (HFRA). The proposed action would treat newly detected infestations that may occur on about 325,000 acres of NFS lands to reduce and slow the spread of MPB. Specifically, newly infested trees would be removed, or made unsuitable for occupancy by beetles, before beetles can mature and further disperse to other trees. Some surrounding mature trees at risk of infestation may also be removed. A variety of treatment options would be available for use depending on conditions encountered on infested sites. Actual treatments used at any specific location would be determined at the time of implementation. Treatment options would include commercial tree removal using ground-based or cable logging equipment, or helicopter; non-commercial methods such as chipping trees or cutting them into short sections; and spraying small areas of trees to prevent infestation. Some temporary road construction is proposed, although generally road access would use existing road templates where available. Roads would be closed after use.

Possible Alternatives

The No Action alternative would not authorize any actions on the project area at this time. Other alternatives may be developed in response to public comments.

Lead and Cooperating Agencies

No cooperating agencies have been identified.

Responsible Official

The Responsible Official for this project is the Forest Supervisor, Black Hills National Forest, 1019 North 5th Avenue, Custer, South Dakota, 57730.

Nature of Decision To Be Made

After considering the proposed action and any alternatives, the environmental analysis, and public comment, the Forest Supervisor will decide whether to conduct treatments to reduce and slow the progress of the beetle epidemic. If an action alternative is selected, the Supervisor will decide where treatments may occur, and what actions are appropriate and may be taken. Finally, the decision will include the scope of monitoring that should occur. No Forest Plan amendment is proposed.

Scoping Process

This notice of intent initiates the scoping process, which guides the development of the environmental impact statement. The Forest Service seeks to involve interested parties in identifying issues related to responding to and managing the ongoing insect outbreak. Public comment will help the planning team identify key issues and opportunities to develop appropriate responses and alternatives, and monitoring strategies, and to evaluate the effects of the proposal.

Three public meetings are planned at this stage of project analysis. Those will be held August 23, 2011, in Sundance, Wyoming, at the Crook County Courthouse; August 25 in Hill City, South Dakota, at the high school; and August 30 in Spearfish, SD, at the Holiday Inn. All meetings will begin at 6 p.m. Mountain Time (MT), and end at 8 p.m. M.T. In addition, three public meetings will be held during the comment period on the Draft Environmental Impact Statement.

The Forest Service recognizes the broad public interest in the communities and counties lying in or adjacent to the Black Hills, as well as the States of South Dakota and Wyoming. The initial mailing list for this project includes counties and municipalities lying wholly or partially within the Forest boundary.

It is important that reviewers provide their comments at such times and in such manner that they are useful to the agency's preparation of the environmental impact statement. Therefore, comments should be provided prior to the close of the comment period and should clearly articulate the reviewer's concerns and contentions.

Comments received in response to this solicitation, including names and addresses of those who comment, will be part of the public record for this proposed action. Comments submitted anonymously will be accepted and considered, however.

August 2, 2011.

Dennis Jaeger,

Deputy Forest Supervisor.

[FR Doc. 2011–20036 Filed 8–5–11; 8:45 am]

BILLING CODE 3410–11–P

DEPARTMENT OF COMMERCE

Foreign-Trade Zones Board

[Docket 51–2011]

Foreign-Trade Zone 77—Memphis, TN; Application for Reorganization and Expansion Under Alternative Site Framework

An application has been submitted to the Foreign-Trade Zones (FTZ) Board (the Board) by the City of Memphis, grantee of FTZ 77, requesting authority to reorganize the zone under the alternative site framework (ASF) adopted by the Board (74 FR 1170, 1/12/09 (correction 74 FR 3987, 1/22/09); 75 FR 71069–71070, 11/22/10). The ASF is an option for grantees for the establishment or reorganization of general-purpose zones and can permit significantly greater flexibility in the designation of new ''usage-driven'' FTZ sites for operators/users located within a grantee's ''service area'' in the context of the Board's standard 2,000-acre activation limit for a general-purpose zone project. The application was submitted pursuant to the Foreign-Trade Zones Act, as amended (19 U.S.C. 81a-81u), and the regulations of the Board (15 CFR part 400). It was formally filed on August 3, 2011.

FTZ 77 was approved by the Board on April 2, 1982 (Board Order 189, 47 FR 16191, 04/15/82), expanded on June 17, 1992 (Board Order 582, 57 FR 28483, 06/25/92) and expanded and reorganized on September 27, 2001 (Board Order 1193, 66 FR 52741, 10/17/01).

The current zone project includes the following sites: *Site 1* (22 acres)—Port of Memphis at President's Island Industrial Park, intersection of Port Street and Channel Avenue, Memphis; *Site 2* (7 acres)—Spinnaker Inc., 5000 East Raines Road, Memphis; *Site 3* (109 acres total)—Contract Warehouse Associates and Barrett Distribution Centers, (106 acres) at 4836 Hickory Hill Road, Memphis; and Cox Construction (Parcel 3, 3 acres), 227 Highway 45 West, Humboldt; *Site 4* (419 acres total)—at Memphis Depot Business Park (Parcel 1, 391 acres) at 2163 Airways Blvd., Memphis; Flextronics Inc. (Parcel 2, 24 acres) at 5200 Tradeport Street, 6100 Holmes St, and 6380 Holmes Street, Memphis; and, Ozburn Hessey Logistics (Parcel 3, 4 acres) at 5265 Hickory Hill Road, Memphis; *Site 5* (5 acres)—Quality Packaging Services International, 3755 Knight Arnold Road, Memphis; *Site 6* (0.5 acres)—FedEx Supply Chain Services, Inc., 5025 Tuggle Road, Memphis; *Site 7* (30 acres)—Del-Nat Tire Corporation, 2365 Texas Drive, Memphis; *Site 8* (79 acres)—Patterson Warehouses, Inc., 5388 Airways Blvd., Memphis; and, *Site 9* (50 acres)—Baxter Healthcare Corporation, 4835 S. Mendenhall Road, Memphis.

The grantee's proposed service area under the ASF would be Shelby County, Tennessee, as described in the application. If approved, the grantee would be able to serve sites throughout the service area based on companies' needs for FTZ designation. The proposed service area is within the Memphis Customs and Border Protection port of entry.

The applicant is requesting authority to reorganize and expand its existing zone project under the ASF as follows: to remove parcel 3 of Site 3; to clarify the boundaries of parcel 1 of the 391-acre Memphis Depot Business Park within Site 4; to renumber parcel 2 of Site 4 as Site 11; to renumber parcel 3 of Site 4 as Site 12; and, to include an additional 16 acres at Site 6 (new total—16.5 acres). Site 4 would become a magnet site and Sites 1, 2, 3, 5, 6, 7, 8, 9, 11 and 12 would become ''usage-driven'' sites. The applicant is also requesting approval of the following ''magnet'' site: *Proposed Site 10* (2, 000 acres)—Frank C. Pidgeon Industrial Park, Paul Lowery Road in the southwest corner of the Memphis city limits. The ASF allows for the possible exemption of one magnet site from the ''sunset'' time limits that generally apply to sites under the ASF, and the applicant proposes that proposed magnet Site 10 be so exempted. Because the ASF only pertains to establishing or reorganizing a general-purpose zone, the application would have no impact on FTZ 77's authorized subzones.

In accordance with the Board's regulations, Kathleen Boyce of the FTZ Staff is designated examiner to evaluate and analyze the facts and information presented in the application and case record and to report findings and recommendations to the Board.

Public comment is invited from interested parties. Submissions (original and 3 copies) shall be addressed to the Board's Executive Secretary at the address below. The closing period for their receipt is October 7, 2011. Rebuttal comments in response to material submitted during the foregoing period may be submitted during the subsequent 15-day period to October 24, 2011.

A copy of the application will be available for public inspection at the Office of the Executive Secretary, Foreign-Trade Zones Board, Room 2111, U.S. Department of Commerce, 1401 Constitution Avenue, NW., Washington, DC 20230–0002, and in the ''Reading Room'' section of the Board's Web site, which is accessible via *http://www.trade.gov/ftz.* For further information, contact Kathleen Boyce at *Kathleen.Boyce@trade.gov* or (202) 482–1346.

Andrew McGilvray,

Executive Secretary.

[FR Doc. 2011–20049 Filed 8–5–11; 8:45 am]

BILLING CODE P

DEPARTMENT OF COMMERCE

International Trade Administration

[A–475–818]

Certain Pasta From Italy: Notice of Court Decision Not in Harmony With Final Results of Administrative Review and Notice of Amended Final Results of Administrative Review Pursuant to Court Decision

AGENCY: Import Administration, International Trade Administration, Department of Commerce.

SUMMARY: On July 22, 2011, the United States Court of International Trade (''CIT'') sustained the Department of Commerce's (''the Department's'') results of redetermination as applied to Atar, S.r.L. (''Atar'') pursuant to the CIT's order granting the Department's voluntary remand request in *Atar, S.r.L.* v. *United States,* 08–00004, (November 10, 2009) (''Remand Order''). *See* Final Remand Determination, Court No. 08–00004, filed May 6, 2010 (''Remand Results''), and *Atar, S.r.L.* v. *United States,* Court No. 08–00004, Slip Op. 11–87 (July 22, 2011). The Department is notifying the public that the final CIT judgment in this case is not in harmony with the Department's final determination and is amending the final results of the administrative review of the antidumping duty order on certain pasta from Italy covering the period of review (''POR'') of July 1, 2005, through June 30, 2006, with respect to Atar.

DATES: *Effective Date:* August 1, 2011.

FOR FURTHER INFORMATION CONTACT: Christopher Hargett, AD/CVD Operations, Office 3, Import Administration, International Trade Administration, U.S. Department of Commerce, 14th Street and Constitution Avenue, NW., Washington, DC 20230; telephone; (202) 482–4161.

SUPPLEMENTARY INFORMATION:

Background

On December 11, 2007, the Department published its final results of the administrative review for pasta from Italy for the period from July 1, 2005, through June 30, 2006. *See Certain Pasta from Italy: Notice of Final Results of the Tenth Administrative Review and Partial Rescission of Review,* 72 FR 70298 (December 11, 2007) (''*Final Results*'').

Atar appealed the *Final Results* to the CIT arguing, among other things, that the Department should not have rescinded the review with respect to Atar. On October 23, 2009, the Department requested a voluntary remand ''to allow the Department to reconsider its rescission of the administrative review with respect to Atar.'' *See* Memorandum in Response to Plaintiff's Motion for Judgment upon the Agency Record at 4. On November 10, 2009, the CIT granted the Department's request for a remand to reconsider its rescission of the administrative review with respect to Atar. *See* Remand Order.

On May 6, 2010, the Department issued its final results of remand redetermination in which it determined to issue final results of review with respect to Atar rather than rescind the review. *See* Remand Results. On July 22, 2011, the CIT affirmed the Department's Remand Results. *See Atar, S.r.L.* v. *United States,* Court No. 08–00004, Slip Op. 11–87 (July 22, 2011). *Timken Notice*

Consistent with the decision of the United States Court of Appeals for the Federal Circuit (''CAFC'') in *Timken Co.* v. *United States,* 893 F.2d 337 (CAFC 1990) (''*Timken*''), as clarified by *Diamond Sawblades Mfrs. Coalition* v. *United States,* 626 F.3d 1374 (CAFC 2010), pursuant to section 516A(c) of the Tariff Act of 1930, as amended (''the Act''), the Department must publish a notice of a court decision that is not ''in harmony'' with a Department determination and must suspend liquidation of entries pending a ''conclusive'' court decision. The CIT's judgment on July 22, 2011, sustaining the Department's Remand Results with respect to Atar constitutes a decision of that court that is not in harmony with the Department's *Final Results.* This notice is published in fulfillment of the publication requirements of *Timken.* Accordingly, the Department will continue the suspension of liquidation of the subject merchandise pending the expiration of the period of appeal or, if appealed, pending a final and conclusive court decision.

Amended Final Results

Because there is now a final court decision with respect to Atar, we determine that Atar was not the producer of pasta which it sold to the United States and that the actual pasta producers knew the goods were destined for the United States. Therefore, the appropriate assessment rate for entries during the period July 1, 2005, through June 30, 2006, is the rate applicable to each producer (*i.e.,* either the relevant producer-specific rate or all others rate).

In the event the CIT's ruling is not appealed or, if appealed, upheld by the CAFC, the Department will instruct U.S. Customs and Border Protection to assess antidumping duties on entries of the subject merchandise exported during the POR by Atar using the revised assessment rates calculated by the Department in the Remand Results.

This notice is issued and published in accordance with sections 516A(e)(1), 751(a)(1), and 777(i)(1) of the Act.

Dated: August 2, 2011.

Ronald K. Lorentzen,

Deputy Assistant Secretary for Import Administration.

[FR Doc. 2011–20052 Filed 8–5–11; 8:45 am]

BILLING CODE 3510–DS–P

DEPARTMENT OF COMMERCE

International Trade Administration

[A–351–841]

Polyethylene Terephthalate Film, Sheet, and Strip From Brazil: Preliminary Results of Antidumping Duty Administrative Review

AGENCY: Import Administration, International Trade Administration, Department of Commerce.

SUMMARY: The Department of Commerce (the Department) is conducting an administrative review of the antidumping duty order on polyethylene terephthalate film, sheet, and strip (PET film) from Brazil. This administrative review covers one respondent, Terphane, Inc. (Terphane) and the period of review (POR) is November 1, 2009 through October 31, 2010. Since Terphane did not respond to the Department's requests for information, we have assigned Terphane a margin based on adverse facts available (AFA). If these preliminary results are adopted in our final results of this review, we will instruct U.S. Customs and Border Protection (CBP) to assess antidumping duties on all appropriate entries of subject merchandise made during the POR.

Interested parties are invited to comment on these preliminary results. We intend to issue the final results no later than 120 days from the date of publication of this notice, pursuant to section 751(a)(3)(A) of the Tariff Act of 1930, as amended (the Act).

DATES: *Effective Date:* August 8, 2011.

FOR FURTHER INFORMATION CONTACT: Deborah Scott or Robert James, AD/CVD Operations, Office 7, Import Administration, International Trade Administration, U.S. Department of Commerce, 14th Street and Constitution Avenue, NW., Washington, DC 20230; telephone: (202) 482–2657 or (202) 482–0649, respectively.

SUPPLEMENTARY INFORMATION:

Background

On November 10, 2008, the Department published the antidumping duty order on PET film from Brazil. *See Polyethylene Terephthalate Film, Sheet, and Strip From Brazil, the People's Republic of China and the United Arab Emirates: Antidumping Duty Orders and Amended Final Determination of Sales at Less Than Fair Value for the United Arab Emirates,* 73 FR 66595 (November 10, 2008). On November 1, 2010, the Department published *Antidumping or Countervailing Duty Order, Finding, or Suspended Investigation; Opportunity To Request Administrative Review,* 75 FR 67079 (November 1, 2010). On November 30, 2010, DuPont Teijin Films, Mitsubishi Polyester Film, Inc., SKC, Inc., and Toray Plastics (America), Inc. (collectively, petitioners) requested that the Department conduct an administrative review of Terphane's sales of PET film from Brazil made during the period November 1, 2009, through October 31, 2010. On December 28, 2010, the Department published a notice of initiation for an administrative review of PET film from Brazil for Terphane for the period November 1, 2009, through October 31, 2010. *See Initiation of Antidumping and Countervailing Duty Administrative Reviews and Request for Revocation in Part,* 75 FR 81565 (December 28, 2010).

On February 9, 2011, the Department issued an antidumping duty questionnaire to Terphane. On March 14, 2011, Terphane submitted a letter to the Department stating that during the POR, it did not ship any subject merchandise to the United States and all of its shipments to the United States consisted of merchandise outside the scope of the order on PET film from Brazil. Terphane also indicated it did not have any sales or offers for sale of subject merchandise to the United States during the POR. Terphane thus informed the Department it did not intend to respond to the Department's questionnaire or otherwise participate in the administrative review.

On May 11, 2011, the Department placed on the record of this proceeding data from CBP regarding imports of PET film during the POR and entry documentation for a certain entry. On May 27, 2011, the Department issued a letter to Terphane, stating that information in the CBP data suggested subject merchandise had entered the United States during the POR. The Department therefore requested that Terphane review the information in the Department's May 11, 2011, memorandum to the file and provide clarification as to its claim of no shipments; further, the Department asked that Terphane respond to the February 9, 2011, questionnaire if indeed it had sales, entries or shipments of subject merchandise during the POR.

On June 10, 2011, Terphane submitted a letter stating it did not review the May 11, 2011, memorandum, but it did examine its own transactions during the POR and had identified one ''*de minimis*'' entry of subject merchandise. Terphane declared this entry had been accidentally shipped to the United States prior to the POR, and not pursuant to any sale or offer for sale, and that it paid cash deposits on this merchandise when it entered the United States during the POR. As a result, Terphane confirmed it would not be responding to the Department's questionnaire or otherwise participating in this administrative review.

Period of Review

The POR is November 1, 2009, through October 31, 2010.

Scope of the Order

The products covered by this order are all gauges of raw, pre-treated, or primed PET film, whether extruded or co-extruded. Excluded are metallized films and other finished films that have had at least one of their surfaces modified by the application of a performance-enhancing resinous or inorganic layer more than 0.00001 inches thick. Also excluded is roller transport cleaning film which has at least one of its surfaces modified by application of 0.5 micrometers of SBR latex. Tracing and drafting film is also excluded. PET film is classifiable under subheading 3920.62.00.90 of the Harmonized Tariff Schedule of the United States (HTSUS). While HTSUS subheadings are provided for convenience and customs purposes, our written description of the scope of these orders is dispositive.

Application of Facts Available

Section 776(a) of the Act provides that the Department shall, subject to section 782(d) of the Act, apply ''the facts otherwise available'' if (1) necessary information is not available on the record of an antidumping proceeding or (2) an interested party or any other person: (A) withholds information that has been requested by the administering authority; (B) fails to provide such information by the deadlines for the submission of the information or in the form and manner requested, subject to subsections (c)(1) and (e) of section 782 of the Act; (C) significantly impedes a proceeding under this title; or (D) provides such information but the information cannot be verified as provided in section 782(i) of the Act.

Where the Department determines that a response to a request for information does not comply with the request, section 782(d) of the Act provides that the Department will so inform the party submitting the response and will, to the extent practicable, provide that party with an opportunity to remedy or explain the deficiency. Section 782(d) of the Act further provides that if the party submits further information that is unsatisfactory or untimely, the Department may, subject to subsection (e), disregard all or part of the original and subsequent responses. Section 782(e) of the Act provides that the Department ''shall not decline to consider information that is submitted by an interested party and is necessary to the determination but does not meet all the applicable requirements established by the administering authority'' if the information is submitted in a timely manner, can be verified, is not so incomplete that it cannot be used, and the interested party acted to the best of its ability in providing the information. Where all of these conditions are met, the statute requires the Department to use the information supplied if it can do so without undue difficulties.

In this case, Terphane did not provide a response to our request for information and information necessary to make a determination in this segment of the proceeding is not on the record. In fact, Terphane specifically stated in its letter of March 14, 2011, and confirmed in its letter of June 10, 2011, that it would not be responding to the Department's questionnaire or otherwise participating in this administrative review. Thus, the Department preliminarily determines that necessary information is not available on the record to serve as the basis for the calculation of Terphane's margin. *See* section 776(a)(1) of the Act. We also preliminarily find that Terphane has withheld information requested by the Department and significantly impeded the proceeding. *See* section 776(a)(2)(A) and (C) of the Act; *see also e.g., Certain Lined Paper Products from India: Notice of Final Results of the First Antidumping Duty Administrative Review,* 74 FR 17149 (April 14, 2009), and accompanying Issues and Decision Memorandum at Comment 2.

Therefore, pursuant to sections 776(a)(1) and 776(a)(2)(A) and (C) of the Act, the Department preliminarily determines that the use of the facts otherwise available is warranted for Terphane. Because Terphane did not

respond to the Department's request for information, sections 782(d) and (e) of the Act are not applicable in this case.

Application of Adverse Facts Available and Selection of Adverse Facts Available Rate

Section 776(b) of the Act provides that, if the Department finds an interested party has failed to cooperate by not acting to the best of its ability to comply with requests for information, the Department may use an inference that is adverse to the interests of that party in selecting from the facts otherwise available. *See, e.g., Notice of Final Results of Antidumping Duty Administrative Review, and Final Determination to Revoke the Order In Part: Individually Quick Frozen Red Raspberries from Chile,* 72 FR 70295, 70297 (December 11, 2007). Adverse inferences are appropriate ''to ensure that the party does not obtain a more favorable result by failing to cooperate than if it had cooperated fully.'' *See* Statement of Administrative Action accompanying the Uruguay Round Agreements Act, H.R. Doc. No. 103–316, Vol. 1 (1994) (SAA) at 870. Furthermore, ''affirmative evidence of bad faith on the part of a respondent is not required before the Department may make an adverse inference.'' *See Antidumping Duties; Countervailing Duties; Final Rule,* 62 FR 27296, 27340 (May 19, 1997); *see also Nippon Steel Corp.* v. *United States,* 337 F.3d 1373, 1382–83 (Fed. Cir. 2003). In this case, the Department finds Terphane failed to cooperate to the best of its ability in this proceeding by refusing to respond to the Department's antidumping questionnaire and otherwise participate in the Department's administrative review. Therefore, since Terphane did not act to the best of its ability by complying with the Department's request for information, the Department has preliminarily determined an adverse inference is warranted in selecting from the facts otherwise available pursuant to section 776(b) of the Act. *See, e.g., Notice of Final Determination of Sales at Less Than Fair Value: Circular Seamless Stainless Steel Hollow Products From Japan,* 65 FR 42985, 42986 (July 12, 2000) (the Department applied total AFA where a respondent failed to respond to subsequent antidumping questionnaires).

Section 776(b) of the Act provides the Department may use, as an adverse inference, information derived from the petition, the final determination in the investigation, any previous administrative review, or other information placed on the record. The Department's practice, when selecting an AFA rate from among the possible sources of information, has been to ensure that the margin is sufficiently adverse ''as to effectuate the statutory purposes of the adverse facts available rule to induce respondents to provide the Department with complete and accurate information in a timely manner.'' *See, e.g., Certain Steel Concrete Reinforcing Bars from Turkey; Final Results and Rescission of Antidumping Duty Administrative Review in Part,* 71 FR 65082, 65084 (November 7, 2006).

The Department preliminarily determines to assign Terphane an AFA rate of 44.36 percent. This rate is Terphane's cash deposit rate from the investigation and represents the highest margin alleged in the petition. *See Notice of Final Determination of Sales at Less Than Fair Value: Polyethylene Terephthalate Film, Sheet, and Strip from Brazil,* 73 FR 55035, 55036 (September 24, 2008) (*Final Determination*). This rate is also Terphane's margin from the immediately preceding administrative review that was based on AFA. *See Polyethylene Terephthalate Film, Sheet, and Strip From Brazil: Final Results of Antidumping Duty Administrative Review,* 75 FR 75172 (December 2, 2010).

Corroboration of Secondary Information Used as Adverse Facts Available

Section 776(c) of the Act provides that, where the Department selects from among the facts otherwise available and relies on ''secondary information,'' the Department shall, to the extent practicable, corroborate that information from independent sources reasonably at the Department's disposal. Information from a prior segment of the proceeding constitutes secondary information. *See* SAA at 870; *see also e.g., Antifriction Bearings and Parts Thereof From France, Germany, Italy, Japan, Singapore, and the United Kingdom: Final Results of Antidumping Duty Administrative Reviews, Rescission of Administrative Reviews in Part, and Determination To Revoke Order in Part,* 69 FR 55574, 55577 (September 15, 2004). The word ''corroborate'' means the Department will satisfy itself that the secondary information to be used has probative value. *See* SAA at 870; *see also Certain Frozen Warmwater Shrimp from Brazil: Final Results and Partial Rescission of Antidumping Duty Administrative Review,* 73 FR 39940 (July 11, 2008), and accompanying Issues and Decision Memorandum at Comment 1.

To corroborate secondary information, the Department will, to the extent practicable, examine the reliability and relevance of the information to be used. *Id.* Unlike other types of information such as input costs or selling expenses, there are no independent sources for calculated dumping margins. The only sources for calculated margins are administrative determinations.

In an administrative review, if the Department chooses to use as facts available a petition rate which was corroborated in the less-than-fair-value (LTFV) investigation and no information has been presented in the current review that calls into the question of reliability of this information, the information is reliable. *See, e.g., Certain Tissue Paper from the People's Republic of China: Preliminary Results and Preliminary Rescission, In Part, of Antidumping Duty Administrative Review,* 72 FR 17477, 17480–81 (April 9, 2007), unchanged in *Certain Tissue Paper Products from the People's Republic of China: Final Results and Final Rescission, In Part, of Antidumping Duty Administrative Review,* 72 FR 58642 (October 16, 2007). Because the AFA rate of 44.36 percent in this review was corroborated in the LTFV investigation and the immediately preceding administrative review of Terphane, and no information in the current review calls into question the reliability of this rate, we find the AFA rate of 44.36 percent is reliable. *See Notice of Preliminary Determination of Sales at Less Than Fair Value: Polyethylene Terephthalate Film, Sheet, and Strip from Brazil,* 73 FR 24560 (May 5, 2008), unchanged in *Final Determination.*

With respect to the relevance aspect of corroboration, the Department will consider information reasonably at its disposal to determine whether a margin continues to have relevance. Where circumstances indicate that the selected margin is not appropriate as AFA, the Department will disregard the margin and determine an appropriate margin. For example, in *Fresh Cut Flowers From Mexico; Final Results of Antidumping Duty Administrative Review,* 61 FR 6812, 6814 (February 22, 1996), the Department disregarded the highest margin in that case as best information available (the predecessor to facts available), because the margin was based on another company's uncharacteristic business expense resulting in an unusually high margin. Similarly, the Department does not apply a margin that has been discredited or judicially invalidated. *See D & L Supply Co.* v. *United States,* 113 F.3d 1220, 1221 (Fed. Cir. 1997).

In this review, there are no circumstances present to indicate that the selected margin is not appropriate as AFA. The margin we have selected is the margin we determined for Terphane in the LTFV investigation and represents the highest margin alleged in the petition. This is also the margin we assigned to Terphane in the immediately preceding administrative review. Moreover, because Terphane refused to respond to the Department's questionnaire, there is no information on the record of this review that demonstrates that 44.36 percent is not an appropriate AFA rate for Terphane. Thus, the Department considers this dumping margin relevant for the use of AFA for this administrative review.

As the AFA rate is both reliable and relevant, we find it has probative value. Therefore, with the information at our disposal for the corroboration of this AFA rate, we find the rate of 44.36 percent is corroborated to the extent practicable in accordance with section 776(c) of the Act. We preliminarily find that use of the rate of 44.36 percent as AFA is sufficiently high to ensure that Terphane does not benefit from failing to cooperate in our review by choosing not to respond to the Department's antidumping questionnaire and otherwise participate in the Department's administrative review.

Preliminary Results of Review

We preliminarily determine that the following antidumping duty margin exists for the period November 1, 2009, through October 31, 2010:

Producer/Exporter	Margin (percent)
Terphane, Inc.	44.36

Disclosure and Public Comment

Interested parties may submit case briefs no later than 30 days after the date of publication of these preliminary results of review. *See* 19 CFR 351.309(c)(1)(ii). Rebuttal briefs, limited to issues raised in the case briefs, may be filed no later than five days after the time limit for filing the case briefs. *See* 19 CFR 351.309(d)(1). Parties who submit case or rebuttal briefs in this proceeding are requested to submit with each argument a statement of the issue. Parties are also encouraged to provide a summary of the arguments not to exceed five pages and a table of statutes, regulations, and cases cited. *See* 19 CFR 351.309(c)(2). Furthermore, the Department requests that parties provide the public versions of their case and rebuttal briefs in electronic format (*e.g.,* Microsoft Word, .pdf, *etc.*).

Interested parties who wish to request a hearing or to participate if one is requested must submit a written request to the Assistant Secretary for Import Administration within 30 days of publication of these preliminary results. *See* 19 CFR 351.310(c). Requests should contain the following information: (1) The party's name, address, and telephone number; (2) the number of participants; and (3) a list of the issues to be discussed. Issues raised in the hearing will be limited to those raised in the case and rebuttal briefs. Any hearing, if requested, will be held 37 days after the date of publication, or the first business day thereafter, unless the Department alters the date pursuant to 19 CFR 351.310(d)(1).

The Department intends to issue the final results of this administrative review, which will include the results of its analysis of issues raised in any such comments, within 120 days of publication of these preliminary results, pursuant to section 751(a)(3)(A) of the Act.

Assessment Rates

Upon issuance of the final results, the Department will determine, and CBP shall assess, antidumping duties on all appropriate entries. We preliminarily intend to instruct CBP to apply a dumping margin of 44.36 percent *ad valorem* to PET film from Brazil that was produced and/or exported by Terphane and entered, or withdrawn from warehouse, for consumption during the POR. The Department intends to issue appropriate assessment instructions directly to CBP 15 days after the date of publication of the final results of this review.

Cash Deposit Requirements

The following cash deposit requirements will be effective upon publication of the notice of final results of administrative review for all shipments of the subject merchandise entered, or withdrawn from warehouse, for consumption on or after the publication date of the final results, as provided by section 751(a)(2)(C) of the Act: (1) The cash deposit rate for Terphane will be the rate established in the final results of this review; (2) for other previously reviewed or investigated companies, the cash deposit rate will continue to be the company-specific rate published for the most recent period; (3) if the exporter is not a firm covered in this review or the LTFV investigation but the manufacturer is, the cash deposit rate will be the rate established for the most recent period for the manufacturer of the merchandise; (4) if neither the exporter nor the manufacturer has its own rate, the cash deposit rate will be 28.72 percent, the all-others rate established in the *Final Determination.* These cash deposit requirements, when imposed, shall remain in effect until further notice.

Notification to Importers

This notice also serves as a preliminary reminder to importers of their responsibility under 19 CFR 351.402(f)(2) to file a certificate regarding the reimbursement of antidumping duties prior to liquidation of the relevant entries during this review period. Failure to comply with this requirement could result in the Secretary's presumption that reimbursement of antidumping duties occurred and the subsequent assessment of double antidumping duties.

These preliminary results of administrative review are issued and published in accordance with sections 751(a)(1) and 777(i)(1) of the Act.

Dated: July 29, 2011.

Ronald K. Lorentzen,

Deputy Assistant Secretary for Import Administration.

[FR Doc. 2011–20072 Filed 8–5–11; 8:45 am]

BILLING CODE 3510–DS–P

DEPARTMENT OF COMMERCE

International Trade Administration

[A–475–818]

Certain Pasta From Italy: Notice of Preliminary Results of Antidumping Duty Administrative Review

AGENCY: Import Administration, International Trade Administration, Department of Commerce.

SUMMARY: In response to requests by interested parties, the Department of Commerce (''the Department'') is conducting an administrative review of the antidumping duty order on certain pasta (''pasta'') from Italy for the period of review (''POR'') July 1, 2009, through June 30, 2010. This review covers two producers/exporters of subject merchandise: Molino e Pastificio Tomasello S.p.A. (''Tomasello'') and Pastificio Lucio Garofalo S.p.A. (''Garofalo''). We preliminarily determine that during the POR, Tomasello and Garofalo sold subject merchandise at less than normal value (''NV''). If these preliminary results are adopted in the final results of this administrative review, we will instruct U.S. Customs and Border Protection (''CBP'') to assess antidumping duties on all appropriate entries of subject merchandise during the POR. Interested

parties are invited to comment on these preliminary results.

DATES: *Effective Date:* August 8, 2011.

FOR FURTHER INFORMATION CONTACT: Joy Zhang or George McMahon AD/CVD Operations, Office 3, Import Administration, International Trade Administration, U.S. Department of Commerce, 14th Street and Constitution Avenue, NW., Washington, DC 20230; telephone: (202) 482–1168 or (202) 482–1167, respectively.

SUPPLEMENTARY INFORMATION:

Background

On July 24, 1996, the Department published in the **Federal Register** the antidumping duty order on pasta from Italy.[1] On July 1, 2010, the Department published a notice of opportunity to request an administrative review of the antidumping duty order on certain pasta from Italy.[2] Pursuant to requests from interested parties,[3] the Department published in the **Federal Register** the notice of initiation of this antidumping duty administrative review with respect to the following companies for the period July 1, 2009, through June 30, 2010: Agritalia S.r.L. (''Agritalia''), Domenico Paone fu Erasmo S.p.A. (''Erasmo''), Industria Alimentare Colavita, S.p.A. (''Indalco''), Labor S.r.L. (''Labor''), Molino e Pastificio Tomasello, S.p.A. (''Tomasello''), PAM S.p.A. and its affiliate, Liguori Pastificio dal 1820 SpA (''PAM''), P.A.P. SNC Di Pazienza G.B. & C. (''P.A.P.''), Premiato Pastificio Afeltra S.r.L. (''Afeltra''), Pasta Zara SpA (''Zara''), Pastificio Di Martino Gaetano & F.lli SpA (''Di Martino''), Pastificio Fabianelli S.p.A. (''Fabianelli''), Pastificio Felicetti SrL (''Felicetti''), Pastificio Lucio Garofalo S.p.A. (''Garofalo''), Pastificio Riscossa F.lli Mastromauro S.p.A. (''Riscossa''), Rummo S.p.A. Molino e Pastificio (''Rummo''), and Rustichella d'Abruzzo S.p.A (''Rustichella'').[4]

On September 13, 2010, the Department announced its intention to select mandatory respondents based on CBP data.[5] On October 10, 2010, the Department selected Garofalo and Tomasello as mandatory respondents.[6] On November 12, 2010, Afeltra, Agritalia, Di Martino, Felicetti, Labor, PAM, Erasmo, P.A.P., Riscossa, Rustichella, and Zara (collectively ''certain non-mandatory respondents'') requested that the Department extend the deadline to withdraw from the instant review for 45 days. The Department declined this request to modify the 90-day deadline for parties to withdraw their requests for review. *See* the Department's letter to David L. Simon, counsel for the certain non-mandatory respondents, dated November 24, 2010. On November 29, 2010, Di Martino, Felicetti, and Zara withdrew its request for a review.

As a result of withdrawals of request for review, we rescinded this review, in part, with respect to Di Martino, Felicetti, and Zara.[7] The instant review continues with respect to Agritalia, Erasmo, Indalco, Labor, Tomasello, PAM, P.A.P., Afeltra, Fabianelli, Garofalo, Riscossa, Rummo, and Rustichella. *Id.* As referenced above, Garofalo and Tomasello were selected as mandatory respondents.

Between October 2010 and July 2011, the Department issued its initial questionnaire[8] and supplemental questionnaires to each respondent, as applicable. The Department issued Section D to Garofalo and Tomasello because we disregarded sales by these companies that were below the COP in the most recently completed administrative review of each respective company. We received responses to the Department's initial questionnaire on December 10, 2010 and December 20, 2010, from Garofalo. We received responses to the Department's initial questionnaire on December 10, 2010 from Tomasello. We issued section A, B, C, and D supplemental questionnaires, to which Garofalo and Tomasello responded during December 2010, February, March, April, May and July 2011.

On February 28, 2011, the Department fully extended the due date for the preliminary results of review from April 2, 2011, to August 1, 2011.[9]

The Department conducted the sales verification of Tomasello from June 6, 2011, through June 10, 2011, in Casteldaccia, Italy. The Department conducted the cost verification of Tomasello from June 13, 2011, through June 17, 2011, in Casteldaccia, Italy. We verified the information upon which we relied in making our preliminary determination.

Scope of the Order

Imports covered by this order are shipments of certain non-egg dry pasta in packages of five pounds four ounces or less, whether or not enriched or fortified or containing milk or other optional ingredients such as chopped vegetables, vegetable purees, milk, gluten, diastasis, vitamins, coloring and flavorings, and up to two percent egg white. The pasta covered by this scope is typically sold in the retail market, in fiberboard or cardboard cartons, or polyethylene or polypropylene bags of varying dimensions.

Excluded from the scope of this order are refrigerated, frozen, or canned pastas, as well as all forms of egg pasta, with the exception of non-egg dry pasta containing up to two percent egg white. Also excluded are imports of organic pasta from Italy that are accompanied by the appropriate certificate issued by the Instituto Mediterraneo Di Certificazione, by QC&I International Services, by Ecocert Italia, by Consorzio per il Controllo dei Prodotti Biologici, by Associazione Italiana per l'Agricoltura Biologica, by Codex S.r.L., by Bioagricert S.r.L., or by Instituto per la Certificazione Etica e Ambientale. Effective July 1, 2008, gluten free pasta is also excluded from this order. *See Certain Pasta from Italy: Notice of Final Results of Antidumping Duty Changed Circumstances Review and Revocation, in Part,* 74 FR 41120 (August 14, 2009).

The merchandise subject to this order is currently classifiable under items 1902.19.20 and 1901.90.9095 of the *Harmonized Tariff Schedule of the United States* (''HTSUS''). Although the *HTSUS* subheadings are provided for convenience and customs purposes, the written description of the merchandise subject to the order is dispositive.

Product Comparisons

In accordance with section 771(16) of the Tariff Act of 1930, as amended (''the Act''), we first attempted to match contemporaneous sales of products sold

[1] *See Notice of Antidumping Duty Order and Amended Final Determination of Sales at Less Than Fair Value: Certain Pasta From Italy,* 61 FR 38547 (July 24, 1996).

[2] *See Antidumping or Countervailing Duty Order, Finding, or Suspended Investigation; Opportunity To Request Administrative Review,* 75 FR 38074 (July 1, 2010).

[3] The petitioners include New World Pasta Company, Dakota Growers Pasta Company and American Italian Pasta Company (collectively, ''Petitioners'').

[4] *See Initiation of Antidumping and Countervailing Duty Administrative Reviews and Deferral of Initiation of Administrative Review,* 75 FR 53274, (August 31, 2010) (''*Initiation Notice*'').

[5] *See* Memorandum from Christopher Hargett to Melissa Skinner titled ''Customs and Border Protection Data for Selection of Respondents for Individual Review,'' dated September 13, 2010.

[6] *See* Memorandum from Christopher Hargett to Melissa Skinner titled ''Selection of Respondents for Individual Review,'' dated October 10, 2010.

[7] *See Certain Pasta from Italy: Notice of Partial Rescission of Antidumping Duty Administrative Review,* 76 FR 23973 (April 29, 2011) (''*Partial Rescission Notice*'').

[8] The antidumping duty questionnaire issued to respondents includes Section A (*i.e.,* the section covering general information about the company) of the antidumping duty questionnaire, Section B (*i.e.,* the section covering comparison market sales), Section C (*i.e.,* the section covering U.S. sales), and Section D (*i.e.,* the section covering the cost of production (''COP'') and constructed value (''CV'')).

[9] *See Certain Pasta From Italy: Extension of Time Limits for the Preliminary Results of Fourteenth Antidumping Duty Administrative Review,* 76 FR 10879 (February 28, 2011).

in the United States and comparison markets that were identical with respect to the following characteristics: (1) Pasta shape; (2) wheat species; (3) milling form; (4) protein content; (5) additives; and (6) enrichment. When there were no sales of identical merchandise in the comparison market to compare with U.S. sales, we compared U.S. sales with the most similar product based on the characteristics listed above, in descending order of priority. When there were no appropriate comparison market sales of comparable merchandise, we compared the merchandise sold in the United States to CV, in accordance with section 773(a)(4) of the Act.

For purposes of the preliminary results, where appropriate, we have calculated the adjustment for differences in merchandise based on the difference in the variable cost of manufacturing (''VCOM'') between each U.S. model and the most similar home market model selected for comparison.

Comparisons to Normal Value

To determine whether sales of certain pasta from Italy were made in the United States at less than NV, we compared the export price (''EP'') of each sale to the NV, as described in the ''Export Price'' and ''Normal Value'' sections of this notice.

Pursuant to sections 773(a)(1)(B)(i) and 777A(d)(2) of the Act, for Tomasello and Garofalo, we compared the EPs of individual transactions, as applicable, to the weighted-average NV of the foreign like product in the appropriate corresponding calendar month where there were sales made in the ordinary course of trade, as discussed in the ''Cost of Production Analysis'' section below.

Export Price

For the price to the United States, we used export price, as defined in section 772(a) of the Act. Section 772(a) defines EP as the price at which the subject merchandise is first sold before the date of importation by the producer or exporter of subject merchandise outside of the United States to an unaffiliated purchaser in the United States or to an unaffiliated purchaser for exportation to the United States. We calculated an EP for Tomasello's and Garofalo's U.S. sales because they were made directly to the first unaffiliated purchasers in the United States prior to importation and constructed export price (''CEP'') was not otherwise warranted based on the facts on the record.

For EP sales, we made deductions from the starting price (gross unit price), where appropriate, for movement expenses in accordance with section 772(c)(2) of the Act. Movement expenses included foreign inland freight (from plant or warehouse, and from plant to port of exportation), foreign warehousing expenses, foreign brokerage, international freight, U.S. brokerage and handling and charges, and U.S. customs duties. With respect to Tomasello, we capped the transportation recovery amounts by the amount of U.S. freight expenses, incurred on the subject merchandise, in accordance with our practice. *See Certain Orange Juice from Brazil: Final Results and Partial Rescission of Antidumping Duty Administrative Review,* 73 FR 46584 (August 11, 2008), and accompanying Issues and Decision Memorandum (''2005–2007 OJ from Brazil'') at Comment 7.

In addition, when appropriate, we increased EP by an amount equal to the countervailing duty (''CVD'') rate attributed to export subsidies in the most recently completed CVD administrative review, in accordance with section 772(c)(1)(C) of the Act.

Normal Value

A. Selection of Comparison Markets

Section 773(a)(1) of the Act directs that NV be based on the price of the foreign like product sold in the home market, provided that the merchandise is sold in sufficient quantities (or value, if quantity is inappropriate) and that there is no particular market situation that prevents a proper comparison with the export price or constructed export price. The statute contemplates that quantities (or value) normally be considered insufficient if they are less than five percent of the aggregate quantity (or value) of sales of the subject merchandise to the United States. To determine whether there was a sufficient volume of sales in the home market to serve as a viable basis for calculating NV, we compared each respondent's volume of home market sales of the foreign like product to the volume of its U.S. sales of the subject merchandise. Pursuant to section 773(a)(1)(B) of the Act, because Garofalo and Tomasello each had an aggregate volume of home market sales of the foreign like product that was greater than five percent of its aggregate volume of U.S. sales of the subject merchandise, we determined that the home market was viable for both Garofalo and Tomasello.

Ordinary Course of Trade

On January 14, 2011, petitioners submitted comments alleging that a ''particular market situation'' existed with respect to sales made in Italy by Garofalo. In petitioners' April 13, 2011, comments, petitioners stated that they withdraw their January 14 allegation of a particular market situation, under the stipulation that the Department conduct an analysis for the alleged aberrational home market sales under the ordinary course of trade provision of the statute. *See* petitioners' April 13, 2011, comments at 2–3, footnote 1. We have examined Garofalo's sales within the context of the ordinary course of trade provision; therefore, we are not addressing the ''particular market situation'' allegation that petitioners withdrew.

Petitioners argue that Garofalo's sales of pasta in Italy with a protein content of less than 12.5 percent should be excluded from the calculation of normal value because petitioners allege that they are sales that are outside the ordinary course of trade. Petitioners claim that these sales have unusual product specifications, aberrational prices and unusual terms of sale. *Id.* at 2. We have considered the comments submitted by petitioners and Garofalo. Based on our analysis of Garofalo's home market sales data and the comments submitted on the record, we find Garofalo's home market sales to be within the ordinary course of trade. Because the discussion of this issue contains business proprietary information (''BPI''), *see* memorandum from the Team through Melissa Skinner, Director, Office 3, to Christian Marsh, Deputy Assistant Secretary for Antidumping and Countervailing Duty Operations, titled, ''Analysis Memorandum for the Preliminary Results of the Fourteenth Administrative Review of the Antidumping Duty Order on Certain Pasta from Italy (2009–2010)'' for additional details.

B. Arm's-Length Sales

Garofalo reported that all of its sales to the Italian market are to unaffiliated customers; however, it made a few sales to employees and shareholders and coded such sales as affiliated sales. *See* Garofalo's Section B Questionnaire Response, dated December 20, 2010, at page B–11. In accordance with the Department's practice, we have excluded such sales from consideration. *See* Garofalo's Prelim Sales Analysis Memorandum, dated August 1, 2011.

C. Cost of Production Analysis

Because we disregarded below-cost sales in the most recently completed segment of the proceeding, we had reasonable grounds to believe or suspect that home market sales of the foreign

like product by the respondents were made at prices below the COP during the POR, in accordance with section 773(b)(2)(A)(ii) of the Act. Therefore, we required Garafalo and Tomasello to submit a response to Section D of the Department's questionnaire. The Department disregarded sales below the COP in the last completed review in which Garofalo and Tomasello participated.[10]

1. Calculation of COP

In accordance with section 773(b)(3) of the Act, we calculated the weighted-average COP by model based on the sum of materials, fabrication, general and administrative (''G&A''), and interest expenses. We relied on the COP data submitted by both Garofalo and Tomasello except the following adjustments. We increased Garofalo's cost of manufacturing (''COM'') to account for the unreconciled difference between the COM from its normal books and records and the reported COM. For more details, *see* Memorandum from James Balog to Neal M. Halper, Director of Office of Accounting, titled ''Cost of Production and Constructed Value Calculation Adjustments for the Preliminary Results—Pastificio Lucio Garofalo S.p.A,'' dated August 1, 2011. Also, we have increased Tomasello's reported direct materials and conversion costs to incorporate a revised yield loss ratio resulting from a revised total production quantity for finished pasta products. For additional details, *see* Memorandum from Stephanie Arthur to Neal M. Halper, Director of Office of Accounting, titled ''Cost of Production and Constructed Value Calculation Adjustments for the Preliminary Results—Molino e Pastificio Tomasello, S.p.A.,'' dated August 1, 2011.

Based on the review of record evidence, Garofalo and Tomasello did not appear to experience significant changes in COM during the POR. Therefore, we followed our normal methodology of calculating an annual weighted-average cost.

2. Test of Comparison Market Prices

We compared the weighted-average COPs for the respondents to their home market sales prices of the foreign like product, as required under section 773(b) of the Act, to determine whether these sales had been made at prices below the COP within an extended period of time (*i.e.,* normally a period of one year) in substantial quantities and whether such prices were sufficient to permit the recovery of all costs within a reasonable period of time. On a model-specific basis, we compared the COP to the home market prices, less any applicable movement charges, discounts, rebates, and direct and indirect selling expenses.

3. Results of COP Test

We disregard below-cost sales where: (1) 20 percent or more of the respondent's sales of a given product during the POR were made at prices below the COP in accordance with sections 773(b)(2)(B) and (C) of the Act; and (2) based on comparisons of price to weighted-average COPs for the POR, we determine that the below-cost sales of the product were at prices that would not permit recovery of all costs within a reasonable time period, in accordance with section 773(b)(2)(D) of the Act. We found that Tomasello and Garofalo made sales below cost and we disregarded such sales where appropriate. *See* Tomasello and Garofalo Prelim Cost Memorandum.

D. Calculation of Normal Value Based on Comparison Market Prices

We calculated NV based on ex-works, free on board (''FOB'') or delivered prices to comparison market customers. We made deductions from the starting price, when appropriate, for discounts and rebates. We deducted home market packing costs and added U.S. packing costs, in accordance with sections 773(a)(6)(A) and (B) of the Act. We also deducted home market movement expenses pursuant to section 773(a)(6)(B) of the Act. In addition, we made adjustments for differences in circumstances of sale (''COS'') pursuant to section 773(a)(6)(C)(iii) of the Act. Specifically, we made adjustments to normal value for comparison to Tomasello's and Garofalo's EP transactions by deducting direct selling expenses incurred for home market sales (*i.e.,* credit expenses) and adding U.S. direct selling expenses (*i.e.,* credit expenses) and U.S. commissions. *See* section 773(a)(6)(C)(iii) of the Act, and 19 CFR 351.410(c). We also made adjustments for Garofalo and Tomasello, in accordance with 19 CFR 351.410(e), for indirect selling expenses incurred in the home market or the United States where commissions were granted on sales in one market but not in the other, the ''commission offset.'' Specifically, where commissions are incurred in one market, but not in the other, we will limit the amount of such allowance to the amount of either the selling expenses incurred in the one market or the commissions allowed in the other market, whichever is less.

When comparing U.S. sales with comparison market sales of similar, but not identical, merchandise, we also made adjustments for physical differences in the merchandise in accordance with section 773(a)(6)(C)(ii) of the Act and 19 CFR 351.411. We based this adjustment on the difference in the VCOM for the foreign like product and subject merchandise, using weighted-average costs.

Sales of pasta purchased by Garofalo from unaffiliated producers and resold in the comparison market were disregarded. *See* Garofalo Sales Analysis Memo.

E. Level of Trade

In accordance with section 773(a)(1)(B) of the Act, we determine NV based on sales in the comparison market at the same level of trade (''LOT'') as the EP and CEP sales, to the extent practicable. When there are no sales at the same LOT, we compare U.S. sales to comparison market sales at a different LOT. When NV is based on CV, the NV LOT is that of the sales from which we derive SG&A expenses and profit.

Pursuant to 19 CFR 351.412(c)(2), to determine whether comparison market sales were at a different LOT, we examine stages in the marketing process and selling functions along the chain of distribution between the producer and the unaffiliated (or arm's-length affiliated) customers. The Department identifies the LOT based on: The starting price or constructed value (for normal value); the starting price (for EP sales); and the starting price, as adjusted under section 772(d) of the Act (for CEP sales). If the comparison-market sales were at a different LOT and the differences affect price comparability, as manifested in a pattern of consistent price differences between the sales on which NV is based and comparison-market sales at the LOT of the export transaction, we will make a LOT adjustment under section 773(a)(7)(A) of the Act.

Finally, if the NV LOT is more remote from the factory than the CEP LOT and there is no basis for determining whether the differences in LOT between

[10] *See Certain Pasta From Italy: Notice of Amended Final Results of the Thirteenth Antidumping Duty Administrative Review,* 76 FR 6601, February 7, 2011 (''Pasta Thirteen''); *see also Notice of Preliminary Results and Partial Rescission of Antidumping Duty Administrative Review and Intent Not to Revoke in Part: For the Sixth Administrative Review of the Antidumping Duty Order on Certain Pasta from Italy,* 68 FR 47020, 47029, August 7, 2003, and *Notice of Final Results and Partial Rescission of Antidumping Duty Administrative Review of the Antidumping Duty Order on Certain Pasta from Italy and Determination Not to Revoke in Part,* 69 FR 6255, February 10, 2004.

NV and CEP affected price comparability, we will grant a CEP offset, as provided in section 773(a)(7)(B) of the Act. *See Notice of Final Determination of Sales at Less Than Fair Value: Certain Cut-to-Length Carbon Steel Plate from South Africa,* 62 FR 61731, 61732–33 (November 19, 1997).

Tomasello indicated there was a single level of trade for all sales in both markets, and petitioner has not claimed that multiple levels of trade existed for Tomasello. Tomasello provided information regarding channels of distribution and selling activities performed for different categories of customers. *See* Tomasello's December 10, 2010, Section A response, at Exhibit 4. Tomasello's chart of specific selling functions indicates the selling functions performed for sales in both markets are virtually identical, with no significant variation across the broader categories of sales process/marketing support, freight and delivery, inventory and warehousing, and quality assurance/warranty services. For more details, *see* Tomasello Preliminary Analysis Memorandum. We have preliminarily determined there is one single level of trade for all sales in both the home market and the U.S. market and, therefore, that no basis exists for a level of trade adjustment.

Garofalo reported that it sells to one LOT in the home market. In the home market, Garofalo reported that it sold through three channels of distribution to four customer categories. Garofalo provided information regarding its selling functions and channels of distribution by customer category. *See* Garofalo's Supplemental Questionnaire response, dated June 28, 2011, at Exhibit SS–1.

In the U.S. market, Garofalo reported that it sold through two channels of distribution to one customer category, and therefore, at one LOT. Garofalo claims that it sold to a different level of trade in the United States than it does in Italy and reported a separate code for its LOT in its U.S. sales database. Based on our analysis of the selling activities for Garofalo, we find that Garofalo's selling functions performed for sales in both markets are comparable and do not show a significant pattern of variation across the sales categories. Furthermore, we find that there is overlap in these activities for channels of distribution and customer categories. Garofalo performs similar selling activities for the reported customer categories and channels of distribution. Although there are differences in intensity of these activities for some of the claimed customer categories, this, in and of itself, does not show a substantial difference in selling activities that would form the basis for finding a different LOT. *See, e.g., Certain Frozen Warmwater Shrimp from Ecuador: Final Results of Antidumping Duty Administrative Review,* 72 FR 52070 (September 12, 2007), and accompanying Issues and Decision Memorandum at Comment 4. Due to the proprietary nature of this issue, please refer to Garofalo's Sales Analysis Memo for further discussion.

We have preliminarily determined there is one single level of trade for all sales in both the home market and the U.S. market and, therefore, that no basis exists for a level of trade adjustment.

Currency Conversion

For purposes of these preliminary results, we made currency conversions in accordance with section 773A(a) of the Act, based on the official exchange rates published by the Federal Reserve Bank. *See* Garofalo's Sales Analysis Memo; *see also* Tomasello Sales Analysis Memo.

Preliminary Results of Review

As a result of our review, we preliminarily determine that the following weighted-average percentage margins exist for the period July 1, 2009, through June 30, 2010:

Manufacturer/exporter	Margin (percent) [11]
Garofalo	3.20
Tomasello	4.18
Review-Specific Average Rate [12] Applicable to the Following Companies: Agritalia, Erasmo, Indalco, Labor, PAM, P.A.P., Afeltra, Fabianelli, Riscossa, Rummo, and Rustichella	3.57

The Department intends to disclose the calculations performed for these preliminary results within five days of the date of publication of this notice to the parties of this proceeding, in accordance with 19 CFR 351.224(b). An interested party may request a hearing within 30 days of publication of these preliminary results. *See* 19 CFR 351.310(c).

Pursuant to 19 CFR 351.213(h), the Department intends to issue the final results of this administrative review, which will include the results of its analysis of issues raised in any such comments, or at a hearing, if requested, within 120 days of publication of these preliminary results.

Assessment Rate

Pursuant to 19 CFR 351.212(b), the Department calculated an assessment rate for each importer of the subject merchandise. Upon issuance of the final results of this administrative review, if any importer-specific assessment rates calculated in the final results are above *de minimis* (*i.e.,* at or above 0.5 percent), the Department will issue appraisement instructions directly to CBP to assess antidumping duties on appropriate entries by applying the assessment rate to the entered value of the merchandise. For assessment purposes, we calculated importer-specific assessment rates for the subject merchandise by aggregating the dumping margins for all U.S. sales to each importer and dividing the amount by the total entered value of the sales to that importer. Where appropriate, to calculate the entered value, we subtracted international movement expenses (*e.g.,* international freight) from the gross sales value.

The Department clarified its ''automatic assessment'' regulation on May 6, 2003 (68 FR 23954). This clarification will apply to entries of subject merchandise during the POR produced by companies included in these preliminary results of review for which the reviewed companies did not know their merchandise was destined for the United States. In such instances, we will instruct CBP to liquidate unreviewed entries at the all-others rate if there is no rate for the intermediate company(ies) involved in the transaction. For a full discussion of this clarification, *see Antidumping and Countervailing Duty Proceedings: Assessment of Antidumping Duties,* 68 FR 23954 (May 6, 2003).

Cash Deposit Requirements

To calculate the cash deposit rate for Tomasello and Garofalo, we divided its total dumping margin by the total net value of its sales during the review period.

The following deposit rates will be effective upon publication of the final results of this administrative review for all shipments of pasta from Italy entered, or withdrawn from warehouse, for consumption on or after the

[11] The antidumping duty margin for Tomasello incorporates an adjustment for the countervailing duty offset to account for the export subsidy portion of the countervailing duties applied to this company, which Tomasello reported in the field CVDU.

[12] This rate is a weighted-average percentage margin (calculated based on the publicly ranged U.S. Values of the two reviewed companies with an affirmative dumping margin) for the period July 1, 2009, through June 30, 2010. *See* Memorandum to the File, titled, ''Pasta from Italy: Margin for Respondents Not Selected for Individual Examination,'' from Joy Zhang and George McMahon, Case Analysts, through James Terpstra, Program Manager, dated August 1, 2011.

publication date, as provided by section 751(a)(2)(C) of the Act: (1) The cash deposit rate for companies subject to this review will be the rate established in the final results of this review, except if the rate is less than 0.5 percent and, therefore, *de minimis,* no cash deposit will be required; (2) for previously reviewed or investigated companies not listed above, the cash deposit rate will continue to be the company-specific rate published for the most recent final results for a review in which that manufacturer or exporter participated; (3) if the exporter is not a firm covered in this review, a prior review, or the original less-than-fair-value (''LTFV'') investigation, but the manufacturer is, the cash deposit rate will be the rate established for the most recent final results for the manufacturer of the merchandise; and (4) if neither the exporter nor the manufacturer is a firm covered in this or any previous review conducted by the Department, the cash deposit rate will be 15.45 percent, the all-others rate established in the LTFV investigation. *See Implementation of the Findings of the WTO Panel in US—Zeroing (EC): Notice of Determination Under Section 129 of the Uruguay Round Agreements Act and Revocations and Partial Revocations of Certain Antidumping Duty Orders,* 72 FR 25261 (May 4, 2007). These cash deposit requirements, when imposed, shall remain in effect until further notice.

Notification to Importers

This notice serves as a preliminary reminder to importers of their responsibility under 19 CFR 351.402(f) to file a certificate regarding the reimbursement of antidumping duties prior to liquidation of the relevant entries during this review period. Failure to comply with this requirement could result in the Secretary's presumption that reimbursement of antidumping duties occurred and increase the subsequent assessment of the antidumping duties by the amount of antidumping duties reimbursed.

These preliminary results of administrative review are issued and published in accordance with sections 751(a)(1) and 777(i)(1) of the Act and 19 CFR 351.221(b)(4).

Dated: August 1, 2011.

Ronald K. Lorentzen,

Deputy Assistant Secretary for Import Administration.

[FR Doc. 2011–20067 Filed 8–5–11; 8:45 am]

BILLING CODE 3510–DS–P

DEPARTMENT OF COMMERCE

International Trade Administration

Southern Illinois University, et al.; Notice of Decision on Applications for Duty-Free Entry of Scientific Instruments

This is a decision pursuant to Section 6(c) of the Educational, Scientific, and Cultural Materials Importation Act of 1966 (Pub. L. 89–651, as amended by Pub. L. 106–36; 80 Stat. 897; 15 CFR part 301). Related records can be viewed between 8:30 a.m. and 5 p.m. in Room 3720, U.S. Department of Commerce, 14th and Constitution Ave., NW., Washington, DC 20230.

Comments: None received. *Decision:* Approved. *Reasons:* We know of no instruments of equivalent or comparable scientific value to the foreign instruments described below, for the intended purposes, that were being manufactured in the United States at the time of their order.

Docket Number: 11–032. *Applicant:* Southern Illinois University, Integrated Microscopy and Graphic Expertise (IMAGE) Center, 750 Communications Drive—Mailcode 4402, Carbondale, IL 62901. Instrument: Quanta 450 scanning electron microscope. Manufacturer: FEI Company, Czech Republic. *Intended Use:* See application notice at 76 FR 39070, July 5, 2011.

Docket Number: 11–037. *Applicant:* Tulane University, 6823 St. Charles Avenue, New Orleans, LA 70118. *Instrument:* Field-emission transmission electron microscope. *Manufacturer:* FEI Company, the Netherlands. *Intended Use:* See application notice at 76 FR 39070, July 5, 2011.

Docket Number: 11–038. *Applicant:* Battelle Memorial Institute, Pacific Northwest National Laboratory, 3335 Q Avenue, Richland, WA 99354. *Instrument:* Scanning transmission electron microscope. *Manufacturer:* FEI Company, the Netherlands. *Intended Use:* See application notice at 76 FR 39070, July 5, 2011.

Dated: July 28, 2011.

Supriya Kumar,

Acting Director, Subsidies Enforcement Office, Office of Policy, Import Administration.

[FR Doc. 2011–19932 Filed 8–5–11; 8:45 am]

BILLING CODE 3510–DS–P

DEPARTMENT OF COMMERCE

International Trade Administration

[C–475–819]

Certain Pasta From Italy: Preliminary Results of the 14th (2009) Countervailing Duty Administrative Review

AGENCY: Import Administration, International Trade Administration, Department of Commerce.

SUMMARY: The Department of Commerce (''Department'') is conducting an administrative review of the countervailing duty order on certain pasta from Italy for the period January 1, 2009, through December 31, 2009. We preliminarily find that Molino e Pastificio Tomasello S.p.A. (''Tomasello'') and Pastificio Antonio Pallante S.r.L. (''Pallante'') received countervailable subsidies and that F.lli De Cecco di Filippo Fara San Martino S.p.A. (''De Cecco'') received *de minimis* countervailable subsidies. We also find that Pastificio Fabianelli S.p.A. (''Fabianelli'') received countervailable subsidies that were expensed prior to 2009 and did not confer any benefit to Fabianelli during the period of review (''POR''). *See* the ''Preliminary Results of Review'' section of this notice below. Interested parties are invited to comment on these preliminary results. *See* the ''Disclosure and Public Comment'' section of this notice below.

DATES: *Effective Date:* August 8, 2011.

FOR FURTHER INFORMATION CONTACT: Mahnaz Khan or Christopher Siepmann, AD/CVD Operations, Office 1, Import Administration, U.S. Department of Commerce, 14th Street and Constitution Avenue, NW., Washington, DC 20230; *telephone:* (202) 482–0914 and (202) 482–7958, respectively.

SUPPLEMENTARY INFORMATION:

Background

On July 24, 1996, the Department published a countervailing duty order on certain pasta (''pasta'' or ''subject merchandise'') from Italy. *See Notice of Countervailing Duty Order and Amended Final Affirmative Countervailing Duty Determination: Certain Pasta From Italy,* 61 FR 38544 (July 24, 1996). On July 1, 2010, the Department published a notice of ''Opportunity to Request Administrative Review'' of this countervailing duty order for the POR corresponding to calendar year 2009. *See Antidumping or Countervailing Duty Order, Finding, or Suspended Investigation; Opportunity To Request Administrative Review,* 75 FR 38074 (July 1, 2010). On July 29,

2010, we received such a request from De Cecco. On July 31, 2010, we received a request from New World Pasta Company, American Italian Pasta Company, and Dakota Growers Pasta Company (''the petitioners''). In their request letter, the petitioners requested that the Department initiate a review on Pallante, Fabianelli, and Tomasello. In accordance with 19 CFR 351.221(c)(1)(i), we published a notice of initiation of this review on August 31, 2010. *See Initiation of Antidumping and Countervailing Duty Administrative Reviews and Deferral of Initiation of Administrative Review,* 75 FR 53274 (August 31, 2010).

On September 20, 2010, we issued countervailing duty questionnaires to the Commission of the European Union (''EU''), the Government of Italy (''GOI''), De Cecco, Fabianelli, Tomasello, and Pallante. We received responses to our questionnaires in November 2010. We issued supplemental questionnaires to De Cecco on February 10, and June 27, 2011, and we received responses to our supplemental questionnaires on February 18, April 5, and June 30, 2011. We issued supplemental questionnaires to Fabianelli on March 1, April 15, and May 17, 2011, and received responses to our supplemental questionnaires on March 30, May 16, and May 19, 2011. On March 1, and May 25, 2011, the Department issued supplemental questionnaires to Tomasello, and we received responses to our supplemental questionnaire on April 13, and June 24, 2011. We issued supplemental questionnaires to Pallante on March 3, June 27, and June 28, 2011, and received responses to our supplemental questionnaires on March 31, and June 30, 2011. We issued supplemental questionnaires to the GOI on March 16, May 12, June 17, June 28, and July 11, 2011, and received responses on April 15, June 13, July 1, and July 25, 2011.

Period of Review

The POR for which we are measuring subsidies is January 1, 2009, through December 31, 2009.

Scope of the Order

Imports covered by the order are shipments of certain non-egg dry pasta in packages of five pounds four ounces or less, whether or not enriched or fortified or containing milk or other optional ingredients such as chopped vegetables, vegetable purees, milk, gluten, diastasis, vitamins, coloring and flavorings, and up to two percent egg white. The pasta covered by the scope of the order is typically sold in the retail market, in fiberboard or cardboard cartons, or polyethylene or polypropylene bags of varying dimensions.

Excluded from the scope of the order are refrigerated, frozen, or canned pastas, as well as all forms of egg pasta, with the exception of non-egg dry pasta containing up to two percent egg white. Also excluded are imports of organic pasta from Italy that are accompanied by the appropriate certificate issued by the Instituto Mediterraneo Di Certificazione, Bioagricoop S.r.l., QC&I International Services, Ecocert Italila, Consorzio per il Controllo dei Prodotti Biologici, Associazione Italiana per l'Agricoltura Biologica, or Codex S.r.l. In addition, based on publicly available information, the Department has determined that, as of August 4, 2004, imports of organic pasta from Italy that are accompanied by the appropriate certificate issued by Bioagricert S.r.l. are also excluded from the order. *See* Memorandum from Eric B. Greynolds to Melissa G. Skinner, dated August 4, 2004, which is on file in the Department's CRU. In addition, based on publicly available information, the Department has determined that, as of March 13, 2003, imports of organic pasta from Italy that are accompanied by the appropriate certificate issued by Instituto per la Certificazione Etica e Ambientale are also excluded from the order. *See* Memorandum from Audrey Twyman to Susan Kuhbach, dated February 28, 2006, entitled ''Recognition of Instituto per la Certificazione Etica e Ambientale (ICEA) as a Public Authority for Certifying Organic Pasta from Italy,'' which is on file in the Department's CRU. Pursuant to the Department's May 12, 2011 changed circumstances review, effective January 1, 2009, gluten-free pasta is also excluded from the scope of the CVD order. *See Certain Pasta From Italy: Final Results of Countervailing Duty Changed Circumstances Review and Revocation, In Part,* 76 FR 27634 (May 12, 2011).

The merchandise subject to review is currently classifiable under items 1901.90.90.95 and 1902.19.20 of the Harmonized Tariff Schedule of the United States (''HTSUS''). Although the HTSUS subheadings are provided for convenience and customs purposes, the written description of the merchandise subject to the order is dispositive.

Scope Rulings

The Department has issued the following scope rulings to date:

(1) On August 25, 1997, the Department issued a scope ruling finding that multicolored pasta, imported in kitchen display bottles of decorative glass that are sealed with cork or paraffin and bound with raffia, is excluded from the scope of the antidumping and countervailing duty orders. *See* Memorandum from Edward Easton to Richard Moreland, dated August 25, 1997, which is on file in the CRU.

(2) On July 30, 1998, the Department issued a scope ruling finding that multipacks consisting of six one-pound packages of pasta that are shrink-wrapped into a single package are within the scope of the antidumping and countervailing duty orders. *See* Letter from Susan H. Kuhbach to Barbara P. Sidari, dated July 30, 1998, which is on file in the CRU.

(3) On May 24, 1999, the Department issued a final scope ruling finding that, effective October 26, 1998, pasta in packages weighing or labeled up to (and including) five pounds four ounces is within the scope of the antidumping and countervailing duty orders. *See* Memorandum from John Brinkmann to Richard Moreland, dated May 24, 1999, which is on file in the CRU.

(4) On April 27, 2000, the Department self-initiated an anti-circumvention inquiry to determine whether Pastificio Fratelli Pagani S.p.A.'s importation of pasta in bulk and subsequent repackaging in the United States into packages of five pounds or less constitutes circumvention with respect to the antidumping and countervailing duty orders on pasta from Italy pursuant to section 781(a) of the Tariff Act of 1930, as amended (''the Act''), and 19 CFR 351.225(b). *See Certain Pasta From Italy: Notice of Initiation of Anti-Circumvention Inquiry on the Antidumping and Countervailing Duty Orders,* 65 FR 26179 (May 5, 2000). On September 19, 2003, we published an affirmative finding of the anti-circumvention inquiry. *See Anti-Circumvention Inquiry of the Antidumping and Countervailing Duty Orders on Certain Pasta from Italy: Affirmative Final Determinations of Circumvention of Antidumping and Countervailing Duty Orders,* 68 FR 54888 (September 19, 2003).

Use of Facts Otherwise Available and Adverse Inferences

Sections 776(a)(1) and (2) of the Act, provide that the Department shall apply ''facts otherwise available'' if necessary information is not on the record or an interested party or any other person: (A) Withholds information that has been requested; (B) fails to provide information within the deadlines established, or in the form and manner requested by the Department, subject to subsections (c)(1) and (e) of section 782 of the Act; (C) significantly impedes a

proceeding; or (D) provides information that cannot be verified as provided by section 782(i) of the Act. Section 776(b) of the Act further provides that the Department may use an adverse inference in applying the facts otherwise available when a party has failed to cooperate by not acting to the best of its ability to comply with a request for information. The Department's practice when selecting an adverse rate from among the possible sources of information is to ensure that the result is sufficiently adverse ''as to effectuate the statutory purposes of the adverse facts available rule to induce respondents to provide the Department with complete and accurate information in a timely manner.'' *See Notice of Final Determination of Sales at Less than Fair Value: Static Random Access Memory Semiconductors From Taiwan,* 63 FR 8909, 8932 (February 23, 1998). The Department's practice also ensures ''that the party does not obtain a more favorable result by failing to cooperate than if it had cooperated fully.'' *See* Statement of Administrative Action accompanying the Uruguay Round Agreements Act, H.R. Doc. No. 103–316, vol. 1, at 870 (1994).

GOI—Previously Uninvestigated Programs

On April 13, 2011, Tomasello informed the Department that it received subsidies from the GOI under seven programs that were not reported in Tomasello's November 3, 2010 questionnaire response. Except for Law 46/1982,[1] it appeared that the Department had not previously investigated the countervailability of these programs in the *Pasta Investigation* or in subsequent reviews; therefore, on May 12, 2011, we asked the GOI to respond to the full questionnaire for all seven programs. We received its response on June 13, 2011, and discovered that it contained numerous deficiencies. The GOI failed to respond to most of our questions for all but one program. It also failed to provide the related law for four of the programs and did not translate one of the laws it did provide, despite our request to provide translated laws for each program. *See* 19 CFR 351.303(e). In addition, the GOI failed to identify the industries or enterprises that received benefits under these programs and the corresponding amounts given to them (''usage data''). Because the GOI's response did not provide us with enough information to determine whether any of these seven programs are countervailable, we requested this information a second time. This second attempt consisted of two questionnaires issued on June 17, and June 28, 2011, respectively. The GOI filed a timely response to the June 17, questionnaire, but failed to respond to many of the questions in the questionnaire, including questions concerning usage for three programs. The GOI then failed to provide usage data for the remaining four programs in its July 25, 2011 questionnaire response, although it did confirm that two programs (Measure 3.14 and Regional Law 15/1993) are regionally specific.

The statute identifies specificity as one of three necessary elements of a countervailable subsidy. *See* sections 771(5)(A) and 771(5A) of the Act. We normally rely on information from the government to determine whether a program is specific. *See, e.g., Certain Magnesia Carbon Bricks From the People's Republic of China: Final Affirmative Countervailing Duty Determination,* 75 FR 45472 (August 2, 2010) and accompanying Issues and Decision Memorandum at Comment 6. Although it was given multiple opportunities, the GOI's responses left us without the necessary information to determine whether many of the programs reported by Tomasello on April 13, 2011, are countervailable.

We preliminarily determine that the GOI has withheld necessary information that was requested of it for five of the seven programs. The GOI also failed to provide information requested by the Department by the deadline for the submission of the information. Because the record is incomplete for these programs, the Department must rely on ''facts available.'' *See* sections 776(a)(1), 776(a)(2)(A) and 776(a)(2)(B) of the Act. Moreover, the GOI has failed to cooperate by not acting to the best of its ability to comply with our request for information, so we are applying an adverse inference in our use of facts available. *See* section 776(b) of the Act. Due to the GOI's failure either to provide information necessary for our determination about these programs, or to provide this information in a timely manner, we are finding as adverse facts available that benefits from five of these seven programs are specific.[2] *See* section 771(5A) of the Act. An analysis of these programs is found in the ''Analysis of Programs'' section below.

Section 776(c) of the Act provides that, when the Department relies on secondary information rather than on information obtained in the course of an investigation or review, it shall, to the extent practicable, corroborate that information from independent sources that are reasonably at its disposal. Secondary information is defined as ''information derived from the petition that gave rise to the investigation or review, the final determination concerning the subject merchandise, or any previous review under section 751 of the Act concerning the subject merchandise.''

The facts available decisions described above do not rely on secondary information. Our determinations regarding the specificity of these programs are based on the unwillingness of the GOI to provide necessary information pertaining to the access to, or the distribution of, the subsidies. The corroboration requirement of section 776(c) of the Act is, therefore, not applicable to the use of facts available in this review.

Subsidies Valuation Information

Allocation Period

Pursuant to 19 CFR 351.524(b), benefits from non-recurring subsidies are allocated over a period corresponding to the average useful life (''AUL'') of the renewable physical assets used to produce the subject merchandise. The Department's regulations create a rebuttable presumption that the AUL will be taken from the U.S. Internal Revenue Service's Class Life Asset Depreciation Range System (''IRS Tables''). *See* 19 CFR 351.524(d)(2). For pasta, the most recent IRS Tables prescribe an AUL of 12 years. None of the responding companies or other interested parties objected to this allocation period. Therefore, we have used a 12-year allocation period.

Attribution of Subsidies

Pursuant to 19 CFR 351.525(b)(6), the Department will attribute subsidies received by companies with cross-ownership to the combined sales of those companies.

[1] The Department determined not to investigate this program in the countervailing duty investigation of certain pasta from Italy because it was previously found not countervailable. *See Notice of Initiation of Countervailing Duty Investigations: Certain Pasta (''Pasta'') From Italy and Turkey,* 60 FR 30280, 30281–82 (June 8, 1995) (''*Pasta Investigation Initiation*''). *See also Final Affirmative Countervailing Duty Determination: Certain Pasta (''Pasta'') From Italy,* 61 FR 30288 (June 14, 1996) (''*Pasta Investigation*'') and accompanying Issues and Decision Memorandum at Comment 28 (summarizing the Department's determination not to investigate this program). Our rationale for revisiting this determination can be found in the Law 46/1982 program description, below.

[2] For two of the programs, *i.e.* Measure 3.14 and Regional Law 15/1993, the GOI provided information indicating that the programs are regionally specific. *See* discussion, *supra.* Accordingly, the Department has made specificity determinations for these two programs without resorting to facts available.

De Cecco: In the instant review, De Cecco has responded on behalf of itself and three other members of the De Cecco group of companies: Molino e Pastificio De Decco S.p.A. (''De Cecco Pescara''), Centrale Elettrica F.lli De Cecco S.r.L. (''Centrale''), and Consorzio Elettrico Imprese De Cecco (''C.E.I.D.''). *See* De Cecco questionnaire response dated November 3, 2010 at 5.

De Cecco manufactures pasta for sale in Italy, to third-country markets, and to the United States. *Id.* at 7. De Cecco Pescara manufactures pasta for sale to De Cecco and to unaffiliated third parties in Italy. *Id.* For the reasons explained in the Business Proprietary Memorandum from Mahnaz Khan to Susan Kuhbach, ''Information Concerning Respondents' Attribution,'' dated August 1, 2011 (''Respondents' Attribution Memo''), we find that cross ownership exists between De Cecco Pescara and De Cecco within the meaning of 19 CFR 351.525(b)(6)(vi). *Id.* at 2. Therefore, in accordance with 19 CFR 351.525(b)(6)(ii), we are attributing subsidies received by De Cecco and De Cecco Pescara to the combined sales of both, excluding inter-company sales.

Effective January 1, 1999, Molino F.lli De Cecco di Filippo S.p.A. (''De Cecco Molino''), another member of the De Cecco group on whose behalf De Cecco responded in the fourth administrative review, was merged with De Cecco and ceased to be a separate entity. *See Certain Pasta From Italy: Final Results of the Fourth Countervailing Duty Administrative Review,* 66 FR 64214 (December 12, 2001) (''*Fourth Administrative Review Final''*) and accompanying Issues and Decision Memorandum. The Department will continue to consider countervailable any benefits received by De Cecco Molino in past administrative review periods and allocated over a period that extends into or beyond the current POR as benefits attributable to De Cecco. *See* Memorandum to the File, ''2009 Preliminary Results Calculation Memorandum for F.lli De Cecco di Filippo Fara San Martino S.p.A..,'' dated August 1, 2011 (''De Cecco Preliminary Calc Memo'').

Finally, De Cecco has reported it purchased electricity from C.E.I.D. that was produced by Centrale. Centrale is majority owned by members of the De Cecco family. *See* De Cecco questionnaire response dated November 3, 2010 at 6. C.E.I.D. is a consortium consisting of Centrale and De Cecco. Neither Centrale nor C.E.I.D. received any subsidies during the POR or AUL period. *Id.* Therefore, we do not reach the issue of whether cross-ownership exists or whether subsidies to Centrale or C.E.I.D. would be attributable to the pasta sold by De Cecco under 19 CFR 351.525(b)(6).

Fabianelli: FABFIN S.p.A. (''FABFIN'') is a company that actively produced and sold subject pasta between 2001 and 2006. Although it stopped all production in 2006, it still exists as a legal entity. Fabianelli stated in its response that it owned 95 percent of the shares of FABFIN at the beginning of 2009. On June 19, 2009, Fabianelli purchased the remaining five percent of FABFIN's shares, making FABFIN a wholly-owned subsidiary of Fabianelli. *See* Fabianelli questionnaire response dated November 3, 2010 at 3. Therefore, we determine that cross ownership exists between FABFIN and Fabianelli as defined by 19 CFR 351.525(b)(6)(vi).

Based on their questionnaire responses, we preliminarily determine that Pallante and Tomasello have no affiliates for which cross-ownership exists. *See* Pallante questionnaire response dated November 3, 2010 at 3 and Tomasello questionnaire response dated November 3, 2010 at 3; *see also* Respondents' Attribution Memo. Thus, we are attributing any subsidies received by Pallante and Tomasello to their respective sales only.

Changes in Ownership

Fabianelli reported that on March 1, 2001, its subsidiary FABFIN acquired the assets of Pastificio Maltagliati (''Maltagliati'') in a bankruptcy trustee sale. *See* Fabianelli questionnaire response dated March 30, 2011 at 1. We find that prior to entering bankruptcy, Maltagliati was granted reductions to its social security payments under Law 863/84 and received export restitution payments within the AUL period. We consider both of these programs to confer recurring benefits, in accordance with 19 CFR 351.524(c) and consistent with our treatment of these programs in the investigation and previous reviews. *See, e.g., Pasta Investigation,* 61 FR at 30294–95. Therefore, subsidies given to Maltagliati did not confer countervailable benefits upon Fabianelli because the subsidies received by Maltagliati were expensed in the years that they were received.

Benchmarks for Long-Term Loans and Discount Rates

Pursuant to 19 CFR 351.505(a), the Department will use the actual cost of comparable borrowing by a company as a loan benchmark, when available. According to 19 CFR 351.505(a)(2), a comparable commercial loan is defined as one that, when compared to the government-provided loan in question, has similarities in the structure of the loan (*e.g.,* fixed interest rate versus variable interest rate), the maturity of the loan (*e.g.,* short-term versus long-term), and the currency in which the loan is denominated.

On June 24, 2011, Tomasello informed us that it received several commercial loans within the AUL period. We issued questionnaires to both Tomasello and the GOI to determine, based on the criteria found at 19 CFR 351.505(a)(2), whether these loans could be compared to the loans Tomasello received under programs covered in this review. We received responses from Tomasello on July 20, 2011, and from the GOI on July 25, 2011.

One of the loans Tomasello submitted to us was provided by the Regional Institute for the Financing of Industries in Sicily (''IRFIS''). Based on information on the record, we preliminarily determine that IRFIS is a government-owned special purpose bank within the meaning of 19 CFR 351.505(a)(2)(ii). *See* Business Proprietary Memorandum to the File from Christopher Siepmann, ''2009 Preliminary Results Calculation Memorandum for Molino e Pastificio Tomasello, S.p.A.,'' (August 1, 2011) (''Tomasello Preliminary Calc Memo''). *See also* Memorandum to File from Christopher Siepmann, ''Placement of Certain Information Related to IRFIS On the Record'' (July 22, 2011), and GOI fifth supplemental questionnaire response dated July 25, 2011 at 1. Therefore, we have not used this loan to calculate a benchmark.

The remainder of the information we have used in our evaluation of these loans is business proprietary. *See* Tomasello Preliminary Calc Memo. Based on this information, we preliminarily determine that none of the loans submitted by Tomasello can serve as a loan benchmark pursuant to 19 CFR 351.505(a)(2) for the loans Tomasello received under programs covered by this review.

Because Fabianelli, De Cecco, and Pallante did not report the receipt of any comparable commercial loans in the years in which the GOI agreed to provide loans under the programs covered in this review, and because we have not found comparable loans among those submitted by Tomasello, we used as our benchmark a national average interest rate for comparable commercial loans, pursuant to 19 CFR 351.505(a)(3)(ii). Consistent with our past practice in this proceeding, for years prior to 1995, we used the Bank of Italy reference rate adjusted upward to reflect the mark-up an Italian commercial bank would charge a

corporate customer. *See, e.g., Certain Pasta From Italy: Preliminary Results and Partial Rescission of the Eighth Countervailing Duty Administrative Review,* 70 FR 17971 (April 8, 2005), unchanged in *Certain Pasta from Italy: Final Results of the Eighth Countervailing Duty Administrative Review,* 70 FR 37084 (June 28, 2005). For benefits received in 1995–2004, we used the Italian Bankers' Association (''ABI'') prime interest rate (as reported by the Bank of Italy), increased by the average spread charged by banks on loans to commercial customers plus an amount for bank charges. *See Certain Pasta from Italy: Preliminary Results of the 12th (2007) Countervailing Duty Administrative Review,* 74 FR 25489, 25491 (May 28, 2009) (''*12th (2007) Administrative Review Preliminary Results''*), unchanged in *Certain Pasta from Italy: Final Results of the 12th (2007) Countervailing Duty Administrative Review,* 74 FR 47204 (September 15, 2009). The Bank of Italy ceased reporting this rate in 2004. *See 12th (2007) Administrative Review Preliminary Results,* 74 FR at 25491. Because the ABI prime rate was no longer reported after 2004, for 2005–2009, we have used the ''Bank Interest Rates on Euro Loans: Outstanding Amounts, Non-Financial Corporations, Loans With Original Maturity More Than Five Years'' published by the Bank of Italy and provided by the GOI in its November 1, 2010, questionnaire response at Exhibits 3, 4, 5 and 6. *Id.* We increased this rate by the mark-up and bank charges described above.

Also, none of the companies reported loan interest rates that could be used as discount rates (*see* 19 CFR 351.524(d)(3)(A)). Therefore, in order to allocate non-recurring benefits over time, we calculated discount rates for these companies by using the national average cost of long-term, fixed-rate loans pursuant to 19 CFR 351.524(d)(3)(B).

Analysis of Programs

I. Programs Preliminarily Determined To Be Countervailable

A. Industrial Development Grants Under Law 64/86

Law 64/86 provided assistance to promote development in the Mezzogiorno (the south of Italy). Grants were awarded to companies constructing new plants or expanding or modernizing existing plants. Pasta companies were eligible for grants to expand existing plants but not to establish new plants because the market for pasta was deemed to be close to saturated. Grants were made only after a private credit institution chosen by the applicant made a positive assessment of the project.

In 1992, the Italian Parliament abrogated Law 64/86 and replaced it with Law 488/92 (*see* section I.B., below). This decision became effective in 1993. However, companies whose projects had been approved prior to 1993 were authorized to continue receiving grants under Law 64/86 after 1993. De Cecco and Pallante received grants under Law 64/86 that conferred a benefit during the POR. *See* De Cecco's questionnaire response dated November 3, 2010 at Exhibit 9, and Pallante's questionnaire response dated November 3, 2010 at Exhibit 5.

In the *Pasta Investigation,* the Department determined that these grants confer a countervailable subsidy within the meaning of section 771(5) of the Act. They are a direct transfer of funds from the GOI bestowing a benefit in the amount of the grant. *See* section 771(5)(D)(i) of the Act; *see also* 19 CFR 351.504(a). Also, these grants were found to be regionally specific within the meaning of section 771(5A)(D)(iv) of the Act.

As stated in *Live Swine from Canada,*[3] ''it is well-established that where the Department has determined that a program is (or is not) countervailable, it is the Department's policy not to re-examine the issue of that program's countervailability in subsequent reviews unless new information or evidence of changed circumstances is submitted which warrants reconsideration.'' Also, this policy is reflected in the Department's standard questionnaire used in countervailing duty administrative reviews which states that ''absent new information or evidence of changed circumstances, we do not intend to reexamine the countervailability of programs previously found to be countervailable.''[4]

In this review, neither the GOI nor the respondent companies have provided new information that would warrant reconsideration of our determination that these grants are countervailable subsidies.

In the *Pasta Investigation,* the Department treated the industrial development grants as non-recurring. No new information has been placed on the record of this review that would cause us to depart from this treatment. Therefore, we have followed the methodology described in 19 CFR 351.524(b), which directs us to allocate over time those non-recurring grants whose total authorized amount exceeds 0.5 percent of the recipient's sales in the year of authorization. Where the total amount authorized is less than 0.5 percent of the recipient's sales in the year of authorization, the benefit is countervailed in full (''expensed'') in the year of receipt. We determined that the grants received by De Cecco and Pallante under Law 64/86 exceeded 0.5 percent of their sales in the years in which the grants were approved.

Consequently, we used the grant methodology described in 19 CFR 351.524(d) to allocate the benefit from those grants. We divided the amounts allocated to the POR by the respective total sales of De Cecco and Pallante.

On this basis, we preliminarily determine the countervailable subsidy from the Law 64/86 industrial development grants to be 0.19 percent *ad valorem* for De Cecco and 0.01 percent *ad valorem* for Pallante. *See* De Cecco Preliminary Calc Memo, and Memorandum to the File, ''2009 Preliminary Results Calculation Memorandum for Pastificio Antonio Pallante S.r.L.,'' dated August 1, 2011 (''Pallante Preliminary Calc Memo'').

B. Industrial Development Grants Under Law 488/92

In 1986, the EU initiated an investigation of the GOI's regional subsidy practices. As a result of this investigation, the GOI changed the regions eligible for regional subsidies to include depressed areas in central and northern Italy in addition to the Mezzogiorno. After this change, the areas eligible for regional subsidies are the same as those classified as Objective 1 (underdeveloped regions), Objective 2 (declining industrial regions), or Objective 5(b) (declining agricultural regions) areas by the EU. The new policy was given legislative form in Law 488/92 under which Italian companies in the eligible regions and sectors (manufacturing, mining, and certain business services) could apply for industrial development grants.

Law 488/92 grants are made only after a preliminary examination by a bank authorized by the Ministry of Industry. On the basis of the findings of this preliminary examination, the Ministry of Industry ranks the companies applying for grants. The ranking is based on indicators such as the amount of capital the company will contribute from its own funds, the number of jobs created, regional priorities, *etc.* Grants are then made based on this ranking. De Cecco, Tomasello and Pallante received

[3] *See Live Swine from Canada; Final Results of Countervailing Duty Administrative Reviews,* 61 FR 52408, 52420 (October 7, 1996) (''*Live Swine from Canada''*).

[4] *See* Department's November 10, 2009 letter to the Embassy of Italy, at enclosure.

grants under Law 488/92 that conferred a benefit during the POR.

In the *Second Administrative Review,*[5] the Department determined that Law 488/92 grants confer a countervailable subsidy within the meaning of section 771(5) of the Act. They are a direct transfer of funds from the GOI bestowing a benefit in the amount of the grant. *See* section 771(5)(D)(i) of the Act; *see also* 19 CFR 351.504(a). Also, these grants were found to be regionally specific within the meaning of section 771(5A)(D)(iv) of the Act. In the instant review, neither the GOI nor the respondent companies have provided new information which would warrant reconsideration of our determination that these grants are countervailable subsidies. *See Live Swine from Canada,* 61 FR at 52420.

In the *Second Administrative Review,* the Department treated the industrial development grants as non-recurring. No new information has been placed on the record of this review that would cause us to depart from this treatment. Therefore, we have followed the methodology described in 19 CFR 351.524(b) and because the grants received by De Cecco, Tomasello and Pallante under Law 488/92 exceeded 0.5 percent of their sales in the year in which the grants were approved, we allocated the benefits over time using the grant methodology described in 19 CFR 351.524(d). We divided the amounts allocated to the POR by the respective total sales of De Cecco, Pallante and Tomasello in the POR.

On this basis, we preliminarily determine the countervailable subsidy from the Law 488/92 industrial development grants to be 0.15 percent *ad valorem* for De Cecco, 0.31 percent *ad valorem* for Pallante, and 3.34 percent *ad valorem* for Tomasello. *See* De Cecco Preliminary Calc Memo, Pallante Preliminary Calc Memo, and Tomasello Preliminary Calc Memo.

C. Interest Contributions Under Law 488/92

In the second administrative review of this order, the Department found that ''loans are not provided under Law 488/92.'' *Second Administrative Review,* 64 FR at 17620. However, the GOI later provided documentation that a May 14, 2005 Law at Article 80 and implementing decree changed this practice to permit companies to obtain loans, in addition to grants, for initiatives in the areas eligible for such assistance under Law 488/92. *See Certain Pasta From Italy: Preliminary Results of the 13th (2008) Countervailing Duty Administrative Review,* 75 FR 18806 (April 13, 2010), unchanged in *Certain Pasta from Italy: Final Results of the 13th (2008) Countervailing Duty Administrative Review,* 75 FR 37386 (June 29, 2010). The preliminary examination of companies' loan applications by an authorized bank, the ranking by the Ministry of Economic Development, and the award of loans based on the ranking are similar to the process described for Law 488/92 grants (*see* section I.B., above). *Id.* In addition, the bank is responsible for assessing the company's credit. *Id.*

Under this modification to Law 488/92, the loans must have a duration not exceeding 15 years and not less than six years. *Id.* The fixed-interest rates on these long-term loans are set at a rate of 0.50 percent with the GOI covering the difference in interest amount between that rate and the market rate. *Id.* De Cecco received interest contributions under Law 488/92 during the POR. *See* De Cecco's November 3, 2010 questionnaire response at 14, 23–37.

We preliminarily determine that these interest contributions are countervailable subsidies within the meaning of section 771(5) of the Act. They are a direct transfer of funds from the GOI providing a benefit in the amount of the difference between the benchmark interest rate and the interest rate paid by the companies. *See* section 751(5)(E)(ii) of the Act. Also, these interest contributions are regionally specific within the meaning of section 771(5A)(D)(iv) of the Act because they are limited to companies located within regions which meet the criteria of Objective 1, Objective 2, and Objective 5(b) areas determined by the EU.

In accordance with 19 CFR 351.505(c)(2) and 351.508(c)(2), we calculated the benefit for the POR by computing the difference between the amount of interest paid during the POR by De Cecco on its Law 488/92 loan and the amount of interest De Cecco would have paid at the benchmark interest rate. We divided the benefit received by De Cecco in the POR by its sales in the POR.

On this basis, we preliminarily determine the countervailable subsidy from the Law 488/92 interest contributions to be 0.05 percent *ad valorem* for De Cecco. *See* De Cecco Preliminary Calc Memo.

D. Measure 3.14 of the POR Sicilia 2000/2006

The POR Sicilia 2000/2006 is a regional development program designed to encourage stable economic growth in southern Italy. *See* GOI fifth questionnaire response dated July 25, 2011 at 1. Measure 3.14 of the POR Sicilia 2000/2006 provides assistance in the form of grants to companies that undertake approved industrial research projects. Companies may apply for funding under two provisions. The first provides support to companies for developing best practices in a number of fields. Most grants are given under the second provision, which funds industrial research projects, particularly those that are undertaken in partnership with other companies or with research institutions such as universities. *See* Tomasello questionnaire response dated April 13, 2011 at Exhibit 3. Tomasello stated that it received grants under Measure 3.14 in 2008 and 2009. *See* Tomasello questionnaire response dated April 13, 2011 at 3; *see also* Tomasello questionnaire response dated June 24, 2011 at 4. The GOI also reported that Tomasello received grants under this program, but the amounts reported by the two parties differ. *See* GOI questionnaire response dated July 25, 2011 at 4. We intend to seek clarification of this discrepancy for the final results. For purposes of these preliminary results, we have used the amount reported by Tomasello.

Tomasello has argued that subsidies received under Measure 3.14 should not be considered countervailable because the grants are for precompetitive research and development activities. Section 771(5B) of the Act describes research and development subsidies as being non-countervailable; however, in accordance with section 771(5B)(G)(i), this provision regarding noncountervailability expired in 2000. Therefore, we do not consider benefits received under Measure 3.14 to be entitled to treatment as so-called ''green-light,'' or noncountervailable, subsidies.

We preliminarily determine that grants under Measure 3.14 confer a countervailable subsidy within the meaning of section 771(5) of the Act. They provide a direct transfer of funds from the GOI bestowing a benefit in the amount of the grant. They are also specific within the meaning of section 771(5A)(D)(iv) of the Act because the GOI limits benefits under this program to companies in certain regions. *See* GOI fourth questionnaire response dated July 25, 2011 at 3.

We also preliminarily determine that Measure 3.14 grants are non-recurring

[5] *See Certain Pasta from Italy: Preliminary Results of Countervailing Duty Administrative Review,* 64 FR 17618, 17620 (April 12, 1999) (''*Second Administrative Review*''), unchanged in *Certain Pasta From Italy: Final Results of the Second Countervailing Duty Administrative Review,* 64 FR 44489 (August 16, 1999).

because they are exceptional events. Recipients must file a separate application for each project they seek funding for and cannot expect funding on an ongoing basis. *See* Tomasello questionnaire response dated April 13, 2011 at 4. Therefore, we have followed the methodology described in 19 CFR 351.524(b) and because the grants received by Tomasello under Measure 3.14 exceeded 0.5 percent of its sales in the year in which the grants were approved, we used the grant methodology described in 19 CFR 351.524(d) to allocate the benefit from these grants. We divided the amount allocated to the POR by Tomasello's total sales in the POR.

On this basis, we preliminarily determine the countervailable subsidy from the Measure 3.14 research grants to be 0.12 percent *ad valorem* for Tomasello. *See* Tomasello Preliminary Calc Memo.

E. European Social Fund

The European Social Fund (''ESF''), one of the Structural Funds operated by the EU, was established to improve workers' opportunities through training and to raise workers' standards of living throughout the European Community by increasing their employability. There are six different objectives identified by the Structural Funds: Objective 1 covers projects located in underdeveloped regions, Objective 2 addresses areas in industrial decline, Objective 3 relates to the employment of persons under 25 years of age, Objective 4 funds training for employees in companies undergoing restructuring, Objective 5 pertains to agricultural areas, and Objective 6 pertains to regions with very low population (*i.e.,* the far north). Tomasello received ESF grants in 2008 and 2009 under Objective 1 (through Measure 3.09 of the POR Sicilia 2000/2006) for the purpose of training its workers in improved quality control techniques. *See* Tomasello questionnaire response dated April 13, 2011 at 5 and Exhibit 4; *see also* GOI fifth questionnaire response dated July 25, 2011 at Exhibit 2.

In the *Pasta Investigation,* the Department determined that ESF grants confer a countervailable subsidy within the meaning of section 771(5) of the Act. *See Pasta Investigation,* 61 FR at 30294. We consider worker training programs to provide a countervailable benefit to a company when the company is relieved of an obligation it would have otherwise incurred. *Id.* Since companies normally incur the costs of training to enhance the job related skills of their own employees, we determine that this ESF grant relieves Tomasello of obligations it would have otherwise incurred. Consequently, the ESF grant is a financial contribution as described in section 771(5)(D)(i) of the Act which provides a benefit to the recipient in the amount of the grant.

The ESF grant received by Tomasello provided funding from three sources: the EU, the GOI, and the Region of Sicily. Consistent with prior cases, we have examined the specificity of the ESF funding under Objective 1 separately from any funding under other objectives. *See Final Affirmative Countervailing Duty Determination: Certain Stainless Steel Wire Rod From Italy,* 63 FR 40474, 40487 (July 29, 1998) (''*Wire Rod from Italy*''). Moreover, since funding for this Objective 1 grant was provided through the regional operational program from three sources, we have examined the specificity of the funding for each source of funds, consistent with our treatment of the ESF in the *Second Administrative Review. See Second Administrative Review,* 64 FR at 44492.

In the *Pasta Investigation,* the Department determined that the ESF funds for Objective 1 provided by the EU and the GOI are limited to underdeveloped regions and, hence, regionally specific within the meaning of section 771(5A)(D)(iv) of the Act. Regarding funding from the regional government, we requested usage information from the GOI on two occasions: first, on May 12, 2011; and second, on June 17, 2011. The GOI did not provide this information either time.

As explained above under ''Use of Facts Otherwise Available and Adverse Inferences,'' in cases where there is not enough information on the record for us to determine whether a program is specific (*see* section 776(a)(1) of the Act), and in cases where an interested party fails to provide information that has been requested by the Department by the deadline for the submission of that information (*see* section 776(a)(2)(B) of the Act), we use facts otherwise available. We further explained that an adverse inference is warranted where a party fails to cooperate by not acting to the best of its ability to comply with a request for information from the Department. Therefore, we preliminarily determine as adverse facts available that the regional component of Tomasello's ESF grant is also specific.

The Department normally considers the benefits from worker training programs to be recurring. *See* CFR 351.524(c)(1). However, consistent with the Department's determination in *Wire Rod From Italy* that these grants relate to specific, individual projects, and based on information on the record of this review, we have treated these grants as non-recurring because each required separate government approval. *See Wire Rod From Italy,* 63 FR at 40487.

Accordingly, we have followed the methodology described in 19 CFR 351.524(b) and because the grants received by Tomasello under this program exceeded 0.5 percent of its sales in the year in which the grants were approved, we used the grant methodology described in 19 CFR 351.524(d) to allocate the benefit from these grants. We divided the amount allocated to the POR by Tomasello's total sales in the POR.

On this basis, we preliminarily determine the countervailable subsidy from the ESF grants to be 0.10 percent *ad valorem* for Tomasello. *See* Tomasello Preliminary Calc Memo.

F. Tax Credits Under Article 280 of Law 296/2006

Article 280 of Law 296/2006 authorizes a tax credit to companies of up to ten percent of the costs associated with eligible research activities, or a tax credit of up to fifteen percent for research expenses associated with contracts between companies and research institutions. *See* Tomasello questionnaire response dated April 13, 2011 at Exhibit 6; *see also* GOI questionnaire response dated June 13, 2011 at Exhibit 4, and GOI fourth questionnaire response dated July 25, 2011 at 6. Tomasello reported receiving a tax credit under this provision in 2009. It identified the benefits as having been received under Legislative Decree 76/2008, which contains regulations for the implementation of the credit. *See* Tomasello questionnaire response dated April 13, 2011 at 11; *see also* GOI fourth questionnaire response dated July 25, 2011 at 6.

We preliminarily determine that tax credits under Article 280 of Law 296/2006 confer a countervailable subsidy within the meaning of section 771(5) of the Act. The credits are a financial contribution in the form of revenue forgone (see section 771(D)(ii) of the Act) and they confer a financial contribution within the meaning of section 771(5)(D)(ii) of the Act in the amount of the difference between the taxes that Tomasello paid in 2009, and the taxes that Tomasello would have been required to pay if it had not taken advantage of the credit.

In its July 1, and July 25, 2011 submissions, the GOI stated that this tax credit is available throughout Italy and is not limited by region or industrial sector. However, the GOI did not respond to either of our requests for

program usage information, which we issued on May 12, and June 28, 2011.

As explained above under ''Use of Facts Otherwise Available and Adverse Inferences,'' in cases where there is not enough information on the record for us to determine whether a program is specific (*see* section 776(a)(1) of the Act), and in cases where an interested party fails to provide information that has been requested by the Department by the deadline for the submission of that information (*see* section 776(a)(2)(B) of the Act), we use facts otherwise available. We further explained that an adverse inference is warranted where a party fails to cooperate by not acting to the best of its ability to comply with a request for information from the Department. Therefore, we preliminarily determine as adverse facts available that the tax credits granted under Article 280 of Law 296/2006 are specific.

In accordance with 19 CFR 351.524(c), we generally consider tax credits to confer recurring benefits. In order to calculate the countervailable subsidy that Tomasello received, we divided the amount of the tax credit applied by Tomasello on its 2009 tax return by Tomasello's total sales in the POR.

On this basis, we preliminarily determine the countervailable subsidy from Article 280 of Law 296/2006 to be 0.68 percent *ad valorem* for Tomasello. *See* Tomasello Preliminary Calc Memo.

G. Article 14 of Law 46/1982 (Fondo Innovazione Tecnologica)

Article 14 of Law 46/1982 authorized the creation of a revolving fund for technology innovation, also known as the ''FIT Program.'' Through the fund, the Ministry for Economic Development provides aid for experimental and industrial research projects in the form of soft loans, grants against interest, and capital grants. After an application is submitted to one of the banks approved by the Ministry to administer the program, the application is evaluated on a number of scientific, technological and economic criteria. Subject matter experts in relevant fields may be asked to help evaluate the technical merits of the proposal. Within 90 days from the submission of an application, the bank is required to report to the Ministry of Economic Development whether it believes the project is feasible. Projects that pass this examination are funded in order of highest to lowest score, until the all the resources appropriated for the program have been exhausted. *See* GOI questionnaire response dated June 13, 2011 at 3; *see also* GOI fourth questionnaire response dated July 25, 2011 at 5. Tomasello reported receiving both a grant and a loan under Article 14 of Law 46/1982. *See* Tomasello questionnaire response dated April 13, 2011 at 7. The GOI also reported that Tomasello received a grant and a loan under this program, but the grant amounts reported by the two parties differ. *See* GOI fourth questionnaire response dated July 25, 2011 at Exhibit 7. We intend to seek clarification of this discrepancy for the final results. Because the amounts reported by the GOI are more consistent with the underlying decree, we have used them for these preliminary results.

In the *Pasta Investigation,* the petitioners asked us to investigate this program as a possible countervailable subsidy. We declined because we had found Law 46/1982 to be noncountervailable in a previous investigation. *See Pasta Investigation Initiation,* 60 FR at 30281–82. As previously explained, we generally will not re-examine the countervailability of a program that has been found to be non-countervailable. *See, e.g., Live Swine from Canada,* 61 FR at 52420. However, information Tomasello submitted in its questionnaire response suggested that although funds are available across Italy, additional funds are available to companies in specific regions. *See* Tomasello questionnaire response dated April 13, 2011, at Exhibit 5. Therefore, we included Law 46/1982 among the programs for which we asked the GOI to provide information on May 12, and June 17, 2011.

The GOI failed to provide a timely response to our request for information. In its July 25, 2011 supplemental questionnaire response, the GOI provided limited information about this program, but because the deadline for submission of this information was July 1, 2011, we are rejecting this information as untimely in accordance with 19 CFR 351.302(d) and 19 CFR 351.104(a)(2)(ii)(A).

As explained above under ''Use of Facts Otherwise Available and Adverse Inferences,'' in cases where there is not enough information on the record for us to determine whether a program is specific (*see* section 776(a)(1) of the Act), and in cases where an interested party fails to provide information that has been requested by the Department by the deadline for the submission of that information (*see* section 776(a)(2)(B) of the Act), we use facts otherwise available. We further explained that an adverse inference is warranted where a party fails to cooperate by not acting to the best of its ability to comply with a request for information from the Department. Therefore, we preliminarily determine as adverse facts available that the assistance received by Tomasello under Article 14 of Law 46/1982 is specific.

We further determine preliminarily that the grants and loans provided under Article 14 of Law 46/1982 are financial contributions because they are a direct transfer of funds from the GOI. *See* section 771(5)(D)(i) of the Act.

In accordance with 19 CFR 351.504(a), the benefit provided by the grant is the amount of the grant. Moreover, because companies must file a separate application and receive the government's express authorization for each grant, we preliminarily determine that these subsidies are non-recurring. Accordingly, we have followed the methodology described in 19 CFR 351.524(b) and because the grants received by Tomasello under this program exceeded 0.5 percent of its sales in the year in which the grants were approved, we used the grant methodology described in 19 CFR 351.524(d) to allocate the benefit from these grants. We divided the amount allocated to the POR by Tomasello's total sales in the POR.

On this basis, we preliminarily determine the countervailable subsidy from the Law 46/1982 research grant to be 0.17 percent *ad valorem* for Tomasello. *See* Tomasello Preliminary Calc Memo.

We also preliminarily determine that loans under Article 14 of Law 46/1982 convey a countervailable subsidy within the meaning of section 771(5) of the Act because they provide a benefit from the GOI in the amount of the difference between the interest a company paid on the loan and the interest the company would have paid on a comparable commercial loan. In accordance with 19 CFR 351.505(c)(2), we calculated the countervailable benefit Tomasello received from this loan in the POR by computing the difference between the payments Tomasello made on the loan during the POR and the payments Tomasello would have made on a benchmark loan. *See* the ''Benchmarks for Long-Term Loans and Discount Rates'' section of this notice above. We divided the benefit received by Tomasello by its total sales in the POR.

On this basis, we preliminarily determine the countervailable subsidy from Law 46/1982 research loans to be 0.12 percent *ad valorem* for Tomasello. *See* Tomasello Preliminary Calc Memo.

H. Regional Law 15/1993, as Amended by Regional Law 66/1995

Regional Law 15/1993 authorizes interest contributions for companies

that agree to consolidate their short-term debt. These contributions are equal to 40 percent of the reference interest rate in effect on the date that the consolidated loan is opened. Participating companies may receive interest contributions for up to ten years, following a grace period of one year. *See* Tomasello questionnaire response dated April 13, 2011 at Exhibit 9. According to the GOI, benefits under this program are limited to enterprises or industries within certain regions. *See* GOI fourth questionnaire response dated July 25, 2011 at 13.

Tomasello has reported conflicting information about the interest contributions it received under Regional Law 15/1993. *See* Tomasello questionnaire response dated April 13, 2011 at 16; *see also* Tomasello questionnaire response dated July 20, 2011 at Exhibit 5. In light of this, and because we received this information just before our statutory deadline to publish the preliminary results, we have used the information in Tomasello's earlier (April 13, 2011) questionnaire response to calculate the benefit it received under Regional Law 15/1993. We will seek clarification of this discrepancy for the final results.

Based on information provided by the GOI, we preliminarily determine that interest contributions under Regional Law 15/1993 are regionally specific within the meaning of section 771(5A)(D)(iv) of the Act. *See* GOI fourth questionnaire response dated July 25, 2011 at 13. Moreover, we preliminarily determine that these interest contributions are a financial contribution in the form of a direct transfer of funds (*see* section 771(D)(i) of the Act) and they confer a benefit within the meaning of section 771(5)(E) of the Act in the amount of the contribution. To calculate the benefit, we divided the amount Tomasello received in the POR by its total sales in the POR.

On this basis, we preliminarily determine the countervailable subsidy from interest contributions under Regional Law 15/1993 to be 0.06 percent *ad valorem* for Tomasello. *See* Tomasello Preliminary Calc Memo.

I. Regional Law 34/1988

Under Regional Law 34/1988, the Regional Department of Industry in Sicily may provide interest contributions to companies that belong to ''Consorzi di Garanzia Fidi,'' which are consortia made up of a number of companies. The GOI's contributions are made against interest paid by consortium members on lines of credit taken out through the consortium. *See* Tomasello questionnaire response dated April 13, 2011 at 18; *see also* GOI questionnaire response dated June 13, 2011 at 2.

Tomasello has reported conflicting information about the interest contributions it received under Regional Law 34/1988. *See* Tomasello questionnaire response dated April 13, 2011 at 18; *see also* Tomasello questionnaire response dated July 20, 2011 at Exhibit 6. In light of this, and because we received this information just before our statutory deadline to publish the preliminary results, we have used the information in Tomasello's earlier (April 13, 2011) questionnaire response to calculate the benefit it received under Regional Law 34/1998. We intend to seek clarification of this discrepancy for the final results.

On May 12, 2011, we asked the GOI to provide a full response to the appropriate questionnaire appendices for this program. In particular, we asked it to describe whether benefits under this program are limited to companies in specific sectors or regions, and to provide us with information regarding how benefits under this program are distributed across Sicily. Although the GOI provided some information, it did not answer our questions or provide enough information for us to determine whether the program is specific. We asked the GOI to answer these questions a second time on June 28, 2011. Apart from providing a translation of part of a related law, the GOI did not respond to the questionnaire appendices altogether in its July 25, 2011 response, nor did it provide program usage information.

As explained above under ''Use of Facts Otherwise Available and Adverse Inferences,'' in cases where there is not enough information on the record for us to determine whether a program is specific (*see* section 776(a)(1) of the Act), and in cases where an interested party fails to provide information that has been requested by the Department by the deadline for the submission of that information (*see* section 776(a)(2)(B) of the Act), we use facts otherwise available. We further explained that an adverse inference is warranted where a party fails to cooperate by not acting to the best of its ability to comply with a request for information from the Department. Therefore, we preliminarily determine as adverse facts available that the interest contributions received by Tomasello under Law 34/1988 are specific.

On this basis, we preliminarily determine that interest contributions under Regional Law 34/1988 confer a countervailable subsidy within the meaning of section 771(5) of the Act. They are a financial contribution in the form of a direct transfer of funds (*see* section 771(5)(D)(i) of the Act) and they confer a benefit within the meaning of section 771(5)(E) of the Act in the amount of the contribution. To calculate the benefit, we divided the amount Tomasello received in the POR by its total sales in the POR.

On this basis, we preliminarily determine the countervailable subsidy from interest contributions under Regional Law 34/1988 to be 0.10 percent *ad valorem* for Tomasello. *See* Tomasello Preliminary Calc Memo.

J. Article 23 of Legislative Decree 38/2000

Article 23 of Legislative Decree 38/2000 (''LD 38/2000'') helps certain companies comply with the workplace safety regulations contained in Legislative Decree 626/94 by providing assistance to those companies. The program is administered by the National Institute for Insurance Against Injuries in the Workplace, or INAIL, which is an agency of the Italian government. In order to be eligible for assistance, firms must be operating in the agricultural or artisanal sectors and qualify as small- to medium-sized companies (*i.e.,* they must have fewer than 250 employees, and their total annual turnover must be less than 40 million Euros, or they must have total assets of less than 27 million Euros). *See* GOI questionnaire response dated June 13, 2011, at 10.

INAIL is authorized to award funds in the form of grants or loans. It pays all interest and fees on the loans directly to the issuing bank, effectively making the loans interest-free to the recipient. *See* GOI questionnaire response dated June 13, 2011, at 10 and Exhibit 5; *see also* Tomasello questionnaire response dated April 13, 2011, at Exhibit 13, *and* Tomasello questionnaire response dated June 24, 2011 at Exhibit 5. Tomasello and Fabianelli both reported receiving assistance during the POR under LD 38/2000. Tomasello received a loan at zero percent interest for facility improvements, and Fabianelli received grants for expenses related to worker training. *See* Tomasello questionnaire response dated April 13, 2011 at 21; *and* Tomasello questionnaire response dated June 24, 2011 at Exhibit 5; *see also* Fabianelli questionnaire response dated November 3, 2010 at 19.

The GOI reported that benefits under LD 38/2000 are limited to companies in the agricultural and artisanal industries, but did not provide us with enough information to determine how the companies in this review can be classified. *See* GOI questionnaire

response dated June 13, 2011 at 10. It also did not address our questions regarding whether benefits are limited by region, nor did it submit information pertaining to how benefits were distributed across Italy. We requested this information twice, in supplemental questionnaires dated May 12, and June 28, 2011. Pursuant to 19 CFR 351.502(d), we do not regard a subsidy as being specific under section 771(5A)(D) of the Act solely because the subsidy is limited to the agricultural sector. However, because the GOI failed to provide us with enough information to determine how benefits are limited by region, and did not provide us with usage information, we are unable to determine whether benefits under this program are otherwise specific.

As explained above under ''Use of Facts Otherwise Available and Adverse Inferences,'' in cases where there is not enough information on the record for us to determine whether a program is specific (*see* section 776(a)(1) of the Act), and in cases where an interested party fails to provide information that has been requested by the Department by the deadline for the submission of that information (*see* section 776(a)(2)(B) of the Act), we use facts otherwise available. We further explained that an adverse inference is warranted where a party fails to cooperate by not acting to the best of its ability to comply with a request for information from the Department. Therefore, we preliminarily determine as adverse facts available that benefits received by Tomasello and Fabianelli under LD 38/2000 are specific.

We further determine preliminarily that the grants and loans provided under LD 38/2000 are financial contributions because they are a direct transfer of funds from the GOI. *See* section 771(5)(D)(i) of the Act.

In accordance with 19 CFR 351.504(a), the benefit provided by the grant is the amount of the grant. Pursuant to 19 CFR 351.524(b)(2), the Department will normally expense nonrecurring benefits provided under a particular subsidy program to the year in which benefits are received if the total amount approved under the program is less than 0.5 percent of relevant sales during the year in which the subsidy was approved. Because the GOI approved Fabianelli for amounts equaling less than 0.5 percent of Fabianelli's sales in the year in which the grant was approved, we have treated this grant as having been expensed prior to the POR in accordance with 19 CFR 351.524(b)(2). Thus, no countervailable benefit was provided to Fabianelli during the POR as a result of this program. *See* Business Proprietary Memorandum to the File, ''2009 Preliminary Results Calculation Memorandum for Pastificio Fabianelli S.p.A.'' (August 1, 2011).

We also preliminarily determine that loans under LD 38/2000 provide a countervailable subsidy within the meaning of section 771(5) of the Act because they provide a benefit from the GOI in the amount of the difference between the interest a company paid on the loan and the interest the company would have paid on a comparable commercial loan. In accordance with 19 CFR 351.505(c)(2), we calculated the countervailable benefit Tomasello received in the POR by computing the difference between the payments Tomasello made on the loan during the POR and the payments Tomasello would have made on a benchmark loan. *See* the ''Benchmarks for Long-Term Loans and Discount Rates'' section of this notice above. We divided the benefit received by Tomasello by its total sales in the POR.

On this basis, we preliminarily determine the countervailable subsidy from loans under Article 23 of Legislative Decree 38/2000 to be 0.10 percent *ad valorem* for Tomasello. *See* Tomasello Preliminary Calc Memo.

K. Law 289/02, Article 62, Investments in Disadvantaged Areas

Article 62 of Law 289/02 provides a credit towards taxes payable. The law was established to promote investment in disadvantaged areas by providing assistance to companies making investments such as the purchase of new equipment for existing structures or building new structures. Pallante reported receiving benefits under this program. *See* Pallante questionnaire response dated November 3, 2010 at 10 *and* Exhibit 5; *see also* Pallante questionnaire response dated March 31, 2011 at 3.

We have previously determined that Article 62 of Law 289/02 confers a countervailable subsidy. *See Certain Pasta from Italy: Preliminary Results of the Tenth Countervailing Duty Administrative Review,* 72 FR 43616 (August 6, 2007), unchanged in *Certain Pasta From Italy: Final Results of the Tenth Countervailing Duty Administrative Review,* 73 FR 7251 (February 7, 2008). The credit against taxes is a financial contribution within the meaning of section 771(5)(D)(ii) of the Act because it represents revenue foregone by the GOI and a benefit is conferred in the amount of the tax savings received by the companies per section 771(5)(E)(iv) of the Act. Also, the program is specific within the meaning of 751(5A)(D)(iv) of the Act because it is limited to certain geographical regions in Italy, specifically, the regions of Calabria, Campania, Basilicata, Pugilia, Sicilia, and Sardegna, and certain municipalities in the Abruzzo and Molise region, and certain municipalities in central and northern Italy. *Id.*

In the instant review, neither the GOI nor the respondent companies have provided new information which would warrant reconsideration of our determination that this program confers countervailable subsidies. *See Live Swine from Canada,* 61 FR at 52420.

In accordance with 19 CFR 351.524(c), we generally consider tax credits to confer recurring benefits. However, pursuant to 19 CFR 351.524(c)(2)(iii), when a subsidy is tied to the capital structure or capital assets of the firm, the Department treats the subsidy as non-recurring. Thus, in accordance with 19 CFR 351.524(b)(2), we determined that the tax credit received by Pallante exceeded 0.5 percent of its sales in the year in which the credit was approved. Therefore, we used the methodology described in 19 CFR 351.524(d) to allocate the benefit over time, and we divided the amount allocated to the POR by Pallante's total sales in the POR.

On this basis, we preliminarily determine the countervailable subsidy from Law 289/02 Article 62 to be 0.68 percent *ad valorem* for Pallante. *See* Pallante Preliminary Calc Memo.

L. Social Security Reductions and Exemptions—Sgravi

Italian law allows companies, particularly those located in the Mezzogiorno, to use a variety of exemptions from and reductions of payroll contributions that employers make to the Italian social security system for health care benefits, pensions, *etc.* These social security reductions and exemptions, also known as sgravi benefits, are regulated by a complex set of laws and regulations, and are sometimes linked to conditions such as creating more jobs. We have found in past segments of this proceeding that benefits under some of these laws (*e.g.,* Law 1089) are available only to companies located in the Mezzogiorno and other disadvantaged regions. *See Pasta Investigation,* 61 FR at 30293. Certain other laws (*e.g.,* Law 407/90) provide benefits to companies all over Italy, but the level of benefits is higher for companies in the Mezzogiorno and other disadvantaged regions than for companies in other parts of the country. *Id.* at 30294. Still

other laws provide benefits that are not linked to any region.

In the *Pasta Investigation* and subsequent reviews, the Department determined that certain types of social security reductions and exemptions confer countervailable subsidies within the meaning of section 771(5) of the Act. They represent revenue foregone by the GOI bestowing a benefit in the amount of the savings received by the companies. *See* section 771(5)(D)(ii) of the Act. Also, they were found to be regionally specific within the meaning of section 771(5A)(D)(iv) of the Act because they were limited to companies in the Mezzogiorno or because the higher levels of benefits were limited to companies in the Mezzogiorno.

In the instant review, no party in this proceeding challenged our past determinations in the *Pasta Investigation* and subsequent reviews that sgravi benefits, generally, were countervailable for companies located within the Mezzogiorno. *See Live Swine from Canada,* 61 FR at 52420. Sgravi benefits were provided during the POR under Law 407/90 to Tomasello. *See* Tomasello questionnaire response dated November 3, 2011 at 16.

(1) Law 407/90

Law 407/90 grants an exemption from social security taxes for three years when a company hires a worker who (1) has received wage supplementation for a period of at least two years, or (2) has been previously unemployed for a period of two years. A 100-percent exemption is allowed for companies in the Mezzogiorno, while companies located in the rest of Italy receive a 50-percent reduction.

In the *Pasta Investigation,* we determined that Law 407/90 confers a countervailable subsidy within the meaning of section 771(5) of the Act. *See Pasta Investigation,* 61 FR at 30294. The reduction or exemption of taxes is revenue foregone that is otherwise due and is, therefore, a financial contribution within the meaning of section 771(5)(D)(ii) of the Act. The benefit is the difference in the amount of the tax savings between companies located in the Mezzogiorno and companies located in the rest of Italy, in accordance with 19 CFR 351.509(a). Additionally, the program is regionally specific within the meaning of section 771(5A)(D)(iv) of the Act because higher levels of benefits are limited to companies in the Mezzogiorno.

In accordance with 19 CFR 351.524(c), and consistent with our methodology in the *Pasta Investigation* and in subsequent administrative reviews, we have treated social security reductions and exemptions as recurring benefits. *See, e.g., Pasta Investigation,* 61 FR at 30294. To calculate the countervailable subsidy for Tomasello, we divided the difference during the POR between the savings for the respondent company located in the Mezzogiorno and the savings a company located in the rest of Italy would have received. This amount was divided by Tomasello's total sales in the POR.

On this basis, we preliminarily determine the countervailable subsidy from Law 407/90 to be 0.01 percent *ad valorem* for Tomasello. *See* Tomasello Preliminary Calc Memo.

II. Programs Preliminarily Determined To Not Confer any Benefit During the POR

A. Law 317/91 Benefits for Innovative Investments

In the *Seventh Administrative Review,* the Department found that Law 317/91 allows for a capital contribution or a tax credit up to a maximum amount of Euro 232,405.60 to small- and medium-sized industrial, commercial, and service companies for innovative investments. However, no respondents in that review received benefits during the POR and the program was not analyzed further. *See Seventh Administrative Review,* 69 FR at 45684. Fabianelli reported that its subsidiary FABFIN received a grant under Law 317/91 in 2002. *See* Fabianelli questionnaire response dated November 3, 2010 at 19.

Pursuant to 19 CFR 351.524(b)(2), the Department will normally expense nonrecurring benefits provided under a particular subsidy program to the year in which benefits are received if the total amount approved under the program is less than 0.5 percent of relevant sales during the year in which the subsidy was approved. Because the GOI approved Fabianelli for an amount equaling less than 0.5 percent of Fabianelli's sales in the year in which the grant was approved,[6] we have treated this grant as having been expensed prior to the POR in accordance with 19 CFR 351.524(b)(2). Thus, no countervailable benefit was provided to Fabianelli during the POR under this program.

In situations where any benefit to the subject merchandise would be so small that there would be no impact on the overall subsidy rate, regardless of a determination of countervailability, it may not be necessary to determine whether benefits conferred under these programs to the subject merchandise are countervailable. *See, e.g., Final Negative Countervailing Duty Determination; Live Cattle From Canada,* 64 FR 57040, 57055 (October 22, 1999) (''*Cattle From Canada Final Determination''*). In this instance, since any benefit conferred upon Fabianelli was expensed prior to the POR, a determination of countervailability would have no impact on the overall subsidy rate. Thus, consistent with our past practice, we do not consider it necessary to determine whether benefits conferred under this provision of Law 341/95 to the subject merchandise are countervailable.

B. Industrial Development Grants Under Law 341/95

Fabianelli informed the Department that it received a grant in 2004 under Law 341/95 for the purchase of a computerized management system. *See* Fabianelli questionnaire response dated November 3, 2011 at 20. It noted that these funds were received under a different provision than the one examined by the Department in the fourth administrative review. *See Certain Pasta From Italy: Preliminary Results and Partial Rescission of Countervailing Duty Administrative Review,* 66 FR 40987, 40991 (August 6, 2001), unchanged in *Fourth Administrative Review Final.*

Pursuant to 19 CFR 351.524(b)(2), the Department will normally expense nonrecurring benefits provided under a particular subsidy program to the year in which benefits are received if the total amount approved under the program is less than 0.5 percent of relevant sales during the year in which the subsidy was approved. Because the GOI approved Fabianelli for an amount equaling less than 0.5 percent of Fabianelli's sales in the year in which the grant was approved, we have treated this grant as having been expensed prior to the POR in accordance with 19 CFR 351.524(b)(2).

In situations where any benefit to the subject merchandise would be so small that there would be no impact on the overall subsidy rate, regardless of a determination of countervailability, it may not be necessary to determine whether benefits conferred under these programs to the subject merchandise are countervailable. *See, e.g., Cattle From Canada Final Determination,* 64 FR at 57055. In this instance, since any benefit conferred upon Fabianelli was

[6] Generally, when two companies are cross-owned, the Department uses the combined sales of both companies to calculate the countervailable subsidy. In this case, benefits received by both Fabianelli and FABFIN were so small that they were *de minimis* based on the total sales of the recipient company alone. Therefore, we consider it unnecessary to use the combined sales of both companies because doing so would have no impact on Fabianelli's subsidy rate.

expensed prior to the POR, a determination of countervailability would have no impact on the overall subsidy rate. Thus, consistent with our past practice, we do not consider it necessary to determine whether benefits conferred under this provision of Law 341/95 to the subject merchandise are countervailable.

III. Programs Preliminarily Determined To Not Be Used

We examined the following programs and preliminarily determined that the producers and/or exporters of the subject merchandise under review did not apply for or receive benefits under these programs during the POR:

A. *Industrial Development Loans Under Law 64/86*
B. *Grant Received Pursuant to the Community Initiative Concerning the Preparation of Enterprises for the Single Market (''PRISMA'')*
C. *European Regional Development Fund (''ERDF'') Programma Operativo Plurifondo (''P.O.P.'') Grant*
D. *European Regional Development Fund (''ERDF'') Programma Operativo Multiregionale (''P.O.M.'') Grant*
E. *Certain Social Security Reductions and Exemptions—Sgravi (including Law 223/91, Article 8, Paragraph 4 and Article 25, Paragraph 9; and Law 196/97)*
F. *Law 236/93 Training Grants*
G. *Law 1329/65 Interest Contributions (''Sabatini Law'') (Formerly Lump-Sum Interest Payment Under the Sabatini Law for Companies in Southern Italy)*
H. *Development Grants Under Law 30 of 1984*
I. *Law 908/55 Fondo di Rotazione Iniziative Economiche (Revolving Fund for Economic Initiatives) Loans*
J. *Brescia Chamber of Commerce Training Grants*
K. *Ministerial Decree 87/02*
L. *Law 10/91 Grants to Fund Energy Conservation*
M. *Export Restitution Payments*
N. *Export Credits Under Law 227/77*
O. *Capital Grants Under Law 675/77*
P. *Retraining Grants Under Law 675/77*
Q. *Interest Contributions on Bank Loans Under Law 675/77*
R. *Preferential Financing for Export Promotion Under Law 394/81*
S. *Urban Redevelopment Under Law 181*
T. *Industrial Development Grants Under Law 183/76*
U. *Interest Subsidies Under Law 598/94*
V. *Duty-Free Import Rights*
W. *Law 113/86 Training Grants*
X. *European Agricultural Guidance and Guarantee Fund*
Y. *Law 341/95 Interest Contributions on Debt Consolidation Loans (Formerly Debt Consolidation Law 341/95)*
Z. *Interest Grants Financed by IRI Bonds*
AA. *Article 44 of Law 448/01*
BB. *Law 289/02*
  (1) *Article 63—Increase in Employment*
CC. *Law 662/96—Patti Territoriali*
DD. *Law 662/96—Contratto di Programma*

IV. Previously Terminated Programs

A. *Regional Tax Exemptions Under IRAP*
B. *VAT Reductions Under Laws 64/86 and 675/55*
C. *Corporate Income Tax (''IRPEG'') Exemptions*
D. *Remission of Taxes on Export Credit Insurance Under Article 33 of Law 227/77*
E. *Export Marketing Grants Under Law 304/90*
F. *Tremonti Law 383/01*
G. *Social Security Reductions and Exemptions—Sgravi*
  (1) *Article 44 of Law 448/01*
  (2) *Law 337/90*
  (3) *Law 863/84*
  (4) *Law 196/97*

Preliminary Results of Review

In accordance with 19 CFR 351.221(b)(4)(i), we calculated individual subsidy rates for the respondents, De Cecco, Fabianelli, Pallante and Tomasello.

For the period January 1, 2009, through December 31, 2009, we preliminarily find the net subsidy rates for the producers/exporters under review to be as follows:

Producer/exporter	Net subsidy rate (percent)
F.lli De Cecco di Filippo Fara San Martino S.p.A	[1] 0.39
Pastificio Fabianelli S.p.A	0.00
Molino e Pastificio Tomasello S.p.A	4.79
Pastificio Antonio Pallante, S.r.L	1.00

[1] (de minimis)

Assessment Rates

If these preliminary results are adopted in our final results of this review, because the countervailing duty rates for De Cecco and Fabianelli are less than 0.5 percent and are, thus, *de minimis,* the Department will instruct U.S. Customs and Border Protection (''CBP'') to liquidate shipments of certain pasta by De Cecco and Fabianelli from January 1, 2009, through December 31, 2009, without regard to countervailing duties. For all entries by Tomasello and Pallante, we will instruct CBP to assess countervailing duties on all shipments at the net subsidy rates listed above.

For all other companies that were not reviewed (except Barilla G. e R. F.lli S.p.A. and Gruppo Agricoltura Sana S.r.l., which are excluded from the order, and Pasta Lensi S.r.l., which was revoked from the order), the Department has directed CBP to assess countervailing duties on all entries between January 1, 2009, and December 31, 2009, at the rates in effect at the time of entry.

The Department intends to issue appropriate assessment instructions directly to CBP 15 days after publication of the final results of this review.

Cash Deposit Instructions

The Department also intends to instruct CBP to collect cash deposits of estimated countervailing duties in the amounts shown above with the exception of De Cecco and Fabianelli. For De Cecco and Fabianelli, no cash deposits of estimated duties will be required because their rate is *de minimis.* For all non-reviewed firms (except Barilla G. e R. F.lli S.p.A. and Gruppo Agricoltura Sana S.r.l., which are excluded from the order, and Pasta Lensi S.r.l., which was revoked from the order), we will instruct CBP to collect cash deposits of estimated countervailing duties at the most recent company-specific or all-others rate applicable to the company. These rates shall apply to all non-reviewed companies until a review of a company assigned these rates is requested. These cash deposit requirements, when imposed, shall remain in effect until further notice.

Disclosure and Public Comment

Pursuant to 19 CFR 351.224(b), the Department will disclose to parties to the proceeding any calculations performed in connection with these preliminary results within five days after the date of the public announcement of this notice.

Pursuant to 19 CFR 351.309(c)(ii), interested parties may submit written arguments in case briefs within 30 days of the date of publication of this notice. Rebuttal briefs, limited to issues raised in case briefs, may be filed no later than five days after the date of filing the case briefs, in accordance with 19 CFR 351.309(d). Parties who submit case briefs or rebuttal briefs in this proceeding are requested to submit with each argument: (1) A statement of the issue, and (2) a brief summary of the

argument with an electronic version included. Copies of case briefs and rebuttal briefs must be served on interested parties in accordance with 19 CFR 351.303(f).

Interested parties may request a hearing within 30 days after the date of publication of this notice, pursuant to 19 CFR 351.310(c).

The Department will publish a notice of the final results of this administrative review within 120 days from the publication of these preliminary results, in accordance with section 751(a)(3) of the Act.

We are issuing and publishing these results in accordance with sections 751(a)(1) and 777(i)(1) of the Act and 19 CFR 351.221(b)(4).

Dated: August 1, 2011.

Ronald K. Lorentzen,

Deputy Assistant Secretary for Import Administration.

[FR Doc. 2011–20070 Filed 8–5–11; 8:45 am]

BILLING CODE 3510–DS–P

DEPARTMENT OF COMMERCE

International Trade Administration

[A–570–934]

1-Hydroxyethylidene-1, 1-Diphosphonic Acid From the People's Republic of China: Final Results of Antidumping Duty Administrative Review and Final Rescission in Part

AGENCY: Import Administration, International Trade Administration, Department of Commerce.

SUMMARY: On April 7, 2011, the Department of Commerce (the ''Department'') published in the **Federal Register** its preliminary results of the administrative review of the antidumping duty order on 1-hydroxyethylidene-1, 1-diphosphonic acid (''HEDP'') from the People's Republic of China (''PRC''), covering the period April 23, 2009 through March 31, 2010.[1] The Department gave interested parties an opportunity to comment on the *Preliminary Results.* After reviewing the interested parties' comments, the Department has not made changes to the margin for the final results. The final dumping margin for this review is listed in the ''Final Results of Review'' section below.

DATES: *Effective Date:* August 8, 2011.

FOR FURTHER INFORMATION CONTACT: Shawn Higgins, AD/CVD Operations, Office 4, Import Administration, International Trade Administration, U.S. Department of Commerce, 14th Street and Constitution Avenue, NW., Washington, DC 20230; telephone: (202) 482–0679.

SUPPLEMENTARY INFORMATION:

Background

Compass Chemical LLC (''Petitioner'') and Jiangsu Jianghai Chemical Group Co., Ltd. (''Jiangsu Jianghai'') submitted case briefs on May 9, 2011 [2] and rebuttal briefs on May 16, 2011.[3] On July 1, 2011, the Department placed additional information on the record.[4] Jiangsu Jianghai submitted comments on this information on July 15, 2011.

Analysis of Comments Received

All issues raised by parties in their case and rebuttal briefs are addressed in the Memorandum from Christian Marsh, Deputy Assistant Secretary for Antidumping and Countervailing Duty Operations, to Ronald K. Lorentzen, Deputy Assistant Secretary for Import Administration, ''Issues and Decision Memorandum for the Final Results of the Antidumping Duty Administrative Review of 1-Hydroxyethylidene-1, 1-Diphosphonic Acid from the People's Republic of China'' (August 2, 2011) (''Issues and Decision Memorandum''), which is hereby adopted by this notice. A list of the issues addressed in the Issues and Decision Memorandum is attached to this notice as an appendix. The Issues and Decision Memorandum is a public document and is on file in the Central Records Unit, Main Commerce Building, Room 7046, and is accessible on the Web at *http://ia.ita.doc.gov/frn.* The paper copy and electronic version of the memorandum are identical in content.

Changes Since the Preliminary Results

Based on an analysis of the comments received and other information on record of this review, the Department has modified its corroboration analysis since the *Preliminary Results.* Specifically, the Department has supplemented its corroboration analysis from the *Preliminary Results* by using a surrogate value for phosphorus trichloride on the record of this review to corroborate both the surrogate value for phosphorus trichloride used in the petition and the petition's normal value.[5]

Scope of the Order

The merchandise subject to the order includes all grades of aqueous, acidic (non-neutralized) concentrations of 1-hydroxyethylidene-1, 1-diphosphonic acid,[6] also referred to as hydroxethylidenediphosphonic acid, hydroxyethanediphosphonic acid, acetodiphosphonic acid, and etidronic acid. The CAS (Chemical Abstract Service) registry number for HEDP is 2809–21–4. The merchandise subject to the order is currently classified in the Harmonized Tariff Schedule of the United States (''HTSUS'') at subheading 2931.00.9043. It may also enter under HTSUS subheading 2811.19.6090. While HTSUS subheadings are provided for convenience and customs purposes only, the written description of the scope of the order is dispositive.

Final Partial Rescission of the Administrative Review

In the *Preliminary Results,* the Department stated that it intended to rescind this administrative review with respect to Changzhou Wujin Fine Chemical Factory Co., Ltd. (''Wujin Fine'') in accordance with 19 CFR 351.213(d)(3). No parties commented on the Department's intent to rescind. Because there is no information or argument on the record of this review that warrants reconsideration of the Department's intent to rescind, the Department is rescinding this administrative review with respect to Wujin Fine.

Separate Rates

In the *Preliminary Results,* the Department determined that Jiangsu Jianghai does not qualify for a separate rate in this review and should be treated as part of the PRC-wide entity because it has failed to demonstrate an absence of *de jure* and *de facto* government control and did not fully participate in

[1] *See 1-Hydroxyethylidene-1, 1-Diphosphonic Acid From the People's Republic of China: Preliminary Results of Antidumping Duty Administrative Review and Intent To Rescind Review in Part,* 76 FR 19325 (April 7, 2011) (''*Preliminary Results*'').

[2] *See* Letter from Petitioner to the Secretary of Commerce, ''1-Hydroxyethylidene-1, 1-Diphosphonic Acid from the People's Republic of China'' (May 9, 2011); Letter from Jiangsu Jianghai to the Secretary of Commerce, ''1-Hydroxyethylidene-1, 1-Diphosphonic Acid from the People's Republic of China; A–570–934'' (May 9, 2011).

[3] *See* Letter from Petitioner to the Secretary of Commerce, ''1-Hydroxyethylidene-1, 1-Diphosphonic Acid from the People's Republic of China'' (May 16, 2011); Letter from Jiangsu Jianghai to the Secretary of Commerce, ''1-Hydroxyethylidene-1, 1-Diphosphonic Acid from the People's Republic of China; A–570–934'' (May 16, 2011).

[4] *See* Memorandum from Shawn Higgins, International Trade Compliance Analyst, AD/CVD Operations, Office 4, to Interested Parties, ''Administrative Review of the Antidumping Duty Order on 1-Hydroxyethylidene-1, 1-Diphosphonic Acid from the People's Republic of China: Placing Additional Information on Record'' (July 1, 2011).

[5] *See infra Corroboration* section; Issues and Decision Memorandum at Issue 4.

[6] $C_2H_8O_7P_2$ or $C(CH_3)(OH)(PO_3H_2)_2$.

this administrative review. Parties commented on the Department's decision to deny Jiangsu Jianghai a separate rate. For the final results, the Department has analyzed these comments and continues to find that Jiangsu Jianghai has not qualified for a separate rate in this review and, therefore, will be treated as part of the PRC-wide entity.[7]

Use of Facts Available and Adverse Facts Available ("AFA")

In the *Preliminary Results,* the Department preliminarily determined to use an inference that is adverse to the interests of the PRC-wide entity in selecting from among the facts otherwise available and assigned the PRC-wide entity an AFA rate of 72.42 percent, which was the margin calculated in the petition, as adjusted by the Department for initiation. Parties commented both on the Department's decision to apply AFA and the Department's choice of the AFA rate assigned to the PRC-wide entity. For the final results, the Department has analyzed these comments and continues to find that it is appropriate to assign an AFA rate of 72.42 percent to the PRC-wide entity.[8]

Corroboration of Secondary Information

In the *Preliminary Results,* the Department preliminarily determined that the 72.42 percent petition rate has probative value and, therefore, is corroborated to the extent practicable, in accordance with section 776(c) of the Act. Parties commented on the Department's corroboration of the 72.42 percent petition rate. For the final results, the Department has analyzed these comments and continues to find that the 72.42 percent petition rate is corroborated to the extent practicable.[9]

Final Results of Review

The Department has determined that the following weighted-average dumping margins exist for the period April 23, 2009, through March 31, 2010:

Exporter	Antidumping duty percent margin
PRC-Wide Entity [10]	72.42

[7] *See* Issues and Decision Memorandum at Issue 2.

[8] *See* Issues and Decision Memorandum at Issues 3–4.

[9] *See* Issues and Decision Memorandum at Issue 4.

Assessment Rates

Pursuant to 19 CFR 351.212, the Department will determine, and Customs and Border Protection ("CBP") shall assess, antidumping duties on all appropriate entries of subject merchandise in accordance with the final results of this review. The Department intends to instruct CBP to liquidate entries containing subject merchandise exported by the PRC-wide entity at the PRC-wide rate the Department determines in the final results of this review. The Department intends to issue appropriate assessment instructions directly to CBP 15 days after publication of the final results of this review.

Cash Deposit Requirements

The following cash deposit requirements will be effective upon publication of the final results of this administrative review for all shipments of the subject merchandise from the PRC entered, or withdrawn from warehouse, for consumption on or after the publication date, as provided for by section 751(a)(2)(C) of the Act: (1) For previously investigated or reviewed PRC and non-PRC exporters not listed above that have separate rates, the cash deposit rate will continue to be the exporter-specific rate published for the most recent period; (2) for all PRC exporters of subject merchandise which have not been found to be entitled to a separate rate, the cash deposit rate will be the PRC-wide rate established in the final results of this review (*i.e.,* 72.42 percent); and (3) for all non-PRC exporters of subject merchandise which have not received their own rate, the cash deposit rate will be the rate applicable to the PRC exporters that supplied that non-PRC exporter. These deposit requirements, when imposed, shall remain in effect until further notice.

Notification to Importers

This notice also serves as a preliminary reminder to importers of their responsibility under 19 CFR 351.402(f) to file a certificate regarding the reimbursement of antidumping duties prior to liquidation of the relevant entries during this review period. Failure to comply with this requirement could result in the Secretary presuming that reimbursement of antidumping duties occurred and, subsequently, the assessment of double antidumping duties.

The Department is issuing and publishing these final results of administrative review in accordance with sections 751(a)(1) and 777(i)(1) of the Act and 19 CFR 351.221(b)(5).

[10] Jiangsu Jianghai is part of the PRC-wide entity.

Dated: August 2, 2011.

Ronald K. Lorentzen,

Deputy Assistant Secretary for Import Administration.

Appendix

Issue 1: Whether the Department erred in initiating this administrative review of Jiangsu Jianghai

Issue 2: Whether Jiangsu Jianghai should be considered part of the PRC-wide entity

Issue 3: Whether Jiangsu Jianghai should receive a rate based on AFA

Issue 4: Whether the Department should continue to assign the 72.42 percent petition rate to the PRC-wide entity as the AFA rate

[FR Doc. 2011–20040 Filed 8–5–11; 8:45 am]

BILLING CODE 3510–DS–P

DEPARTMENT OF COMMERCE

International Trade Administration

[A–570–865]

Certain Hot-Rolled Carbon Steel Flat Products From the People's Republic of China: Preliminary Intent To Rescind the Review

AGENCY: Import Administration, International Trade Administration, Department of Commerce.

SUMMARY: The Department of Commerce ("Department") is conducting an administrative review of the antidumping duty order on certain hot-rolled carbon steel flat products ("hot-rolled") from the People's Republic of China ("PRC") for the period of review ("POR") November 1, 2009, through October 31, 2010. As discussed below, we preliminarily intend to rescind this review.

DATES: *Effective Date:* August 8, 2011.

FOR FURTHER INFORMATION CONTACT: Paul Walker or Steven Hampton, AD/CVD Operations, Office 9, Import Administration, International Trade Administration, Department of Commerce, 14th Street and Constitution Avenue, NW., Washington, DC 20230; telephone: (202) 482–0413 or (202) 482–0116, respectively.

SUPPLEMENTARY INFORMATION:

Background

On November 29, 2001, the Department published the antidumping duty order on hot-rolled from the PRC. *See Notice of the Antidumping Duty Order: Certain Hot-Rolled Carbon Steel Flat Products From the People's Republic of China,* 66 FR 59561 (November 29, 2001) ("*Order*"). On

November 30, 2010, Nucor Corporation (''Nucor''), domestic producers of hot-rolled, requested that the Department conduct an administrative review of Baosteel Group Corporation, Shanghai Baosteel International Economic & Trading Co., Ltd., and Baoshan Iron and Steel Co., Ltd. (collectively ''Baosteel'').[1] On December 28, 2010, the Department published in the **Federal Register** a notice of initiation for an administrative review of the *Order* for the period November 1, 2009, through October 31, 2010.[2] On February 4, 2011, the Department released the U.S. Customs and Border Protection (''CBP'') data to parties for comments. On February 10, 2011, Baosteel requested that the Department obtain the customs entry and commercial invoice documents pertaining to the CBP data. On February 17, 2011, Baosteel submitted comments on the CBP data. Baosteel claimed that it did not export subject merchandise during the POR and the CBP information is either incorrect or relates to non-subject merchandise which may have been misclassified. On March 17, 2011, the Department released the U.S. entry documents that it obtained from CBP. On March 24, 2011, Nucor submitted comments on the U.S. entry documents and asked the Department to issue a full questionnaire to Baosteel. On March, 28, 2011, Baosteel submitted rebuttal comments to Nucor's March 24, 2011 submission. Baosteel claimed that the entry documents do not reveal that Baosteel sold subject merchandise to the United States. On June 2, 2011, the Department released the test report and mill certificate for the merchandise at issue, which it obtained from CBP. On June 14, 2011, Nucor submitted comments on the test report and mill certificate. Nucor argued that subject merchandise entered the United States and stated that the Department should issue questionnaires to Baosteel. On June 14, 2011, Baosteel also submitted comments on the test report and mill certificate. Baosteel argued that the mere fact that Baosteel is the manufacturer of the product does not show that Baosteel made sales of subject merchandise to the United States. On June 16, 2011, Baosteel submitted comments with an excerpt from a recent determination in which the Department clearly stated its policy regarding its knowledge test for NME purposes.[3]

Scope of the Order

The products covered by the order are certain hot-rolled carbon steel flat products of a rectangular shape, of a width of 0.5 inch or greater, neither clad, plated, nor coated with metal and whether or not painted, varnished, or coated with plastics or other non-metallic substances, in coils (whether or not in successively superimposed layers), regardless of thickness, and in straight lengths of a thickness of less than 4.75 mm and of a width measuring at least 10 times the thickness. Universal mill plate (*i.e.,* flat-rolled products rolled on four faces or in a closed box pass, of a width exceeding 150 mm, but not exceeding 1250 mm, and of a thickness of not less than 4.0 mm, not in coils and without patterns in relief) of a thickness not less than 4.0 mm is not included within the scope of the order. Specifically included within the scope of the order are vacuum degassed, fully stabilized (commonly referred to as interstitial-free (''IF'')) steels, high strength low alloy (''HSLA'') steels, and the substrate for motor lamination steels. IF steels are recognized as low carbon steels with micro-alloying levels of elements such as titanium or niobium (also commonly referred to as columbium), or both, added to stabilize carbon and nitrogen elements. HSLA steels are recognized as steels with micro-alloying levels of elements such as chromium, copper, niobium, vanadium, and molybdenum. The substrate for motor lamination steels contains micro-alloying levels of elements such as silicon and aluminum.

Steel products included in the scope of the order, regardless of definitions in the Harmonized Tariff Schedule of the United States (''HTSUS''), are products in which: (i) iron predominates, by weight, over each of the other contained elements; (ii) the carbon content is 2 percent or less, by weight; and, (iii) none of the elements listed below exceeds the quantity, by weight, respectively indicated:

1.80 percent of manganese, or
2.25 percent of silicon, or
1.00 percent of copper, or
0.50 percent of aluminum, or
1.25 percent of chromium, or
0.30 percent of cobalt, or
0.40 percent of lead, or
1.25 percent of nickel, or
0.30 percent of tungsten, or
0.10 percent of molybdenum, or
0.10 percent of niobium, or
0.15 percent of vanadium, or
0.15 percent of zirconium.

All products that meet the physical and chemical description provided above are within the scope of the order unless otherwise excluded. The following products, for example, are outside or specifically excluded from the scope of the order:

- Alloy hot-rolled steel products in which at least one of the chemical elements exceeds those listed above (including, e.g., American Society for Testing and Materials (''ASTM'') specifications A543, A387, A514, A517, A506).
- Society of Automotive Engineers (''SAE'')/American Iron & Steel Institute (''AISI'') grades of series 2300 and higher.
- Ball bearing steels, as defined in the HTSUS.
- Tool steels, as defined in the HTSUS.
- Silico-manganese (as defined in the HTSUS) or silicon electrical steel with a silicon level exceeding 2.25 percent.
- ASTM specifications A710 and A736.
- USS abrasion-resistant steels (USS AR 400, USS AR 500). All products (proprietary or otherwise) based on an alloy ASTM specification (sample specifications: ASTM A506, A507).
- Non-rectangular shapes, not in coils, which are the result of having been processed by cutting or stamping and which have assumed the character of articles or products classified outside chapter 72 of the HTSUS.

The merchandise subject to the order is classified in the HTSUS at subheadings: 7208.10.15.00, 7208.10.30.00, 7208.10.60.00, 7208.25.30.00, 7208.25.60.00, 7208.26.00.30, 7208.26.00.60, 7208.27.00.30, 7208.27.00.60, 7208.36.00.30, 7208.36.00.60, 7208.37.00.30, 7208.37.00.60, 7208.38.00.15, 7208.38.00.30, 7208.38.00.90, 7208.39.00.15, 7208.39.00.30, 7208.39.00.90, 7208.40.60.30, 7208.40.60.60, 7208.53.00.00, 7208.54.00.00, 7208.90.00.00, 7211.14.00.90, 7211.19.15.00, 7211.19.20.00, 7211.19.30.00, 7211.19.45.00, 7211.19.60.00, 7211.19.75.30, 7211.19.75.60, and 7211.19.75.90. Certain hot-rolled carbon steel flat products covered by the order, including: vacuum degassed fully stabilized; high strength low alloy; and the substrate for motor lamination steel

[1] *See Certain Hot-Rolled Carbon Steel Flat Products from the People's Republic of China: Final Rescission of Antidumping Duty Administrative Review,* 74 FR 40165 (August 11, 2009), at n.1.

[2] *See Initiation of Antidumping and Countervailing Duty Administrative Reviews and Request for Revocation In Part,* 75 FR 81565 (December 28, 2010).

[3] *Certain Oil Country Tubular Goods from the People's Republic of China: Final Determination of Sales at Less Than Fair Value, Affirmative Final Determination of Critical Circumstances and Final Determination of Targeted Dumping,* 75 FR 20335 (April 19, 2010), and accompanying Issues and Decision Memorandum at Comment 31.

may also enter under the following tariff numbers: 7225.11.00.00, 7225.19.00.00, 7225.30.30.50, 7225.30.70.00, 7225.40.70.00, 7225.99.00.90, 7226.11.10.00, 7226.11.90.30, 7226.11.90.60, 7226.19.10.00, 7226.19.90.00, 7226.91.50.00, 7226.91.70.00, 7226.91.80.00, and 7226.99.00.00. Subject merchandise may also enter under 7210.70.30.00, 7210.90.90.00, 7211.14.00.30, 7212.40.10.00, 7212.40.50.00, and 7212.50.00.00. Although the HTSUS subheadings are provided for convenience and customs purposes, the written description of the merchandise subject to the order is dispositive.

Preliminary Rescission of Review

The Department has analyzed all of the information on the record regarding alleged U.S. entries of subject merchandise during the POR by Baosteel. As noted above, the Department placed information on the record from CBP that indicated that subject merchandise produced by Baosteel may have entered the United States during the POR. Because the information found in the CBP documentation is proprietary, for further discussion of this issue please *see* the Memorandum to the File, through Scot T. Fullerton, Program Manager, from Steven Hampton, International Trade Analyst, ''Certain Hot-Rolled Carbon Steel Flat Products from the People's Republic of China: Analysis of CBP Entry Documentation,'' (''Analysis of CBP Entry Documentation'') dated concurrently with this notice. Based on its analysis of the record information, the Department preliminarily finds that the merchandise from the entry documentation is not subject to the scope of the antidumping duty order on hot-rolled carbon steel flat products from the PRC.[4]

Because there is no information on the record which indicates that Baosteel made sales, shipments, or entries to the United States of subject merchandise during the POR, and because Baosteel is the only company subject to this administrative review, in accordance with 19 CFR 351.213(d)(3) and consistent with our practice, we are preliminarily rescinding this review of the antidumping duty order on hot-rolled from the PRC for the period of November 1, 2009, through October 31, 2010.[5] If the Department adopts these preliminary results for its final results, the cash deposit rate for Baosteel will continue to be the rate established in the most recently completed segment of this proceeding. If the Department continues to find for its final results that the merchandise is not subject to the scope of the antidumping duty order on certain hot-rolled carbon steel flat products from the PRC, we will refer this matter to CBP to determine the appropriate Customs classification for the merchandise in question.

Comments

Interested parties may submit comments for consideration in the Department's final results not later than 30 days after publication of this notice. *See* 19 CFR 351.309(c)(ii). Responses to those comments may be submitted not later than five days following submission of the comments. *See* 19 CFR 351.309(d). All written comments must be submitted in accordance with 19 CFR 351.303, and must be served on interested parties on the Department's service list in accordance with 19 CFR 351.303(f)(3). Interested parties may also request a hearing within 30 days of publication of this notice. *See* 19 CFR 351.310. The Department will issue the final results of this administrative review, which will include the results of its analysis of issues raised in any such comments, within 120 days of publication of the preliminary results, and will publish these results in the **Federal Register.**

Notification to Importers

This notice serves as a preliminary reminder to importers of their responsibility under 19 CFR 351.402(f)(2) to file a certificate regarding the reimbursement of antidumping duties prior to liquidation of the relevant entries during this review period. Failure to comply with this requirement could result in the Secretary's presumption that reimbursement of antidumping duties occurred and the subsequent assessment of double antidumping duties.

This notice is published in accordance with sections 751 and 777(i)(1) of the Tariff Act of 1930, as amended, and 19 CFR 351.213(d)(4).

Dated: July 29, 2011.

Ronald K. Lorentzen,

Deputy Assistant Secretary for Import Administration.

[FR Doc. 2011–20076 Filed 8–5–11; 8:45 am]

BILLING CODE 3510–DS–P

[4] *See* Analysis of CBP Entry Documentation.

[5] *See Final Rescission of Antidumping Duty Administrative Review: Certain Hot-Rolled Carbon Steel Flat Products from the People's Republic of China,* 72 FR 41710 (July 31, 2007).

DEPARTMENT OF COMMERCE

International Trade Administration

North American Free-Trade Agreement, Article 1904; Binational Panel Reviews: Notice of Termination of Panel Review

AGENCY: NAFTA Secretariat, United States Section, International Trade Administration, Department of Commerce.

ACTION: Notice of Termination of Panel Review of the Final Results of the first administrative review of the antidumping duty order on Citric Acid and Certain Citrate Salts from Canada, Secretariat File No. USA–CDA–2011–1904–03.

SUMMARY: Pursuant to the negotiated settlement between the United States and Canadian industries, the panel review of the above-noted case is terminated as of August 2, 2011. No panel has been appointed to review this panel.

FOR FURTHER INFORMATION CONTACT: Ellen Bohon, United States Secretary, NAFTA Secretariat, Suite 2061, 14th and Constitution Avenue, NW., Washington, DC 20230, (202) 482–5438.

SUPPLEMENTARY INFORMATION: Chapter 19 of the North American Free-Trade Agreement (''Agreement'') established a mechanism to replace domestic judicial review of final determinations in antidumping and countervailing duty cases involving imports from a NAFTA country with review by independent binational panels. When a Request for Panel Review is filed, a panel is established to act in place of national courts to review expeditiously the final determination to determine whether it conforms to the antidumping or countervailing duty law of the country that made the determination.

Under Article 1904 of the Agreement, which came into force on January 1, 1994, the Government of the United States, the Government of Canada, and the Government of Mexico established *Rules of Procedure for Article 1904 Binational Panel Reviews* (''Rules''). These Rules were published in the **Federal Register** on February 23, 1994 (59 FR 8686). The panel review in this matter was requested Pursuant to these Rules and terminated in accordance with the settlement agreement.

Dated: August 3, 2011

Ellen Bohon,

United States Secretary, NAFTA Secretariat.

[FR Doc. 2011–20030 Filed 8–5–11; 8:45 am]

BILLING CODE 3510–GT–P

DEPARTMENT OF COMMERCE

National Oceanic and Atmospheric Administration

RIN 0648–XA620

Endangered Species; File No. 1551

AGENCY: National Marine Fisheries Service (NMFS), National Oceanic and Atmospheric Administration (NOAA), Commerce.

ACTION: Notice; receipt of application for permit modification.

SUMMARY: Notice is hereby given that NMFS, Southeast Fisheries Science Center (SEFSC), 75 Virginia Beach Drive, Miami, FL 33149 (Responsible Party: Bonnie Ponwith), has requested a modification to scientific research Permit No. 1551–02.

DATES: Written, telefaxed, or e-mail comments must be received on or before September 7, 2011.

ADDRESSES: The application and related documents are available for review by selecting ''Records Open for Public Comment'' from the *Features* box on the Applications and Permits for Protected Species (APPS) home page, *https://apps.nmfs.noaa.gov,* and then selecting File No. 1551–03 from the list of available applications.

These documents are also available upon written request or by appointment in the following offices:

Permits, Conservation and Education Division, Office of Protected Resources, NMFS, 1315 East-West Highway, Room 13705, Silver Spring, MD 20910; phone (301) 427–8401; fax (301) 713–0376; and

Southeast Region, NMFS, 263 13th Avenue South, Saint Petersburg, FL 33701; phone (727) 824–5312; fax (727) 824–5309.

Written comments on this application should be submitted to the Chief, Permits, Conservation and Education Division, at the above address. Comments may also be submitted by facsimile to (301) 713–0376, or by e-mail to *NMFS.Pr1Comments@noaa.gov.* Please include the File No. in the subject line of the e-mail comment.

Those individuals requesting a public hearing should submit a written request to the Chief, Permits, Conservation and Education Division at the address listed above. The request should set forth the specific reasons why a hearing on this application would be appropriate.

FOR FURTHER INFORMATION CONTACT: Amy Hapeman or Carrie Hubard, (301) 427–8401.

SUPPLEMENTARY INFORMATION: The subject modification to Permit No. 1551–02 is requested under the authority of the Endangered Species Act of 1973, as amended (16 U.S.C. 1531 *et seq.*) and the regulations governing the taking, importing, and exporting of endangered and threatened species (50 CFR 222–226).

Permit No. 1551, issued on July 24, 2008 (73 FR 44225), authorizes research on loggerhead (*Caretta caretta*), green (*Chelonia mydas*), Kemp's ridley (*Lepidochelys kempii*), olive ridley (*Lepidochelys olivacea*), hawksbill *(Eretmochelys imbricata*), and leatherback (*Dermochelys coriacea*) sea turtles in coastal and inshore waters of the North Atlantic, Gulf of Mexico and Caribbean Sea. Turtles may be taken by harassment during aerial and vessel surveys and direct capture. Researchers may also access animals legally captured incidental to fishing activities. Researchers are authorized to conduct a variety of sampling and tagging activities in order to collect biological and ecological information on these species that will aid conservation of the species.

The SEFSC requests a modification to the permit to increase the number of sea turtles (an additional 75 leatherback, 1,150 loggerhead, 75 green, 100 Kemp's ridley, and 900 unidentified hardshell sea turtles annually) that may be harassed during aerial surveys. This work would assess potential injury from Mississippi Canyon 252 oil on sea turtle populations in the northern Gulf of Mexico as part of the post-spill Natural Resources Damage Assessment of the BP Deepwater Horizon event. The modification would be valid through July 1, 2013.

Dated: August 2, 2011.

P. Michael Payne,

Chief, Permits, Conservation and Education Division, Office of Protected Resources, National Marine Fisheries Service.

[FR Doc. 2011–20074 Filed 8–5–11; 8:45 am]

BILLING CODE 3510–22–P

DEPARTMENT OF COMMERCE

National Oceanic and Atmospheric Administration

RIN 0648–XA160

Marine Mammals; File No. 15330

AGENCY: National Marine Fisheries Service (NMFS), National Oceanic and Atmospheric Administration (NOAA), Commerce.

ACTION: Notice; issuance of permit.

SUMMARY: Notice is hereby given that a permit has been issued to Robin Baird, PhD, Cascadia Research, 218½ W. 4th Avenue, Olympia, WA 98501 to take marine mammals in the Pacific Ocean for the purposes of scientific research.

ADDRESSES: The permit and related documents are available for review upon written request or by appointment in the following offices: See **SUPPLEMENTARY INFORMATION**.

FOR FURTHER INFORMATION CONTACT: Laura Morse or Carrie Hubard, (301) 427–8401.

SUPPLEMENTARY INFORMATION: On February 25, 2011, notice was published in the **Federal Register** (76 FR 10560) that a request for a permit to conduct research on forty species of cetaceans and unidentified mesoplodon and baleen species in all U.S. and international waters in the Pacific Ocean, including Alaska, Washington, Oregon, California, Hawaii, and other U.S. territories had been submitted by the above-named applicant. The requested permit has been issued under the authority of the Marine Mammal Protection Act of 1972, as amended (16 U.S.C. 1361 *et seq.*), the regulations governing the taking and importing of marine mammals (50 CFR part 216), the Endangered Species Act of 1973, as amended (ESA; 16 U.S.C. 1531 *et seq.*), the regulations governing the taking, importing, and exporting of endangered and threatened species (50 CFR parts 222–226), and the Fur Seal Act of 1966, as amended (16 U.S.C. 1151 *et seq.*).

Authorized research will include harassment of 40 cetacean species through vessel approach for sighting surveys, photographic identification, behavioral research, opportunistic sampling (breath, sloughed skin, fecal material, and prey remains), and aerial over-flights for the purpose of locating animals and conducting aerial validation studies. All cetacean species (except harbor porpoise (*Phocoena phocoena*), right whales (*Eubalaena japonica*), and Cook Inlet beluga whales (*Delphinapterus leucas*)) and unidentified mesoplodon and baleen species will be targeted for dart and/or suction-cup tagging. Import and export of marine mammal prey specimens, sloughed skin, fecal and breath samples obtained is authorized. Seven species of pinnipeds may be incidentally harassed during research activities. The permit is valid until August 1, 2016.

An environmental assessment (EA) was prepared analyzing the effects of the permitted activities on the human environment in compliance with the National Environmental Policy Act of 1969 (42 U.S.C. 4321 *et seq.*). Based on the analyses in the EA, NMFS determined that issuance of the permit would not significantly impact the quality of the human environment and

that preparation of an environmental impact statement was not required. That determination is documented in a Finding of No Significant Impact (FONSI), signed on July 26, 2011.

As required by the ESA, issuance of this permit was based on a finding that such permit: (1) Was applied for in good faith; (2) will not operate to the disadvantage of such endangered species; and (3) is consistent with the purposes and policies set forth in section 2 of the ESA.

Documents may be reviewed in the following locations:

Permits, Conservation and Education Division, Office of Protected Resources, NMFS, 1315 East-West Highway, Room 13705, Silver Spring, MD 20910; phone (301) 713–2289; fax (301) 427–2521;

Northwest Region, NMFS, 7600 Sand Point Way, NE., BIN C15700, Bldg. 1, Seattle, WA 98115–0700; phone (206) 526–6150; fax (206) 526–6426;

Alaska Region, NMFS, P.O. Box 21668, Juneau, AK 99802–1668; phone (907) 586–7221; fax (907) 586–7249;

Southwest Region, NMFS, 501 West Ocean Blvd., Suite 4200, Long Beach, CA 90802–4213; phone (562) 980–4001; fax (562) 980–4018; and

Pacific Islands Region, NMFS, 1601 Kapiolani Blvd., Rm 1110, Honolulu, HI 96814–4700; phone (808) 973–2935; fax (808) 973–2941.

Dated: August 1, 2011.

P. Michael Payne,

Chief, Permits, Conservation and Education Division, Office of Protected Resources, National Marine Fisheries Service.

[FR Doc. 2011–20075 Filed 8–5–11; 8:45 am]

BILLING CODE 3510–22–P

DEPARTMENT OF COMMERCE

Patent and Trademark Office

Submission for OMB Review; Comment Request

The United States Patent and Trademark Office (USPTO) will submit to the Office of Management and Budget (OMB) for clearance the following proposal for collection of information under the provisions of the Paperwork Reduction Act (44 U.S.C. 35).

Agency: United States Patent and Trademark Office (USPTO).

Title: Admittance to Practice and Roster of Registered Patent Attorneys and Agents Admitted to Practice Before the United States Patent and Trademark Office (USPTO) (Proposed Addition).

Form Number(s): PTO–158RA.

Type of Request: Revision of a currently approved collection.

Burden: 60 hours annually.

Number of Respondents: 40 responses per year.

Avg. Hours per Response: The USPTO estimates that it will take the public approximately 1.5 hours to complete the Reasonable Accommodation Request, depending upon the situation.

Needs and Uses: The USPTO is introducing a new form, PTO–158RA Request for Reasonable Accommodation, to facilitate an applicant's request for reasonable accommodation when they apply for the examination for registration to practice before the USPTO. This new form will assist applicants in providing the USPTO with the correct and necessary supporting documentation through a standardized format.

The USPTO will use the information collected from the form to determine whether the applicant meets all of the necessary requirements for reasonable accommodation.

Affected Public: Individuals or households.

Frequency: On occasion.

Respondent's Obligation: Required to obtain or retain benefits.

OMB Desk Officer: Nicholas A. Fraser, e-mail: *Nicholas_A._Fraser@omb.eop.gov*.

Once submitted, the request will be publicly available in electronic format through the Information Collection Review page at *http://www.reginfo.gov*.

Paper copies can be obtained by:

- *E-mail: InformationCollection@uspto.gov.* Include ''0651–0012 proposed addition copy request'' in the subject line of the message.
- *Mail:* Susan K. Fawcett, Records Officer, Office of the Chief Information Officer, United States Patent and Trademark Office, P.O. Box 1450, Alexandria, VA 22313–1450.

Written comments and recommendations for the proposed information collection should be sent on or before September 7, 2011 to Nicholas A. Fraser, OMB Desk Officer, via e-mail to *Nicholas_A._Fraser@omb.eop.gov,* or by fax to 202–395–5167, marked to the attention of Nicholas A. Fraser.

Dated: August 3, 2011.

Susan K. Fawcett,

Records Officer, USPTO, Office of the Chief Information Officer.

[FR Doc. 2011–19970 Filed 8–5–11; 8:45 am]

BILLING CODE 3510–16–P

DEPARTMENT OF DEFENSE

Department of the Navy

Notice of Intent To Grant Exclusive Patent License Agreement; OxiCool, Inc.

AGENCY: Department of the Navy, DoD.

ACTION: Notice.

SUMMARY: The Department of the Navy gives notice of its intent to grant to OxiCool, Inc., of 4747 South Broad Street, The Navy Yard, Building 101, Suite LL40, Philadelphia, PA 19112–103, a revocable, nonassignable, exclusive license, in all fields of use on commercial and residential air conditioning systems, to practice in the United States, the Government-Owned invention, as identified in U.S. Patent Number 7,836,732 b2: Air Conditioning System, issued on November 23, 2010.

DATES: Anyone wishing to object to granting of this license must file written objections along with supporting evidence, if any, not later than August 23, 2011.

ADDRESSES: Written objections are to be filed with the Naval Air Warfare Center Aircraft Division, Office of Research and Technology Applications, *Attn:* Mr. Paul Fritz, Building 505, Room 117, 22473 Millstone Road, Patuxent River, MD 20670.

FOR FURTHER INFORMATION CONTACT: Mr. Paul Fritz, Naval Air Warfare Center, Office of Research and Technology Applications, Building 505, Room 117, 22473 Millstone Road, Patuxent River, MD 20670.

Authority: 35 U.S.C. 207, 37 CFR part 404.

Dated: August 2, 2011.

L.M. Senay,

Lieutenant, Judge Advocate General's Corps, U.S. Navy, Federal Register Liaison Officer.

[FR Doc. 2011–20034 Filed 8–5–11; 8:45 am]

BILLING CODE 3810–FF–P

DEPARTMENT OF ENERGY

Basic Energy Sciences Advisory Committee

AGENCY: Department of Energy, Office of Science.

ACTION: Notice of renewal of the Basic Energy Sciences Advisory Committee.

SUMMARY: Pursuant to Section 14(a)(2)(A) of the Federal Advisory Committee Act (Pub. L. 92–463), and in accordance with Title 41, Code of Federal Regulations, Section 102.3 65(a), and following consultation with the Committee Management Secretariat,

General Services Administration, notice is hereby given that the Basic Energy Sciences Advisory Committee will be renewed for a two-year period beginning July 29, 2011. The Committee provides advice and recommendations to the Director, Office of Science concerning the Basic Energy Sciences program.

Additionally, the renewal of the Basic Energy Sciences Advisory Committee has been determined to be essential to the conduct of the Department's mission and to be in the public interest in connection with the performance of duties imposed upon the Department of Energy by law and agreement. The Committee will operate in accordance with the provisions of the Federal Advisory Committee Act, and rules and regulations issued in implementation of that Act.

FOR FURTHER INFORMATION CONTACT: Ms. Harriet Kung, Designated Federal Officer, by telephone at (301) 903–3081.

Issued at Washington, DC, on July 29, 2011.

Carol A. Matthews,

Committee Management Officer.

[FR Doc. 2011–20013 Filed 8–5–11; 8:45 am]

BILLING CODE 6450–01–P

DEPARTMENT OF ENERGY

Environmental Management Site-Specific Advisory Board, Paducah

AGENCY: Department of Energy (DOE).

ACTION: Notice of open meeting.

SUMMARY: This notice announces a meeting of the Environmental Management Site-Specific Advisory Board (EM SSAB), Paducah. The Federal Advisory Committee Act (Pub. L. 92–463, 86 Stat. 770) requires that public notice of this meeting be announced in the **Federal Register.**

DATES: Thursday, August 25, 2011; 6 p.m.

ADDRESSES: Barkley Centre, 111 Memorial Drive, Paducah, Kentucky 42001

FOR FURTHER INFORMATION CONTACT: Reinhard Knerr, Deputy Designated Federal Officer, Department of Energy Paducah Site Office, Post Office Box 1410, MS–103, Paducah, Kentucky 42001, (270) 441–6825.

SUPPLEMENTARY INFORMATION:

Purpose of the Board: The purpose of the Board is to make recommendations to DOE–EM and site management in the areas of environmental restoration, waste management and related activities.

Tentative Agenda:

- Call to Order, Introductions, Review of Agenda.
- Deputy Designated Federal Officer's Comments.
- Federal Coordinator's Comments.
- Liaisons' Comments.
- Administrative Issues:
  - Review Work Plan.
- Subcommittee Chairs' Comments.
- Public Comments.
- Final Comments.
- Adjourn.

Breaks Taken as Appropriate

Public Participation: The EM SSAB, Paducah, welcomes the attendance of the public at its advisory committee meetings and will make every effort to accommodate persons with physical disabilities or special needs. If you require special accommodations due to a disability, please contact Reinhard Knerr as soon as possible in advance of the meeting at the telephone number listed above. Written statements may be filed with the Board either before or after the meeting. Individuals who wish to make oral statements pertaining to agenda items should contact Reinhard Knerr at the telephone number listed above. Requests must be received as soon as possible prior to the meeting and reasonable provision will be made to include the presentation in the agenda. The Deputy Designated Federal Officer is empowered to conduct the meeting in a fashion that will facilitate the orderly conduct of business. Individuals wishing to make public comments will be provided a maximum of five minutes to present their comments.

Minutes: Minutes will be available by writing or calling Reinhard Knerr at the address and phone number listed above. Minutes will also be available at the following Web site: *http://www.pgdpcab.energy.gov/2011Meetings.html.*

Issued at Washington, DC, on August 2, 2011.

LaTanya R. Butler,

Acting Deputy Committee Management Officer.

[FR Doc. 2011–20011 Filed 8–5–11; 8:45 am]

BILLING CODE 6450–01–P

DEPARTMENT OF ENERGY

Environmental Management Site-Specific Advisory Board, Hanford

AGENCY: Department of Energy (DoE).

ACTION: Notice of open meeting.

SUMMARY: This notice announces a meeting of the Environmental Management Site-Specific Advisory Board (EM SSAB), Hanford. The Federal Advisory Committee Act (Pub. L. 92–463, 86 Stat. 770) requires that public notice of this meeting be announced in the **Federal Register**.

DATES:

Thursday, September 8, 2011; 9 a.m.–5 p.m.

Friday, September 9, 2011; 8:30 a.m.–4 p.m.

ADDRESSES: Red Lion Hotel, 1415 5th Avenue, Seattle, WA 98101.

FOR FURTHER INFORMATION CONTACT: Paula Call, Federal Coordinator, Department of Energy Richland Operations Office, 825 Jadwin Avenue, P.O. Box 550, A7–75, Richland, WA, 99352; *Phone:* (509) 376–2048; or *E-mail: Paula.Call@rl.doe.gov.*

SUPPLEMENTARY INFORMATION: Purpose of the Board: The purpose of the Board is to make recommendations to DOE–EM and site management in the areas of environmental restoration, waste management, and related activities.

Tentative Agenda:

- Annual Tri-Party Agency Year-End Review from the U.S. Department of Energy-Richland Operations Office and Office of River Protection and, the Washington State Department of Ecology and the U.S. Environmental Protection Agency, including American Recovery and Reinvestment Act work progress.
- Committee Updates, including: Tank Waste Committee; River and Plateau Committee; Health, Safety and Environmental Protection Committee; Public Involvement Committee; and Budgets and Contracts Committee.
- Life-Cycle Scope, Schedule and Cost Report.
- Potential Board Advice:
  - Third Comprehensive Environmental Response, Compensation, and Liability. Act Five-Year Review.
  - Waste Management Area-C.
  - Proposed Plan for Clean Up of Plutonium Sites on the Central Plateau.
  - EM SSAB draft letters/advice.
- Board Business:
  - Finalize Hanford Advisory Board/Tri-Party Agreement Agencies Fiscal Year (FY) 2012 priorities.
  - Finalize FY 2012 work plan and calendar.
  - Process Manual Revisions Discussion.
- Issue Manager.
- Advice Development.

Public Participation: The meeting is open to the public. The EM SSAB, Hanford, welcomes the attendance of the public at its advisory committee meetings and will make every effort to

accommodate persons with physical disabilities or special needs. If you require special accommodations due to a disability, please contact Paula Call at least seven days in advance of the meeting at the phone number listed above. Written statements may be filed with the Board either before or after the meeting. Individuals who wish to make oral statements pertaining to agenda items should contact Paula Call at the address or telephone number listed above. Requests must be received five days prior to the meeting and reasonable provision will be made to include the presentation in the agenda. The Deputy Designated Federal Officer is empowered to conduct the meeting in a fashion that will facilitate the orderly conduct of business. Individuals wishing to make public comments will be provided a maximum of five minutes to present their comments.

Minutes: Minutes will be available by writing or calling Paula Call's office at the address or phone number listed above. Minutes will also be available at the following Web site: *http://www.hanford.gov/?page=451.*

Issued at Washington, DC, on August 2, 2011.

LaTanya R. Butler,

Acting Deputy Committee Management Officer.

[FR Doc. 2011–20020 Filed 8–5–11; 8:45 am]

BILLING CODE 6450–01–P

DEPARTMENT OF ENERGY

Office of Energy Efficiency and Renewable Energy

[Case No. CW–020]

Notice of Petition for Waiver of Samsung Electronics America, Inc. From the Department of Energy Residential Clothes Washer Test Procedure, and Grant of Interim Waiver

AGENCY: Office of Energy Efficiency and Renewable Energy, Department of Energy.

ACTION: Notice of petition for waiver, notice of grant of interim waiver, and request for comments.

SUMMARY: This notice announces receipt of and publishes the Samsung Electronics America, Inc. (Samsung) petition for waiver and application for interim waiver (hereafter, ''petition'') from specified portions of the U.S. Department of Energy (DOE) test procedure for determining the energy consumption of clothes washers. Today's notice also grants an interim waiver of the clothes washer test procedure. Through this notice, DOE also solicits comments with respect to the Samsung petition.

DATES: DOE will accept comments, data, and information with respect to the Samsung petition until September 7, 2011.

ADDRESSES: You may submit comments, identified by case number CW–020, by any of the following methods:

- *Federal eRulemaking Portal: http://www.regulations.gov.* Follow the instructions for submitting comments.
- *E-mail: AS_Waiver_Requests@ee.doe.gov* Include ''Case No. CW–020'' in the subject line of the message.
- *Mail:* Ms. Brenda Edwards, U.S. Department of Energy, Building Technologies Program, Mailstop EE–2J/1000 Independence Avenue, SW., Washington, DC 20585–0121. *Telephone:* (202) 586–2945. Please submit one signed original paper copy.
- *Hand Delivery/Courier:* Ms. Brenda Edwards, U.S. Department of Energy, Building Technologies Program, 950 L'Enfant Plaza, SW., Suite 600, Washington, DC 20024. Please submit one signed original paper copy.

Instructions: All submissions received should include the agency name and case number for this proceeding. Submit electronic comments in WordPerfect, Microsoft Word, Portable Document Format (PDF), or text (American Standard Code for Information Interchange (ASCII)) file format and avoid the use of special characters or any form of encryption. Wherever possible, include the electronic signature of the author. DOE does not accept telefacsimiles (faxes).

Any person submitting written comments must also send a copy to the petitioner, pursuant to 10 CFR 430.27(d). The contact information for the petitioner is: Michael Moss, Director of Corporate Environmental Affairs, Samsung Electronics America, Inc., 18600 Broadwick Street, Rancho Dominguez, CA 90220.

According to 10 CFR 1004.11, any person submitting information that he or she believes to be confidential and exempt by law from public disclosure should submit two copies to DOE: One copy of the document including all the information believed to be confidential, and one copy of the document with the information believed to be confidential deleted. DOE will make its own determination about the confidential status of the information and treat it according to its determination.

Factors of interest to DOE when evaluating requests to treat submitted information as confidential include: (1) A description of the items; (2) whether and why such items are customarily treated as confidential within the industry; (3) whether the information is generally known by or available from other sources; (4) whether the information has previously been made available to others without obligation concerning its confidentiality; (5) an explanation of the competitive injury to the submitting person which would result from public disclosure; (6) a date upon which such information might lose its confidential nature due to the passage of time; and (7) why disclosure of the information would be contrary to the public interest.

Docket: For access to the docket to review the background documents relevant to this matter, you may visit the U.S. Department of Energy, 950 L'Enfant Plaza, SW., (Resource Room of the Building Technologies Program), Washington, DC 20024; (202) 586–2945, between 9 a.m. and 4 p.m., Monday through Friday, except Federal holidays. Available documents include the following items: (1) This notice; (2) public comments received; (3) the petition for waiver and application for interim waiver; and (4) prior DOE waivers and rulemakings regarding similar clothes washer products. Please call Ms. Brenda Edwards at the above telephone number for additional information regarding visiting the Resource Room.

FOR FURTHER INFORMATION CONTACT:

Dr. Michael G. Raymond, U.S. Department of Energy, Building Technologies Program, Mail Stop EE–2J, Forrestal Building, 1000 Independence Avenue, SW., Washington, DC 20585–0121. *Telephone:* (202) 586–9611. *E-mail: Michael.Raymond@ee.doe.gov.*

Ms. Elizabeth Kohl, U.S. Department of Energy, Office of the General Counsel, Mail Stop GC–71, Forrestal Building, 1000 Independence Avenue, SW., Washington, DC 20585–0103. *Telephone:* (202) 586–7796. *E-mail: Elizabeth.Kohl@hq.doe.gov.*

SUPPLEMENTARY INFORMATION:

I. Background and Authority

Title III, part B of the Energy Policy and Conservation Act of 1975 (EPCA), Public Law 94–163 (42 U.S.C. 6291–6309, as codified), established the Energy Conservation Program for Consumer Products Other Than Automobiles, a program covering most major household appliances, which includes the clothes washers that are the focus of this notice.[1] Part B includes definitions, test procedures, labeling provisions, energy conservation

[1] For editorial reasons, upon codification in the U.S. Code, part B was re-designated part A.

standards, and the authority to require information and reports from manufacturers. Further, part B authorizes the Secretary of Energy to prescribe test procedures that are reasonably designed to produce results which measure energy efficiency, energy use, or estimated operating costs, and that are not unduly burdensome to conduct. (42 U.S.C. 6293(b)(3)). The test procedure for automatic and semi-automatic clothes washers is contained in 10 CFR part 430, subpart B, appendix J1.

The regulations set forth in 10 CFR part 430.27 contain provisions that enable a person to seek a waiver from the test procedure requirements for covered consumer products. A waiver will be granted by the Assistant Secretary for Energy Efficiency and Renewable Energy (the Assistant Secretary) if it is determined that the basic model for which the petition for waiver was submitted contains one or more design characteristics that prevents testing of the basic model according to the prescribed test procedures, or if the prescribed test procedures may evaluate the basic model in a manner so unrepresentative of its true energy consumption characteristics as to provide materially inaccurate comparative data. 10 CFR 430.27(l). Petitioners must include in their petition any alternate test procedures known to the petitioner to evaluate the basic model in a manner representative of its energy consumption. 10 CFR 430.27(b)(1)(iii). The Assistant Secretary may grant the waiver subject to conditions, including adherence to alternate test procedures. 10 CFR 430.27(l). Waivers remain in effect pursuant to the provisions of 10 CFR 430.27(m).

The waiver process also allows the Assistant Secretary to grant an interim waiver from test procedure requirements to manufacturers that have petitioned DOE for a waiver of such prescribed test procedures. 10 CFR 430.27(a)(2). An interim waiver remains in effect for 180 days or until DOE issues its determination on the petition for waiver, whichever is sooner. DOE may extend an interim waiver for an additional 180 days. 10 CFR 430.27(h).

On December 23, 2010, DOE issued enforcement guidance on the application of waivers for large-capacity clothes washers and announced steps to improve the waiver process and refrain from certain enforcement actions. This guidance can be found on DOE's Web site at *http://www.gc.energy.gov/1661.htm.*

II. Application for Interim Waiver and Petition for Waiver

On July 20, 2010, Samsung filed a petition for waiver and application for interim waiver from the test procedure applicable to automatic and semi-automatic clothes washers set forth in 10 CFR part 430, subpart B, appendix J1. In particular, Samsung requested a waiver to test its clothes washers for certain specified basic models with basket volumes greater than 3.8 cubic feet on the basis of the aforementioned residential test procedures, using a revised Table 5.1 which extends the range of container volumes beyond 3.8 cubic feet. This petition was granted on March 10, 2011. 76 FR 13169. On February 11, 2011, Samsung filed an additional petition for waiver and application for interim waiver to expand the number of models subject to the alternative test procedure set forth in the company's July 2010 petition for waiver. The interim waiver was granted on April 19, 2011. 76 FR 21881. Samsung filed the instant petition for waiver for additional products on June 20, 2011.

Samsung's current petition seeks a waiver from the DOE test procedure because the mass of the test load used in the procedure, which is based on the basket volume of the test unit, is currently not defined for basket sizes greater than 3.8 cubic feet. In its petition, Samsung seeks a waiver for the specified basic models with capacities greater than 3.8 cubic feet.

Table 5.1 of Appendix J1 defines the test load sizes used in the test procedure as linear functions of the basket volume. Samsung requests that DOE grant a waiver for testing and rating based on a revised Table 5.1, the same table as set forth in the waiver granted to Samsung on March 10, 2011. 76 FR 13169. The table is identical to the Table 5.1 found in DOE's clothes washer test procedure Notice of Proposed Rulemaking (NOPR). 75 FR 57556 (September 21, 1010), which was altered slightly (to correct rounding errors) by the supplemental proposed rule issued on July 26, 2011 *http://www.eere.energy.gov/buildings/appliance_standards/residential/pdfs/rcw_tp_snopr.pdf.*

An interim waiver may be granted if it is determined that the applicant will experience economic hardship if the application for interim waiver is denied, if it appears likely that the petition for waiver will be granted, and/or the Assistant Secretary determines that it would be desirable for public policy reasons to grant immediate relief pending a determination of the petition for waiver. (10 CFR 430.27(g)).

DOE has determined that Samsung's application for interim waiver does not provide sufficient market, equipment price, shipments, and other manufacturer impact information to permit DOE to evaluate the economic hardship Samsung might experience absent a favorable determination on its application for interim waiver. Previously, however, DOE granted an interim test procedure waivers to Whirlpool (75 FR 69653 (November 15, 2010)), General Electric Company (GE) (75 FR 76968 (December 10, 2010)), LG (76 FR 11233 (March 1, 2011)), and Electrolux (76 FR 11440 (March 2, 2011)) for products with capacities larger than currently specified in the test procedure. As stated above, DOE granted a previous waiver to Samsung on March 10, 2011, and a further interim waiver on April 19, 2011. In these waivers, DOE established an alternate test procedure extending the linear relationship between the maximum test load size and clothes washer container volume up to 6.0 cubic feet, the same test procedure set forth in DOE's September 2010 test procedure NOPR and requested by Samsung in its June 2011 petition.

The current DOE test procedure specifies test load sizes only for machines with capacities up to 3.8 cubic feet. For the reasons set forth in DOE's September 2010 NOPR, DOE believes that extending the linear relationship between test load size and container capacity to larger capacities is valid. In addition, testing a basic model with a capacity larger than 3.8 cubic feet using the current procedure could evaluate the basic model in a manner so unrepresentative of its true energy consumption as to provide materially inaccurate comparative data. Based on these considerations, and the waivers granted to Whirlpool, GE, Electrolux and LG, as well as the previous waiver and interim waiver granted to Samsung for similar models, it appears likely that the petition for waiver will be granted. As a result, DOE grants an interim waiver to Samsung for the basic models of clothes washers with container volumes greater than 3.8 cubic feet specified in its petition for waiver, pursuant to 10 CFR 430.27(g). DOE also provides for the use of an alternative test procedure extending the linear relationship between test load size and container capacity, described below. Therefore, *it is ordered that:*

The application for interim waiver filed by Samsung is hereby granted for the specified Samsung clothes washer basic models, subject to the specifications and conditions below.

1. Samsung shall not be required to test or rate the specified clothes washer products on the basis of the test procedure under 10 CFR part 430 subpart B, appendix J1.

2. Samsung shall be required to test and rate the specified clothes washer products according to the alternate test procedure as set forth in section IV, ''Alternate Test Procedure.''

The interim waiver applies to the following basic model groups: WF501 ***

DOE makes decisions on waivers and interim waivers for only those models specifically set out in the petition, not future models that may or may not be manufactured by the petitioner. Samsung may submit a new or amended petition for waiver and request for grant of interim waiver, as appropriate, for additional models of clothes washers for which it seeks a waiver from the DOE test procedure. In addition, DOE notes that grant of an interim waiver or waiver does not release a petitioner from the certification requirements set forth at 10 CFR part 429.

III. Alternate Test Procedure

EPCA requires that manufacturers use DOE test procedures to make representations about the energy consumption and energy consumption costs of products covered by the statute. (42 U.S.C. 6293(c)) Consistent representations are important for manufacturers to use in making representations about the energy efficiency of their products and to demonstrate compliance with applicable DOE energy conservation standards. Pursuant to its regulations applicable to waivers and interim waivers from applicable test procedures at 10 CFR 430.27, DOE will consider setting an alternate test procedure for Samsung in a subsequent Decision and Order.

The alternate procedure approved today is intended to allow Samsung to make valid representations regarding its clothes washers with basket capacities larger than provided for in the current test procedure. This alternate test procedure is based on the expanded Table 5.1 of Appendix J1 that appears in DOE's clothes washer test procedure NOPR. 75 FR 57556 (September 21, 1010), altered slightly to correct rounding errors as specified in DOE's supplemental proposal issued on July 26, 2011.

During the period of the interim waiver granted in this notice, Samsung shall test its clothes washer basic models according to the provisions of 10 CFR part 430 subpart B, appendix J1, except that the expanded Table 5.1 below shall be substituted for Table 5.1 of appendix J1.

TABLE 5.1—TEST LOAD SIZES

Container volume		Minimum load		Maximum load		Average load	
cu. ft.	liter	lb	kg	lb	kg	lb	kg
≥ <	≥ <						
0–0.8	0–22.7	3.00	1.36	3.00	1.36	3.00	1.36
0.80–0.90	22.7–25.5	3.00	1.36	3.50	1.59	3.25	1.47
0.90–1.00	25.5–28.3	3.00	1.36	3.90	1.77	3.45	1.56
1.00–1.10	28.3–31.1	3.00	1.36	4.30	1.95	3.65	1.66
1.10–1.20	31.1–34.0	3.00	1.36	4.70	2.13	3.85	1.75
1.20–1.30	34.0–36.8	3.00	1.36	5.10	2.31	4.05	1.84
1.30–1.40	36.8–39.6	3.00	1.36	5.50	2.49	4.25	1.93
1.40–1.50	39.6–42.5	3.00	1.36	5.90	2.68	4.45	2.02
1.50–1.60	42.5–45.3	3.00	1.36	6.40	2.90	4.70	2.13
1.60–1.70	45.3–48.1	3.00	1.36	6.80	3.08	4.90	2.22
1.70–1.80	48.1–51.0	3.00	1.36	7.20	3.27	5.10	2.31
1.80–1.90	51.0–53.8	3.00	1.36	7.60	3.45	5.30	2.40
1.90–2.00	53.8–56.6	3.00	1.36	8.00	3.63	5.50	2.49
2.00–2.10	56.6–59.5	3.00	1.36	8.40	3.81	5.70	2.59
2.10–2.20	59.5–62.3	3.00	1.36	8.80	3.99	5.90	2.68
2.20–2.30	62.3–65.1	3.00	1.36	9.20	4.17	6.10	2.77
2.30–2.40	65.1–68.0	3.00	1.36	9.60	4.35	6.30	2.86
2.40–2.50	68.0–70.8	3.00	1.36	10.00	4.54	6.50	2.95
2.50–2.60	70.8–73.6	3.00	1.36	10.50	4.76	6.75	3.06
2.60–2.70	73.6–76.5	3.00	1.36	10.90	4.94	6.95	3.15
2.70–2.80	76.5–79.3	3.00	1.36	11.30	5.13	7.15	3.24
2.80–2.90	79.3–82.1	3.00	1.36	11.70	5.31	7.35	3.33
2.90–3.00	82.1–85.0	3.00	1.36	12.10	5.49	7.55	3.42
3.00–3.10	85.0–87.8	3.00	1.36	12.50	5.67	7.75	3.52
3.10–3.20	87.8–90.6	3.00	1.36	12.90	5.85	7.95	3.61
3.20–3.30	90.6–93.4	3.00	1.36	13.30	6.03	8.15	3.70
3.30–3.40	93.4–96.3	3.00	1.36	13.70	6.21	8.35	3.79
3.40–3.50	96.3–99.1	3.00	1.36	14.10	6.40	8.55	3.88
3.50–3.60	99.1–101.9	3.00	1.36	14.60	6.62	8.80	3.99
3.60–3.70	101.9–104.8	3.00	1.36	15.00	6.80	9.00	4.08
3.70–3.80	104.8–107.6	3.00	1.36	15.40	6.99	9.20	4.17
3.80–3.90	107.6–110.4	3.00	1.36	15.80	7.16	9.40	4.26
3.90–4.00	110.4–113.3	3.00	1.36	16.20	7.34	9.60	4.35
4.00–4.10	113.3–116.1	3.00	1.36	16.60	7.53	9.80	4.45
4.10–4.20	116.1–118.9	3.00	1.36	17.00	7.72	10.00	4.54
4.20–4.30	118.9–121.8	3.00	1.36	17.40	7.90	10.20	4.63
4.30–4.40	121.8–124.6	3.00	1.36	17.80	8.09	10.40	4.72
4.40–4.50	124.6–127.4	3.00	1.36	18.20	8.27	10.60	4.82
4.50–4.60	127.4–130.3	3.00	1.36	18.70	8.46	10.85	4.91
4.60–4.70	130.3–133.1	3.00	1.36	19.10	8.65	11.05	5.00
4.70–4.80	133.1–135.9	3.00	1.36	19.50	8.83	11.25	5.10

TABLE 5.1—TEST LOAD SIZES—Continued

Container volume		Minimum load		Maximum load		Average load	
cu. ft.	liter	lb	kg	lb	kg	lb	kg
≥ <	≥ <						
4.80–4.90	135.9–138.8	3.00	1.36	19.90	9.02	11.45	5.19
4.90–5.00	138.8–141.6	3.00	1.36	20.30	9.20	11.65	5.28
5.00–5.10	141.6–144.4	3.00	1.36	20.70	9.39	11.85	5.38
5.10–5.20	144.4–147.2	3.00	1.36	21.10	9.58	12.05	5.47
5.20–5.30	147.2–150.1	3.00	1.36	21.50	9.76	12.25	5.56
5.30–5.40	150.1–152.9	3.00	1.36	21.90	9.95	12.45	5.65
5.40–5.50	152.9–155.7	3.00	1.36	22.30	10.13	12.65	5.75
5.50–5.60	155.7–158.6	3.00	1.36	22.80	10.32	12.90	5.84
5.60–5.70	158.6–161.4	3.00	1.36	23.20	10.51	13.10	5.93
5.70–5.80	161.4–164.2	3.00	1.36	23.60	10.69	13.30	6.03
5.80–5.90	164.2–167.1	3.00	1.36	24.00	10.88	13.50	6.12
5.90–6.00	167.1–169.9	3.00	1.36	24.40	11.06	13.70	6.21

Notes: (1) All test load weights are bone dry weights.
(2) Allowable tolerance on the test load weights are ±0.10 lbs (0.05 kg).

IV. Summary and Request for Comments

Through today's notice, DOE announces receipt of Samsung's petition for waiver from certain parts of the test procedure that apply to clothes washers and grants an interim waiver to Samsung. DOE is publishing Samsung's petition for waiver in its entirety pursuant to 10 CFR 430.27(b)(1)(iv). The petition contains no confidential information. The petition includes a suggested alternate test procedure to measure the energy consumption of clothes washers with capacities larger than the 3.8 cubic feet specified in the current DOE test procedure. DOE is interested in receiving comments from interested parties on all aspects of the petition, including the suggested alternate test procedure and any other alternate test procedure.

Pursuant to 10 CFR 430.27(b)(1)(iv), any person submitting written comments to DOE must also send a copy to the petitioner, whose contact information is included in the **ADDRESSES** section above.

Issued in Washington, DC, on August 2, 2011.

Kathleen Hogan,

Deputy Assistant Secretary for Energy Efficiency, Office of Technology Development, Energy Efficiency and Renewable Energy.

June 20, 2011

Dr. Henry Kelly, Energy Efficiency and Renewable Energy Department of Energy, 1000 Independence Avenue, SW., Washington, DC 20585.

Re: Petition for Waiver and Application for Interim Waiver, Clothes Washers Capacity Greater than 3.8 Cubic Feet

Dear Assistant Secretary Kelly: Samsung Electronics America, Inc., a subsidiary of Samsung Electronics Co., Ltd. (Samsung), respectfully submits this Petition for Waiver and Application for Interim Waiver to the Department of Energy (DOE) for the testing of clothes washers with capacity greater than 3.8 cubic feet.

The 10 CFR Part 430.27(a)(1) allows a person to submit a petition to waive for a particular basic model any requirements of § 430.23 upon the grounds that the basic model contains one or more design characteristics which either prevent testing of the basic model according to the prescribed test procedures, or the prescribed test procedures may evaluate the basic model in a manner so unrepresentative of its true energy consumption characteristics as to provide materially inaccurate comparative data. Additionally, 10 CFR Part 430.27(b)(2) allows an applicant to request an Interim Waiver if economic hardship and/or competitive disadvantage is likely to result absent a favorable determination on the Application for Interim Waiver.

Reasoning

In order to meet current market demands, Samsung designed and will be marketing clothes washers with capacities greater than 3.8 cubic feet. Samsung expects that the majority of Samsung clothes washers will be greater than 3.8 cubic feet in capacity. The current test procedure, Appendix J1 to Subpart B of Part 430, Table 5.1, does not contain load sizes for capacities greater than 3.8 cubic feet, preventing Samsung from appropriately testing clothes washer models with capacity greater than 3.8 cubic feet. The Department recognized this test method deficiency in the Interim Waivers granted to Electrolux (76 FR 11440), LG (76 FR 11233), Whirlpool (75 FR 69653), General Electric (75 FR 76968), and Samsung (76 FR 21881).

The nature of this Application for Interim Waiver and Petition for Waiver does not differ from Samsung's original Application for Interim Waiver and Petition for Waiver as published in 75 FR 57937.

Conclusion

Samsung requests that DOE expeditiously grants the requested waiver for our Samsung clothes washer, model WF501***. This request is based upon the grounds that:

1. Current test methods for clothes washers do not allow testing of clothes washers with greater than 3.8 cubic feet capacity.
2. DOE has already granted Samsung an Interim Waiver in 75 FR 57937, per Table 5.1, for similar models.

Affected Persons

Primarily affected persons in the clothes washers category include Alliance Laundry Systems, LLC., BSH Home Appliances Corp., Electrolux Home Products, Fisher & Paykel Appliances, Inc., GE Appliances, Haier America Trading, L.L.C., LG Electronics Inc., Miele Appliances, Inc., and Whirlpool Corporation. Samsung will notify all these entities as required by the Department's rules and provide them with a version of this Petition. A copy was also provided to the Association of Home Appliance Manufacturers (AHAM).

Sincerely,

Michael Moss,

Director of Corporate Environmental Affairs.

[FR Doc. 2011–20015 Filed 8–5–11; 8:45 am]

BILLING CODE 6450–01–P

DEPARTMENT OF ENERGY

Office of Energy Efficiency and Renewable Energy

[Docket Number EERE–2011–BT–NOA–0049]

Commercial Building Asset Rating Program

AGENCY: Office of Energy Efficiency and Renewable Energy, Department of Energy.

ACTION: Notice of request for information (RFI).

SUMMARY: The U.S. Department of Energy (DOE or the Department) seeks to develop a voluntary National Asset Rating Program for Commercial Buildings (AR Program). The AR Program would establish an Asset

Rating system for commercial buildings based on a national standard and would evaluate the physical characteristics and as-built energy efficiency of these buildings. It would also identify potential energy efficiency improvements. The goal is to facilitate cost-effective investment in energy efficiency and reduce energy use in the commercial building sector. DOE seeks comments and information related to the development of the AR Program.

DATES: Written comments and information are requested on or before September 22, 2011.

ADDRESSES: Interested persons may submit comments, identified by docket number EERE–2011–BT–NOA–0049, by any of the following methods. Your response should be limited to 3 pages.

- *E-mail:* to *AssetRatingRFI–2011–NOA–0049@ee.doe.gov.* Include EERE–2011–BT–NOA–0049 in the subject line of the message.
- *Mail:* Ms. Brenda Edwards, U.S. Department of Energy, Building Technologies Program, Mailstop EE–2J, Revisions to Energy Efficiency Enforcement Regulations, EERE–2011–BT–NOA–0049, 1000 Independence Avenue, SW., Washington, DC 20585–0121. Phone: (202) 586–2945. Please submit one signed paper original.
- *Hand Delivery/Courier:* Ms. Brenda Edwards, U.S. Department of Energy, Building Technologies Program, 6th Floor, 950 L'Enfant Plaza, SW., Washington, DC 20024. Phone: (202) 586–2945. Please submit one signed paper original.

Instructions: All submissions received must include the agency name and docket number.

FOR FURTHER INFORMATION CONTACT: Direct requests for additional information may be sent to Mr. Cody Taylor, U.S. Department of Energy, Office of Energy Efficiency and Renewable Energy, Building Technologies Program, EE–2J, 1000 Independence Avenue, SW., Washington, DC 20585–0121. Telephone: 202–287–5842. E-mail: *Cody.Taylor@ee.doe.gov.*

SUPPLEMENTARY INFORMATION:

Background

The Department seeks to develop a voluntary AR Program. The AR Program would establish an Asset Rating system for commercial buildings based on a national standard and would evaluate the physical characteristics and as-built energy efficiency of these buildings. It would also identify potential energy efficiency improvements. The goal is to facilitate cost-effective investment in energy efficiency and reduce energy use in the commercial building sector. The Asset Rating is intended to complement other building rating and benchmarking tools in the market, DOE's Better Building Challenge (in which partners will commit to an energy savings pledge, assess the improvement opportunities across their portfolio, undertake a showcase building retrofit, and share their progress), and DOE's partnership with the Appraisal Foundation (which would enable investors, building owners and operators, and others to accurately assess the value of energy efficiency as part of the overall building appraisal).

The AR Program will inform building owners about the energy efficiency of their buildings, enabling comparison of the energy performance between buildings while controlling for differences in building operations and occupant behavior. The AR Program will also identify opportunities for cost-effective improvements in the building systems to increase energy efficiency.

Voluntary green building rating systems and ENERGY STAR Portfolio Manager have been used to varying degrees in the building industry to demonstrate building sustainability and energy performance. For existing buildings, measured energy performance based on utility bill history has been the dominant way to rate building energy performance. However, when a complete and continuous utility history is missing (for example, a vacant or partly empty building or a multi-tenanted building), it becomes difficult to evaluate building energy performance. Moreover, building stakeholders don't have a consistent basis for determining whether the energy use differences between two similar buildings are associated primarily with installed building systems or with operational choices. This information is important for building owners and investors when making decisions about efficiency improvement; it also informs prospective buyers and tenants who may want to compare among existing, new, and renovated buildings. Therefore, a national program would enable building stakeholders to directly compare as-built energy performance of building systems among similar buildings, regardless of occupant behavior and building operation.

Recent regional Asset Rating initiatives, such as California's AB 758 and the Massachusetts Commercial Asset Labeling Program, indicate a growing interest in a national Asset Rating system. The AR Program would facilitate the evaluation of energy-related building characteristics, which include building envelope, HVAC systems, lighting systems, and other major building service related equipment. The program would identify opportunities for energy efficiency improvements and estimate their likely savings. If communicated to potential buyers, lessees, and lenders, the Asset Rating would provide information necessary for the real estate market to value building energy efficiency measures.

The Department has aggressive goals for facilitating cost-effective energy savings in commercial buildings, most recently stated in the Better Building Initiative as a goal of 20% savings by 2020. Through the AR Program, the Department intends to establish a building Asset Rating system that can be broadly applied to both new and existing commercial buildings, and provide affordable and reliable information to building stakeholders. The Department intends the Asset Rating system to work with and complement the Portfolio Manager Operational Rating system, once the Asset Rating system is sufficiently demonstrated. Both of these systems could be expected to evolve over time, providing opportunities for increasing integration. An integrated Asset and Operational Rating together would provide a feedback loop and accountability for building owners and operators to ensure that their building is performing as intended and meeting its potential. An integrated system would also help building operators track the results of upgrades and identify potential operation and maintenance problems. The Asset Rating and Operational Rating would together comprise a national building rating system that effectively combines the as-built building efficiency with a gauge of operational success.

This Request for Information (RFI) calls on stakeholders to review the considered approaches and provide information to assist the Department in the development and implementation of this program. DOE intends to adopt or develop standardized approaches to evaluate the potential energy efficiency of commercial buildings, provide strategies to help building owners improve building energy efficiency, and establish a framework to convey the information to audiences at various levels. This RFI presents the following aspects of the AR Program:

- Market needs and opportunities.
- Guiding principles for the program.
- Options and approaches for key elements of the program.
- Pros and cons of various approaches.

- Initial proposed approach.
- Additional work that the Department is considering.

The RFI is structured as follows:

(1) Program Overview.
(2) Market Needs and Guiding Principles.
(3) Target Audience and Building Types.
(4) Basic Metrics.
(5) Rating Methods.
(6) Rating Scales.
(7) Recommendations for Improvements.
(8) National Commercial Building Energy Database.
(9) Quality Assurance.
(10) Potential for Additional Supported Options.
(11) Glossary of Key Terms.
(12) References.

The Department will consider all input it receives and plans to have an initial program design available by the end of September 2011. Based on that program design, the Department expects to pilot the program in partnership with interested parties and ongoing commercial energy efficiency programs, beginning in January 2012. The Department welcomes input on issues or logistical concerns that could extend this timeframe.

Program Overview

Limited information on the expected efficiency of a building based on as-built building systems and opportunities for cost-effective energy efficiency improvements are identified barriers to energy efficiency investments. The Department seeks to address these barriers by establishing a standardized approach for assessing the energy performance of commercial building assets and developing an easy-to-use tool to help building owners and stakeholders identify opportunities for improvement. Accordingly, the AR Program, as considered, has three components:

- A rating system to compute building energy efficiency and convey energy performance information, taking into account the building envelope, mechanical and electrical systems, and other major energy-using equipment. The Department intends to seek ways for the Asset Rating to be used in coordination with the Portfolio Manager Operational Rating to help building owners understand the opportunities for both capital and operational improvements in their buildings.
- A Web application, included as part of a free Asset Rating online software tool (AR Tool), to maintain building data entered by building owners or operators and to analyze building energy use, accounting for envelope, mechanical and electrical systems, and other major energy-using equipment. This tool would provide an energy rating and enable owners and operators to benchmark their building efficiency. It would be used to provide an Asset Rating Report.
- A second facet of the AR Tool, designed to help building owners and operators identify and implement strategies to improve efficiency of their buildings. In addition to receiving an Asset Rating, building owners and investors would be able to use the tool to analyze the potential for capital improvements to increase energy efficiency. The potential to improve and the potential energy savings would be included in the Asset Rating Report. DOE intends to support continuous improvement of energy efficiency by allowing buildings to be re-rated following a retrofit.

Market Needs and Guiding Principles

The AR Program is intended to enable building stakeholders to directly compare expected as-built energy performance among similar buildings and to analyze the potential for capital improvements to increase energy efficiency cost-effectively. It would give building stakeholders insight into a property's long-term energy cost, thus informing their valuation of that building. The AR Tool would provide an as-built rating, identify potential energy efficiency improvements, and provide the anticipated rating resulting from those improvements, illustrating for stakeholders the impact of potential capital improvements. Research (McCabe, 2011; McKinsey, 2009) shows a need to communicate energy and cost savings to owners, investors, financiers, and others to overcome market barriers and motivate capital investment in building energy efficiency.

The AR Program is intended to complement and coordinate with the existing Operational Rating system, ENERGY STAR Portfolio Manager. The Department is aware of other rating systems and standards that exist or are under development. These include but are not limited to ASHRAE Building EQ, LEED, Green Globes, ASTM Building Energy Performance Assessment, COMNET Commercial Buildings Energy Modeling Guidelines and Procedures. The Department will consider developments in these rating systems and standards as it creates a national Asset Rating system.

The primary goal of the AR Program is to spur commercial building energy improvements in construction and/or retrofits, so the principles that guide the program are based on market needs. These guiding principles, which drive the key program elements, are as follows.

- Information must be credible, reliable, and replicable.
- Information must be transparent and easy to understand.
- Collecting information and generating a rating must be affordable.
- Opportunities identified must be relevant and practical.
- Program must include effective quality assurance.
- Rating must recognize building energy performance across the full range of building efficiency.

The Department welcomes stakeholder comments on these guiding principles as the framework for the development of the program.

Target Audience and Building Types

The AR Program is aimed at a variety of building stakeholders—owners, operators, investors, tenants, appraisers, and designers. It may also inform lenders, local government, utilities, and green building rating systems. Considering the variety of audiences, the AR Program would provide an easy-to-understand rating that can convey building energy efficiency information to those in the general public who have no knowledge of building efficiency. The AR Tool would also provide technical information and identify opportunities for improvements to building professionals who would be implementing the recommendations. The Department seeks to develop an affordable system that provides a useful rating with minimal data collection. The Department is considering a two-tiered program. The first tier would yield a preliminary rating and identified opportunities for building improvements, as well as an estimate of the savings from the improvements. The preliminary rating of building efficiency would be based on minimum building information. The second tier would provide a certified rating after a qualified professional has validated the building information (see Quality Assurance section). The preliminary rating would give users rapid feedback on building efficiency and improvement opportunities; the second tier rating would be appropriate for the communicating the performance of the building to others.

The AR Tool is not intended to replace any engineering analysis needed for building retrofits, but to provide building owners and operators with a quick, easy, affordable tool based on a national standard. The AR Tool would be designed for users who have basic

knowledge of building systems, such as building engineers, facility managers, or contractors. Assistance from credentialed or third party AR certifiers would only be needed to receive a certified rating. The Department intends to work with interested parties, including state and local governments, utilities, and energy service companies, to develop ways to use the AR Program to promote market transformation.

Because of the different levels of complexity due to building type and size, the AR Tool development will first focus on building types that generally have simpler building systems and have adequate information sources to establish a reliable rating system. These building types include office, school, retail, warehouse, and assembly. In time, other building types will be added, including data center, laboratory, refrigerated warehouse, health care, lodging, food sale, food service, and mixed use buildings.

Basic Metrics

A building's expected energy performance can be described in a variety of ways, including (1) Energy use; (2) energy cost; or (3) greenhouse gas emissions associated with the building's energy use. The Department is considering several options for representing building energy performance, as described below.

Energy Metric—Source or Site Energy Use

An energy metric is the most straightforward way to represent building energy performance. Three building energy metrics to be considered are site energy use, net onsite energy use, and source energy use. Site energy use can be directly calculated using the sum of electricity natural gas and any other fuels used. If renewable energy is generated onsite, the expected energy generation and net energy use can also be calculated. Using a source energy metric requires the use of a conversion factor to convert site electricity use to a source equivalent, which would allow consumers to more equitably consider all fuel types and the environmental consequences of electricity generation. Although site energy is most closely related to the values that customers see on their energy bills for each fuel type, using source energy as a metric more closely reflect the cost tradeoffs among different fuels and the long-term cost implications of different energy choices. Regional source-to-site conversion factors vary and the offsite generation mix is generally not controlled by the consumer. Although regional source conversion factors more accurately represent actual energy use, a national conversion factor allows comparison across the nation and ensures that a building does not receive a relatively low rating just because of its location.

The Department plans to use source energy with a national source-to-site conversion factor as the basic metric because source energy can most accurately represent total energy use of a building and the related environmental impacts. Also, using source energy makes the Asset Rating system compatible with ENERGY STAR Portfolio Manager, which adopted source energy as its basic metric. Source energy use is familiar to building owners and operators who have been using Portfolio Manager or other building rating systems relying on Portfolio Manager. The Department welcomes stakeholder comments on the energy metric for Asset Rating.

Cost Metric

Consumers are generally more familiar with cost metrics. However, energy costs for commercial buildings vary considerably in different parts of the country and change over time, including over the course of the day. Without much more specific information about a building's operations and its time-dependent per-unit energy prices, energy cost does not provide a durable, comparable metric upon which to base a rating. A cost metric alone cannot directly be used to judge building energy performance or guide building owners' investment decisions.

For the above reasons, the Department does not intend to choose cost information as the primary metric for the program. However, the Department is exploring how to use cost information to assess opportunities to improve building energy efficiency and describe the likely cost savings associated with these improvements. Though the actual Asset Rating would not be affected by energy or equipment costs, both of these costs may be used to perform a life cycle cost analysis, the results of which could be used to propose opportunities for cost-effective energy savings.

Greenhouse Gas Metric

Energy use significantly contributes to greenhouse gas emissions, and the AR Program would provide an opportunity to educate consumers and help them reduce their emissions. Using a greenhouse gas metric as the primary program metric would most closely link the Asset Rating to associated environmental impact. However, the primary focus of the AR program is cost-effective energy efficiency improvements, which is not perfectly aligned with a greenhouse gas metric. As noted by the Northeast Energy Efficiency Partnerships using a greenhouse gas metric can ''confuse the existence of non-carbon power sources—including large hydropower and nuclear power—with actual energy savings.'' (Dunsky, *et al*, 2009).

Therefore, the Department does not intend to choose greenhouse gas information as the primary metric for the program. However, the Department is exploring ways to support greenhouse gas information as an optional element of the program based on a partner's interest.

Initial Approach: The Department intends to use source energy use intensity as the primary performance metric. Onsite renewable energy generation may be recognized, but separately from the rating calculation. The Department welcomes stakeholder comments on the above metrics.

Rating Methods

Various rating methods are possible. All methods share some characteristics, such as:

- A data collection phase in which the user defines key building characteristics.
- An energy use prediction phase.
- A comparison/rating phase.

For the data collection phase, the user would enter the characteristics of the building being examined; these values would then be used in conjunction with a set of default building characteristics to develop the required inputs for the energy use prediction phase. The user inputs would fall into six broad categories:

- General characteristics (use type, location, age, available fuels, etc.).
- Design characteristics (geometry, orientation, window to wall ratio, structure type, etc.).
- Envelope elements (window types, wall constructions, roof constructions, etc.).
- HVAC system characteristics (technology used, fuel type, efficiency, etc.).
- Lighting system characteristics (lamp type, numbers of lights, sensors and controls, etc.).
- Service hot water (fuel type, efficiency, storage capacity, etc.).

In addition to the above user inputs, a set of internal values would be used in the analysis. The internal values are based purely on a building's use type and would be held constant across all models of buildings with similar functions. This set of inputs primarily

consists of the occupancy and operation parameters, such as:

- Occupancy schedule.
- HVAC system operation.
- Hot water use.

Both the user-entered and the internally defined, fixed building characteristics would be combined to develop the inputs for a building energy use prediction tool.

Several potential methods for predicting a building's energy use are being considered, including:

- Pre-simulating large numbers of buildings and using interpolation to customize the results to an individual case.
- Detailed energy simulation.
- Simplified energy simulation.

Each of the above methods has unique strengths and potential issues. Selecting the correct method will require tradeoffs between flexibility, accuracy, and the end-user's time investment in data collection.

In the case of a pre-simulation methodology, the benefits are relative ease of use and a level of complexity that can be highly tailored to the needs of the asset rating methodology. Once deployed, this approach is less flexible than approaches that use real time modeling because each possible combination of building attributes must be predicted and modeled beforehand. For each additional building input characteristic that the end-user can control, the number of required models is greatly increased. Depending on the level of effort required per model, it could be challenging to implement this approach with enough granularity to provide useful results.

There is a wide range of building energy modeling tools, each with different strengths and weaknesses, including differing levels of input and output detail, required development time, and expected user expertise. Most one-off energy models are highly detailed to allow the inclusion of all of a building's unique characteristics. Using a detailed modeling approach to formulate an asset rating would most likely provide the greatest flexibility and accuracy. Such a tool would, however, require a substantial amount of development time and would still likely require a professional building energy modeler to use properly—though with greater development time some of the expertise requirements could be overcome.

Simplified analysis models use many simplifications and assumptions that allow an inexperienced user to quickly develop robust energy models. In general, these modeling tools allow fewer input combinations than a detailed model and will reduce opportunities for error. The primary drawback of a purpose-built simplified simulation model would be user concern about the accuracy of the results.

Whichever rating calculation method is selected, the required outputs would be the same. The Department intends to select one or more metrics (see Basic Metrics section) to be the primary output of modeling. The metric(s) would allow for both the placement of the subject building onto a rating scale (as defined in Rating Scales section) and the comparison of the building with similar buildings.

The Department welcomes stakeholder comments on the rating calculation methods.

Rating Scales

There are several ways to deliver building energy performance information to consumers. Various types of scales have been used in the existing building rating systems. The following is a discussion of the different methods and their applicability to the Asset Rating system.

Numeric Scale Reflecting Physical Units

This scale method represents a certain type of physical unit. For example, the EnergyGuide label found on household appliances uses a physical scale (supplemented with cost information), such as kilowatt hours per year in the case of refrigerators supplemented with the expected annual cost of the particular refrigerator. The miles-per-gallon (MPG) rating displayed on new vehicles is another example of using non-converted physical units to convey information. The physical units can transparently deliver the technical information to the consumers; however, consumers may be unable to judge if they are unfamiliar with the units. Unlike cost or MPG rating for vehicles, energy units such as kBtu/ft^2 do not convey enough information to most audiences without engineering or energy knowledge. The Asset Rating aims to promote market transformation and educate consumers, and an absolute energy scale could be challenging for the general public to interpret. In addition, an unprocessed numeric scale does not offer a comparison between a building and its peers, which is a desirable comparison because consumers are often motivated by how they compare to others.

Numeric Scale Converting Physical Units into Score System

This rating method converts a metric from physical units into a score or index, which may be more easily understood by consumers. ENERGY STAR Portfolio Manager, for example, converts energy use in commercial buildings into a score on a 100-point scale. The Home Energy Rating System (HERS) scale, used primarily for new homes, also converts energy units into an index, where 100 represents a home built to 2006 International Energy Conservation Code standards.

The scores can be calculated using either a percentile rank method or an interval method. ENERGY STAR Portfolio Manager uses a 100 point percentile rank scale based on supporting databases, which provide statistical representation of a given building type. This approach is not appropriate for the Asset Rating because there is no reliable database recording the efficiency of existing buildings. In addition, the AR Program is intended to provide information on expected energy use (and energy costs) and effective energy efficiency strategies across all buildings. A percentile rank scale does not accomplish this objective throughout the entire range of the scale. In particular, the high efficiency—on an absolute basis—of the most efficient buildings is not fully reflected.

An alternative is a 100-point interval scale. Use of a 100 point scale would have some consistency with ENERGY STAR Portfolio Manager. An advantage of a 100-point *interval* scale is that the rating system can recognize building efficiency and building efficiency improvements in a similar manner at all efficiency levels. DOE is also considering a simpler numeric scale, similar to the 10-point scale used by the Home Energy Score (*http://www1.eere.energy.gov/buildings/homeenergyscore/*). A 10-point scale does not imply the same degree of precision as a 100-point scale. In this sense, a 10-point system, although a numeric score, functions as a bin system, which is discussed in the next section.

Categorical Scale Assigning Physical Units Into Bins

The physical units can also be converted into a category system, which could be presented in letters, numbers, stars, or other symbols. It has been shown that categorical scales, compared with continuous numeric scales, lead to better comprehension because ''categorical ratings are easy to use and quick to decipher'' (Thorne and Egan, 2002a). Viewers can more easily gauge a building's performance relative to other buildings or a reference point. Categorical ratings using letter grades have been used in multiple building

rating systems such as ASHRAE Building Energy Quotient and the UK Display Energy Certificate. A rating system based on letter grading is also a common format for several countries in the European Union, although the meaning of each grade could be very different across regions. A series of studies on the EnergyGuide label has demonstrated that consumers favor a stars-based format because it is familiar and intuitive, while check marks or letter grades are more confusing (Thorne and Egan, 2002b).

While stars and grades simplify things for consumers, a binned system also has drawbacks. Using a binned system can appear qualitative. Including a reference value can help alleviate this weakness. The number of bins is also important. Too many bins may complicate the system, while too few bins can make it hard for a building to improve from one bin to the next, and not be appropriately reflective of the investments made and the savings being achieved.

With a well-defined bin range, a categorical system would allow easy distinction between the categories and allow quick comparison between buildings as well as changes within a building category as improvements are made. Star ratings are visually appealing, motivating, and quickly draw attention. Thorne and Egan's (2002b) research also suggested ''consumers found the stars rating system complementary with the ENERGY STAR label and certification.'' The shortcoming of a stars-based format is that the number of stars needs to be limited. More than six stars may make it difficult for viewers to recognize the value quickly. In this case, a numeric format (10-point scale) becomes advantageous.

Initial Approach: For the Asset Rating system, the Department is considering using a scale using physical units, possibly accompanied by a numeric interval scale. A 100-point interval scale would complement Portfolio Manager's 100-point range. The Department welcomes stakeholder comments on rating scales.

The Department is considering including the following basic building information on the Asset Rating Report to ensure that similar buildings are used for comparison:

- Building name.
- Year built.
- Climate zone.
- Building type.
- Year rating is issued.
- Report serial number (for tracking purposes).

Analysis results would be clearly displayed and formatted for easy reading and understanding, and would include:

- Calculated energy use.
- Building Asset Rating based on calculated energy use.
- Asset Rating that can be achieved with energy efficiency upgrades.
- Energy and cost savings associated with the higher achieved rating.

Additional information may also be provided in the future, such as:

- A reference point to help users understand how their building score compares to a chosen energy code.
- Indication of whether the building has systems to provide a certain amount of energy from onsite renewables.
- Greenhouse gas emissions.

The Department is also considering working with interested partners to include local benchmark information on the Asset Rating Report for comparison. For example, a state might wish to include information pertaining to average asset ratings for a particular building type within the state. The Department welcomes stakeholder comments on the information included on the Asset Rating Report.

Identified Opportunities for Energy Efficiency Improvements

Based on the building information, the AR Tool would identify potential opportunities for energy efficiency upgrades that could cost-effectively improve a building's asset rating.

The AR Tool would identify improvement opportunities in areas such as heating, cooling, and ventilation equipment; envelope; glazing; service hot water; lighting; and electric motors.

The AR Tool is not intended to replace energy audits or any engineering analysis required for building retrofits. It is intended to provide an affordable way for building owners and operators to determine which building systems are good candidates for an efficiency upgrade. The tool may be a gateway for building owners who have limited internal resources to engage with service providers who can provide building rating with the AR tool and offer products and services that can improve energy performance.

Initial Approach: The Department is considering computing cost savings estimates for energy efficiency measures based on regional energy costs, acknowledging that local conditions will vary. The AR Tool will not display return on investment given that equipment and labor costs are likely to vary considerably. The Department welcomes public comments on the best way to assess opportunities for energy efficiency improvement.

National Building Asset Rating Database

The Department intends to establish a national building Asset Rating database to track Asset Ratings and ensure the legitimacy of ratings. The Department is aware of potential privacy issues related to maintaining this information and the desire for some jurisdictions to require disclosure of energy Asset Ratings. Public comments are welcome regarding structure and use of the Asset Rating database.

Quality Assurance

The ability to generate accurate and consistent information is important to maintain user confidence. The Department intends to include quality assurance requirements for the following:

Asset Rating Tool

The user would receive a warning when automated checks suggest that data entered may be incorrect or incomplete.

Professional Requirements for Asset Rating Application

Building owners would be able to use the free Web application to enter the required energy and building information, generate a preliminary building Asset Rating, and receive recommendations. The Department is considering requiring a professional with specific approved qualifications to validate building information inputs for a building to be eligible for a certified Asset Rating. The Department intends to develop a guideline to specify the credentials that a professional must hold in order to generate a certified rating.

Third-Party Verification

Third-party verification can be an effective way to ensure program quality. Some jurisdictions may want to require third-party verification of the accuracy of data used to acquire a certified rating. The third party may require building owners to submit supplemental building information and/or perform an onsite audit. The Department is evaluating options for implementing this type of requirement, including establishing verification standards and approving qualified third-party organizations. Verification data and reports may be integrated into the Asset Rating database, software tool, and reports.

Technical Support

Full documentation of the rating methodology would be available online for public review. A user manual, guidelines and eligibility requirements

for the qualified professionals, data checklists, and FAQs would be available to owners and operators to applying for certified Asset Ratings. In addition, help for users would be available before, during, and after the application process. A user feedback survey may be implemented to help gauge program satisfaction and to gather suggestions for improvement.

Initial Approach: The Department is considering ensuring the quality of the Asset Rating by providing a free Web-based application to guide standard data collection, calculate energy use, and generate ratings; requiring professionals to review final submissions; enabling third-party verification; and providing necessary technical support. Public comments on the quality assurance methods are welcome.

Potential for Additional Supported Options

While a national performance metric and rating system would help ensure consistency across the country, the Department recognizes that state and local governments and other program implementers may be interested in providing information that goes beyond the national metric and rating.

To that end, the Department intends to partner with state and local governments to support the sharing of additional information as part of this effort. For example, while greenhouse gas information is unlikely to be a standard metric for the AR Program, the Department could provide conversion factors to states and other partners that are interested in providing such information.

This document describes the major design questions that the Department is considering in developing a voluntary AR Program. DOE is seeking comments on the issues discussed above. However, stakeholders are welcome to raise other relevant issues that the Department may have overlooked in this design process.

Glossary of Key Terms

Asset Rating—An assessment of building energy performance that is based solely on a building's physical assets, excluding the impacts of building operation characteristics.

Asset Rating Report—A short form document showing only key outcomes for a building that has undergone the Asset Rating process.

Baseline—The amount of energy that is consumed annually before implementation of energy efficiency measures based on historical metered data, engineering calculations, submetering of buildings or energy-consuming systems, building load simulation models, statistical regression analysis, or some combination of these methods.

Benchmark—The building profile used as a reference point for comparing energy use and other performance characteristics.

ENERGY STAR Portfolio Manager—A Web-based, portfolio-wide energy and water tracking system that tracks many metrics of energy use- including total site energy, source energy, weather normalized energy use index, greenhouse gas emissions, indoor and outdoor water usage, and (for some building types) the ENERGY STAR score.

ENERGY STAR energy performance scale—A 1–100 percentile rank score that indicates how a building performs relative to similar buildings nationwide. The scores are adjusted using standardized methods to account for differences in building attributes, operating characteristics, and weather variables. Buildings performing better than 75% of similar buildings can be certified to ENERGY STAR.

Energy Efficiency Measure—A design, operation, or technology change for the purpose of reducing energy consumption.[1]

Net Onsite Energy Use—The sum of all energies that are consumed in a building minus any energy that is generated on site.

Operational Rating—An assessment of building performance that is developed to reflect the energy performance of a building, accounting for its physical assets and its specific operational characteristics.

Site Energy Use—The amount of energy consumed at a building location or other end-use site, as reflected in the utility bills. Includes electricity generated by onsite renewable energy systems.

Source Energy Use—The total energy used at a site, including upstream losses in distribution, storage, and dispensing of primary fuels, or power generation, transmission, and distribution of electricity.

Percentile Rank Scale—A percentile scale that is defined solely in relation to a sample population; the scale itself contains no information in absence of information regarding the specific sample population. The primary purpose of a percentile rank scale is comparison between peer buildings.

Interval Scale—A scale for which each location along its span relates directly to some metric or measurement.

[1] Source: ConstructionDictionary.com, *http://www.construction-dictionary.com/definition/energy-efficiency-measure-EEM.html.*

References

ASHRAE. 2009. *Building Energy Quotient: Promoting the Value of Energy Efficiency in the Real Estate Market.* Atlanta, GA. American Society of Heating, Refrigerating and Air-Conditioning Engineers. *http://www.sustain-rhythm.com/HPB%20Exchange/files/Energy_ABELFinal.pdf.*

Dunsky, P., Lindberg, J., Piyale-Sheard, E., and Raesy, R. 2009 *Evaluating Building Energy Efficiency Through Disclosure and Upgrade Policies, A Roadmap for the Northeast U.S.* Lexington, KY. Northeast Energy Efficiency Partnerships, Dunsky Energy Consulting.

Massachusetts Department of Energy Resources. 2010. *An MPG Rating for Commercial Buildings: Establishing a Building Energy Asset Labeling Program in Massachusetts.* Boston, MA. *http://www.mass.gov/Eoeea/docs/doer/Energy_Efficiency/Asset_Rating_White_Paper.pdf.*

McCabe, M.J. 2011 *High-Performance Buildings—Value, Messaging, Financial and Policy Mechanisms.* Richland, WA. Pacific Northwest National Laboratory.

McKinsey & Company. 2009. *Unlocking Energy Efficiency in the U.S. Economy.* New York, NY. McKinsey & Company, Inc. *http://www.mckinsey.com/en/Client_Service/Electric_Power_and_Natural_Gas/Latest_thinking/Unlocking_energy_efficiency_in_the_US_economy.aspx.*

Thorne, J., and Egan, C. 2002a. *An Evaluation of the Federal Trade Commission's EnergyGuide Appliance Label: Final Report and Recommendations.* Washington, DC: American Council for an Energy-Efficient Economy.

Thorne, J., and Egan, C. 2002b. The EnergyGuide Label: Evaluation and Recommendations for an Improved Design. *Proceedings of the ACEEE Summer Study on Buildings, Panel 8: 357.*

Disclaimer and Important Notes

This is an RFI issued solely for information and program planning purposes; this RFI does not constitute a formal solicitation for proposals or abstracts. Your response to this notice will be treated as information only. DOE will not provide reimbursement for costs incurred in responding to this RFI. Respondents are advised that DOE is under no obligation to acknowledge receipt of the information received or provide feedback to respondents with respect to any information submitted under this RFI. Responses to this RFI do not bind DOE to any further actions related to this topic.

Issued in Washington, DC, on August 2, 2011.

Kathleen B. Hogan,

Deputy Assistant Secretary for Energy Efficiency, Office of Technology Development, Energy Efficiency and Renewable Energy.

[FR Doc. 2011–20014 Filed 8–5–11; 8:45 am]

BILLING CODE 6450–01–P

DEPARTMENT OF ENERGY

Southwestern Power Administration

Integrated System Power Rates

AGENCY: Southwestern Power Administration, DOE.

ACTION: Notice of public review and comment.

SUMMARY: The Administrator, Southwestern Power Administration (Southwestern), has prepared Current and Revised 2011 Power Repayment Studies which show the need for an increase in annual revenues to meet cost recovery criteria. Such increased revenues are needed primarily to cover increased costs associated with compliance requirements of the North American Electric Reliability Corporation and to cover increased investments and replacements in hydroelectric generating facilities. The Administrator has developed proposed Integrated System rates, which are supported by a rate design study, to recover the required revenues. The June 2011 Revised Study indicates that the proposed rates would increase annual system revenues approximately 5.4 percent from $177,191,800 to $186,761,225 effective November 1, 2011 through September 30, 2015.

DATES: The consultation and comment period will begin on the date of publication of this **Federal Register** notice and will end on October 7, 2011. If requested, a combined Public Information and Comment Forum (Forum) will be held in Tulsa, Oklahoma at 9 a.m. on August 16, 2011.

ADDRESSES: The Forum will be held in Southwestern's offices, Room 1460, Williams Center Tower I, One West Third Street, Tulsa, Oklahoma 74103.

FOR FURTHER INFORMATION CONTACT: Mr. James K. McDonald, Assistant Administrator, Office of Corporate Operations, Southwestern Power Administration, U.S. Department of Energy, One West Third Street, Tulsa, Oklahoma 74103, (918) 595–6690, *jim.mcdonald@swpa.gov.*

SUPPLEMENTARY INFORMATION: Originally established by Secretarial Order No. 1865 dated August 31, 1943, Southwestern is an agency within the U.S. Department of Energy created by the Department of Energy Organization Act, Public Law 95–91, dated August 4, 1977. Guidelines for preparation of power repayment studies are included in DOE Order No. RA 6120.2 entitled Power Marketing Administration Financial Reporting. Procedures for Public Participation in Power and Transmission Rate Adjustments of the Power Marketing Administrations are found at title 10, part 903, subpart A of the Code of Federal Regulations (10 CFR 903). Procedures for the confirmation and approval of rates for the Federal Power Marketing Administrations are found at title 18, part 300, subpart L of the Code of Federal Regulations (18 CFR 300).

Southwestern markets power from 24 multi-purpose reservoir projects with hydroelectric power facilities constructed and operated by the U.S. Army Corps of Engineers (Corps). These projects are located in the states of Arkansas, Missouri, Oklahoma, and Texas. Southwestern's marketing area includes these States plus Kansas and Louisiana. The costs associated with the hydropower facilities of 22 of the 24 projects are repaid via revenues received under the Integrated System rates, as are those of Southwestern's transmission facilities, which consist of 1,380 miles of high-voltage transmission lines, 25 substations, and 46 microwave and VHF radio sites. Costs associated with the Sam Rayburn and Robert D. Willis Dams, two Corps projects that are isolated hydraulically, electrically, and financially from the Integrated System, are repaid under separate rate schedules and are not addressed in this notice.

Following Department of Energy guidelines, the Administrator, Southwestern, prepared a Current Power Repayment Study using existing system rates. The Study indicates that Southwestern's legal requirement to repay the investment in power generating and transmission facilities for power and energy marketed by Southwestern will not be met without an increase in revenues. The need for increased revenues is primarily due to increased costs associated with compliance requirements of the North American Electric Reliability Corporation and to cover increased investments and replacements in hydroelectric generating facilities for the Corps. The Revised Power Repayment Study shows that additional annual revenues of $9,569,425 (a 5.4 percent increase) are needed to satisfy repayment criteria.

A Rate Design Study has also been completed which allocates the revenue requirement to the various system rate schedules for recovery, and provides for transmission service rates in general conformance with FERC Order No. 888.[1] The proposed new rates would increase estimated annual revenues from $177,191,800 to $186,761,225 and would satisfy the present financial criteria for repayment of the project and transmission system investments within the required number of years. As indicated in the Integrated System Rate Design Study, this revenue would be developed primarily through increases in the charges for power sales capacity and energy and transmission services, including some of the ancillary services for deliveries of both Federal and non-Federal power and associated energy from the transmission system of Southwestern.

A second component of the Integrated System rates for power and energy, the Purchased Power Adder (PPA), produces revenues which are segregated to cover the cost of power purchased to meet contractual obligations. The PPA is established to reflect what is expected to be needed by Southwestern to meet purchased power needs on an average annual basis. The PPA rate will decrease slightly to reflect the incorporation of the White River Minimum Flows legislation as applied to our projected power needs. The Administrator's authority to adjust the PPA at his discretion with the Purchased Power Adder Adjustment (PPAA) will remain in force.[2] The PPAA is limited to two adjustments per year not to exceed a total of ± 6.2 mills per kilowatthour per year. The PPA will decrease to $0.0062 per kilowatthour and the PPAA will remain at zero effective November 1, 2011.

A revision to the component for Regulation Purchased Adder service has been proposed to the existing rate schedules to include a refinement of current procedures for calculating the prorated share of the costs for supplying regulation service to those customers inside the Balancing Authority Area. This revision to the Regulation Purchased Adder is being proposed so that all users of regulation service within the Balancing Authority Area are appropriately assessed for their consumption of the service that is purchased to supplement the Federal resource used to support the Balancing Authority's requirement to regulate for loads. A copy of the proposed Regulation Purchased Adder language

[1] *Promoting Wholesale Competition Through Open Access Non-discriminatory Transmission Services by Public Utilities; Recovery of Stranded Costs by Public Utilities and Transmitting Utilities,* Order No. 888, 61 FR 21,540 (5/10/1996), FERC Stats. & Regs. ¶ 31,036 (1996), *order on reh'g,* Order No. 888–A, 62 FR 12,274 (3/14/1997), FERC Stats. & Regs. ¶ 31,048 (1997), *order on reh'g,* Order No. 888–B, 81 FERC ¶ 61,248 (1997), *order on reh'g,* Order No. 888–C, 82 FERC ¶ 61,046 (1998), *aff'd in relevant part sub nom. Transmission Access Policy Study Group* v. *FERC,* 225 F.3d 667 (D.C. Cir. 2000), *aff'd sub nom. New York* v. *FERC,* 535 U.S. 1 (2002).

[2] See 133 FERC ¶ 62,005 (2010).

contained within the proposed Rate Schedules can be requested from Mr. James K. McDonald at the address listed above.

Below is a general comparison of the existing and proposed system rates:

GENERATION RATES	Existing Rates	Proposed Rates
	Rate Schedule P–09 (System Peaking)	Rate Schedule P–11 (System Peaking)
Capacity Grid or 138–161kV	$4.06/kW/Mo	$4.29/kW/Mo
Required Ancillary Services (generation in BA)	$0.11/kW/Mo	$0.13/kW/Mo
Regulation & Freq. Response (generation in BA)	$0.09/kW/Mo	$0.09/kW/Mo
Regulation Purchased Adder (load within SWPA BA)	prorata share of total energy cost	prorata share of total energy cost (includes refinement to procedure)
Reserve Ancillary Services	$0.0184/kW/Mo	$0.0224/kW/Mo
Purchased Power Adder	$0.0067/kWh	$0.0062/kWh
Administrator's Discretionary Adder Adjustment Limit	±$0.0067/kWh annually	±$0.0062/kWh annually
Transformation Service 69 kV(applied to usage, not reservation)	$0.42/kW/Mo	$0.42/kW/Mo
Energy Peaking Energy	$0.0086/kWh	$0.0091/kWh
Supplemental Peaking Energy	$0.0086/kWh	$0.0091/kWh
TRANSMISSION RATES	Rate Schedule NFTS–09 (Transmission)	Rate Schedule NFTS–11 (Transmission)
Capacity (Firm Reservation with energy) Grid or 138–161 kV	$1.18/kW/Mo $0.295/kW/Week $0.0536/kW/Day	$1.28/kW/Mo $0.320/kW/Week $0.0582/kW/Day
Required Ancillary Services (generation in BA)	$0.11/kW/Mo, or $0.028/kW/Week, or $0.005/kW/Day	$0.13/kW/Mo, or $0.033/kW/Week, or $0.006/kW/Day
Reserve Ancillary Services (generation in BA)	$0.0184/kW/Mo, or $0.0046/kW/Week, or $0.00084/kW/Day	$0.0224/kW/Mo, or $0.0056/kW/Week, or $0.00102/kW/Day,
Regulation & Freq Response (deliveries within BA)	$0.09/kW/Mo, or $0.023/kW/Week, or $0.0041/kW/Day	$0.09/kW/Mo, or $0.023/kW/Week, or $0.0041/kW/Day
Transformation Service 69 kV and below (applied on usage, not reservation) Weekly and daily rates not applied	$0.42/kW/Mo	$0.42/kW/Mo
Capacity (Non-firm with energy)	80% of firm monthly charge divided by 4 for weekly rate, divided by 22 for daily rate, and divided by 352 for hourly rate	80% of firm monthly charge divided by 4 for weekly rate, divided by 22 for daily rate, and divided by 352 for hourly rate
Network Service	$1.18/kW/Mo	$1.28/kW/Mo
Required Ancillary Services	$0.11/kW/Mo	$0.13/kW/Mo
Reserve Ancillary Services (generation in BA)	$0.00184/kW/Mo	$0.00224/kW/Mo
Regulation & Freq Response (deliveries within BA)	$0.09/kW/Mo	$0.09/kW/Mo
EXCESS ENERGY RATES	Rate Schedule EE–09 (Excess Energy)	Rate Schedule EE–11 (Excess Energy)
Energy	$0.0086/kWh	$0.0091/kWh

Opportunity is presented for Southwestern's customers and other interested parties to receive copies of the Integrated System Studies. If you desire a copy of the Integrated System Power Repayment Studies and Rate Design Study Data Package, submit your request to Mr. James K. McDonald, Assistant Administrator, Office of Corporate Operations, Southwestern Power Administration, One West Third, Tulsa, OK 74103; phone: (918) 595–6690; e-mail: *jim.mcdonald@swpa.gov.*

A Public Information and Comment Forum is tentatively scheduled for August 30, 2011, to explain to the public the proposed rates and supporting studies and to allow for comment. A chairman, who will be responsible for orderly procedure, will conduct the Forum if a Forum is requested. Questions concerning the rates, studies, and information presented at the Forum will be answered, to the extent possible, at the Forum. Questions not answered at the Forum will be answered in writing. Questions involving voluminous data contained in Southwestern's records may best be answered by consultation and review of pertinent records at Southwestern's offices.

Persons desiring to attend the Forum should indicate in writing (address cited above) by letter, email or facsimile transmission (918–595–6656) by August 22, 2011, their intent to appear at such Forum. If no one so indicates his or her intent to attend, no such Forum will be held. Persons interested in speaking at the Forum should submit a request to

Mr. James K. McDonald, Assistant Administrator, Southwestern, at least seven (7) calendar days prior to the Forum so that a list of forum participants can be developed. The chairman may allow others to speak if time permits.

A transcript of the Forum will be made. Copies of the transcript and all documents introduced will be available for review at Southwestern's offices (see **ADDRESSES**) during normal business hours. Copies of the transcript and all documents introduced may also be obtained, for a fee, from the transcribing service. A copy of all written comments or an electronic copy in MS Word on the proposed Integrated System Rates is due on or before October 7, 2011. Comments should be submitted to Mr. James K. McDonald, Assistant Administrator, Southwestern, at the above-mentioned address for Southwestern's offices.

Following review of the oral and written comments and the information gathered in the course of the proceeding, the Administrator will submit the finalized Integrated System Rate Proposal, Power Repayment Studies, and Rate Design Study in support of the proposed rates to the Deputy Secretary of Energy for confirmation and approval on an interim basis, and subsequently to the Federal Energy Regulatory Commission (Commission) for confirmation and approval on a final basis. The Commission will allow the public an opportunity to provide written comments on the proposed rate increase before making a final decision.

Dated: July 28, 2011.

Jon C. Worthington,

Administrator.

[FR Doc. 2011–20022 Filed 8–5–11; 8:45 am]

BILLING CODE 6450–01–P

ENVIRONMENTAL PROTECTION AGENCY

[FRL–9449–2]

Agency Information Collection Activities OMB Responses

AGENCY: Environmental Protection Agency (EPA).

ACTION: Notice.

SUMMARY: This document announces the Office of Management and Budget (OMB) responses to Agency Clearance requests, in compliance with the Paperwork Reduction Act (44 U.S.C. 3501 *et seq.*). An agency may not conduct or sponsor, and a person is not required to respond to, a collection of information unless it displays a currently valid OMB control number. The OMB control numbers for EPA regulations are listed in 40 CFR part 9 and 48 CFR chapter 15.

FOR FURTHER INFORMATION CONTACT: Rick Westlund (202) 566–1682, or e-mail at *westlund.rick@epa.gov* and please refer to the appropriate EPA Information Collection Request (ICR) Number.

SUPPLEMENTARY INFORMATION:

OMB Responses to Agency Clearance Requests

OMB Approvals

EPA ICR Number 2402.01; Willingness to Pay Survey for Section 316(b) Existing Facilities Cooling Water Intake Structures; was approved on 07/01/2011; OMB Number 2040–0283; expires on 07/31/2013; Approved with change.

EPA ICR Number 1367.09; Regulation of Fuels and Fuel Additives: Gasoline Volatility; 40 CFR 80.27; was approved on 07/27/2011; OMB Number 2060–0178; expires on 07/31/2014; Approved without change.

EPA ICR Number 1051.11; NSPS for Portland Cement Plants (40 CFR part 60, subpart F) (Renewal); was approved on 07/29/2011; OMB Number 2060–0025; expires on 07/31/2014; Approved with revisions.

EPA ICR Number 1767.06; NESHAP for Primary Aluminum Reduction Plants (40 CFR part 63, subpart LL) (Renewal); was approved on 07/29/2011; OMB Number 2060–0360; expires on 07/31/2014; Approved without change.

Short Term Approvals

EPA ICR Number 1704.14: Toxic Chemical Release Reporting, Alternate Threshold for Low Annual Reportable Amounts (Form A) was granted a short term approval to 01/31/2012 on 07/27/2011.

EPA ICR Number 1425.07: Application for Reimbursement to Local Governments for Emergency Response to Hazardous Substance Releases Under CERCLA section 123 was granted a short term approval to 10/31/2011 on 07/25/2011.

Dated: August 2, 2011.

John Moses,

Director, Collections Strategies Division.

[FR Doc. 2011–20025 Filed 8–5–11; 8:45 am]

BILLING CODE 6560–50–P

FARM CREDIT ADMINISTRATION

Farm Credit Administration Board; Sunshine Act; Regular Meeting

AGENCY: Farm Credit Administration.

SUMMARY: Notice is hereby given, pursuant to the Government in the Sunshine Act (5 U.S.C. 552b(e)(3)), of the regular meeting of the Farm Credit Administration Board (Board).

DATE AND TIME: The regular meeting of the Board will be held at the offices of the Farm Credit Administration in McLean, Virginia, on August 11, 2011, from 9 a.m. until such time as the Board concludes its business.

FOR FURTHER INFORMATION CONTACT: Dale L. Aultman, Secretary to the Farm Credit Administration Board, (703) 883–4009, TTY (703) 883–4056.

ADDRESSES: Farm Credit Administration, 1501 Farm Credit Drive, McLean, Virginia 22102–5090.

SUPPLEMENTARY INFORMATION: Parts of this meeting of the Board will be open to the public (limited space available), and parts will be closed to the public. In order to increase the accessibility to Board meetings, persons requiring assistance should make arrangements in advance. The matters to be considered at the meeting are:

Open Session

A. Approval of Minutes

- July 14, 2011

B. New Business

- Capital Adequacy—Ratings-Based Approach—Advance Notice of Proposed Rulemaking

C. Report

- Office of Management Services Quarterly Report

Closed Session *

Reports

- Office of Secondary Mortgage Oversight Quarterly Report

* Session Closed-Exempt pursuant to 5 U.S.C. 552b(c)(8) and (9).

Dated: August 4, 2011.

Dale L. Aultman,

Secretary, Farm Credit Administration Board.

[FR Doc. 2011–20189 Filed 8–4–11; 4:15 pm]

BILLING CODE 6705–01–P

FEDERAL COMMUNICATIONS COMMISSION

Information Collection Being Submitted for Review and Approval to the Office of Management and Budget

AGENCY: Federal Communications Commission.

ACTION: Notice and request for comments.

SUMMARY: The Federal Communications Commission (FCC), as part of its continuing effort to reduce paperwork

burdens, invites the general public and other Federal agencies to take this opportunity to comment on the following information collection, as required by the Paperwork Reduction Act (PRA) of 1995. An agency may not conduct or sponsor a collection of information unless it displays a currently valid control number. No person shall be subject to any penalty for failing to comply with a collection of information subject to the PRA that does not display a valid control number. Comments are requested concerning (a) Whether the proposed collection of information is necessary for the proper performance of the functions of the Commission, including whether the information shall have practical utility; (b) the accuracy of the Commission's burden estimate; (c) ways to enhance the quality, utility, and clarity of the information collected; (d) ways to minimize the burden of the collection of information on the respondents, including the use of automated collection techniques or other forms of information technology; and (e) ways to further reduce the information collection burden on small business concerns with fewer than 25 employees.

The FCC may not conduct or sponsor a collection of information unless it displays a currently valid control number. No person shall be subject to any penalty for failing to comply with a collection of information subject to the PRA that does not display a valid Office of Management and Budget (OMB) control number.

DATES: Written comments should be submitted on or before September 7, 2011. If you anticipate that you will be submitting comments, but find it difficult to do so within the period of time allowed by this notice, you should advise the contacts below as soon as possible.

ADDRESSES: Direct all PRA comments to Nicholas A. Fraser, OMB, via fax 202–395–5167, or via e-mail *Nicholas_A._Fraser@omb.eop.gov;* and to Cathy Williams, FCC, via e-mail *PRA@fcc.gov* and to *Cathy.Williams@fcc.gov.* Include in the comments the OMB control number as shown in the ''Supplementary Information'' section below.

FOR FURTHER INFORMATION CONTACT: For additional information or copies of the information collection, contact Cathy Williams at (202) 418–2918. To view a copy of this information collection request (ICR) submitted to OMB: (1) Go to the Web page *http://www.reginfo.gov/public/do/PRAMain,* (2) look for the section of the Web page called ''Currently Under Review,'' (3) click on the downward-pointing arrow in the ''Select Agency'' box below the ''Currently Under Review'' heading, (4) select ''Federal Communications Commission'' from the list of agencies presented in the ''Select Agency'' box, (5) click the ''Submit'' button to the right of the ''Select Agency'' box, (6) when the list of FCC ICRs currently under review appears, look for the OMB control number of this ICR and then click on the ICR Reference Number. A copy of the FCC submission to OMB will be displayed.

SUPPLEMENTARY INFORMATION:

OMB Control No.: 3060–xxxx.

Title: Part 25—Satellite Communications; and Part 27–Miscellaneous Wireless Communications Services in the 2.3 GHz Band.

Form No.: N/A.

Type of Review: New information collection.

Respondents: Business or other for profit.

Number of Respondents and Responses: 158 respondents; 2,406 responses.

Estimated Time per Response: 0.5 to 40 hours.

Frequency of Response: Recordkeeping requirement; Third party disclosure requirement, and On occasion reporting requirement.

Obligation to Respond: Required to obtain or retain benefits. The statutory authority for this collection of information is contained in 47 U.S.C. 154, 301, 302(a), 303, 309, 332, 336, and 337.

Total Annual Burden: 23,507 hours.

Annual Cost Burden: $928,200.

Privacy Act Impact Assessment: None.

Federal Communications Commission.

Bulah P. Wheeler,

Deputy Manager, Office of the Secretary, Office of Managing Director.

[FR Doc. 2011–20005 Filed 8–5–11; 8:45 am]

BILLING CODE 6712–01–P

FEDERAL DEPOSIT INSURANCE CORPORATION

FDIC Advisory Committee on Community Banking; Notice of Charter Renewal

AGENCY: Federal Deposit Insurance Corporation (FDIC).

ACTION: Notice of renewal of the FDIC Advisory Committee on Community Banking.

SUMMARY: Pursuant to the provisions of the Federal Advisory Committee Act (''FACA''), 5 U.S.C. App. 2, and after consultation with the General Services Administration, the Chairman of the Federal Deposit Insurance Corporation has determined that renewal of the FDIC Advisory Committee on Community Banking (''the Committee'') is in the public interest in connection with the performance of duties imposed upon the FDIC by law. The Committee has been a successful undertaking by the FDIC and has provided valuable feedback to the agency on a broad range of policy issues that have particular impact on small community banks throughout the United States and the local communities they serve, with a focus on rural areas. The Committee will continue to review various issues that may include, but not be limited to, the latest examination policies and procedures, credit and lending practices, deposit insurance assessments, insurance coverage issues, and regulatory compliance matters, as well as any obstacles to the continued growth and ability of community banks to extend financial services in their local markets in the current market environment. The structure and responsibilities of the Committee are unchanged from when it was originally established in July 2009. The Committee will continue to operate in accordance with the provisions of the Federal Advisory Committee Act.

FOR FURTHER INFORMATION CONTACT: Mr. Robert E. Feldman, Committee Management Officer of the FDIC, at (202) 898–7043.

Dated: August 3, 2011.

Federal Deposit Insurance Corporation.

Robert E. Feldman,

Committee Management Officer.

[FR Doc. 2011–20017 Filed 8–5–11; 8:45 am]

BILLING CODE 6714–01–P

FEDERAL DEPOSIT INSURANCE CORPORATION

Sunshine Act Meeting

Pursuant to the provisions of the ''Government in the Sunshine Act'' (5 U.S.C. 552b), notice is hereby given that at 12:58 p.m. on Thursday, August 4, 2011, the Board of Directors of the Federal Deposit Insurance Corporation met in closed session to consider matters related to the Corporation's supervision, corporate, and resolution activities.

In calling the meeting, the Board determined, on motion of Director Thomas J. Curry (Appointive), seconded by Director John G. Walsh (Acting Comptroller of the Currency), and concurred in by Acting Chairman Martin J. Gruenberg, that Corporation

business required its consideration of the matters which were to be the subject of this meeting on less than seven days' notice to the public; that no earlier notice of the meeting was practicable; that the public interest did not require consideration of the matters in a meeting open to public observation; and that the matters could be considered in a closed meeting by authority of subsections (c)(2), (c)(4), (c)(6), (c)(8), (c)(9)(A)(ii), (c)(9)(B), and (c)(10) of the ''Government in the Sunshine Act'' (5 U.S.C. 552b(c)(2), (c)(4), (c)(6), (c)(8), (c)(9)(A)(ii), (c)(9)(B), and (c)(10)).

The meeting was held in the Board Room of the FDIC Building located at 550—17th Street, NW., Washington, DC.

Dated: August 4, 2011.

Federal Deposit Insurance Corporation.

Robert E. Feldman,

Executive Secretary.

[FR Doc. 2011–20183 Filed 8–4–11; 4:15 pm]

BILLING CODE P

FEDERAL ELECTION COMMISSION

Sunshine Act Notice

AGENCY: Federal Election Commission.

Federal Register Citation of Previous Announcement—76 FR 45798 (August 1, 2011)

DATE AND TIME: *Thursday, August 4, 2011, at 10 a.m.*

PLACE: 999 E Street, NW., Washington, DC (Ninth Floor).

STATUS: Meeting open to the public.

CHANGES IN THE MEETING: The following item was withdrawn from the agenda: Audit Division Recommendation Memorandum on Nader for President (2008) (NFP).

Individuals who plan to attend and require special assistance, such as sign language interpretation or other reasonable accommodations, should contact Shawn Woodhead Werth, Commission Secretary and Clerk, at (202) 694–1040, at least 72 hours prior to the hearing date.

PERSON TO CONTACT FOR INFORMATION: Judith Ingram, Press Officer, Telephone: (202) 694–1220.

Shawn Woodhead Werth,

Secretary and Clerk of the Commission.

[FR Doc. 2011–20106 Filed 8–4–11; 11:15 am]

BILLING CODE 6715–01–P

FEDERAL RESERVE SYSTEM

Change in Bank Control Notices; Formations of, Acquisitions by, and Mergers of Bank Holding Companies; Correction

This notice corrects a notice (FR Doc. 2011–19441) published on pages 46296 and 46297 of the issue for Tuesday, August 2, 2011.

Under the Federal Reserve Bank of Philadelphia heading, the entry for, *Patriot Financial Partners, GP, L.P., Patriot Financial Partners, L.P., Patriot Financial Partners Parallel, L.P., Patriot Financial Partners, GP, LLC, Patriot Financial Managers, L.P., and Ira M. Lubert, W. Kirk Wycoff and James J. Lynch,* all of Philadelphia, Pennsylvania, is revised to read as follows:

A. Federal Reserve Bank of Philadelphia (William Lang, Senior Vice President), 100 North 6th Street, Philadelphia, Pennsylvania 19105–1521:

1. *Patriot Financial Partners, GP, L.P., Patriot Financial Partners, L.P., Patriot Financial Partners Parallel, L.P., Patriot Financial Partners, GP, LLC, Patriot Financial Managers, L.P., Patriot Financial Managers, LLC, and Ira M. Lubert, W. Kirk Wycoff and James J. Lynch,* all of Philadelphia, Pennsylvania; to acquire voting shares of Porter Bancorp, Inc., Louisville, Kentucky, and thereby indirectly acquire voting shares of PBI Bank, Louisville, Kentucky.

Comments on this application must be received by August 11, 2011.

Board of Governors of the Federal Reserve System, August 3, 2011.

Robert deV. Frierson,

Deputy Secretary of the Board.

[FR Doc. 2011–19977 Filed 8–5–11; 8:45 am]

BILLING CODE 6210–01–P

FEDERAL RESERVE SYSTEM

Formations of, Acquisitions by, and Mergers of Bank Holding Companies

The companies listed in this notice have applied to the Board for approval, pursuant to the Bank Holding Company Act of 1956 (12 U.S.C. 1841 *et seq.*) (BHC Act), Regulation Y (12 CFR part 225), and all other applicable statutes and regulations to become a bank holding company and/or to acquire the assets or the ownership of, control of, or the power to vote shares of a bank or bank holding company and all of the banks and nonbanking companies owned by the bank holding company, including the companies listed below.

The applications listed below, as well as other related filings required by the Board, are available for immediate inspection at the Federal Reserve Bank indicated. The application also will be available for inspection at the offices of the Board of Governors. Interested persons may express their views in writing on the standards enumerated in the BHC Act (12 U.S.C. 1842(c)). If the proposal also involves the acquisition of a nonbanking company, the review also includes whether the acquisition of the nonbanking company complies with the standards in section 4 of the BHC Act (12 U.S.C. 1843). Unless otherwise noted, nonbanking activities will be conducted throughout the United States.

Unless otherwise noted, comments regarding each of these applications must be received at the Reserve Bank indicated or the offices of the Board of Governors not later than September 2, 2011.

A. Federal Reserve Bank of Boston (Richard Walker, Community Affairs Officer) P.O. Box 55882, Boston, Massachusetts 02106–2204:

1. *Hyde Park Bancorp, MHC,* to acquire Hyde Park Bancorp, Inc., both in Boston, Massachusetts; and Hyde Park Bancorp, Inc., to become a bank holding company by acquiring 100 percent of the voting shares of Hyde Park Savings Bank, Boston, Massachusetts.

B. Federal Reserve Bank of New York (Ivan Hurwitz, Vice President) 33 Liberty Street, New York, New York 10045–0001:

1. Santander Holdings USA, Boston, Massachusetts; to become a bank holding company by acquiring 100 percent of the voting shares of Sovereign Bank, Wilmington, Delaware.

In connection with the above application, Banco Santander, S.A. Boadilla del Monte Madrid, Spain, has applied to retain control of Santander Holdings USA, Inc., Boston, Massachusetts, and Sovereign Bank, Wilmington, Delaware.

C. Federal Reserve Bank of San Francisco (Kenneth Binning, Vice President, Applications and Enforcement) 101 Market Street, San Francisco, California 94105–1579:

1. *Carpenter Fund Manager GP, LLC, Carpenter Fund Management Company, LLC, Carpenter Community Bancfund, L.P., Carpenter Community Bancfund-A, L.P., CCFW, Inc., SCJ, Inc., and CCI One Acquisition Corporation,* all in Irvine, California, to acquire 100 percent of the voting securities of Santa Lucia Bancorp, and thereby indirectly acquire voting shares of Santa Lucia Bank, both in Atascadero, California.

Board of Governors of the Federal Reserve System, August 3, 2011.

Robert deV. Frierson,

Deputy Secretary of the Board.

[FR Doc. 2011–19978 Filed 8–5–11; 8:45 am]

BILLING CODE 6210–01–P

DEPARTMENT OF HEALTH AND HUMAN SERVICES

Centers for Disease Control and Prevention

[30Day–11–11FE]

Agency Forms Undergoing Paperwork Reduction Act Review

The Centers for Disease Control and Prevention (CDC) publishes a list of information collection requests under review by the Office of Management and Budget (OMB) in compliance with the Paperwork Reduction Act (44 U.S.C. chapter 35). To request a copy of these requests, call the CDC Reports Clearance Officer at (404) 639–5960 or send an e-mail to *omb@cdc.gov.* Send written comments to CDC Desk Officer, Office of Management and Budget, Washington, DC 20503 or by fax to (202) 395–5806. Written comments should be received within 30 days of this notice.

Proposed Project

Musculoskeletal Disorder (MSD) Intervention Effectiveness in Wholesale/Retail Trade Operations—New—National Institute for Occupational Safety and Health (NIOSH), Centers for Disease Control and Prevention (CDC).

Background and Brief Description

For the current study, the National Institute for Occupational Safety and Health (NIOSH) and the Ohio Bureau of Workers Compensation (OBWC) will collaborate on a multi-site intervention study at OBWC-insured wholesale/retail trade (WRT) companies from 2011–2014. In overview, MSD engineering control interventions [stair-climbing, powered hand trucks (PHT) and powered truck lift gates (TLG)] will be tested for effectiveness in reducing self-reported back and upper extremity pain among 960 employees performing delivery operations in 72 WRT establishments using a prospective experimental design (multiple baselines across groups with randomization). The costs of the interventions will be funded through existing OBWC funds and participating establishments. This study will provide important information that is not currently available elsewhere on the effectiveness of OSH interventions for WRT workers.

Twenty-four OBWC-insured WRT establishments will be recruited from each of three total employee categories (<20 employees, 20–99 employees, and 100+ employees) for a total of 72 establishments with 3,240 employees. The study sub-sample (people, work groups or workplaces chosen from the sampling frame) will be volunteer employees at OBWC-insured WRT establishments who perform material handling tasks related to the delivery operations of large items (such as appliances, furniture, vending machines, furnaces, or water heaters) that are expected to be impacted by the powered hand truck (PHT) and truck lift gate (TLG) interventions. It is estimated that there will be 960 impacted employees in the recruited establishments, which will be paired according to previous WC loss history and establishment size. Within each pair, one establishment will be randomly chosen to receive the PHT or TLG intervention in the first phase, and the other will serve as a matched control until it receives the same intervention 12 months later.

The main outcomes for this study are self-reported low back pain and upper extremity pain collected using surveys every three months over a two-year period from volunteer WRT delivery workers at participating establishments. Individuals will also be asked to report usage of the interventions and material handling exposures every three months over two years. Individuals will also be asked to complete an annual health assessment survey at baseline, and once annually for two years. A 20% sample of survey participants will also be asked to participate in a clinical assessment of low back function at baseline, and once annually for two years. In order to maximize efficiency and reduce burden, a web-based survey is proposed for the majority (95%) of survey data collection. All collected information will be used to determine whether there are significant differences in reported musculoskeletal pain and functional back pain score ratios (pre/post intervention scores) when intervention and control groups are compared, while controlling for covariates. Once the study is completed, results will be made available through the NIOSH internet site and peer-reviewed publications.

In summary, this study will determine the effectiveness of the tested MSD interventions for WRT delivery workers and enable evidence based prevention practices to be shared with the greatest audience possible. NIOSH expects to complete data collection in 2014. There is no cost to respondents other than their time. The total estimated annual burden hours are 1,500.

Estimated Annualized Burden Hours

Type of respondent	Form name	Number of respondents	Number of responses per respondent	Avg. burden per response (in hours)
Delivery Workers in Wholesale/Retail Trade (WRT) Operations.	Self-reported low back pain	960	4.5	5/60
	Self-reported upper extremity pain	960	4.5	5/60
	Self-reported specific job tasks and safety incidents.	960	4.5	5/60
	Self-reported general work environment and health.	960	1.5	10/60
	Informed Consent Form (Overall Study)	960	.5	5/60
	Low Back Functional Assessment	192	1.5	20/60
	Informed Consent Form (Low Back Functional Assessment).	960	.5	5/60
	Early Exit Interview	106	.5	5/60

Dated: August 1, 2011.

Daniel Holcomb,

Reports Clearance Officer, Centers for Disease Control and Prevention.

[FR Doc. 2011–20033 Filed 8–5–11; 8:45 am]

BILLING CODE 4163–18–P

DEPARTMENT OF HEALTH AND HUMAN SERVICES

Administration for Children and Families

Submission for OMB Review; Comment Request

Title: Refugee Assistance Program Estimates CMA—ORR–1.

OMB No.: 0970–0030.

Description: The ORR–1, Cash and Medical Assistance (CMA) Program Estimates, is the application for grants under the CMA program. The application is required by the Office of Refugee Resettlement (ORR) program regulations at 45 CFR 400.11(b). The regulation specifies that States must submit, as their application for this program, estimates of the projected costs they anticipate incurring in providing cash and medical assistance for eligible recipients and the costs of administering the program. Under the CMA program, States are reimbursed for the costs of providing these services and benefits for eight months after an eligible recipient arrives in this country. The eligible recipients for these services and benefits are refugees, Amerasians, Cuban and Haitian Entrants, asylees, Afghans and Iraqi with Special Immigrant Visas, and victims of a severe form of trafficking. States that provide services for unaccompanied refugee minors also provide an estimate for the cost of these services for the year for which they are applying for a grant.

Respondents:

Instrument	Number of respondents	Number of responses per respondent	Average burden hours per response	Total burden hours
ORR–1	46	1	0.60	27.60

Estimated Total Annual Burden Hours: 27.60.

Additional Information: Copies of the proposed collection may be obtained by writing to the Administration for Children and Families, Office of Administration, Office of Information Services, 370 L'Enfant Promenade, SW., Washington, DC 20447, *Attn:* ACF Reports Clearance Officer. All requests should be identified by the title of the information collection. *E-mail address: infocollection@acf.hhs.gov.*

OMB Comment: OMB is required to make a decision concerning the collection of information between 30 and 60 days after publication of this document in the **Federal Register**. Therefore, a comment is best assured of having its full effect if OMB receives it within 30 days of publication. Written comments and recommendations for the proposed information collection should be sent directly to the following: Office of Management and Budget, Paperwork Reduction Project, *Fax:* 202–395–7285, *E-mail: OIRA_SUBMISSION@OMB.eop.gov, Attn:* Desk Officer for the Administration for Children and Families.

Robert Sargis,

Reports Clearance Officer.

[FR Doc. 2011–19973 Filed 8–5–11; 8:45 am]

BILLING CODE 4184–01–P

DEPARTMENT OF HEALTH AND HUMAN SERVICES

Administration for Children and Families

Submission for OMB Review; Comment Request

Title: Low Income Home Energy Assistance Program (LIHEAP) Carryover and Reallotment Report.

OMB No.: 0970–0106.

Description: The LIHEAP statute and regulations require LIHEAP grantees to report certain information to HHS concerning funds forwarded and funds subject to reallotment. The 1994 reauthorization of the LIHEAP statute, the Human Service Amendments of 1994 (Pub. L. 103–252), requires that the Carryover and Reallotment Report for one fiscal year be submitted to HHS by the grantee before the allotment for the next fiscal year may be awarded.

The Administration for Children and Families is requesting no changes in the collection of data with the Carryover and Reallotment Report, a form for the collection of data, and the Simplified Instructions for Timely Obligations of LIHEAP Funds and Reporting Funds for Carryover and Reallotment. The form clarifies the information being requested and ensures the submission of all the required information. The form facilitates our response to numerous queries each year concerning the amounts of obligated funds. Use of the form is voluntary. Grantees have the option to use another format.

Respondents: State Governments, Tribal Governments, Insular Areas, the District of Columbia, and the Commonwealth of Puerto Rico.

ANNUAL BURDEN ESTIMATES

Instrument	Number of respondents	Number of responses per respondent	Average burden hours per response	Total burden hours
Carryover and Reallotment Report	192	1	3	576

Estimated Total Annual Burden Hours: 576.

Additional Information: Copies of the proposed collection may be obtained by writing to the Administration for Children and Families, Office of Administration, Office of Information Services, 370 L'Enfant Promenade, SW., Washington, DC 20447, *Attn:* ACF Reports Clearance Officer. All requests should be identified by the title of the information collection. *E-mail address: infocollection@acf.hhs.gov.*

OMB Comment: OMB is required to make a decision concerning the collection of information between 30 and 60 days after publication of this

document in the **Federal Register**. Therefore, a comment is best assured of having its full effect if OMB receives it within 30 days of publication. Written comments and recommendations for the proposed information collection should be sent directly to the following: Office of Management and Budget, Paperwork Reduction Project, *Fax:* 202–395–7285, *E-mail: OIRA_SUBMISSION@OMB.eop.gov, Attn:* Desk Officer for the Administration for Children and Families.

Robert Sargis,

Reports Clearance Officer.

[FR Doc. 2011–19974 Filed 8–5–11; 8:45 am]

BILLING CODE 4184–01–P

DEPARTMENT OF HEALTH AND HUMAN SERVICES

Food and Drug Administration

[Docket No. FDA–2011–N–0085]

Agency Information Collection Activities; Submission for Office of Management and Budget Review; Comment Request; Cooperative Manufacturing Arrangements for Licensed Biologics

AGENCY: Food and Drug Administration, HHS.

ACTION: Notice.

SUMMARY: The Food and Drug Administration (FDA) is announcing that a proposed collection of information has been submitted to the Office of Management and Budget (OMB) for review and clearance under the Paperwork Reduction Act of 1995.

DATES: Fax written comments on the collection of information by September 7, 2011.

ADDRESSES: To ensure that comments on the information collection are received, OMB recommends that written comments be faxed to the Office of Information and Regulatory Affairs, OMB, *Attn:* FDA Desk Officer, *Fax:* 202–395–7285, or e-mailed to *oira_submission@omb.eop.gov*. All comments should be identified with the OMB control number 0910–0629. Also include the FDA docket number found in brackets in the heading of this document.

FOR FURTHER INFORMATION CONTACT: Juanmanuel Vilela, Office of Information Management, Food and Drug Administration, 1350 Piccard Dr., PI50–400B, Rockville, MD 20850, 301–796–7651, *juanmanuel.vilela@fda.hhs.gov*.

SUPPLEMENTARY INFORMATION: In compliance with 44 U.S.C. 3507, FDA has submitted the following proposed collection of information to OMB for review and clearance.

Guidance for Industry: Cooperative Manufacturing Arrangements For Licensed Biologics—(OMB Control Number 0910–0629)—Extension

The guidance document provides information concerning cooperative manufacturing arrangements applicable to biological products subject to licensure under section 351 of the Public Health Service Act (42 U.S.C. 262). The guidance addresses several types of manufacturing arrangements (*i.e.,* short supply arrangements, divided manufacturing arrangements, shared manufacturing arrangements, and contract manufacturing arrangements) and describes certain reporting and recordkeeping responsibilities, associated with these arrangements, including the following: (1) Notification of all important proposed changes to production and facilities; (2) notification of results of tests and investigations regarding or possibly impacting the product; (3) notification of products manufactured in a contract facility; and (4) standard operating procedures.

(1) Notification of All Important Proposed Changes to Production and Facilities

Each licensed manufacturer in a divided manufacturing arrangement or shared manufacturing arrangement must notify the appropriate FDA center regarding proposed changes in the manufacture, testing, or specifications of its product, in accordance with § 601.12 (21 CFR 601.12). In the guidance, we recommend that each licensed manufacturer that proposes such a change should also inform other participating licensed manufacturer(s) of the proposed change.

For contract manufacturing arrangements, we recommend that the contract manufacturer should share with the license manufacturer all important proposed changes to production and facilities (including introduction of new products or at inspection). The license holder is responsible for reporting these changes to FDA (§ 601.12).

(2) Notification of Results of Tests and Investigations Regarding or Possibly Impacting the Product

In the guidance, we recommend the following for contract manufacturing arrangements:

- The contract manufacturer should fully inform the license manufacturer of the results of all tests and investigations regarding or possibly having an impact on the product; and
- The license manufacturer should obtain assurance from the contractor that any FDA list of inspectional observations will be shared with the license manufacturer to allow evaluation of its impact on the purity, potency, and safety of the license manufacturer's product.

(3) Notification of Products Manufactured in a Contract Facility

In the guidance, we recommend for contract manufacturing arrangements that a license manufacturer cross reference a contract manufacturing facility's Master Files only in circumstances involving certain proprietary information of the contract manufacturer, such as a list of all products manufactured in a contract facility. In this situation, the license manufacturer should be kept informed of the types or categories of all products manufactured in the contract facility.

(4) Standard Operating Procedures

In the guidance, we remind the license manufacturer that the license manufacturer assumes responsibility for compliance with the applicable product and establishment standards (21 CFR 600.3(t)). Therefore, if the license manufacturer enters into an agreement with a contract manufacturing facility, the license manufacturer must ensure that the facility complies with the applicable standards. An agreement between a license manufacturer and a contract manufacturing facility normally includes procedures to regularly assess the contract manufacturing facility's compliance. These procedures may include, but are not limited to, review of records and manufacturing deviations and defects, and periodic audits.

For shared manufacturing arrangements, each manufacturer must submit a separate biologics license application (BLA) describing the manufacturing facilities and operations applicable to the preparation of that manufacturer's biological substance or product (§ 601.2(a)). In the guidance, we state that we expect the manufacturer that prepares (or is responsible for the preparation of) the product in final form for commercial distribution to assume primary responsibility for providing data demonstrating the safety, purity, and potency of the final product. We also state that we expect the licensed finished product manufacturer to be primarily responsible for any post-approval obligations, such as

postmarketing clinical trials, additional product stability studies, complaint handling, recalls, postmarket reporting of the dissemination of advertising and promotional labeling materials as required under § 601.12(f)(4) and adverse experience reporting. We recommend that the final product manufacturer establish a procedure with the other participating manufacturer(s) to obtain information in these areas.

Description of Respondents: The recordkeeping and reporting recommendations described in this document affect the participating licensed manufacturer(s), final product manufacturer(s), and contract manufacturer(s) associated with cooperative manufacturing arrangements.

Burden Estimate: We believe that the information collection provisions in the guidance do not create a new burden for respondents. We believe the reporting and recordkeeping provisions are part of usual and customary business practices. Licensed manufacturers would have contractual agreements with participating licensed manufacturers, final product manufacturers, and contract manufacturers, as applicable for the type of cooperative manufacturing arrangement, to address all these information collection provisions.

The guidance also refers to previously approved collections of information found in FDA regulations at parts 201, 207, 211, 600, 601, 606, 607, 610, 660, 801, 803, and 807, 809, and 820 (21 CFR parts 201, 207, 211, 600, 601, 606, 607, 610, 660, 801, 803, 807, 809, and 820). The collections of information in §§ 606.121, 606.122, and 610.40 have been approved under OMB control number 0910–0116; § 610.2 has been approved under OMB control number 0910–0206; §§ 600.12(e) and 600.80 have been approved under OMB control number 0910–0308; §§ 601.2(a), 601.12, 610.60 through 610.65, 610.67, 660.2(c), 660.28(a) and (b), 660.35(a), (c) through (g), and (i) through (m), 660.45, and 660.55(a) and (b) have been approved under OMB control number 0910–0338; §§ 803.20, 803.50, and 803.53 have been approved under OMB control number 0910–0437; and §§ 600.14 and 606.171 have been approved under OMB control number 0910–0458. The current good manufacturing practice regulations for finished pharmaceuticals (part 211) have been approved under OMB control number 0910–0139; §§ 820.181 and 820.184 have been approved under OMB control number 0910–0073; the establishment registration regulations (parts 207, 607, and 807) have been approved under OMB control numbers 0910–0045, 0910–0052, and 0910–0387; and the labeling regulations (parts 201, 801, and 809) have been approved under OMB control numbers 0910–0537, 0910–0572, and 0910–0485.

In the **Federal Register** of March 16, 2011 (76 FR 14405), FDA published a 60-day notice requesting public comment on the proposed collection of information. No comments were received from the public.

Dated: August 2, 2011.

David Dorsey,

Acting Associate Commissioner for Policy and Planning.

[FR Doc. 2011–19958 Filed 8–5–11; 8:45 am]

BILLING CODE 4160–01–P

DEPARTMENT OF HEALTH AND HUMAN SERVICES

Food and Drug Administration

[Docket No. FDA–2011–N–0508]

Agency Information Collection Activities; Proposed Collection; Comment Request; Blood Establishment Registration and Product Listing, Form FDA 2830

AGENCY: Food and Drug Administration, HHS.

ACTION: Notice.

SUMMARY: The Food and Drug Administration (FDA) is announcing an opportunity for public comment on the proposed collection of certain information by the Agency. Under the Paperwork Reduction Act of 1995 (the PRA), Federal Agencies are required to publish notice in the **Federal Register** concerning each proposed collection of information, including each proposed extension of an existing collection of information, and to allow 60 days for public comment in response to the notice. This notice solicits comments on the information collection requirements relating to the blood establishment registration and product listing requirements in the Agency's regulations and Form FDA 2830.

DATES: Submit either electronic or written comments on the collection of information by October 7, 2011.

ADDRESSES: Submit electronic comments on the collection of information to *http://www.regulations.gov.* Submit written comments on the collection of information to the Division of Dockets Management (HFA–305), Food and Drug Administration, 5630 Fishers Lane, rm. 1061, Rockville, MD 20852. All comments should be identified with the docket number found in brackets in the heading of this document.

FOR FURTHER INFORMATION CONTACT: Juanmanuel Vilela, Office of Information Management, Food and Drug Administration, 1350 Piccard Dr., PI50–400B, Rockville, MD 20850, 301–796–7651.

SUPPLEMENTARY INFORMATION: Under the PRA (44 U.S.C. 3501–3520), Federal Agencies must obtain approval from the Office of Management and Budget (OMB) for each collection of information they conduct or sponsor. ''Collection of information'' is defined in 44 U.S.C. 3502(3) and 5 CFR 1320.3(c) and includes Agency requests or requirements that members of the public submit reports, keep records, or provide information to a third party. Section 3506(c)(2)(A) of the PRA (44 U.S.C. 3506(c)(2)(A)) requires Federal Agencies to provide a 60-day notice in the **Federal Register** concerning each proposed collection of information, including each proposed extension of an existing collection of information, before submitting the collection to OMB for approval. To comply with this requirement, FDA is publishing notice of the proposed collection of information set forth in this document.

With respect to the following collection of information, FDA invites comments on these topics: (1) Whether the proposed collection of information is necessary for the proper performance of FDA's functions, including whether the information will have practical utility; (2) the accuracy of FDA's estimate of the burden of the proposed collection of information, including the validity of the methodology and assumptions used; (3) ways to enhance the quality, utility, and clarity of the information to be collected; and (4) ways to minimize the burden of the collection of information on respondents, including through the use of automated collection techniques, when appropriate, and other forms of information technology.

Blood Establishment Registration and Product Listing, Form FDA 2830—21 CFR Part 607—(OMB Control Number 0910–0052)—Extension

Under section 510 of the Federal Food, Drug, and Cosmetic Act (21 U.S.C. 360), any person owning or operating an establishment that manufactures, prepares, propagates, compounds, or processes a drug or device must register with the Secretary of Health and Human Services, on or before December 31 of each year, his or her name, place of business, and all such establishments, and must submit, among other

information, a listing of all drug or device products manufactured, prepared, propagated, compounded, or processed by him or her for commercial distribution. In part 607 (21 CFR part 607), FDA has issued regulations implementing these requirements for manufacturers of human blood and blood products.

Section 607.20(a), in brief, requires owners or operators of certain establishments that engage in the manufacture of blood products to register and to submit a list of every blood product in commercial distribution. Section 607.21, in brief, requires the owners or operators of establishments entering into the manufacturing of blood products to register within 5 days after beginning such operation and to submit a list of every blood product in commercial distribution at the time. If the owner or operator of the establishment has not previously entered into such operation for which a license is required, registration must follow within 5 days after the submission of a biologics license application. In addition, owners or operators of all establishments so engaged must register annually between November 15 and December 31 and must update their blood product listing information every June and December. Section 607.22 requires the use of Form FDA 2830 (Blood Establishment Registration and Product Listing) for initial registration, subsequent annual registration, and for blood product listing information. Section 607.25 sets forth the information required for establishment registration and blood product listing. Section 607.26, in brief, requires certain changes to be submitted on Form FDA 2830 as an amendment to establishment registration within 5 days of such changes. Section 607.30(a), in brief, sets forth the information required from owners or operators of establishments when updating their blood product listing information every June and December, or at the discretion of the registrant at the time the change occurs. Section 607.31 requires that additional blood product listing information be provided upon FDA request. Section 607.40, in brief, requires certain foreign blood product establishments to comply with the establishment registration and blood product listing information requirements discussed above and to provide the name and address of the establishment and the name of the individual responsible for submitting establishment registration and blood product listing information as well as the name, address, and phone number of its U.S. agent.

Among other uses, this information assists FDA in its inspections of facilities, and its collection is essential to the overall regulatory scheme designed to ensure the safety of the nation's blood supply. Form FDA 2830 is used to collect this information.

Respondents to this collection of information are human blood and plasma donor centers, blood banks, certain transfusion services, other blood product manufacturers, and independent laboratories that engage in quality control and testing for registered blood product establishments.

FDA estimates the burden of this collection of information based upon information obtained from FDA's Center for Biologics Evaluation and Research's database and FDA experience with the blood establishment registration and product listing requirements.

FDA estimates the burden of this collection of information as follows:

TABLE 1—ESTIMATED ANNUAL REPORTING BURDEN [1]

21 CFR Section	Form FDA 2830	Number of respondents	Number of responses per respondent	Total annual responses	Average burden per response (in hours)	Total hours
607.20(a), 607.21, 607.22, 607.25, and 607.40.	Initial Registration	49	1	49	1	49
607.21, 607.22, 607.25, 607.26, 607.31, and 607.40.	Re-registration	2,589	1	2,589	0.5	1,294
607.21, 607.25, 607.30(a), 607.31, and 607.40.	Product Listing Update	180	1	180	0.25	45
Total						1,388

[1] There are no capital costs or operating and maintenance costs associated with this collection of information.

Dated: July 26, 2011.

David Dorsey,

Acting Deputy Commissioner for Policy, Planning and Budget.

[FR Doc. 2011–19955 Filed 8–5–11; 8:45 am]

BILLING CODE 4160–01–P

DEPARTMENT OF HEALTH AND HUMAN SERVICES

Food and Drug Administration

[Docket No. FDA–2011–N–0126]

Andrew K. Choi: Debarment Order

AGENCY: Food and Drug Administration, HHS.

ACTION: Notice.

SUMMARY: The Food and Drug Administration (FDA) is issuing an order under the Federal Food, Drug, and Cosmetic Act (the FD&C Act) debarring Andrew K. Choi, M.D. for 4 years from providing services in any capacity to a person that has an approved or pending drug product application. FDA bases this order on findings that Dr. Choi was convicted of a misdemeanor under Federal law for conduct relating to the regulation of a drug product under the FD&C Act and that the type of conduct underlying the conviction undermines the process for the regulation of drugs. Dr. Choi was given notice of the proposed debarment and an opportunity to request a hearing within the timeframe prescribed by regulation. Dr. Choi failed to respond. Dr. Choi's failure to respond constitutes a waiver of his right to a hearing concerning this action.

DATES: This order is effective August 8, 2011.

ADDRESSES: Submit applications for termination of debarment to the Division of Dockets Management (HFA–305), Food and Drug Administration, 5630 Fishers Lane, rm. 1061, Rockville, MD 20852.

FOR FURTHER INFORMATION CONTACT: Kenny Shade, Division of Compliance Policy (HFC–230), Food and Drug Administration, 5600 Fishers Lane, Rockville, MD 20857, 301–796–4640.

SUPPLEMENTARY INFORMATION:

I. Background

Section 306(b)(2)(B)(i)(I) of the FD&C Act (21 U.S.C. 335a(b)(2)(B)(i)(I)) permits FDA to debar an individual if it finds that the individual has been convicted of a misdemeanor under Federal law for conduct relating to the regulation of drug products under the FD&C Act, and if FDA finds that the type of conduct that served as the basis for the conviction undermines the process for the regulation of drugs.

On April 2, 2007, Dr. Choi pleaded guilty to one count of receipt in interstate commerce of a misbranded drug and delivery thereof in violation of sections 301(c), 303(c), and 502(f) of the FD&C Act (21 U.S.C. 331(c), 333(a)(1), and 352(f)). On August 11, 2008, the U.S. District Court for the Central District of California entered judgment against Dr. Choi for the misdemeanor offense of receipt in interstate commerce of a misbranded drug and delivery thereof.

FDA's finding that debarment is appropriate is based on the misdemeanor conviction referenced herein. The factual basis for the conviction is as follows: Dr. Choi was a licensed physician in the State of California. Prior to November 13, 2003, Dr. Choi injected patients with Botox®, an FDA-approved Botulinum Toxin Type A drug product manufactured by Allergan, Inc. In 2003, Dr. Choi began ordering an unapproved drug purported to be Botulinum Toxin Type A (TRI–Toxin) manufactured by Toxin Research International, Inc. (TRI), located in Tucson, Arizona, instead of the approved Botox®. From on or about November 13, 2003, and continuing until about August 3, 2004, Dr. Choi placed 14 orders for a total of 28 vials of TRI–Toxin, which he had shipped to his office in the Central District of California. The TRI–Toxin did not come with labeling or directions on how to dilute the product for injection. The TRI–Toxin label stated ''for research purposes only'' and ''not for human use,'' as did the TRI–Toxin invoices. Dr. Choi admitted to injecting the TRI–Toxin into his employees and patients. Between on or about November 13, 2003, and continuing until on or about August 3, 2004, Dr. Choi received and delivered the TRI–Toxin when he administered it to other persons, all in violation of sections 301(c), 303(c), and 502(f) of the FD&C Act.

As a result of his conviction, on April 22, 2011, FDA sent Dr. Choi a notice by certified mail proposing to debar him for 4 years from providing services in any capacity to a person that has an approved or pending drug product application. FDA subsequently confirmed on May 9, 2011, that Dr. Choi personally received the notice. The proposal was based on a finding, under section 306(b)(2)(B)(i)(I) of the FD&C Act that Dr. Choi was convicted of a misdemeanor under Federal law for conduct relating to the regulation of drug products under the FD&C Act, and that the conduct that served as a basis for the conviction undermines the process for the regulation of drugs. The proposal also offered Dr. Choi an opportunity to request a hearing, providing him 30 days from the date of receipt of the letter in which to file the request, and advised him that failure to request a hearing constituted a waiver of the opportunity for a hearing and of any contentions concerning this action. Dr. Choi failed to respond within the timeframe prescribed by regulation and has therefore, waived his opportunity for a hearing and waived any contentions concerning his debarment (21 CFR part 12).

II. Findings and Order

Therefore, the Director, Office of Enforcement, Office of Regulatory Affairs, under section 306(b)(2)(B)(i)(I) of the FD&C Act under authority delegated to him (Staff Manual Guide 1410.35), finds that Andrew K. Choi has been convicted of a misdemeanor under Federal law for conduct relating to the regulation of a drug product under the FD&C Act, and that the type of conduct that served as a basis for the conviction undermines the process for the regulation of drugs.

As a result of the foregoing finding, Dr. Choi is debarred for 4 years from providing services in any capacity to a person with an approved or pending drug product application under sections 505, 512, or 802 of the FD&C Act (21 U.S.C. 355, 360b, or 382), or under section 351 of the Public Health Service Act (42 U.S.C. 262), effective (see **DATES**), (see sections 306(c)(1)(B), (c)(2)(A)(iii), and 201(dd) of the FD&C Act (21 U.S.C. 335a(c)(1)(B), (c)(2)(A)(iii), and 321(dd))). Any person with an approved or pending drug product application who knowingly employs or retains as a consultant or contractor, or otherwise uses the services of Dr. Choi, in any capacity during Dr. Choi's debarment, will be subject to civil money penalties (section 307(a)(6) of the FD&C Act (21 U.S.C. 335b(a)(6))). If Dr. Choi provides services in any capacity to a person with an approved or pending drug product application during his period of debarment he will be subject to civil money penalties (section 307(a)(7) of the FD&C Act). In addition, FDA will not accept or review any abbreviated new drug applications submitted by or with the assistance of Dr. Choi during his period of debarment (section 306(c)(1)(B) of the FD&C Act).

Any application by Dr. Choi for termination of debarment under section 306(d)(1) of the FD&C Act (21 U.S.C. 335a(d)(1)) should be identified with Docket No. FDA–2011–N–0126 and sent to the Division of Dockets Management (see **ADDRESSES**). All such submissions are to be filed in four copies. The public availability of information in these submissions is governed by 21 CFR 10.20(j).

Publicly available submissions may be seen in the Division of Dockets Management between 9 a.m. and 4 p.m., Monday through Friday.

Dated: July 27, 2011.

Armando Zamora,

Acting Director, Office of Enforcement, Office of Regulatory Affairs.

[FR Doc. 2011–19976 Filed 8–5–11; 8:45 am]

BILLING CODE 4160–01–P

DEPARTMENT OF HEALTH AND HUMAN SERVICES

Food and Drug Administration

[Docket No. FDA–2011–N–0557]

Advancing Regulatory Science for Highly Multiplexed Microbiology/ Medical Countermeasure Devices; Public Meeting

AGENCY: Food and Drug Administration, HHS.

ACTION: Notice of public meeting; request for comments.

The Food and Drug Administration (FDA) is announcing the following public meeting: ''Advancing Regulatory Science for Highly Multiplexed Microbiology/Medical Countermeasure Devices.'' The purpose of the public meeting is to discuss performance evaluation of highly multiplexed microbiology/medical countermeasure (MCM) devices, their clinical application and public health/clinical needs, and quality criteria for establishing the accuracy of reference databases. These considerations are essential to establish the safety and effectiveness of highly multiplexed devices when used for the clinical diagnosis of infectious diseases from a human specimen.

Date and Time: The public meeting will be held on October 13, 2011, from 8 a.m. to 6 p.m.

Location: The public meeting will be held at the FDA White Oak Campus, 10903 New Hampshire Ave., Bldg. 31,

rm. 1503 (the Great Room), Silver Spring, MD 20993–0002. For parking and security information, please visit the following Web site: *http://www.fda.gov/AboutFDA/WorkingatFDA/BuildingsandFacilities/WhiteOakCampusInformation/ucm241740.htm.* The public meeting will also be available to be viewed online via webcast.

Contact Person: Raquel Peat, Center for Devices and Radiological Health, Food and Drug Administration, 10903 New Hampshire Ave., Bldg. 66, rm. 5561, Silver Spring, MD 20993–0002, 301–796–6218, e-mail: *raquel.peat@fda.hhs.gov.*

Registration and Requests for Oral Presentations: If you wish to attend or view the webcast of the public meeting, you must register online at *http://www.fda.gov/MedicalDevices/NewsEvents/WorkshopsConferences/default.htm* (select the appropriate meeting from the list).

Provide complete contact information for each attendee, including name, title, affiliation, email, and telephone number. Registration requests should be received by September 13, 2011.

If you wish to make an oral presentation during the open comment session at the meeting, you must indicate this at the time of registration. FDA has included general discussion topics for comment in section III of this document, Topics for Input. You should also identify which discussion topic you wish to address in your presentation. FDA will do its best to accommodate requests to speak. Individuals and organizations with common interests are urged to consolidate or coordinate their presentations and to request time for a joint presentation. FDA will determine the amount of time allotted to each presenter and the approximate time that each oral presentation is scheduled to begin. If the number of registrants requesting to speak is greater than what can be reasonably accommodated during the scheduled open public hearing session, FDA may conduct a lottery to determine the speakers for the scheduled open comment session.

Registration is free and will be on a first-come, first-served basis. Early registration is recommended because seating is limited. FDA may limit the number of participants from each organization based on space limitations. Registrants will receive confirmation once their registration has been accepted. Onsite registration on the day of the public meeting will be provided on a space-available basis beginning at 7 a.m. Non-U.S. citizens are subject to additional security screening, and they should register as soon as possible.

If you need special accommodations due to a disability, please contact Susan Monahan, Center for Devices and Radiological Health, Food and Drug Administration, 10903 New Hampshire Ave., Bldg. 66, Rm. 4321, Silver Spring, MD 20993–0002, 301–796–5661, e-mail: *susan.monahan@fda.hhs.gov* at least 7 days in advance of the meeting.

Streaming Webcast of the Public Meeting: There will be a registration process for the webcast, and it will be on a first-come, first-served basis (maximum capacity: 900). If you have never attended a Connect Pro meeting before, test your connection at: *https://collaboration.fda.gov/common/help/en/support/meeting_test.htm.* To get a quick overview of the Connect Pro program, visit: *http://www.adobe.com/go/connectpro_overview.* (FDA has verified the Web site addresses in this document, but FDA is not responsible for any subsequent changes to the Web sites after this document publishes in the **Federal Register.**)

Comments: In advance of the meeting, FDA will place its proposed evaluation approach to assess the performance of highly multiplexed microbiology/MCM devices on file in the public docket (docket number found in brackets in the heading of this document) and will post it at *http://www.fda.gov/MedicalDevices/NewsEvents/WorkshopsConferences/default.htm.* The deadline for submitting comments to be presented at this public meeting is September 13, 2011 (see section III of this document.)

Regardless of attendance at the public meeting, interested persons may submit either electronic or written comments on any discussion topic(s) to the open docket. The deadline for submitting comments to the docket is September 13, 2011. Submit electronic comments to *http://www.regulations.gov.* Submit written comments to the Division of Dockets Management (HFA–305), Food and Drug Administration, 5630 Fishers Lane, rm. 1061, Rockville, MD 20852. It is only necessary to send one set of comments. It is no longer necessary to send two copies of mailed comments. Identify comments with the docket number found in brackets in the heading of this document. In addition, if responding to specific topics as outlined in section III of this document, please identify the topic you are addressing. Received comments may be seen in the Division of Dockets Management between 9 a.m. and 4 p.m., Monday through Friday.

SUPPLEMENTARY INFORMATION:

I. Background

Highly multiplexed devices for the diagnosis of infectious diseases, including those caused by MCM-related pathogens, are a new generation of diagnostic products designed to simultaneously identify and differentiate a large number of pathogens from a single clinical specimen. This involves the testing of multiple targets through a common process of sample preparation, amplification and/or detection, and result interpretation. The identification of the organism is often based on sequence information compared to reference databases created either by the device manufacturer or otherwise publicly available.

These diagnostic devices present several advantages, such as identifying potential disease etiology in situations where many different pathogens share a common clinical manifestation and the simultaneous detection of co-infections. However, establishing and validating the performance of these devices to make informed clinical and public health decisions poses significant scientific challenges. This public meeting is to discuss the performance evaluation of highly multiplexed microbiology/MCM device, their clinical application and public health/clinical needs and quality criteria for establishing the accuracy of reference databases. These considerations are essential to establish the safety and effectiveness of highly multiplexed devices when used for the clinical diagnosis of infectious diseases from a human specimen.

FDA is holding this public meeting to obtain input from academia, government, industry, clinical laboratories, and other stakeholders on the performance evaluation approach to be proposed by FDA, which includes validation methods, reference panels, and bioinformatic concepts needed to address the clinical and analytical performance requirements for highly multiplexed microbiology/MCM devices. The ultimate goal is to advance regulatory science for highly multiplexed devices used in pathogen detection in order to ensure their safety and effectiveness and thereby provide potential clinical and public health benefits.

II. Meeting Overview

The public meeting will consist of presentations providing background on current and anticipated uses for highly multiplexed microbiology devices that may contain MCM analytes, the performance evaluation approach

proposed by FDA, and information on reference databases; an open public comment session; and an open discussion on selected topics raised by the presentations (see section III of this document.) During the discussions, the participants will not be asked to develop consensus opinions but rather to provide their individual perspectives.

Additional information, including a meeting agenda, will be available on the Internet, immediately after publication of this document in the **Federal Register**. The evaluation approach proposed by FDA is expected to be available at a later date. This information will be placed on file in the public docket (docket number found in brackets in the heading of this document), which is available at *http://www.regulations.gov.* This information will also be available at *http://www.fda.gov/MedicalDevices/NewsEvents/WorkshopsConferences/default.htm* (select the appropriate meeting from the list).

III. Topics for Input

FDA will seek input on its proposed performance evaluation approach, which will include the following topics:

1. *Clinical Application of Highly Multiplexed Microbiology Devices:* Their clinical application and public health/clinical needs; inclusion of MCM-related pathogens that are expected to be rarely present in the tested specimens; the composition of clinically relevant panels of pathogens; the interpretation of the test results taking into consideration the possible detection of microorganisms that are not clinically relevant, and what is known and unknown about co-infections.

2. *Device Evaluation:* How to evaluate the analytical and clinical performance of highly multiplexed microbiology devices; approaches to device validation when positive specimens are not easily available, which is the case for many MCM pathogens; sufficiency, feasibility, and practicality of the proposed FDA evaluation approach to establish device performance.

3. *Reference Databases:* Quality criteria for establishing the accuracy of reference databases; methods for curating, maintaining, and updating these databases; what is the current practice for creating and maintaining reference databases.

IV. Transcripts

Please be advised that as soon as a transcript is available, it will be accessible at *http://www.regulations.gov.* It may be viewed at the Division of Dockets Management (HFA–305), Food and Drug Administration, 5630 Fishers Lane, rm. 1061, Rockville, MD 20852. A transcript will also be available in either hardcopy or on CD–ROM, after submission of a Freedom of Information request. Written requests are to be sent to Division of Freedom of Information (ELEM–1029), Food and Drug Administration, 12420 Parklawn Dr., Element Bldg., rm. 1050, Rockville, MD 20857.

Dated: August 2, 2011.

Nancy K. Stade,

Deputy Director for Policy, Center for Devices and Radiological Health.

[FR Doc. 2011–19996 Filed 8–5–11; 8:45 am]

BILLING CODE 4160–01–P

DEPARTMENT OF HEALTH AND HUMAN SERVICES

Health Resources and Services Administration

Agency Information Collection Activities: Proposed Collection: Comment Request

In compliance with the requirement for opportunity for public comment on proposed data collection projects (section 3506(c)(2)(A) of Title 44, United States Code, as amended by the Paperwork Reduction Act of 1995, Pub. L. 104–13), the Health Resources and Services Administration (HRSA) publishes periodic summaries of proposed projects being developed for submission to the Office of Management and Budget (OMB) under the Paperwork Reduction Act of 1995. To request more information on the proposed project or to obtain a copy of the data collection plans and draft instruments, e-mail *paperwork@hrsa.gov* or call the HRSA Reports Clearance Officer at (301) 443–1129.

Comments are invited on: (a) Whether the proposed collection of information is necessary for the proper performance of the functions of the agency; (b) the accuracy of the agency's estimate of the burden of the proposed collection of information; (c) ways to enhance the quality, utility, and clarity of the information to be collected; and (d) ways to minimize the burden of the collection of information on respondents, including through the use of automated collection techniques or other forms of information technology.

Proposed Project: National Health Service Corps Site Application (OMB No. 0915–0230)—Revision

The National Health Service Corps (NHSC) of the Bureau of Clinician Recruitment and Service (BCRS), Health Resources and Services Administration, is committed to improving the health of the Nation's underserved by uniting communities in need with caring health professionals, and by supporting their efforts to build better systems of care. The NHSC Site Application, which renames and revises the previous Recruitment and Retention Assistance Application, requests information on the clinical service site, sponsoring agency, recruitment contact, staffing levels, service users, charges for services, employment policies, and fiscal management capabilities. Assistance in completing the application may be obtained through the appropriate State Primary Care Offices, State Primary Care Associations and the NHSC. The information on the application is used for determining the eligibility of sites for assignment of NHSC-obligated health professionals and to verify the need for NHSC clinicians. Approval as an NHSC service site is good for 3 years; sites wishing to remain eligible for assignment of NHSC providers must submit a new Site Application every 3 years.

The annual estimate of burden is as follows:

Instrument	Number of respondents	Responses per respondent	Total responses	Hours per response	Total burden hours
NHSC Site Application	3000	1	3000	0.5	1500

E-mail comments to *paperwork@hrsa.gov* or mail to the HRSA Reports Clearance Officer, Room 10–33, Parklawn Building, 5600 Fishers Lane, Rockville, MD 20857. Written comments should be received within 30 days of this notice.

Dated: August 2, 2011.

Reva Harris,

Acting Director, Division of Policy and Information Coordination.

[FR Doc. 2011–20077 Filed 8–5–11; 8:45 am]

BILLING CODE 4165–15–P

DEPARTMENT OF HEALTH AND HUMAN SERVICES

Health Resources and Services Administration

Agency Information Collection Activities: Proposed Collection: Comment Request

In compliance with the requirement for opportunity for public comment on proposed data collection projects (section 3506(c)(2)(A) of Title 44, United States Code, as amended by the Paperwork Reduction Act of 1995, Pub. L. 104–13), the Health Resources and Services Administration (HRSA) publishes periodic summaries of proposed projects being developed for submission to the Office of Management and Budget (OMB) under the Paperwork Reduction Act of 1995. To request more information on the proposed project or to obtain a copy of the data collection plans and draft instruments, e-mail *paperwork@hrsa.gov* or call the HRSA Reports Clearance Officer at (301) 443–1129.

Comments are invited on: (a) The proposed collection of information for the proper performance of the functions of the Agency; (b) the accuracy of the Agency's estimate of the burden of the proposed collection of information; (c) ways to enhance the quality, utility, and clarity of the information to be collected; and (d) ways to minimize the burden of the collection of information on respondents, including through the use of automated collection techniques or other forms of information technology.

Proposed Project: National Sample Survey of Nurse Practitioners (OMB No. 0915–xxxx)–[NEW]

The number of Nurse Practitioners (NP) in the United States has been growing rapidly over the past decade and continued growth is expected as the annual number of graduates of NP programs is at an all time high. Furthermore, over the past 20 years, many regulatory and financial barriers to using NPs have been removed. The expansion of health insurance under the Patient Protection and Affordable Care Act of 2010 (Pub. L. 111–148) will also increase the demand for services. With increasing numbers, NPs are poised to play a critical role in the nation's efforts to expand access to health care services.

Despite the increasing number and role of NPs, unfortunately, there is currently only limited, inconsistent data available to policy makers and the health care community. Accordingly, it is difficult for these leaders to quantify or fully understand the role of NPs in the current or future health care system. In fact, it is difficult to project with confidence the number of NPs practicing in the United States today.

The primary purpose of the Bureau of Health Professions' National Sample Survey of Nurse Practitioners data collection is to: (1) Improve estimates of NPs providing services; (2) describe the settings where NPs are working; (3) identify the positions/roles in which NPs are working; (4) describe the activities and services NPs are providing in the healthcare workforce; (5) determine the specialties in which NPs are working; (6) explore NPs' satisfaction with and perception of the extent to which they are working to their full scope of practice; and (7) assess variations in practice settings, positions, and practice patterns by demographic and educational characteristics.

The statutory provision that authorizes this data collection is section 761 of the Public Health Service Act, ''Health Professions Workforce Information and Analysis,'' which is codified at 42 U.S.C. 294n. The information obtained from this survey will ultimately lead to more accurate and complete national estimates of the current NP supply, as well as assist in the development of more accurate supply and demand projections for NPs. This, in turn, is likely to influence decisions regarding both the educational capacity and the number of NP programs at the national level.

The annual estimate of burden is as follows:

Instrument	Number of respondents	Responses per respondent	Total responses	Hours per response	Total burden hours
National Sample Survey of Nurse Practitioners	10,000	1	10,000	.33	3,300
Total	10,000		10,000		3,300

E-mail comments to *paperwork@hrsa.gov* or mail the HRSA Reports Clearance Officer, Room 10–33, Parklawn Building, 5600 Fishers Lane, Rockville, MD 20857. Written comments should be received within 60 days of this notice.

Dated: August 2, 2011.

Reva Harris,

Acting Director, Division of Policy and Information Coordination.

[FR Doc. 2011–20000 Filed 8–5–11; 8:45 am]

BILLING CODE 4165–15–P

DEPARTMENT OF HEALTH AND HUMAN SERVICES

National Institutes of Health

Prospective Grant of Exclusive License: Use of PKM2 Activators for the Treatment of Cancer

AGENCY: National Institutes of Health, Public Health Service, HHS.

ACTION: Notice.

SUMMARY: This is notice, in accordance with 35 U.S.C. 209(c)(1) and 37 CFR 404.7(a)(1)(i), that the National Institutes of Health, Department of Health and Human Services, is contemplating the grant of an exclusive patent license to practice the inventions embodied in U.S. Provisional Patent Application No. 61/104,091, entitled ''Activators of Human Pyruvate Kinase,'' filed October 9, 2008, now abandoned [HHS Ref. No. E–326–2008/0–US–01]; PCT/US2009/60237 Application entitled ''Small Molecule Activators of Pyruvate Kinase,'' filed October 9, 2009, now abandoned [HHS Ref. No. E–326–2008/0–PCT–02]; EP Application No. 09740795.1, entitled ''Small Molecule Activators of Pyruvate Kinase,'' filed October 9, 2009 [HHS Ref. No. E–326–2008/0–EP–05]; U.S. Non-Provisional Application No. 13/123,297, entitled

''Small Molecule Activators of Pyruvate Kinase,'' filed April 8, 2011 [HHS Ref. No. E–326–2008/0–US–07]; Australian National Application No. 2009303335, entitled ''Small Molecule Activators of Pyruvate Kinase,'' filed October 9, 2010 [HHS Ref. No. E–326–2008/0–AU–03]; Canadian National Application, entitled ''Small Molecule Activators of Pyruvate Kinase,'' filing date pending [HHS Ref. No. E–326–2008/0–CA–04]; Japanese National Application, entitled ''Small Molecule Activators of Pyruvate Kinase,'' filing date pending [HHS Ref. No. E–326–2008/0–JP–06]; U.S. Provisional Patent Application No. 61/329,158, entitled ''Pyruvate Kinase M2 Activators for the Treatment of Cancer,'' filed April 29, 2010, now abandoned [HHS Ref. No. E–120–2010/0–US–01]; and PCT Application PCT/US2011/033852 entitled ''Pyruvate Kinase M2 Activators for the Treatment of Cancer,'' filed April 26, 2011 [HHS Ref. No. E–120–2010/0–PCT–02] to Forma Therapeutics, Inc., having an office at 790 Memorial Drive, Cambridge, MA 02139. The patent rights in these inventions have been assigned to the United States of America.

The prospective exclusive license territory may be worldwide, and the field of use may be limited to the use of PKM2 activators as human therapeutics for the treatment of cancer.

DATES: Only written comments and/or applications for a license which are received by the NIH Office of Technology Transfer on or before September 7, 2011 will be considered.

ADDRESSES: Requests for copies of the patent application, inquiries, comments, and other materials relating to the contemplated exclusive license should be directed to: Steven Standley, PhD, Licensing and Patenting Manager, Office of Technology Transfer, National Institutes of Health, 6011 Executive Boulevard, Suite 325, Rockville, MD 20852–3804; Telephone: (301) 435–4074; Facsimile: (301) 402–0220; E-mail: *sstand@od.nih.gov.*

SUPPLEMENTARY INFORMATION: The fetal form of Pyruvate Kinase, called PKM2, is expressed in all cancer cells and imparts an important metabolic change on cancer cells which allows them to grow and divide rapidly. That is, PKM2 is normally inactive, which allows cancer cells to create an abundance of molecules for cellular growth and division. The products and methods sought in the prospective license activate PKM2 and result in inhibition of tumor development.

This invention relates to products and methods of administering PKM2 activators of various types and methods of treating cancer and diseases susceptible to PKM2 activators.

The prospective exclusive license will be royalty bearing and will comply with the terms and conditions of 35 U.S.C. 209 and 37 CFR 404.7. The prospective exclusive license may be granted unless within thirty (30) days from the date of this published notice, the NIH receives written evidence and argument that establishes that the grant of the license would not be consistent with the requirements of 35 U.S.C. 209 and 37 CFR 404.7.

Applications for a license in the field of use filed in response to this notice will be treated as objections to the grant of the contemplated exclusive license. Comments and objections submitted to this notice will not be made available for public inspection and, to the extent permitted by law, will not be released under the Freedom of Information Act, 5 U.S.C. 552.

Dated: August 2, 2011.

Richard U. Rodriguez,

Director, Division of Technology Development & Transfer, Office of Technology Transfer, National Institutes of Health.

[FR Doc. 2011–20003 Filed 8–5–11; 8:45 am]

BILLING CODE 4140–01–P

DEPARTMENT OF HEALTH AND HUMAN SERVICES

Substance Abuse and Mental Health Services Administration

Fiscal Year (FY) 2011 Funding Opportunity

AGENCY: Substance Abuse and Mental Health Services Administration, HHS.

ACTION: Notice of intent to award a Single Source Grant to the Health Service Center, Inc., Anniston, AL.

SUMMARY: This notice is to inform the public that the Substance Abuse and Mental Health Services Administration (SAMHSA) intends to award approximately $300,000 (total costs) per year for up to four years to the Health Service Center, Inc., Anniston, AL. This is not a formal request for applications. Assistance will be provided only to the Health Service Center, Inc., Anniston, AL, based on the receipt of a satisfactory application that is approved by an independent review group.

Funding Opportunity Title: SP–11–005.

Catalog of Federal Domestic Assistance (CFDA) Number: 93.243

Authority: Section 516 of the Public Health Service Act, as amended.

Justification: Only the Health Service Center, Inc., Anniston, AL, is eligible to apply. The Substance Abuse and Mental Health Services Administration (SAMHSA), Center for Substance Abuse Prevention (CSAP) is seeking to award a single source grant to the Health Service Center, Inc., Anniston, AL, for the Capacity Building Initiative (CBI). CBI is one of CSAP's Minority AIDS Initiative (MAI) programs. The purpose of the MAI is to provide substance abuse and HIV prevention services to at-risk minority populations in communities disproportionately affected by HIV/AIDS. The purpose of the CBI program is to support an array of activities to assist grantees in building a solid foundation for delivering and sustaining quality and accessible state of the science substance abuse and HIV prevention services. Specifically, the program aims to engage colleges, universities and community-level domestic public and private non-profit entities to prevent and reduce the onset of SA and transmission of HIV/AIDS among at-risk racial/ethnic minority young adults, ages 18–24.

The Health Service Center, Inc., Anniston, AL, was funded under the SP–10–004 CBI Initiative in FY 2010. At that time, the Health Services Center, Inc. proposed a 5-year program in their grant application, but inadvertently requested one year of funding rather than the full program funding period of 5 years. It was clear from language in the original application (which specifically referred to individual years of the program, and numbers served throughout the project) that the grantee intended to apply for funding for the full five years. The purpose of this sole source award is to fund the 4 out years of the 5 year cooperative agreement awarded under the initial announcement. SAMHSA will not accept an application from any other entity.

FOR FURTHER INFORMATION CONTACT: Shelly Hara, Substance Abuse and Mental Health Services Administration, 1 Choke Cherry Road, Room 8–1095, Rockville, MD 20857; *telephone:* (240) 276–2321; *E-mail: shelly.hara@samhsa.hhs.gov*.

Cathy Friedman,

Public Health Analyst, SAMHSA .

[FR Doc. 2011–19965 Filed 8–5–11; 8:45 am]

BILLING CODE 4162–20–P

DEPARTMENT OF THE INTERIOR

Fish and Wildlife Service

[FWS–R9–FHC–2011–N157; 94300–1122–0000–Z2]

Wind Turbine Guidelines Advisory Committee; Announcement of Public Teleconference and Webcast

AGENCY: Fish and Wildlife Service, Interior.

ACTION: Notice of public teleconference and webcast.

SUMMARY: We, the U.S. Fish and Wildlife Service (Service), will host a Wind Turbine Guidelines Advisory Committee (Committee) meeting via teleconference and webcast. This meeting is open to the public, but registration is required.

DATES:

Meeting: The meeting will take place on August 23, from 1 to 5 p.m. Eastern Time.

Pre-meeting Public Registration: If you are a member of the public wishing to participate in the meeting via telephone or webcast, you must register online by August 16, 2011 (see ''Meeting Participation Information'' in **SUPPLEMENTARY INFORMATION**).

FOR FURTHER INFORMATION CONTACT: Rachel London, Division of Habitat and Resource Conservation, U.S. Fish and Wildlife Service, Department of the Interior, (703) 358–2161.

SUPPLEMENTARY INFORMATION: We will host a Committee meeting via teleconference and webcast on August 23, 2011. This meeting is open to the public. Registration is required.

Agenda

The meeting agenda will include reports to the full Committee from Subcommittees on:

Adaptive Management and Mitigation;
Definition of ''significant'';
Phase-In of Guidelines;
Habitat Fragmentation;
Table 1: Tier 4 Monitoring;
Avian and Bat Protection Plans; and
Role of the Service.

Background

On March 13, 2007, the Department of the Interior published a notice of establishment of the Committee in the **Federal Register** (72 FR 11373). The Committee's purpose is to provide advice and recommendations to the Secretary of the Interior (Secretary) on developing effective measures to avoid or minimize impacts to wildlife and their habitats related to land-based wind energy facilities. All Committee members serve without compensation. In accordance with the Federal Advisory Committee Act (5 U.S.C. App.), a copy of the Committee's charter is filed with the Committee Management Secretariat, General Services Administration; Committee on Environment and Public Works, U.S. Senate; Committee on Natural Resources, U.S. House of Representatives; and the Library of Congress. The Secretary appointed 22 individuals to the Committee on October 24, 2007, representing the varied interests associated with wind energy development and its potential impacts to wildlife species and their habitats. The Committee provided recommendations to the Secretary on March 4, 2010.

Meeting Participation Information

This meeting is open to the public. Members of the public planning to participate via teleconference and webcast must register at *http://www.fws.gov/windenergy* by close of business, August 16, 2011. Registrants will be provided with instructions for participation via e-mail.

Dated: August 3, 2011.

Rachel London,

Wind Turbine Guidelines Advisory Committee Alternate Designated Federal Officer.

[FR Doc. 2011–19972 Filed 8–5–11; 8:45 am]

BILLING CODE 4310–55–P

DEPARTMENT OF THE INTERIOR

Bureau of Land Management

[LLCO956000.L14200000 BJ0000]

Notice of Stay of Filing of Plat; Colorado

AGENCY: Bureau of Land Management, Interior.

ACTION: Notice.

SUMMARY: On Friday, February 18, 2011, the Bureau of Land Management, (BLM) published a Notice of Stay of Filing of Plat; Colorado in the **Federal Register** (76 FR 9596) declaring the intent to file certain plats on July 31, 2011. The BLM Colorado State Office is publishing this notice to inform the public that the proposed filing of the plat and field notes of the dependent resurvey and surveys in Township 9 South, Range 93 West, Sixth Principal Meridian, Colorado accepted on August 5, 2010, is hereby postponed in order to extend the period of time for interested parties to communicate with the BLM regarding this proposed filing and to extend the period of time for interested parties to protest this action.

DATES: Unless there are protests of this action, the filing of the plat described in this notice will happen on September 30, 2011.

ADDRESSES: BLM Colorado State Office, Cadastral Survey, 2850 Youngfield Street, Lakewood, Colorado 80215–7093.

FOR FURTHER INFORMATION CONTACT: Randy Bloom, Chief Cadastral Surveyor for Colorado, (303) 239–3856.

SUPPLEMENTARY INFORMATION: If a protest of this dependent resurvey is received prior to the date of the official filing, the official filing will be stayed pending consideration of the merits of the protest. This particular plat will not be officially filed until after all protests have been accepted or dismissed and become final.

Randy Bloom,

Chief Cadastral Surveyor for Colorado.

[FR Doc. 2011–20002 Filed 8–5–11; 8:45 am]

BILLING CODE 4310–JB–P

DEPARTMENT OF THE INTERIOR

Bureau of Land Management

[LLWO260000 L10600000 XQ0000]

Notice of Call for Nominations for the Wild Horse and Burro Advisory Board

AGENCY: Bureau of Land Management, Interior.

ACTION: Notice.

SUMMARY: The purpose of this notice is to solicit public nominations for three members to the Wild Horse and Burro Advisory Board (Board). The Board provides advice concerning management, protection, and control of wild free-roaming horses and burros on the public lands administered by the Department of the Interior, through the Bureau of Land Management (BLM), and the Department of Agriculture, through the Forest Service.

DATES: Nominations should be submitted to the address listed below no later than September 22, 2011.

ADDRESSES: All mail sent via the U.S. Postal Service should be sent as follows: National Wild Horse and Burro Program, U.S. Department of Interior, Bureau of Land Management, 1849 C Street, NW., Room 2134LM, *Attn:* Sharon Kipping, Washington, DC 20240. All mail and packages that are sent via FedEx or UPS should be addressed as follows: National Wild Horse and Burro Program, U.S. Department of Interior, Bureau of Land Management, 20 M

Street, SE., Room 2134LM, Attn: Sharon Kipping, Washington, DC 20003. You may also send a fax to Ms. Kipping at 202–912–7182, or e-mail her at *skipping@blm.gov.*

FOR FURTHER INFORMATION CONTACT: Sharon Kipping, Wild Horse and Burro Program Specialist at 202–912–7263. Persons who use a telecommunications device for the deaf (TDD) may call the Federal Information Relay Service (FIRS) at 1–800–877–8339 to contact the above individual during normal business hours. The FIRS is available 24 hours a day, 7 days a week, to leave a message or question with the above individual. You will receive a reply during normal business hours.

SUPPLEMENTARY INFORMATION: Members of the Council serve without compensation. However, while away from their homes or regular places of business, Council and subcommittee members engaged in Council or subcommittee business, approved by the Designated Federal Official, may be allowed travel expenses, including per diem in lieu of subsistence, in the same manner as persons employed intermittently in Government service under Section 5703 of Title 5 of the United States Code. Nominations for a term of 3 years are needed to represent the following categories of interest:

Wild horse and burro advocacy groups;

Veterinary medicine (equine science); and

General public interest (with special knowledge of wild horses and burros, wildlife, animal husbandry, or natural resource management).

Individuals may nominate themselves or others. Any individual or organization may nominate one or more persons to serve on the Board. The following information must accompany all nominations for the individual to be considered for a position. Nominations will not be accepted without a complete resume of the nominee, including the following:

1. *Which positions the nominee wishes to be considered for;*
2. *Nominee's First, Middle and Last Name;*
3. *Business Address and Phone;*
4. *Home Address and Phone;*
5. *E-mail Address;*
6. *Present Occupation/Title;*
7. *Education:* (colleges, degrees, major field of study);
8. *Career Highlights:* Significant related experience, civic and professional activities, elected or appointed offices (included prior advisory committee experience or career achievements related to the interest to be represented). Attach additional pages, as necessary;
9. *Qualifications:* Education, training and experience that qualify you to serve on the Board;
10. *Experience or knowledge of wild horse and burro management and the issues facing the BLM;*
11. *Experience or knowledge of horses or burros:* (equine health, training and management);
12. *Experience in working with disparate groups to achieve collaborative solutions:* (civic organizations, planning commissions, school boards);
13. *Indicate any BLM permits, leases or licenses that you or your employer hold (or state Not Applicable); and*
14. *Indicate whether or not you are a federally registered lobbyist.*

—Attach or have letters of references sent from special interests or organizations you may represent. Also letters of endorsement from business associates; friends; co-workers; local, State, and/or Federal government representatives; or members of Congress along with any other information that speaks to the nominee's qualifications.

Simultaneously with this notice, the BLM state offices will issue press releases providing information for submitting nominations.

As appropriate, certain Board members may be appointed as Special Government Employees. Special Government Employees serve on the board without compensation, and are subject to financial disclosure requirements in the Ethics in Government Act and 5 CFR part 2634. Nominations are to be sent to the address listed under **ADDRESSES** above.

Privacy Act Statement: The authority to request this information is contained in 5 U.S.C. 301, the Federal Advisory Committee Act, and Part 1784 of Title 43, Code of Federal Regulations. It is used by the appointment officer to determine education, training, and experience related to possible service on an Advisory Council of the Bureau of Land Management. If you are appointed as an advisor, the information will be retained by the appointing official for as long as you serve. Otherwise, it will be destroyed 2 years after termination of your membership or returned (if requested) following announcement of the Council appointments. Completion of this form is voluntary. However, failure to complete any or all items will inhibit fair evaluation of your qualifications, and could result in you not receiving full consideration for appointment.

Each nominee will be considered for selection according to his or her ability to represent his or her designated constituency, analyze and interpret data and information, evaluate programs, identify problems, work collaboratively in seeking solutions, and formulate and recommend corrective actions.

The Obama Administration prohibits individuals who are currently federally registered lobbyists to serve on all Federal Advisory Committee Act (FACA) and non-FACA boards, committees or councils. Pursuant to Section 7 of the Wild Free-Roaming Horses and Burros Act, members of the Board cannot be employed by either Federal or State governments. The Board will meet no less than two times annually. The BLM Director may call additional meetings in connection with special needs for advice.

Certification Statement: I hereby certify that the National Wild Horse and Burro Advisory Board is necessary and in the public interest in connection with the Secretary's responsibilities to manage the lands, resources, and facilities administered by the BLM.

Edwin L. Roberson,

Assistant Director, Renewable Resources and Planning.

[FR Doc. 2011–19998 Filed 8–5–11; 8:45 am]

BILLING CODE 4310–84–P

DEPARTMENT OF THE INTERIOR

National Park Service

[2253–665]

Notice of Intent To Repatriate a Cultural Item: California Department of Parks and Recreation, Sacramento, CA

AGENCY: National Park Service, Interior.

ACTION: Notice.

SUMMARY: The California Department of Parks and Recreation, in consultation with the appropriate Indian tribes, has determined that an item meets the definition of unassociated funerary object and repatriation to the Indian tribes stated below may occur if no additional claimants come forward. Representatives of any Indian tribe that believes itself to be culturally affiliated with the unassociated funerary object may contact the California Department of Parks and Recreation.

DATES: Representatives of any Indian tribe that believes it has a cultural affiliation with the unassociated funerary object should contact the California Department of Parks and Recreation at the address below by September 7, 2011.

ADDRESSES: Rebecca Carruthers, NAGPRA Coordinator, California Department of Parks and Recreation, 1416 9th St., Room 902, Sacramento, CA 95814, telephone (916) 215–5018.

SUPPLEMENTARY INFORMATION: Notice is here given in accordance with the Native American Graves Protection and Repatriation Act (NAGPRA), 25 U.S.C. 3005, of the intent to repatriate a cultural item in the possession of the California Department of Parks and Recreation, Sacramento, CA, that meets the definition of unassociated funerary object under 25 U.S.C. 3001.

This notice is published as part of the National Park Service's administrative responsibilities under NAGPRA, 25 U.S.C. 3003(d)(3). The determinations in this notice are the sole responsibility of the museum, institution, or Federal agency that has control of the Native American cultural item. The National Park Service is not responsible for the determinations in this notice.

History and Description of the Cultural Item

At an unknown date, a cremation, representing one individual, and one stone bead were likely removed from Site CA–SAC–16, also known as the Bennett Mound, Sacramento County, CA. Subsequently, they became part of the collection at the California Department of Parks and Recreation. There is no specific excavation or donor information listed. However, a 1986 inventory of the CA–SAC–16 objects has a tag that reads: ''Remains of cremation burial from Bennett Mound, Sacramento Valley.'' Based on this record, it is reasonably believed that the cremation and object were removed from Site CA–SAC–16. Currently, the cremated individual is missing from the collection. Therefore, the stone bead now meets the definition of an unassociated funerary object.

Site CA–SAC–16 has been excavated numerous times. The first documented excavation was by Anthony Zallio in 1923. In 1926 to 1927, Benjamin W. Hathaway excavated the site. Sacramento Junior College excavated from July to November 1933, and again in 1936 to 1937. Later excavations were conducted by Sacramento State College in 1953. Between 1966 and 1971, the American River College excavated under the direction of Charles Gebhardt.

Site CA–SAC–16 was occupied from the Middle Horizon (circa 1000 B.C.) to historic contact. Archeologists believe that the Penutian-speaking Maidu and Miwok are descended from what have been identified as the Windmiller people who occupied the Central Valley of California from 3,000 to 4,000 years ago. No lineal descendant has been identified. Geographic affiliation is consistent with the historically documented use of the area by the Nisenan (Southern Maidu) and the Plains Miwok. The determination that this collection could be affiliated with either the historic Nisenan or the Plains Miwok is based on the movement of both groups near the borders of what is now identified as their historic territories.

Determinations Made by the California Department of Parks and Recreation

Officials of the California Department of Parks and Recreation have determined that:

- Pursuant to 25 U.S.C. 3001(3)(B) the one cultural item described above is reasonably believed to have been placed with or near individual human remains at the time of death or later as part of the death rite or ceremony and is believed, by a preponderance of the evidence, to have been removed from a specific burial site of a Native American individual.
- Pursuant to 25 U.S.C. 3001(2), there is a relationship of shared group identity that can be reasonably traced between the unassociated funerary object and the Buena Vista Rancheria of Me-Wuk Indians of California; Cortina Indian Rancheria of Wintun Indians of California; Ione Band of Miwok Indians of California; Shingle Springs Band of Miwok Indians, Shingle Springs Rancheria (Verona Tract), California; United Auburn Indian Community of the Auburn Rancheria of California; Wilton Rancheria, California; and Yocha Dehe Wintun Nation, California (hereinafter referred to as ''The Tribes'').

Additional Requestors and Disposition

Representatives of any Indian tribe that believes itself to be culturally affiliated with the unassociated funerary object should contact Rebecca Carruthers, NAGPRA Coordinator, California Department of Parks and Recreation, 1416 9th St., Room 902, Sacramento, CA 95814, telephone (916) 215–5018, before September 7, 2011. Repatriation of the unassociated funerary object to The Tribes may proceed after that date if no additional claimants come forward.

The California Department of Parks and Recreation is responsible for notifying The Tribes that this notice has been published.

Dated: August 2, 2011.

Sherry Hutt,

Manager, National NAGPRA Program.

[FR Doc. 2011–19994 Filed 8–5–11; 8:45 am]

BILLING CODE 4312–50–P

DEPARTMENT OF THE INTERIOR

National Park Service

[2253–665]

Notice of Inventory Completion: Fowler Museum at UCLA, Los Angeles, CA

AGENCY: National Park Service, Interior.

ACTION: Notice.

SUMMARY: The Fowler Museum at UCLA has completed an inventory of human remains, in consultation with the appropriate Indian tribes, and has determined that there is a cultural affiliation between the human remains and present-day Indian tribes. Representatives of any Indian tribe that believes itself to be culturally affiliated with the human remains may contact the Fowler Museum at UCLA. Repatriation of the human remains to the Indian tribes stated below may occur if no additional claimants come forward.

DATES: Representatives of any Indian tribe that believes it has a cultural affiliation with the human remains should contact the Fowler Museum at UCLA at the address below by September 7, 2011.

ADDRESSES: Wendy G. Teeter, Ph.D., Curator of Archaeology, Fowler Museum at UCLA, Box 951549, Los Angeles, CA 90095–1549, telephone (310) 825–1864.

SUPPLEMENTARY INFORMATION: Notice is here given in accordance with the Native American Graves Protection and Repatriation Act (NAGPRA), 25 U.S.C. 3003, of the completion of an inventory of human remains in the possession of the Fowler Museum at UCLA, Los Angeles, CA. The human remains were removed from Maricopa County, AZ.

This notice is published as part of the National Park Service's administrative responsibilities under NAGPRA, 25 U.S.C. 3003(d)(3). The determinations in this notice are the sole responsibility of the museum, institution, or Federal agency that has control of the cultural items. The National Park Service is not responsible for the determinations in this notice.

Consultation

A detailed assessment of the human remains was made by the Fowler Museum at UCLA professional staff in consultation with representatives of the Ak Chin Indian Community of the Maricopa (Ak Chin) Indian Reservation, Arizona; Gila River Indian Community of the Gila River Indian Reservation, Arizona; Hopi Tribe of Arizona; Salt River Pima-Maricopa Indian

Community of the Salt River Reservation, Arizona; Tohono O'odham Nation of Arizona; and the Zuni Tribe of the Zuni Reservation, New Mexico. The Salt River Pima-Maricopa Indian Community of the Salt River Reservation, Arizona, has submitted a repatriation claim for the individual described in this notice, on behalf of itself and the Ak Chin Indian Community of the Maricopa (Ak Chin) Indian Reservation, Arizona; Gila River Indian Community of the Gila River Indian Reservation, Arizona; and Tohono O'odham Nation of Arizona (hereinafter referred to as ''The Four Southern Tribes of Arizona'').

History and Description of the Remains

In 1940, a human remain representing a minimum of one individual was removed from the Van Liere Ranch Site, in Maricopa County, AZ, during excavations by J.W. Simmons. The collection was donated to the Fowler Museum at UCLA by Thomas Hinton in 1956. The human remain is an infant's tooth that was found in the collection. No known individual was identified. No associated funerary objects are present.

The Van Liere Ranch site was a burial ground with numerous Hohokam cremations and other features. This site is dated from A.D. 300–1500 based on the cultural materials found at the site, which are identified by archeologists and cultural experts as consistent with Hohokam culture. There are burial records that describe the excavation of each burial and include field and artifact photos, drawings, and site maps. Except for this individual, the human remains were not removed from the ground. Based on museum documentation and information during consultation, it is reasonable to believe this individual is Native American and of Hohokam ancestry.

The Four Southern Tribes of Arizona assert a ''close relationship of shared group identity that can be traced both historically and prehistorically between the Four Southern Tribes of Arizona and the people that inhabited the south central Arizona and the northern region of present day Mexico from time immemorial.'' Therefore, The Four Southern Tribes of Arizona claim cultural affiliation to this individual based on geographical, archeological, linguistic, oral tradition, and historical evidence.

The Hopi Tribe ''claims cultural and ancestral affiliation to all human remains, associated and unassociated funerary objects, sacred objects, and objects of cultural patrimony that were collected from Paleo-Indian, Archaic, Basketmaker, Hisatsinom (Anasazi), Mogollon, Hohokam, Sinaguan, Fremont, Mimbres, and Salado, prehistoric and historic cultures of the Southwest.''

Based on, ''Zuni oral teachings and tradition, ethnohistoric documentation, historic documentation, archaeological documentation, and other evidence, the Zuni Tribe claims cultural affiliation with prehistoric cultures of the Southwestern United States that include, and are known as, Paleo Indian, Archaic, Basketmaker, Puebloan, Freemont, Anasazi, Mogollon (including Mimbres and Jornada), Hohokam, Sinagua, Western Pueblo, and Salado.''

Therefore, the oral tradition, kinship system, and archeology all indicate that The Four Southern Tribes of Arizona, Hopi Tribe of Arizona, and the Zuni Tribe of the Zuni Reservation, New Mexico, identify with the archeological Hohokam tradition. Finally, multiple lines of evidence, including treaties, Acts of Congress, and Executive Orders, indicate that the land from which the Native American human remain was removed is the aboriginal land of The Four Southern Tribes of Arizona, Hopi Tribe of Arizona, and the Zuni Tribe of the Zuni Reservation, New Mexico.

Determinations Made by the Fowler Museum at UCLA

Officials of the Fowler Museum at UCLA have determined that:

- Pursuant to 25 U.S.C. 3001(9), the human remain described in this notice represent the physical remains of one individual of Native American ancestry.
- Pursuant to 25 U.S.C. 3001(2), there is a relationship of shared group identity that can be reasonably traced between the Native American human remain and The Four Southern Tribes of Arizona, Hopi Tribe of Arizona, and the Zuni Tribe of the Zuni Reservation, New Mexico.

Additional Requestors and Disposition

Representatives of any other Indian tribe that believes itself to be culturally affiliated with the human remain should contact Wendy G. Teeter, Ph.D., Curator of Archaeology, Fowler Museum at UCLA, Box 951549, Los Angeles, CA 90095–1549, telephone (310) 825–1864, before September 7, 2011. Repatriation of the human remain to the Salt River Pima-Maricopa Indian Community of the Salt River Reservation, Arizona, on behalf of The Four Southern Tribes of Arizona, may proceed after that date if no additional claimants come forward.

The Fowler Museum at UCLA is responsible for notifying The Four Southern Tribes of Arizona, Hopi Tribe of Arizona, and the Zuni Tribe of the Zuni Reservation, New Mexico, that this notice has been published.

Dated: August 2, 2011.

Sherry Hutt,

Manager, National NAGPRA Program.

[FR Doc. 2011–19988 Filed 8–5–11; 8:45 am]

BILLING CODE 4310–50–P

DEPARTMENT OF THE INTERIOR

National Park Service

[2253–665]

Notice of Inventory Completion: Washington State Department of Natural Resources, Olympia, WA, and University of Washington, Department of Anthropology, Seattle, WA

AGENCY: National Park Service, Interior.

ACTION: Notice.

SUMMARY: The Washington State Department of Natural Resources and the University of Washington, Department of Anthropology have completed an inventory of human remains and an associated funerary object, in consultation with the appropriate Indian tribes, and have determined that there is a cultural affiliation between the human remains and associated funerary object and present-day Indian tribes. Representatives of any Indian tribe that believes itself to be culturally affiliated with the human remains and associated funerary object may contact the Washington State Department of Natural Resources. Repatriation of the human remains and associated funerary object to the Indian tribe named below may occur if no additional claimants come forward.

DATES: Representatives of any Indian tribe that believes it has a cultural affiliation with the human remains and associated funerary object should contact the Washington State Department of Natural Resources at the address below by September 7, 2011.

ADDRESSES: Maurice Major, Cultural Resource Specialist, Washington State Department of Natural Resources, P.O. Box 47000, 1111 Washington St., SE., Olympia, WA 98504–7000, telephone (360) 902–1298.

SUPPLEMENTARY INFORMATION: Notice is here given in accordance with the Native American Graves Protection and Repatriation Act (NAGPRA), 25 U.S.C. 3003, of the completion of an inventory of human remains and an associated funerary object in the control of the Washington State Department of Natural Resources, Olympia, WA, and in the possession of the University of

Washington, Department of Anthropology, Seattle, WA. The human remains and associated funerary object were removed from Skagit County, WA.

This notice is published as part of the National Park Service's administrative responsibilities under NAGPRA, 25 U.S.C. 3003(d)(3). The determinations in this notice are the sole responsibility of the museum, institution, or Federal agency that has control of the Native American human remains and associated funerary objects. The National Park Service is not responsible for the determinations in this notice.

Consultation

A detailed assessment of the human remains was made by the University of Washington, Department of Anthropology and Burke Museum professional staff in consultation with representatives of the Lummi Tribe of the Lummi Reservation, Washington; Samish Indian Tribe, Washington; and the Swinomish Indians of the Swinomish Reservation, Washington (hereinafter referred to as ''The Tribes'').

History and Description of the Remains

In 1976, human remains representing a minimum of one individual were removed from Huckleberry Island, Skagit County, WA. This individual was determined to be consistent with Native American morphology, based on cranial deformation and wormian bone evidence. No known individual was identified. The one associated funerary is a bird bone.

This individual and associated funerary object were identified while preparing the transfer of other human remains that were described in published Notices of Inventory Completion (75 FR 14463, March 25, 2010; 76 FR 9051–9052, February 16, 2011). Those individuals have been repatriated.

Huckleberry Island is a small island located approximately ¼ mile southeast of Guemes Island, in Skagit County, WA. This area falls within the Central Coast Salish cultural group (Suttles 1990). Historical documentation indicates that the aboriginal Samish people traditionally occupied Guemes Island (Amoss 1978, Roberts 1975, Ruby and Brown 1986, Smith 1941, Suttles 1951, Swanton 1952) and Huckleberry Island (Barg 2008, unpublished report) both before and after European contact. The Treaty of Point Elliot, in 1855, stated that the Samish were to be relocated to the Lummi Reservation. Following the Treaty of Point Elliot, many Samish individuals relocated to either the Lummi Reservation or the Swinomish Reservation (Ruby and Brown 1986:179). Many Samish, however, also chose to remain in their old village sites. In 1996, the Samish Indian Tribe was re-recognized by the Federal Government.

Determinations Made by the Washington State Department of Natural Resources

Officials of the Washington State Department of Natural Resources have determined that:

- Based on anthropological and biological evidence, the human remains and associated funerary object have been determined to be Native American.
- Pursuant to 25 U.S.C. 3001(9), the human remains described above represent the physical remains of one individual of Native American ancestry.
- Pursuant to 25 U.S.C. 3001(3)(A), the one object described above is reasonably believed to have been placed with or near individual human remains at the time of death or later as part of the death rite or ceremony.
- Pursuant to 25 U.S.C. 3001(2), there is a relationship of shared group identity that can be reasonably traced between the Native American human remains and associated funerary object and The Tribes.

Additional Requestors and Disposition

Representatives of any other Indian tribe that believes itself to be culturally affiliated with the human remains and associated funerary object should contact Maurice Major, Cultural Resource Specialist, Washington State Department of Natural Resources, P.O. Box 47000, 1111 Washington St., SE., Olympia, WA 98504–7000, telephone (360) 902–1298, before September 7, 2011. Repatriation of the human remains and associated funerary object to the Samish Indian Tribe, Washington, may proceed after that date if no additional claimants come forward.

The University of Washington's Burke Museum is responsible for notifying The Tribes that this notice has been published.

Dated: August 2, 2011.

Sherry Hutt,

Manager, National NAGPRA Program.

[FR Doc. 2011–19993 Filed 8–5–11; 8:45 am]

BILLING CODE 4312–50–P

DEPARTMENT OF THE INTERIOR

National Park Service

[2253–665]

Notice of Inventory Completion: Longyear Museum of Anthropology, Colgate University, Hamilton, NY

AGENCY: National Park Service, Interior.

ACTION: Notice.

SUMMARY: The Longyear Museum of Anthropology has completed an inventory of a human remain, in consultation with the appropriate Indian tribes, and has determined that there is no cultural affiliation between the human remain and any present-day Indian tribe. Representatives of any Indian tribe that believes itself to be culturally affiliated with the human remain may contact the museum. Disposition of the human remain to the Indian tribes stated below may occur if no additional requestors come forward.

DATES: Representatives of any Indian tribe that believes it has a cultural affiliation with the human remain should contact the Longyear Museum of Anthropology at the address below by September 7, 2011.

ADDRESSES: Dr. Jordan Kerber, Longyear Museum of Anthropology, Department of Sociology and Anthropology, Colgate University, 13 Oak Dr., Hamilton, NY 13346, telephone (315) 228–7559.

SUPPLEMENTARY INFORMATION: Notice is here given in accordance with the Native American Graves Protection and Repatriation Act (NAGPRA), 25 U.S.C. 3003, of the completion of an inventory of a human remain in the possession of the Longyear Museum of Anthropology, Colgate University, Hamilton, NY. The human remain was removed from an unknown location in Arkansas.

This notice is published as part of the National Park Service's administrative responsibilities under NAGPRA, 25 U.S.C. 3003(d)(3) and 43 CFR 10.11(d). The determinations in this notice are the sole responsibility of the museum, institution, or Federal agency that has control of the Native American human remains. The National Park Service is not responsible for the determinations in this notice.

Consultation

A detailed assessment of the human remain was made by the Longyear Museum of Anthropology professional staff in consultation with representatives of the Osage Nation, Oklahoma, and the Quapaw Tribe of Indians, Oklahoma.

History and Description of the Remains

At an unknown date, a human remain—a single human distal phalanx or thumb tip—representing a minimum of one individual was removed from an unknown location in Arkansas. The bone is perforated at the proximal end and was acquired by the Longyear Museum of Anthropology between 1948 and 1979, and accessioned as part of the Howe Collection (Catalog number A234). The bone was subsequently assigned Index number 326 in the Colgate Collection database. No known individual was identified. No associated funerary objects are present.

The presence of other Native American artifacts in the Howe Collection at the Longyear Museum of Anthropology provides a reasonable basis for determining that the human remain belongs to a Native American individual.

Determinations Made by the Longyear Museum of Anthropology

Officials of the Longyear Museum of Anthropology have determined that:

- Pursuant to 25 U.S.C. 3001(2), a relationship of shared group identity cannot be reasonably traced between the Native American human remain and any present-day Indian tribe.
- According to final judgments of the Indian Claims Commission, the land from which the Native American human remain was removed is the aboriginal land of the Caddo Nation of Oklahoma; Osage Nation, Oklahoma; Quapaw Tribe of Indians, Oklahoma; and United Keetoowah Band of Cherokee Indians in Oklahoma.
- Other credible lines of evidence indicate that the land from which the Native American human remain was removed is the aboriginal land of the Caddo Nation of Oklahoma; Osage Nation, Oklahoma; Quapaw Tribe of Indians, Oklahoma; United Keetoowah Band of Cherokee Indians in Oklahoma; and Tunica-Biloxi Indian Tribe of Louisiana.
- Pursuant to 25 U.S.C. 3001(9), the human remain described in this notice represent the physical remains of one individual of Native American ancestry.
- Pursuant to 43 CFR 10.11(c)(1), the disposition of the human remain is to the Osage Nation, Oklahoma, and the Quapaw Tribe of Indians, Oklahoma.

Additional Requestors and Disposition

Representatives of any Indian tribe that believes itself to be culturally affiliated with the human remain or any other Indian tribe that believes it satisfies the criteria in 43 CFR 10.11(c)(1) should contact Dr. Jordan Kerber, Longyear Museum of Anthropology, Department of Sociology and Anthropology, Colgate University, 13 Oak Dr., Hamilton, NY 13346, telephone (315) 228–7559, before September 7, 2011. Disposition of the human remain to the Osage Nation, Oklahoma, and the Quapaw Tribe of Indians, Oklahoma, may proceed after that date if no additional requestors come forward.

The Longyear Museum of Anthropology is responsible for notifying the Caddo Nation of Oklahoma; Osage Nation, Oklahoma; Quapaw Tribe of Indians, Oklahoma; United Keetoowah Band of Cherokee Indians in Oklahoma; and Tunica-Biloxi Indian Tribe of Louisiana that this notice has been published.

Dated: August 2, 2011.

Sherry Hutt,

Manager, National NAGPRA Program.

[FR Doc. 2011–19989 Filed 8–5–11; 8:45 am]

BILLING CODE 4312–50–P

DEPARTMENT OF THE INTERIOR

National Park Service

[2253–665]

Notice of Inventory Completion: Slater Museum of Natural History, University of Puget Sound, Tacoma, WA

AGENCY: National Park Service, Interior.

ACTION: Notice.

SUMMARY: The Slater Museum of Natural History, University of Puget Sound has completed an inventory of a human remain, in consultation with the appropriate Indian tribes, and has determined that there is no cultural affiliation between the human remain and any present-day Indian tribe. Representatives of any Indian tribe that believes itself to be culturally affiliated with the human remain may contact the Slater Museum of Natural History, University of Puget Sound. Disposition of the human remain to the Indian tribes stated below may occur if no additional requestors come forward.

DATES: Representatives of any Indian tribe that believes it has a cultural affiliation with the human remain should contact the Slater Museum of Natural History, University of Puget Sound at the address below by September 7, 2011.

ADDRESSES: Peter Wimberger, Slater Museum of Natural History, University of Puget Sound, 1500 North Warner St., Tacoma, WA 98416–1088, telephone (253) 879–2784.

SUPPLEMENTARY INFORMATION: Notice is here given in accordance with the Native American Graves Protection and Repatriation Act (NAGPRA), 25 U.S.C. 3003, of the completion of an inventory of a human remain in the possession of the Slater Museum of Natural History, University of Puget Sound, Tacoma, WA. The human remain was likely removed from ''Columbia River, Wa.''.

This notice is published as part of the National Park Service's administrative responsibilities under NAGPRA, 25 U.S.C. 3003(d)(3) and 43 CFR 10.11(d). The determinations in this notice are the sole responsibility of the museum, institution, or Federal agency that has control of the Native American human remains. The National Park Service is not responsible for the determinations in this notice.

Consultation

A detailed assessment of the human remain was made by the Slater Museum of Natural History, University of Puget Sound professional staff in consultation with representatives of the Confederated Tribes and Bands of the Yakama Nation, Washington; Confederated Tribes of the Chehalis Reservation, Washington; Confederated Tribes of the Colville Reservation, Washington; Confederated Tribes of the Umatilla Indian Reservation, Oregon; Confederated Tribes of the Warm Springs Reservation of Oregon; Cowlitz Indian Tribe, Washington; Kalispel Indian Community of the Kalispel Reservation, Washington; Nez Perce Tribe, Idaho; Shoalwater Bay Tribe of the Shoalwater Bay Indian Reservation, Washington; and the Spokane Tribe of the Spokane Reservation, Washington (hereinafter referred to as ''The Tribes''). The Slater Museum of Natural History, University of Puget Sound also consulted with the following non-Federally recognized Indian groups: the Chinook Tribe and the Wanapum Band (hereinafter referred to as ''The Indian Groups'').

The Slater Museum of Natural History, University of Puget Sound received a formal, joint intertribal NAGPRA claim for the individual described in this notice from the Confederated Tribes and Bands of the Yakama Nation, Washington; Confederated Tribes of the Colville Reservation, Washington; Confederated Tribes of the Umatilla Indian Reservation, Oregon; Confederated Tribes of the Warm Springs Reservation of Oregon; and the Wanapum Band, a non-Federally recognized Indian group.

History and Description of the Remains

In May 1934, a human remain—a mandible—representing a minimum of

one individual was likely removed from ''Columbia River, Wa.''. This area of removal is based on information supplied by Stanley G. Jewett. Jewett donated many mammal and bird collections to the Slater Museum of Natural History. The mandible was part of Accession 483, which included all of the human remains given by Jewett to the Slater Museum. The mandible was reviewed by a physical anthropologist who noted the presence of a broad and wide ascending ramus and a straight mandibular border. These characteristics indicate that the individual is likely of Native American ancestry. No known individual was identified. No associated funerary objects are present.

Jewett's bird and mammal collecting catalogs (noted for their meticulousness) that are dated May 1934 indicate that he was on the Oregon Coast near the Columbia River during that time. His other catalog entries for that month were from the southeast Oregon region, away from the Columbia River. However, the remain is white in color, and it is the opinion of museum staff that it does not exhibit the darker coloration usually found on remains removed from burials west of the Cascade mountains; this may suggest the individual was removed from a location east of the Cascades. In general, Jewett traveled extensively and may have been almost anywhere on the Columbia River from the Canadian border to the Pacific Coast during May 1934. While Jewett's collecting catalogs indicate that he was working at the mouth of the Columbia River near the Washington coast during this time period, museum staff consider the coloration of the remain to suggest an origin east of the Cascades.

Since it is not possible to determine specific provenience, museum officials reasonably believe that the removal was from somewhere along the Columbia River, likely from an area east of the Cascades (based on the bone coloration). This area encompasses 18 Washington State counties: Pacific, Wahkiakum, Cowlitz, Clark, Skamania, Klickitat, Benton, Walla Walla, Franklin, Yakima, Grant, Kittitas, Chelan, Douglas, Lincoln, Okanogan, Ferry, and Stevens.

Determinations Made by the Slater Museum of Natural History, University of Puget Sound

Officials of the Slater Museum of Natural History, University of Puget Sound have determined that:

- Based on morphological characteristics and museum records, the human remains are Native American.
- Pursuant to 25 U.S.C. 3001(2), a relationship of shared group identity cannot be reasonably traced between the Native American human remains and any present-day Indian tribe.
- Multiple lines of evidence, including treaties (*e.g.* Treaty of Camp Stevens), Acts of Congress, and Executive Orders, indicate that the land from which the Native American human remain was removed is the aboriginal and ceded land of The Tribes and The Indian Groups.
- Pursuant to 25 U.S.C. 3001(9), the human remain described in this notice represent the physical remain of one individual of Native American ancestry.
- Pursuant to 43 CFR 10.11(c)(1), the disposition of the human remain is to the Confederated Tribes and Bands of the Yakama Nation, Washington; Confederated Tribes of the Colville Reservation, Washington; Confederated Tribes of the Umatilla Indian Reservation, Oregon; Confederated Tribes of the Warm Springs Reservation of Oregon; and the Wanapum Band, a non-Federally recognized Indian group.

Additional Requestors and Disposition

Representatives of any Indian tribe that believes itself to be culturally affiliated with the human remain or any other Indian tribe that believes it satisfies the criteria in 43 CFR 10.11(c)(1) should contact Peter Wimberger, Slater Museum of Natural History, University of Puget Sound, 1500 North Warner St., Tacoma, WA 98416–1088, telephone (253) 879–2784, before September 7, 2011. Disposition of the human remain to the Confederated Tribes and Bands of the Yakama Nation, Washington; Confederated Tribes of the Colville Reservation, Washington; Confederated Tribes of the Umatilla Indian Reservation, Oregon; Confederated Tribes of the Warm Springs Reservation of Oregon; and the Wanapum Band, a non-Federally recognized Indian group, may proceed after that date if no additional requestors come forward.

The Slater Museum of Natural History, University of Puget Sound is responsible for notifying The Tribes and The Indian Groups that this notice has been published.

Dated: August 2, 2011.

Sherry Hutt,

Manager, National NAGPRA Program.

[FR Doc. 2011–19990 Filed 8–5–11; 8:45 am]

BILLING CODE 4312–50–P

DEPARTMENT OF THE INTERIOR

National Park Service

[NPS–WASO–NRNHL–0711–8017; 2280–665]

National Register of Historic Places; Notification of Pending Nominations and Related Actions

Nominations for the following properties being considered for listing or related actions in the National Register were received by the National Park Service before July 16, 2011. Pursuant to § 60.13 of 36 CFR part 60, written comments are being accepted concerning the significance of the nominated properties under the National Register criteria for evaluation. Comments may be forwarded by United States Postal Service, to the National Register of Historic Places, National Park Service, 1849 C St., NW., MS 2280, Washington, DC 20240; by all other carriers, National Register of Historic Places, National Park Service, 1201 Eye St., NW., 8th Floor, Washington, DC 20005; or by fax, 202–371–6447. Written or faxed comments should be submitted by August 23, 2011. Before including your address, phone number, e-mail address, or other personal identifying information in your comment, you should be aware that your entire comment—including your personal identifying information—may be made publicly available at any time. While you can ask us in your comment to withhold your personal identifying information from public review, we cannot guarantee that we will be able to do so.

J. Paul Loether,

Chief, National Register of Historic Places/National Historic Landmarks Program.

ALABAMA

Perry County

Moore—Webb—Holmes Plantation, Jct. of AL 14 & Webb Rd., Marion, 11000566

ARIZONA

Maricopa County

Silk Stocking Neighborhood Historic District, Generally bounded by Erie St., Chandler Blvd., Delaware St. & alley W. of Washington St., Chandler, 11000567

Pima County

Adams, James P. and Sarah, House, 5201 N. Camino Escuela, Tucson, 11000568

Corcoran, John P. and Helena S., House, 2200 E. Calle Lustre, Tucson, 11000569

Fletcher, P.W., House, 4850 N. Campbell Ave., Tucson, 11000570

Hall, Arthur C. and Helen Neel, House, (Architecture and Planning of Josias Joesler and John Murphey in Tucson, AZ MPS), 4875 N. Campbell Ave., Tucson, 11000571

Hall, Lewis D.W., House, 3160 E. Via Celeste, Tucson, 11000572

McFadden, Phillip G. House, 5130 Camino Real, Tucson, 11000573

Tout, Edwin I. and Gladys M., House, (Architecture and Planning of Josias Joesler and John Murphey in Tucson, AZ MPS), 5000 N. Campbell Ave., Tucson, 11000574

Van Schaick, Nellie Mae Kellogg, House, (Architecture and Planning of Josias Joesler and John Murphey in Tucson, AZ MPS), 4141 N. Pontatoc Rd., Tucson, 11000575

CALIFORNIA

Kern County

Nuestra, Senora Reina de la Paz, 29700 Woodford-Tehachapi Rd., Keene, 11000576

FLORIDA

Lee County

Downtown Boca Grande Historic District, Bounded by Gilchrist Ave., W., 5th St., N., Palm Ave., E., & 3rd St., S., Boca Grande, 11000577

GEORGIA

Candler County

Metter Downtown Historic District, Centered on Broad & Roundtree Sts., Metter, 11000578

Rabun County

Hodgson, Asbury and Sallie, House, 278 White St., Dillard, 11000579

KANSAS

Neosho County

Murray Hill School, (Public Schools of Kansas MPS), 400 W. 3rd St., Chanute, 11000580

MAINE

Franklin County

Barn on Lot 8, Range G, 816 Foster Hill Rd., (Freeman Township), Kingfield, 11000581

Oxford County

Record, E.C. and M.I., Homestead, 8 Bean Rd., Buckfield, 11000582

Waterford Historic District (Boundary Increase), 30 Valley Rd., Waterford, 11000583

York County

Kennebunk High School, 14 Park St., Kennebunk, 11000584

MASSACHUSETTS

Hampshire County

Amherst Central Business District (Boundary Increase), 30 Boltwood Ave., Amherst, 11000585

Worcester County

Oxford Main Street Historic District, Barton, Charlton, Church, E. Main, Elm, Fremont, & Main Sts., Quobaug Ave., Sigourney St., Sutton Ave., West St. Oxford, 11000586

MISSOURI

St. Louis Independent City, Apartments at 5561–71 Chamberlain, 5561–5571 Chamberlain, St. Louis (Independent City), 11000587

MONTANA

Stillwater County

Atlas Block, 523 & 528 E. Pike Ave., Columbus, 11000588

NEW JERSEY

Burlington County

Main Street Friends Meeting House, 19 South St., (Medford Township), Medford, 11000589

Hudson County

Saint Vincent de Paul Roman Catholic Church, 979 Ave. C, Bayonne, 11000590

Mercer County

First Presbyterian Church of Pennington, 13 S. Main St., Pennington, 11000591

Warren County

Rutherford Hall, Jct. of Cty. Rd., 571 & I–80 (Allamuchy Township), Allamuchy, 11000592

NEW YORK

Broome County

Johnson City Historic District, Generally Corless Ave., Arch St., Main St., Lester Ave. & Helen Dr., Johnson City, 11000593

Erie County

Coles, Robert T., House and Studio, 321 Humboldt Pkwy., Buffalo, 11000594

Herkimer County

Bonfoy—Barstow House, 485 E. Main St., West Winfield, 11000595

Little Falls City Hall, 659 E. Main St., Little Falls, 11000596

Nassau County

Harding, Stephen, House, 182 14th Ave., Sea Cliff, 11000597

House at 52 Frost Mill Road, 52 Frost Mill Rd., Mill Neck, 11000598

Onondaga County

Leavenworth Apartments, 615 James St., Syracuse, 11000599

New Kasson Apartments, 622 James St., Syracuse, 11000600

Otsego County

Springfield Center Elementary School, 129 Cty. Rd. 29A, Springfield Center, 11000601

Suffolk County

Woodhull, Josiah, House, 170 North Country Rd., Shoreham, 11000602

NORTH DAKOTA

Grand Forks County

Kegs Drive-In, The, 901 N. 5th St., Grand Forks, 11000603

VIRGINIA

Botetourt County

McDonald, Bryan Jr., House, 4084 Catawba Rd., Troutville, 11000604

Louisa County

Louisa High School, 212 Fredericksburg Ave., Louisa, 11000605

Mecklenburg County

Tanner, O.H.P., House, 3199 Old St. Tammany Rd., LaCrosse, 11000606

[FR Doc. 2011–19967 Filed 8–5–11; 8:45 am]

BILLING CODE 4312–51–P

DEPARTMENT OF LABOR

Wage and Hour Division

Proposed Extension of the Approval of Information Collection Requirements

AGENCY: Wage and Hour Division, Department of Labor.

ACTION: Notice.

SUMMARY: The Department of Labor, as part of its continuing effort to reduce paperwork and respondent burden, conducts a preclearance consultation program to provide the general public and Federal agencies with an opportunity to comment on proposed and/or continuing collections of information in accordance with the Paperwork Reduction Act of 1995 (PRA95). 44 U.S.C. 3056(c)(2)(A). This program helps to ensure that requested data can be provided in a desired format, reporting burden (time and financial resources) is minimized, collection instruments are clearly understood, and the impact of collection requirements on respondents can be properly assessed. Currently, the Wage and Hour Division is soliciting comments concerning its proposal to extend Office of Management and Budget (OMB) approval of the Information Collection: Davis-Bacon Certified Payroll. A copy of the proposed information request can be obtained by contacting the office listed below in the **FOR FURTHER INFORMATION CONTACT** section of this Notice.

DATES: Written comments must be submitted to the office listed in the **ADDRESSES** section below on or before October 7, 2011.

ADDRESSES: You may submit comments identified by Control Number 1235–0008, by either one of the following methods: *E-mail: WHDPRAComments@dol.gov; Mail, Hand Delivery, Courier:* Division of Regulations, Legislation, and Interpretation, Wage and Hour, U.S. Department of Labor, Room S–3502, 200 Constitution Avenue, NW., Washington, DC 20210. *Instructions:* Please submit one copy of your comments by only one method. All submissions received must include the agency name and Control Number identified above for this information collection. Because we continue to experience delays in

receiving mail in the Washington, DC area, commenters are strongly encouraged to transmit their comments electronically via e-mail or to submit them by mail early. Comments, including any personal information provided, become a matter of public record. They will also be summarized and/or included in the request for OMB approval of the information collection request.

FOR FURTHER INFORMATION CONTACT: Mary Ziegler, Director, Division of Regulations, Legislation, and Interpretation, Wage and Hour, U.S. Department of Labor, Room S–3502, 200 Constitution Avenue, NW., Washington, DC 20210; telephone: (202) 693–0406 (this is not a toll-free number). Copies of this notice may be obtained in alternative formats (Large Print, Braille, Audio Tape, or Disc), upon request, by calling (202) 693–0023 (not a toll-free number). TTY/TTD callers may dial toll-free (877) 889–5627 to obtain information or request materials in alternative formats.

SUPPLEMENTARY INFORMATION:

I. Background: The Davis-Bacon and related Acts (DBRA) require the application of Davis-Bacon labor standards to Federal and Federally assisted construction. The Copeland Act (40 U.S.C. 3145) requires the Secretary of Labor to prescribe reasonable regulations for contractors and subcontractors engaged in construction work subject to Davis-Bacon labor standards. While the Federal contracting or assistance-administering agencies have a primary responsibility for enforcement of Davis-Bacon labor standards, Reorganization Plan Number 14 of 1950 assigns to the Secretary of Labor responsibility for developing government-wide policies, interpretations and procedures to be observed by the contracting and assisting agencies, in order to assure coordination of administration and consistency of DBRA enforcement.

The Copeland Act provision cited above specifically requires the regulations to ''include a provision that each contractor and subcontractor each week must furnish a statement on the wages paid each employee during the prior week.'' This requirement is implemented by 29 CFR 3.3 and 3.4 and the standard Davis-Bacon contract clauses set forth at 29 CFR 5.5. Regulations 29 CFR 5.5 (a)(3)(ii)(A) requires contractors to submit weekly a copy of all payrolls to the Federal agency contracting for or financing the construction project. If the agency is not a party to the contract, the contractor will submit the payrolls to the applicant, sponsor, or owner, as the case may be, for transmission to the contracting agency. This same section requires that the payrolls submitted shall set out accurately and completely the information required to be maintained under 29 CFR 5.5(a)(3)(i), except that full social security numbers and home addresses shall not be included on weekly transmittals, and instead, the payrolls shall only need to include an individually identifying number for each employee (*e.g.,* the last four digits of the employee's social security number). The required weekly payroll information may be submitted in any form desired. Optional Form WH–347 is available for this purpose from the Wage and Hour Division Web site at *http://www.dol.gov/whd/forms/wh347.pdf*.

Regulations 29 CFR 3.3(b) requires each contractor to furnish weekly a signed ''Statement of Compliance'' accompanying the payroll indicating the payrolls are correct and complete and that each laborer or mechanic has been paid not less than the proper Davis-Bacon Act (DBA) prevailing wage rate for the work performed. The weekly submission of a properly executed certification, with the prescribed language set forth on page 2 of Optional Form WH–347, satisfies the requirement for submission of the required ''Statement of Compliance. Id. at §§ 3.3(b), 3.4(b), and 5.5(a)(3)(ii)(B). Regulations 29 CFR 3.4(b) and 5.5(a)(3)(i) require contractors to maintain these records for three years after completion of the work.

II. Review Focus: The Department of Labor is particularly interested in comments which:

- Evaluate whether the proposed collection of information is necessary for the proper performance of the functions of the agency, including whether the information will have practical utility;
- Enhance the quality, utility and clarity of the information to be collected;
- Evaluate the accuracy of the agency's estimate of the burden of the proposed collection of information, including the validity of the methodology and assumptions used;
- Minimize the burden of the collection of information on those who are to respond, including through the use of appropriate automated, electronic, mechanical, or other technological collection techniques or other forms of information technology, *e.g.,* permitting electronic submissions of responses.

III. Current Actions: The DOL seeks an approval for the extension of this information collection requirement that contractors and subcontractors on Federal and Federally assisted construction subject to DBRA labor standards submit weekly certified payrolls in accordance with the statutory, regulatory, and contractual requirements discussed herein.

Type of Review: Extension.

Agency: Wage and Hour Division.

Title: Davis-Bacon Certified Payroll.

OMB Number: 1235–0008.

Affected Public: Business or other for-profit; Federal Government; and State, Local, or Tribal Government.

Total Respondents: 96,096.

Total Annual Responses: 2,210,208.

Estimated Total Burden Hours: 2,062,861.

Estimated Time per Response: 56 minutes.

Frequency: Weekly.

Total Burden Cost (Capital/Startup): $48,580,377.

Total Burden Costs (Operation/Maintenance): $280,697.

Dated: August 1, 2011.

Mary Ziegler,

Director, Division of Regulations, Legislation, and Interpretation.

[FR Doc. 2011–19999 Filed 8–5–11; 8:45 am]

BILLING CODE 4510–27–P

NATIONAL SCIENCE FOUNDATION

Notice of Permit Application Received Under the Antarctic Conservation Act of 1978

AGENCY: National Science Foundation.

ACTION: Notice of Permit Applications Received Under the Antarctic Conservation Act.

SUMMARY: Notice is hereby given that the National Science Foundation (NSF) has received a waste management permit application for operation of a field research camp located in ASPA #128—Western Shore of Admiralty Bay, King George Island by the Antarctic Marine Living Resources Program, Southwest Fisheries Science Center, La Jolla, CA. The application is submitted to NSF pursuant to regulations issued under the Antarctic Conservation Act of 1978.

DATES: Interested parties are invited to submit written data, comments, or views with respect to this permit application within September 7, 2011. Permit applications may be inspected by interested parties at the Permit Office, address below.

ADDRESSES: Comments should be addressed to Permit Office, Room 755, Office of Polar Programs, National

Science Foundation, 4201 Wilson Boulevard, Arlington, Virginia 22230.

FOR FURTHER INFORMATION CONTACT: Dr. Polly A. Penhale at the above address or (703) 292–8030.

SUPPLEMENTARY INFORMATION: NSF's Antarctic Waste Regulation, 45 CFR part 671, requires all U.S. citizens and entities to obtain a permit for the use or release of a designated pollutant in Antarctica, and for the release of waste in Antarctica. NSF has received a permit application under this Regulation for operation of remote research field camp at ASPA #128—Western Shore of Admiralty Bay, King George Island. The camp consists of four structures on the beach between Llano Point and Sphinx Hill which has been in use during the summer since 1977. The camp is used to house researchers (typically 6 people), provide a base of research operations, and allow laboratory studies. Biological investigation is the primary research conducted from the camp.

Designated pollutants would be associated with camp operations [typically air emissions and waste water (urine, greywater, and human solid waste)] and scientific activities (typically research materials). All wastes would be packaged and removed from the site for proper disposal in Chile or the U.S. under approved guidelines prior to the end of each season.

The permit applicant is: George Watters, Director, US AMLR Program, Southwest Fisheries Service, NOAA, 8604 La Jolla Shores Drive, La Jolla, CA 92037 Permit application No. 2012 WM–002.

Nadene G. Kennedy,

Permit Officer.

[FR Doc. 2011–20001 Filed 8–5–11; 8:45 am]

BILLING CODE 7555–01–P

NATIONAL SCIENCE FOUNDATION

Notice of Permit Applications Received Under the Antarctic Conservation Act of 1978

AGENCY: National Science Foundation.

ACTION: Notice of Permit Applications Received Under the Antarctic Conservation Act of 1978, Pub. L. 95–541.

SUMMARY: The National Science Foundation (NSF) is required to publish notice of permit applications received to conduct activities regulated under the Antarctic Conservation Act of 1978. NSF has published regulations under the Antarctic Conservation Act at Title 45 Part 670 of the Code of Federal Regulations. This is the required notice of permit applications received.

DATES: Interested parties are invited to submit written data, comments, or views with respect to this permit application by September 7, 2011. This application may be inspected by interested parties at the Permit Office, address below.

ADDRESSES: Comments should be addressed to Permit Office, Room 755, Office of Polar Programs, National Science Foundation, 4201 Wilson Boulevard, Arlington, Virginia 22230.

FOR FURTHER INFORMATION CONTACT: Polly A. Penhale at the above address or (703) 292–7420.

SUPPLEMENTARY INFORMATION: The National Science Foundation, as directed by the Antarctic Conservation Act of 1978 (Pub. L. 95–541), as amended by the Antarctic Science, Tourism and Conservation Act of 1996, has developed regulations for the establishment of a permit system for various activities in Antarctica and designation of certain animals and certain geographic areas a requiring special protection. The regulations establish such a permit system to designate Antarctic Specially Protected Areas.

The applications received are as follows:

1. *Applicant:* Permit Application ASPA 2012–005, George Watters, Director, U.S. AMLR Program, Southwest Fisheries Science Center, NOAA, 8604 La Jolla Shores Drive, La Jolla, CA 92037.

Activity for Which Permit is Requested: Take, Enter an Antarctic Specially Protected Area, and Import into the USA. The applicant plans to census, photo, capture/restrain, measure, weigh, tag, instrument (TDR, VHF, GLS, GPS, PTT, and/or PIT), anesthesia, sample collection (blood, hair, nail, fecal, skin biopsy, vibrissae, tooth, milk, scat, and IV/IM injections (including DLW) up to 200 adult/juvenile and 600 pup Antarctic fur seals, 50 adult/juvenile Leopard seals, 50 adult/juvenile and 100 pup Southern elephant seals, and 30 adult/juvenile and 20 pup Weddell seals as part of a long-term ecosystem monitoring program established in 1986 studying the foraging ecology, population dynamics, census and reproductive success and energetic of Antarctic seals.

In addition, the applicant will continue studies of the behavioral ecology and population biology of the Adelie, Gentoo and Chinstrap penguins, and interactions among these species and their principal avian predators (skuas, gulls, sheathbills and giant petrels). Up to 2000 Chinstraps, 1500 Adelie, 2700 Gentoo penguins, 250 Brown skua, 350 South polar skua, 600 Giant petrel, 100 Kelp gulls, 150 Blue-eyed shag, 20 Snowy sheathbills, and 200 Cape Petrels will be banded, measured, eggs collected, blood sampled, fecal and feathers sampled. After sample collection, all birds will be released.

Location:

ASPA 149, Cape Shirreff and San Telmo Island,
ASPA 128, Western Shore of Admiralty Bay,
ASPA 151, Lions Rump, Antarctic Peninsula region,
ASPA 108, Green Island, Berthelot Islands, Antarctic Peninsula,
ASPA 112, Coppermine Peninsula, Robert Island,
ASPA 113, Litchfield Island, Arthur Harbor, Palmer Archipelago,
ASPA 125, Fildes Peninsula, King George Island, South Shetland Islands,
ASPA 126, Byers Peninsula, Livingston Island, South Shetland Islands,
ASPA 128, Western Shore of Admiralty Bay, King George Island,
ASPA 132, Potter Peninsula, King George Island, South Shetland Islands,
ASPA 133, Harmony Point, Nelson Island, South Shetland Island,
ASPA 134, Cierva Point offshore islands, Danco Coast, Antarctic Peninsula,
ASPA 139, Biscoe Point, Anvers Island,
ASPA 140, Shores of Port Foster, Deception Island, South Shetland Islands,
ASPA 144, Chile Bay (Discovery Bay),
ASPA 145, Port Foster, Deception Island, South Shetland Islands,
ASPA 146, South Bay, Doumer Island, Palmer Archipelago,
ASPA 148, Mount Flora, Hope Bay, Antarctic Peninsula,
ASPA 149, Cape Shirreff, Livingston Island, South Shetland Islands,
ASPA 150, Ardley Island, Maxwell Bay, King George Island, South Shetland Islands,
ASPA 151, Lions Rump, King George Island, South Shetland Islands,
ASPA 152, Western Bransfield Strait, Antarctic Peninsula,
ASPA 153, East Dallmann Bay, Antarctic Peninsula,
ASPA 171, Narebski Point, Barton Peninsula, King George Island.

Dates: October 1, 2011 to July 30, 2016.

Nadene G. Kennedy,

Permit Officer, Office of Polar Programs.

[FR Doc. 2011–19966 Filed 8–5–11; 8:45 am]

BILLING CODE 7555–01–P

NATIONAL SCIENCE FOUNDATION

Notice of Permit Applications Received Under the Antarctic Conservation Act of 1978

AGENCY: National Science Foundation.

ACTION: Notice of permit applications received under the Antarctic Conservation Act of 1978, Pub. L. 95–541.

SUMMARY: The National Science Foundation (NSF) is required to publish notice of permit applications received to conduct activities regulated under the Antarctic Conservation Act of 1978. NSF has published regulations under the Antarctic Conservation Act at Title 45 Part 670 of the Code of Federal Regulations. This is the required notice of permit applications received.

DATES: Interested parties are invited to submit written data, comments, or views with respect to this permit application by September 7, 2011. This application may be inspected by interested parties at the Permit Office, address below.

ADDRESSES: Comments should be addressed to Permit Office, Room 755, Office of Polar Programs, National Science Foundation, 4201 Wilson Boulevard, Arlington, Virginia 22230.

FOR FURTHER INFORMATION CONTACT: Polly A. Penhale at the above address or (703) 292–7420.

SUPPLEMENTARY INFORMATION: The National Science Foundation, as directed by the Antarctic Conservation Act of 1978 (Pub. L. 95–541), as amended by the Antarctic Science, Tourism and Conservation Act of 1996, has developed regulations for the establishment of a permit system for various activities in Antarctica and designation of certain animals and certain geographic areas requiring special protection. The regulations establish such a permit system to designate Antarctic Specially Protected Areas.

The applications received are as follows:

1. *Applicant:* Permit Application No. 2012–005, George Watters, Director, U.S. AMLR Program, Southwest Fisheries Science Center, NOAA, 8604 La Jolla Shores Drive, La Jolla, CA 92037.

Activity for Which Permit is Requested: Take, Enter an Antarctic Specially Protected Area, and Import into the USA. The applicant plans to census, photo, capture/restrain, measure, weigh, tag, instrument (TDR, VHF, GLS, GPS, PTT, and/or PIT), anesthesia, sample collection (blood, hair, nail, fecal, skin biopsy, vibrissae, tooth, milk, scat, and IV/IM injections (including DLW) up to 200 adult/juvenile and 600 pup Antarctic fur seals, 50 adult/juvenile Leopard seals, 50 adult/juvenile and 100 pup Southern elephant seals, and 30 adult/juvenile and 20 pup Weddell seals as part of a long-term ecosystem monitoring program established in 1986 studying the foraging ecology, population dynamics, census and reproductive success and energetic of Antarctic seals.

In addition, the applicant will continue studies of the behavioral ecology and population biology of the Adelie, Gentoo and Chinstrap penguins, and interactions among these species and their principal avian predators (skuas, gulls, sheathbills and giant petrels). Up to 2000 Chinstraps, 1500 Adelie, 2700 Gentoo penguins, 250 Brown skua, 350 South polar skua, 600 Giant petrel, 100 Kelp gulls, 150 Blue-eyed shag, 20 Snowy sheathbills, and 200 Cape Petrels will be banded, measured, eggs collected, blood sampled, fecal and feathers sampled. After sample collection, all birds will be released.

Location: ASPA 149–Cape Shirreff and San Telmo Island, ASPA 128–Western Shore of Admiralty Bay, and ASPA 151–Lions Rump, Antarctic Peninsula region.

Dates: October 1, 2011 to July 30, 2016.

Nadene G. Kennedy,

Permit Officer, Office of Polar Programs.

[FR Doc. 2011–19961 Filed 8–5–11; 8:45 am]

BILLING CODE 7555–01–P

NUCLEAR REGULATORY COMMISSION

[Docket No. 50–171; NRC–2011–0141]

Exelon Nuclear, Peach Bottom Atomic Power Station, Unit 1; Exemption From Certain Security Requirements

1.0 Background

Exelon Nuclear is the licensee and holder of Facility Operating License No. DPR–12 issued for Peach Bottom Atomic Power Station (PBAPS), Unit 1, located in York County, PA. PBAPS Unit 1 is a permanently shut down nuclear reactor facility. PBAPS Unit 1 was a high-temperature, gas-cooled reactor that was operated from June of 1967 to its final shutdown on October 31, 1974. All spent fuel has been removed from the site, and the spent fuel pool is drained and decontaminated. The reactor vessel, primary system piping, and steam generators remain in place. The facility is permanently shut down in a SAFSTOR condition, defueled and Exelon is no longer authorized to operate or place fuel in the reactor. PBAPS Unit 1 is currently licensed pursuant to Section 104(b) of the Atomic Energy Act of 1954, as amended, and 10 CFR part 50, ''Domestic Licensing of Production and Utilization Facilities,'' to possess but not operate the facility.

All residual radioactivity from the final decommissioned plant configuration is contained within the PBAPS Unit 1 Containment and Spent Fuel Pool Buildings. Within the Containment Building, more than 99.9 percent of the estimated 0.2 megacuries of radioactivity is contained inside the reactor vessel in the form of induced activity in the vessel walls, reactor internals and control rod couplings (Reference 4). The reactor vessel is contained inside the reactor vessel cavity and is accessible only by removing the concrete missile shields, the refueling port flanges and the refueling port shield plugs. The missile shields can only be removed with the building crane which is electrically deactivated.

2.0 Action

Section 50.54(p)(1) of Title 10 of the *Code of Federal Regulations* (10 CFR) states in part, ''The licensee shall prepare and maintain safeguards contingency plan procedures in accordance with Appendix C of Part 73 of this chapter for affecting the actions and decisions contained in the Responsibility Matrix of the safeguards contingency plan.''

Part 73 of 10 CFR, ''Physical Protection of Plant and Materials,'' provides in part in 73.1(a), ''This part prescribes requirements for the establishment and maintenance of a physical protection system which will have capabilities for the protection of special nuclear material at fixed sites and in transit and of plants in which special nuclear material is used.'' In Section 73.55, entitled ''Requirements for physical protection of licensed activities in nuclear power reactors against radiological sabotage,'' paragraph (b)(1) states, ''The licensee shall establish and maintain a physical protection program, to include a security organization, which will have as its objective to provide high assurance that activities involving special nuclear material are not inimical to the common defense and security and do not constitute an unreasonable risk to the public health and safety.''

The U.S. Nuclear Regulatory Commission (NRC or the Commission) revised 10 CFR 73.55, in part, to include the preceding language, through the issuance of a final rule on March 27, 2009. The revised regulation stated that it was applicable to all Part 50 licensees. The NRC became aware that many Part 50 licensees with facilities in decommissioning status did not recognize the applicability of this regulation to their facility. Accordingly, the NRC informed licensees with facilities in decommissioning status and other stakeholders that the requirements of 10 CFR 73.55 were applicable to all Part 50 licensees. By letter dated August 2, 2010, the NRC informed Exelon Nuclear of the applicability of the revised rule and stated that it would have to evaluate the applicability of the regulation to its facility and either make appropriate changes or request an exemption.

By letter dated November 18, 2010, Exelon Nuclear responded to the NRC's letter and requested exemptions from the security requirements in 10 CFR part 73 and 10 CFR 50.54(p).

3.0 Discussion

Pursuant to 10 CFR 50.12, the Commission may, upon application by any interested person or upon its own initiative, grant exemptions from the requirements of 10 CFR part 50, when (1) the exemptions are authorized by law, will not present an undue risk to public health or safety, and are consistent with the common defense and security; and (2) when special circumstances are present. Special circumstances are present, for example, when application of the regulation in the particular circumstances would not serve the underlying purpose of the rule or when compliance would result in costs significantly in excess of those incurred by others similarly situated. Also, pursuant to 10 CFR 73.5, ''Specific exemptions,'' the Commission may, upon application of any interested person or upon its own initiative, grant exemptions from the regulations in Part 73 as it determines are authorized by law and will not endanger life or property or the common defense and security, and are otherwise in the public interest.

The purpose of the security requirements of 10 CFR part 73, as applicable to a 10 CFR part 50 licensed facility, is to prescribe requirements for a facility that possesses and utilizes special nuclear material (SNM). The transfer of the PBAPS Unit 1 spent nuclear fuel to the Idaho National Engineering and Environmental Laboratory (INEEL) for reprocessing was completed on February 17, 1977. With the completion of the fuel transfer, there is no longer any SNM located within PBAPS Unit 1 other than that contained in plant systems as residual contamination.

The remaining radioactive material is in a form that does not pose a risk of removal (*i.e.,* an intact reactor pressure vessel) and is well dispersed and is not easily aggregated. With the removal of the fuel containing SNM, the potential for radiological sabotage or diversion of SNM at the 10 CFR part 50 licensed site was eliminated. Therefore, the continued application of the 10 CFR part 73 requirements to PBAPS Unit 1 would no longer be necessary to achieve the underlying purpose of the rule. Additionally, as has been noted at other decommissioning nuclear power facilities, with the removal of the spent nuclear fuel from the site, the 10 CFR part 50 licensed site would be comparable to a source and byproduct licensee that uses general industrial security (i.e. locks and barriers) to protect the public health and safety. The continued application of 10 CFR part 73 security requirements would cause the licensee to expend significantly more funds for security requirements than other source and byproduct facilities. Therefore, compliance with 10 CFR part 73 would result in costs significantly in excess of those incurred by others similarly situated. Based on the above, the NRC has determined that the removal of the fuel containing SNM at the 10 CFR part 50 licensed site constitutes special circumstances. The possession and responsibility for the security of the SNM was transferred to INEEL and is no longer the responsibility of the licensee. Therefore, protection of the SNM is no longer a requirement of the licensee's 10 CFR part 50 license. With no SNM to protect, there is no need for a safeguards contingency plan or procedures, physical security plan, guard training and qualification plan, or cyber security plan for the PBAPS Unit 1, 10 CFR part 50 licensed site.

4.0 Conclusion

Accordingly, the Commission has determined that, pursuant to 10 CFR 50.12(a), an exemption is authorized by law, will not present an undue risk to the public health and safety, and is consistent with the common defense and security based on the continued maintenance of appropriate security requirements for the remaining SNM contained in plant systems as residual contamination. Additionally, special circumstances are present based on the removal of the spent nuclear fuel from the 10 CFR part 50 licensed site. Therefore, the Commission hereby grants Exelon Nuclear an exemption from the requirements of 10 CFR 50.54(p) at PBAPS Unit 1.

The Commission has also determined that, pursuant to 10 CFR 73.5, an exemption is authorized by law, will not endanger life or property or the common defense and security, and is otherwise in the public interest because the security requirements for the spent fuel containing SNM are no longer the responsibility of the licensee. Therefore, the Commission hereby grants Exelon Nuclear an exemption from the fixed site physical protection requirements of 10 CFR part 73 at PBAPS Unit 1. The fixed site physical protection requirements of 10 CFR part 73 are delineated in §§ 73.20, 74.40, 73.45, 73.46, 73.50, 73.51, 73.54, 73.55, 73.56, 73.57, 73.58, 73.59, 73.60, 73.61, 73.67, Appendix B and Appendix C. The requirements for protection of safeguards information, physical protection of SNM in transit, and records and reports, contained in these or other sections of Part 73 continue to apply. To the extent that the licensee's request for an exemption from 10 CFR part 73 included the requirements other than for the fixed site physical protection requirements, that request is denied.

Part of this licensing action meets the categorical exclusion provision in 10 CFR 51.22(c)(25), as part of this action is an exemption from the requirements of the Commission's regulations and (i) there is no significant hazards consideration; (ii) there is no significant change in the types or significant increase in the amounts of any effluents that may be released offsite; (iii) there is no significant increase in individual or cumulative public or occupational radiation exposure; (iv) there is no significant construction impact; (v) there is no significant increase in the potential for or consequences from radiological accidents; and (vi) the requirements from which an exemption is sought involve safeguard plans. Therefore, this part of the action does not require either an environmental assessment or an environmental impact statement.

Pursuant to 10 CFR 51.21, 51.32, and 51.35, an environmental assessment and finding of no significant impact related to part of this exemption was published in the **Federal Register** on June 28, 2011 (76 FR 37842). Based upon the environmental assessment, the Commission has determined that issuance of this exemption will not have a significant effect on the quality of the human environment.

These exemptions are effective immediately.

Dated at Rockville, Maryland, this 1st day of August 2011.

For the U.S. Nuclear Regulatory Commission.

Keith I. McConnell,

Deputy Director, Decommissioning and Uranium Recovery Licensing Directorate, Division of Waste Management and Environmental Protection, Office of Federal and State Materials and Environmental Management Programs.

[FR Doc. 2011–20016 Filed 8–5–11; 8:45 am]

BILLING CODE 7590–01–P

SECURITIES AND EXCHANGE COMMISSION

[Release No. 34–65013; File No. SR–NASDAQ–2011–103]

Self-Regulatory Organizations; The NASDAQ Stock Market LLC; Notice of Filing and Immediate Effectiveness of Proposed Rule Change To Modify Fees for Members Using the NASDAQ Market Center

August 2, 2011.

Pursuant to Section 19(b)(1) of the Securities Exchange Act of 1934 (''Act'')[1] and Rule 19b–4 thereunder,[2] notice is hereby given that, on July 27, 2011, The NASDAQ Stock Market LLC (the ''Exchange'' or ''NASDAQ'') filed with the Securities and Exchange Commission (the ''Commission'') the proposed rule change as described in Items I, II, and III, below, which Items have been prepared by NASDAQ. The Commission is publishing this notice to solicit comments on the proposed rule change from interested persons.

I. Self-Regulatory Organization's Statement of the Terms of Substance of the Proposed Rule Change

NASDAQ proposes to modify pricing for NASDAQ members using the NASDAQ Market Center. NASDAQ will implement the proposed change on August 1, 2011. The text of the proposed rule change is available from NASDAQ's Web site at *http://nasdaq.cchwallstreet.com*, at NASDAQ's principal office, at the Commission's Public Reference Room, and at the Commission's Web site at *http://www.sec.gov*.

[1] 15 U.S.C. 78s(b)(1).

[2] 17 CFR 240.19b–4.

II. Self-Regulatory Organization's Statement of the Purpose of, and Statutory Basis for, the Proposed Rule Change

In its filing with the Commission, NASDAQ included statements concerning the purpose of and basis for the proposed rule change and discussed any comments it received on the proposed rule change. The text of these statements may be examined at the places specified in Item IV below. NASDAQ has prepared summaries, set forth in Sections A, B, and C below, of the most significant aspects of such statements.

A. Self-Regulatory Organization's Statement of the Purpose of, and the Statutory Basis for, the Proposed Rule Change

1. Purpose

NASDAQ is amending Rule 7018 to make modifications to its pricing schedule for execution of quotes/orders through the NASDAQ Market Center of securities priced at $1 or more. Specifically, NASDAQ has several liquidity provider rebate tiers focused on members that are active in both the NASDAQ Stock Market and the NASDAQ Options Market. Currently, a member that provides shares of liquidity in the NASDAQ Market Center representing 0.9% or more of the total consolidated volume reported to all consolidated transaction reporting plans by all exchanges and trade reporting facilities during the month, and trades a daily average of more than 300,000 contracts in the NASDAQ Options Market during the month, is eligible to receive a rebate of $0.0015 per share executed for its non-displayed quotes/orders and $0.00295 per share executed for its displayed quotes/orders. NASDAQ is modifying the tier requirements slightly to require liquidity in the NASDAQ Market Center representing more than 1.0% of total consolidated volume, and an average daily volume of more than 200,000 contracts in the NASDAQ Options Market. Although NASDAQ is raising the requirement for liquidity provision in the NASDAQ Market Center and lowering the requirement for NASDAQ Options Market activity, it is NASDAQ's expectation, based on observed trading patterns in the market, that the change will make it easier for members to achieve the criteria for the tier, and therefore will result in a price reduction.

2. Statutory Basis

NASDAQ believes that the proposed rule change is consistent with the provisions of Section 6 of the Act,[3] in general, and with Section 6(b)(4) of the Act,[4] in particular, in that it provides for the equitable allocation of reasonable dues, fees and other charges among members and issuers and other persons using any facility or system which NASDAQ operates or controls. All similarly situated members are subject to the same fee structure, and access to NASDAQ is offered on fair and non-discriminatory terms.

NASDAQ notes that its pricing tiers focused on members active in both the NASDAQ Market Center and the NASDAQ Options Market are responsive to the convergence of trading in which members simultaneously trade different asset classes within a single strategy. NASDAQ also notes that cash equities and options markets are linked, with liquidity and trading patterns on one market affecting those on the other. Accordingly, pricing incentives that encourage market participant activity in both markets recognize that activity in the options markets also supports price discovery and liquidity provision in the NASDAQ Market Center. Moreover, NASDAQ believes that these changes are reasonable because they will make it easier for members active in both markets to qualify for an enhanced rebate, and are also non-discriminatory and equitable. They are open to all members, but are not the exclusive means by which members may qualify for the associated rebate levels. Accordingly, members are not required to trade in the NASDAQ Options Market in order to receive the applicable rebates.

Finally, NASDAQ notes that it operates in a highly competitive market in which market participants can readily favor competing venues if they deem fee levels at a particular venue to be excessive. In such an environment, NASDAQ must continually adjust its fees to remain competitive with other exchanges and with alternative trading systems that have been exempted from compliance with the statutory standards applicable to exchanges. NASDAQ believes that the proposed rule change reflects this competitive environment because it will broaden the conditions under which members may qualify for higher liquidity provider rebates.

B. Self-Regulatory Organization's Statement on Burden on Competition

NASDAQ does not believe that the proposed rule change will result in any burden on competition that is not necessary or appropriate in furtherance

[3] 15 U.S.C. 78f.

[4] 15 U.S.C. 78f(b)(4).

of the purposes of the Act, as amended. Because the market for order execution and routing is extremely competitive, members may readily opt to disfavor NASDAQ's execution services if they believe that alternatives offer them better value. For this reason and the reasons discussed in connection with the statutory basis for the proposed rule change, NASDAQ does not believe that the proposed changes will impair the ability of members or competing order execution venues to maintain their competitive standing in the financial markets.

C. Self-Regulatory Organization's Statement on Comments on the Proposed Rule Change Received From Members, Participants, or Others

Written comments were neither solicited nor received.

III. Date of Effectiveness of the Proposed Rule Change and Timing for Commission Action

The foregoing rule change has become effective pursuant to Section 19(b)(3)(A)(ii) of the Act.[5] At any time within 60 days of the filing of the proposed rule change, the Commission summarily may temporarily suspend such rule change if it appears to the Commission that such action is necessary or appropriate in the public interest, for the protection of investors, or otherwise in furtherance of the purposes of the Act. If the Commission takes such action, the Commission shall institute proceedings to determine whether the proposed rule should be approved or disapproved.

IV. Solicitation of Comments

Interested persons are invited to submit written data, views, and arguments concerning the foregoing, including whether the proposed rule change is consistent with the Act. Comments may be submitted by any of the following methods:

Electronic Comments

- Use the Commission's Internet comment form (*http://www.sec.gov/rules/sro.shtml);* or
- Send an e-mail to *rule-comments@sec.gov.* Please include File Number SR–NASDAQ–2011–103 on the subject line.

Paper Comments

- Send paper comments in triplicate to Elizabeth M. Murphy, Secretary, Securities and Exchange Commission, 100 F Street, NE., Washington, DC 20549–1090.

All submissions should refer to File Number SR–NASDAQ–2011–103. This file number should be included on the subject line if e-mail is used. To help the Commission process and review your comments more efficiently, please use only one method. The Commission will post all comments on the Commission's Internet Web site (*http://www.sec.gov/rules/sro.shtml).* Copies of the submission, all subsequent amendments, all written statements with respect to the proposed rule change that are filed with the Commission, and all written communications relating to the proposed rule change between the Commission and any person, other than those that may be withheld from the public in accordance with the provisions of 5 U.S.C. 552, will be available for Web site viewing and printing in the Commission's Public Reference Room, 100 F Street, NE., Washington, DC 20549, on official business days between the hours of 10 a.m. and 3 p.m. Copies of the filing also will be available for inspection and copying at the principal office of the Exchange. All comments received will be posted without change; the Commission does not edit personal identifying information from submissions. You should submit only information that you wish to make available publicly. All submissions should refer to File Number SR–NASDAQ–2011–103 and should be submitted on or before August 29, 2011.

For the Commission, by the Division of Trading and Markets, pursuant to delegated authority.[6]

Elizabeth M. Murphy,

Secretary.

[FR Doc. 2011–19981 Filed 8–5–11; 8:45 am]

BILLING CODE 8011–01–P

[5] 15 U.S.C. 78s(b)(3)(a)(ii).

[6] 17 CFR 200.30–3(a)(12).

SECURITIES AND EXCHANGE COMMISSION

[Release No. 34–65011; File No. SR–ISE–2011–42]

Self-Regulatory Organizations; Notice of Filing of Proposed Rule Change by International Securities Exchange, Inc., Relating to Rule 717

August 2, 2011.

Pursuant to Section 19(b)(1) of the Securities Exchange Act of 1934 (''Act'')[1] and Rule 19b–4 thereunder,[2] notice is hereby given that on July 25, 2011, the International Securities Exchange, Inc. (''ISE'' or the ''Exchange'') filed with the Securities and Exchange Commission (''SEC'' or ''Commission'') the proposed rule change as described in Items I and II below, which Items have been prepared by the Exchange. The Commission is publishing this notice to solicit comments on the proposed rule change, from interested persons.

I. Self-Regulatory Organization's Statement of the Terms of Substance of the Proposed Rule Change

The ISE is proposing to specify in its rules an existing policy related to the application of Rule 717(d) and (e). The text of the proposed rule change is as follows (additions are in italics):

Rule 717. Limitation on Orders

(a) through (g) no change.

Supplementary Material to Rule 717

.01 through .05 no change.

.06 The exposure requirement of paragraph (d) and (e) of Rule 717 applies to the entry of orders with knowledge that there is a pre-existing unexecuted agency, proprietary, or solicited order on the Exchange. Members may demonstrate that orders were entered without knowledge by providing evidence that effective information barriers between the persons, business units and/or systems entering the orders onto the Exchange were in existence at the time the orders were entered. Such information barriers must be fully documented and provided to the Exchange upon request.

II. Self-Regulatory Organization's Statement of the Purpose of, and Statutory Basis for, the Proposed Rule Change

In its filing with the Commission, the self-regulatory organization included statements concerning the purpose of, and basis for, the proposed rule change and discussed any comments it received on the proposed rule change. The text of these statements may be examined at the places specified in Item IV below. The self-regulatory organization has prepared summaries, set forth in sections A, B and C below, of the most significant aspects of such statements.

A. Self-Regulatory Organization's Statement of the Purpose of, and Statutory Basis for, the Proposed Rule Change

1. Purpose

Rule 717(d) and (e) requires members to expose orders entered on the limit order book for at least one second before executing them as principal or against orders that were solicited from other broker-dealers. This requirement gives

[1] 15 U.S.C. 78s(b)(1).

[2] 17 CFR 240.19b–4.

other market participants an opportunity to participate in the execution of orders before the entering member executes them. The Exchange recognizes, however, that because the Exchange does not identify the member that entered an order on the limit order book, orders from the same firm may inadvertently execute against each other as a result of being entered by disparate persons and/or systems at the same member firm. Therefore, when enforcing Rule 717(d) and (e), the Exchange has never considered the inadvertent interaction of orders from the same firm within one second to be a violation of the exposure requirement.

When investigating potential violations of Rule 717(d) and (e), the Exchange takes into consideration whether orders that executed against each other within one second on the limit order book were entered by persons, business units and/or systems at the same firm that did not have knowledge of the order on the limit order book.[3] Commonly, member firms are able to demonstrate that orders were entered by individuals or systems that did not have the ability to know of the pre-existing order on the limit order book due to information barriers in place at the time the orders were entered.

The Exchange proposes to codify this longstanding policy in Supplementary Material .06 to Rule 717. The proposed rule text specifies that members can demonstrate that orders were entered without knowledge of a pre-existing order on the book represented by the same firm by providing evidence that effective information barriers between the persons, business units and/or systems entering the orders onto the Exchange were in existence at the time the orders were entered. The rule requires that such information barriers be fully documented and provided to the Exchange upon request.[4]

2. Statutory Basis

The basis under the Securities Exchange Act of 1934 (the ''Act'') for this proposed rule change is the requirement under Section 6(b),[5] in general, and Section 6(b)(5)[6] in particular, that an exchange have rules that are designed to prevent fraudulent and manipulative acts and practices, to promote just and equitable principles of trade, to remove impediments to and perfect the mechanism for a free and open market and a national market system, and, in general, to protect investors and the public interest. In particular, the Exchange believes that codifying the Exchange's policy that appropriate information barriers can be used to demonstrate that the execution of two orders within one second was inadvertent because the orders were entered without knowledge of each other, will clarify the intent and application of Rule 717(d) and (e) for ISE members.

The Exchange believes that proposed rule change also is consistent with Section 6(b)(7) of the Act,[7] which requires the rules of an exchange to provide a fair procedure for the disciplining of members and persons associated with members. In particular, by specifying that the information barriers must be fully documented, members will be better prepared to properly respond to requests for information by the Exchange in the course of a regulatory investigation. Moreover, while members are generally required to provide information to the Exchange as requested, specifying that members must provide written documentation regarding information barriers within the context of this rule will assure that all members adhere to the same standard for demonstrating compliance with the rule.

B. Self-Regulatory Organization's Statement on Burden on Competition

The proposed rule change does not impose any burden on competition that is not necessary or appropriate in furtherance of the purposes of the Act.

C. Self-Regulatory Organization's Statement on Comments on the Proposed Rule Change Received From Members, Participants, or Others

The Exchange has not solicited, and does not intend to solicit, comments on this proposed rule change. The Exchange has not received any unsolicited written comments from members or other interested parties.

III. Date of Effectiveness of the Proposed Rule Change and Timing for Commission Action

Within 45 days of the date of publication of this notice in the **Federal Register** or within such longer period (i) As the Commission may designate up to 90 days of such date if it finds such longer period to be appropriate and publishes its reasons for so finding or (ii) as to which the Exchange consents, the Commission shall: (a) By order approve or disapprove such proposed rule change, or (b) institute proceedings to determine whether the proposed rule change should be disapproved.

IV. Solicitation of Comments

Interested persons are invited to submit written data, views, and arguments concerning the foregoing, including whether the proposed rule change is consistent with the Act. Comments may be submitted by any of the following methods:

Electronic Comments

- Use the Commission's Internet comment form (*http://www.sec.gov/rules/sro.shtml*); or
- Send an e-mail to *rule-comments@sec.gov.* Please include File Number SR–ISE–2011–42 on the subject line.

Paper Comments

- Send paper comments in triplicate to Elizabeth M. Murphy, Secretary, Securities and Exchange Commission, 100 F Street, NE., Washington, DC 20549–1090.

All submissions should refer to File Number SR–ISE–2011–42. This file number should be included on the subject line if e-mail is used. To help the Commission process and review your comments more efficiently, please use only one method. The Commission will post all comments on the Commission's Internet Web site (*http://www.sec.gov/rules/sro.shtml*). Copies of the submission, all subsequent amendments, all written statements with respect to the proposed rule change that are filed with the Commission, and all written communications relating to the proposed rule change between the Commission and any person, other than those that may be withheld from the public in accordance with the provisions of 5 U.S.C. 552, will be available for Web site viewing and printing in the Commission's Public Reference Room, 100 F Street, NE., Washington, DC 20549, on official business days between the hours of 10 a.m. and 3 p.m. Copies of such filing also will be available for inspection and copying at the principal office of the Exchange. All comments received will be posted without change; the Commission does not edit personal identifying information from

[3] The Exchange conducts routine surveillance to identify instances when an order on the limit order book is executed against an order entered by the same firm within one second.

[4] The Exchange reviews information barrier documentation to evaluate whether a member has implemented processes that are reasonably designed to prevent the flow of pre-trade order information given the particular structure of the member firm. Additionally, information barriers are reviewed as part of the Exchange's examination program, which is administered by the Financial Industry Regulatory Authority (''FINRA'') pursuant to a regulatory services agreement.

[5] 15 U.S.C. 78f(b).

[6] 15 U.S.C. 78f(b)(5).

[7] 15 U.S.C. 78f(b)(7).

submissions. You should submit only information that you wish to make publicly available. All submissions should refer to File Number SR–ISE–2011–42 and should be submitted on or before August 29, 2011.

For the Commission, by the Division of Trading and Markets, pursuant to delegated authority.[8]

Elizabeth M. Murphy,

Secretary.

[FR Doc. 2011–19982 Filed 8–5–11; 8:45 am]

BILLING CODE 8011–01–P

SECURITIES AND EXCHANGE COMMISSION

[Release No. 34–65014; File No. SR–NASDAQ–2011–101]

Self-Regulatory Organizations; The NASDAQ Stock Market LLC; Notice of Filing and Immediate Effectiveness of Proposed Rule Change To Amend Fees Assessed Under Rule 7015(h)

August 2, 2011.

Pursuant to Section 19(b)(1) of the Securities Exchange Act of 1934 (''Act''),[1] and Rule 19b–4 thereunder,[2] notice is hereby given that on July 26, 2011, The NASDAQ Stock Market LLC (''NASDAQ'') filed with the Securities and Exchange Commission (''Commission'') the proposed rule change as described in Items I, II, and III below, which Items have been prepared by NASDAQ. The Commission is publishing this notice to solicit comments on the proposed rule change from interested persons.

I. Self-Regulatory Organization's Statement of the Terms of the Substance of the Proposed Rule Change

NASDAQ is proposing to amend the fees assessed under Rule 7015(h). NASDAQ will implement the amended fees effective August 1, 2011.

The text of the proposed rule change is below. Proposed new language is in italics; proposed deletions are in brackets.

* * * * *

7015. Access Services

The following charges are assessed by Nasdaq for connectivity to systems operated by NASDAQ, including the Nasdaq Market Center, the FINRA/NASDAQ Trade Reporting Facility, and FINRA's OTCBB Service. The following fees are not applicable to the NASDAQ Options Market LLC. For related options fees for Access Services refer to Rule 7053.

(a)–(g) No change.

(h) VTE Terminal Fees

• Each ID is subject to a minimum commission fee of $*125*[100] per month unless it executes a minimum of 100,000 shares.

• Each ID receiving market data is subject to pass-through fees for use of these services. Pricing for these services is determined by the exchanges and/or market center.

• Each ID that is given web access is subject to a $*125*[100] monthly fee.

* * * * *

II. Self-Regulatory Organization's Statement of the Purpose of, and Statutory Basis for, the Proposed Rule Change

In its filing with the Commission, NASDAQ included statements concerning the purpose of and basis for the proposed rule change and discussed any comments it received on the proposed rule change. The text of these statements may be examined at the places specified in Item IV below. NASDAQ has prepared summaries, set forth in Sections A, B, and C below, of the most significant aspects of such statements.

A. Self-Regulatory Organization's Statement of the Purpose of, and Statutory Basis for, the Proposed Rule Change

1. Purpose

NASDAQ is proposing to increase the fees assessed members under Rule 7015(h) for use of VTE terminals. A VTE terminal is a basic front-end user interface used by NASDAQ members to connect to, and enter orders in, The Nasdaq Market Center. Members using VTE terminals pay the exchanges directly for data feeds and services provided by NASDAQ and other exchanges or market centers through VTE at the SEC-approved rate that they would pay to receive the data feeds through other means. These data feeds provide information that is necessary for users to enter orders through VTE. The two fees assessed under Rule 7015(h) relate to optional web access and commissions.

Rule 7015(h) currently assesses monthly a minimum commission fee of $100 fee per ID, and a web access fee of $100 per ID. NASDAQ last raised fees assessed under Rule 7015(h) in 2007 when it raised the fee for access to the terminal via the web from $50 monthly to $100 monthly, and raised the minimum commission fee for users executing orders totaling less than 100,000 shares per month from $50 monthly to $100 monthly.[3] In light of increasing costs, NASDAQ is proposing to increase the fee for access to the terminal via the web from $100 monthly to $125 monthly, and increase the minimum commission fee for users executing orders totaling less than 100,000 shares per month from $100 monthly to $125 monthly.

NASDAQ notes that web connectivity is one option available to NASDAQ users for accessing the VTE terminal. Another option is access through extranet connectivity, where a user contracts directly with a third-party extranet provider and pays fees to that provider. With respect to minimum commission fees, members that execute total orders above the 100,000 share threshold will continue to not be assessed a commission fee.

Based on NASDAQ's operation of the VTE since it was acquired from INET, NASDAQ believes that the pricing changes are warranted in order to appropriately balance the demand for the product with increasing platform, overhead and technology infrastructure costs.

2. Statutory Basis

NASDAQ believes that the proposed rule change is consistent with the provisions of Section 6 of the Act,[4] in general, and with Section 6(b)(4) of the Act,[5] in particular, in that it provides for the equitable allocation of reasonable dues, fees and other charges among members and issuers and other persons using any facility or system which NASDAQ operates or controls. All similarly situated members are subject to the same fee structure, and access to this NASDAQ service is offered on fair and non-discriminatory terms. As noted, NASDAQ has not increased the fees assessed under Rule 7015(h) since 2007 despite incurring increased costs. Use of VTE terminals is voluntary and members can avail themselves of numerous other means of accessing The Nasdaq Market Center. NASDAQ further notes that it operates in a highly competitive market in which market participants can readily favor competing venues if they deem fee levels at a particular venue to be excessive.

B. Self-Regulatory Organization's Statement on Burden on Competition

NASDAQ does not believe that the proposed rule change will result in any burden on competition that is not

[8] 17 CFR 200.30–3(a)(12).

[1] 15 U.S.C. 78s(b)(1).

[2] 17 CFR 240.19b–4.

[3] Securities Exchange Act Release No. 56390 (September 12, 2007), 72 FR 53614 (September 19, 2007) (SR–NASDAQ–2007–075).

[4] 15 U.S.C. 78f.

[5] 15 U.S.C. 78f(b)(4).

necessary or appropriate in furtherance of the purposes of the Act, as amended.

C. Self-Regulatory Organization's Statement on Comments on the Proposed Rule Change Received From Members, Participants, or Others

Written comments were neither solicited nor received.

III. Date of Effectiveness of the Proposed Rule Change and Timing for Commission Action

The foregoing rule change has become effective pursuant to Section 19(b)(3)(A)(ii) of the Act [6] and subparagraph (f)(2) of Rule 19b–4 thereunder.[7] At any time within 60 days of the filing of the proposed rule change, the Commission summarily may temporarily suspend such rule change if it appears to the Commission that such action is necessary or appropriate in the public interest, for the protection of investors, or otherwise in furtherance of the purposes of the Act. If the Commission takes such action, the Commission shall institute proceedings to determine whether the proposed rule should be approved or disapproved.

IV. Solicitation of Comments

Interested persons are invited to submit written data, views, and arguments concerning the foregoing, including whether the proposed rule change is consistent with the Act. Comments may be submitted by any of the following methods:

Electronic Comments

- Use the Commission's Internet comment form (*http://www.sec.gov/rules/sro.shtml*); or
- Send an e-mail to *rule-comments@sec.gov.* Please include File Number SR–NASDAQ–2011–101 on the subject line.

Paper Comments

- Send paper comments in triplicate to Elizabeth M. Murphy, Secretary, Securities and Exchange Commission, 100 F Street, NE., Washington, DC 20549–1090.

All submissions should refer to File Number SR–NASDAQ–2011–101. This file number should be included on the subject line if e-mail is used. To help the Commission process and review your comments more efficiently, please use only one method. The Commission will post all comments on the Commission's Internet Web site (*http://www.sec.gov/rules/sro.shtml*). Copies of the submission, all subsequent amendments, all written statements with respect to the proposed rule change that are filed with the Commission, and all written communications relating to the proposed rule change between the Commission and any person, other than those that may be withheld from the public in accordance with the provisions of 5 U.S.C. 552, will be available for Web site viewing and printing in the Commission's Public Reference Room on official business days between the hours of 10 a.m. and 3 p.m. Copies of such filing also will be available for inspection and copying at the principal offices of the Exchange. All comments received will be posted without change; the Commission does not edit personal identifying information from submissions. You should submit only information that you wish to make available publicly. All submissions should refer to File Number SR–NASDAQ–2011–101, and should be submitted on or before August 29, 2011.

For the Commission, by the Division of Trading and Markets, pursuant to delegated authority.[8]

Elizabeth M. Murphy,

Secretary.

[FR Doc. 2011–19983 Filed 8–5–11; 8:45 am]

BILLING CODE 8011–01–P

[6] 15 U.S.C. 78s(b)(3)(a)(ii).

[7] 17 CFR 240.19b–4(f)(2).

[8] 17 CFR 200.30–3(a)(12).

SECURITIES AND EXCHANGE COMMISSION

[Release No. 34–65007; File No. SR–CBOE–2011–071]

Self-Regulatory Organizations; Chicago Board Options Exchange, Incorporated; Notice of Filing and Immediate Effectiveness of a Proposed Rule Change To Amend the Fee Schedule Concerning Facilitation Orders in Multiply-Listed FLEX Options

August 2, 2011.

Pursuant to Section 19(b)(1) of the Securities Exchange Act of 1934 (the ''Act'') [1] and Rule 19b–4 thereunder,[2] notice is hereby given that on August 1, 2011, the Chicago Board Options Exchange, Incorporated (the ''Exchange'' or ''CBOE'') filed with the Securities and Exchange Commission (the ''Commission'') the proposed rule change as described in Items I, II, and III below, which Items have been prepared by the Exchange. The Commission is publishing this notice to solicit comments on the proposed rule change from interested persons.

I. Self-Regulatory Organization's Statement of the Terms of Substance of the Proposed Rule Change

The Exchange hereby proposes to waive the Clearing Trading Permit Holder Proprietary Transaction Fee for Clearing Trading Permit Holders executing facilitation orders in multiply-listed FLEX Options classes. The text of the proposed rule change is available on the Exchange's Web site (*http://www.cboe.org/legal*), at the Exchange's Office of the Secretary, and at the Commission.

II. Self-Regulatory Organization's Statement of the Purpose of, and Statutory Basis for, the Proposed Rule Change

In its filing with the Commission, the self-regulatory organization included statements concerning the purpose of and basis for the proposed rule change and discussed any comments it received on the proposed rule change. The text of those statements may be examined at the places specified in Item IV below. The Exchange has prepared summaries, set forth in Sections A, B, and C below, of the most significant parts of such statements.

A. Self-Regulatory Organization's Statement of the Purpose of, and Statutory Basis for, the Proposed Rule Change

1. *Purpose*

Over-the-counter (''OTC'') trading and Flexible Exchange Options (''FLEX'') trading are similar in that both are highly customized, and largely involve customer-to-firm trades. Due to regulatory changes and other market forces, the Exchange believes that market participants interested in executing these types of customized, customer-to-firm trades will begin to transition from executing such trades in the OTC markets to executing them as FLEX trades. Currently, a number of other exchanges which also host FLEX trading, including the NASDAQ OMX PHLX LLC (''PHLX''), do not charge transaction fees on firm facilitation orders in multiply-listed FLEX Options classes [3] (the nature of a facilitation order is such that it provides a market for a trade, and only Clearing Trading Permit Holders (or firms, on other exchanges) can enter such orders). Because CBOE anticipates an increase in FLEX trading, and because CBOE would like to be able to compete with other exchanges for FLEX trades on an even

[1] 15 U.S.C. 78s(b)(1).

[2] 17 CFR 240.19b–4.

[3] *See* PHLX Fee Schedule, page 9.

footing, the Exchange hereby proposes to waive the Clearing Trading Permit Holder Proprietary Transaction Fee for Clearing Trading Permit Holders executing facilitation orders in multiply-listed FLEX Options classes (the ''Fee Waiver'').

A number of Clearing Trading Permit Holders will not be affected by this rule change because such Clearing Trading Permit Holders trade multiply-listed options in such volume on the Exchange (in capacities other than as a Clearing Trading Permit Holder executing facilitation orders in multiply-listed FLEX Options classes) that their overall trading activity already meets the Exchange's $75,000 per month Multiply-Listed Option Fee Cap [4] (the ''Fee Cap'') and the Fee Waiver will not bring such Clearing Trading Permit Holders below the Fee Cap. However, there are some firms that are very active in OTC trading, but not very active (relatively speaking) in the trading of listed options, and therefore do not reach the Fee Cap. CBOE proposes the Fee Waiver in order to attract such firms to send order flow to the Exchange.

The Exchange proposes limiting the Fee Waiver to Clearing Trading Permit Holders facilitation orders because other exchanges also limit not charging such fees to facilitation orders,[5] and the Exchange intends the proposed Fee Waiver to allow CBOE to compete with such exchanges for such orders. The Exchange proposes limiting the Fee Waiver to multiply-listed FLEX Options classes, as opposed to also including singly-listed (proprietary) FLEX Options classes, because the Exchange devoted a lot of resources to develop such proprietary singly-listed FLEX Options classes, and therefore must continue to collect fees for trading in such classes in order to justify and recoup such development costs.

The proposed rule change will take effect on August 1, 2011.

2. *Statutory Basis*

The proposed rule change is consistent with Section 6(b) of the Act,[6] in general, and furthers the objectives of Section 6(b)(4) [7] of the Act in particular, in that it is designed to provide for the equitable allocation of reasonable dues, fees, and other charges among CBOE Trading Permit Holders and other persons using Exchange facilities. The Exchange believes the proposed Fee Waiver is reasonable because it merely waives an already-existing fee and certainly replacing a current fee with no fee is a ''reasonable'' change for those parties who had previously been paying the fee. The Exchange also believes the proposed Fee Waiver is reasonable because it would make the amount comparable to the fee charged on other exchanges for similar facilitation orders in multiply-listed FLEX Options.[8]

The Exchange believes waiving the Clearing Trading Permit Holder Proprietary Transaction Fee for Clearing Trading Permit Holders executing facilitation orders in multiply-listed FLEX Options classes is equitable and not unfairly discriminatory because the Exchange believes the Fee Waiver will attract new FLEX order flow to the Exchange and incentivize Clearing Trading Permit Holders firms to execute more orders on the Exchange. To the extent that this purpose is achieved, all of the Exchange's market participants should benefit from the improved market liquidity. Further, other exchanges also do not charge transaction fees for such trades.[9] The Exchange believes limiting the proposed Fee Waiver to multiply-listed FLEX Options is equitable and not unfairly discriminatory because the Exchange has devoted a lot of resources to develop proprietary singly-listed FLEX Options classes, and therefore must continue to collect fees for trading in such classes in order to justify and recoup such development costs.

The Exchange operates in a highly competitive market in which sophisticated and knowledgeable market participants readily can, and do, send order flow to competing exchanges based on fee levels. The Exchange believes that the fees it assesses must be competitive with fees assessed on other options exchanges. The Exchange believes that this competitive marketplace impacts the fees present on the Exchange today and influences the proposals set forth above.

B. Self-Regulatory Organization's Statement on Burden on Competition

CBOE does not believe that the proposed rule change will impose any burden on competition not necessary or appropriate in furtherance of the purposes of the Act.

C. Self-Regulatory Organization's Statement on Comments on the Proposed Rule Change Received From Members, Participants or Others

No written comments were solicited or received with respect to the proposed rule change.

III. Date of Effectiveness of the Proposed Rule Change and Timing for Commission Action

The proposed rule change is designated by the Exchange as establishing or changing a due, fee, or other charge, thereby qualifying for effectiveness on filing pursuant to Section 19(b)(3)(A) of the Act [10] and subparagraph (f)(2) of Rule 19b–4 [11] thereunder. At any time within 60 days of the filing of the proposed rule change, the Commission summarily may temporarily suspend such rule change if it appears to the Commission that such action is necessary or appropriate in the public interest, for the protection of investors, or otherwise in furtherance of the purposes of the Act.

IV. Solicitation of Comments

Interested persons are invited to submit written data, views and arguments concerning the foregoing, including whether the proposed rule change is consistent with the Act. Comments may be submitted by any of the following methods:

Electronic Comments

- Use the Commission's Internet comment form (*http://www.sec.gov/rules/sro.shtml*); or
- Send an e-mail to *rule-comments@sec.gov*. Please include File Number SR–CBOE–2011–071 on the subject line.

Paper Comments

- Send paper comments in triplicate to Elizabeth M. Murphy, Secretary, Securities and Exchange Commission, 100 F Street NE., Washington, DC 20549–1090.

All submissions should refer to File Number SR–CBOE–2011–071. This file number should be included on the subject line if e-mail is used. To help the Commission process and review your comments more efficiently, please use only one method. The Commission will post all comments on the Commission's Internet Web site (*http://www.sec.gov/rules/sro/shtml*). Copies of the submission, all subsequent amendments, all written statements with respect to the proposed rule change that are filed with the

[4] *See* the Exchange Fee Schedule, Section 1 (on page 2).

[5] *See* PHLX Fee Schedule, page 9.

[6] 15 U.S.C. 78f(b).

[7] 15 U.S.C. 78f(b)(4).

[8] *See* PHLX Fee Schedule, page 9.

[9] *See* PHLX Fee Schedule, page 9.

[10] 15 U.S.C. 78s(b)(3)(A).

[11] 17 CFR 240.19b–4(f)(2).

Commission, and all written communications relating to the proposed rule change between the Commission and any person, other than those that may be withheld from the public in accordance with the provisions of 5 U.S.C. 552, will be available for Web site viewing and printing in the Commission's Public Reference Room, 100 F Street, NE., Washington, DC 20549, on official business days between the hours of 10 a.m. and 3 p.m. Copies of such filing also will be available for inspection and copying at the principal office of the Exchange. All comments received will be posted without change; the Commission does not edit personal identifying information from submissions. You should submit only information that you wish to make available publicly. All submissions should refer to File No. SR–CBOE–2011–071 and should be submitted on or before August 29, 2011.

For the Commission, by the Division of Trading and Markets, pursuant to delegated authority.[12]

Elizabeth M. Murphy,

Secretary.

[FR Doc. 2011–19979 Filed 8–5–11; 8:45 am]

BILLING CODE 8011–01–P

SECURITIES AND EXCHANGE COMMISSION

[Release No. 34–65008; File No. SR–NSCC–2011–06]

Self-Regulatory Organizations; National Securities Clearing Corporation; Notice of Filing and Immediate Effectiveness of Proposed Rule Change Relating to the Analytic Reporting Service Fees

August 2, 2011.

Pursuant to Section 19(b)(1) of the Securities Exchange Act of 1934 (''Act''),[1] notice is hereby given that on July 21, 2011, the National Securities Clearing Corporation (''NSCC'') filed with the Securities and Exchange Commission (''Commission'') the proposed rule change as described in Items I and II below, which Items have been prepared primarily by NSCC. NSCC filed the proposed rule change pursuant to Section 19(b)(3)(A)(ii) of the Act[2] and Rule 19b–4(f)(2) thereunder[3] so that the proposal was effective upon filing with the Commission. The Commission is publishing this notice to solicit comments on the proposed rule change from interested persons.

I. Self-Regulatory Organization's Statement of Terms of Substance of the Proposed Rule Change

The proposed rule change will add new fees for NSCC's Analytics Reporting Service.

II. Self-Regulatory Organization's Statement of Purpose of, and Statutory Basis for, the Proposed Rule Change

In its filing with the Commission, NSCC included statements concerning the purpose of and basis for the proposed rule change and discussed any comments it received on the proposed rule change. The text of these statements may be examined at the places specified in Item IV below. NSCC has prepared summaries, set forth in sections A, B, and C below, of the most significant aspects of such statements.

A. Self-Regulatory Organization's Statement of the Purpose of, and Statutory Basis for, the Proposed Rule Change

The purpose of the proposed rule change is to revise NSCC's fee schedule as listed in Addendum A of NSCC's Rules and Procedures in order to establish the fees applicable to Insurance Product Service (''IPS'') Members and Limited Members (collectively, ''IPS Members'') using NSCC's IPS Analytic Reporting Service.

On June 20, 2011, NSCC IPS launched its new IPS Analytic Reporting Service (''Service'').[4] NSCC has offered the Service to its IPS Members free of charge since its implementation. Effective September 1, 2011, NSCC will apply the fees applicable to the new Service to IPS Members, including IPS Members whom have ''opted-out'' as that term is defined in Rule 57 of NSCC's Rules and Procedures.[5] The fees for the Analytic Reporting Service will be as follows:

Version[6]	*Tier 1*[7]	*Tier 2*[8]	*Tier 3*[9]	*Opt-out members*
Release 1.0	$1,000	$750	$500	$1,667
Release 2.0	3,000	2,250	1,500	5,000
Release 3.0	8,000	6,000	4,000	13,333
Release 4.0	10,500	7,875	5,250	17,500
Release 5.0	12,000	9,000	6,000	20,000

NSCC states that the proposed rule change is consistent with the requirements of Section 17A of the Act[10] and the rules and regulations thereunder because it updates NSCC's fee schedule to specify the fees associated with a service provided by NSCC and provides for the equitable allocation of fees among NSCC's members.

B. Self-Regulatory Organization's Statement on Burden on Competition

NSCC does not believe that the proposed rule change will have any impact or impose any burden on competition.

[12] 17 CFR 200.30–3(a)(12).

[1] 15 U.S.C. 78s(b)(1).

[2] 15 U.S.C. 78s(b)(3)(A)(ii).

[3] 17 CFR 240.19b–4(f)(2).

[4] For a description of NSCC's IPS Analytic Reporting Service, refer to Securities Exchange Act Release Nos. 63604 (Dec. 23, 2010), 75 FR 82115 (Dec. 29, 2010), and 64666 (Jun. 14, 2011), FR 35931 (Jun. 20, 2011).

[5] NSCC's Rules and Procedures can be found at *http://www.dtcc.com/legal/rules_proc/nscc_rules.pdf.*

[6] Roll out of each subsequent Release Version will be based on client feedback and the timing of functionality enhancements. Roll out of each subsequent Release Version supersedes and replaces the immediately preceding Release Version.

[7] Tier 1 = Carriers with $25 billion or more in assets; Dealers with 10,000 or more financial advisors.

[8] Tier 2 = Carriers with $4 billion or more but less than $25 billion in assets; Dealers with 3,000 or more, but less than 10,000, financial advisors.

[9] Tier 3 = Carriers with less than $4 billion in assets; Dealers with less than 3,000 financial advisors.

[10] 15 U.S.C. 78q–1.

C. Self-Regulatory Organization's Statement on Comments on the Proposed Rule Change Received From Members, Participants, or Others

NSCC has not solicited or received written comments relating to the proposed rule change. NSCC will notify the Commission of any written comments it receives.

III. Date of Effectiveness of the Proposed Rule Change and Timing for Commission Action

The foregoing rule change has become effective upon filing pursuant to Section 19(b)(3)(A)(ii) of the Act [11] and Rule 19b–4(f)(2) [12] thereunder because the proposed rule change establishes or changes a due, fee, or other charge applicable only to a member. At any time within 60 days of the filing of the proposed rule change, the Commission summarily may temporarily suspend such rule change if it appears to the Commission that such action is necessary or appropriate in the public interest, for the protection of investors, or otherwise in furtherance of the purposes of the Act.

IV. Solicitation of Comments

Interested persons are invited to submit written data, views, and arguments concerning the foregoing, including whether the proposed rule change is consistent with the Act. Comments may be submitted by any of the following methods:

Electronic Comments

- Use the Commission's Internet comment form (*http://www.sec.gov/rules/sro.shtml*) or
- Send an e-mail to *rule-comments@sec.gov*. Please include File No. SR–NSCC–2011–06 on the subject line.

Paper Comments

- Send paper comments in triplicate to Elizabeth M. Murphy, Secretary, Securities and Exchange Commission, 100 F Street, NE., Washington, DC 20549–1090.

All submissions should refer to File No. SR–NSCC–2011–06. This file number should be included on the subject line if e-mail is used. To help the Commission process and review your comments more efficiently, please use only one method. The Commission will post all comments on the Commission's Internet Web site (*http://www.sec.gov/rules/sro.shtml*). Copies of the submission, all subsequent amendments, all written statements with respect to the proposed rule change that are filed with the Commission, and all written communications relating to the proposed rule change between the Commission and any person, other than those that may be withheld from the public in accordance with the provisions of 5 U.S.C. 552, will be available for Web site viewing and printing in the Commission's Public Reference Room, 100 F Street, NE., Washington, DC 20549, on official business days between the hours of 10 a.m. and 3 p.m. Copies of such filings also will be available for inspection and copying at NSCC's principal office and NSCC's Web site at *http://www.dtcc.com/downloads/legal/rule_filings/2011/nscc/2011–06.pdf*. All comments received will be posted without change; the Commission does not edit personal identifying information from submissions. You should submit only information that you wish to make available publicly. All submissions should refer to File No. SR–NSCC–2011–06 and should be submitted on or before August 29, 2011.

For the Commission by the Division of Trading and Markets, pursuant to delegated authority.[13]

Elizabeth M. Murphy,

Secretary.

[FR Doc. 2011–19980 Filed 8–5–11; 8:45 am]

BILLING CODE 8011–01–P

SECURITIES AND EXCHANGE COMMISSION

[Release No. 34–65020; File No. SR–NASDAQ–2011–099]

Self-Regulatory Organizations; The NASDAQ Stock Market LLC; Notice of Filing and Immediate Effectiveness of Proposed Rule To Amend Fees Assessed for Use of NASDAQ Pre-Trade Risk Management

August 3, 2011.

Pursuant to Section 19(b)(1) of the Securities Exchange Act of 1934 (''Act'') [1] and Rule 19b–4 thereunder,[2] notice is hereby given that, on July 25, 2011, The NASDAQ Stock Market LLC (the ''Exchange'' or ''NASDAQ'') filed with the Securities and Exchange Commission (the ''Commission'') the proposed rule change as described in Items I, II, and III, below, which Items have been prepared by NASDAQ. The Commission is publishing this notice to solicit comments on the proposed rule change from interested persons.

I. Self-Regulatory Organization's Statement of the Terms of Substance of the Proposed Rule Change

NASDAQ is proposing to amend fees assessed for use of NASDAQ Pre-trade Risk Management (''PRM'') and to make a minor technical correction. NASDAQ will implement the amended fees effective August 1, 2011.

The text of the proposed rule change is below. Proposed new language is in italics; proposed deletions are in brackets.

7016. Nasdaq Risk Management

(a) No change.

(b) Users of NASDAQ Pre-trade Risk Management (''PRM'') will be assessed [a charge of $100 per month per PRM-enabled port.] *a monthly fee based on the following table, and such fees will not exceed $25,000 per member firm, per month:*

Port tiers	*Number of PRM-enabled ports*	*Monthly fee*
Tier 1	*50 or more*	*$400 per port, per month.*
Tier 2	*20 to 49*	*500 per port, per month.*
Tier 3	*5 to 19*	*550 per port, per month.*
Tier 4	*1 to 4*	*600 per port, per month.*

(c) Users of PRM services specified below will be assessed the following charges in addition to the applicable PRM-enabled port charges:

PRM Modules—[$500 per month per PRM Module] *No charge*

Aggregate Total Checks—[$0.025 per each eligible side, capped at $2,000 per month per PRM Module] *No charge*

PRM Workstation Add-ons to an $100 per each PRM Workstation Add-on per month [existing NASDAQ Workstation or beginning July 2006 (no charge for

[11] *Supra* note 2.

[12] *Supra* note 3.

[13] 17 CFR 200.30–3(a)(12).

[1] 15 U.S.C. 78s(b)(1).

[2] 17 CFR 240.19b–4.

any PRM WeblinkACT 2.0 Workstation Add-ons in April, May and June 2008]

* * * * *

II. Self-Regulatory Organization's Statement of the Purpose of, and Statutory Basis for, the Proposed Rule Change

In its filing with the Commission, NASDAQ included statements concerning the purpose of and basis for the proposed rule change and discussed any comments it received on the proposed rule change. The text of these statements may be examined at the places specified in Item IV below. NASDAQ has prepared summaries, set forth in Sections A, B, and C below, of the most significant aspects of such statements.

A. Self-Regulatory Organization's Statement of the Purpose of, and the Statutory Basis for, the Proposed Rule Change

1. Purpose

NASDAQ is proposing to amend the fees assessed users of NASDAQ Pre-Trade Risk Management. PRM provides member firms with the ability to set a wide range of parameters for orders to facilitate pre-trade protection by creating a PRM module defined to represent checks desired. Using PRM, firms can increase controls on their trading activity and the trading activity of their clients and customers at the order level, including the opportunity to prevent potentially erroneous transactions. PRM validates orders entered on PRM-enabled ports prior to allowing those orders into its matching engine and, using parameters set by the subscriber, determines if the order should be sent for fulfillment. If PRM rejects an order, it alerts the member firm and provides it with clearly-defined reasons for the rejection.[3] These alerts are sent on Execution and Order/Message DROP copy lines/reports.

PRM users may choose to set PRM Order Checks, Aggregate Total Checks within a PRM Module, and subscribe to PRM Workstation Add-ons to [sic] an existing NASDAQ Workstation or WeblinkACT 2.0. PRM manages risk by checking each order, before it is accepted into the system, against certain parameters pre-specified by the user within a module, such as maximum order size or value, order type restrictions, market session restrictions (pre/post market), security restrictions, including per-security limits, restricted stock list, and certain other criteria. These checks are in addition to the Fat Finger Check, which is available for all orders submitted through a RASH/FIX PRM-enabled port.[4] In order for a member firm to subscribe, at least one PRM Module per market participant ID (''MPID'') is required, but a user may have multiple PRM Module subscriptions per MPID, depending on the type and number of ports designated as PRM ports.[5] A PRM Module is created to validate individual orders against pre-specified parameters. Aggregate Total Checks allow users to limit overall daily trading activity based on Buy, Sell, and/or Net trading limits. These daily trading activity limits may be established at an aggregate limit and/or security specific limit per PRM Module. Member firms may subscribe to the PRM Workstation Add-on to [sic] an existing NASDAQ Workstation or WeblinkACT 2.0 for a fee.

NASDAQ is proposing to change the means by which PRM fees are assessed under Rules 7016(b) and (c). Currently, under Rule 7016(b) subscribers pay a nominal fee of $100 per PRM-enabled port, and $500 per month, per PRM Module. Subscribers must subscribe to at least one PRM Module, but often subscribe to more than one PRM Module so that firm may monitor separate order flow sent through a single PRM-enabled port. In addition, a separate fee for Aggregate Total Checks is assessed at a rate of $.025 per each eligible side and is limited to a total of $2,000 per module, per month. As such, combined fees for a single PRM-enabled port often exceed the minimum fee of $600 per month.

In lieu of assessing module-based and order-based fees under Rule 7016(c), NASDAQ is proposing to eliminate the fee for these two services and increase the per-port fee assessed under Rule 7016(b). The new monthly port-based fee is tiered, decreasing as the number of PRM-enabled ports subscribed increase and the next tier is reached. NASDAQ is also proposing to limit the fees assessed a member firm under the new tiered fee structure to a total of $25,000 per month. Although NASDAQ is proposing to eliminate the fees assessed for PRM Modules and Aggregate Total Check, both services will continue to be available to subscribers with no change to the service provided.

NASDAQ believes that assessing PRM fees by port will simplify the billing process and either result in no increase in fees as assessed under the current rules, or more likely result in a fee decrease for the majority of current subscribers. For example, a subscriber to a single PRM-enabled port with a single PRM Module subscription would incur the same fee under both the proposed PRM-enabled port fee and the current fee regime—$600 per month. A subscriber to five PRM-enabled ports with five PRM Modules would be assessed a fee of $3,000 per month under the current rules, whereas the same subscriber would only pay $2,750 per month under the proposed rules. A subscriber with five PRM-enabled ports and a total of ten PRM Modules would pay $5,500 per month under the current rules, yet only $2,750 per month under the proposed fees. This analysis does not account for the additional savings that subscribers to Aggregate Total Checks will realize under the proposed new fees.

Last, NASDAQ is deleting language concerning a fee holiday from PRM Workstation Add-ons fees from the table under Rule 7016(c), since it concerns a limited timeframe that has since expired.

2. Statutory Basis

NASDAQ believes that the proposed rule change is consistent with Section 6(b)(4) of the Act[6] in that it provides for the equitable allocation of reasonable dues, fees and other charges among members and issuers and other persons using any facility or system which the NASDAQ operates or controls, and it does not unfairly discriminate between customers, issuers, brokers or dealers. The amended fee schedule applies to all subscribers equally based on the number of ports subscribed. The proposed amended fees provide a more efficient means of billing, thus reducing administrative costs. The proposed changes may also provide incentive for member firms to subscribe to the service and utilize additional PRM features (*i.e.,* Total Aggregate Checks) given the elimination of transaction-based fee for Total Aggregate Checks, the elimination of the monthly PRM Module fee, and the tiered PRM fee structure with a $25,000 monthly fee cap, per member firm. The proposed amended fees will continue to cover the costs associated with separately offering the service,

[3] For example, PRM provides a ''Fat Finger Check,'' which allows a user to compare price instructions on incoming orders against the current displayed size and price in the market. If the order is not in line with the displayed price and size, the order will be rejected before it can execute. Users can set order limits at several levels to ensure that clearly erroneous orders never execute.

[4] *Id.*

[5] A member using FIX or Rash ports can configure its PRM Module to pre-trade-manage a subscriber's order flow for a specified MPID and PRM-enabled port, or for an account within an MPID. A member using OUCH ports can configure its PRM Module to pre-trade-manage a subscriber's order flow for a specified port.

[6] 15 U.S.C. 78f(b)(4).

responding to customer requests, configuring NASDAQ's systems, programming to user specifications, and administering the service, among other things, and may provide NASDAQ with a profit to the extent costs are covered.

NASDAQ also believes that the proposed rule change is consistent with the provisions of Section 6(b)(5) of the Act [7] because it is designed to prevent fraudulent and manipulative acts and practices, to promote just and equitable principles of trade, to foster cooperation and coordination with persons engaged in facilitating transactions in securities, and to remove impediments to and perfect the mechanism of a free and open market and a national market system. PRM is designed to assist member firms in avoiding entry of erroneous orders by screening out those that exceed pre-determined limits, which otherwise may harm both the member firm and the quality of the markets. As such, PRM is an important compliance tool that members may use to help maintain the regulatory integrity of the markets. NASDAQ believes that the amendments to the fees assessed for PRM and its services may encourage more member firms to subscribe to this useful compliance tool.

B. Self-Regulatory Organization's Statement on Burden on Competition

NASDAQ does not believe that the proposed rule change will result in any burden on competition that is not necessary or appropriate in furtherance of the purposes of the Act, as amended.

C. Self-Regulatory Organization's Statement on Comments on the Proposed Rule Change Received From Members, Participants, or Others

Written comments were neither solicited nor received.

III. Date of Effectiveness of the Proposed Rule Change and Timing for Commission Action

The foregoing rule change has become effective pursuant to Section 19(b)(3)(A)(ii) of the Act [8] and subparagraph (f)(2) of Rule 19b-4 thereunder.[9] At any time within 60 days of the filing of the proposed rule change, the Commission summarily may temporarily suspend such rule change if it appears to the Commission that such action is necessary or appropriate in the public interest, for the protection of investors, or otherwise in furtherance of the purposes of the Act. If the Commission takes such action, the Commission shall institute proceedings to determine whether the proposed rule should be approved or disapproved.

IV. Solicitation of Comments

Interested persons are invited to submit written data, views, and arguments concerning the foregoing, including whether the proposed rule change is consistent with the Act. Comments may be submitted by any of the following methods:

Electronic Comments

- Use the Commission's Internet comment form (*http://www.sec.gov/rules/sro.shtml);* or
- Send an e-mail to *rule-comments@sec.gov.* Please include File Number SR–NASDAQ–2011–099 on the subject line.

Paper Comments

- Send paper comments in triplicate to Elizabeth M. Murphy, Secretary, Securities and Exchange Commission, 100 F Street, NE., Washington, DC 20549–1090.

All submissions should refer to File Number SR–NASDAQ–2011–099. This file number should be included on the subject line if e-mail is used. To help the Commission process and review your comments more efficiently, please use only one method. The Commission will post all comments on the Commission's Internet Web site (*http://www.sec.gov/rules/sro.shtml*). Copies of the submission, all subsequent amendments, all written statements with respect to the proposed rule change that are filed with the Commission, and all written communications relating to the proposed rule change between the Commission and any person, other than those that may be withheld from the public in accordance with the provisions of 5 U.S.C. 552, will be available for Web site viewing and printing in the Commission's Public Reference Room, 100 F Street, NE., Washington, DC 20549, on official business days between the hours of 10 a.m. and 3 p.m. Copies of the filing also will be available for inspection and copying at the principal office of the Exchange. All comments received will be posted without change; the Commission does not edit personal identifying information from submissions. You should submit only information that you wish to make available publicly. All submissions should refer to File Number SR–NASDAQ–2011–099 and should be submitted on or before August 29, 2011.

For the Commission, by the Division of Trading and Markets, pursuant to delegated authority.[10]

Elizabeth M. Murphy,

Secretary.

[FR Doc. 2011–20008 Filed 8–5–11; 8:45 am]

BILLING CODE 8011–01–P

[7] 15 U.S.C. 78f(b)(5).

[8] 15 U.S.C. 78s(b)(3)(a)(ii).

[9] 17 CFR 240.19b–4(f)(2).

[10] 17 CFR 200.30–3(a)(12).

SECURITIES AND EXCHANGE COMMISSION

[Release No. 34–65010; File No. SR–Phlx–2011–100]

Self-Regulatory Organizations; Notice of Filing and Immediate Effectiveness of Proposed Rule Change by NASDAQ OMX PHLX LLC Relating to Member and Member Organization Participation

August 2, 2011.

Pursuant to Section 19(b)(1) of the Securities Exchange Act of 1934 (''Act'') [1], and Rule 19b–4 [2] thereunder, notice is hereby given that on July 26, 2011, NASDAQ OMX PHLX LLC (''Phlx'' or ''Exchange'') filed with the Securities and Exchange Commission (''SEC'' or ''Commission'') the proposed rule change as described in Items I, II, and III, below, which Items have been prepared by the Exchange. The Commission is publishing this notice to solicit comments on the proposed rule change from interested persons.

I. Self-Regulatory Organization's Statement of the Terms of Substance of the Proposed Rule Change

The Exchange proposes to apply Exchange Rule 3211 entitled ''PSX Participant Registration'' to members and member organizations conducting an options business.

The text of the proposed rule change is available on the Exchange's Web site at *http://www.nasdaqtrader.com/micro.aspx?id=PHLXRulefilings,* at the principal office of the Exchange, and at the Commission's Public Reference Room.

II. Self-Regulatory Organization's Statement of the Purpose of, and Statutory Basis for, the Proposed Rule Change

In its filing with the Commission, the Exchange included statements concerning the purpose of and basis for the proposed rule change and discussed any comments it received on the proposed rule change. The text of these statements may be examined at the places specified in Item IV below. The Exchange has prepared summaries, set

[1] 15 U.S.C. 78s(b)(1).

[2] 17 CFR 240.19b–4.

forth in sections A, B, and C below, of the most significant aspects of such statements.

A. Self-Regulatory Organization's Statement of the Purpose of, and Statutory Basis for, the Proposed Rule Change

1. Purpose

The purpose of the proposed rule change is to apply Exchange Rule 3211, entitled ''PSX Participant Registration'' to members and member organizations transacting options. The Exchange proposes to clearly specify requirements for all members and member organizations to access the Exchange's trading system.

The Exchange currently requires PSX Participants to comply with certain requirements to access the Exchange's trading system as specified in Exchange Rule 3211.[3] The Exchange proposes to apply substantially the same requirements in new Exchange Rule 911 to members and member organizations transacting options, by eliminating paragraphs (a) through (c) in Exchange Rule 3211, located in the PSX Rules, and adopting new Exchange Rule 911, which is proposed to be located in the Rules of the Exchange, and making it applicable to all members of the Exchange. The Exchange proposes to add new Exchange Rule 911 to the list of Rules in Exchange Rule 3202, entitled ''Application of Other Rules of the Exchange,'' so that paragraphs (a) through (c) in Exchange Rule 911 would continue to apply to PSX Participants. Also, the Exchange proposes to rename Exchange Rule 3211 ''Sponsored Participants'' to accurately reflect the substance of the remaining language in 3211(d), which the Exchange would rename as paragraph ''a'' to reflect the removal of the previous paragraphs.

Today, the Exchange's trading system is accessible to all Exchange members and member organizations, transacting equities or options, that meet the registration, qualification and other membership requirements set forth in the Exchange Rules. The Exchange's trading system, for purposes of this Rule 911, shall include NASDAQ OMX PSX (''PSX''),[4] PHLX XL®[5] and the Floor Broker Management System (''FBMS''),[6] (collectively ''System'').[7]

Specifically, the Exchange proposes to apply the provisions of new proposed Rule 911 to options members and member organizations. The provisions in section (a) are clarifying amendments as options members are required to comply with these provisions today. For example, the obligation to register in paragraph (a) and to execute all applicable agreements applies today to option members.[8] The requirement to have a membership in or arrangement with a clearing agency also applies today to option members.[9] Compliance with all applicable Rules and procedures is specified in By-Law Article VI, Section 6–1 entitled ''Rights and Privileges'' and Section 6–12 entitled ''Dealing on the Exchange,'' which By-Laws apply to all Exchange members.[10] The maintenance of physical security of the equipment located on the premises of the member or member organization and improper use of the Exchange's System is also currently enumerated in the Rules which are applicable to options members.[11] The acceptance and settlement of trades effected by a member or member organization is delineated in the Rules today and applicable to option members.[12] The input of accurate information into the Exchange's System[13] and the effective date of a member or member organization's registration, are described in the Rules regarding registration of members and member organizations, which are applicable to option members.[14]

The member and member organization's continuing obligation to report any noncompliance with registration requirements is inferred today in the Exchange's Rules.[15] The Exchange believes that this provision in section (b) of proposed Rule 911 should be equally applied to option members as it is currently applicable to PSX Participants today.

Finally, the provision in section (c) to impose temporary restrictions upon the automated entry or updating of orders or quotes/orders as the Exchange may determine is not currently applicable to options members but only PSX members today. The Exchange is proposing to apply this provision to options members in order that the Exchange uniformly may apply its rules regarding System access to all members of the Exchange. The Exchange believes that this provision of the proposed Rule is necessary to protect the integrity of the Exchange's systems. For example, such temporary restrictions may be necessary to address a system problem at a particular member or member organization or at the Exchange, or an unexpected period of extremely high message traffic. The scope of any such restrictions shall be communicated to the affected options member or member organization in writing.

2. Statutory Basis

The Exchange believes that its proposal is consistent with Section 6(b) of the Act[16] in general, and furthers the objectives of Section 6(b)(5) of the Act[17] in particular, in that it is designed to promote just and equitable principles of trade, to remove impediments to and perfect the mechanism of a free and

[3] *See* Exchange Rule 3211 entitled ''PSX Participant Registration,'' which is applicable to PSX Participants.

[4] PSX is a cash equities electronic trading platform. Specifically, PSX is an open-access fully electronic integrated order display and execution system for NMS stocks.

[5] PHLX XL® is the Exchange's automated options trading system. This proposal refers to ''PHLX XL'' as the Exchange's automated options trading system. In May 2009 the Exchange enhanced the system and adopted corresponding rules referring to the system as ''Phlx XL II.'' *See* Securities Exchange Act Release No. 59995 (May 28, 2009), *74 FR 26750* (June 3, 2009) (SR–Phlx–2009–32). The Exchange intends to submit a separate technical proposed rule change that would change all references to the system from ''Phlx XL II'' to ''PHLX XL'' for branding purposes.

[6] FBMS is designed to enable floor brokers and/or their employees to enter, route, and report transactions stemming from options orders received on the Exchange. FBMS also is designed to establish an electronic audit trail for options orders represented and executed by floor brokers on the Exchange. *See* Exchange Rule 1080, commentary .06

[7] PSX Participants are not subject to this Rule, but are subject to Exchange Rule 3211. *See* Exchange Rule 3211.

[8] *See* Exchange Rules 600 (Registration), 604 (Registration and Termination of Registered Persons), 620 (Trading Floor Registration), 640 (Continuing Education for Registered Persons), 901 (Denials of and Conditions to Membership), Rule 908 (Rights and Privileges of A–1 Permits) and Rule 910 (Qualification as Member Organization), among other Rules.

[9] *See* Exchange Rule 59 (Deliveries through Registered Clearing Agencies).

[10] *See also* Exchange Rule 1080 (Phlx XL and PHLX XL II) describes PHLX XL and the obligations of options members.

[11] *See* Exchange By-Law Article VI, Section 6–3 (Use of Facilities of Exchange), Rule 606 (Communication and Equipment), Option Floor Procedure Advice F–31 (Communications and Equipment), By-Law Article VII, Sec. 7–3 (Membership Qualifications) and Exchange Rule 1080 (Phlx XL and PHLX XL II) describes PHLX XL and the obligations of options members.

[12] *See* Exchange Rules 1035 (Acceptance of Bid or Offer), 1044 (Delivery and Payment) and 1052 (Responsibility of Clearing Options Members for Exchange Options Transactions). These Rules are applicable to options members today.

[13] *See* Exchange Rule 1053 (Filing Of Trade Information), 1055 (Reporting of Compared Trades to Options Clearing Corporation) and 1063 (Responsibilities of Floor Brokers). These Rules are applicable to options members today.

[14] *See* Exchange Rules 600 (Registration), 604 (Registration and Termination of Registered Persons) and 620 (Trading Floor Registration). These Rules are applicable to options members today.

[15] *See* Exchange Rule 908 (Rights and Privileges of A–1 Permits) which provides that permit holders must abide by the By-Laws and Rules of the Exchange.

[16] 15 U.S.C. 78f(b).

[17] 15 U.S.C. 78f(b)(5).

open market and a national market system, and, in general to protect investors and the public interest, by further clarifying the Exchange's Rules with respect to its members and member organizations transacting options. The Exchange believes that equally applying the rule to both options members and member organizations and PSX Participants further protects the public interest.

The Exchange believes that this proposed rule would, in part, clarify the obligations of an option member or member organization with respect to the provisions in section (a)(1) through (6) of the proposed Rule. As specified herein, the Exchange believes that option members today are subject to these requirements and the proposal merely serves to clarify these obligations in a single Rule. These requirements in section (a) of the proposed rule seek to ensure that the option members and member organizations are required to maintain certain standards to protect the integrity of the Exchange's systems, as is the case today for PSX Participants.

The Exchange believes that an options member and member organization's continuing obligation to report any noncompliance with registration requirements is inferred in the Rules today as described herein. The application of proposed Rule 911 to option members would adopt a clear Rule for option members regarding their obligation to report noncompliance with any registration requirement, as is the case today for PSX Participants. The Exchange believes this provision is instrumental in assisting the Exchange with its regulatory responsibilities.

Finally, the Exchange proposes to add a new provision, that it may impose temporary restrictions upon the automated entry or updating of orders or quotes/orders as the Exchange may determine to be necessary to protect the integrity of the Exchange's systems, for option members. This provision is applicable today to PSX Participants. The Exchange believes that this ability to impose a temporary restriction upon members and member organizations transacting options would assist the Exchange in maintaining the integrity of the market and protecting investors and the public interest.

B. Self-Regulatory Organization's Statement on Burden on Competition

The Exchange does not believe that the proposed rule change will impose any burden on competition not necessary or appropriate in furtherance of the purposes of the Act.

C. Self-Regulatory Organization's Statement on Comments on the Proposed Rule Change Received From Members, Participants, or Others

No written comments were either solicited or received.

III. Date of Effectiveness of the Proposed Rule Change and Timing for Commission Action

Because the foregoing proposed rule change does not: (i) Significantly affect the protection of investors or the public interest; (ii) impose any significant burden on competition; and (iii) become operative for 30 days after the date of the filing, or such shorter time as the Commission may designate, it has become effective pursuant to 19(b)(3)(A) of the Act [18] and Rule 19b–4(f)(6) [19] thereunder.

At any time within 60 days of the filing of the proposed rule change, the Commission summarily may temporarily suspend such rule change if it appears to the Commission that such action is necessary or appropriate in the public interest, for the protection of investors, or otherwise in furtherance of the purposes of the Act. If the Commission takes such action, the Commission shall institute proceedings to determine whether the proposed rule should be approved or disapproved.

IV. Solicitation of Comments

Interested persons are invited to submit written data, views, and arguments concerning the foregoing, including whether the proposed rule change is consistent with the Act. Comments may be submitted by any of the following methods:

Electronic Comments

- Use the Commission's Internet comment form (*http://www.sec.gov/rules/sro.shtml);* or
- Send an e-mail to *rule-comments@sec.gov.* Please include File Number SR–Phlx–2011–100 on the subject line.

Paper Comments

- Send paper comments in triplicate to Elizabeth M. Murphy, Secretary, Securities and Exchange Commission, 100 F Street, NE., Washington, DC 20549–1090.

All submissions should refer to File Number SR–Phlx–2011–100. This file number should be included on the subject line if e-mail is used. To help the Commission process and review your comments more efficiently, please use only one method. The Commission will post all comments on the Commission's Internet Web site (*http://www.sec.gov/rules/sro.shtml).* Copies of the submission, all subsequent amendments, all written statements with respect to the proposed rule change that are filed with the Commission, and all written communications relating to the proposed rule change between the Commission and any person, other than those that may be withheld from the public in accordance with the provisions of 5 U.S.C. 552, will be available for Web site viewing and printing in the Commission's Public Reference Room, 100 F Street, NE., Washington, DC 20549, on official business days between the hours of 10 a.m. and 3 p.m. Copies of the filing also will be available for inspection and copying at the principal office of the Exchange. All comments received will be posted without change; the Commission does not edit personal identifying information from submissions. You should submit only information that you wish to make available publicly. All submissions should refer to File Number SR–Phlx–2011–100 and should be submitted on or before August 29, 2011.

For the Commission, by the Division of Trading and Markets, pursuant to delegated authority.[20]

Elizabeth M. Murphy,

Secretary.

[FR Doc. 2011–19991 Filed 8–5–11; 8:45 am]

BILLING CODE 8011–01–P

[18] 15 U.S.C. 78s(b)(3)(A).

[19] 17 CFR 240.19b–4(f)(6). In addition, Rule 19b–4(f)(6) requires a self-regulatory organization to give the Commission written notice of its intent to file the proposed rule change at least five business days prior to the date of filing of the proposed rule change, or such shorter time as designated by the Commission. The Exchange has satisfied this requirement.

[20] 17 CFR 200.30–3(a)(12).

SECURITIES AND EXCHANGE COMMISSION

[Release No. 34–65015; File No. SR–MSRB–2011–08]

Self-Regulatory Organizations; Municipal Securities Rulemaking Board; Notice of Filing of Proposed New Rule A–11, on Municipal Advisor Assessments, and New Form A–11–Interim

August 2, 2011.

Pursuant to Section 19(b)(1) of the Securities Exchange Act of 1934 (the

''Act'') [1] and Rule 19b–4 thereunder,[2] notice is hereby given that on July 26, 2011, the Municipal Securities Rulemaking Board (''Board'' or ''MSRB'') filed with the Securities and Exchange Commission (''SEC'' or ''Commission'') the proposed rule change as described in Items I, II, and III below, which Items have been prepared by the MSRB. The Commission is publishing this notice to solicit comments on the proposed rule change from interested persons.

I. Self-Regulatory Organization's Statement of the Terms of Substance of the Proposed Rule Change

The MSRB is filing with the SEC a proposed rule change consisting of (i) Proposed new Rule A–11, on municipal advisor assessments, and (ii) new Form A–11–Interim (the ''proposed rule change''). The MSRB requests that the proposed rule change be made effective October 1, 2011.

The text of the proposed rule change is available on the MSRB's Web site at *http://www.msrb.org/Rules-and-Interpretations/SEC-Filings/2011-Filings.aspx,* at the MSRB's principal office, and at the Commission's Public Reference Room.

II. Self-Regulatory Organization's Statement of the Purpose of, and Statutory Basis for, the Proposed Rule Change

In its filing with the Commission, the MSRB included statements concerning the purpose of and basis for the proposed rule change and discussed any comments it received on the proposed rule change. The text of these statements may be examined at the places specified in Item IV below. The Board has prepared summaries, set forth in Sections A, B, and C below, of the most significant aspects of such statements.

A. Self-Regulatory Organization's Statement of the Purpose of, and Statutory Basis for, the Proposed Rule Change

1. Purpose

The proposed rule change consists of new Rule A–11, on municipal advisor assessments, and new Form A–11–Interim. The purpose of the proposed rule change is to levy a reasonable interim assessment to defray a portion of the costs and expenses of operating and administering the MSRB, including in particular the increased costs and expenses attributable to the regulation of municipal advisors that the MSRB began to incur upon being vested with rulemaking authority in this area under the Dodd-Frank Wall Street Reform and Consumer Protection Act.[3] The MSRB expects the interim assessment to remain in effect in the form proposed in the proposed rule change for a limited period of time during which the MSRB would examine the nature of the municipal advisory activities undertaken by municipal advisors as well as the manner and level of compensation received by municipal advisors for such municipal advisory activities (the ''MSRB municipal advisor study'').[4] Based on the MSRB's findings, the MSRB would then consider whether to replace the interim assessment with a permanent form of assessment on municipal advisors that would, together with other MSRB assessments payable by municipal advisors, brokers, dealers and municipal securities dealers, provide for reasonable assessments that are fairly and equitably apportioned among all market participants subject to MSRB regulation and that do not impose an undue burden on small municipal advisors.

The interim assessment under proposed Rule A–11 would consist of an annual assessment equal to $300 for each assessable professional reported or required to be reported by a municipal advisor to the MSRB on Form A–11–Interim for each fiscal year. Completed Form A–11–Interim and payment of the interim assessment would be due by November 30 of each year. Form A–11–Interim would be completed and submitted, and the interim assessment would be paid, in the manner set forth in the *Instructions for Interim Municipal Advisor Assessment and Form A–11–Interim.*

For purposes of the interim assessment, an assessable professional of a municipal advisor would, pursuant to proposed Rule A–11(b)(i), consist of any natural person who is an associated person of the municipal advisor who has received compensation or other payments from the municipal advisor (excluding reimbursement for out-of-pocket expenses) includable in such person's gross income for federal income tax purposes in the amount of $10,000 or more during the fiscal year of the MSRB for which the municipal advisor is submitting Form A–11–Interim and who provides services in connection with the municipal advisor's municipal advisory activities as defined in Rule D–13. Such services include, but are not limited to:

(A) Engaging in municipal advisory business [5] with a municipal entity or obligated person;

(B) soliciting [6] municipal advisory business with a municipal entity or obligated person on its own behalf or soliciting third-party business; [7]

(C) providing research or analytical services to other personnel of the municipal advisor engaged in the services described in paragraph (A) or (B) above or to clients of the municipal advisor, where such research or analytic services are related to the services described in paragraph (A) or (B) above;

(D) acting as supervisor of any person described in paragraph (A), (B) or (C) above with respect to such person's services as described in paragraph (A), (B) or (C) above;

(E) acting as supervisor of any person described in paragraph (D) above up through and including the Chief Executive Officer or similarly situated official; or

(F) serving as a member of the municipal advisor's executive or management committee or similarly situated officials, if any.

Notwithstanding the foregoing, a municipal advisor would not be required to include on Form A–11–Interim as an assessable professional any associated person (i) Who otherwise qualifies as an assessable professional if such associated person is included on Form A–11–Interim for such fiscal year as an assessable professional of another municipal advisor that controls, is

[1] 15 U.S.C. 78s(b)(1).

[2] 17 CFR 240.19b–4.

[3] Public Law 111–203.

[4] Concurrent with the filing of this proposed rule change, the MSRB published for comment a draft amendment to proposed Rule A–11 and draft Form A–11–Survey pursuant to which the MSRB would collect the necessary information from municipal advisors to undertake such examination. *See* MSRB Notice 2011–34 (July 26, 2011). The MSRB would file the draft Rule A–11 amendment and draft Form A–11–Survey with the Commission prior to undertaking such collection of information.

[5] Proposed Rule A–11(b)(ii) would define municipal advisory business as the provision of advice to or on behalf of a municipal entity or an obligated person with respect to municipal financial products or the issuance of municipal securities.

[6] Under proposed Rule A–11(b)(iii), an associated person of a municipal advisor would be viewed as soliciting municipal advisory business if the associated person undertakes any direct or indirect communication with a municipal entity or obligated person for the purpose of obtaining or retaining: (A) Municipal advisory business for such municipal advisor with a municipal entity or obligated person; or (B) third-party business.

[7] Proposed Rule A–11(b)(iv) would define third-party business as an engagement by a municipal entity of another person that does not control, is not controlled by, or is not under common control with the person soliciting such engagement, where such other person is: (A) A broker, dealer, municipal securities dealer, or municipal advisor engaging or seeking an engagement with such municipal entity in connection with municipal financial products or the issuance of municipal securities; or (B) an investment adviser (as defined in section 202 of the Investment Advisers Act of 1940) providing or seeking to provide investment advisory services to or on behalf of such municipal entity.

controlled by, or is under common control with such municipal advisor, or (ii) whose functions are solely clerical or ministerial.

Proposed Form A–11–Interim would require that municipal advisors provide information about the number of assessable professionals who, during the fiscal year for which the assessment is calculated, were principal/supervisory personnel or other advisory personnel. Principal/supervisory personnel would consist of any assessable professional who is either described in paragraph (D), (E) or (F) of the definition of assessable professional or who is a partner or other equity owner of the municipal advisor firm having a cumulative ownership interest representing at least 2.5% of the firm. All other assessable professionals would be reported as other advisory personnel. The interim assessment would be calculated based on the sum of principal/supervisory personnel and other advisory personnel.[8] Because of the gross income threshold in the definition of assessable professional, municipal advisors that generate revenues of less than $10,000 in connection with their municipal advisory activities during the fiscal year typically would not have any assessable professionals to report for such fiscal year and therefore would not be required to pay the interim assessment.[9]

The MSRB requests that the proposed rule change be made effective October 1, 2011, which is the first day of the MSRB's fiscal year. Municipal advisors would be required to submit completed Form A–11–Interim and to make payment of the interim assessment by November 30, 2011, based on information for the period from October 1, 2010 through September 30, 2011. If in any subsequent fiscal year the MSRB has not yet replaced the interim assessment with a permanent form of assessment as described above, municipal advisors would be required to submit completed Form A–11–Interim and to make payment of the interim assessment by November 30 of such fiscal year based on information for the prior fiscal year.

2. Statutory Basis

The MSRB believes that the proposed rule change is consistent with Section 15B(b)(2)(J) of the Securities Exchange Act of 1934, as amended (the ''Exchange Act''), which provides that the MSRB's rules shall:

> provide that each municipal securities broker, municipal securities dealer, and municipal advisor shall pay to the Board such reasonable fees and charges as may be necessary or appropriate to defray the costs and expenses of operating and administering the Board.

In addition, Section 15B(b)(2)(L)(iv) of the Exchange Act requires that rules adopted by the MSRB:

> not impose a regulatory burden on small municipal advisors that is not necessary or appropriate in the public interest and for the protection of investors, municipal entities, and obligated persons, provided that there is robust protection of investors against fraud.

The proposed rule change would establish an interim assessment on municipal advisors that would help to defray a portion of the costs and expenses of operating and administering the MSRB's regulatory and related activities in connection with municipal advisors until such time as a permanent assessment is established based on the planned MSRB municipal advisor study described above. Although the amounts raised through the interim assessment would not be sufficient to pay all on-going costs of regulation of municipal advisors and also would be insufficient to cover costs already incurred in connection with the regulation of municipal advisors since the MSRB commenced such regulatory activities on October 1, 2010, the MSRB believes that it is reasonable and appropriate to impose the interim assessment pending establishment of the final form of municipal advisor assessment.

In approving a 2010 MSRB proposal to increase the MSRB's transaction fee and to establish a new technology fee payable by brokers, dealers and municipal securities dealers,[10] the Commission recognized ''the concerns raised by some commenters that the increase in transaction fees and the new technology fee will be used to subsidize municipal advisor regulation'' and noted that the MSRB had taken certain initial steps to assess municipal advisor fees [11] and expected to assess other fees on municipal advisors as appropriate. Currently, under MSRB Rule A–13, brokers, dealers and municipal securities dealers pay an underwriting fee of $.03 per $1000 par value of municipal securities purchased in a primary offering (with certain exceptions), a transaction fee of $.01 per $1000 par value of sale transactions of municipal securities (with certain exceptions), and a technology fee of $1 for each sale transaction of municipal securities, in addition to an initial fee of $100 under MSRB Rule A–12 and an annual fee of $500 under MSRB Rule A–14. For the MSRB fiscal year ended September 30, 2010, the underwriting fee generated $13,984,780 and the transaction fee generated $6,940,551.[12] The technology fee became effective on January 1, 2011 and therefore the MSRB did not generate any revenue from this fee for the MSRB fiscal year ended September 30, 2010.[13] In addition, for the MSRB fiscal year ended September 30, 2010, the initial fee generated $8,500 and the annual fee generated $1,010,321.

Municipal advisors do not pay the underwriting, transaction or technology fee described above. The payment of the initial fee became obligatory for municipal advisors on January 1, 2011 and, as of July 22, 2011, approximately 495 municipal advisors not previously registered with the MSRB have paid the initial fee in connection with registering with the MSRB as municipal advisors, generating approximately $49,500 from these new municipal advisor registrants.[14] The payment of the annual fee also became obligatory for municipal advisors on January 1, 2011 and, as of July 22, 2011, these newly registered municipal advisors have paid the annual fee in connection with their first year as registered municipal advisors in an aggregate amount of approximately $247,500. The MSRB expects that, together with the initial fee and annual fee, the proposed interim assessment payable by municipal advisors would

[8] Proposed Form A–11–Interim also would require that municipal advisors provide information about the number of personnel at the firm that are engaged solely in non-municipal advisory activities. This information would be used to better understand the extent to which municipal advisory activities represent only a portion of firms' overall activities but would not be used to calculate the interim assessment.

[9] All municipal advisors would be required to submit completed Form A–11–Interim, even if such municipal advisors have no assessable professionals to report.

[10] *See* Exchange Act Release No. 63621 (File No. SR–MSRB–2010–10) (December 29, 2010) (the ''2010 Dealer Fee Order'').

[11] *See* Exchange Act Release No. 63313 (File No. SR–MSRB–2010–14) (November 12, 2010) (the ''2010 Municipal Advisor Fee Order''). Municipal advisors pay an initial fee of $100 under MSRB Rule A–12 and an annual fee of $500 under MSRB Rule A–14, both amounts being equal to the annual and initial fees paid by brokers, dealers and municipal securities dealers under those rules.

[12] The amount of the transaction fee was increased from $.005 per $1000 par value of sale transactions to .01 per $1000 par value of sale transactions beginning January 1, 2011. The MSRB previously estimated that this increase in the transaction fee would generate an estimated $7 million of additional revenue annually. *See* 2010 Dealer Fee Order.

[13] The MSRB previously estimated that the new technology fee would generate an estimated $10 million of revenue annually. *See* 2010 Dealer Fee Order.

[14] The amount generated from the initial fee is expected to be significantly lower in future years since such fee is payable by each municipal advisor only once upon initial registration with the MSRB.

generate well under 10 percent of the MSRB's total annual revenue in the fiscal year beginning October 1, 2011.[15] Thus, the MSRB believes that the burden on municipal advisors of the proposed interim assessment would be reasonable and appropriate and would be relatively small compared to the burden of fees and assessments paid by brokers, dealers and municipal securities dealers.

The amount of the interim assessment payable by each municipal advisor firm would be dependent on the number of assessable professionals of the firm and therefore would result in lower assessments for smaller municipal advisor firms and would bear a reasonable relationship with the level of municipal advisory activities undertaken by each municipal advisor firm. In addition, as noted above, because of the gross income threshold in the definition of assessable professional, municipal advisors that generate revenues of less than $10,000 in connection with their municipal advisory activities during the fiscal year typically would not have any assessable professionals to report for such fiscal year and therefore would not be required to pay the interim assessment. Accordingly, the interim assessment would minimize the regulatory burden on small municipal advisors.

B. Self-Regulatory Organization's Statement on Burden on Competition

The MSRB does not believe that the proposed rule change will impose any burden on competition not necessary or appropriate in furtherance of the purposes of the Exchange Act since it would apply equally to all municipal advisors based on the number of assessable professionals of each firm.

C. Self-Regulatory Organization's Statement on Comments on the Proposed Rule Change Received From Members, Participants, or Others

Written comments were neither solicited nor received on the proposed rule change.

III. Date of Effectiveness of the Proposed Rule Change and Timing for Commission Action

Within 45 days of the date of publication of this notice in the **Federal Register** or within such longer period (i) as the Commission may designate up to 90 days of such date if it finds such longer period to be appropriate and publishes its reasons for so finding or (ii) as to which the self-regulatory organization consents, the Commission will:

(A) By order approve or disapprove such proposed rule change, or

(B) institute proceedings to determine whether the proposed rule change should be disapproved.

IV. Solicitation of Comments

Interested persons are invited to submit written data, views, and arguments concerning the foregoing, including whether the proposed rule change is consistent with the Act. Comments may be submitted by any of the following methods:

Electronic Comments

- Use the Commission's Internet comment form (*http://www.sec.gov/rules/sro.shtml*); or
- Send an e-mail to *rule-comments@sec.gov*. Please include File Number SR–MSRB–2011–08 on the subject line.

Paper Comments

- Send paper comments in triplicate to Elizabeth M. Murphy, Secretary, Securities and Exchange Commission, 100 F Street, NE., Washington, DC 20549–1090.

All submissions should refer to File Number SR–MSRB–2011–08. This file number should be included on the subject line if e-mail is used. To help the Commission process and review your comments more efficiently, please use only one method. The Commission will post all comments on the Commission's Web site (*http://www.sec.gov/rules/sro.shtml*). Copies of the submission, all subsequent amendments, all written statements with respect to the proposed rule change that are filed with the Commission, and all written communications relating to the proposed rule change between the Commission and any person, other than those that may be withheld from the public in accordance with the provisions of 5 U.S.C. 552, will be available for Web site viewing and printing in the Commission's Public Reference Room, 100 F Street, NE., Washington, DC 20549, on official business days between the hours of 10 a.m. and 3 p.m. Copies of such filing also will be available for inspection and copying at the MSRB's offices. All comments received will be posted without change; the Commission does not edit personal identifying information from submissions. You should submit only information that you wish to make available publicly. All submissions should refer to File Number SR–MSRB–2011–08 and should be submitted on or before August 29, 2011.

For the Commission, by the Division of Trading and Markets, pursuant to delegated authority.[16]

Elizabeth M. Murphy,

Secretary.

[FR Doc. 2011–19992 Filed 8–5–11; 8:45 am]

BILLING CODE 8011–01–P

[15] Approximately 185 brokers, dealers and municipal securities dealers previously registered with the MSRB as such have also registered with the MSRB as municipal advisors as of July 22, 2011 and such firms also would be subject to the proposed interim assessment.

[16] 17 CFR 200.30–3(a)(12).

SOCIAL SECURITY ADMINISTRATION

Agency Information Collection Activities: Proposed Request and Comment Request

The Social Security Administration (SSA) publishes a list of information collection packages requiring clearance by the Office of Management and Budget (OMB) in compliance with Public Law 104–13, the Paperwork Reduction Act of 1995, effective October 1, 1995. This notice includes revisions of OMB-approved information collections.

SSA is soliciting comments on the accuracy of the agency's burden estimate; the need for the information; its practical utility; ways to enhance its quality, utility, and clarity; and ways to minimize burden on respondents, including the use of automated collection techniques or other forms of information technology. Mail, e-mail, or fax your comments and recommendations on the information collection(s) to the OMB Desk Officer and SSA Reports Clearance Officer at the following addresses or fax numbers.

(OMB), Office of Management and Budget, Attn: Desk Officer for SSA, Fax: 202–395–6974, E-mail address: *OIRA_Submission@omb.eop.gov.*

(SSA), Social Security Administration, DCBFM, Attn: Reports Clearance Officer, 1333 Annex Building, 6401 Security Blvd., Baltimore, MD 21235, Fax: 410–965–6400, E-mail address: *OPLM.RCO@ssa.gov.*

I. The information collection below is pending at SSA. SSA will submit it to OMB within 60 days from the date of this notice. To be sure we consider your comments, we must receive them no later than October 7, 2011. Individuals can obtain copies of the collection instrument by calling the SSA Reports Clearance Officer at 410–965–8783 or by writing to the above e-mail address.

SSI Notice of Interim Assistance Reimbursement (IAR)—0960–0546.

Section 1631(g) of the *Social Security Act* authorizes SSA to reimburse an IAR agency from an individual's retroactive Supplemental Security Income (SSI) payment for assistance the IAR agency gave the individual while an SSI claim was pending or SSI payments were suspended or terminated. The State or local agency needs an IAR agreement with SSA to participate in the IAR program. The individual receiving the IAR payment signs an authorization form with an IAR agency to allow SSA to repay the IAR agency for funds paid in advance prior to SSA's determination on the individual's claim. The authorization represents the individual's intent to file for SSI, if they did not file an application prior to SSA receiving the authorization. Agencies who wish to enter into an IAR agreement with SSA need to meet the following requirements:

(a) *Reporting Requirements*—Each IAR agency agrees to:

(1) Notify SSA of receipt of an authorization for initial claims or cases they are appealing, and submit a copy of the authorization either through a manual or electronic (eIAR) process;

(2) Inform SSA of the amount of reimbursement;

(3) Submit a written request for dispute resolution on a determination;

(4) Notify SSA of interim assistance paid (using the SSA–8125 or the SSA–L8125–F6);

(5) Inform SSA of any deceased claimants who participated in the IAR program; and

(6) Review and sign an agreement with SSA.

(b) *Recordkeeping Requirements*—The IAR agencies agree to retain all notices, agreements, authorizations, and accounting forms for the period defined in the IAR agreement for the purposes of SSA verifying transactions covered under the agreement.

(c) *Third Party Disclosure Requirements*—Each participating IAR agency agrees to send written notices from the IAR agency to the recipient regarding payment amounts and appeal rights.

(d) *Periodic Review of Agency Accounting Process*—The IAR agency makes the IAR accounting records of paid cases available for SSA review and verification. SSA conducts reviews either onsite or through the mail of the authorization forms, notices to the claimant, and accounting forms. Upon completion of the review, SSA provides a written report of findings to the IAR agency director. The respondents are State IAR officers.

Type of Request: Revision of an OMB-approved information collection.

REPORTING REQUIREMENTS

Type of request	Number of respondents	Frequency of response	Number of responses	Average burden per response (minutes)	Estimated annual burden (hours)
(a) State notification of receipt of authorization (Electronic Process).	11 States	Once per SSI claimant	97,330	1	1,622
(b) State submission of copy of authorization (Manual Process).	27 States	Once per SSI claimant	68,405	3	3,420
(c) State submission of amount of IAR paid to recipients (using eIAR).	38 States	Once per SSI claimant	101,352	8	13,514
(d) State request for determination—dispute resolution.	Average is about 2 States per year.	As needed	2	30	1
(e) State computation of reimbursement due from SSA using paper Form SSA–L8125–F6.	38 States	Once per SSI claimant	1,524	30	762
(f) State notification to SSA of deceased claimant.	20 States	As needed when SSI claimant dies while claim is pending.	40	15	10
(g) State reviewing/signing of IAR Agreement.	38 States	Once during life of the IAR agreement.	38	720	456

RECORDKEEPING REQUIREMENTS

Type of request	Number of respondents	Frequency of response	Number of responses	Average burden per response (minutes)	Estimated annual burden (hours)
(h) Maintenance of authorization forms.	38 States	One form per SSI claimant.	165,735 (includes both denied and approved SSI claims).	3	8,287
(i) Maintenance of accounting forms and notices.	38 States	One set per SSI claimant	101,352	3	5,068

THIRD PARTY DISCLOSURE REQUIREMENTS

Type of request	Number of respondents	Frequency of response	Number of responses	Average burden per response (minutes)	Estimated annual burden (hours)
(j) Written notice from State to recipient regarding amount of payment.	38 States	Once per SSI claimant	101,352	7	11,824

PERIODIC REVIEW OF AGENCY ACCOUNTING PROCESS

Type of request	Number of respondents	Frequency of response	Number of responses	Average burden per response (hours)	Estimated annual burden (hours)
(k) Retrieve and consolidate authorization and accounting forms.	12 States	One set of forms per SSI claimant for review by SSA once every 2 to 3 years.	12	3	36
(l) Participate in periodic review.	12 States	For review by SSA once every 2 to 3 years.	12	16	192
(m) Correct administrative and accounting discrepancies.	6 States	To correct errors discovered by SSA in periodic review.	6	4	24

TOTAL ADMINISTRATIVE BURDEN

	Number of respondents	Frequency of response	Number of responses	Average burden per response	Estimated annual burden (hours)
Total	38 States	varies	637,160	varies	45,216

II. SSA submitted the information collections below to OMB for clearance. Your comments regarding the information collections would be most useful if OMB and SSA receive them within 30 days from the date of this publication. To be sure we consider your comments, we must receive them no later than September 7, 2011. Individuals can obtain copies of the OMB clearance packages by calling the SSA Reports Clearance Officer at 410–965–8783 or by writing to the above e-mail address.

1. *Letter to Landlord Requesting Rental Information—20 CFR 416.1130 (b)—0960–0454.* SSA uses Form SSA–L5061 to identify rental subsidy arrangements involving applicants for and recipients of SSI payments. SSA uses the information to determine an income value for these subsidies, eligibility for payments, and the correct amount payable. The respondents are landlords of SSI claimants.

Type of Request: Revision of an OMB-approved information collection.

Number of Respondents: 51,000.

Frequency of Response: 1.

Average Burden per Response: 10 minutes.

Estimated Annual Burden: 8,500 hours.

2. *Background Disability Update Report—20 CFR 404.1589–.1595, 416.988–.996—0960–0511.* SSA periodically reviews current disability beneficiaries' cases to determine if they should continue to receive disability payments. SSA uses Form SSA–455 to determine if: (1) There is enough evidence to warrant referring the case for a full medical continuing disability review (CDR); (2) the beneficiary's impairment is unchanged or only slightly changed, precluding the need for a CDR; or (3) there are unresolved work-related issues. The respondents are recipients of Social Security disability benefits.

Type of Request: Revision of an OMB-approved information collection.

Number of Respondents: 1,100,000.

Frequency of Response: 1.

Average Burden per Response: 15 minutes.

Estimated Annual Burden: 275,000 hours.

Dated: August 3, 2011.

Faye Lipsky,

Reports Clearance Officer, Center for Reports Clearance, Social Security Administration.

[FR Doc. 2011–20012 Filed 8–5–11; 8:45 am]

BILLING CODE 4191–02–P

OFFICE OF THE UNITED STATES TRADE REPRESENTATIVE

Trade Policy Staff Committee; Public Comments on the Caribbean Basin Economic Recovery Act and the Caribbean Basin Trade Partnership Act: Report to Congress

AGENCY: Office of the United States Trade Representative.

ACTION: Notice and request for public comment.

SUMMARY: The Trade Policy Staff Committee (TPSC) is seeking the views of interested parties on the operation of the Caribbean Basin Economic Recovery Act (CBERA), as amended by the Caribbean Basin Trade Partnership Act (CBTPA) (19 U.S.C. 2701 *et seq.*). Section 212(f) of the CBERA, as amended, requires the President to submit a report to Congress regarding the operation of the CBERA and CBTPA (together commonly referred to as the Caribbean Basin Initiative, or CBI) on or before December 31, 2001, and every two years thereafter. The TPSC invites written comments concerning the operation of the CBI, including comments on the performance of each CBERA and CBTPA beneficiary country, as the case may be, under the criteria described in sections 212(b), 212(c), and

213(b)(5)(B) of the CBERA, as amended. This information will be used in the preparation of a report to the U.S. Congress on the operation of the program.

DATES: Public comments are due at USTR no later than 5 p.m., September 16, 2011.

FOR FURTHER INFORMATION CONTACT: Kent Shigetomi, Office of the Americas, Office of the United States Trade Representative, 600 17th Street, NW., Room 523, Washington, DC 20508. The telephone number is (202) 395–3412.

SUPPLEMENTARY INFORMATION: Interested parties are invited to submit comments on any aspect of the program's operation, including the performance of CBERA and CBTPA beneficiary countries, as the case may be, under the criteria described in sections 212(b), 212(c), and 213(b)(5)(B) of the CBERA, as amended, and provided below. Other issues to be examined in this report include: The CBI's effect on the volume and composition of trade and investment between the United States and the Caribbean Basin beneficiary countries; and its effect on advancing U.S. trade policy goals as set forth in the CBTPA. The following countries are both CBERA and CBTPA beneficiary countries: Barbados, Belize, Guyana, Haiti, Jamaica, Panama, Saint Lucia, and Trinidad and Tobago. Antigua and Barbuda, Aruba, The Bahamas, British Virgin Islands, Dominica, Grenada, Montserrat, Saint Kitts and Nevis, Saint Vincent and the Grenadines currently receive benefits only under CBERA. The Dominican Republic, El Salvador, Guatemala, Honduras, Nicaragua, and Costa Rica ceased to be designated as beneficiary countries when the Dominican Republic—Central America—United States Free Trade Agreement (CAFTA–DR) entered into force for each country. The CAFTA–DR entered into force for El Salvador on March 1, 2006; for Honduras on April 1, 2006; for Nicaragua on April 1, 2006; for Guatemala on July 1, 2006; for the Dominican Republic on March 1, 2007; and for Costa Rica on January 1, 2009.

Eligibility Criteria for CBTPA Beneficiary Countries (Section 213(b)(5)(B) of CBERA)

In determining whether to designate a country as a CBTPA beneficiary country, the President must take into account the criteria contained in sections 212(b) and (c) of CBERA, and other appropriate criteria, including the following:

(1) Whether the beneficiary country has demonstrated a commitment to undertake its obligations under the World Trade Organization (WTO) on or ahead of schedule and participate in negotiations toward the completion of the Free Trade Area of the Americas (FTAA) or another free trade agreement.

(2) The extent to which the country provides protection of intellectual property rights consistent with or greater than the protection afforded under the Agreement on Trade-Related Aspects of Intellectual Property Rights.

(3) The extent to which the country provides internationally recognized worker rights including—

(I) The right of association;

(II) The right to organize and bargain collectively;

(III) A prohibition on the use of any form of forced or compulsory labor;

(IV) A minimum age for the employment of children; and

(V) Acceptable conditions of work with respect to minimum wages, hours of work, and occupational safety and health.

(4) Whether the country has implemented its commitments to eliminate the worst forms of child labor, as defined in Section 507(6) of the Trade Act of 1974, as amended.

(5) The extent to which the country has met U.S. counter-narcotics certification criteria under the Foreign Assistance Act of 1961.

(6) The extent to which the country has taken steps to become a party to and implement the Inter-American Convention Against Corruption.

(7) The extent to which the country applies transparent, nondiscriminatory and competitive procedures in government procurement, and contributes to efforts in international fora to develop and implement rules on transparency in government procurement.

Additionally, before a country can receive benefits under the CBTPA, the President must also determine that the country has satisfied the requirements of section 213(b)(4)(A)(ii) of CBERA (19 U.S.C. 2703(b)(4)(A)(ii)) relating to the implementation of procedures and requirements similar in all material aspects to the relevant procedures and requirements contained in chapter 5 of the North American Free Trade Agreement.

Requirements for Submissions. All comments must be submitted in English and must identify (on the first page of the submission) the subject matter of the comment as the ''CBI Report to Congress.'' In order to be assured of consideration, comments should be submitted by September 16, 2011.

In order to ensure the timely receipt and consideration of comments, USTR strongly encourages commenters to make on-line submissions, using the *http://www.regulations.gov* Web site. Comments should be submitted under the following docket: USTR–2011–0004. To find the docket, enter the docket number in the ''Enter Keyword or ID'' window at the *http://www.regulations.gov* home page and click ''Search.'' The site will provide a search-results page listing all documents associated with this docket. Find a reference to this notice by selecting ''Notices''' under ''Document Type'' on the search-results page, and click on the link entitled ''Submit a Comment.'' (For further information on using the www.regulations.gov Web site, please consult the resources provided on the Web site by clicking on the ''Help'' tab.)

The *http://www.regulations.gov* Web site provides the option of making submissions by filling in a comments field, or by attaching a document. USTR prefers submissions to be provided in an attached document. If a document is attached, it is sufficient to type ''See attached'' in the ''Type comment & Upload File'' field. USTR prefers submissions in Microsoft Word (.doc) or Adobe Acrobat (.pdf). If the submission is in an application other than those two, please indicate the name of the application in the ''Comments'' field.

For any comments submitted electronically containing business confidential information, the file name of the business confidential version should begin with the characters ''BC''. The top of any page containing business confidential information must be clearly marked ''Business Confidential''. Any person filing comments that contain business confidential information must also file in a separate submission a public version of the comments. The file name of the public version should begin with the character ''P''. The ''BC'' and ''P'' should be followed by the name of the person or entity submitting the comments. If a comment contains no business confidential information, the file name should begin with the character ''P'', followed by the name of the person or entity submitting the comment.

Please do not attach separate cover letters to electronic submissions; rather, include any information that might appear in a cover letter in the comments themselves. Similarly, to the extent possible please include any exhibits, annexes, or other attachments in the same file as the submission itself, not as separate files.

Public Inspection of Submissions

Comments will be placed in the docket and open to public inspection pursuant to 15 CFR 2006.13, except

confidential business information exempt from public inspection in accordance with 15 CFR 2006.15. Comments may be viewed on the *http://www.regulations.gov* Web site by entering docket number USTR–2011–0004 in the search field on the home page.

USTR strongly urges submitters to file comments through regulations.gov, if at all possible. Any alternative arrangements must be made with Laura Newport in advance of transmitting a comment. Ms. Newport should be contacted at (202) 395–9666. General information concerning USTR is available at *http://www.ustr.gov.*

Donald W. Eiss,

Acting Chair, Trade Policy Staff Committee.

[FR Doc. 2011–20039 Filed 8–5–11; 8:45 am]

BILLING CODE 3190–W1–P

DEPARTMENT OF VETERANS AFFAIRS

Fund Availability Under VA's Homeless Providers Grant and Per Diem Program

AGENCY: Department of Veterans Affairs.

ACTION: Notice.

SUMMARY: The Department of Veterans Affairs (VA) is announcing the availability of funds for currently operational fiscal year (FY) 2009 VA Grant and Per Diem Special Need Grant Recipients in conjunction with their collaborative VA Special Need partners and currently operational VA Grant and Per Diem Special Need Grant Recipients not involved with collaborative VA partners. All current VA Grant and Per Diem Special Need Grant recipients will have the opportunity to reapply for assistance under the Special Need Grant Component of VA's Homeless Providers Grant and Per Diem Program. The focus of this Notice of Funding Availability (NOFA) is to encourage applicants to continue to deliver services to the homeless Special Need veteran population as outlined in their FY 2009 Special Need grant application. This Notice contains information concerning the program, application process, and amount of funding available.

DATES: An original signed and dated request for re-application letter (on agency letterhead) for assistance under the VA's Homeless Providers Grant and Per Diem Program must be received in the Grant and Per Diem Program Office, by 4 p.m. Eastern Time on Thursday, August 25, 2011 (see re-application requirements below). Requests for re-application may not be sent by facsimile (Fax). In the interest of fairness to all competing applicants, this deadline is firm as to date and hour, and VA will treat as ineligible for consideration any request for re-application that is received after the deadline. Applicants should take this practice into account and make early submission of their material to avoid any risk of loss of eligibility brought about by unanticipated delays or other delivery-related problems.

For a Copy of the Application Package: An application package is not needed for this NOFA. Applicants submitting a letter on their agency's letterhead requesting re-application agree that VA shall use the applicant's previously awarded FY 2009 Special Need grant application for scoring purposes (see re-application requirements in this NOFA).

Submission of Application: An original and complete letter requesting re-application with project number (see re-application requirements in this NOFA) must be submitted to the following address: VA's Homeless Providers Grant and Per Diem Program Office, 10770 North 46th Street, Suite C–200, Tampa, Florida 33617. Letters of re-application must be received in the Grant and Per Diem Program office by the re-application deadline. Any additional materials arriving separately will not be included in the re-application package for consideration.

FOR FURTHER INFORMATION CONTACT: Ms. Chelsea Watson, Deputy Director, VA's Homeless Providers Grant and Per Diem Program, Department of Veterans Affairs, 10770 North 46th Street, Suite C–200, Tampa, Florida 33617; (toll-free) (877) 332–0334.

SUPPLEMENTARY INFORMATION: This Notice announces the availability of funds for assistance under VA's Homeless Providers Grant and Per Diem Program for FY 2009 operational Grant and Per Diem Special Need grant recipients and their collaborative VA partners to obtain grant assistance with additional operational costs that would not otherwise be incurred but for the fact that the recipient is providing supportive housing beds and services for the Special Needs of the centers for the following homeless veteran populations:

Women, including women who have care of minor dependents;

Frail elderly;

Terminally ill; or

Chronically mentally ill.

Definitions of women and women who have care of minor dependents are self-defining. The population definitions of frail elderly, terminally ill, and chronically mentally ill are contained in 38 CFR 61.1 Definitions. Eligible applicants should review these definitions to ensure their proposed populations meet the specific requirements.

VA is pleased to issue this NOFA for the VA's Homeless Providers Grant and Per Diem Program as a part of the effort to end homelessness among our nation's veterans. Funding applied for under this Notice may be used for: The provision of service, operation, or personnel to facilitate the following with regard to the targeted group:

Women, Including Women Who Have Care of Minor Dependents

(1) Ensure transportation for women and their children, especially for health care and educational needs;

(2) Provide directly or offer referrals for adequate and safe child care;

(3) Ensure children's health care needs are met, especially age appropriate wellness visits and immunizations; and

(4) Address safety and security issues including segregation procedures from other program participants if deemed appropriate.

Frail Elderly

(1) Ensure the safety of the residents in the facility to include preventing harm and exploitation;

(2) Ensure opportunities to keep residents mentally and physically agile to the fullest extent through the incorporation of structured activities, physical activity, and plans for social engagement within the program and in the community;

(3) Provide opportunities for participants to address life transitional issues and separation and/or loss issues;

(4) Provide access to assistance devices such as walkers, grippers, or other devices necessary for optimal functioning;

(5) Ensure adequate supervision, including supervision of medication and monitoring of medication compliance; and

(6) Provide opportunities for participants either directly or through referral for other services particularly relevant for the frail elderly, including services or programs addressing emotional, social, spiritual, and generative needs.

Terminally Ill

(1) Help participants address life-transition and life-end issues;

(2) Ensure that participants are afforded timely access to hospice services;

(3) Provide opportunities for participants to engage in ''tasks of

dying,'' or activities of ''getting things in order'' or other therapeutic actions that help resolve end of life issues and enable transition and closure;

(4) Ensure adequate supervision including supervision of medication and monitoring of medication compliance; and

(5) Provide opportunities for participants either directly or through referral for other services particularly relevant for terminally ill such as legal counsel and pain management.

Chronically Mentally Ill

(1) Help participants join in and engage with the community;

(2) Facilitate reintegration with the community and provide services that may optimize reintegration such as life-skills education, recreational activities, and follow up case management;

(3) Ensure that participants have opportunities and services for re-establishing relationships with family;

(4) Ensure adequate supervision, including supervision of medication and monitoring of medication compliance; and

(5) Provide opportunities for participants, either directly or through referral, to obtain other services particularly relevant for a chronically mentally ill population, such as vocational development, benefits management, fiduciary or money management services, medication compliance, and medication education.

Through this NOFA, VA seeks to renew the FY 2009 previous grant and per diem Special Need providers and their VA collaborative partners in order to continue serving the Special Need veteran populations.

No part of a Special Need grant may be used for any purpose that would significantly change the scope of the specific grant and per diem project for which a capital grant and per diem was awarded. As a part of the review process, VA will review the original project and subsequent approved program changes of the previous FY 2009 Special Need applications to ensure significant scope changes have not occurred thereby displacing other homeless veteran populations. VA will not allow any changes under this renewal NOFA.

Special Need funding may not be used for capital improvements or to purchase vans or real property. However, the leasing of vans or real property may be acceptable. Questions regarding acceptability should be directed to VA's Grant and Per Diem Program Office at (877) 332–0334. Applicants may not receive Special Need Assistance to replace funds provided by any Federal, state or local government agency or program to assist homeless persons.

Authority: Funding applied for under this Notice is authorized by the ''Homeless Veterans Comprehensive Assistance Act of 2001,'' Public Law 107–95, § 5, codified as amended at title 38 U.S.C. 2011, 2012, 2013, 2061, 2064. The program is implemented by the Final Rule codified at 38 CFR part 61.0. The regulations can be found in their entirety in 38 CFR, Sec. 61.0 through 61.82. Funds made available under this Notice are subject to the requirements of those regulations.

Allocation: Approximately $11 million is available for current Grant and Per Diem Special Need grant projects. Funding will be for a period beginning on October 1, 2011 and ending on September 30, 2013. Applicants are limited to a maximum award equal to their FY 2009 Special Need award plus a 5-percent increase. For example: $100,000 award in FY 2009 would be $100,000 plus 5 percent or $105,000. Applicants should ensure their funding requests are based on this 24-month period and should be approximately in line with prior expenditures. Based on Grant and Per Diem funding availability, approximately, $8 million is expected to be made available over the specified time (internally) for the current VA collaborative partners. The maximum award to each VA collaborative partner will follow the same methodology; limited to a maximum award equal to their FY 2009 Special Need award plus a 5-percent increase.

The goal of this Notice is to ensure a continuation of Special Need services to homeless veterans and their VA collaborative partners.

It is important to be aware that VA places great emphasis on responsibility and accountability. VA has procedures in place to monitor services provided to homeless veterans and outcomes associated with the services provided in grant and per diem-funded programs. Applicants should be aware of the following:

Potential applicants should take into consideration, ''Grant recipients that concurrently receive Special Needs and per diem payments shall not be paid more than 100 percent of the cost for the bed per day, product, operation, personnel, or service provided'' (38 CFR 61.61(h)). Further, VA per diem payment is limited to the applicant's cost of care per eligible veteran minus other sources of payments to the applicant for furnishing services to homeless veterans up to the per day rate VA pays for State Home Domiciliary care. Awardees will be required to support their request for Special Needs and per diem payments with adequate fiscal documentation as to program income and expenses.

All awardees that are selected in response to this NOFA must meet the requirements of the current edition of the Life Safety Code of the National Fire Protection Association as it relates to their specific facility. Applicants should note that all facilities are to be protected throughout by an approved automatic sprinkler system unless a facility is specifically exempted under the Life Safety Code. Applicants should make consideration of this when submitting their grant applications as no additional funds will be made available for capital improvements under this NOFA.

Each grant awardee will have the VA liaison that was appointed for its corresponding grant and per diem program monitor services to ensure the Special Need grant is being met and will include at least an annual review of each program's progress toward meeting internal goals and objectives in helping the Special Need homeless veterans as identified in each applicant's original Special Need application. Monitoring for all participants will include a review of the agency's income and expenses as they relate to this project to ensure per diem and Special Need payments are accurate.

VA will monitor the homeless Special Need participants and services provided by GPD recipients according to appropriate VA procedure. These monitoring procedures will be used to determine successful accomplishment of outcomes for each collaborative partnership.

Funding Priorities: None.

Agreement and Funding Actions: Conditionally selected applicants will complete a funding agreement with VA in accordance with 38 CFR 61.61 and provide any additional information as required by VA. Upon signature by the Secretary or designated representative, final selection will be completed.

Funding for operational grant and per diem applicants that are finally selected will not exceed the period specified in this NOFA. A condition to obtain the Special Need Grant is for the applicant to maintain the original (grant or per diem) program for which the Special Need grant is sought.

Re-Application Requirements and Additional Information: A separate request for renewal letter is needed for each project number for which you are requesting Special Need Funding. In addition, current Special Need recipients should also list their Special Need Project number. A project number is the last two digits of the year funded, the sequence the application was

received, and the state abbreviation for the project location, (*i.e.,* 09–325–MA would have been funded in the year 2009, the 325th application received, and located in Massachusetts). If you do not know your project number. please call VA's Grant and Per Diem Program Office at (877) 332–0334.

The grant application requirements were specified and met in the original application package and need not be provided as the applicant agrees that, as a condition of funding under this NOFA, the grant recipient's FY 2009 Special Need grant application will be used.

The following additional information is required by this NOFA. The renewal request must include:

a. A letter from the renewal applicant on agency signed letterhead, stating the applicant agrees to the following: (1) That, as a condition of funding under this NOFA, the grant recipient's FY 2009 Special Need grant application will be used, (2) that the applicant will provide the services as outlined in the FY 2009 Special Need grant application, and (3) the applicant's FY 2009 required forms and certifications still apply for the period of this award.

b. If the FY 2009 Special Need grant was a collaborative project the renewal request must include an updated letter of commitment or an updated Memorandum of Agreement (MOA) from the VA collaborative partner, stating that the VA will continue to meet its objectives or provide its duties as outlined in the original MOA in FY 2009.

c. A complete new budget for the renewal applicant and collaborative partner with costs based on past costs incurred and the funding limitation of 100 percent of their 2009 award plus 5 percent per each Special Need FY 2009 grant as stated in this NOFA. Renewal applicants should take into consideration the 24 month period of award when calculating and submitting their budget for this NOFA.

d. A complete new budget for the VA collaborative partner with costs based on past costs incurred and the funding limitation of 100 percent of their 2009 award plus 5 percent per each Special Need FY 2009 grant as stated in this NOFA. VA partners should take into consideration the 24 month period of award when calculating and submitting their budget for this NOFA (if there is no collaborative partner then only an applicant budget is needed).

Applicants having questions with regard to the funding from previous Special Need awards should contact the Grant and Per Diem Program Office prior to application for this NOFA.

Selections will be made based on criteria described in the FY 2009 application and additional information as specified in this NOFA.

Applicants who are selected will be notified of any additional information needed to confirm or clarify information provided in the application. Applicants will then be notified of the deadline to submit such information. If an applicant is unable to meet any conditions for grant award within the specified time frame, VA reserves the right to not award funds and to use the funds available for other grant and per diem applicants.

Dated: August 1, 2011.

John R. Gingrich,

Chief of Staff, Department of Veterans Affairs.

[FR Doc. 2011–19948 Filed 8–5–11; 8:45 am]

BILLING CODE P

FEDERAL REGISTER

Vol. 76 Monday,

No. 152 August 8, 2011

Book 2 of 2 Books

Pages 48207–48712

Part II

Environmental Protection Agency

40 CFR Parts 51, 52, 72 et al.
Federal Implementation Plans: Interstate Transport of Fine Particulate Matter and Ozone and Correction of SIP Approvals; Final Rule

ENVIRONMENTAL PROTECTION AGENCY

40 CFR Parts 51, 52, 72, 78, and 97

[EPA–HQ–OAR–2009–0491; FRL–9436–8]

RIN 2060–AP50

Federal Implementation Plans: Interstate Transport of Fine Particulate Matter and Ozone and Correction of SIP Approvals

AGENCY: Environmental Protection Agency (EPA).

ACTION: Final rule.

SUMMARY: In this action, EPA is limiting the interstate transport of emissions of nitrogen oxides (NO_X) and sulfur dioxide (SO_2) that contribute to harmful levels of fine particle matter ($PM_{2.5}$) and ozone in downwind states. EPA is identifying emissions within 27 states in the eastern United States that significantly affect the ability of downwind states to attain and maintain compliance with the 1997 and 2006 fine particulate matter national ambient air quality standards (NAAQS) and the 1997 ozone NAAQS. Also, EPA is limiting these emissions through Federal Implementation Plans (FIPs) that regulate electric generating units (EGUs) in the 27 states. This action will substantially reduce adverse air quality impacts in downwind states from emissions transported across state lines. In conjunction with other federal and state actions, it will help assure that all but a handful of areas in the eastern part of the country achieve compliance with the current ozone and $PM_{2.5}$ NAAQS by the deadlines established in the Clean Air Act (CAA or Act). The FIPs may not fully eliminate the prohibited emissions from certain states with respect to the 1997 ozone NAAQS for two remaining downwind areas and EPA is committed to identifying any additional required upwind emission reductions and taking any necessary action in a future rulemaking. In this action, EPA is also modifying its prior approvals of certain State Implementation Plan (SIP) submissions to rescind any statements that the submissions in question satisfy the interstate transport requirements of the CAA or that EPA's approval of the SIPs affects our authority to issue interstate transport FIPs with respect to the 1997 fine particulate and 1997 ozone standards for 22 states. EPA is also issuing a supplemental proposal to request comment on its conclusion that six additional states significantly affect downwind states' ability to attain and maintain compliance with the 1997 ozone NAAQS.

DATES: This final rule is effective on October 7, 2011.

ADDRESSES: EPA has established a docket for this action under Docket ID No. EPA–HQ–OAR–2009–0491. All documents in the docket are listed on the *http://www.regulations.gov* Web site. Although listed in the index, some information is not publicly available, *e.g.,* CBI or other information whose disclosure is restricted by statute. Certain other material, such as copyrighted material, is not placed on the Internet and will be publicly available only in hard copy form. Publicly available docket materials are available either electronically through *http://www.regulations.gov* or in hard copy at the EPA Docket Center, EPA West, Room B102, 1301 Constitution Avenue, NW., Washington, DC. The Public Reading Room is open from 8:30 a.m. to 4:30 p.m., Monday through Friday, excluding legal holidays. The telephone number for the Public Reading Room is (202) 566–1744, and the telephone number for the Air Docket is (202) 566–1742.

FOR FURTHER INFORMATION CONTACT: For general questions concerning this action, please contact Ms. Meg Victor, Clean Air Markets Division, Office of Atmospheric Programs, Mail Code 6204J, Environmental Protection Agency, 1200 Pennsylvania Avenue, NW., Washington, DC 20460; telephone number: (202) 343–9193; fax number: (202) 343–2359; e-mail address: *victor.meg@epa.gov.* For legal questions, please contact Ms. Sonja Rodman, U.S. EPA, Office of General Counsel, Mail Code 2344A, 1200 Pennsylvania Avenue, NW., Washington, DC 20460, telephone (202) 564–4079; e-mail address: *rodman.sonja@epa.gov.*

SUPPLEMENTARY INFORMATION:

I. Preamble Glossary of Terms and Abbreviations

The following are abbreviations of terms used in the preamble.

AQAT Air Quality Assessment Tool
ARP Acid Rain Program
BART Best Available Retrofit Technology
BACT Best Available Control Technology
CAA or Act Clean Air Act
CAIR Clean Air Interstate Rule
CAMx Comprehensive Air Quality Model with Extensions
CBI Confidential Business Information
CCR Coal Combustion Residuals
CEM Continuous Emissions Monitoring
CENRAP Central Regional Air Planning Association
CFR Code of Federal Regulations
DEQ Department of Environmental Quality
DSI Dry Sorbent Injection
EGU Electric Generating Unit
FERC Federal Energy Regulatory Commission
FGD Flue Gas Desulfurization
FIP Federal Implementation Plan
FR **Federal Register**
EPA U.S. Environmental Protection Agency
GHG Greenhouse Gas
GW Gigawatts
Hg Mercury
ICR Information Collection Request
IPM Integrated Planning Model
km Kilometers
lb/mmBtu Pounds Per Million British Thermal Unit
LNB Low-NO_X Burners
MACT Maximum Achievable Control Technology
MATS Modeled Attainment Test Software
$\mu g/m^3$ Micrograms Per Cubic Meter
MSAT Mobile Source Air Toxics
MOVES Motor Vehicle Emission Simulator
NAAQS National Ambient Air Quality Standards
NBP NO_X Budget Trading Program
NEI National Emission Inventory
NESHAP National Emissions Standards for Hazardous Air Pollutants
NO_X Nitrogen Oxides
NODA Notices of Data Availability
NSPS New Source Performance Standard
NSR New Source Review
OFA Overfire Air
OSAT Ozone Source Apportionment Technique
OTAG Ozone Transport Assessment Group
ppb Parts Per Billion
$PM_{2.5}$ Fine Particulate Matter, Less Than 2.5 Micrometers
PM_{10} Fine and Coarse Particulate Matter, Less Than 10 Micrometers
PM Particulate Matter
ppm Parts Per Million
PUC Public Utility Commission
RIA Regulatory Impact Analysis
SCR Selective Catalytic Reduction
SIP State Implementation Plan
SMOKE Sparse Matrix Operator Kernel Emissions
SNCR Selective Non-catalytic Reduction
SO_2 Sulfur Dioxide
SO_X Sulfur Oxides, Including Sulfur Dioxide (SO_2) and Sulfur Trioxide (SO_3)
TAF Terminal Area Forecast
TCEQ Texas Commission on Environmental Quality
TIP Tribal Implementation Plan
TLN3 Tangential Low NO_X
TPY Tons Per Year
TSD Technical Support Document
WRAP Western Regional Air Partnership

II. General Information

A. Does this action apply to me?

This rule affects EGUs, and regulates the following groups:

Industry group	NAICS [a]
Utilities (electric, natural gas, other systems.) ...	2211, 2212, 2213

[a] North American Industry Classification System.

This table is not intended to be exhaustive, but rather provides a guide for readers regarding entities likely to be regulated by this action. This table lists

the types of entities that EPA is aware of that could potentially be regulated. Other types of entities not listed in the table could also be regulated. To determine whether your facility would be regulated by the proposed rule, you should carefully examine the applicability criteria in proposed §§ 97.404, 97.504, and 97,604.

B. How is the preamble organized?

I. Preamble Glossary of Terms and Abbreviations
II. General Information
A. Does this action apply to me?
B. How is the preamble organized?
III. Executive Summary
IV. Legal Authority, Environmental Basis, and Correction of CAIR SIP Approvals
A. EPA's Authority for Transport Rule
B. Rulemaking History
C. Air Quality Problems and NAAQS Addressed
1. Air Quality Problems and NAAQS Addressed
2. FIP Authority for Each State and NAAQS Covered
3. Additional Information Regarding CAA Section 110(a)(2)(D)(i)(I) SIPs for States in the Transport Rule Modeling Domain
D. Correction of CAIR SIP Approvals
V. Analysis of Downwind Air Quality and Upwind State Emissions
A. Pollutants Regulated
1. Background
2. Which pollutants did EPA propose to control for purposes of $PM_{2.5}$ and Ozone Transport?
3. Comments and Responses
B. Baseline for Pollution Transport Analysis
C. Air Quality Modeling to Identify Downwind Nonattainment and Maintenance Receptors
1. Emission Inventories
2. Air Quality Basis for Identifying Receptors
3. How did EPA project future nonattainment and maintenance for annual $PM_{2.5}$, 24-hour $PM_{2.5}$, and 8-hour ozone?
D. Pollution Transport From Upwind States
1. Choice of Air Quality Thresholds
2. Approach for Identifying Contributing Upwind States
VI. Quantification of State Emission Reductions Required
A. Cost and Air Quality Structure for Defining Reductions
1. Summary
2. Background
B. Cost of Available Emission Reductions (Step 1)
1. Development of Annual NO_X and Ozone-Season NO_X Cost Curves
2. Development of SO_2 Cost Curves
3. Amount of Reductions That Could Be Achieved by 2012 and 2014
C. Estimates of Air Quality Impacts (Step 2)
1. Development of the Air Quality Assessment Tool and Air Quality Modeling Strategy
2. Utilization of AQAT to Evaluate Control Scenarios
3. Air Quality Assessment Results
D. Multi-Factor Analysis and Determination of State Emission Budgets
1. Multi-Factor Analysis (Step 3)
2. State Emission Budgets (Step 4)
E. Approach to Power Sector Emission Variability
1. Introduction to Power Sector Variability
2. Transport Rule Variability Limits
F. Variability Limits and State Emission Budgets: State Assurance Levels
G. How the State Emission Reduction Requirements Are Consistent With Judicial Opinions Interpreting the Clean Air Act
VII. FIP Program Structure to Achieve Reductions
A. Overview of Air Quality-Assured Trading Programs
B. Applicability
C. Compliance Deadlines
1. Alignment With NAAQS Attainment Deadlines
2. Compliance and Deployment of Pollution Control Technologies
D. Allocation of Emission Allowances
1. Allocations to Existing Units
2. Allocations to New Units
E. Assurance Provisions
F. Penalties
G. Allowance Management System
H. Emissions Monitoring and Reporting
I. Permitting
1. Title V Permitting
2. New Source Review
J. How the Program Structure Is Consistent With Judicial Opinions Interpreting the Clean Air Act
VIII. Economic Impacts of the Transport Rule
A. Emission Reductions
B. The Impacts on $PM_{2.5}$ and Ozone of the Final SO_2 and NO_X Strategy
C. Benefits
1. Human Health Benefit Analysis
2. Quantified and Monetized Visibility Benefits
3. Benefits of Reducing GHG Emissions
4. Total Monetized Benefits
5. How do the benefits in 2012 compare to 2014?
6. How do the benefits compare to the costs of this final rule?
7. What are the unquantified and non-monetized benefits of the Transport Rule emission reductions?
D. Costs and Employment Impacts
1. Transport Rule Costs and Employment Impacts
2. End-Use Energy Efficiency
IX. Related Programs and the Transport Rule
A. Transition From the Clean Air Interstate Rule
1. Key Differences Between the Transport Rule and CAIR
2. Transition From the Clean Air Interstate Rule to the Transport Rule
B. Interactions With NO_X SIP Call
C. Interactions With Title IV Acid Rain Program
D. Other State Implementation Plan Requirements
X. Transport Rule State Implementation Plans
XI. Structure and Key Elements of Transport Rule Air Quality-Assured Trading Program Rules
XII. Statutory and Executive Order Reviews
A. Executive Order 12866: Regulatory Planning and Review and Executive Order 13563: Improving Regulation and Regulatory Review
B. Paperwork Reduction Act
C. Regulatory Flexibility Act
D. Unfunded Mandates Reform Act
E. Executive Order 13132: Federalism
F. Executive Order 13175: Consultation and Coordination With Indian Tribal Governments
G. Executive Order 13045: Protection of Children From Environmental Health and Safety Risks
H. Executive Order 13211: Actions That Significantly Affect Energy Supply, Distribution, or Use
I. National Technology Transfer and Advancement Act
J. Executive Order 12898: Federal Actions To Address Environmental Justice in Minority Populations and Low-Income Populations
1. Consideration of Environmental Justice in the Transport Rule Development Process and Response to Comments
2. Potential Environmental and Public Health Impacts Among Populations Susceptible or Vulnerable to Air Pollution
3. Meaningful Public Participation
4. Summary
K. Congressional Review Act
L. Judicial Review

III. Executive Summary

The CAA section 110(a)(2)(D)(i)(I) requires states to prohibit emissions that contribute significantly to nonattainment in, or interfere with maintenance by, any other state with respect to any primary or secondary NAAQS. In this final rule, EPA finds that emissions of SO_2 and NO_X in 27 eastern, midwestern, and southern states contribute significantly to nonattainment or interfere with maintenance in one or more downwind states with respect to one or more of three air quality standards—the annual $PM_{2.5}$ NAAQS promulgated in 1997, the 24-hour $PM_{2.5}$ NAAQS promulgated in 2006, and the ozone NAAQS promulgated in 1997 (EPA uses the term ''states'' to include the District of Columbia in this preamble).

These emissions are transported downwind either as SO_2 and NO_X or, after transformation in the atmosphere, as fine particles or ozone. This final rule identifies emission reduction responsibilities of upwind states, and also promulgates enforceable FIPs to achieve the required emission reductions in each state through cost-effective and flexible requirements for power plants. Each state has the option of replacing these federal rules with state rules to achieve the required amount of emission reductions from sources selected by the state.

Section 110(a)(2)(D)(i)(I) of the CAA requires the elimination of upwind state emissions that significantly contribute to nonattainment or interfere with maintenance of a NAAQS in another state. Elimination of these upwind state emissions may not necessarily, in itself, fully resolve nonattainment or maintenance problems at downwind state receptors. Downwind states also have control responsibilities because, among other things, the Act requires each state to adopt enforceable plans to attain and maintain air quality standards. Indeed, states have put in place measures to reduce local emissions that contribute to nonattainment within their borders. Section 110(a)(2)(D)(i)(I) only requires the elimination of emissions that significantly contribute to nonattainment or interfere with maintenance of the NAAQS in other states; it does not shift to upwind states the responsibility for ensuring that all areas in other states attain the NAAQS.

The reductions obtained through the Transport Rule will help all but a few downwind areas come into attainment with and maintain the 1997 annual $PM_{2.5}$ NAAQS, the 2006 24-hour $PM_{2.5}$ NAAQS, and the 1997 ozone NAAQS. With respect to the annual $PM_{2.5}$ NAAQS, this rule finds that 18 states have SO_2 and annual NO_X emission reduction responsibilities, and this rule quantifies each state's full emission reduction responsibility under section 110(a)(2)(D)(i)(I). *See* Table III–1 for the list of these states. With these reductions, EPA projects that no areas will have nonattainment or maintenance concerns with respect to the annual $PM_{2.5}$ NAAQS.

With respect to the 24-hour $PM_{2.5}$ NAAQS, this rule finds that 21 states have SO_2 and annual NO_X emission reduction responsibilities, and this rule quantifies each state's full emission reduction responsibility under 110(a)(2)(D)(i)(I). *See* Table III–1 for the list of these states. In all, this rule requires emission reductions related to interstate transport of fine particles in 23 states. With these reductions, as discussed in section VI.D of this preamble, only one area (Liberty-Clairton) is projected to remain in nonattainment, and three other areas (Chicago,[1] Detroit, and Lancaster) are projected to have remaining maintenance concerns for the 24-hour $PM_{2.5}$ NAAQS.

With respect to the 1997 ozone NAAQS, this rule finds that 20 states have ozone-season NO_X emission reduction responsibilities. For 10 of these states this rule quantifies the state's full emission reduction responsibility under section 110(a)(2)(D)(i)(I).[2] For 10 additional states, EPA quantifies in this rule the ozone-season NO_X emission reductions that are necessary but may not be sufficient to eliminate all significant contribution to nonattainment and interference with maintenance in other states.[3] *See* Table III–1 for the complete list of 20 states required to reduce ozone-season NO_X emissions in this rule. With the Transport Rule reductions, only one area (Houston) is projected to remain in nonattainment, and one area (Baton Rouge) to have a remaining maintenance concern with respect to the 1997 ozone NAAQS. The 10 states upwind of either of these two areas are the states for which additional reductions may be necessary to fully eliminate each state's significant contribution to nonattainment and interference with maintenance, as discussed in section VI of this preamble.[4]

As discussed further below, EPA's analysis also demonstrates that six additional states should be required to reduce ozone-season NO_X emissions. EPA is issuing a supplemental proposal to request comment on requiring ozone-season NO_X reductions in these six states. For five of these six states, EPA's analysis identifies the state's full emission reduction responsibility under section 110(a)(2)(D)(i)(I), and for the remaining one state EPA's analysis identifies reductions that are necessary but may not be sufficient to satisfy the requirements of 110(a)(2)(D)(i)(I).[5]

On January 19, 2010, EPA proposed revisions to the 8-hour ozone NAAQS that the Agency had issued March 12, 2008 (75 FR 2938); the Agency intends to finalize its reconsideration in the summer of 2011. EPA intends to propose a rule to address transport with respect to the reconsidered 2008 ozone NAAQS as expeditiously as possible after reconsideration is completed. EPA intends to include in that proposed rule requirements to address any remaining significant contribution to nonattainment and interference with maintenance with respect to the 1997 ozone NAAQS for the states identified in this final rule, or the associated supplemental notice of proposed rulemaking, for which EPA was unable to fully quantify the emissions that must be prohibited to satisfy the requirements of 110(a)(2)(D)(i)(I) with respect to the 1997 ozone NAAQS.

The Act requires EPA to conduct periodic reviews of each of the NAAQS. When NAAQS are set or revised, the CAA requires revision of SIPs to ensure the standards are met expeditiously and within relevant timetables in the Act. If more protective NAAQS are promulgated, in the case of pollutants for which interstate transport is important, additional emission reductions to address transported pollution may be required from the power sector, from other sectors, and from sources in additional states. EPA will act promptly to promulgate any future rules addressing transport with respect to revised NAAQS.

The Transport Rule requires substantial near-term emission reductions in every covered state to address each state's significant contribution to nonattainment and interference with maintenance downwind. This rule achieves these reductions through FIPs that regulate the power sector using air quality-assured trading programs whose assurance provisions ensure that necessary reductions will occur within every covered state. This remedy structure is substantially similar to the preferred trading remedy structure presented in the proposal. The Transport Rule's air quality-assured trading approach will assure

[1] This area is not currently designated as nonattainment for the 24-hour $PM_{2.5}$ standard. EPA is portraying the receptors and counties in this area as a single 24-hour maintenance area based on the annual $PM_{2.5}$ nonattainment designation of Chicago-Gary-Lake County, IL-IN.

[2] The 10 states for which this rule quantifies the state's full responsibility under section 110(a)(2)(D)(i)(I) with respect to the 1997 ozone NAAQS are Florida, Maryland, New Jersey, New York, North Carolina, Ohio, Pennsylvania, South Carolina, Virginia, and West Virginia.

[3] The 10 states for which this rule quantifies reductions that are necessary but may not be sufficient to satisfy the requirements of 110(a)(2)(D)(i)(I) with respect to the 1997 ozone NAAQS are Alabama, Arkansas, Georgia, Illinois, Indiana, Kentucky, Louisiana, Mississippi, Tennessee, and Texas.

[4] This preamble uses the term ''significant contribution'' only in the context of the CAA section 110(a)(2)(D)(i)(I) requirement that states prohibit emissions that ''contribute significantly to nonattainment'' in any other state with respect to any primary or secondary NAAQS. Thus, a significant contribution, as used in this preamble, is one that is significant for purposes of CAA section 110(a)(2)(D)(i)(I) as coming from a particular state.

[5] The five states addressed in the supplemental proposal for which EPA's analysis identifies the state's full reduction responsibility under section 110(a)(2)(D)(i)(I) with respect to the 1997 ozone NAAQS are Iowa, Kansas, Michigan, Oklahoma, and Wisconsin. The one state addressed in the supplemental proposal for which EPA's analysis identifies reductions that are necessary but may not be sufficient to satisfy section 110(a)(2)(D)(i)(I) with respect to the 1997 ozone NAAQS is Missouri.

environmental results in each state while providing market-based flexibility to covered sources through interstate trading. The final rule includes four air quality-assured trading programs: An annual NO_X trading program, an ozone-season NO_X trading program, and two separate SO_2 trading programs (''SO_2 Group 1'' and ''SO_2 Group 2''), as discussed further in sections VI and VII, below.

The first phase of Transport Rule compliance commences January 1, 2012, for SO_2 and annual NO_X reductions and May 1, 2012, for ozone-season NO_X reductions. The second phase of Transport Rule reductions, which commences January 1, 2014, increases the stringency of SO_2 reductions in a number of states as discussed further below.

EPA projects that with the Transport Rule, covered EGU will substantially reduce SO_2, annual NO_X and ozone-season NO_X emissions, as shown in Tables III–2 and III–3, below. This rule generally covers electric generating units that are fossil fuel-fired boilers and turbines producing electricity for sale, as detailed in section VII.B.

EPA is promulgating the Transport Rule in response to the remand of the Clean Air Interstate Rule (CAIR) by the U.S. Court of Appeals for the District of Columbia Circuit (''Court'') in 2008. CAIR, promulgated May 12, 2005 (70 FR 25162), required 29 states to adopt and submit revisions to their State Implementation Plans (SIPs) to eliminate SO_2 and NO_X emissions that contribute significantly to downwind nonattainment of the $PM_{2.5}$ and ozone NAAQS promulgated in July 1997. CAIR covered a similar but not identical set of states as the Transport Rule. CAIR FIPs were promulgated April 26, 2006 (71 FR 25328) to regulate electric generating units in the covered states and achieve the emission reduction requirements established by CAIR until states could submit and obtain approval of SIPs to achieve the reductions.

In July 2008, the Court found CAIR and the CAIR FIPs unlawful. *North Carolina* v. *EPA,* 531 F.3d 896 (D.C. Cir. 2008), modified on rehearing, *North Carolina* v. *EPA,* 550 F.3d 1176, 1178 (D.C. Cir. 2008). The Court's original decision vacated CAIR. *North Carolina,* 531 F.3d at 929–30. However, the Court subsequently remanded CAIR to EPA without vacatur because it found that ''allowing CAIR to remain in effect until it is replaced by a rule consistent with our opinion would at least temporarily preserve the environmental values covered by CAIR.'' *North Carolina,* 550 F.3d at 1178. The CAIR requirements have remained in place while EPA has developed the Transport Rule to replace them.

EPA's approach in the Transport Rule to measure and address each state's significant contribution to downwind nonattainment and interference with maintenance is guided by and consistent with the Court's opinion in *North Carolina* and addresses the flaws in CAIR identified by the Court therein. This final rule also responds to extensive public comments and stakeholder input received during the public comment periods in response to the proposal and subsequent Notices of Data Availability (NODAs).

In this action, EPA both identifies and addresses emissions within states that significantly contribute to nonattainment or interfere with maintenance in other downwind states. In developing this rule, EPA used a state-specific methodology to identify emission reductions that must be made in covered states to address the CAA section 110(a)(2)(D)(i)(I) prohibition on emissions that significantly contribute to nonattainment or interfere with maintenance in a downwind state. EPA believes this methodology addresses the Court's concern that the approach used in CAIR was insufficiently state-specific. EPA used detailed air quality analysis to determine whether a state's contribution to downwind air quality problems is at or above specific thresholds. A state is covered by the Transport Rule if its contribution meets or exceeds one of those air quality thresholds and the Agency identifies, using a multi-factor analysis that takes into account both air quality and cost considerations, emissions within the state that constitute the state's significant contribution to nonattainment and interference with maintenance with respect to the 1997 ozone or the 1997 annual or 2006 24-hour $PM_{2.5}$ NAAQS. Section 110(a)(2)(D)(i)(I) requires states to eliminate the emissions that constitute this ''significant contribution'' and ''interference with maintenance.'' [6]

In this final rule, EPA determined the emission reductions required from all upwind states to eliminate significant contribution to nonattainment and interference with maintenance with respect to the 1997 ozone, 1997 annual $PM_{2.5}$, and 2006 24-hour $PM_{2.5}$ NAAQS, using, in part, an assessment of modeled air quality in 2012 and 2014. EPA first identified the following two sets of downwind receptors: (1) Receptors that EPA projects will have nonattainment problems; and, (2) receptors that EPA projects may have difficulty maintaining the NAAQS based on historic variation in air quality. To identify areas that may have problems attaining or maintaining these air quality standards, EPA projected a suite of future air quality design values, based on measured data during the period 2003 through 2007. EPA used the average of these future design values to assess whether an area will be in nonattainment. EPA used the maximum projected future design value to assess whether an area may have difficulty maintaining the relevant NAAQS (*i.e.,* whether an area has a reasonable possibility of being in nonattainment under adverse emission and weather conditions). Section V.C of this preamble details the Transport Rule's approach to identify downwind nonattainment and maintenance areas.

After identifying downwind nonattainment and/or maintenance areas, EPA next used air quality modeling to determine which upwind states are projected to contribute at or above threshold levels to the air quality problems in those areas. Section V.D details the choice of air quality thresholds and the approach to determine how much each upwind state contributes. States whose contributions meet or exceed the threshold levels were analyzed further, as detailed in section VI, to determine whether they significantly contribute to nonattainment or interfere with maintenance of a relevant NAAQS, and if so, the quantity of emissions that constitute their significant contribution and interference with maintenance.

When EPA proposed this air-quality and cost-based multi-factor approach to identify emissions that constitute significant contribution to nonattainment and interference with maintenance from upwind states with respect to the 1997 ozone, annual $PM_{2.5}$, and 2006 24-hour $PM_{2.5}$ NAAQS, the Agency indicated that the approach was designed to be applicable to both current and potential future ozone and $PM_{2.5}$ NAAQS (75 FR 45214). EPA believes that the Transport Rule's approach of using air-quality thresholds to determine upwind-to-downwind-state linkages and using the air-quality and cost-based multi-factor approach to determine the quantity of emissions that each upwind state must eliminate, *i.e.,* the state's significant contribution to nonattainment and interference with maintenance, could serve as a precedent for quantifying upwind state emission reduction responsibilities with respect

[6] In this preamble, EPA uses the terms ''significant contribution'' and ''interference with maintenance'' to refer to the emissions that must be prohibited pursuant to section 110(a)(2)(D)(i)(I) because they significantly contribute to nonattainment or interfere with maintenance of the NAAQS in another state.

to potential future NAAQS, as discussed further in section VI.A of this preamble. The Agency further believes that the final Transport Rule demonstrates the strong value of this approach for addressing the role of interstate transport of air pollution in communities' ability to comply with current and future NAAQS.

EPA thus identified specific emission reduction responsibilities for each upwind state found to significantly contribute to nonattainment or interfere with maintenance in other states. Using that information, EPA developed individual state budgets for emissions from covered units under the Transport Rule. The Transport Rule emission budgets are based on EPA's state-by-state analysis of each upwind state's significant contribution to nonattainment and interference with maintenance. Because each state's budget is directly linked to this state-specific analysis of the state's obligations pursuant to section 110(a)(2)(D)(i)(I), this approach addresses the Court's concerns about the development of CAIR budgets.

In this rule, EPA is finalizing SO_2 and annual NO_X budgets for each state covered for the 24-hour and/or annual $PM_{2.5}$ NAAQS and an ozone-season NO_X budget for each state covered for the ozone NAAQS. A state's emission budget is the quantity of emissions that will remain from covered units under the Transport Rule after elimination of significant contribution to nonattainment and interference with maintenance in an average year (*i.e.,* before accounting for the inherent variability in power system operations).[7]

Baseline power sector emissions from a state can be affected by changing weather patterns, demand growth, or disruptions in electricity supply from other units or from the transmission grid. As a consequence, emissions could vary from year to year even in a state where covered sources have installed all controls and taken all measures necessary to eliminate the state's significant contribution to nonattainment and interference with maintenance. As described in detail in sections VI and VII of this preamble, the Transport Rule accounts for the inherent variability in power system operations through ''assurance provisions'' based on state-specific variability limits which extend above the state budgets to form each state's ''assurance level.'' The state assurance levels take into account the inherent variability in baseline emissions from year to year. The final Transport Rule FIPs will implement assurance provisions starting in 2012 as discussed in section VII, below.

The emission reduction requirements (*i.e.,* the ''remedy'') EPA is promulgating in this rule respond to the Court's concerns that in CAIR, EPA had not shown that the emission reduction requirements would get all necessary reductions within the state as required by section 110(a)(2)(D)(i)(I). The Transport Rule FIPs include assurance provisions specifically designed to ensure that no state's emissions are allowed to exceed that specific state's budget plus the variability limit (*i.e.,* the state's assurance level).

Each state's Transport Rule SO_2, annual NO_X, or ozone-season NO_X emission budget is composed of a number of emission allowances (''allowances'') equivalent to the tonnage of that specific state budget. Under the Transport Rule FIPs, EPA is distributing (''allocating'') allowances under each state's budget to covered units in that state. In this rule, EPA analyzed each individual state's significant contribution to nonattainment and interference with maintenance and calculated budgets that represent each state's emissions after the elimination of those prohibited emissions in an average year. The methodology used to allocate allowances to individual units in a particular state has no impact on that state's budget or on the requirement that the state's emissions not exceed that budget plus the variability limit; the allocation methodology therefore has no impact on the rule's ability to satisfy the statutory mandate of CAA section 110(a)(2)(D)(i)(I).

The Transport Rule's approach to allocate emission allowances to existing units is based on historic heat-input data, as detailed in section VII.D of this preamble. The Transport Rule SO_2, annual NO_X, and ozone-season NO_X emission allowances each authorize the emission of one ton of SO_2, annual NO_X, or ozone-season NO_X emissions, respectively, during a Transport Rule control period, and are the currency in the Transport Rule's air quality-assured trading programs. As discussed in section IX.A.2 below, EPA is creating these Transport Rule allowances as distinct compliance instruments with no relation to allowances from the CAIR trading programs. EPA agrees with the general principle that it is desirable, where possible, to provide continuity under successive regulatory trading programs, for example through the carryover of allowances from one program into a subsequent one. However, EPA is promulgating the Transport Rule as a court-ordered replacement for (not a successor to) CAIR's trading programs. In light of the specific circumstances of this case, including legal and technical issues discussed in Section IX.A.2 below, the final rule will not allow any carryover of banked SO_2 or NO_X allowances from the Title IV or CAIR trading programs. EPA will strongly consider administrative continuity of this rule's trading programs under any future actions designed to address related problems of interstate transport of air pollution. A state may submit a SIP revision under which the state (rather than EPA) would determine allocations for one or more of the Transport Rule trading programs beginning with vintage year 2013 or later allowances.[8] Section X of this preamble discusses the final rule's provisions for SIP submissions in detail.

Table III–1 lists states covered by the Transport Rule for $PM_{2.5}$ and ozone. It also, with respect to $PM_{2.5}$, identifies whether EPA determined the state was significantly contributing to nonattainment or interfering with maintenance of the 1997 annual $PM_{2.5}$ NAAQS, the 2006 24-hour $PM_{2.5}$ NAAQS, or both. As discussed below, the Transport Rule sorts the states required to reduce SO_2 emissions due to their contribution to $PM_{2.5}$ downwind into two groups of varying reduction stringency, with ''Group 1'' states subject to greater SO_2 reduction stringency than ''Group 2'' states starting in 2014. Table III–1 also lists which SO_2 Group each of the states is in.

[7] For the states discussed above for which EPA has quantified the minimum amount of emission reductions needed to make measurable progress toward satisfying the state's section 110(a)(2)(D)(i)(I) responsibility, the emission budget is the quantity of emissions that will remain from covered units after removal of those emissions.

[8] This final rule allows states to make 2013 allowance allocations through the use of a SIP revision that is narrower in scope than the other SIP revisions states can use to replace the FIPs and/or to make allocation decisions for 2014 and beyond, as discussed in section X.

TABLE III–1—STATES THAT SIGNIFICANTLY CONTRIBUTE TO NONATTAINMENT OR INTERFERE WITH MAINTENANCE OF A NAAQS DOWNWIND IN THE FINAL TRANSPORT RULE

State	1997 Ozone NAAQS	1997 Annual $PM_{2.5}$ NAAQS	2006 24-Hour $PM_{2.5}$ NAAQS	SO_2 group
Alabama	X	X	X	2
Arkansas	X			
Florida	X			
Georgia	X	X	X	2
Illinois	X	X	X	1
Indiana	X	X	X	1
Iowa		X	X	1
Kansas			X	2
Kentucky	X	X	X	1
Louisiana	X			
Maryland	X	X	X	1
Michigan		X	X	1
Minnesota			X	2
Mississippi	X			
Missouri		X	X	1
Nebraska			X	2
New Jersey	X		X	1
New York	X	X	X	1
North Carolina	X	X	X	1
Ohio	X	X	X	1
Pennsylvania	X	X	X	1
South Carolina	X	X		2
Tennessee	X	X	X	1
Texas	X	X		2
Virginia	X		X	1
West Virginia	X	X	X	1
Wisconsin		X	X	1
Number of States	20	18	21	

As explained in this preamble, EPA has improved and updated both steps of its significant contribution analysis. It updated and improved the modeling platforms and modeling inputs used to identify states with contributions to certain downwind receptors that meet or exceed specified thresholds. It also updated and improved its analysis for identifying any emissions within such states that constitute the state's significant contribution to nonattainment or interference with maintenance. Therefore, the results of the analysis conducted for the final rule differ somewhat from the results of the analysis conducted for the proposal.[9]

With respect to the 1997 ozone NAAQS, the analysis EPA conducted for the proposal did not identify Wisconsin, Iowa and Missouri as states that significantly contribute to nonattainment or interfere with maintenance of the ozone NAAQS in another state. However, the analysis conducted for the final rule shows that emissions from these states do significantly contribute to nonattainment or interfere with maintenance of the ozone NAAQS in another state. EPA is not issuing FIPs with respect to the 1997 ozone NAAQS or finalizing ozone season NO_X budgets for these states in this rule. EPA is publishing a supplemental notice of proposed rulemaking that will provide an opportunity for public comment on our conclusion that these states significantly contribute to nonattainment or interfere with maintenance of the 1997 ozone NAAQS.

In the other direction, the analysis conducted for the proposal supported EPA's conclusion at the time that Connecticut, Delaware, and the District of Columbia significantly contributed to nonattainment or interfered with maintenance with respect to the 1997 ozone NAAQS, whereas the modeling for the final rule no longer supports that conclusion for those states.

Additionally, the modeling conducted for the final rule identified two ozone maintenance receptors that were not identified in the modeling conducted for the proposal—Allegan County (MI) and Harford County (MD). Five states that EPA identified as significantly contributing to maintenance problems at the Allegan and/or Harford County receptors in the modeling for the final rule uniquely contribute to these receptors, *i.e.,* absent these receptors the states would not be covered by the Transport Rule ozone-season program. The five states that uniquely contribute to these receptors are Iowa, Kansas, Michigan, Oklahoma, and Wisconsin. EPA is not issuing FIPs with respect to the 1997 ozone NAAQS or finalizing ozone-season NO_X budgets for these states in this rule. EPA is publishing a supplemental notice of proposed rulemaking that will provide an opportunity for public comment on our conclusion that these states significantly contribute to nonattainment or interfere with maintenance of the 1997 ozone NAAQS.

EPA did not change its methodology between the proposed Transport Rule and the final Transport Rule for identifying upwind states that significantly contribute to nonattainment or interfere with maintenance in other states; nor did EPA change its methodology for identifying receptors of concern with respect to maintenance of the 1997 ozone NAAQS. The final rule's air quality modeling identifies the new states and new receptors described above based on updated input information (including emission inventories), much of which was provided to EPA through public comment on the proposal and subsequent NODAs. Section V of this preamble details the approach EPA used

[9] EPA updated its modeling platforms and modeling inputs in response to public comments received on the proposed Transport Rule and subsequent NODAs and performed other standard updates.

to identify contributing states and receptors of concern.

With respect to the annual $PM_{2.5}$ NAAQS, the analysis EPA conducted for the proposal supported EPA's conclusion that the states of Delaware, the District of Columbia, Florida, Louisiana, Minnesota, New Jersey, and Virginia were significantly contributing to nonattainment and interfering with maintenance of the annual $PM_{2.5}$ NAAQS while the final rule's analysis does not. Also, with respect to the 24-hour $PM_{2.5}$ NAAQS, the analysis conducted for the proposal supported EPA's conclusion that the states of Connecticut, Delaware, the District of Columbia, and Massachusetts were significantly contributing to nonattainment or interfering with maintenance in other states while the analysis conducted for the final rule did not.

In the proposal EPA also requested comment on whether Texas should be included in the Transport Rule for annual $PM_{2.5}$. EPA's analysis for the proposal showed that emissions in Texas would significantly contribute to nonattainment or interfere with maintenance of the annual $PM_{2.5}$ NAAQS if Texas were not included in the rule for $PM_{2.5}$. The proposal did not include an illustrative budget for Texas or illustrative allowance allocations. However, the budgets and allowance allocations provided for other states in the proposal were included solely to illustrate the result of applying EPA's proposed methodology for quantifying significant contribution to the data EPA proposed to use. EPA provided an ample opportunity for comment on this methodology and on the data, including data regarding emissions from Texas sources, used in the significant contribution analysis. EPA received numerous comments on and corrections to Texas-specific data. The modeling conducted for the final rule demonstrates that Texas significantly contributes to nonattainment or interferes with maintenance of the annual $PM_{2.5}$ NAAQS in another state. EPA provided a full opportunity for comment on whether Texas should be included in the rule for annual $PM_{2.5}$, as well as on the methodology and data used for the significant contribution analysis for the final rule. EPA therefore believes its determination that Texas must be included in the rule for annual $PM_{2.5}$ is a logical outgrowth of its proposal.

With respect to the 24-hour $PM_{2.5}$ NAAQS, the analysis EPA conducted for the proposal did not identify Texas as a state that significantly contributes to nonattainment or interferes with maintenance of 24-hour $PM_{2.5}$ in another state. However, the analysis conducted for the final rule shows that emissions from Texas do significantly contribute to nonattainment of the 24-hour $PM_{2.5}$ NAAQS in another state. EPA is not issuing a FIP for Texas with respect to the 24-hour $PM_{2.5}$ NAAQS in this rule. However, EPA believes that the FIP for Texas with respect to the 1997 annual $PM_{2.5}$ NAAQS also addresses the emissions in Texas that significantly contribute to nonattainment and interference with maintenance of the 2006 24-hour $PM_{2.5}$ NAAQS in another state.

The final rule, however, does not cover the states of Connecticut, Delaware, the District of Columbia, Florida, Louisiana, or Massachusetts for annual or 24-hour $PM_{2.5}$ as the analysis for the final rule does not support their inclusion.

The Transport Rule FIPs require the 23 states covered for purposes of the 24-hour and/or annual $PM_{2.5}$ NAAQS to reduce SO_2 and annual NO_X emissions by specified amounts. The FIPs require the 20 states covered for purposes of the ozone NAAQS to reduce ozone-season NO_X emissions by specified amounts. As discussed in detail in section VI, below, the 23 states covered for the 24-hour and/or annual $PM_{2.5}$ NAAQS are grouped in two tiers reflecting the stringency of SO_2 reductions required to eliminate that state's significant contribution to nonattainment and interference with maintenance downwind. The more-stringent SO_2 tier (''Group 1'') is comprised of the 16 states indicated in Table III–1, above, and the less-stringent SO_2 tier (''Group 2'') is comprised of the 7 states identified in the table. The two SO_2 trading programs are exclusive, *i.e.,* a covered source in a Group 1 state may use only a Group 1 allowance for compliance, and likewise a source in a Group 2 state may use only a Group 2 allowance for compliance. In Group 1 states, the SO_2 reduction requirements become more stringent in the second phase, which starts in 2014.

In response to the Court's opinion in *North Carolina,* EPA has coordinated the Transport Rule's compliance deadlines with the NAAQS attainment deadlines that apply to the downwind nonattainment and maintenance areas. The Transport Rule requires that all significant contribution to nonattainment and interference with maintenance identified in this action with respect to the 1997 annual $PM_{2.5}$ NAAQS and the 2006 24-hour $PM_{2.5}$ NAAQS be eliminated by no later than 2014, with an initial phase of reductions starting in 2012 to ensure that reductions are made as expeditiously as practicable and, consistent with the Court's remand, to ''preserve the environmental values covered by CAIR.'' Sources must comply by January 1, 2012 and January 1, 2014 for the first and second phases, respectively.

With respect to the 1997 ozone NAAQS, the Transport Rule requires NO_X reductions starting in 2012 to ensure that reductions are made as expeditiously as practicable to assist downwind state attainment and maintenance of the standard. Sources must comply by May 1, 2012. The Transport Rule's compliance schedule and alignment with downwind NAAQS attainment deadlines are discussed in detail in section VII below.

Table III–2 shows projected Transport Rule emissions compared to projected base case emissions, and Table III–3 shows projected Transport Rule emissions compared to historical emissions (*i.e.,* 2005 emissions), for the power sector in all Transport Rule states. The ozone-season NO_X results shown in Tables III–2 and III–3 are based on analysis of the group of 26 states that would be covered for the ozone-season program if EPA finalizes the supplemental proposal regarding ozone-season requirements for Iowa, Kansas, Michigan, Missouri, Oklahoma, and Wisconsin.

TABLE III–2—PROJECTED SO_2 AND NO_X ELECTRIC GENERATING UNIT EMISSION REDUCTIONS IN COVERED STATES WITH THE TRANSPORT RULE COMPARED TO BASE CASE WITHOUT TRANSPORT RULE OR CAIR**

[Million tons]

	2012 Base case emissions	2012 Transport rule emissions	2012 Emission reductions	2014 Base case emissions	2014 Transport rule emissions	2014 Emission reductions
SO_2	7.0	3.0	4.0	6.2	2.4	3.9
Annual NO_X	1.4	1.3	0.1	1.4	1.2	0.2

TABLE III–2—PROJECTED SO_2 AND NO_X ELECTRIC GENERATING UNIT EMISSION REDUCTIONS IN COVERED STATES WITH THE TRANSPORT RULE COMPARED TO BASE CASE WITHOUT TRANSPORT RULE OR CAIR **—Continued

[Million tons]

	2012 Base case emissions	2012 Transport rule emissions	2012 Emission reductions	2014 Base case emissions	2014 Transport rule emissions	2014 Emission reductions
Ozone-Season NO_X	0.7	0.6	0.1	0.7	0.6	0.1

* Note that numbers may not sum exactly due to rounding.
** As explained in section V.B, EPA's base case projections for the Transport Rule assume that CAIR is not in place.

Notes: The SO_2 and annual NO_X emissions in this table reflect EGUs in the 23 states covered by this rule for purposes of the 24-hour and/or annual $PM_{2.5}$ NAAQS (Alabama, Georgia, Illinois, Indiana, Iowa, Kansas, Kentucky, Maryland, Michigan, Minnesota, Missouri, Nebraska, New Jersey, New York, North Carolina, Ohio, Pennsylvania, South Carolina, Tennessee, Texas, Virginia, West Virginia, and Wisconsin). The ozone-season NO_X emissions reflect EGUs in the 20 states covered by this rule for purposes of the ozone NAAQS (Alabama, Arkansas, Florida, Georgia, Illinois, Indiana, Kentucky, Louisiana, Maryland, Mississippi, New Jersey, New York, North Carolina, Ohio, Pennsylvania, South Carolina, Tennessee, Texas, Virginia, and West Virginia) and the six states that would be covered for the ozone NAAQS if EPA finalizes its supplemental proposal (Iowa, Kansas, Michigan, Missouri, Oklahoma, and Wisconsin).

TABLE III–3—PROJECTED SO_2 AND NO_X ELECTRIC GENERATING UNIT EMISSION REDUCTIONS IN COVERED STATES WITH THE TRANSPORT RULE COMPARED TO 2005 ACTUAL EMISSIONS

[Million tons]

	2005 Actual emissions	2012 Transport rule emissions	2012 Emission reductions from 2005	2014 Transport rule emissions	2014 Emission reductions from 2005
SO_2	8.8	3.0	5.8	2.4	6.4
Annual NO_X	2.6	1.3	1.3	1.2	1.4
Ozone-Season NO_X	0.9	0.6	0.3	0.6	0.3

Notes: The SO_2 and annual NO_X emissions in this table reflect EGUs in the 23 states covered by this rule for purposes of the 24-hour and/or annual $PM_{2.5}$ NAAQS (Alabama, Georgia, Illinois, Indiana, Iowa, Kansas, Kentucky, Maryland, Michigan, Minnesota, Missouri, Nebraska, New Jersey, New York, North Carolina, Ohio, Pennsylvania, South Carolina, Tennessee, Texas, Virginia, West Virginia, and Wisconsin). The ozone-season NO_X emissions reflect EGUs in the 20 states covered by this rule for purposes of the ozone NAAQS (Alabama, Arkansas, Florida, Georgia, Illinois, Indiana, Kentucky, Louisiana, Maryland, Mississippi, New Jersey, New York, North Carolina, Ohio, Pennsylvania, South Carolina, Tennessee, Texas, Virginia, and West Virginia) and the six states that would be covered for the ozone NAAQS if EPA finalizes its supplemental proposal (Iowa, Kansas, Michigan, Missouri, Oklahoma, and Wisconsin).

In addition to the emission reductions shown above, EPA projects other substantial benefits of the Transport Rule, as described in section VIII in this preamble. EPA used air quality modeling to quantify the improvements in $PM_{2.5}$ and ozone concentrations that are expected to result from the Transport Rule emission reductions in 2014. The Agency used the results of this modeling to calculate the average and peak reduction in annual $PM_{2.5}$, 24-hour $PM_{2.5}$, and 8-hour ozone concentrations for monitoring sites in the Transport Rule covered states (including the six states for which EPA issued a supplemental proposal for ozone-season NO_X requirements) in 2014.

For annual $PM_{2.5}$, the average reduction across all monitoring sites in covered states in 2014 is 1.41 microgram per meter cubed ($\mu g/m^3$) and the greatest reduction at a single site is 3.60 $\mu g/m^3$. For 24-hour $PM_{2.5}$, the average reduction across all monitoring sites in covered states in 2014 is 4.3 $\mu g/m^3$ and the greatest reduction at a single site is 11.6 $\mu g/m^3$. And finally, for 8-hour ozone, the average reduction across all monitoring sites in covered states in 2014 is 0.3 parts per billion (ppb) and the greatest is 3.9 ppb. *See* section VIII for further information on air quality improvements.

EPA estimated the Transport Rule's costs and benefits, including effects on sensitive and vulnerable and environmental justice communities. Table III–4, below, summarizes some of these results. Further discussion of the results is provided in preamble section VIII, below, and in the Regulatory Impact Analysis (RIA). Estimates here are subject to uncertainties discussed further in the RIA.

TABLE III–4.—SUMMARY OF ANNUAL BENEFITS, COSTS, AND NET BENEFITS OF THE FINAL TRANSPORT RULE IN 2014

[Billions of 2007$] [a]

Description	Transport rule remedy (billions of 2007 $)	
	3% discount rate	7% discount rate
Social costs	$0.81	$0.81.
Total monetized benefits [b]	$120 to $280	$110 to $250.
Net benefits (benefits-costs)	$120 to $280	$110 to $250.

[a] All estimates are for 2014, and are rounded to two significant figures.

[b] The total monetized benefits reflect the human health benefits associated with reducing exposure to $PM_{2.5}$ and ozone and the welfare benefits associated with improved visibility in Class I areas. The reduction in premature mortalities account for over 90 percent of total monetized $PM_{2.5}$ and ozone benefits.

As a result of updated analyses and in response to public comments, the final Transport Rule differs from the proposal in a number of ways. The differences between proposal and final rule are discussed throughout this preamble. Some key changes between proposal and final rule are that EPA:

- Updated emission inventories (resulting in generally lower base case emissions). *See* section V.C.
- Updated modeling and analysis tools (including improved alignment between air quality estimates and air quality modeling results). *See* sections V and VI.
- Updated conclusions regarding which states significantly contribute to nonattainment or interfere with maintenance of the NAAQS in other states. *See* Table III–1 and sections V.D and VI.
- Recalculated state budgets and variability limits, *i.e.,* state assurance levels, based on updated modeling. *See* section VI.
- Simplified variability limits for one-year application only. *See* section VI.E.
- Revised allocation methodology for existing and new units and revised new unit set-asides for new units in Transport Rule states and new units potentially locating in Indian country. *See* section VII.D.
- Changed start of assurance provisions to 2012 and increased assurance provision penalties. *See* section VII.E.
- Removed opt-in provisions. *See* section VII.B
- Added provisions for full and abbreviated Transport Rule SIP revisions. *See* section X.

EPA conducted substantial stakeholder outreach in developing the Transport Rule, starting with a series of ''listening sessions'' in the spring of 2009 with states, nongovernmental organizations, and industry. EPA docketed stakeholder-related materials in the Transport Rule docket (Docket ID No. EPA–HQ–OAR–2009–0491). The Agency conducted general teleconferences on the rule with tribal environmental professionals, conducted consultation with tribal governments, and hosted a webinar for communities and tribal governments. EPA continued to provide updates to regulatory partners and stakeholders through several conference calls with states as well as at conferences where EPA officials often made presentations. The Agency conducted additional stakeholder outreach during the public comment period. EPA responded to extensive public comments received during the public comment periods on the proposed rule and associated NODAs.

This Transport Rule is one of a series of regulatory actions to reduce the adverse health and environmental impacts of the power sector. EPA is developing these rules to address judicial review of previous rulemakings and to issue rules required by environmental laws. Finalizing these rules will effectuate health and environmental protection mandated by Congress while substantially reducing uncertainty over the future regulatory obligations of power plants, which will assist the power sector in planning for compliance more cost effectively. The Agency is providing full opportunity for notice and comment for each rule.

As discussed above, rules to address transport under revised NAAQS, including the reconsidered 2008 ozone NAAQS, may result in additional emission reduction requirements for the power sector. In addition, existing Clean Air Act rules establishing best available retrofit technology (BART) requirements and other requirements for addressing visibility and regional haze may also result in future state requirements for certain power plant emission reductions where needed.

On May 3, 2011 (76 FR 24976), EPA proposed national emission standards for hazardous air pollutants from coal- and oil-fired electric utility steam generating units under CAA section 112(d), also called Mercury and Air Toxics Standards (MATS), and proposed revised new source performance standards for fossil fuel-fired EGUs under section 111(b). As discussed in the EPA-led public listening sessions during February and March 2011, EPA is preparing to propose innovative, cost-effective and flexible greenhouse gas (GHG) emissions performance standards under section 111 for steam electric generating units, the largest U.S. source of greenhouse gas emissions. On April 20, 2011 (76 FR 22174), EPA proposed requirements under section 316(b) of the Clean Water Act for existing power generating facilities, manufacturing and industrial facilities that withdraw more than two million gallons per day of water from waters of the U.S. and use at least twenty-five percent of that water exclusively for cooling purposes. On June 21, 2010 (75 FR 35128), the Agency proposed to regulate coal combustion residuals (CCRs) under the Resource Conservation and Recovery Act to address the risks from the disposal of CCRs generated from the combustion of coal at electric utilities and independent power producers.

EPA will coordinate utility-related air pollution rules with each other and with other actions affecting the power sector including these rules from EPA's Office of Water and its Office of Resource Conservation and Recovery to the extent consistent with legal authority in order to provide timely information needed to support regulated sources in making informed decisions. Use of a small number of air pollution control technologies, widely deployed, can assist with compliance for multiple rules. EPA also notes that the flexibility inherent in the allowance-trading mechanism included in the Transport Rule affords utilities themselves a degree of latitude to determine how best to integrate compliance with the emission reduction requirements of this rule and those of the other rules. EPA will pursue energy efficiency improvements in the use of electricity throughout the economy, along with other federal agencies, states and other groups, which will contribute to additional environmental and public health improvements while lowering the costs of realizing those improvements.

IV. Legal Authority, Environmental Basis, and Correction of CAIR SIP Approvals

A. EPA's Authority for Transport Rule

The statutory authority for this action is provided by the CAA, as amended, 42 U.S.C. 7401 *et seq.* Section 110(a)(2)(D) of the CAA, often referred to as the ''good neighbor'' provision of the Act, and requires states to prohibit certain emissions because of their impact on air quality in downwind states. Specifically, it requires all states, within 3 years of promulgation of a new or revised NAAQS, to submit SIPs that prohibit certain emissions of air pollutants because of the impact they would have on air quality in other states. 42 U.S.C. 7410(a)(2)(D). This action addresses the requirement in section 110(a)(2)(D)(i)(I) regarding the prohibition of emissions within a state that will significantly contribute to nonattainment or interfere with maintenance of the NAAQS in any other

state. EPA has previously issued two rules interpreting and clarifying the requirements of section 110(a)(2)(D)(i)(I). The NO_X SIP Call, promulgated in 1998, was largely upheld by the U.S. Court of Appeals for the DC Circuit in *Michigan,* 213 F.3d 663. CAIR, promulgated in 2005, was remanded by the DC Circuit in *North Carolina,* 531 F.3d 896, *modified on reh'g,* 550 F.3d. 1176. These decisions provide additional guidance regarding the requirements of section 110(a)(2)(D)(i)(I) and are discussed later in this notice.

Section 301(a)(1) of the CAA also gives the Administrator of EPA general authority to prescribe such regulations as are necessary to carry out her functions under the Act. 42 U.S.C. 7601(a)(1). Pursuant to this section, EPA has authority to clarify the applicability of CAA requirements. In this action, among other things, EPA is clarifying the applicability of section 110(a)(2)(D)(i)(I) by identifying SO_2 and NO_X emissions that must be prohibited pursuant to this section with respect to the $PM_{2.5}$ NAAQS promulgated in 1997 and 2006 and the 8-hour ozone NAAQS promulgated in 1997.

Section 110(c)(1) requires the Administrator to promulgate a FIP at any time within 2 years after the Administrator finds that a state has failed to make a required SIP submission, finds a SIP submission to be incomplete or disapproves a SIP submission unless the state corrects the deficiency, and the Administrator approves the SIP revision, before the Administrator promulgates a FIP. 42 U.S.C. 7410(c)(1).

Tribes are not required to submit state implementation plans. However, as explained in EPA's regulations outlining Tribal Clean Air Act authority, EPA is authorized to promulgate FIPs for Indian country as necessary or appropriate to protect air quality if a tribe does not submit and get EPA approval of an implementation plan. *See* 40 CFR 49.11(a); see also 42 U.S.C. section 7601(d)(4).

Section 110(k)(6) of the CAA gives the Administrator authority, without any further submission from a state, to revise certain prior actions, including actions to approve SIPs, upon determining that those actions were in error.

B. Rulemaking History

The Transport Rule FIPs will limit the interstate transport of emissions of NO_X and SO_2 within 27 states in the eastern, midwestern, and southern United States that affect the ability of downwind states to attain and maintain compliance with the 1997 and 2006 $PM_{2.5}$ NAAQS and the 1997 ozone NAAQS.[10] Prior to this Transport Rule, CAIR was EPA's most recent regulatory action in a longstanding series of regulatory initiatives to address interstate transport of air pollution. The proposed Transport Rule preamble provides more information on EPA actions prior to CAIR (75 FR 45221–45225).

CAIR, promulgated May 12, 2005 (70 FR 25162), required 29 states to adopt and submit revisions to their SIPs to eliminate SO_2 and NO_X emissions that contribute significantly to downwind nonattainment of the $PM_{2.5}$ and ozone NAAQS promulgated in 1997. The states covered by CAIR were similar but not identical to the states covered by the Transport Rule. The CAIR FIPs, promulgated April 26, 2006 (71 FR 25328), regulated electric generating units in the covered states and achieved CAIR's emission reduction requirements unless or until states had approved SIPs to achieve the required reductions.

In July 2008, the DC Circuit Court found CAIR and the CAIR FIPs unlawful and vacated CAIR. *North Carolina,* 531 F.3d at 929–30. However, the Court subsequently remanded CAIR to EPA without vacatur in order to ''at least temporarily preserve the environmental values covered by CAIR.'' *North Carolina,* 550 F.3d at 1178. CAIR requirements have remained in place and CAIR's emission trading programs have operated while EPA developed replacement rules in response to the remand.

By promulgating the Transport Rule FIPs, EPA is responding to the Court's remand of CAIR and the CAIR FIPs and replacing those rules. The approaches EPA used in the Transport Rule to measure and address each state's significant contribution to downwind nonattainment and interference with maintenance are guided by and consistent with the Court's opinion in *North Carolina* and address the flaws in CAIR identified by the Court therein.

By notice of proposed rulemaking (Federal Implementation Plans To Reduce Interstate Transport of Fine Particulate Matter and Ozone, 75 FR 45210; August 2, 2010), EPA proposed the Transport Rule to identify and limit NO_X and SO_2 emissions within 32 states in the eastern, midwestern, and southern United States that affect the ability of downwind states to attain and maintain compliance with the 1997 and 2006 $PM_{2.5}$ NAAQS and the 1997 ozone NAAQS. EPA proposed to achieve the emission reductions under FIPs, which states may choose to replace by submitting SIPs for EPA approval. EPA proposed to limit emissions by regulating electric generating units in the 32 states with interstate emission trading programs and assurance provisions to ensure the required reductions occur in each covered state. EPA also requested comment on two alternative FIP remedies.

EPA supplemented the Transport Rule record with additional information relevant to the rulemaking in three NODAs for which EPA requested comments:

- Notice of Data Availability Supporting Federal Implementation Plans to Reduce Interstate Transport of Fine Particulate Matter and Ozone (75 FR 53613; September 1, 2010). This NODA provided an updated database of unit-level characteristics of EGUs included in EPA modeling, an updated version of the power sector modeling platform EPA used to support the final rule, and other input assumptions and data EPA provided for public review and comment.
- Notice of Data Availability Supporting Federal Implementation Plans To Reduce Interstate Transport of Fine Particulate Matter and Ozone: Revisions to Emission Inventories (75 FR 66055; October 27, 2010). This NODA provided additional information relevant to the rulemaking, including updated emission inventory data for 2005, 2012 and 2014 for several stationary and mobile source inventory components.
- Notice of Data Availability for Federal Implementation Plans To Reduce Interstate Transport of Fine Particulate Matter and Ozone: Request for Comment on Alternative Allocations, Calculation of Assurance Provision Allowance Surrender Requirements, New-Unit Allocations in Indian Country, and Allocations by States (76 FR 1109; January 7, 2011). This NODA provided additional information relevant to the rulemaking, including emissions allowance allocations for existing units calculated using two alternative methodologies, data supporting those calculations, information about an alternative approach to calculation of assurance provision allowance surrender requirements, allocations for new units locating in Indian country in Transport Rule states in the future, and provisions for states to submit SIPs providing for state allocation of allowances in the Transport Rule trading programs.

[10] As discussed in section III of this preamble, EPA is proposing to apply ozone-season NO_X requirements to additional states. If EPA finalizes that action as proposed, the total number of states covered by the Transport Rule FIPs would be 28.

C. Air Quality Problems and NAAQS Addressed

1. Air Quality Problems and NAAQS Addressed

a. Fine Particles

Fine particles are associated with a number of serious health effects including premature mortality, aggravation of respiratory and cardiovascular disease (as indicated by increased hospital admissions, emergency room visits, health-related absences from school or work, and restricted activity days), lung disease, decreased lung function, asthma attacks, and certain cardiovascular problems. In addition to effects on public health, fine particles are linked to a number of public welfare effects, including (1) Reduced visibility (haze) in scenic areas, (2) effects caused by particles settling on ground or water, such as: making lakes and streams acidic, changing the nutrient balance in coastal waters and large river basins, depleting the nutrients in soil, damaging sensitive forests and farm crops, and affecting the diversity of ecosystems, and (3) staining and damaging of stone and other materials, including culturally important objects such as statues and monuments.

In 1997, EPA revised the NAAQS for PM to add new annual and 24-hour standards for fine particles, using $PM_{2.5}$ as the indicator (62 FR 38652). These revisions established an annual standard of 15 μg/m³ and a 24-hour standard of 65 μg/m³. During 2006, EPA revised the air quality standards for $PM_{2.5}$. The 2006 standards decreased the level of the 24-hour fine particle standard from 65 μg/m³ to 35 μg/m³, and retained the annual fine particle standard at 15 μg/m³.

b. Ozone

Short-term (1- to 3-hour) and prolonged (6- to 8-hour) exposures to ambient ozone have been linked to a number of adverse health effects. At sufficient concentrations, short-term exposure to ozone can irritate the respiratory system, causing coughing, throat irritation, and chest pain. Ozone can reduce lung function and make it more difficult to breathe deeply. Breathing may become more rapid and shallow than normal, thereby limiting a person's normal activity. Ozone also can aggravate asthma, leading to more asthma attacks that may require a doctor's attention and the use of additional medication. Increased hospital admissions and emergency room visits for respiratory problems have been associated with ambient ozone exposures. Longer-term ozone exposure can inflame and damage the lining of the lungs, which may lead to permanent changes in lung tissue and irreversible reductions in lung function. A lower quality of life may result if the inflammation occurs repeatedly over a long time period (such as months, years, or a lifetime). There is also epidemiological evidence indicating a correlation between short-term ozone exposure and premature mortality.

In addition to causing adverse health effects, ozone affects vegetation and ecosystems, leading to reductions in agricultural crop and commercial forest yields; reduced growth and survivability of tree seedlings; and increased plant susceptibility to disease, pests, and other environmental stresses (*e.g.,* harsh weather). In long-lived species, these effects may become evident only after several years or even decades and have the potential for long-term adverse impacts on forest ecosystems. Ozone damage to the foliage of trees and other plants can also decrease the aesthetic value of ornamental species used in residential landscaping, as well as the natural beauty of our national parks and recreation areas. In 1997, at the same time we revised the $PM_{2.5}$ standards, EPA issued its final action to revise the NAAQS for ozone (62 FR 38856) to establish new 8-hour standards. In this action published on July 18, 1997, we promulgated identical revised primary and secondary ozone standards that specified an 8-hour ozone standard of 0.08 parts per million (ppm). Specifically, the standards require that the 3-year average of the fourth highest 24-hour maximum 8-hour average ozone concentration may not exceed 0.08 ppm. In general, the 8-hour standards are more protective of public health and the environment and more stringent than the pre-existing 1-hour ozone standards.

On March 12, 2008, EPA published a revision to the 8-hour ozone standard, lowering the level from 0.08 ppm to 0.075 ppm. On September 16, 2009, EPA announced it would reconsider these 2008 ozone standards. The purpose of the reconsideration is to ensure that the ozone standards are clearly grounded in science, protect public health with an adequate margin of safety, and are sufficient to protect the environment. EPA proposed revisions to the standards on January 19, 2010 (75 FR 2938) and anticipates issuing final standards soon.

c. Which NAAQS does this rule address?

This action addresses the requirements of CAA section 110(a)(2)(D)(i)(I) as they relate to:

(1) The 1997 annual $PM_{2.5}$ standard,

(2) The 2006 24-hour $PM_{2.5}$ standard, and

(3) The 1997 ozone standard.

The original CAIR and CAIR FIP rules, which pre-dated the 2006 $PM_{2.5}$ standards, addressed the 1997 ozone and 1997 $PM_{2.5}$ standards only.

In this action, EPA fully addresses, for the states covered by this rule, the requirements of CAA section 110(a)(2)(D)(i)(I) for the annual $PM_{2.5}$ standard of 15 μg/m³ and the 24-hour standard of 35 μg/m³. For the 1997 8-hour ozone standard of 0.08 ppm, EPA fully addresses the CAA section 110(a)(2)(D)(i)(I) requirements for some states covered by this rule, but for the remaining states EPA is conducting further analysis to determine whether further requirements are needed, as discussed in section III of this preamble.

This action does not address the CAA section 110(a)(2)(D)(i)(I) requirements for the revised ozone standards promulgated in 2008. These standards are currently under reconsideration. We are, however, actively conducting the technical analyses and other work needed to address interstate transport for the reconsidered ozone standard as soon as possible. We intend to issue as soon as possible a proposal to address the transport requirements with respect to the reconsidered standard.

This action addresses these CAA transport requirements through reductions in annual emissions of SO_2 and NO_X, and through reductions in ozone-season NO_X. The rationale for these reductions is discussed in detail later in the preamble.

d. Public Comments

EPA received comments on two issues related to the NAAQS regulated under the proposed FIPs.

A number of commenters believed that EPA's approach to ozone was inadequate, and that EPA should not have based the proposed requirements on the 1997 ozone NAAQS. These commenters cited EPA's 2008 revision to the standard which lowered the standard to 75 ppb, and noted that EPA's January 2010 proposal for reconsidered ozone NAAQS would, if finalized, further lower the primary NAAQS from 75 ppb to a value between 60 and 70 ppb. Accordingly, many of the commenters believed that EPA should have considered the 75 ppb level to be the maximum possible value moving forward, and that EPA should have used a value no greater than 75 ppb in its analysis.

EPA agrees with commenters that EPA and states should address interstate transport with respect to the tighter

ozone NAAQS as quickly as possible. EPA, as commenters noted, intends to propose a second rule to address interstate transport of ozone that will be appropriately configured for the revised level of the ozone NAAQS after reconsideration of the 2008 standard is finalized. EPA is mindful of the need for SIPs to provide for continuing ozone progress to meet the 75 ppb level of the 2008 NAAQS, or possibly lower levels based on the reconsideration. EPA believes that the ozone-season NO_X requirements of this rule will provide important initial assistance to states in this regard.

Some commenters questioned whether EPA had given states the opportunity to provide SIPs addressing transport under the 2006 $PM_{2.5}$ NAAQS, and thus questioned the appropriateness of the issuance of FIPs addressing those NAAQS. Those comments, and EPA's response, are discussed in detail in section IV.C.2.

2. FIP Authority for Each State and NAAQS Covered

The CAA requires and authorizes EPA to promulgate each of the Federal Implementation Plans in this final rule. Section 110(c)(1) of the CAA requires the Administrator to promulgate a FIP at any time within 2 years after the Administrator takes one of three distinct actions: (1) She finds that a state has failed to make a required SIP submission; (2) she finds a SIP submission to be incomplete; or (3) she disapproves a SIP submission. Once the Administrator has taken one of these actions with respect to a specific state's 110(a)(2)(D)(i)(I) obligation for a specific NAAQS, she has a legal obligation to promulgate a FIP to correct the SIP deficiency within 2 years. EPA is relieved of the obligation to promulgate a FIP only if two events occur before the FIP is promulgated: (1) The state submits a SIP correcting the deficiency; and (2) the Administrator approves the SIP revision. 42 U.S.C. 7410(c)(1).[11]

For each FIP in this rule,[12] EPA either has found that the state has failed to make a required 110(a)(2)(D)(i)(I) SIP submission, or has disapproved a SIP submission.[13] In addition, EPA has determined, in each case, that there has been no approval by the Administrator of a SIP submission correcting the deficiency prior to promulgation of the FIP. EPA's obligation to promulgate a FIP arose when the finding of failure to submit or disapproval was made, and in no case has it been relieved of that obligation.

Some commenters argued that EPA was relieved of its obligation to promulgate FIPs when it approved the CAIR SIPs for certain states. As an initial matter, EPA notes that this argument applies only to EPA's authority to promulgate FIPs with respect to the 1997 $PM_{2.5}$ and/or 1997 ozone NAAQS for a subset of states covered by the CAIR. It does not apply to EPA's authority to promulgate FIPs for the 2006 $PM_{2.5}$ NAAQS which was not addressed in CAIR. It also does not apply to EPA's authority to promulgate FIPs for the 1997 ozone and 1997 $PM_{2.5}$ NAAQS for states that remain subject to the CAIR FIPs, including the states that received EPA approval of abbreviated CAIR SIPs which allowed the states to allocate allowances while remaining subject to the CAIR FIPs.[14]

Further, the CAIR SIP approvals do not eliminate EPA's obligation and authority to promulgate a FIP to address the requirements of 110(a)(2)(D)(i)(I) because the Court in *North Carolina* v. *EPA,* 531 F.3d 896 (D.C. Cir. 2008) found that compliance with CAIR does not satisfy the requirement that each state prohibit all emissions within the state that significantly contribute to nonattainment or interfere with maintenance in another state. The Court's finding that CAIR was unlawful because it did not make measureable progress towards the statutory mandate of section 110(a)(2)(D)(i)(I) meant that the CAIR SIPs were not adequate to satisfy that mandate. The CAIR SIPs thus do not correct the SIP deficiencies identified in the 2005 findings of failure to submit. The SIPs remained in force for the limited purpose allowed by the Court—that is, to achieve interim reductions until EPA promulgated a rule to replace CAIR. Given the flaws the court identified with CAIR, EPA's approval of a CAIR SIP does not relieve it of the obligation to promulgate FIPs created under section 110(c)(1) of the CAA.

Further, to avoid any confusion, EPA has decided to correct, in this notice, the full CAIR SIP approvals for states covered by this rule and the CAA 110(a)(2)(D)(i) SIP approvals for states covered by CAIR to rescind any statements suggesting that the SIP submissions satisfied or relieved states of the obligation to submit SIPs to satisfy the requirements of section 110(a)(2)(D)(i)(I) or that EPA was relieved of its obligation and authority to promulgate FIPs under 110(a)(2)(D)(I)(i).

Some commenters further argued that states should be given additional time, following promulgation of the Transport Rule, to submit a SIP to meet the requirements of section 110(a)(2)(D)(i)(I) and that CAIR should remain in place in the meantime. Some commenters specifically suggested that EPA restart the ''FIP clock''[15] to give states this additional time. EPA does not interpret the CAA as giving it authority to extend the deadline for SIP submissions or restart the FIP clock. And nothing in the Act requires EPA to give the states another opportunity, following promulgation of the Transport Rule, to promulgate a SIP before EPA promulgates a FIP. The plain language of section 110(a)(1) of the Act requires the submission of SIPs that meet the requirements of 110(a)(2)(D)(i)(I) within 3 years after the promulgation of or revision of a primary NAAQS. *See* 42 U.S.C. 7410(a)(1). Section 110(a)(2)(D)(i)(I) SIPs for the 1997 ozone and $PM_{2.5}$ NAAQS were due in 2000 and 110(a)(2)(D)(i)(I) SIPs for the 2006 $PM_{2.5}$ NAAQS were due in 2009. While the statute gives EPA authority to prescribe a shorter period of time for states to make these SIP submissions, it does not give EPA authority to extend the 3-year deadline established by the Act. *See* 42 U.S.C. 7410(a)(1). The plain language of section 110(c)(1) of the Act, in turn, provides that EPA shall promulgate a FIP at any time within 2 years after the Administrator makes a finding of failure to make a required SIP

[11] The CAA provides that EPA is not relieved of its obligation to promulgate FIPs unless the state submits a SIP that corrects the deficiency and EPA approves the SIP. Nonetheless, in the preamble to the proposed rule, EPA indicated that for states not covered by CAIR which had 110(a)(2)(D)(i)(I) SIPs pending at the time of proposal, EPA would finalize the FIP only if EPA determined the submission was incomplete or disapproved the SIP submission. The only two states covered by this rule but not covered by CAIR are Kansas and Nebraska. Both Kansas and Nebraska are covered by this rule based only on their significant contribution to nonattainment or interference with maintenance of the 2006 $PM_{2.5}$ NAAQS. EPA has not received a 110(a)(2)(D)(i)(I) submission from Nebraska with respect to the requirements of the 2006 $PM_{2.5}$ NAAQS. EPA disapproved a SIP submission from Kansas with respect to the requirements of 110(a)(2)(D)(i)(I) for the 2006 $PM_{2.5}$ NAAQS.

[12] In this action, EPA is issuing 59 FIPs. EPA is issuing 20 FIPs to remedy SIP deficiencies relating to the 110(a)(2)(D)(i)(I) requirements for the 1997 ozone NAAQS. EPA is also issuing 18 FIPs to remedy SIP deficiencies relating to the 1997 $PM_{2.5}$ NAAQS. Finally, EPA is issuing 21 FIPs to remedy SIP deficiencies relating to the 2006 $PM_{2.5}$ NAAQS.

[13] The specific findings made and actions taken by EPA are described in greater detail in the TSD entitled ''Status of CAA 110(a)(2)(D)(i)(I) SIPs.''

[14] States may also have received approval to expand the applicability of the CAIR NO_X ozone season program to include all units subject to the NO_X Budget Program, allow opt-ins, or provide for distribution of a Compliance Supplement Pool under the CAIR NO_X (annual) program.

[15] ''FIP clock'' is a term used to describe EPA's responsibility found in CAA Section 110(c)(1) to promulgate a FIP within 2 years after either: Finding that a state has not submitted a required SIP revision or that a submitted SIP revision is incomplete; or disapproving a SIP revision.

submission of disapproves, in whole or in part, a SIP submission. *See* 42 U.S.C. 7410(c)(1). EPA does not have authority to set aside the specific deadlines established in the statute, and neither provision allows for the deadlines to be extended or to run from promulgation by EPA of a rule to quantify the state's specific obligations pursuant to section 110(a)(2)(D)(i)(I). The Act does not require EPA to promulgate a rule or issue guidance regarding the specific requirements of section 110(a)(2)(D)(i)(I) in advance of the SIP submittal deadline, much less require EPA to promulgate such a rule a specific amount of time before the SIP submittal deadline. For these reasons, EPA has neither authority to alter the SIP submittal deadline nor authority to alter the statute provision regarding when EPA's obligation to promulgate a FIP is triggered.

Finally, EPA does not believe it would be appropriate, in light of the Court's decision in *North Carolina,* to establish a lengthy transition period to the rule that will replace CAIR. The Court decision remanding CAIR without vacatur stressed the court's conclusion that CAIR was deeply flawed and emphasized EPA's obligation to remedy those flaws expeditiously. *North Carolina,* 550 F.3d 1176. Although the Court did not set a specific deadline for corrective action, the Court took care to note that the effect of its opinion would not be delayed ''indefinitely'' and that petitioners could bring a mandamus petition if EPA were to fail to modify CAIR in a manner consistent with its prior opinion. *Id.* Given the Court's emphasis on remedying CAIR's flaws expeditiously, EPA does not believe it would be appropriate to establish a lengthy transition period to the rule which is to replace CAIR.

3. Additional Information Regarding CAA Section 110(a)(2)(D)(i)(I) SIPs for States in the Transport Rule Modeling Domain

This final rule quantifies out-of-state contributions for the 38 states that are fully contained within the 12 kilometers (km) eastern U.S. modeling domain. EPA is making no specific finding for states that are not fully contained within the eastern 12 km modeling domain. EPA did not conduct a contribution analysis or make any specific finding for New Mexico, Colorado, Wyoming, and Montana since they are only partially contained within the 12 km modeling domain. With regard to the 1997 $PM_{2.5}$ NAAQS and 2006 $PM_{2.5}$ NAAQS, EPA believes that states that are included in this 38 state modeling domain will meet their section 110(a)(2)(D)(i)(I) obligations to address the ''significant contribution'' and ''interference with maintenance'' requirements by complying with the requirements in this rule. With regard to the 1997 ozone NAAQS, EPA believes that states that are included in this 38 state modeling domain will meet their section 110(a)(2)(D)(i)(I) obligations to address the ''significant contribution'' and ''interference with maintenance'' requirements by complying with the requirements in this rule, except for the 10 states found to significantly contribute to nonattainment or interference of maintenance in either Houston or Baton Rouge (*i.e.,* Alabama, Arkansas, Georgia, Illinois, Indiana, Kentucky, Louisiana, Mississippi, Tennessee, and Texas). States that are in the 38 state modeling domain, and that are not found to be contributing significantly to nonattainment or interfering with maintenance for any NAAQS evaluated in the modeling for the final rule, could rely on this analysis as technical support that their existing or future interstate transport SIP submittals are adequate to address the transport requirements of 110(a)(2)(D)(i)(I). For example, this rule finds that South Carolina significantly contributes to nonattainment and interferes with maintenance of the 1997 ozone NAAQS and the 1997 $PM_{2.5}$ NAAQS in downwind states. The technical support for the rule does not show that South Carolina significantly contributes to nonattainment or interferes with maintenance of the 2006 $PM_{2.5}$ NAAQS in downwind states. EPA believes that South Carolina can make a negative declaration concluding that the state does not significantly contribute to nonattainment or interfere with maintenance in other states with regard to the 2006 $PM_{2.5}$ NAAQS.

D. Correction of CAIR SIP Approvals

In this action, EPA is also correcting its prior approvals of CAIR related SIP submissions and CAA 110(a)(2)(D)(i) SIP submissions from Alabama, Arkansas, Connecticut, Florida, Georgia, Illinois, Indiana, Iowa, Kentucky, Louisiana, Maryland, Massachusetts, Minnesota, Mississippi, Missouri, New York, North Carolina, Ohio, Pennsylvania, South Carolina, Virginia and West Virginia to rescind any statements that the SIP submissions either satisfy or relieve the state of the obligation to submit a SIP to satisfy the requirements of section 110(a)(2)(D)(i)(I) with respect to the 1997 ozone and/or 1997 $PM_{2.5}$ NAAQS or any statements that EPA's approval of the SIP submissions either relieve EPA of the obligation to promulgate a FIP or remove EPA's authority to promulgate a FIP. This action is based on EPA's determination that those SIP approvals were in error to the extent they provided explicitly or implicitly that compliance with CAIR satisfies the requirements of 110(a)(2)(D)(i)(I) with respect to the 1997 ozone and 1997 $PM_{2.5}$ NAAQS. The July 2008 decision of the DC Circuit held, among other things, that the CAIR rule did not ''achieve[] something measureable toward the goal of prohibiting sources 'within the State' from contributing to nonattainment or interfering with maintenance in 'any other State.''' *North Carolina,* 531 F.3d 908; see also, *e.g., id.* at 916 (EPA not exercising its authority to make measureable progress towards the goals of section 110(a)(2)(D)(i)(I) because the emission budgets were insufficiently related to the statutory mandate). EPA's actions to approve CAIR SIP submittals as satisfying the requirements of section 110(a)(2)(D)(i)(I), based on the flawed determination in CAIR that compliance with CAIR satisfied those statutory requirements, were thus in error as were the separate actions taken to approve section 110(a)(2)(D)(i)(I) submissions that relied wholly or in part on CAIR.

The approval for Alabama titled ''Approval and Promulgation of Implementation Plans; Alabama; Clean Air Interstate Rule'' which is hereby corrected was originally published in the **Federal Register** on October 1, 2007 (72 FR 55659).

The approval for Arkansas titled ''Approval and Promulgation of Implementation Plans; Arkansas; Clean Air Interstate Rule Nitrogen Oxides Ozone Season Trading Program'' which is hereby corrected was originally published in the **Federal Register** on September 26, 2007 (72 FR 54556).

The approval for Connecticut titled ''Approval and Promulgation of Air Quality Implementation Plans; Connecticut; State Implementation Plan Revision to Implement the Clean Air Interstate Rule'' which is hereby corrected was originally published in the **Federal Register** on January 24, 2008 (73 FR 4105) and the approval for Connecticut titled ''Approval and Promulgation of Air Quality Implementation Plans; Connecticut; Interstate Transport of Pollution'' which is hereby corrected was originally published in the **Federal Register** on May 7, 2008 (73 FR 25516).

The approval for Florida titled ''Approval and Promulgation of Implementation Plans; Florida; Clean Air Interstate Rule'' which is hereby corrected was originally published in the **Federal Register** on October 12, 2007 (72 FR 58016).

The approval for Georgia titled ''Approval and Promulgation of Implementation Plans; Georgia; Clean Air Interstate Rule'' which is hereby corrected was originally published in the **Federal Register** on October 9, 2007 (72 FR 57202).

The approval for Illinois titled ''Approval of Implementation Plans of Illinois: Clean Air Interstate Rule'' which is hereby corrected was originally published in the **Federal Register** on October 16, 2007 (72 FR 58528).

The approval for Indiana titled ''Limited Approval of Implementation Plans of Indiana: Clean Air Interstate Rule'' which is hereby corrected was originally published in the **Federal Register** on October 22, 2007 (72 FR 59480) and the approval for Indiana titled ''Approval and Promulgation of Air Quality Implementation Plans; Indiana; Clean Air Interstate Rule'' which is hereby corrected was originally published in the **Federal Register** on November 29, 2010 (75 FR 72956).

The approval for Iowa titled ''Approval and Promulgation of Implementation Plans; Iowa; Clean Air Interstate Rule'' which is hereby corrected was originally published in the **Federal Register** on August 6, 2007 (72 FR 43539) and the approval for Iowa titled ''Approval and Promulgation of Implementation Plans; Iowa; Interstate Transport of Pollution'' which is hereby corrected was originally published in the **Federal Register** on March 8, 2007 (72 FR 10380).

The approval for Kentucky titled ''Approval of Implementation Plans of Kentucky: Clean Air Interstate Rule'' which is hereby corrected was originally published in the **Federal Register** on October 4, 2007 (72 FR 56623).

The approval for Louisiana titled ''Approval and Promulgation of Implementation Plans; Louisiana; Clean Air Interstate Rule Sulfur Dioxide Trading Program'' which is hereby corrected was originally published in the **Federal Register** on July 20, 2007 (72 FR 39741) and the approval for Louisiana titled ''Approval and Promulgation of Implementation Plans; Louisiana; Clean Air Interstate Rule Nitrogen Oxides Trading Program'' which is hereby corrected was originally published in the **Federal Register** on September 28, 2007 (72 FR 55064).

The approval for Maryland titled ''Approval and Promulgation of Air Quality Implementation Plans; Maryland; Clean Air Interstate Rule'' which is hereby corrected was originally published in the **Federal Register** on October 30, 2009 (74 FR 56117).

The approval for Massachusetts titled ''Approval and Promulgation of Air Quality Implementation Plans; Massachusetts; State Implementation Plan Revision to Implement the Clean Air Interstate Rule'' which is hereby corrected was originally published in the **Federal Register** on December 3, 2007 (72 FR 67854).

The approval for Minnesota titled ''Approval and Promulgation of Air Quality Implementation Plans; Minnesota; Interstate Transport of Pollution'' which is hereby corrected was originally published in the **Federal Register** on June 2, 2008 (73 FR 31366).

The approval for Mississippi titled ''Approval and Promulgation of Implementation Plans; Mississippi: Clean Air Interstate Rule'' which is hereby corrected was originally published in the **Federal Register** on October 3, 2007 (72 FR 56268).

The approval for Missouri titled ''Approval and Promulgation of Implementation Plans; Missouri; Clean Air Interstate Rule'' which is hereby corrected was originally published in the **Federal Register** on December 14, 2007 (72 FR 71073) and the approval of Missouri titled ''Approval and Promulgation of Implementation Plans; Missouri; Interstate Transport of Pollution'' which is hereby corrected was originally published in the **Federal Register** on May 8, 2007 (75 FR 25975).

The approval for New York titled ''Approval and Promulgation of Implementation Plans; New York: Clean Air Interstate Rule'' which is hereby corrected was originally published in the **Federal Register** on January 24, 2008 (73 FR 4109).

The approval for North Carolina titled ''Approval of Implementation Plans; North Carolina: Clean Air Interstate Rule'' which is hereby corrected was originally published in the **Federal Register** on October 5, 2007 (72 FR 56914) and the approval for North Carolina titled ''Approval and Promulgation of Air Quality Implementation Plans; North Carolina; Clean Air Interstate Rule'' which is hereby corrected was originally published in the **Federal Register** on November 30, 2009 (74 FR 62496).

The approval for Ohio titled ''Approval and Promulgation of Air Quality Implementation Plans; Ohio; Clean Air Interstate Rule'' which is hereby corrected was originally published in the **Federal Register** on February 1, 2008 (73 FR 6034) and the approval for Ohio titled ''Approval and Promulgation of Air Quality Implementation Plans; Ohio; Clean Air Interstate Rule'' which is hereby corrected was originally published in the **Federal Register** on September 25, 2009 (74 FR 48857).

The approval for Pennsylvania titled ''Approval and Promulgation of Air Quality Implementation Plans; Pennsylvania; Clean Air Interstate Rule; NO_X SIP Call Rule; Amendments to NO_X Control Rules'' which is hereby corrected was originally published in the **Federal Register** on December 10, 2009 (74 FR 65446).

The approval for South Carolina titled ''Approval of Implementation Plans of South Carolina: Clean Air Interstate Rule'' which is hereby corrected was originally published in the **Federal Register** on October 9, 2007 (72 FR 57209) and the approval for South Carolina titled ''Approval and Promulgation of Air Quality Implementation Plans; South Carolina; Clean Air Interstate Rule'' which is hereby corrected was originally published in the **Federal Register** on October 16, 2009 (74 FR 53167).

The approval for Virginia titled ''Approval and Promulgation of Air Quality Implementation Plans; Virginia; Clean Air Interstate Rule Budget Trading Programs'' which is hereby corrected was originally published in the **Federal Register** on December 28, 2007 (72 FR 73602).

The approval for West Virginia titled ''Approval and Promulgation of Air Quality Implementation Plans; West Virginia; Clean Air Interstate Rule'' which is hereby corrected was originally published in the **Federal Register** on December 18, 2007 (72 FR 71576) and the approval for West Virginia titled ''Approval and Promulgation of Air Quality Implementation Plans; West Virginia; Clean Air Interstate Rule'' which is hereby corrected was originally published in the **Federal Register** on August 4, 2009 (74 FR 38536).

EPA is taking this final action without prior opportunity for notice and comment because EPA finds, for good cause, that notice and public procedure thereon are unnecessary and not in the public interest. Section 553(b)(B) of the Administrative Procedure Act provides that the notice and comment requirements in section 553 do not apply when the agency for good cause finds that notice and public procedure there on are impracticable, unnecessary, or contrary to the public interest. 5 U.S.C. 553(b)(B). Section 307(d)(1) of the CAA in turn provides that the requirements of section 307(d) do not apply in the case of a rule or circumstance referred to in section 553(b)(A) or section 553(b)(B) of the Administrative Procedure Act in Title 5. 42 U.S.C. 7607(1).

EPA finds that notice and public procedure are unnecessary because EPA has no discretion given the specific

circumstances presented in this case. EPA is bound by the decisions of the courts and must act in accordance with those decisions. EPA must accept the Court's conclusion that compliance with CAIR does not satisfy the requirements of CAA section 110(a)(2)(D)(i)(I) and lacks discretion to reach a different conclusion. This correction is a ministerial matter consistent with the decisions of the courts. For these reasons, it is unnecessary to provide an opportunity for notice and comment.

V. Analysis of Downwind Air Quality and Upwind State Emissions

A. Pollutants Regulated

To address interstate transport of air pollution, EPA must choose which pollutants to regulate relevant to significant contribution to nonattainment or interference with maintenance of the NAAQS of concern downwind. This section of the preamble discusses the pollutants regulated under the final Transport Rule.

1. Background

Based on scientific and technical information, as well as EPA's air quality modeling, EPA concluded for CAIR that the most effective approach to reducing the contribution of interstate transport to $PM_{2.5}$ was to control SO_2 and NO_X emissions. For CAIR, EPA did not limit emissions of other components of $PM_{2.5}$, noting that ''current information relating to sources and controls for other components identified in transported $PM_{2.5}$ (carbonaceous particles, ammonium, and crustal materials) does not, at this time, provide an adequate basis for regulating the regional transport of emissions responsible for these $PM_{2.5}$ components'' (69 FR 4582).

With respect to ozone transport, EPA has previously concluded that it is proper to control ozone-season NO_X emissions. For CAIR and the NO_X SIP Call programs, EPA based this conclusion on the assessment of ozone transport conducted by the Ozone Transport Assessment Group (OTAG) in the mid-1990s. The OTAG Regional and Urban Scale Modeling and Air Quality Analysis Work Groups concluded that regional NO_X emission reductions are effective in producing ozone benefits that grow with increasing regional NO_X abatement.

The relative importance of NO_X and VOC in ozone formation and control varies with local and time-specific factors, including the relative amounts of VOC and NO_X present. In rural areas and many urban areas with high concentrations of VOC from biogenic sources, ozone formation and control is governed by NO_X. In some urban core situations, NO_X concentrations can be high enough relative to VOC to suppress ozone formation locally, but still contribute to increased ozone downwind from the city. In such situations, VOC reductions are most effective at reducing ozone within the urban environment and immediately downwind. The formation of ozone increases with temperature and sunlight, which is one reason ozone levels are higher during the summer. Increased temperature also increases emissions of volatile man-made and biogenic organics and can indirectly increase NO_X as well (*e.g.,* increased electricity generation for air conditioning). Summertime conditions also bring increased episodes of large scale stagnation of air masses, which promote the build-up of direct emissions and pollutants formed through atmospheric reactions over large regions. Authoritative assessments of ozone control approaches have concluded that, for reducing regional scale ozone transport, a NO_X control strategy is most effective, whereas VOC reductions are generally most effective locally, in more dense urbanized areas.

Studies conducted since the 1970s established that ozone occurs on a regional scale (*i.e.,* thousands of kilometers) over much of the eastern U.S., with elevated concentrations occurring in rural as well as metropolitan areas. While substantial progress has been made in reducing ozone in many urban areas, regional-scale ozone transport is still an important component of high ozone concentrations during the extended summer ozone season. A series of more recent progress reports discussing the effect of the NO_X SIP Call reductions can be found on EPA's Web site at: *http://www.epa.gov/airmarkets/progress/progress-reports.html.*

More recent assessments of ozone (including those conducted for the Regulatory Impact Analysis for the ozone standards in 2008) continue to show the importance of NO_X transport as a factor in ozone formation. For addressing interstate ozone transport in CAIR, EPA required NO_X emission reductions but did not include requirements for VOCs. EPA believes that VOCs from some upwind states do indeed have an impact in some nearby downwind states, particularly over short transport distances. EPA expects that states, typically in local nonattainment planning, would benefit from examining the extent to which VOC emissions affect ozone pollution levels within and near urban nonattainment areas, and states may identify areas where multi-state VOC strategies might assist in attainment planning for meeting the 8-hour standard. However, EPA continues to believe that the most effective regional pollution control strategy for mitigation of interstate transport of ozone remains NO_X emission reductions.

2. Which pollutants did EPA propose to control for purposes of $PM_{2.5}$ and ozone transport?

For the proposed rule, EPA concluded that its findings in CAIR regarding the nature of pollutant contributions are still appropriate. EPA proposed to require SO_2 and annual NO_X emission reductions to control $PM_{2.5}$ transport and to require ozone-season NO_X emission reductions to control ozone transport. In the proposal, EPA discussed and requested comment on the inclusion of southern states in the annual NO_X program for $PM_{2.5}$ control.

3. Comments and Responses

EPA received no adverse comments on its proposal to regulate SO_2 for addressing $PM_{2.5}$ transport, the proposal not to regulate direct $PM_{2.5}$ or organic $PM_{2.5}$ precursors, and the proposal to focus ozone-season efforts on NO_X and not to regulate VOCs.

One commenter questioned EPA's regulation of NO_X for purposes of addressing $PM_{2.5}$ transport in all states (including northern states with cooler climates and higher nitrate deposition). Several commenters, representing southern state air quality agencies and regulated sources in southern states, disagreed with EPA's proposed regulation of annual NO_X emissions for all regulated states. These commenters, while not disagreeing with the need for regulation of SO_2, observed that in EPA's modeling analysis, contributions from certain southern states' NO_X emissions to $PM_{2.5}$ in downwind states were relatively small.

Accordingly, these commenters argued that either (1) EPA should remove NO_X as a precursor analyzed for $PM_{2.5}$ contribution from those states, or (2) the required remedy for emission reductions in those states should not require reductions in annual NO_X.

For the final rule, EPA retains the approach for regulated pollutants in the proposal, which regulates annual NO_X and SO_2 for states affecting downwind state $PM_{2.5}$ nonattainment and maintenance sites, and ozone-season NO_X for states impacting downwind state ozone nonattainment and maintenance. EPA considered commenters' requests to remove some states from the annual NO_X program. However, EPA believes that it is

appropriate to establish a cap on these states' annual NO_X emissions, in part to ensure the continued annual operation of existing control equipment that would prevent substantial increases in NO_X emissions. EPA believes that without these reductions, increased ''nitrate replacement'' could occur, a known atmospheric phenomenon whereby some of the sulfate reductions due to SO_2 emission reductions are eroded by increases in nitrate concentrations due solely to those SO_2 reductions.[16] This is an especially pertinent concern for southern states which have significant impacts on northern receptors in colder climates where nitrate concentrations are generally higher. For example, Alabama and Tennessee are both linked to Washtenaw County, MI for 24-hour $PM_{2.5}$; North Carolina is linked to Lancaster County, PA for 24-hour $PM_{2.5}$; and Texas is linked to Madison County, IL for both annual and 24-hour $PM_{2.5}$. All of these downwind areas have appreciable nitrate deposition contributing to nonattainment and maintenance concerns for the $PM_{2.5}$ NAAQS. If the states linked to those receptors were to make SO_2 reductions only, their beneficial impact on downwind air quality would be partially eroded by nitrate replacement. EPA therefore believes that it is reasonable to seek both SO_2 and NO_X reductions from states included in the Transport Rule program that are found to significantly contribute to nonattainment or interfere with maintenance of the $PM_{2.5}$ NAAQS in downwind states.

In addition, EPA notes that there would be important disbenefits to effectively removing CAIR's existing annual NO_X requirements in those states. If EPA were to allow annual NO_X emissions to increase for those states, there would be potentially harmful effects on visibility, nitrogen deposition, and other aspects of human and environmental health.

B. Baseline for Pollution Transport Analysis

Implementing the mandate of CAA section 110(a)(2)(D)(i)(I) requires EPA to determine which states significantly contribute to nonattainment and interfere with maintenance of the NAAQS in other states, as well as to quantify the emissions in each state that must be eliminated. This process begins with an analysis of baseline emissions. Baseline emissions are the emissions that would occur in each state if EPA did not promulgate the Transport Rule. To conduct such analysis, EPA generally takes into account emission limitations that are currently, and will continue to be, in place. From that baseline, EPA analyzes whether additional reductions are necessary beyond those already mandated by existing emission limitation requirements. For example, the base case used in CAIR reflected the reductions already required by the NO_X SIP Call, which remained in effect even after the CAIR emission reduction requirements took effect.

The unique legal situation addressed by the Transport Rule necessarily affects the quantification of baseline emissions. Specifically, because the Transport Rule will replace CAIR, EPA cannot consider reductions associated with CAIR in the ''base case'' (*i.e.,* analytical baseline emissions scenario). If EPA were to consider all reductions associated with CAIR in the ''base case,'' the baseline emissions would not adequately reflect the true 2012 baseline in each state (*i.e.,* the emissions that would occur in each state in 2012 if the Transport Rule did not require any reductions in that state). Similarly, if EPA were to treat the capital investments that have already been made to meet the requirements of CAIR as new costs rather than treating them as ''sunk'' capital costs, EPA's analysis would not accurately reflect the cost of emission reductions required by the Transport Rule. As explained below, EPA's analysis both properly considered all capital investments made in response to CAIR and properly recognized that, after CAIR is terminated, the emission limitations imposed by CAIR will cease to exist.

In 2005 EPA promulgated CAIR, which required large electric generating units in 29 states to make phase I emission reductions in NO_X emissions starting in 2009, phase I emission reductions in SO_2 starting in 2010 and phase II reductions in emissions of both pollutants starting in 2015. On July 11, 2008, the DC Court of Appeals held that CAIR had ''more than several fatal flaws,'' *North Carolina,* 531 F.3d at 901, and remanded and vacated the rule, *id.* at 930. The Court subsequently granted EPA's petition for rehearing in part and remanded CAIR without vacatur ''for EPA to conduct further proceedings consistent with'' the Court's July 11, 2008 opinion. *North Carolina,* 550 F.3d 1176. The Court explained that it was ''allowing CAIR to remain in effect until it is replaced by a rule consistent with [the July 11, 2008] opinion'' because this ''would at least temporarily preserve the environmental values covered by CAIR.'' *Id.* at 1178. Moreover, the Court stated that it did not ''intend to grant an indefinite stay of the effectiveness of'' the July 11, 2008 order vacating CAIR. *Id.* In summary, the Court determined that CAIR was fatally flawed and could remain in effect only as a stopgap measure until EPA could act to replace it.

Thus, unlike most other regulatory requirements (such as the Acid Rain Program under CAA Title IV, the NO_X Budget Trading Program under the NO_X SIP Call, New Source Performance Standards, and state laws and consent orders requiring emission reductions), the emission limitations contained in CAIR are only temporary. Moreover, the duration of these limitations is directly tied to the Transport Rule. The Transport Rule replaces CAIR. Thus, CAIR itself will be terminated for the SO_2, annual NO_X, and ozone-season NO_X control periods starting in 2012 when the emission limitations established in the final Transport Rule for those control periods take effect (January 1, 2012 for the annual control periods and May 1, 2012 for the ozone-season control period). For this reason, emission reductions made to comply with CAIR cannot be treated as if they were emission reductions achieved to comply with statutory provisions, rules, consent decrees, and other enforceable requirements that establish permanent emission limitations. EPA takes reductions made to comply with permanent limitations into consideration when quantifying each state's baseline emissions for the purpose of analyzing whether its emissions significantly contribute to nonattainment or interfere with maintenance in another state. However, the unique legal status of CAIR and its replacement with the Transport Rule distinguish the emission reductions required by CAIR from those of other regulatory requirements. Since the limitations and emission reduction requirements in CAIR are temporary and will be terminated by the Transport Rule, they must be excluded from the Transport Rule's base case analysis.

Some comments on the Transport Rule proposal claim that EPA's treatment of CAIR is inconsistent with the treatment, in prior rulemakings, of the Acid Rain Program and the NO_X SIP Call. Such comments ignore the unique legal status of CAIR, and EPA therefore rejects these claims.

A simple example illustrates this point. Assume state Z's emissions before

[16] SO_2 reductions successfully decrease atmospheric formation of ammonium sulfate, but in doing so they ''free up'' the ammonia component that would otherwise have reacted with SO_2 and is now free to react with NO_X instead, causing a ''rebound effect'' partially eroding the improvement in $PM_{2.5}$ concentrations. This effect can be mitigated with tandem NO_X reductions.

CAIR were 2,000 tons and that state Z was required by CAIR to reduce its emissions to 1,000 tons. If EPA were to determine that state Z's baseline emissions were 1,000 tons and then conclude, based on that assumption, that no additional reductions in state Z are necessary because state Z does not significantly contribute to downwind nonattainment unless its emissions exceed 1,500 tons, then state Z would not be covered by the Transport Rule. However, the Transport Rule will terminate all CAIR requirements in all CAIR states regardless of whether they are covered by the Transport Rule. Thus, after promulgation of the Transport Rule, state Z would again be allowed, and would be projected in this example, to emit 2,000 tons. In other words, state Z would be allowed to significantly contribute to nonattainment and/or interfere with maintenance in other states—a result that would be inconsistent with the statutory mandate of CAA section 110(a)(2)(D)(i)(I). On the other hand, if EPA assumes state Z's baseline emissions are 2,000 tons as projected without CAIR in place, EPA can properly determine whether, if state Z were allowed to emit that amount (*i.e.,* the amount state Z would be projected to emit if excluded from the Transport Rule), the state would significantly contribute to nonattainment or interfere with maintenance in any other state. In other words, EPA can determine the stringency of emission limitations needed (if any) to replace those that were established by CAIR in order to ensure that state Z prohibits all emissions that significantly contribute to nonattainment or interfere with maintenance in other states.

In fact, commenters' suggestion that the Transport Rule base case should include CAIR would cause the anomalous result of excluding sources in a state from the Transport Rule because of their CAIR–required emission reductions while simultaneously eliminating those CAIR emission reduction requirements. If EPA's base case analysis were to assume erroneously that reductions from CAIR would continue indefinitely, a state currently covered by CAIR, but not covered by the Transport Rule, would have no CAIR requirements once the Transport Rule programs began and so could increase emissions beyond the CAIR limitations. Downwind areas that are in attainment (and are not experiencing interference with maintenance of such attainment) solely because of emission reductions required by CAIR could again face nonattainment or interference with maintenance problems because the current protection from upwind pollution from such an upwind state would not be replaced. In short, the analysis of whether a state should be included in a rule eliminating and replacing CAIR cannot logically assume that CAIR remains in place. For these reasons, EPA believes it is reasonable to use a base case that does not assume that the CAIR reduction requirements will continue to be achieved and so does not include CAIR-specific emission reductions.

As a result, EPA's 2012 base case shows emissions higher than current levels in some states. In the absence of the CAIR SO_2 and NO_X programs that EPA has been directed to eliminate and replace, utility emissions in CAIR states will be limited only by non-CAIR constraints including the Acid Rain Program, the NO_X SIP Call, New Source Performance Standards, any state laws and consent order requiring emission reductions, and any other permanent and enforceable binding reduction commitments. This will lead to increased emissions in some states in the 2012 base case relative to current emissions. For example, efforts to comply with the Acid Rain Program at the least cost may occur, in some cases, without the operation of existing scrubbers through use of readily available, inexpensive Title IV allowances.

It is important to note that, to the extent that emission reductions currently required by CAIR are also reflected in emission reduction requirements under the Acid Rain Program, the NO_X SIP Call, New Source Performance Standards, any state laws and consent orders requiring emission reductions, and any other enforceable binding reduction commitments, such reductions are accounted for in EPA's 2012 base case. Some commenter claimed that in excluding CAIR-specific emission reductions from the base case, EPA ignores non-CAIR legal requirements (*e.g.,* in Title V permits) that may prevent sources from increasing emissions above CAIR levels. Such allegations are incorrect. As discussed elsewhere in this preamble, EPA accounted for any Title V permits, consent decrees, state rules, and other enforceable limitations on sources' emissions; if these non-CAIR limitations effectively restrain a state's emissions to not exceed the state's CAIR limitations, EPA's base case modeling would reflect this outcome. Commenters also assert that utilities are unlikely to dismantle or discontinue running the installed controls to the point of returning to pre-CAIR emission levels. EPA agrees that installed controls are not likely to be physically dismantled, and as discussed elsewhere in this preamble, EPA's analysis properly treats the capital investments made in emission controls attributed to CAIR as ''sunk'' capital costs (*i.e.,* capital costs already obligated in the past) that are not included as costs of meeting Transport Rule requirements.

Our cost analysis for significant contribution reflects on-the-ground realities. Investments in pollution control equipment were made in response to CAIR requirements. Those expenditures are ''sunk'' capital costs, meaning that those investments were committed in the past, prior to the Transport Rule. Adding the capital costs of that equipment into the costs of Transport Rule emission reduction options would be incorrect; those capital investments are represented in place in the base case.

However, given ongoing costs associated with operating these controls, EPA believes sources would have an economic incentive to discontinue operating installed controls, or to operate those controls less effectively, except to the extent non-CAIR legal requirements mandate emission reductions or to the extent that sources would find it economic to operate the controls for non-CAIR market-based emission control programs. EPA properly treats the costs of operating controls installed to meet CAIR requirements as costs of meeting Transport Rule requirements.[17] EPA's base case accounts for non-CAIR requirements and does not make the unreasonable assumption that installed controls would be operated to achieve emission reductions that are not necessary to meet non-CAIR requirements. For all of these reasons, EPA rejects commenters' claims that the base case is ''unrepresentative'' or lacks ''a rational relationship to the real world.''

C. Air Quality Modeling To Identify Downwind Nonattainment and Maintenance Receptors

1. Emission Inventories

To inform air quality modeling for the development of the final Transport Rule, EPA developed emission

[17] For more details on how EPA models economic operation of existing pollution control equipment in the Transport Rule base case, please see Section 6 (''Dispatchable Controls'') in ''Updates to EPA Base Case v3.02 EISA Using the Integrated Planning Model'' Technical Support Document (TSD) for the Transport Rule Docket ID No. EPA–HQ–OAR–2009–0491, U.S. EPA, July 2010 (available at *http://www.epa.gov/airmarkets/progsregs/epa-ipm/IPM Update Documentation.pdf*).

inventories for a 2005 base year and for 2012 and 2014 projections. The inventories for all years include emission estimates for EGUs, non-EGU point sources, stationary nonpoint sources, onroad mobile sources, nonroad mobile sources, and biogenic (non-human) sources. EPA's air quality modeling relies on this comprehensive set of emission inventories because emissions from multiple source categories are needed to model ambient air quality and to facilitate comparison of model outputs with ambient measurements. In addition, EPA considers all relevant emissions (regardless of source category) when determining whether a state is found to be significantly contributing to or interfering with maintenance of a particular NAAQS in another state.

The emission inventories were processed through the Sparse Matrix Operator Kernel Emissions (SMOKE) Modeling System version 2.6 to produce the gridded, hourly, speciated, model-ready emissions for input to the CAMx air quality model. Additional information on the development of the emission inventories and related data sets for emissions modeling are provided in the Emission Inventory Final Transport Rule TSD.

On October 27, 2010, EPA issued a NODA on ''Revisions to Emission Inventories.'' The NODA's primary purpose was to notify the public about changes to emission inventories made since the proposal modeling. The affected emission sectors were non-EGU stationary point sources, nonpoint sources, and Category 3 commercial marine vessel sources. The NODA also presented a newly released model for developing onroad mobile source emissions for use in air quality modeling for the final Transport Rule.

The major comments received in response to the emission inventories and modeling included in the proposed Transport Rule and the October 27 NODA are summarized in the following subsections. EPA agreed with the comments summarized below and adopted technical corrections or updates to the emission inventories and modeling accordingly. For EPA to be able to take appropriate action, comments on the emission inventories needed to be specific enough to allow for credible alternative data sources to be located. EPA adopted corrections from comments on in-place control programs or devices where the controls were enforceable and quantifiable.

a. Foundation Emission Inventory Data Sets

EPA developed emission data representing the year 2005 to support air quality modeling of a base year from which future air quality could be forecasted. EPA used the 2005 National Emission Inventory (NEI), version 2 from October 6, 2008, as the chief basis for the U.S. inventories supporting the 2005 air quality modeling. This inventory includes 2005-specific data for point and mobile sources, while most nonpoint data were carried forward from version 3 of the 2002 NEI. The future base case scenarios modeled for 2012 and 2014 represent predicted emission reductions primarily from already promulgated federal measures.

EPA used a 2006 Canadian inventory and a 1999 Mexican inventory for the portions of Canada and Mexico within the air quality modeling domains for all modeled scenarios. Emissions from Canada and Mexico for all source sectors (including EGUs) in these countries were held constant for all base- and future-year cases. EPA made this assumption because it does not currently have sufficient data to support projections of future-year emissions from Canada and Mexico.

b. Development of Emission Inventories for EGUs

The annual NO_X and SO_2 emissions for EGUs in the 2005 NEI v2 are based primarily on data from continuous emissions monitoring systems (CEMS), with other EGU pollutants estimated using emission factors and annual heat input data reported to EPA. Although only NO_X and SO_2 are considered for control in this rule, emissions for all criteria air pollutants are necessary to model air quality. For EGUs without CEMS, EPA used data submitted to the NEI by the states. For more information on the details of how the 2005 EGU emissions were developed, see the Emissions Inventory Final Rule TSD.

Commenters stated that some point sources that were classified as non-EGUs in the proposal modeling were actually EGUs, resulting in double counting of emissions in future-year modeling. EPA reviewed its assignment of EGUs and non-EGUs and reclassified EGU sources found to be in the non-EGU inventory for the updated 2005 EGU inventory to prevent double counting of future-year emissions.

The future base case scenarios for EGUs reflect projected changes to fuel usage and economics, as described in the Emission Inventory Final Rule TSD. Future year base case EGU emissions that predict SO_2, NO_X, and $PM_{2.5}$ were obtained from version 4.10_FTransport of the Integrated Planning Model (IPM) outputs (*http://www.epa.gov/airmarkt/progsregs/epa-ipm/index.html*). The IPM is a multi-regional, dynamic, deterministic linear programming model of the U.S. electric power sector; version 4.10_FTransport reflects state rules and consent decrees through December 1, 2010, and incorporates public comments on existing controls submitted to EPA through both the Transport Rule-related notice and comment process as well as the proposed Mercury and Air Toxics Standards Information Collection Request (ICR). The operation of existing SO_2 or NO_X advanced controls (*e.g.,* scrubber, SCR) on units that were not required to operate those controls for compliance with Title IV, New Source Review (NSR), state settlements, or state-specific rules was projected by IPM on the basis of providing least cost operation of the power generation system subject to existing regulatory requirements except CAIR (see baseline discussion in section V.B).

Additionally, IPM v.4.10_FTransport incorporates comments received during the rulemaking process. Fuel-related updates include comment-driven unit-specific limitations on 2012 coal rank selection, limiting unrestricted switching from bituminous to subbituminous coal by imposing boiler modification costs for those units shifting from bituminous to subbituminous coal without historical precedent, and a correction of waste coal prices. Pollution control-related updates include keying the performance assumptions for FGD and SCR more closely to historic performance data, and the inclusion of dry sorbent injection (DSI), a SO_2 removal technology. Other notable updates include revised assumptions on the heat rate and consequent dispatching of cogenerating units and incorporation of additional planned retirements. Further details on these updates are available in the IPM Documentation, available in the docket and at: *http://www.epa.gov/airmarkets/progsregs/epa-ipm/index.html.*

c. Development of Emission Inventories for Non-EGU Point Sources

Details on the development of emission inventories are available in the Emission Inventory Final Rule TSD. In both the proposal and final modeling, controls on industrial boilers installed under the NO_X SIP call were assumed to have been implemented by 2005 and captured in the 2005 NEI v2. The non-EGU point source emissions were updated from the 2005 NEI and the

emissions used for the proposal modeling through the incorporation of comments on the proposal emissions values, previously unknown facility closures, and through other data improvements as identified by EPA analyses.

EPA does not factor in economic growth to develop non-EGU point source emission projections because analysis of historical emission trends and economic data did not support using economic growth to project non-EGU emissions. More details on the rationale for not applying economic growth to non-EGU industrial sources can be found in Appendix D of the Regulatory Impact Assessment (RIA) for the PM NAAQS rule (*http://www.epa.gov/ttn/ecas/regdata/RIAs/Appendix%20D—Inventory.pdf*). Although projections based on economic growth were not included, EPA did include reductions resulting from plant and unit closures, local and federal consent decrees, and several Maximum Achievable Control Technology (MACT) standards.

For non-EGU point sources, local control programs that may be necessary for areas to attain the annual $PM_{2.5}$ NAAQS and the ozone NAAQS are only included in the future base case projections when specific information about existing enforceable local controls was provided.

Since aircraft at airports were treated as point emissions sources in the 2005 NEI v2, we applied projection factors based on activity growth projected by the Federal Aviation Administration Terminal Area Forecast (TAF) system, published in December 2008.

A number of comments were received on the stationary non-EGU point source inventories. Below is a summary of the major comments that impacted the stationary non-EGU point source inventories for the final modeling:

Comment: Commenters stated that EPA did not properly represent some point source emissions in base-year and future-year inventories due to facility and unit closures, consent decrees, emission caps, control programs, and alternative emission estimates.

Response: EPA reviewed the sources referenced in the individual comments regarding the base-year and future-year inventories. In cases where credible alternative data were available, EPA revised the emission inventories to incorporate additional facility and unit closures, consent decrees, emission caps, control programs, enforceable local controls, and alternative emission estimates.

Comment: Commenters stated that EPA should include controls from the National Emission Standards for Hazardous Air Pollutants for Reciprocating Internal Combustion Engines (RICE NESHAP) in our modeling.

Response: EPA included reductions expected to be achieved by the RICE NESHAP across the United States in our final modeling of stationary non-EGU and nonpoint sources.

Comment: Commenters stated that EPA was not properly representing existing or planned controls for cement plants.

Response: EPA updated control and projection information for cement plants based on the latest available data and cement sector-specific modeling results.

Comment: EPA specifically requested comments on whether to incorporate emission reduction estimates from the NESHAP for Major Sources: Industrial, Commercial, and Institutional Boilers and Process Heaters (75 FR 32006). Commenters stated that emission reduction estimates should not be included until the rule became final.

Response: EPA did not incorporate emission reduction estimates from the NESHAP for Major Sources: Industrial, Commercial, and Institutional Boilers and Process Heaters (75 FR 32006) into the proposal or final modeling because the rule was not final at the time the modeling was performed. Note that reductions from this rule would not have impacted the 2012 base case due to its implementation schedule, and only the 2014 emissions would have been affected.

d. Development of Emission Inventories for Onroad Mobile Sources

The onroad emissions in the proposal modeling were primarily based on the National Mobile Inventory Model (NMIM) monthly, county, and process level emissions along with gasoline exhaust emissions from a fall 2008 draft version of the Motor Vehicle Emission Simulator (MOVES). A major comment on the proposal modeling for onroad mobile sources was the following:

Comment: Commenters stated that EPA should use a publicly released version of MOVES for its final modeling.

Response: EPA updated the final modeling to use data from the publicly released version of the MOVES 2010 model because the model became available in time for inclusion of its results in the final modeling. It was not used for the proposal modeling because it was not available at the time the modeling was performed.

In the final Transport Rule modeling, EPA used MOVES 2010 state-month level emissions for all criteria pollutants and all modes (evaporative, exhaust, brake wear and tire wear) and allocated those emissions to counties according to state-county NMIM emissions ratios. For California (the emissions for which are included to support the coarse modeling domain), the onroad mobile emissions data were derived from data provided by the state. These data were augmented with MOVES 2010 outputs for NH_3 because data for that pollutant had not been provided. Additional information on the approach to onroad mobile source emissions is available in the Emission Inventory Final Rule TSD.

In the future-year base modeling for mobile sources, all national measures available at the time of modeling were included. The future scenarios for mobile sources reflect projected changes to fuel usage, as described in the Emission Inventory Final Rule TSD. Emissions for these years reflect onroad mobile control programs including the Light-Duty Vehicle Tier 2 Rule, the Onroad Heavy-Duty Rule, the Light-Duty Vehicle Greenhouse Gas Rule, the Renewable Fuel Standards Rule, and the Mobile Source Air Toxics (MSAT) final rule.

e. Development of Commercial Marine Category 3 Vessel Emission Inventories

For the 2005 modeling, the commercial marine category 3 (C3) vessel emissions, a portion of nonroad mobile emissions, were augmented with gridded 2005 emissions from the previous modeling efforts for the rule called ''Control of Emissions from New Marine Compression-Ignition Engines at or Above 30 Liters per Cylinder.'' Emissions out to 200 nautical miles from the coastline were allocated to states in the proposal modeling. A major comment on the proposal modeling was the following:

Comment: Commenters stated that emissions from commercial marine sources (a component of the nonroad emissions in the summaries that were provided for the NPR) were too high.

Response: EPA reviewed the approach used for commercial marine C_3 emissions in the proposal. In the final modeling, instead of using the boundary of 200 nautical miles from the coast as was used in the proposal, EPA adopted the Mineral Management Service state-federal water boundaries that assign state waters 3–10 nautical miles from the coast. This approach is consistent with the approach used in the 2005 and 2008 National Emission Inventories. In addition, the category 3 commercial marine emissions were adjusted to reflect a coordination between the Emissions Control Area proposal to the International Maritime Organization

(EPA–420–F–10–041, August 2010) control strategy; reductions of NO_X, VOC, and CO emissions for new C_3 engines starting in 2011; and fuel sulfur limits that go into effect as early as 2010.

f. Development of Emission Inventories for Other Nonroad Mobile Sources

The nonroad mobile source emissions for sources other than C_3 marine were primarily based on NMIM monthly, county, and process level emissions from the 2005 NEI v2. These emissions were unchanged from proposal modeling, except for PM emissions in California that were updated to correct for missing emissions in a few counties and source categories.

Nonroad mobile emissions were created for future years with NMIM using an approach consistent with that used for 2005. The nonroad emissions for 2012 and 2014 were calculated using NMIM future-year equipment population estimates and control programs. Nonroad mobile emission reductions for 2012 and 2014 include reductions to locomotives, various nonroad engines including diesel engines and various marine engine types, fuel sulfur content, and evaporative emissions standards. A more comprehensive list of control programs included for mobile sources is available in the Emission Inventory Final Rule TSD.

The 2012 and 2014 nonroad mobile emissions for locomotives and category 1 and 2 (C1 and C2) commercial marine vessels were based on emissions published in EPA's Locomotive Marine Rule, Regulatory Impact Assessment, Chapter 3.

g. Development of Nonpoint Emission Inventories

For the proposal Transport Rule modeling, EPA augmented the 2002 NEI nonpoint emission inventory with a non-California Western Regional Air Partnership (WRAP) oil and gas exploration inventory, which includes emissions in several states within the eastern U.S. 12 km modeling domain and additional states within the national 36 km modeling domain. For the final Transport Rule modeling, EPA updated the nonpoint emission estimates for oil and gas sources. EPA continued to use the same WRAP inventory from the proposal, emissions in Texas and Oklahoma were updated but for the final modeling with data from the Texas Commission on Environmental Quality (TCEQ) and the Oklahoma Department of Environmental Quality (DEQ), respectively.

The average-year county-based inventories for wildfire and prescribed burning emissions were unchanged between the proposal and final modeling.

For stationary nonpoint sources, local control programs that may be necessary for areas to attain the annual $PM_{2.5}$ NAAQS and the ozone NAAQS are not included in the future base case projections unless specific information about existing enforceable controls was available (*e.g.,* ozone SIP controls from Ozone Transport Commission rules that impact source categories such as Consumer Products, Solvent Cleaning, Adhesives and Sealants). EPA specifically requested comment on local control data as part of the proposal and the October 27 NODA, and incorporated any usable data that was provided into the final inventories.

For stationary nonpoint sources, refueling emissions were projected using the refueling results from the NMIM runs performed for the onroad mobile sector.

Portable fuel container emissions were projected to future years using estimates from previous OTAQ rulemaking inventories. Emissions of ammonia and dust from animal operations were projected based on animal population data from the Department of Agriculture and EPA. Residential wood combustion was projected by replacement of obsolete wood stoves with new wood stoves and a 1 percent annual increase in fireplaces. Landfill emissions were projected using MACT controls. All other nonpoint sources were held constant between 2005 and the future years.

Some specific adjustments to the inventories were made in the final modeling to address comments that were received as described below. Area source MACT programs and controls from the RICE NESHAP were included in the final modeling to address submitted comments, as were fuel sulfur controls that were enforceable and that take effect by 2014.

The major comments that impacted the nonpoint sectors are as follows:

Comment: Commenters stated that the SO_2 emissions from industrial fuel combustion in Nebraska EPA are too high.

Response: EPA reviewed the NEI 2002-based data that had been used for the proposal modeling and determined that emissions from the 2005 inventory compiled for the Central Regional Air Planning Association (CENRAP) were more up to date for this source category and based on more localized data sources. The 2005 CENRAP emissions for industrial fuel combustion were used in the final modeling.

Comment: Commenters stated that EPA should include sulfur rule controls that take effect prior to the future years that were modeled.

Response: EPA included quantifiable sulfur rule controls in 2014 modeling for those states that had implemented the rules (New Jersey and Maine).

Comment: A commenter stated that emissions for Delaware were overestimated for several nonpoint categories in base-year and future-year inventories and provided alternative estimates for these categories.

Response: EPA reviewed the alternative estimates provided and found them to be credible and based on more detailed local scale information than were available in the national inventories. EPA incorporated the alternative emission estimates for Delaware into the final modeling.

Comment: A commenter stated that residual oil is not used as an industrial fuel in South Carolina.

Response: EPA analyzed the emissions from residual oil industrial fuel combustion in South Carolina and all other states, and analyzed preliminary regional planning office inventories and the 2008 NEI submittals. The South Carolina residual oil industrial fuel emissions were determined to be anomalously large in comparison to the near zero emissions in other submittals and were therefore removed from the nonpoint inventory.

2. Air Quality Basis for Identifying Receptors

a. Introduction

In this section, we describe the final approach to identify downwind nonattainment and maintenance receptors. We briefly summarize the modeling platform, the proposed approach to identify receptors, comments received, and the results of the final analysis.

In the Transport Rule, EPA has explicitly given independent meaning to the ''interfere with maintenance'' prong of section 110(a)(2)(D)(i)(I) by evaluating contributions to identified maintenance receptors as well as contributions to identified nonattainment receptors. EPA identified maintenance receptors as those receptors that would have difficulty maintaining the relevant NAAQS in a scenario that takes into account historic variability in air quality at that receptor. Specifically, EPA projects future air quality design values based on measured data during the period 2003 to 2007. In determining the downwind receptors of concern, EPA

does not solely rely on the projection of an average design value based on measured data from the relevant period (in this case 2003 to 2007) to make a determination of ''attainment'' or ''nonattainment.'' Instead, EPA also evaluates the maximum future design value at that receptor based on measured data over the relevant period. Receptors for which this latter analysis projects design values higher than the NAAQS are identified as maintenance receptors.

EPA believes it is appropriate and reasonable to use this approach to identify receptors that may have maintenance problems in the future. This approach uses measured data in order to establish potential air quality outcomes at each receptor that take into account the variable meteorological conditions present across the entire period of measured data (2003 to 2007). EPA interprets the maximum future design value to be a potential future air quality outcome consistent with the meteorology that yielded maximum measured concentrations in the ambient data set analyzed for that receptor. In other words, the average design value gives a reasonable projection of future air quality at the receptor under ''average'' conditions. However, EPA also recognizes that previously experienced meteorological conditions (*e.g.,* dominant wind direction, temperatures, air mass patterns) promoting ozone or fine particle formation that led to maximum concentrations in the measured data may reoccur in the future. The maximum design value gives a reasonable projection of future air quality at the receptor under a scenario in which such conditions do, in fact, reoccur. It also identifies upwind emissions that under those circumstances could interfere with the downwind area's ability to maintain the NAAQS.

Per the court's opinion in *North Carolina,* it is necessary for the Agency to evaluate ''interference with maintenance'' separately from ''significant contribution to nonattainment'' in order to give independent meaning to that phrase in the statute. The approach described above does so and provides a reasonable basis for identifying upwind emissions that interfere with maintenance of the NAAQS at downwind receptors.

Because the methodology is based on actual variations in design values measured at the receptors, EPA believes that the application of this design value methodology for identifying maintenance receptors reasonably anticipates possible future air quality outcomes based on meteorological conditions independent of emission reduction requirements occurring between 2005 (the base year for air quality analysis) and 2012 (the future year for air quality analysis of the base case without CAIR or the Transport Rule in place). EPA uses air quality modeling to properly account for changes in air quality from 2005 to 2012 due to emission control requirements and trends in emission source fleet turnover (such as increasingly cleaner motor vehicle fleets). The air quality modeling process allows EPA to effectively adjust measured data to project design values in 2012 based on the forecast changes in emissions. For a given receptor, the forecast change in emissions from 2005 to 2012 is a constant factor applied across all of the design values from the period 2003 to 2007. Thus, a comparison of the projected (future-year) design values themselves is equivalent to comparing the base period design values from the data set to consider how pollution concentrations are affected by non-modeled factors such as environmental and meteorological variability independent of the forecast emission reductions that stem from successful imposition of emission limitations and controls on various sources between the base and future modeling years. EPA believes it is reasonable to anticipate that these year-to-year meteorological fluctuations may reoccur at any time in the future and are relevant to determining receptors that are at risk of having a problem in the future with maintenance of the NAAQS. Therefore, EPA assesses the relationship of the maximum projected design value for 2012 at each receptor to the relevant NAAQS, and where such a value exceeds the NAAQS, EPA determines that receptor to be a ''maintenance'' receptor for purposes of defining interference with maintenance under the Transport Rule.

To provide an illustrative example, consider a hypothetical receptor ''Y'' whose measured data for 2003–2007 yields three design values for annual fine particles: 17 for 2003–05; 14 for 2004–06; and 12 μg/m^3 for 2005–07. Thus, the maximum measured design value for this period is 17 and the average design value is 14.3. To determine whether the receptor is a nonattainment or maintenance receptor, EPA projects a corresponding future-year (2012) design value for each measured design value. These projections are based on the results of air quality modeling, which demonstrates predicted changes in pollution concentrations for each receptor from 2005 to 2012. For this example, assume that the projected future-year design values that correspond with the measured design values, are 16 (corresponds with the 2003–05 design value of 17), 13 (corresponds with the 2004–06 design value of 14), and 11 μg/m^3 (corresponds with the 2005–07 design value of 12). The average future-year design value is 13.3 (corresponds with the average measured design value from 2003–2007 of 14.3). The projected future design values are all lower than the measured design values because air quality is projected to improve between 2005 and 2012. In this example, the analysis establishes that the average projected future design value is 13.3 and the maximum projected future design value is 16.

The average future (2012) projected design value of 13.3 based on the average design value for the period 2003–07 does not exceed the 1997 annual $PM_{2.5}$ NAAQS. For this reason, EPA would conclude that receptor Y will most likely have attainment air quality in the future year. Therefore, it would not be identified as a nonattainment receptor.

However, the future projected design value of 16 based on the maximum design value for the period 2003–07 does exceed the NAAQS. For this reason, EPA would conclude that the receptor may have difficulty maintaining attainment with the NAAQS under future potential meteorological conditions. EPA therefore would identify the receptor as a maintenance receptor and evaluate whether upwind state emissions interfere with maintenance of the NAAQS at that receptor.

EPA's methodology accounts for the range of meteorological conditions reflected by design values from the measured 2003–2007 data at receptor Y and also accounts for the projected changes in emissions from 2005 to 2012 at receptor Y. The range of meteorological conditions is accounted for by using data from three different 3-year periods as described above. The projected changes in emissions are accounted for by applying to the measured design values the forecasted change in $PM_{2.5}$ concentrations, as determined through air quality modeling of the 2005 and 2012 emissions. In this example, the maximum measured design value for receptor Y is 17. This design value represents measured data from 2003 to 2005. EPA applies to this design value the modeled 2005–to–2012 change in concentrations at receptor Y to obtain a 2012 maximum design value for that

receptor, which is 16. In this way, this maximum 2012 design value takes into consideration the air quality impacts of all known and legally applicable emission limitations taking effect after the 2003 to 2005 base period. Therefore, each of the projected future-year design values provide a fair representation of future air quality at receptor Y under different conditions while accounting for the emissions projected to remain in 2012. EPA thus believes that if one of these future-year design values for a particular receptor exceeds the NAAQS, it is reasonable to conclude that the area may have difficulty maintaining that NAAQS. For this reason, EPA identifies such receptors as maintenance receptors. In this example, EPA would find that while receptor Y's average future-year design value would not exceed the NAAQS, its maximum future-year design value (16) would exceed the NAAQS, and it would thus be designated as a ''maintenance'' receptor for purposes of the Transport Rule analyses.

In the proposed rule we used air quality modeling to (1) Identify locations where we expected there to be nonattainment and/or maintenance problems for annual average $PM_{2.5}$, 24-hour $PM_{2.5}$, and/or 8-hour ozone in 2012, (2) quantify the impacts (*i.e.,* air quality contributions) of SO_2 and NO_X emissions from upwind states on downwind annual average and 24-hour $PM_{2.5}$ concentrations at monitoring sites projected to be nonattainment or have maintenance problems in 2012 for the 1997 annual and 2006 24-hour $PM_{2.5}$ NAAQS, respectively, and (3) quantify the impacts of NO_X emissions from upwind states on downwind 8-hour ozone concentrations at monitoring sites projected to be nonattainment or have maintenance problems in 2012 for the 1997 ozone NAAQS.

To support the proposal, air quality modeling was performed for four emission scenarios: a 2005 base year, a 2012 ''no CAIR'' base case, a 2014 ''no CAIR'' base case, and a 2014 control case that reflects the emission reductions expected from the FIPs. The modeling for 2005 was used as the base year for projecting air quality for each of the 3 future-year scenarios. The 2012 base case modeling was used to identify future nonattainment and maintenance locations and to quantify the contributions of emissions in upwind states to annual average and 24-hour $PM_{2.5}$ and 8-hour ozone. The 2012 ozone and $PM_{2.5}$ concentrations were derived by projecting 2003 through 2007 based ambient ozone and/or $PM_{2.5}$ data to the future using the relative (percent) change in modeled concentrations between 2005 and 2012. The 2014 base case and 2014 control case modeling were used to quantify the benefits of this proposal.

In the proposed rule, EPA used the Comprehensive Air Quality Model with Extensions (CAMx) version 5.20 [18] to simulate ozone and $PM_{2.5}$ concentrations for the 2005 base year and the 2012 and 2014 future year scenarios. The CAMx model applications were designed to cover states in the central and eastern U.S. using a horizontal resolution of 12 x 12 km.[19]

CAMx contains ''source apportionment'' tools that are designed to quantify the contribution of emissions from various sources and areas to ozone and $PM_{2.5}$ component species in other downwind locations. The source apportionment tools were used to quantify the downwind contributions of ozone and $PM_{2.5}$ from upwind states.

In the proposed rule, EPA used a 2005-based air quality modeling platform which included 2005 base year emissions and 2005 meteorology for modeling ozone and $PM_{2.5}$ with CAMx.

We received comments related to several aspects of the air quality modeling platform.

Comment: There was wide support from commenters for the use of CAMx as an appropriate, state-of-the science air quality tool for use in the Transport Rule. There were no comments that suggested that EPA should use an alternative model for quantifying interstate transport. Many commenters requested that EPA update the emission inventories used for the Transport Rule and then remodel the 2005 base year and future year emissions using the updated emissions and the most recent version of CAMx to reassess interstate transport for the final rule.

Response: For the final rule we have updated our modeling using the latest public release of CAMx (version 5.30) and associated preprocessors. We have also made numerous improvements to the emission inventories for the 2005 base year as well as the 2012 and 2014 future year base cases in response to public comments. The emissions changes are described in section V.C.1. The projection of future year nonattainment and maintenance sites and the quantification of ozone and $PM_{2.5}$ transport for the final rule are based on modeling with CAMx v5.30 using the updated emission inventories. The final rule air quality projections of 2012 nonattainment and maintenance are described below. The final rule interstate contributions are presented in section V.D.

Comment: The performance evaluation of the 2005 base year model predictions for the proposed rule was too cursory and did not provide sufficient detail on model performance. Commenters requested additional analyses and spatial resolution describing how well base year model predictions compare to the corresponding measured values.

Response: For the final rule we have expanded the scope of the model evaluation for 2005 to include a broader suite of statistics to characterize performance for individual subregions of the eastern U.S. modeling domain. The results of the performance evaluation for the final rule 2005 base year air quality modeling are described in the Air Quality Modeling Final Rule TSD.

Comment: The 2005 based modeling platform should be updated to a more recent year. There were several different aspects of this comment. Some commenters stated that EPA should be using a more recent emission inventory as a base year, due to identified changes and updates to the inventories. Other commenters stated that EPA should use a more recent base year, due to a trend of improvement in air quality over the past few years. The commenters claim that the 2005-based EPA modeling does not account for large emission reductions and air quality improvements that have occurred over the last several years.

Response: There are several reasons why the use of a 2005 modeling base case is both reasonable and, in fact, necessary for the Transport Rule. As explained in section V.B, above, because the Transport Rule will replace CAIR, EPA cannot consider reductions associated with CAIR in the analytical baseline emissions scenario. Thus, the base year for the air quality projections should be a year that represents emissions before CAIR was in place (*i.e.* 2005). We are projecting emissions to a future 2012 ''no CAIR'' case and therefore want to best represent the air quality change between 2005 and 2012, without CAIR. To do this, we projected emissions that existed before CAIR was in effect and modeled the air quality change that occurs between 2005 and 2012 without CAIR.

[18] Comprehensive Air Quality Model with Extensions Version 5 User's Guide. Environ International Corporation. Novato, CA. March 2009.

[19] The 12 km domain was nested within a coarse grid, 36 x 36 km modeling domain which covers the lower 48 states and adjacent portions of Canada and Mexico. Predictions from this Continental U.S. (CONUS) domain were used to provide initial and boundary concentrations for simulations in the 12 km domain.

A key consideration in our projection methodology is the use of ambient data to anchor the design value projections to the future. The modeling is used in a relative sense by multiplying the modeled percent change in ozone or $PM_{2.5}$ species concentrations by the base year ambient data. The ozone and $PM_{2.5}$ modeling guidance recommends projecting design values based on 5 years [20] of monitoring data that is centered on the base model year. Using 2005 as a base emissions and meteorological year entailed the use of 2003–2007 ambient air quality data (5 years of data centered about 2005). This was a reasonable choice because the majority of the ambient data from this period was not impacted by CAIR emission reductions.

After 2005, early emission reductions of SO_2 and NO_X in response to CAIR began to impact the measured air quality concentrations. Since the modeling projection methodology uses both modeled and observed data, 2005 is the latest base year that we deemed appropriate (before CAIR emission reductions took place) for use in projecting the measured air quality to a 2012 future year. The early years of the 5 year period (2003, 2004, and 2005) were not impacted by CAIR.[21] The last 2 years in the period (2006 and 2007) were slightly impacted by CAIR emission reductions. But the 5 year average is weighted towards the middle year of the period (2005), so the impact of the years after CAIR promulgation should be minimal.

The 2005 base year was also chosen because it was an appropriate meteorological year. In the eastern U.S. there was relatively high ozone during the summer of 2005 and relatively high $PM_{2.5}$ periods during the year. The modeled attainment tests for both ozone and 24-hour $PM_{2.5}$ depend on having a sufficient number of ''high'' modeled days to project to the future. Modeling a year that is not meteorologically conducive to ozone and/or $PM_{2.5}$ formation is discouraged by the modeling guidance because a meteorological year that is not conducive to ozone or $PM_{2.5}$ formation may be less responsive to changes in emissions in the future. Therefore, projecting the relative change in ozone or $PM_{2.5}$ for a non-conducive base year may underestimate the future change in ozone and/or $PM_{2.5}$ concentrations.

Additionally, all enforceable emission reductions that occurred between 2005 and 2012 (other than those required under CAIR) are captured by the modeling system. Any enforceable non-EGU emission reductions due to existing rules or the installation of emissions controls after 2005 were included in the 2012 base case inventory. As explained above in section V.B, to capture changes in EGU emissions between 2005 and 2012, EPA did not assume operation of all controls installed during that time period, as many of those controls were built in response to CAIR. EPA used IPM to project 2012 EGU emissions incorporating all non-CAIR enforceable emission constraints; operation of existing pollution controls was taken into account only where non-CAIR constraints made it economic or legally necessary to operate them. We also accounted for permanent source shutdowns that occurred after 2005. Where possible, we incorporated reported emission changes based on comments to the proposed rule and a subsequent emission inventory NODA.

Comment: Several commenters stated that we used a ''modeled + monitored'' test in CAIR to identify future year nonattainment receptors, but we only used a modeled test in the Transport Rule proposal. They suggest that we should either go back to the ''modeled + monitored'' test or explain why we should not use monitoring data in the identification of nonattainment and maintenance receptors. They say that we should not base nonattainment and maintenance receptors solely on modeled violations. They also say that we if we had looked at the most recent ambient data we would see that most of the modeled nonattainment and maintenance receptors are already attaining the ozone and/or $PM_{2.5}$ NAAQS.

Response: In the identification of future year nonattainment receptors for CAIR, EPA used what was called the ''modeled + monitored test''. The most recent ambient data (2001–2003 design values at the time) were examined to further verify that nonattainment was still being measured at potential future year nonattainment receptors. In the proposed Transport Rule, EPA identified future year nonattainment and maintenance receptors based on modeled projections of ambient data from the 2003–2007 time period. The future year receptors were not compared to most recent ambient data to verify that nonattainment still existed.

For the final Transport Rule, there are several reasons that EPA did not examine the most recent ambient data to verify that receptors were still measuring nonattainment. The main reason for dropping the ''monitored'' part of the modeled + monitored test is the fact that the most recent monitoring data (2007–2009 design values) include large emission reductions from CAIR. As explained in section V.B, above, because the Transport Rule will replace CAIR, we must model a future year base case which does not assume that CAIR is in place (a ''no-CAIR'' case). It is simply not appropriate to examine the current monitoring data, which represent air quality with CAIR emission reductions in place, and compare the values to 2012 projected air quality that is based on a no-CAIR modeling case. As discussed above, we modeled a 2005 base case with pre-CAIR emissions and a 2012 future ''no CAIR'' case. The change in modeled air quality is due to the non-CAIR enforceable emission changes between 2005 and 2012 and therefore explicitly does not take CAIR into account. As a consequence, the 2012 projected design values represent a unique case (necessary for analyzing future air quality without either CAIR or its replacement Transport Rule in effect) that cannot be represented by current ambient data.

It is also important to note that all of the projected 2012 design values are based on projections of measured ambient data. They are a combination of measured data and modeled response factors. Therefore, it is inaccurate to imply that future year nonattainment and maintenance receptors are solely based on modeled projections. The future year concentrations are firmly rooted in base year measured ambient data that have been projected to the future using modeled data.

There are additional reasons for not verifying the nonattainment and maintenance receptors against the most recent ambient data. In CAIR we did not explicitly identify maintenance receptors. In the Transport Rule proposal we identified maintenance receptors based on 2012 projections of maximum design values from the 2003–2007 period. Even though receptors may be measuring attainment based on recent data, they may still be at risk for falling back into nonattainment. Therefore, even if commenters argue that recent data show that monitoring sites should not be nonattainment receptors (with which we disagree), the same argument cannot be made regarding maintenance receptors. Clearly, receptors with recent ''clean'' ambient data may still experience higher $PM_{2.5}$ and/or ozone concentrations in the future (based on

[20] The modeling guidance recommends using a five year weighted average design value. This is calculated by averaging the three consecutive design value periods of 2003–2005, 2004–2006, and 2005–2007.

[21] The CAIR final rule was published on May 12, 2005.

meteorological and emission variability) and therefore may be appropriate maintenance receptors.

Comment: Several commenters claim that the maintenance receptor methodology overstates actual future design values. They also recommend an alternative methodology which takes into account the downward trend in observed $PM_{2.5}$ concentrations over the last 5+ years. The methodology would remove the trend in the data where air quality is improving over the period by applying a linear fit to the data, calculating the residuals and then adding the residuals back to the average of the data. Given a site with a downward trend, this has the effect of decreasing the calculated maximum values from the early years in the period and increasing the values from the end years in the period.

Response: EPA continues to believe that our approach to identify maintenance receptors is reasonable and appropriate. For the final rule, we continue to identify maintenance receptors by projecting the maximum design value from the 2003–2007 period to the future. The methodology assumes that the combination of emissions and meteorology that occurred in the base period (which led to relatively high ambient design values) could happen again in the future (albeit at lower emissions levels). There is no information presented by the commenters which explains why the magnitude of base year design value variability could not occur in the same way in the future. The commenters cite the downward trend in ambient data as the reason why the EPA methodology is not reasonable. However, in most cases, the recent downward trend in ambient data is due to a combination of ongoing emission reductions (which includes CAIR), variability in meteorology, and depressed emissions due to the recession. In fact, the most recent ambient design value period (2007–2009) is heavily influenced by extremely low ozone and $PM_{2.5}$ concentrations measured in 2009. The 2009 data are marked by relatively low emissions due to cool summer weather and ongoing effects of the recession. The preliminary [22] 2010 ambient data in the eastern U.S. show that ozone and $PM_{2.5}$ values were considerably higher in 2010 compared to 2009. In the states that are included in the final Transport Rule region, there were 158 ozone monitor days that exceeded 84 ppb in 2009 compared to 412 monitor exceedance days in 2010. For $PM_{2.5}$, there were 251 monitor days that exceeded 35 $\mu g/m^3$ in 2009 compared to 417 monitor exceedance days in 2010. Even though the SO_2 and NO_X emissions were generally lower in 2010, the observed ozone and $PM_{2.5}$ concentrations were higher. This shows the important influence of meteorology on ambient concentrations. Clearly, the year to year variability due to meteorology can be large. We acknowledge the downward trend in ambient data over the last few years. But this does not mean that conditions that led to high ozone and/or $PM_{2.5}$ in the 2003–2007 period could not occur again in the future. The 2010 ambient data show that meteorology can cause concentrations to go back up, even though there is a downward trend in emissions.

We also believe that the alternate maintenance methodology presented by the commenter is inappropriate. The EPA modeling for 2012 (and 2014) appropriately accounts for emission reductions that occur after 2005 except for those that should not be considered, as explained in section V.B., because they were required only by CAIR. Therefore, the starting point design values used to project to the future should not be lowered to account for emission reduction trends that occur after 2005. Doing so would give ''double credit'' to the more recent emission reductions and provides an inappropriate downward adjustment to the early design value periods of the 2003–2007 period.

Comment: One commenter claims that EPA did not follow our own modeling guidance by not doing local scale modeling in urban areas with high $PM_{2.5}$ concentration gradients. They suggested that the methodology to calculate future year design values should have included dispersion modeling to calculate the change in concentration over time of primary $PM_{2.5}$ emissions.

Response: EPA modeling guidance for $PM_{2.5}$ attainment demonstrations recommends photochemical grid modeling to examine future year changes in $PM_{2.5}$ concentrations. There are several optional aspects of the modeling which are recommended in specific cases. This includes a recommendation for a ''local area analysis'' using a dispersion model. An area with relatively large local primary $PM_{2.5}$ concentration gradients may want to do additional modeling to examine the impacts of local controls on its future year $PM_{2.5}$ concentrations. This is particularly important when local controls of primary $PM_{2.5}$ are included as part of the attainment demonstration.

As noted above, a ''local area analysis'' is recommended as part of the local attainment demonstration process in specific situations. It is impractical for EPA to perform this type of analysis for each local area in the regional Transport Rule. National rulemakings are not attainment demonstrations. We are not able to perform fine scale analyses for each area. For the final rule modeling, we have attempted to address all emissions and modeling related comments. We have updated the modeling platform to use the latest version of CAMx and are continuing to model ozone and $PM_{2.5}$ at 12km grid resolution, which for $PM_{2.5}$ is a more refined grid resolution compared to the CAIR modeling.

Additionally, there is no evidence presented by the commenter that would indicate that the future year $PM_{2.5}$ concentrations from the Transport Rule are biased high. In fact, depending on the circumstances, local fine scale grid or dispersion modeling may result in lower or higher future year design values. In a fine scale analysis, the dominant local primary $PM_{2.5}$ emissions become a larger percentage of the $PM_{2.5}$ concentrations. Therefore, if the local emissions are forecast to decrease, fine scale modeling may lead to lower future design values. However, if the local emissions are forecast to increase or stay the same between the base and future years, local modeling will likely show higher future year design values compared to a regional analysis. This points to the fact that perceived biases in modeling results may not always be correct.

In sum, fine scale modeling of local areas may lead to either higher or lower future year design values. There is no indication that EPA's regional modeling is biased in either direction. EPA's Transport Rule modeling generally followed EPA's modeling guidance and is appropriate for the purpose of this rulemaking.

Comment: One commenter completed and submitted a detailed CAMx based modeling analysis with a 2008 base year and future years of 2014 and 2018. The analysis shows that the majority of the proposed rule 2012 nonattainment and maintenance sites are already attaining based on either 2006–2008 or 2007–2009 ambient data. Based on this, the commenter claims that air quality has improved more rapidly than predicted by EPA's proposed rule modeling. Also, based on the commenter's 2014 modeling of CAIR emissions (including utility consent decrees and state programs), the commenter concludes that no additional controls are needed

[22] The 2010 data is preliminary. Exceptional event data has not been flagged and removed from the reported data.

beyond CAIR to bring most or all sites into attainment by 2014.

Response: As an initial matter, we note that the basic question addressed by the commenter, ''whether additional controls beyond CAIR are necessary,'' is not on point. As explained previously, the D.C. Circuit remanded CAIR to EPA and it remains in place only temporarily. The question EPA must answer in this rulemaking, therefore, is not what controls in addition to CAIR are necessary but what, if any, restrictions on emissions must be put in place to replace CAIR in order to satisfy the requirements of section 110(a)(2)(D)(i)(I) of the CAA. For this reason, and as explained in greater detail in section V.B of this preamble, any analysis of whether beyond CAIR controls are necessary is irrelevant to this rulemaking. Nonetheless, we have carefully reviewed different aspects of the commenter's analysis. We previously addressed comments related to the use of more recent ambient data to examine future year nonattainment and maintenance receptors. As noted above, the 2006–2008 and 2007–2009 ambient data is heavily influenced by several factors. Among them are the emissions reductions from CAIR, the relatively low recent observed ozone and $PM_{2.5}$ concentrations at least partially due to non-conducive meteorology (particularly in 2009), and the atypical suppression of emissions due to the sharp recession. For all of these reasons, we believe it is not possible to directly compare the most recent design values to the predicted future year 2012 and 2014 design values from the Transport Rule. In particular, it is inappropriate to compare current design values to EPA's no-CAIR 2012 future year modeling results. As noted in the comment summary, the commenter's modeling analysis assumed that CAIR was in place in both 2008 and the future years. This is a fundamentally different assumption than the modeling EPA used to define the Transport Rule nonattainment and maintenance receptors in 2012 and is inappropriate for purposes of the Transport Rule for reasons described above and in section V.B.

Additionally, EPA's maintenance methodology chooses the highest of three base year design value periods projected to the future. The commenter only used a single design value period in their analysis and therefore did not fully examine maintenance issues. In fact, the 2014 nonattainment modeling receptors in the final Transport Rule and the commenter's modeling analysis are similar. As documented in section VI.D, in the 2014 final rule remedy case, there is only one remaining nonattainment area for ozone and one remaining nonattainment area for 24-hour $PM_{2.5}$. This is similar to the modeling results presented in the comments.[23] However, EPA modeling identifies additional maintenance receptors in 2012 that continue to have maintenance issues in 2014.

EPA also examined our ozone and $PM_{2.5}$ projection procedures to see if there might be additional reasons for the relatively lower current ambient design values (and modeled design values in the commenter's analysis) compared to the 2014 remedy modeled values. Upon further analysis of EPA's 24-hour attainment test methodology, we noted certain discrepancies between the methodology and the calculation of the ambient 24-hour design values. In the proposed rule 24-hour attainment test, for each $PM_{2.5}$ monitor, we projected the measured 98th percentile concentrations from the 2003–2007 period to the future. A basic assumption in this methodology is that the distribution of high measured days in the base period will be the same in the future. For example, if the observed 98th percentile day is the 3rd high day for a particular year, we assume that the 1st, 2nd, and 3rd high days (and subsequent high days) in the future remain in the same basic distribution. Further examination of the proposed rule modeling found that this is not always the case. In situations where there are large summer $PM_{2.5}$ concentration reductions, some of the high days may switch from the summer in the base period to the winter in the future period.

In order to better account for the complicated future response in 24-hour design values, we have updated the 24-hour attainment demonstration methodology to more closely reflect the way 24-hour design values are calculated. In the revised methodology, we do not assume that the temporal distribution of high days in the base and future periods will remain the same. We project a larger set of ambient days from the base period to the future and then re-rank the entire set of days to find the new future 98th percentile value (for each year). More specifically, we project the highest 8 days per quarter (32 days per year) to the future and then re-rank the 32 days to derive the future year 98th percentile concentrations. In the case of the Transport Rule model results, this has the effect of lowering the future year 24-hour design values compared to the old methodology. The 2012 base case design values for all nonattainment and maintenance receptors were either unchanged or lower with the revised methodology.

3. How did EPA project future nonattainment and maintenance for annual $PM_{2.5}$, 24-hour $PM_{2.5}$, and 8-hour ozone?

Final Rule: In general, the methodology to project ozone and $PM_{2.5}$ concentrations to the future year(s) remains the same for the final rule. The proposal modeling followed the modeling guidance procedures for projecting ambient design values to future years. For the final rule, we continue to follow the basic procedures outlined in the guidance. The 8-hour ozone and annual $PM_{2.5}$ methodology are unchanged from the proposal. However, the 24-hour $PM_{2.5}$ methodology has been updated in the final rule to be more consistent with the calculation of 24-hour $PM_{2.5}$ design values. There were also additional minor updates to the ambient data.[24] The methodology to identify maintenance receptors is also unchanged from the proposal. We continue to use the maximum design value (projected from the 5 year base period) to calculate future year maintenance receptors.

As noted in the proposal, EPA considers that the maintenance concept has two components: Year-to-year variability in emissions and air quality, and continued maintenance of the air quality standard over time. The way that EPA defined maintenance based on year-to-year variability (as discussed in detail here) directly affects the requirements of this final rule. EPA also considered whether further reductions were necessary to ensure continued lack of interference with maintenance of the NAAQS over time (*e.g.,* after 2014). EPA concluded that in light of projected emission trends, and also considering the emission reductions from this proposed rule, no further reductions are required solely for this purpose at $PM_{2.5}$ and ozone receptors for which we are partially or fully determining significant contribution for the current NAAQS. (*See* discussion of emission trends in Chapter 7 of TSD entitled ''Emission Inventories,'' included in the docket for the Transport Rule proposal.)

[23] The purpose of this comparison is to note that the modeling analyses are actually more similar than the commenter implies. However, the Transport Rule differs from the commenter's modeling due to the assumption that CAIR was in place. CAIR and the Transport Rule differ in state coverage and emission budgets. They are therefore not directly comparable.

[24] The base year design values were updated based on the latest official data. *See http://www.epa.gov/airtrends/values.html.*

a. Which ambient ozone and $PM_{2.5}$ data did EPA use for the purpose of projecting future year concentrations?

The final rule modeling continues to use a 2005 base case inventory and 2005 meteorology. Therefore, we continue to use ambient data from the 2003–2007 period. For each monitoring site, all valid design values (up to 3) from this period were averaged together. Since 2005 is included in all three design value periods, this has the effect of creating a 5-year weighted average, where the middle year is weighted 3 times, the 2nd and 4th years are weighted twice, and the 1st and 5th years are weighted once. We refer to this as the 5-year weighted average value. The 5-year weighted average values were then projected to the future years that were analyzed for this final rule. The 2003–2005, 2004–2006, and 2005–2007 design values are accessible at *http://www.epa.gov/airtrends/values.html.* The design values have been updated based on the latest official values. The official values have exceptional events removed from the calculations if they are flagged by states and concurred with by EPA Regional offices.

The procedures for projecting annual average $PM_{2.5}$ and 8-hour ozone conform to the methodology in the current attainment demonstration modeling guidance.[25]

b. Projection of Future Annual and 24-Hour $PM_{2.5}$ Nonattainment and Maintenance

(1) Methodology for Projecting Future Annual $PM_{2.5}$ Nonattainment and Maintenance

For the final rule, annual $PM_{2.5}$ modeling was performed for the 2005 base year emissions and for the 2012 base case as part of the approach for projecting which locations are expected to be in nonattainment and/or have difficulty maintaining the $PM_{2.5}$ standards in 2012. We refer to these areas as nonattainment sites and maintenance sites respectively.

Concentrations of $PM_{2.5}$ in 2012 were estimated by applying the modeled 2005-to-2012 relative change in $PM_{2.5}$ species to each of the 3-year ambient monitoring data periods (*i.e.,* 2003–2005, 2004–2006, and 2005–2007) to obtain up to 3 future-year $PM_{2.5}$ design values for each monitoring site. We used the highest of these projections at each monitoring site to determine which sites are expected to have maintenance problems in 2012. We used the 5 year weighted average of those projections to determine which monitoring sites are expected to be nonattainment in this future year.

For the analysis of both nonattainment and maintenance, monitoring sites were included in the analysis if they had at least one complete design value in the 2003–2007 period.[26] There were 721 monitoring sites in the 12 km modeling domain which had at least one complete design value period for the annual $PM_{2.5}$ NAAQS, and 722 sites which met this criterion for the 24-hour NAAQS.[27]

EPA followed the procedures recommended in the modeling guidance for projecting $PM_{2.5}$ by projecting individual $PM_{2.5}$ component species and then summing these to calculate the concentration of total $PM_{2.5}$. EPA's Modeled Attainment Test Software (MATS) was used to calculate the future year design values. The software (including documentation) is available at: *http://www.epa.gov/scram001/modelingapps_mats.htm.* Additional details on the annual $PM_{2.5}$ nonattainment and maintenance projections methodology can be found in the Air Quality Modeling Final Rule TSD.

The 2012 annual $PM_{2.5}$ design values were calculated for each of the 721 sites. The calculated annual $PM_{2.5}$ design values are truncated after the second decimal place.[28] This is consistent with the ambient monitoring data truncation and rounding procedures for the annual $PM_{2.5}$ NAAQS. Any value that is greater than or equal to 15.05 μg/m³ is rounded to 15.1 μg/m³ and is considered to be violating the NAAQS. Thus, sites with projected 5-year weighted average (''average'') annual $PM_{2.5}$ design values of 15.05 μg/m³ or greater are predicted to be nonattainment sites. Sites with projected maximum design values of 15.05 μg/m³ or greater are predicted to be maintenance sites. Note that nonattainment sites are also maintenance sites because the maximum design value is always greater than or equal to the 5-year weighted average. For ease of reference we use the term ''nonattainment sites'' to refer to those sites that are projected to exceed the NAAQS based on both the average and maximum design values. Those sites that are projected to be attainment based on the average design value, but exceed the NAAQS based on the maximum design value, are referred to as maintenance sites. The monitoring sites that we project to be nonattainment and/or maintenance for the annual $PM_{2.5}$ NAAQS in the 2012 base case are the nonattainment/maintenance receptors used for assessing the contribution of emissions in upwind states to downwind nonattainment and maintenance of the annual $PM_{2.5}$ NAAQS.

Table V.C–1 contains the 2003–2007 base case period average and maximum annual $PM_{2.5}$ design values and the corresponding 2012 base case average and maximum design values for sites projected to be nonattainment of the annual $PM_{2.5}$ NAAQS in 2012. Table V.C–2 contains this same information for projected 2012 maintenance sites.

TABLE V.C–1—AVERAGE AND MAXIMUM 2003–2007 AND 2012 BASE CASE ANNUAL $PM_{2.5}$ DESIGN VALUES (μG/M³) AT PROJECTED NONATTAINMENT SITES

Monitor ID	State	County	Average design value 2003–2007	Maximum design value 2003–2007	Final rule average design value 2012	Final rule maximum design value 2012
010730023	Alabama	Jefferson	18.57	18.94	16.15	16.46
010732003	Alabama	Jefferson	17.15	17.69	15.16	15.64
131210039	Georgia	Fulton	17.43	17.47	15.07	15.10
171191007	Illinois	Madison	16.72	17.01	15.46	15.73
261630033	Michigan	Wayne	17.50	18.16	15.73	16.32

[25] U.S. EPA, 2007: Guidance on the Use of Models and Other Analyses for Demonstrating Attainment of Air Quality Goals for Ozone, $PM_{2.5}$, and Regional Haze; Office of Air Quality Planning and Standards, Research Triangle Park, NC.

[26] If there is only one complete design value, then the nonattainment and maintenance design values are the same.

[27] Design values were only used if they were deemed to be officially complete based on CFR 40 Part 50 Appendix N. The completeness criteria for the annual and 24-hour $PM_{2.5}$ NAAQS are different. Therefore, there are fewer complete sites for the annual NAAQS.

[28] For example, a calculated annual average concentration of 14.94753 * * * becomes 14.94 when digits beyond two places to the right of the decimal are truncated.

TABLE V.C–1—AVERAGE AND MAXIMUM 2003–2007 AND 2012 BASE CASE ANNUAL $PM_{2.5}$ DESIGN VALUES (μG/M³) AT PROJECTED NONATTAINMENT SITES—Continued

Monitor ID	State	County	Average design value 2003–2007	Maximum design value 2003–2007	Final rule average design value 2012	Final rule maximum design value 2012
390350038	Ohio	Cuyahoga	17.37	18.10	15.99	16.66
390350045	Ohio	Cuyahoga	16.47	16.98	15.14	15.61
390350060	Ohio	Cuyahoga	17.11	17.66	15.67	16.18
390610014	Ohio	Hamilton	17.29	17.53	15.76	15.98
390610042	Ohio	Hamilton	16.85	17.25	15.40	15.77
390618001	Ohio	Hamilton	17.54	17.90	16.01	16.33
420030064	Pennsylvania	Allegheny	20.31	20.75	17.94	18.33

TABLE V.C–2—AVERAGE AND MAXIMUM 2003–2007 AND 2012 BASE CASE ANNUAL $PM_{2.5}$ DESIGN VALUES (μG/M³) AT PROJECTED MAINTENANCE-ONLY SITES

Monitor ID	State	County	Average design value 2003–2007	Maximum design value 2003–2007	Final rule average design value 2012	Final rule maximum design value 2012
180970081	Indiana	Marion	16.05	16.36	14.86	15.16
180970083	Indiana	Marion	15.90	16.27	14.71	15.06
390350065	Ohio	Cuyahoga	15.97	16.44	14.67	15.10
390617001	Ohio	Hamilton	16.17	16.56	14.74	15.10

(2) Methodology for Projecting Future 24-Hour $PM_{2.5}$ Nonattainment and Maintenance

The procedures for calculating the future year 24-hour $PM_{2.5}$ design values have been updated for the final rule.[29] The revised procedures are in response to comments which noted relatively high future year 24-hour $PM_{2.5}$ design values in EPA's modeling of the proposed Transport Rule. The updates are intended to make the projection methodology more consistent with the procedures for calculating ambient design values.

As noted above, for the proposed Transport Rule EPA projected for each $PM_{2.5}$ monitor the measured 98th percentile concentrations from the 2003–2007 period to the future. As an additional check, we also projected the next highest concentrations from the three calendar quarters in each year when the 98th percentile did not occur in the 2003–2007 base period, to ensure that the future year 98th percentile did not switch seasons in the future year compared to the base year. A basic assumption in this methodology is that the distribution of high measured days in the base period will be the same in the future.

In other words, EPA assumed at proposal that the 98th-percentile day could only be displaced ''from below'' in the instance that a different day's future concentration exceeded the original 98th-percentile day's future concentration. In that case, the original 98th-percentile day may become the 97th- or 96th-percentile day in the future year; EPA accounted for this possibility at proposal. EPA did not, however, consider that the 98th-percentile day could also be displaced ''from above'' in the instance that higher-concentration days in the base period were projected to have future concentrations lower than the original 98th-percentile day's future concentration. In that case, the original 98th-percentile day may become the 99th- or 100th-percentile day. Because EPA continued to use that day's future concentration to determine the monitor's future design value at proposal, this sometimes resulted in overstatement of future-year design values for 24-hour $PM_{2.5}$ monitoring sites whose seasonal distribution of highest-concentration 24-hour $PM_{2.5}$ days changed between the 2003–2007 period and the future year modeling. Examination of the proposed rule remedy modeling (2014 remedy case) showed that many of the highest $PM_{2.5}$ days switched from the summer in the base period to the winter in the future period. This is especially true in areas of the upper Midwest which experience both high summer and winter $PM_{2.5}$ episodes.

In the revised methodology, we do not assume that the seasonal distribution of high days in the base period years and future years will remain the same. We project a larger set of ambient days from the base period to the future and then re-rank the entire set of days to find the new future 98th percentile value (for each year). More specifically, we project the highest 8 days per quarter (32 days per year) to the future and then re-rank the 32 days to derive the future year 98th percentile concentrations. In the case of the Transport Rule model results, this has the effect of lowering the future year 24-hour design values compared to the old methodology.

The modeling guidance recommendations for state attainment demonstrations have been updated to reflect the changes outlined above. Further details on the 24-hour $PM_{2.5}$ design value calculations can be found in the Air Quality Modeling Final Rule TSD. The above procedures for determining future year 24-hour $PM_{2.5}$ concentrations were applied for each site. The 24-hour $PM_{2.5}$ design values are truncated after the first decimal place. This approach is consistent with the ambient data truncation and rounding procedures for the 24-hour $PM_{2.5}$ NAAQS. Any value that is greater than or equal to 35.5 μg/m³ is rounded to 36 μg/m³ and is violating the NAAQS. Sites with future year 5-year weighted average design values of 35.5 μg/m³ or greater, based on the projection of 5-year weighted average concentrations, are predicted to be nonattainment. Sites with future year maximum design values of 35.5 μg/m³ or greater are predicted to be maintenance sites. Note that nonattainment sites for the 24-hour NAAQS are also maintenance sites because the maximum design value is always greater than or equal to the 5-year weighted average. The monitoring

[29] There were no updates to the ozone and annual $PM_{2.5}$ attainment test methodology.

sites that we project to be nonattainment and/or maintenance for the 24-hour $PM_{2.5}$ NAAQS in the 2012 base case are the nonattainment/maintenance receptors used for assessing the contribution of emissions in upwind states to downwind nonattainment and maintenance of 24-hour $PM_{2.5}$ NAAQS as part of this final rule.

Table V.C–3 contains the 2003–2007 base period average and maximum 24-hour $PM_{2.5}$ design values and the 2012 base case average and maximum design values for sites projected to be 2012 nonattainment of the 24-hour $PM_{2.5}$ NAAQS in 2012. Table V.C–4 contains this same information for projected 2012 24-hour maintenance sites.

TABLE V.C–3—AVERAGE AND MAXIMUM 2003–2007 AND 2012 BASE CASE 24-HOUR $PM_{2.5}$ DESIGN VALUES ($\mu G/M_3$) AT PROJECTED NONATTAINMENT SITES

Monitor ID	State	County	Average design value 2003–2007	Maximum design value 2003–2007	Final rule average design value 2012	Final rule maximum design value 2012
010730023	Alabama	Jefferson	44.0	44.2	36.9	37.3
170311016	Illinois	Cook	43.0	46.3	37.5	40.4
171191007	Illinois	Madison	39.1	40.1	36.5	36.8
180970043	Indiana	Marion	38.4	39.9	35.7	37.1
180970066	Indiana	Marion	38.3	39.6	35.7	36.9
180970081	Indiana	Marion	38.2	39.2	35.8	36.9
261470005	Michigan	St Clair	39.6	40.6	36.2	37.1
261630015	Michigan	Wayne	40.1	40.6	35.5	36.0
261630016	Michigan	Wayne	42.9	45.4	38.9	41.2
261630019	Michigan	Wayne	40.9	41.4	37.3	37.8
261630033	Michigan	Wayne	43.8	44.2	39.4	39.8
390350038	Ohio	Cuyahoga	44.2	47.0	39.4	41.8
390350060	Ohio	Cuyahoga	42.1	45.7	37.7	40.8
420030064	Pennsylvania	Allegheny	64.2	68.2	56.7	59.9
420030093	Pennsylvania	Allegheny	45.6	51.5	39.1	44.3
420030116	Pennsylvania	Allegheny	42.5	42.5	35.5	35.5
420070014	Pennsylvania	Beaver	43.4	44.6	36.2	37.4
420710007	Pennsylvania	Lancaster	40.8	44.0	35.9	38.3
540090011	West Virginia	Brooke	43.9	44.9	37.5	38.3
550790043	Wisconsin	Milwaukee	39.9	40.8	36.2	37.1

TABLE V.C–4—AVERAGE AND MAXIMUM 2003–2007 AND 2012 BASE CASE 24-HOUR $PM_{2.5}$ DESIGN VALUES ($\mu G/M^3$) AT PROJECTED MAINTENANCE-ONLY SITES

Monitor ID	State	County	Average design value 2003–2007	Maximum design value 2003–2007	Final rule average design value 2012	Final rule maximum design value 2012
010732003	Alabama	Jefferson	40.3	40.8	35.3	35.9
170310052	Illinois	Cook	40.2	41.4	34.9	36.0
170312001	Illinois	Cook	37.7	40.6	33.6	36.1
170313301	Illinois	Cook	40.2	43.3	34.9	37.6
170316005	Illinois	Cook	39.1	41.8	34.1	36.4
171190023	Illinois	Madison	37.3	38.1	35.1	35.8
180890022	Indiana	Lake	38.9	44.0	34.9	39.5
180890026	Indiana	Lake	38.4	41.3	34.0	37.0
261610008	Michigan	Washtenaw	39.4	40.8	35.0	36.3
390170003	Ohio	Butler	39.2	41.1	34.4	36.5
390350045	Ohio	Cuyahoga	38.5	41.5	34.7	38.1
390350065	Ohio	Cuyahoga	38.6	41.0	34.9	37.6
390618001	Ohio	Hamilton	40.6	40.9	35.2	35.8
390811001	Ohio	Jefferson	41.9	45.5	34.5	37.8
391130032	Ohio	Montgomery	37.8	40.0	33.6	35.6
420031008	Pennsylvania	Allegheny	41.3	42.8	35.0	36.3
420031301	Pennsylvania	Allegheny	40.3	42.4	33.9	35.6
420033007	Pennsylvania	Allegheny	37.5	43.1	32.3	37.3
421330008	Pennsylvania	York	38.2	40.7	33.3	36.0
550790010	Wisconsin	Milwaukee	38.6	40.0	35.4	36.7
550790026	Wisconsin	Milwaukee	37.3	41.3	33.6	37.2

(3) Methodology for Projecting Future 8-Hour Ozone Nonattainment and Maintenance

The final rule methodology to calculate 8-hour ozone nonattainment and maintenance receptors is identical to the proposed rule. The May-to-September 24-hour maximum 8-hour average concentrations from the 2005 base case and the 2012 base case were used to project ambient design values to 2012. The following is a brief summary of the future year 8-hour average ozone calculations. Additional details are provided in the Air Quality Modeling Final Rule TSD.

We are using the base period 2003–2007 ambient ozone design value data for projecting future year design values. Relative response factors (RRF) for each monitoring site were calculated as the

percent change in ozone on days with modeled ozone greater than 85 ppb.[30]

The maximum future design value is calculated by projecting design values for each of the three base periods (2003–2005, 2004–2006, and 2005–2007) separately. The highest of the three future values is the maximum design value. This maximum value is used to identify the 8-hour ozone maintenance receptors.

The future year design values are truncated to integers in units of ppb. This approach is consistent with the ambient data truncation and rounding procedures for the 8-hour ozone NAAQS. Future year design values that are greater than or equal to 85 ppb are considered to be violating the NAAQS. Sites with future year 5-year weighted average design values of 85 ppb or greater are predicted to be nonattainment. Sites with future year maximum design values of 85 ppb or greater are predicted to be future year maintenance sites. Note that, as described previously for the annual and 24-hour $PM_{2.5}$ NAAQS, nonattainment sites for the ozone NAAQS are also maintenance sites because the maximum design value is always greater than or equal to the 5-year weighted average. The monitoring sites that we project to be nonattainment and/or maintenance for the 8-hour ozone NAAQS in the 2012 base case are the nonattainment/maintenance receptors used for assessing the contribution of emissions in upwind states to downwind nonattainment and maintenance of ozone NAAQS.

Table V.C–5 contains the 2003–2007 base period average and maximum 8-hour ozone design values and the 2012 base case average and maximum design values for sites projected to be 2012 nonattainment of the 8-hour ozone NAAQS in 2012. Table V.C–6 contains this same information for projected 2012 8-hour ozone maintenance sites.

TABLE V.C–5—AVERAGE AND MAXIMUM 2003–2007 AND 2012 BASE CASE 8-HOUR OZONE DESIGN VALUES (PPB) AT PROJECTED NONATTAINMENT SITES

Monitor ID	State	County	Average design value 2003–2007	Maximum design value 2003–2007	Final rule average design value 2012	Final rule maximum design value 2012
220330003	Louisiana	East Baton Rouge	92.0	96	85.6	89.3
480391004	Texas	Brazoria	94.7	97	86.7	88.8
482010051	Texas	Harris	93.0	98	86.1	90.8
482010055	Texas	Harris	100.7	103	93.3	95.4
482010062	Texas	Harris	95.7	99	88.8	91.8
482010066	Texas	Harris	92.3	96	87.1	90.6
482011039	Texas	Harris	96.3	100	88.8	92.2

TABLE V.C–6—AVERAGE AND MAXIMUM 2003–2007 AND 2012 BASE CASE 8-HOUR OZONE DESIGN VALUES (PPB) AT PROJECTED MAINTENANCE-ONLY SITES

Monitor ID	State	County	Average design value 2003–2007	Maximum design value 2003–2007	Average design value 2012	Maximum design value 2012
090011123	Connecticut	Fairfield	92.3	94	83.9	85.5
090093002	Connecticut	New Haven	90.3	93	82.7	85.1
240251001	Maryland	Harford	92.7	94	84.4	85.6
260050003	Michigan	Allegan	90.0	93	82.4	85.1
482010024	Texas	Harris	88.0	92	83.4	87.2
482010029	Texas	Harris	91.7	93	84.2	85.4
482011015	Texas	Harris	89.0	96	82.4	88.9
482011035	Texas	Harris	86.3	95	79.9	88.0
482011050	Texas	Harris	89.3	92	82.8	85.4

D. Pollution Transport From Upwind States

1. Choice of Air Quality Thresholds

a. Thresholds

In this action, EPA uses air quality thresholds to identify linkages between upwind states and downwind nonattainment and maintenance receptors. States whose contributions to a specific receptor meet or exceed the thresholds identified are considered linked to that receptor; those states' emissions (and available emission reductions) are analyzed further in the second step of EPA's significant contribution analysis. States whose contributions are below the thresholds are not included in the Transport Rule for that NAAQS. In other words, we are finding that states whose contributions are below these thresholds do not significantly contribute to nonattainment or interfere with maintenance of the relevant NAAQS.

We use separate air quality thresholds for annual $PM_{2.5}$, 24-hour $PM_{2.5}$, and 8-hour ozone. Each air quality threshold is calculated as 1 percent of the NAAQS. Specifically, we use an air quality threshold of 0.15 μg/m³ for annual $PM_{2.5}$, 0.35 μg/m³ for 24-hour $PM_{2.5}$, and 0.8 ppb for 8-hour ozone. These are the same air quality thresholds we proposed.

EPA received a number of comments on the thresholds we proposed, and those comments and EPA's responses are discussed below.

b. General Comments on the Overall Stringency and Use of 1 Percent of the NAAQS

EPA received numerous comments supporting and opposing the proposed thresholds. A number of commenters cited support for EPA's approach. Some

[30] As specified in the attainment demonstration modeling guidance, if there are less than 10 modeled days > 85 ppb, then the threshold is lowered in 1 ppb increments (to as low as 70 ppb) until there are 10 days. If there are less than 5 days > 70 ppb, then an RRF calculation is not completed for that site.

commenters believed that use of a 1 percent threshold was too stringent, and recommended that EPA should use a threshold greater than 1 percent. Others believed that 1 percent was not stringent enough, and they recommended using a lower value such as 0.5 percent. EPA believes that for both $PM_{2.5}$ and for ozone, it is appropriate to use a threshold of 1 percent of the NAAQS for identifying states whose contributions do not significantly contribute to nonattainment or interfere with maintenance of the relevant NAAQS; therefore, EPA has retained the 1 percent threshold for the reasons described below.

As we found at the time of CAIR, EPA's analysis of base case $PM_{2.5}$ transport shows that, in general, $PM_{2.5}$ nonattainment problems result from the combined impact of relatively small contributions from many upwind states, along with contributions from in-state sources and, in some cases, substantially larger contributions from a subset of particular upwind states. (*See* section II of the January 2004 CAIR proposal, 69 FR 4575–87).

In the 1998 NO_X SIP Call (63 FR 57456, October 27, 1998) and in CAIR, EPA also found important contributions from multiple upwind states. As a result of the upwind ''collective contributions,'' EPA determined that it is appropriate to use a low air quality threshold when analyzing upwind states' contributions to downwind states' attainment and maintenance problems for ozone as well as $PM_{2.5}$.

Low threshold values are also warranted, as EPA discussed in the notices for CAIR, due to adverse health impacts associated with ambient $PM_{2.5}$ and ozone even at low concentrations (See relevant portions of the CAIR proposal notice (63 FR 4583–84) and the CAIR final rule notice (70 FR 25189–25192)).

To aid in responding to comments, EPA has compiled the contribution modeling results to analyze the impact of different possible thresholds. This analysis demonstrates the reasonableness of using the 1 percent threshold to account for the combined impact of relatively small contributions from many upwind states (see Air Quality Modeling Final Rule TSD). In this analysis, EPA identifies for annual $PM_{2.5}$ (sulfate and nitrate), 24-hour $PM_{2.5}$ (sulfate and nitrate), and 8-hour ozone receptors: (1) Total upwind state contributions, and (2) the amount of the total upwind state contribution that is captured at thresholds of 1 percent, 5 percent and 0.5 percent of the NAAQS. EPA continues to find that the total ''collective contribution'' from upwind sources represents a large portion of $PM_{2.5}$ and ozone at downwind locations and that the total amount of transport is composed of the individual contribution from numerous upwind states.

The analysis shows that the 1 percent threshold captures a high percentage of the total pollution transport affecting downwind states for both $PM_{2.5}$ and ozone. In response to commenters who advocated a higher threshold, EPA observes that higher thresholds would exclude increasingly large percentages of total transport, which we do not believe would be appropriate. For example, a 5 percent threshold would exclude the majority—and for annual PM, more than 80 percent—of interstate pollution transport affecting the downwind state receptors analyzed (based on the average percentage of total interstate transport across all receptors captured at the 5 percent threshold).

In response to commenters who advocated a lower threshold, EPA observes that the analysis shows that a lower threshold such as 0.5 percent would result in relatively modest increases in the overall percentages of $PM_{2.5}$ and ozone pollution transport captured relative to the amounts captured at the 1 percent level. A 0.5 percent threshold could lead to emission reduction responsibilities in additional states that individually have a very small impact on those receptors—an indicator that emission controls in those states are likely to have a smaller air quality impact at the downwind receptor. We are not convinced that selecting a threshold below 1 percent is necessary or desirable. A strong indication that the amount of pollution transport being excluded from consideration is not excessive is that the controls required under this rule are projected to eliminate nonattainment and maintenance problems with air quality standards at most downwind state receptors.

Considering the combined downwind impact of multiple upwind states, the health effects of low levels of $PM_{2.5}$ and ozone pollution, and EPA's previous use of a 1 percent threshold for $PM_{2.5}$ in CAIR, EPA's judgment is that the 1 percent threshold is a reasonable choice.

Some commenters noted that the $PM_{2.5}$ thresholds used for this rule are less than the ''significant impact levels'' (SILs) used for permitting programs. As EPA stated at the time of CAIR, since the thresholds referred to by the commenters serve different purposes than the CAIR threshold for significant contribution, it does not follow that they should be made equivalent (70 FR 25191; May 12, 2005).

c. Comments on the Rounding Conventions for $PM_{2.5}$

In the final Transport Rule, EPA is using two-digit values for the $PM_{2.5}$ thresholds. Some commenters suggested that EPA should use the same rounding convention for annual $PM_{2.5}$ used in CAIR; that is, the threshold should be 0.2 $\mu g/m^3$ rather than 0.15 $\mu g/m^3$. The reasons for EPA's decision are below.

The rationale for the single digit value for the final CAIR rule was that a single digit is consistent with the EPA monitoring data reporting requirements in Part 50, Appendix N, section 4.3. These reporting requirements specify that design values for the annual $PM_{2.5}$ standard shall be rounded to the tenths place (decimals 0.05 and greater are rounded up to the next 0.1, and any decimal lower than 0.05 is rounded down to the nearest 0.1).

Because the design value is to be reported only to the nearest 0.1 $\mu g/m^3$, EPA deemed it preferable for the final CAIR to select the threshold value at the nearest 0.1 $\mu g/m^3$ as well, and hence one percent of the 15 $\mu g/m^3$, rounded to the nearest 0.1 $\mu g/m^3$ became 0.2 $\mu g/m^3$.

The reporting requirements in section Part 50, Appendix N, section 4.3 for the 24-hour $PM_{2.5}$ standard state that design values for this standard shall be rounded to the nearest 1 $\mu g/m^3$ (decimals 0.5 and greater are rounded up to the nearest whole number, and any decimal lower than 0.5 is rounded down to the nearest whole number).

If the approach used in CAIR were to be used to establish an air quality threshold for the 24-hour $PM_{2.5}$ NAAQS (which CAIR did not address), the resulting threshold would be zero. One percent of the 24-hour standard is 0.35 $\mu g/m^3$, and rounding to the nearest whole number would yield an air quality threshold of zero. Thus if we were to apply the same rationale used to develop the annual $PM_{2.5}$ threshold for the final CAIR, there would be no air quality threshold for 24-hour $PM_{2.5}$, which EPA believes to be counter-intuitive and unworkable as an approach for assessing interstate contributions.

Therefore, for this rule, EPA proposed and is now finalizing an approach that decouples the precision of the air quality thresholds from the monitoring reporting requirements, and uses 2-digit values representing one percent of the $PM_{2.5}$ NAAQS; that is, 0.15 $\mu g/m^3$ for the annual standard, and 0.35 $\mu g/m^3$ for the 24-hour standard. EPA believes there are a number of considerations favoring this approach. First, it provides for a consistent approach for the annual and 24-hour standards. Second, the

approach is readily applicable to any current and future NAAQS and would automatically adjust the stringency of the transport threshold to maintain a constant relationship with the stringency of the relevant NAAQS as they are revised. The CAIR approach would not allow for this continuity: For example, if EPA were to retain the CAIR approach for the annual standard, any future lowering of the $PM_{2.5}$ NAAQS to below 15 μg/m³ would reduce the air quality threshold to the same outcome: 0.1 μg/m³. This would occur because any value less than 0.15 μg/m³ would round to 0.1 μg/m³ (assuming EPA would not round down to zero for the reasons described above), which means that the air quality threshold would have a different relative stringency to each possible future NAAQS value. For the above reasons, EPA believes the use of two-digit thresholds for both annual $PM_{2.5}$ and 24-hour $PM_{2.5}$ in the final rule is both reasonable and appropriate. The departure from the approach used for annual $PM_{2.5}$ in CAIR is appropriate given the additional considerations that were not in existence at the time of the final CAIR, and the importance of using a consistent approach to developing air quality thresholds for all NAAQS addressed by this rule as well as future NAAQS considered in future transport-related actions.

Some of these commenters suggested using the CAIR rounding conventions coupled with use of a 1-digit threshold of 0.4 μg/m³ for 24-hour $PM_{2.5}$. EPA considered the approach suggested by commenters, but determined that the proposed approach is more appropriate. First, adhering to the rounding conventions used for CAIR for annual $PM_{2.5}$ is not workable for the 24-hour standard because the rounding convention would yield a threshold of zero. Rounding alternatively to 0.4 μg/m³ would require EPA to find a basis for rounding the threshold to the nearest 0.1 μg/m³ instead of using a strict application of 1 percent; we do not see any basis for such rounding at this time.

d. Comments Related to the Multi-Factor Test EPA Used for Ozone in CAIR

Some commenters suggested that, for ozone, EPA should use the multiple-metric test we used for CAIR, and not a simple threshold based on 1 percent of the NAAQS. With respect to ozone, EPA proposed in the Transport Rule to take a more straightforward approach to air quality thresholds than the multi-factor approaches used for the NO_X SIP Call and the CAIR. As proposed, EPA is using a contribution metric that is calculated based on the multi-day average contribution. This metric is compared to one percent of the 1997 8-hour ozone standard of 0.08 ppm. Under this approach, one percent of the NAAQS is a value of 0.8 ppb. Contributions of 0.8 ppb and higher are above the threshold; ozone contributions less than 0.8 ppb are below the threshold. In past rulemakings (*e.g.,* CAIR) EPA used multiple ozone metrics, including the average contribution and maximum single day contribution to downwind nonattainment. EPA believes the average contribution (calculated over multiple high ozone days) is a robust metric compared to the maximum contribution on a single day. EPA believes that this approach is preferable because it uses a robust metric, it is consistent with the approach for $PM_{2.5}$, and it provides for a consistent approach that takes into account, and is applicable to, any future ozone standards below 0.08 ppm.

One of these commenters suggested that the 0.8 ppb threshold value was substantially more stringent than the 2 ppb screening test which was a part of the approach used for CAIR. The 1 percent threshold (0.8 ppb) is not substantially more stringent than the previous 2 ppb test because of differences in the metrics used to evaluate contributions against these two levels. The 2 ppb test was evaluated using the highest single day absolute model-predicted downwind contribution from an upwind state. The 1 percent threshold is evaluated based on the average relative downwind impact calculated over multiple days. Therefore, it is appropriate to set a lower concentration threshold for use with the average contribution metric calculated for the Transport Rule. More details on the calculation of the contribution metric can be found in the Air Quality Modeling Final Rule TSD. As noted above, EPA believes that the approach used for the proposed rule provides for a simplified, yet robust approach compared to CAIR. Accordingly, for the final rule we have retained the approach used for the proposal.

One commenter suggested that EPA retain the CAIR multiple-factor approach for ozone, and to apply that same approach to 24-hour $PM_{2.5}$. As noted above, EPA is not retaining this approach for ozone, and for similar reasons we believe a multi-factor approach is not needed for 24-hour $PM_{2.5}$. The approach based on 1 percent of the NAAQS is consistent with the form of the 24-hour standard. In addition, this approach is based on contributions on days with high 24-hour $PM_{2.5}$ predictions and therefore is relevant for characterizing transport during short-term high $PM_{2.5}$ episodic conditions.

e. Comments on the Relationship to Measurement Precision

Other commenters suggested that, as did commenters on the thresholds used in CAIR, EPA should take into consideration the measurement precision of existing $PM_{2.5}$ monitors in setting the thresholds for the Transport Rule. EPA disagrees that monitoring precision is relevant to determining the amount of modeled $PM_{2.5}$ or ozone that should be considered to be a ''contribution'' from upwind states since states are not required to, nor would it be possible for them to, measure their individual state impacts on downwind receptors. The approach for eliminating significant contribution is based on the implementation of enforceable emissions budgets and not on a measurement of ambient air quality. Thus, EPA believes it is a reasonable exercise of its discretion to de-couple monitoring precision from the choice of contribution states.

f. Comments Related to the CAIR Court Decision

Commenters recommended that EPA should have retained the criteria used for CAIR because those values were upheld by the Court. As noted above, EPA could not have used the approach for annual $PM_{2.5}$ that was used in CAIR to develop a 24-hour $PM_{2.5}$ threshold, as that approach would have yielded a threshold value of zero 24-hour $PM_{2.5}$.

Further, nothing in the *North Carolina* opinion suggests that the thresholds and methods used in CAIR were the only possible approaches EPA could have used, that they were preferable to other approaches, or that other alternatives would not be acceptable. Instead, the Court upheld the 0.2 μg/m³ threshold used for $PM_{2.5}$ on the grounds that it was not ''wholly unsupported by the record'' (*North Carolina,* 531 F.3d at 915). EPA has determined for reasons explained in the record that the thresholds used in this final rule are both reasonable and appropriate for use in this final rule.

2. Approach for Identifying Contributing Upwind States

This section documents the procedures used by EPA to quantify the contribution of emissions in specific upwind states to air quality concentrations in projected 2012 downwind nonattainment and maintenance locations for annual $PM_{2.5}$, 24-hour $PM_{2.5}$, and 8-hour ozone. In the

proposed rule EPA used CAMx photochemical source apportionment modeling to quantify the impact of emissions in specific upwind states on projected downwind nonattainment and maintenance receptors for both $PM_{2.5}$ and 8-hour ozone. In this modeling we tracked the ozone and $PM_{2.5}$ formed from 2012 base case emissions from anthropogenic sources in each upwind state in the 12 km modeling domain. The CAMx Particulate Source Apportionment Technique (PSAT) was used to calculate downwind contributions to nonattainment and maintenance of $PM_{2.5}$. In the PSAT simulation NO_X emissions are tracked to particulate nitrate concentrations, SO_2 emissions are tracked to particulate sulfate concentrations, and primary particulates (organic carbon, elemental carbon, and other $PM_{2.5}$) are tracked as primary particulates. As described earlier in section V.A, the nitrate and sulfate contributions were combined and used to evaluate interstate contributions of $PM_{2.5}$.

The CAMx Ozone Source Apportionment Technique (OSAT) was used to calculate downwind 8-hour ozone contributions to nonattainment and maintenance. OSAT tracks the formation of ozone from NO_X and VOC emissions.

Comment: Three commenters stated that the CAMx source apportionment techniques used for the proposed rule reflect state-of-the science technologies and are appropriate for evaluating interstate transport. One commenter asked that EPA do more to demonstrate that the PSAT and OSAT techniques give reliable answers, although no suggestions were provided on how this might be done. Another commenter said that the results of the contribution analyses were consistent with the results of their scientific research.

Response: EPA is not changing its conclusion that the CAMx source apportionment techniques are appropriate for quantifying interstate transport. The strength of the source apportionment technique is that all modeled ozone and/or $PM_{2.5}$ mass at a given location in the modeling domain is tracked back to specific sources of emissions and boundary conditions to fully characterize culpable sources. No commenters provided technically valid analyses indicating that EPA's use of CAMx source apportionment techniques are inappropriate for the purposes of the Transport Rule.

Comment: We received comments that certain states included in the proposed rule should be excluded from the final rule because EPA had overstated the 2012 emissions in these states. Commenter requested that we redo the contribution modeling using 2012 base case emission inventories that are revised based on proposed rule comments. Several commenters also asked that EPA update the contribution modeling analyses using the latest version of CAMx.

Response: In response to these comments, we have rerun our source apportionment modeling for $PM_{2.5}$ and ozone for the 2012 base case using the updated emission inventories described above in section V.C.1 and the latest version of CAMx, version 5.30.

The states EPA analyzed for interstate contributions for ozone and for $PM_{2.5}$ for the final rule are: Alabama, Arkansas, Connecticut, Delaware, Florida, Georgia, Illinois, Indiana, Iowa, Kansas, Kentucky, Louisiana, Maine, Maryland,[31] Massachusetts, Michigan, Minnesota, Mississippi, Missouri, Nebraska, New Hampshire, New Jersey, New York, North Carolina, North Dakota, Ohio, Oklahoma, Pennsylvania, Rhode Island, South Carolina, South Dakota, Tennessee, Texas, Vermont, Virginia, West Virginia, and Wisconsin.[32] These are the same states that EPA analyzed for the proposed rule.

For the proposed rule, we used a relative approach for calculating the contributions to downwind nonattainment and maintenance receptors from the outputs of the source apportionment modeling. As part of this approach, the source apportionment predictions are combined with measurement-based concentrations to calculate the contributions from each state to nonattainment and/or maintenance receptors. This is similar to the approach used to calculate future year design values, as described in section V.C.2.

Comment: One commenter said that using the source apportionment modeling predictions in a relative sense strengthens the determination of contributions and addresses an important source of uncertainty. There were no comments that suggested an alternative approach.

Response: For the final Transport Rule we are applying the relative approach developed for the proposed rule to calculate contributions from each state to downwind nonattainment and maintenance receptors.

As noted above, for the final rule we modeled the updated 2012 base case emissions using CAM_X v5.30 to determine the contributions from emissions in upwind states to nonattainment and maintenance sites in downwind states. Contributions to nonattainment and maintenance receptors are evaluated independently for each state to determine if the contributions are at or above the threshold criteria.

For each upwind state, the maximum contribution to nonattainment is calculated based on the single largest contribution to a future year (2012) downwind nonattainment receptor. The maximum contribution to maintenance is calculated based on the single largest contribution to a future year (2012) downwind maintenance receptor. Since the contributions are calculated independently for each receptor, the upwind contribution to maintenance can sometimes be larger than the contribution to nonattainment, and vice versa. This also means that maximum contributions to nonattainment can be below the threshold while maximum contributions to maintenance may be at or above the threshold, or vice versa.

V.D.2.a. Estimated Interstate Contributions to Annual $PM_{2.5}$ and 24-Hour $PM_{2.5}$

In this section, we present the interstate contributions from emissions in upwind states to downwind nonattainment and maintenance sites for the annual $PM_{2.5}$ NAAQS and the 24-hour $PM_{2.5}$ NAAQS based on modeling updated for the final rule. As described previously in section V.D.1, states which contribute 0.15 $\mu g/m^3$ or more to annual $PM_{2.5}$ nonattainment or maintenance in another state are identified as states with contributions large enough to warrant further analysis. For 24-hour $PM_{2.5}$, states which contribute 0.35 $\mu g/m^3$ or more to 24-hour $PM_{2.5}$ nonattainment or maintenance in another state are identified as states with contributions to downwind nonattainment and maintenance sites large enough to warrant further analysis.

For annual $PM_{2.5}$, we calculated each state's contribution to each of the 12 monitoring sites that are projected to be nonattainment and each of the 4 sites that are projected to have maintenance problems for the annual $PM_{2.5}$ NAAQS in the 2012 base case. A detailed

[31] As in the proposal, EPA has combined the contributions from Maryland and the District of Columbia as a single entity in our contribution analysis for the final rule. EPA believes that this is a fair representation of emissions for transport analysis because of the small size of the District of Columbia and its close proximity to Maryland. However, the District of Columbia is not included in the Transport Rule due to the significant contribution analysis findings in section VI.D.

[32] There were also several other states that are only partially contained within the 12 km modeling domain (i.e., Colorado, Montana, New Mexico, and Wyoming). However, EPA did not individually track the emissions or assess the contribution from emissions in these states.

description of the calculations can be found in the Air Quality Modeling Final Rule TSD. The largest contribution from each state to annual $PM_{2.5}$ nonattainment in downwind sites is provided in Table V.D–1. The Largest Contribution from Each State to Annual $PM_{2.5}$ maintenance in downwind sites is also provided in Table V.D–1. The contributions from each state to all projected 2012 nonattainment and maintenance sites for the annual $PM_{2.5}$ NAAQS are provided in the Air Quality Modeling Final Rule TSD.

TABLE V.D–1—LARGEST CONTRIBUTION TO DOWNWIND ANNUAL $PM_{2.5}$ (μG/M³) NONATTAINMENT AND MAINTENANCE FOR EACH OF 37 STATES

Upwind state	Largest downwind contribution to nonattainment for annual $PM_{2.5}$ (μg/m³)	Largest downwind contribution to maintenance for annual $PM_{2.5}$ (μg/m³)
Alabama	0.51	0.19
Arkansas	0.10	0.04
Connecticut	0.00	0.00
Delaware	0.00	0.00
Florida	0.08	0.01
Georgia	0.46	0.13
Illinois	0.50	0.65
Indiana	1.34	1.27
Iowa	0.26	0.14
Kansas	0.09	0.04
Kentucky	0.94	0.81
Louisiana	0.09	0.03
Maine	0.00	0.00
Maryland	0.15	0.06
Massachusetts	0.00	0.00
Michigan	0.64	0.64
Minnesota	0.14	0.09
Mississippi	0.05	0.01
Missouri	1.22	0.27
Nebraska	0.06	0.03
New Hampshire	0.00	0.00
New Jersey	0.02	0.01
New York	0.21	0.21
North Carolina	0.20	0.06
North Dakota	0.06	0.04
Ohio	1.34	0.94
Oklahoma	0.08	0.03
Pennsylvania	0.54	0.54
Rhode Island	0.00	0.00
South Carolina	0.24	0.04
South Dakota	0.03	0.01
Tennessee	0.32	0.32
Texas	0.18	0.07
Vermont	0.00	0.00
Virginia	0.12	0.06
West Virginia	0.95	0.40
Wisconsin	0.22	0.19

Based on the state-by-state contribution analysis, there are 18 states [33] which contribute 0.15 μg/m³ or more to downwind annual $PM_{2.5}$ nonattainment. These states are: Alabama, Georgia, Illinois, Indiana, Iowa, Kentucky, Maryland, Michigan, Missouri, New York, North Carolina, Ohio, Pennsylvania, South Carolina, Tennessee, Texas, West Virginia, and Wisconsin. In Table V.D–2, we provide a list of the downwind nonattainment sites to which each upwind state contributes 0.15 μg/m³ or more (*i.e.,* the upwind state to downwind nonattainment ''linkages'').

There are 12 states which contribute 0.15 μg/m³ or more to downwind annual $PM_{2.5}$ maintenance. These states are: Alabama, Illinois, Indiana, Kentucky, Michigan, Missouri, New York, Ohio, Pennsylvania, Tennessee, West Virginia, and Wisconsin. In Table V.D–3, we provide a list of the downwind maintenance sites to which each upwind state contributes 0.15 μg/m³ or more (*i.e.,* the upwind state to downwind maintenance ''linkages'').

[33] As in the proposal, EPA has combined the contributions from Maryland and the District of Columbia as a single entity in our contribution analysis for the final rule. EPA believes that this is a fair representation of emissions for transport analysis because of the small size of the District of Columbia and its close proximity to Maryland. However, the District of Columbia is not included in the Transport Rule due to the significant contribution analysis findings in section VI.D.

TABLE V.D–2—UPWIND STATE TO DOWNWIND NONATTAINMENT SITE "LINKAGES" FOR ANNUAL $PM_{2.5}$

Upwind state	Downwind receptor sites			
Alabama	Fulton, GA (131210039)	Hamilton, OH (390610014)	Hamilton, OH (390610042)	Hamilton, OH (390618001).
Georgia	Jefferson, AL (10730023)	Jefferson, AL (10732003).		
Illinois	Jefferson, AL (10732003)	Fulton, GA (131210039)	Wayne, MI (261630033)	Cuyahoga, OH (390350038).
	Cuyahoga, OH (390350045)	Cuyahoga, OH (390350060)	Hamilton, OH (390610014)	Hamilton, OH (390610042).
	Hamilton, OH (390618001)	Allegheny, PA (420030064).		
Indiana	Jefferson, AL (10730023)	Jefferson, AL (10732003)	Fulton, GA (131210039)	Madison, IL (171191007).
	Wayne, MI (261630033)	Cuyahoga, OH (390350038)	Cuyahoga, OH (390350045)	Cuyahoga, OH (390350060).
	Hamilton, OH (390610014)	Hamilton, OH (390610042)	Hamilton, OH (390618001)	Allegheny, PA (420030064).
Iowa	Madison, IL (171191007).			
Kentucky	Jefferson, AL (10730023)	Jefferson, AL (10732003)	Fulton, GA (131210039)	Madison, IL (171191007).
	Wayne, MI (261630033)	Cuyahoga, OH (390350038)	Cuyahoga, OH (390350045)	Cuyahoga, OH (390350060).
	Hamilton, OH (390610014)	Hamilton, OH (390610042)	Hamilton, OH (390618001)	Allegheny, PA (420030064).
Maryland	Allegheny, PA (420030064).			
Michigan	Madison, IL (171191007)	Cuyahoga, OH (390350038)	Cuyahoga, OH (390350045)	Cuyahoga, OH (390350060).
	Hamilton, OH (390610014)	Hamilton, OH (390610042)	Hamilton, OH (390618001)	Allegheny, PA (420030064).
Missouri	Madison, IL (171191007)	Cuyahoga, OH (390350038)	Cuyahoga, OH (390350045)	Cuyahoga, OH (390350060).
	Hamilton, OH (390610014)	Hamilton, OH (390610042)	Hamilton, OH (390618001).	
New York	Cuyahoga, OH (390350038)	Cuyahoga, OH (390350045)	Cuyahoga, OH (390350060)	Allegheny, PA (420030064).
North Carolina	Fulton, GA (131210039).			
Ohio	Jefferson, AL (10730023)	Jefferson, AL (10732003)	Fulton, GA (131210039)	Madison, IL (171191007).
	Wayne, MI (261630033)	Allegheny, PA (420030064).		
Pennsylvania	Fulton, GA (131210039)	Wayne, MI (261630033)	Cuyahoga, OH (390350038)	Cuyahoga, OH (390350045).
	Cuyahoga, OH (390350060)	Hamilton, OH (390610014)	Hamilton, OH (390610042)	Hamilton, OH (390618001).
South Carolina	Fulton, GA (131210039).			
Tennessee	Jefferson, AL (10730023)	Jefferson, AL (10732003)	Fulton, GA (131210039)	Madison, IL (171191007).
	Hamilton, OH (390610014)	Hamilton, OH (390610042)	Hamilton, OH (390618001).	
Texas	Madison, IL (171191007).			
West Virginia	Fulton, GA (131210039)	Wayne, MI (261630033)	Cuyahoga, OH (390350038)	Cuyahoga, OH (390350045).
	Cuyahoga, OH (390350060)	Hamilton, OH (390610014)	Hamilton, OH (390610042)	Hamilton, OH (390618001).
	Allegheny, PA (420030064).			
Wisconsin	Madison, IL (171191007)	Wayne, MI (261630033)	Cuyahoga, OH (390350038)	Cuyahoga, OH (390350045)
	Cuyahoga, OH (390350060)	Hamilton, OH (390610014)	Hamilton, OH (390618001).	

TABLE V.D–3—UPWIND STATE TO DOWNWIND MAINTENANCE SITE "LINKAGES" FOR ANNUAL $PM_{2.5}$

Upwind state	Downwind receptor sites			
Alabama	Marion, IN (180970081)	Marion, IN (180970083)	Hamilton, OH (390617001).	
Illinois	Marion, IN (180970081)	Marion, IN (180970083)	Cuyahoga, OH (390350065)	Hamilton, OH (390617001).
Indiana	Cuyahoga, OH (390350065)	Hamilton, OH (390617001).		
Kentucky	Marion, IN (180970081)	Marion, IN (180970083)	Cuyahoga, OH (390350065)	Hamilton, OH (390617001).
Michigan	Marion, IN (180970081)	Marion, IN (180970083)	Cuyahoga, OH (390350065)	Hamilton, OH (390617001).
Missouri	Marion, IN (180970081)	Marion, IN (180970083)	Cuyahoga, OH (390350065)	Hamilton, OH (390617001).
New York	Cuyahoga, OH (390350065).			
Ohio	Marion, IN (180970081)	Marion, IN (180970083).		
Pennsylvania	Marion, IN (180970081)	Marion, IN (180970083)	Cuyahoga, OH (390350065)	Hamilton, OH (390617001).
Tennessee	Marion, IN (180970081)	Marion, IN (180970083)	Hamilton, OH (390617001).	
West Virginia	Marion, IN (180970081)	Marion, IN (180970083)	Cuyahoga, OH (390350065)	Hamilton, OH (390617001).
Wisconsin	Marion, IN (180970081)	Marion, IN (180970083)	Cuyahoga, OH (390350065)	Hamilton, OH (390617001).

For 24-hour $PM_{2.5}$, we calculated each state's contribution to each of the 20 monitoring sites that are projected to be nonattainment and each of the 21 sites that are projected to have maintenance problems for the 24-hour $PM_{2.5}$ NAAQS in the 2012 base case. A detailed description of the calculations can be found in the Air Quality Modeling Final Rule TSD. The largest contribution from each state to 24-hour $PM_{2.5}$ nonattainment in downwind sites is provided in Table V.D–4. The largest contribution from each state to 24-hour $PM_{2.5}$ maintenance in downwind sites is also provided in Table V.D–4. The contributions from each state to all projected 2012 nonattainment and maintenance sites for the 24-hour $PM_{2.5}$ NAAQS are provided in the Air Quality Modeling Final Rule TSD.

TABLE V.D–4—LARGEST CONTRIBUTION TO DOWNWIND 24-HOUR $PM_{2.5}$ ($\mu G/M^3$) NONATTAINMENT AND MAINTENANCE FOR EACH OF 37 STATES

Upwind state	Largest downwind contribution to non-attainment for 24-hour $PM_{2.5}$ ($\mu g/m^3$)	Largest downwind contribution to maintenance for 24-hour $PM_{2.5}$ ($\mu g/m^3$)
Alabama	0.51	0.42

TABLE V.D–4—LARGEST CONTRIBUTION TO DOWNWIND 24-HOUR $PM_{2.5}$ (μG/M³) NONATTAINMENT AND MAINTENANCE FOR EACH OF 37 STATES—Continued

Upwind state	Largest downwind contribution to non-attainment for 24-hour $PM_{2.5}$ (μg/m³)	Largest downwind contribution to maintenance for 24-hour $PM_{2.5}$ (μg/m³)
Arkansas	0.24	0.23
Connecticut	0.10	0.18
Delaware	0.22	0.20
Florida	0.07	0.03
Georgia	1.10	0.92
Illinois	3.72	5.70
Indiana	3.56	5.15
Iowa	0.82	1.55
Kansas	0.37	0.81
Kentucky	4.38	3.58
Louisiana	0.11	0.13
Maine	0.06	0.10
Maryland	2.83	2.11
Massachusetts	0.19	0.30
Michigan	1.86	2.03
Minnesota	0.61	1.01
Mississippi	0.06	0.07
Missouri	3.73	3.71
Nebraska	0.24	0.52
New Hampshire	0.05	0.10
New Jersey	0.68	0.75
New York	0.83	1.34
North Carolina	0.40	0.38
North Dakota	0.21	0.33
Ohio	5.85	4.74
Oklahoma	0.17	0.20
Pennsylvania	2.85	2.29
Rhode Island	0.02	0.03
South Carolina	0.29	0.25
South Dakota	0.10	0.17
Tennessee	1.38	1.30
Texas	0.37	0.33
Vermont	0.03	0.05
Virginia	1.21	1.01
West Virginia	4.02	3.33
Wisconsin	0.69	0.97

Based on the state-by-state contribution analysis, there are 21 states [34] which contribute 0.35 μg/m³ or more to downwind 24-hour $PM_{2.5}$ nonattainment. These states are: Alabama, Georgia, Illinois, Indiana, Iowa, Kansas, Kentucky, Maryland, Michigan, Minnesota, Missouri, New Jersey, New York, North Carolina, Ohio, Pennsylvania, Tennessee, Texas, Virginia, West Virginia, and Wisconsin. In Table V.D–5, we provide a list of the downwind nonattainment counties to which each upwind state contributes 0.35 μg/m³ or more (*i.e.,* the upwind state to downwind nonattainment ''linkages'').

There are 21 states which contribute 0.35 μg/m³ or more to downwind 24-hour $PM_{2.5}$ maintenance. These states are: Alabama, Georgia, Illinois, Indiana, Iowa, Kansas, Kentucky, Maryland, Michigan, Minnesota, Missouri, Nebraska, New Jersey, New York, North Carolina, Ohio, Pennsylvania, Tennessee, Virginia, West Virginia, and Wisconsin. In Table V.D–6, we provide a list of the downwind maintenance sites to which each upwind state contributes 0.35 μg/m³ or more (*i.e.,* the upwind state to downwind maintenance ''linkages'').

TABLE V.D–5—UPWIND STATE TO DOWNWIND NONATTAINMENT SITE ''LINKAGES'' FOR 24-HOUR $PM_{2.5}$

Upwind state	Downwind receptor sites			
Alabama	Marion, IN (180970043)	Marion, IN (180970066)	Marion, IN (180970081).	
Georgia	Jefferson, AL (10730023).			
Illinois	Marion, IN (180970043)	Marion, IN (180970066)	Marion, IN (180970081)	St Clair, MI (261470005).
	Wayne, MI (261630015)	Wayne, MI (261630016)	Wayne, MI (261630019)	Wayne, MI (261630033).
	Cuyahoga, OH (390350038)	Cuyahoga, OH (390350060)	Allegheny, PA (420030064)	Allegheny, PA (420030093).
	Allegheny, PA (420030116)	Beaver, PA (420070014)	Brooke, WV (540090011)	Milwaukee, WI (550790043).

[34] As in the proposal, EPA has combined the contributions from Maryland and the District of Columbia as a single entity in our contribution analysis for the final rule. EPA believes that this is a fair representation of emissions for transport analysis because of the small size of the District of Columbia and its close proximity to Maryland. However, the District of Columbia is not included in the Transport Rule due to the significant contribution analysis findings in section VI.D.

TABLE V.D–5—UPWIND STATE TO DOWNWIND NONATTAINMENT SITE "LINKAGES" FOR 24-HOUR $PM_{2.5}$—Continued

Indiana	Jefferson, AL (10730023)	Cook, IL (170311016)	Madison, IL (171191007)	St Clair, MI (261470005).
	Wayne, MI (261630015)	Wayne, MI (261630016)	Wayne, MI (261630019)	Wayne, MI (261630033).
	Cuyahoga, OH (390350038)	Cuyahoga, OH (390350060)	Allegheny, PA (420030064)	Allegheny, PA (420030093).
	Allegheny, PA (420030116)	Beaver, PA (420070014)	Brooke, WV (540090011)	Milwaukee, WI (550790043).
Iowa	Cook, IL (170311016)	Madison, IL (171191007)	Milwaukee, WI (550790043).	
Kansas	Madison, IL (171191007).			
Kentucky	Jefferson, AL (10730023)	Cook, IL (170311016)	Madison, IL (171191007)	Marion, IN (180970043).
	Marion, IN (180970066)	Marion, IN (180970081)	St Clair, MI (261470005)	Wayne, MI (261630015).
	Wayne, MI (261630016)	Wayne, MI (261630019)	Wayne, MI (261630033)	Cuyahoga, OH (390350038).
	Cuyahoga, OH (390350060)	Allegheny, PA (420030064)	Allegheny, PA (420030093)	Allegheny, PA (420030116).
	Beaver, PA (420070014)	Brooke, WV (540090011)	Milwaukee, WI (550790043).	
Maryland	Cuyahoga, OH (390350038)	Lancaster, PA (420710007).		
Michigan	Cook, IL (170311016)	Madison, IL (171191007)	Cuyahoga, OH (390350038)	Cuyahoga, OH (390350060).
	Allegheny, PA (420030064)	Allegheny, PA (420030093)	Beaver, PA (420070014)	Brooke, WV (540090011).
	Milwaukee, WI (550790043).			
Minnesota	Milwaukee, WI (550790043).			
Missouri	Cook, IL (170311016)	Madison, IL (171191007)	Marion, IN (180970043)	Marion, IN (180970066).
	Marion, IN (180970081)	St Clair, MI (261470005)	Wayne, MI (261630015)	Allegheny, PA (420030064).
	Allegheny, PA (420030116)	Beaver, PA (420070014)	Milwaukee, WI (550790043).	
New Jersey	Lancaster, PA (420710007).			
New York	St Clair, MI (261470005)	Wayne, MI (261630016)	Wayne, MI (261630019)	Wayne, MI (261630033).
	Cuyahoga, OH (390350060)	Lancaster, PA (420710007).		
North Carolina	Lancaster, PA (420710007).			
Ohio	Jefferson, AL (10730023)	Cook, IL (170311016)	Madison, IL (171191007)	Marion, IN (180970043).
	Marion, IN (180970066)	Marion, IN (180970081)	St Clair, MI (261470005)	Wayne, MI (261630015)
	Wayne, MI (261630016)	Wayne, MI (261630019)	Wayne, MI (261630033)	Allegheny, PA (420030064).
	Allegheny, PA (420030093)	Allegheny, PA (420030116)	Beaver, PA (420070014)	Lancaster, PA (420710007).
	Brooke, WV (540090011)	Milwaukee, WI (550790043).		
Pennsylvania	Jefferson, AL (10730023)	Cook, IL (170311016)	Madison, IL (171191007)	Marion, IN (180970043).
	Marion, IN (180970066)	Marion, IN (180970081)	St Clair, MI (261470005)	Wayne, MI (261630015).
	Wayne, MI (261630016)	Wayne, MI (261630019)	Wayne, MI (261630033)	Cuyahoga, OH (390350038).
	Cuyahoga, OH (390350060)	Brooke, WV (540090011)	Milwaukee, WI (550790043).	
Tennessee	Jefferson, AL (10730023)	Madison, IL (171191007)	Marion, IN (180970043)	Marion, IN (180970066).
	Marion, IN (180970081)	St Clair, MI (261470005)	Wayne, MI (261630015)	Wayne, MI (261630033).
	Cuyahoga, OH (390350038)	Allegheny, PA (420030116).		
Texas	Madison, IL (171191007).			
Virginia	Lancaster, PA (420710007).			
West Virginia	Jefferson, AL (10730023)	Cook, IL (170311016)	Madison, IL (171191007)	Marion, IN (180970043).
	Marion, IN (180970066)	Marion, IN (180970081)	St Clair, MI (261470005)	Wayne, MI (261630015).
	Wayne, MI (261630016)	Wayne, MI (261630019)	Wayne, MI (261630033)	Cuyahoga, OH (390350038).
	Cuyahoga, OH (390350060)	Allegheny, PA (420030064)	Allegheny, PA (420030093)	Allegheny, PA (420030116).
	Beaver, PA (420070014)	Lancaster, PA (420710007)	Milwaukee, WI (550790043).	
Wisconsin	Cook, IL (170311016)	Wayne, MI (261630019)	Wayne, MI (261630033).	

TABLE V.D–6—UPWIND STATE TO DOWNWIND MAINTENANCE SITE "LINKAGES" FOR 24-HOUR $PM_{2.5}$

Upwind state	Downwind receptor sites			
Alabama	Washtenaw, MI (261610008)	Butler, OH (390170003)	Montgomery, OH (391130032).	
Georgia	Jefferson, AL (10732003).			
Illinois	Lake, IN (180890022)	Lake, IN (180890026)	Washtenaw, MI (261610008)	Butler, OH (390170003).
	Cuyahoga, OH (390350045)	Cuyahoga, OH (390350065)	Hamilton, OH (390618001)	Jefferson, OH (390811001).
	Montgomery, OH (391130032).	Allegheny, PA (420031008)	Allegheny, PA (420031301)	Allegheny, PA (420033007).
	York, PA (421330008)	Milwaukee, WI (550790010)	Milwaukee, WI (550790026).	
Indiana	Jefferson, AL (10732003)	Cook, IL (170310052)	Cook, IL (170312001)	Cook, IL (170313301).
	Cook, IL (170316005)	Madison, IL (171190023)	Washtenaw, MI (261610008)	Butler, OH (390170003).
	Cuyahoga, OH (390350045)	Cuyahoga, OH (390350065)	Hamilton, OH (390618001)	Jefferson, OH (390811001).
	Montgomery, OH (391130032).	Allegheny, PA (420031008)	Allegheny, PA (420031301)	Allegheny, PA (420033007).
	York, PA (421330008)	Milwaukee, WI (550790010)	Milwaukee, WI (550790026).	
Iowa	Cook, IL (170310052)	Cook, IL (170312001)	Cook, IL (170313301)	Cook, IL (170316005).
	Madison, IL (171190023)	Lake, IN (180890022)	Lake, IN (180890026)	Milwaukee, WI (550790010).
	Milwaukee, WI (550790026).			
Kansas	Cook, IL (170310052)	Cook, IL (170316005)	Milwaukee, WI (550790010)	Milwaukee, WI (550790026).
Kentucky	Jefferson, AL (10732003)	Cook, IL (170310052)	Cook, IL (170312001)	Cook, IL (170313301).
	Cook, IL (170316005)	Madison, IL (171190023)	Lake, IN (180890022)	Lake, IN (180890026).
	Washtenaw, MI (261610008)	Butler, OH (390170003)	Cuyahoga, OH (390350045)	Cuyahoga, OH (390350065).
	Hamilton, OH (390618001)	Jefferson, OH (390811001)	Montgomery, OH (391130032).	Allegheny, PA (420031008).
	Allegheny, PA (420031301)	Allegheny, PA (420033007)	York, PA (421330008)	Milwaukee, WI (550790010).
	Milwaukee, WI (550790026).			

TABLE V.D–6—UPWIND STATE TO DOWNWIND MAINTENANCE SITE "LINKAGES" FOR 24-HOUR $PM_{2.5}$—Continued

Maryland	York, PA (421330008).			
Michigan	Cook, IL (170310052)	Cook, IL (170312001)	Cook, IL (170313301)	Cook, IL (170316005).
	Madison, IL (171190023)	Lake, IN (180890022)	Lake, IN (180890026)	Butler, OH (390170003).
	Cuyahoga, OH (390350045)	Cuyahoga, OH (390350065)	Hamilton, OH (390618001)	Jefferson, OH (390811001).
	Montgomery, OH (391130032).	Allegheny, PA (420031008)	Allegheny, PA (420031301)	Allegheny, PA (420033007).
	York, PA (421330008)	Milwaukee, WI (550790010)	Milwaukee, WI (550790026).	
Minnesota	Milwaukee, WI (550790010)	Milwaukee, WI (550790026).		
Missouri	Cook, IL (170310052)	Cook, IL (170312001)	Cook, IL (170313301)	Cook, IL (170316005).
	Madison, IL (171190023)	Lake, IN (180890022)	Lake, IN (180890026)	Washtenaw, MI (261610008).
	Butler, OH (390170003)	Hamilton, OH (390618001)	Montgomery, OH (391130032).	Allegheny, PA (420031008).
	Milwaukee, WI (550790010)	Milwaukee, WI (550790026).		
Nebraska	Milwaukee, WI (550790010)	Milwaukee, WI (550790026).		
New Jersey	York, PA (421330008).			
New York	Washtenaw, MI (261610008)	Cuyahoga, OH (390350045)	Cuyahoga, OH (390350065)	York, PA (421330008).
North Carolina	York, PA (421330008).			
Ohio	Jefferson, AL (10732003)	Cook, IL (170310052)	Cook, IL (170312001)	Cook, IL (170313301).
	Cook, IL (170316005)	Madison, IL (171190023)	Lake, IN (180890022)	Lake, IN (180890026).
	Washtenaw, MI (261610008)	Allegheny, PA (420031008)	Allegheny, PA (420031301)	Allegheny, PA (420033007).
	York, PA (421330008)	Milwaukee, WI (550790010)	Milwaukee, WI (550790026).	
Pennsylvania	Jefferson, AL (10732003)	Cook, IL (170310052)	Cook, IL (170312001)	Cook, IL (170313301).
	Madison, IL (171190023)	Lake, IN (180890022)	Lake, IN (180890026)	Washtenaw, MI (261610008).
	Butler, OH (390170003)	Cuyahoga, OH (390350045)	Cuyahoga, OH (390350065)	Hamilton, OH (390618001).
	Jefferson, OH (390811001)	Montgomery, OH (391130032).	Milwaukee, WI (550790010)	Milwaukee, WI (550790026).
Tennessee	Jefferson, AL (10732003)	Madison, IL (171190023)	Washtenaw, MI (261610008)	Butler, OH (390170003).
	Cuyahoga, OH (390350065)	Hamilton, OH (390618001)	Montgomery, OH (391130032).	
Virginia	York, PA (421330008).			
West Virginia	Jefferson, AL (10732003)	Cook, IL (170310052)	Cook, IL (170312001)	Cook, IL (170313301).
	Madison, IL (171190023)	Lake, IN (180890022)	Lake, IN (180890026)	Washtenaw, MI (261610008).
	Butler, OH (390170003)	Cuyahoga, OH (390350045)	Cuyahoga, OH (390350065)	Hamilton, OH (390618001).
	Jefferson, OH (390811001)	Montgomery, OH (391130032).	Allegheny, PA (420031008)	Allegheny, PA (420031301).
	Allegheny, PA (420033007)	York, PA (421330008)	Milwaukee, WI (550790010).	
Wisconsin	Cook, IL (170310052)	Cook, IL (170312001)	Cook, IL (170313301)	Cook, IL (170316005).
	Lake, IN (180890022)	Lake, IN (180890026).		

b. Estimated Interstate Contributions to 8-Hour Ozone

In this section, we present the interstate contributions from emissions in upwind states to downwind nonattainment and maintenance sites for the ozone NAAQS. As described previously in section V.D.1, states which contribute 0.8 ppb or more to 8-hour ozone nonattainment or maintenance in another state are identified as states with contributions to downwind attainment and maintenance sites large enough to warrant further analysis.

We calculated each state's contribution to ozone at each of the 4 monitoring sites that are projected to be nonattainment and each of 6 [35] sites that are projected to have maintenance problems for the 8-hour ozone NAAQS in the 2012 base case. A detailed description of the calculations can be found in the Air Quality Modeling Final Rule TSD. The largest contribution from each state to 8-hour ozone nonattainment in downwind sites is provided in Table V.D–7. The largest contribution from each state to 8-hour ozone maintenance in downwind sites is also provided in Table V.D.2–7. The contributions from each state to all projected 2012 nonattainment and maintenance sites for the 8-hour ozone NAAQS are provided in the Air Quality Modeling Final Rule TSD.

TABLE V.D–7—LARGEST CONTRIBUTION TO DOWNWIND 8-HOUR OZONE NONATTAINMENT AND MAINTENANCE FOR EACH OF 37 STATES

Upwind state	Largest downwind contribution to nonattainment for ozone (ppb)	Largest downwind contribution to maintenance for ozone (ppb)
Alabama	4.0	2.8
Arkansas	2.1	2.0

[35] There are 6 additional sites with projected 2012 nonattainment or maintenance (Harris Co., Texas sites 482010024, 482010062, 482010066, 482011015, 482011035, and 482011039) for which there are less than 5 days with 8-hour ozone predictions of at least 70 ppb. Thus, we did not calculate contributions for these 6 sites.

TABLE V.D–7—LARGEST CONTRIBUTION TO DOWNWIND 8-HOUR OZONE NONATTAINMENT AND MAINTENANCE FOR EACH OF 37 STATES—Continued

Upwind state	Largest downwind contribution to nonattainment for ozone (ppb)	Largest downwind contribution to maintenance for ozone (ppb)
Connecticut	0.0	0.2
Delaware	0.0	0.6
Florida	0.5	3.6
Georgia	1.6	2.8
Illinois	1.9	26.8
Indiana	1.3	9.4
Iowa	0.6	0.9
Kansas	0.5	1.0
Kentucky	1.6	1.6
Louisiana	8.0	11.1
Maine	0.0	0.0
Maryland	0.0	2.7
Massachusetts	0.0	0.6
Michigan	0.0	0.9
Minnesota	0.3	0.2
Mississippi	4.0	3.3
Missouri	1.1	4.8
Nebraska	0.2	0.2
New Hampshire	0.0	0.1
New Jersey	0.0	11.5
New York	0.0	18.8
North Carolina	0.5	1.3
North Dakota	0.2	0.1
Ohio	0.1	3.2
Oklahoma	0.3	2.8
Pennsylvania	0.1	8.2
Rhode Island	0.0	0.0
South Carolina	0.4	0.9
South Dakota	0.1	0.1
Tennessee	2.2	1.1
Texas	3.9	1.9
Vermont	0.0	0.0
Virginia	0.2	8.2
West Virginia	0.0	2.8
Wisconsin	0.2	2.2

Based on the state-by-state contribution analysis, there are 11 states that contribute 0.8 ppb or more to downwind 8-hour ozone nonattainment. These states are: Alabama, Arkansas, Georgia, Illinois, Indiana, Kentucky, Louisiana, Mississippi, Missouri, Tennessee, and Texas.[36] In Table V.D–8, we provide a list of the downwind nonattainment counties to which each upwind state contributes 0.8 ppb or more (*i.e.,* the upwind state to downwind nonattainment ''linkages'').

There are 26 states [37] which contribute 0.8 ppb or more to downwind 8-hour ozone maintenance. These states are: Alabama, Arkansas, Florida, Georgia, Illinois, Indiana, Iowa, Kansas, Kentucky, Louisiana, Maryland, Michigan, Mississippi, Missouri, New Jersey, New York, North Carolina, Ohio, Oklahoma, Pennsylvania, South Carolina, Tennessee, Texas, Virginia, West Virginia, and Wisconsin.[38] In Table V.D.2–9, we provide a list of the downwind nonattainment counties to which each upwind state contributes 0.8 ppb or more (*i.e.,* the upwind state to downwind nonattainment ''linkages'').

[36] As discussed in section III, EPA is issuing a supplemental notice of proposed rulemaking to provide an opportunity for public comment on our conclusion that emissions from Iowa, Kansas, Michigan, Missouri, Oklahoma, and Wisconsin significantly contribute to nonattainment or interfere with maintenance of the 1997 ozone NAAQS in other states.

[37] As in the proposal, EPA has combined the contributions from Maryland and the District of Columbia as a single entity in our contribution analysis for the final rule. EPA believes that this is a fair representation of emissions for transport analysis because of the small size of the District of Columbia and its close proximity to Maryland. However, the District of Columbia is not included in the Transport Rule due to the significant contribution analysis findings in section VI.D.

[38] As discussed in section III, EPA is issuing a supplemental notice of proposed rulemaking to provide an opportunity for public comment on our conclusion that emissions from Iowa, Kansas, Michigan, Missouri, Oklahoma, and Wisconsin significantly contribute to nonattainment or interfere with maintenance of the 1997 ozone NAAQS in other states.

TABLE V.D–8—UPWIND STATE TO DOWNWIND NONATTAINMENT "LINKAGES" FOR 8-HOUR OZONE

Upwind state	Downwind receptor sites			
Alabama	East Baton Rouge, LA (220330003).	Brazoria, TX (480391004)	Harris, TX (482010051)	Harris, TX (482010055).
Arkansas	East Baton Rouge, LA (220330003).	Brazoria, TX (480391004).		
Georgia	East Baton Rouge, LA (220330003).	Brazoria, TX (480391004)	Harris, TX (482010051)	Harris, TX (482010055).
Illinois	Brazoria, TX (480391004)	Harris, TX (482010051)	Harris, TX (482010055).	
Indiana	Brazoria, TX (480391004)	Harris, TX (482010051)	Harris, TX (482010055).	
Kentucky	Brazoria, TX (480391004)	Harris, TX (482010051)	Harris, TX (482010055).	
Louisiana	Brazoria, TX (480391004)	Harris, TX (482010051)	Harris, TX (482010055).	
Mississippi	East Baton Rouge, LA (220330003).	Brazoria, TX (480391004)	Harris, TX (482010051)	Harris, TX (482010055).
Missouri	Brazoria, TX (480391004)	Harris, TX (482010051)	Harris, TX (482010055).	
Tennessee	East Baton Rouge, LA (220330003).	Brazoria, TX (480391004)	Harris, TX (482010051)	Harris, TX (482010055).
Texas	East Baton Rouge, LA (220330003).			

TABLE V.D–9—UPWIND STATE TO DOWNWIND MAINTENANCE "LINKAGES" FOR 8-HOUR OZONE

Upwind state	Downwind receptor sites			
Alabama	Harris, TX (482010029)	Harris, TX (482011050).		
Arkansas	Allegan, MI (260050003).			
Florida	Harris, TX (482010029)	Harris, TX (482011050).		
Georgia	Harris, TX (482010029)	Harris, TX (482011050).		
Illinois	Fairfield, CT (90011123)	Allegan, MI (260050003)	Harris, TX (482011050).	
Indiana	Fairfield, CT (90011123)	New Haven, CT (90093002)	Harford, MD (240251001)	Allegan, MI (260050003).
Iowa	Allegan, MI (260050003).			
Kansas	Allegan, MI (260050003).			
Kentucky	Fairfield, CT (90011123)	New Haven, CT (90093002)	Harford, MD (240251001)	Harris, TX (482011050).
Louisiana	Harris, TX (482010029)	Harris, TX (482011050).		
Maryland	Fairfield, CT (90011123)	New Haven, CT (90093002).		
Michigan	Harford, MD (240251001).			
Mississippi	Harris, TX (482010029)	Harris, TX (482011050).		
Missouri	Allegan, MI (260050003).			
New Jersey	Fairfield, CT (90011123)	New Haven, CT (90093002).		
New York	Fairfield, CT (90011123)	New Haven, CT (90093002)	Harford, MD (240251001).	
North Carolina	New Haven, CT (90093002)	Harford, MD (240251001).		
Ohio	Fairfield, CT (90011123)	New Haven, CT (90093002)	Harford, MD (240251001).	
Oklahoma	Allegan, MI (260050003).			
Pennsylvania	Fairfield, CT (90011123)	New Haven, CT (90093002)	Harford, MD (240251001).	
South Carolina	Harris, TX (482010029).			
Tennessee	Fairfield, CT (90011123)	Harford, MD (240251001)	Harris, TX (482011050).	
Texas	Allegan, MI (260050003).			
Virginia	Fairfield, CT (90011123)	New Haven, CT (90093002)	Harford, MD (240251001).	
West Virginia	Fairfield, CT (90011123)	New Haven, CT (90093002)	Harford, MD (240251001).	
Wisconsin	Allegan, MI (260050003).			

VI. Quantification of State Emission Reductions Required

A. Cost and Air Quality Structure for Defining Reductions

1. Summary

Section V, above, describes EPA's approach to identifying upwind states with air quality contributions that meet or exceed the air quality thresholds discussed therein for each of the NAAQS addressed in this rule. A state is covered by the Transport Rule if its contributions meet or exceed one of those air quality thresholds and the Agency identifies, using the cost- and air quality-based approach described below, emissions within the state that constitute the state's significant contribution to nonattainment and interference with maintenance with respect to the 1997 ozone, 1997 $PM_{2.5}$ or 2006 $PM_{2.5}$ NAAQS.

In this section, EPA explains its final cost- and air quality-based approach to quantify the amount of emissions that represent significant contribution to nonattainment and interference with maintenance for each state. EPA then applies that approach for the three different NAAQS being addressed in this rule: The 1997 ozone NAAQS, the 1997 annual $PM_{2.5}$ NAAQS and the 2006 24-hour $PM_{2.5}$ NAAQS. EPA believes that the methodology finalized could also be used to address transport concerns under other NAAQS, including future revisions to the ozone and $PM_{2.5}$ NAAQS.

EPA applies the methodology described herein to fully quantify the emissions that constitute each covered state's significant contribution to nonattainment and interference with maintenance with respect to the 1997 annual $PM_{2.5}$ and the 2006 24-hour $PM_{2.5}$ NAAQS. The FIPs with respect to the annual and 24-hour $PM_{2.5}$ NAAQS that are finalized in this action ensure that all such emissions are prohibited. Each such FIP thus fully satisfies the requirements of 110(a)(2)(D)(i)(I) with

respect to the annual and/or 24-hour $PM_{2.5}$ NAAQS for the covered state.

EPA also applies the methodology to quantify significant contribution to nonattainment and interference with maintenance with respect to the 1997 ozone NAAQS. However, we have not been able to fully quantify such emissions for all covered states. In this action, EPA fully quantifies the significant contribution to nonattainment and interference with maintenance for 15 states. We finalize FIPs with respect to the 1997 ozone standards for 10 of these 15 states (Florida, Maryland, New Jersey, New York, North Carolina, Ohio, Pennsylvania, South Carolina, Virginia, and West Virginia). We are also publishing a supplemental notice of rulemaking to take comment on whether FIPs should be finalized for the remaining 5 states (Iowa, Kansas, Michigan, Oklahoma, and Wisconsin). The FIPs for these 10 states (and the FIPs for the remaining 5 states, if finalized) fully satisfy the requirements of 110(a)(2)(D)(i)(I) with respect to the 1997 ozone NAAQS for the covered state.

In addition, we apply the methodology described herein to quantify, for 11 additional states, ozone-season NO_X emission reductions that are necessary but may not be sufficient to eliminate all significant contribution to nonattainment and interference with maintenance in other states. We finalize FIPs with respect to the 1997 ozone standards for 10 of these 11 states (Alabama, Arkansas, Georgia, Illinois, Indiana, Kentucky, Louisiana, Mississippi, Tennessee, and Texas). We are also publishing a supplemental notice of rulemaking to take comment on whether FIPs should be finalized for the remaining state (Missouri). The FIPs for these 10 states (and the FIP for the remaining state, if finalized) make measurable progress toward satisfying the requirements of 110(a)(2)(D)(i)(I) with respect to the 1997 ozone NAAQS in each covered state. To the extent that significant contribution to nonattainment and interference with maintenance is not entirely eliminated for the 1997 ozone NAAQS through today's action, EPA will address these instances in a future rulemaking. This is further explained in section VI.D.

With respect to the 1997 annual $PM_{2.5}$ NAAQS, this rule finds that 18 states have SO_2 and NO_X emission reduction responsibilities. EPA also finds that 21 states have SO_2 and NO_X emission reduction responsibilities with respect to the 2006 24-hour $PM_{2.5}$ NAAQS. There are a total of 23 states that have SO_2 and NO_X emission reduction responsibilities for one or both of the above $PM_{2.5}$ NAAQS. We apply the methodology to quantify emission reductions that these states must achieve to eliminate the state's significant contribution to nonattainment and interference with maintenance. The states are listed in Table III–1 in section III of this preamble.

This rule will prohibit all significant contribution to nonattainment and interference with maintenance with respect to the annual and 24-hour $PM_{2.5}$. In addition, it will resolve air quality issues at most nonattainment and maintenance receptors identified by EPA. EPA projects that unresolved nonattainment and maintenance issues will remain in only a few downwind states after promulgation and implementation of the Transport Rule. For the annual $PM_{2.5}$ standard, EPA projects that this rule will help assure that all areas in the east fully resolve their nonattainment and maintenance concerns. This rule will also help a number of areas achieve the standard earlier than they may have otherwise. For the 2006 24-hour $PM_{2.5}$ NAAQS, one area is projected to remain in nonattainment (Liberty-Clairton) and three areas are projected to have remaining maintenance concerns after imposition of the Transport Rule (Chicago,[39] Detroit, and Lancaster County).[40]

The methodology provides similar assistance for ozone, assuring upwind reductions that will assist downwind states in controlling ozone pollution. It reduces ozone concentration levels in 2012 and helps assure that all but two downwind areas fully resolve their nonattainment and maintenance problems with the 1997 ozone NAAQS by 2014. While Houston is projected to still face nonattainment and Baton Rouge is projected to still face maintenance concerns with the 1997 ozone NAAQS, the Transport Rule improves air quality in these two areas and provides both health benefits and assistance for these local areas in meeting the NAAQS requirements. For reasons explained below, EPA will conduct further analysis in a subsequent transport-related rulemaking to determine whether further upwind state reductions are warranted to assist attainment and maintenance of the ozone NAAQS in Houston and Baton Rouge areas.

When EPA proposed this air-quality and cost-based multi-factor approach to identify emissions that constitute significant contribution to nonattainment and interference with maintenance from upwind states with respect to the 1997 ozone, annual $PM_{2.5}$, and 2006 24-hour $PM_{2.5}$ NAAQS, the Agency indicated that the approach was designed to be applicable to both current and potential future ozone and $PM_{2.5}$ NAAQS (75 FR 45214). EPA believes that the final Transport Rule demonstrates the value of this approach for addressing the role of interstate transport of air pollution in communities' ability to comply with current and future NAAQS. EPA believes that the Transport Rule's approach of using air-quality thresholds to determine upwind-to-downwind-state linkages and using the cost- and air quality-based multi-factor approach to quantify significant contribution to nonattainment and interference with maintenance (*i.e.,* to determine the specific amount of emissions that each upwind state must reduce) could serve as a precedent for quantifying upwind state emission reduction responsibilities with respect to potential future NAAQS.

One commenter suggested that the rule could set a flawed precedent for future transport analyses and remedies, as it does not fully eliminate the prohibited emissions in every upwind state. EPA disagrees with this characterization of the Transport Rule. EPA notes that the partial determination of significant contribution to nonattainment and interference with maintenance for certain upwind states in the Transport Rule with respect to the ozone NAAQS is not a function of the multi-factor approach itself, but is instead a function of its limited application in this rulemaking to identify emission reductions from a single source category (EGUs). In fact, the Transport Rule's approach itself allowed EPA to determine for which upwind states we have identified all emissions that constitute significant contribution to nonattainment and interference with maintenance, and for which upwind states we have identified emissions that are necessary but may not be sufficient to eliminate the prohibited emissions. As EPA explained at proposal, developing the additional information needed to consider NO_X emissions from non-EGU source categories in order to fully quantify upwind state responsibility with respect to the 1997 ozone NAAQS would

[39] This area is not currently designated as nonattainment for the 24-hour $PM_{2.5}$ standard. EPA is portraying the receptors and counties in this area as a single 24-hour maintenance area based on the annual $PM_{2.5}$ nonattainment designation of Chicago-Gary-Lake County, IL-IN.

[40] In the Transport Rule proposal, EPA noted that the Liberty-Clairton receptor in Allegheny county was significantly impacted by local emissions from a sizeable coke production facility and other nearby sources (75 FR 45281).

substantially delay promulgation of the Transport Rule. EPA explained that we do not believe that effort should delay the emission reductions and large health benefits this final rule will deliver (75 FR 45213). EPA further explained that we believe it is likely that the Agency can provide the greatest assistance to states in addressing transported pollution by issuing a separate (subsequent) rule to address additional reductions that may be necessary to fully eliminate upwind state responsibility with respect to the 1997 ozone NAAQS (75 FR 45288). Thus, EPA decided to promulgate the Transport Rule as quickly as possible. EPA anticipates that application of this air-quality and cost-based multi-factor approach to a broader set of source categories in a subsequent rulemaking will identify any remaining prohibited emissions in the upwind states for which the Transport Rule may not fully eliminate those emissions with respect to the 1997 ozone NAAQS.

2. Background

After using air quality analysis to identify upwind states that are ''linked'' to downwind air quality monitoring sites with nonattainment and maintenance problems through contribution of at least one percent of the relevant NAAQS, EPA quantifies the portion of each state's contribution that constitutes its ''significant contribution'' or ''interference with maintenance.''

This section describes the methodology developed by EPA for this analysis and then explains how that methodology is applied to measure significant contribution to nonattainment and interference with maintenance with respect to the NAAQS of concern. For this portion of the analysis, EPA expands upon the methodology used in the NO_X SIP Call and CAIR but modifies it in important respects. In the NO_X SIP Call and CAIR, EPA's methodology defined significant contribution as those emissions that could be removed with the use of ''highly cost effective'' controls. In the Transport Rule, rather than relying solely on an analysis of what constitutes ''highly cost effective'' controls, EPA relies on an analysis that accounts for both cost and air quality improvement to identify the portion of a state's contribution that constitutes its significant contribution to nonattainment and interference with maintenance. Furthermore, in response to the Court's opinion in *North Carolina,* EPA has developed an approach which gives independent meaning to the ''interfere with maintenance'' prong of section 110(a)(2)(D)(i)(I).

The methodology takes into account both the D.C. Circuit Court's determination that EPA may consider cost when measuring significant contribution, *Michigan,* 213 F.3d at 679, and its rejection of the manner in which cost was used in the CAIR analysis, *North Carolina,* 531 F.3d at 917. It also recognizes that the Court accepted—but did not require—EPA's use of a single, uniform cost threshold to measure significant contribution. *Michigan,* 213 F.3d at 679.

As EPA discussed at length in the Transport Rule proposal, using both air quality and cost factors allows EPA to consider the full range of circumstances and state-specific factors that affect the relationship between upwind emissions and downwind nonattainment and maintenance problems (75 FR 45271). For example, considering cost takes into account the extent to which existing plants are already controlled as well as the potential for, and relative difficulty of, additional emission reductions. Therefore, EPA believes that it is appropriate to consider both cost and air quality metrics when quantifying each state's significant contribution.

This methodology is consistent with the statutory mandate in section 110(a)(2)(D)(i)(I) which requires upwind states to prohibit emissions that significantly contribute to nonattainment or interference with maintenance in another state. As discussed in more detail in the proposal, interpreting significant contribution to nonattainment and interference with maintenance inherently involves a decision on how much emissions control responsibility should be assigned to upwind states, and how much responsibility should be left to downwind states. EPA's methodology is intended to ''assign a substantial but reasonable amount of responsibility to upwind states. * * *to control their emissions'' (75 FR 45272). EPA believes that upwind states contributing to downwind state air quality degradation should bear substantial responsibility to control their emissions because of the plain language of the good neighbor provision, the health risks and control cost impacts that upwind emissions cause in the downwind state, and the cumulative impact in the downwind state of emissions from multiple upwind states, and the importance of achieving attainment in downwind states as expeditiously as practicable but no later than specific deadlines as required by the Act. EPA's approach does not shift the responsibility for achieving or maintaining the NAAQS to the upwind state. *See* 75 FR 45272.

The methodology defines each state's significant contribution to nonattainment and interference with maintenance as the emission reductions available at a particular cost threshold in a specific upwind state which effectively address nonattainment and maintenance of the relevant NAAQS in the linked downwind states of concern. Unlike the NO_X SIP Call and CAIR, where EPA's significant contribution analysis had a regional focus, the methodology used in the Transport Rule focuses on state-specific factors. The methodology uses a multi-step process to analyze costs and air quality impacts, identify appropriate cost thresholds, quantify reductions available from EGUs in each state at those thresholds, and consider the impact of variability in EGU operations. There are four steps to this methodology: (1) Identification of each state's emission reductions available at ascending costs per ton as appropriate; (2) assessment of those upwind emission reductions' downwind air quality impacts; (3) identification of upwind ''cost thresholds'' delivering effective emission reductions and downwind air quality improvement; and (4) enshrinement of the upwind emission reductions available at those cost thresholds in state budgets.

In step one, EPA identifies what emission reductions are available at various cost thresholds, quantifying emission reductions that would occur within each state at ascending costs per ton of emission reductions. In other words, EPA determined for specific cost per ton thresholds, the emission reductions that would be achieved in a state if all EGUs greater than 25 MW in that state used all emission controls and emission reduction measures available at that cost threshold. For purposes of this discussion, we refer to these as ''cost curves.''

For this final rule, EPA used updated IPM modeling to conduct a similar cost curve analysis as conducted in the Transport Rule proposal (75 FR 45275). In the proposal, the cost curves only reflected escalating cost for one pollutant while the other pollutant cost was held constant at base case levels (*i.e.,* $0/ton). However, EPA improved the costing analysis for the final rule by identifying upwind emission reductions available as costs were imposed on both SO_2 and NO_X simultaneously for states linked to downwind states on the basis of the $PM_{2.5}$ NAAQS. In other words, the cost curves in the proposal depicted state level emissions when only one pollutant was priced (*i.e.,* NO_X at $500/

ton). Separate cost curves were done for each pollutant. For the final rule, EPA conducted some preliminary cost curve analysis for identifying NO_X thresholds in this manner. However, for the final cost curve analysis, EPA relied on cost curves that reflected state emissions when pollutants were priced simultaneously (*e.g.,* NO_X at $500/ton and SO_2 at $1,600/ton). For reasons described in section VI.B, EPA was able to conduct this type of analysis because the preliminary cost curves specific to annual and ozone-season NO_X suggested little flexibility in adjusting the $500/ton cost thresholds imposed for each. Therefore, EPA was able to hold the cost threshold constant at $500/ton for these pollutants in its examination of SO_2 at various cost thresholds. EPA believes this approach to cost analysis is a better simulation of the Transport Rule's likely impact on covered sources. Under the final Transport Rule, covered sources in states regulated for $PM_{2.5}$ must address compliance requirements for SO_2 and NO_X emissions simultaneously, and this refined approach to cost curve analysis and subsequent air quality analysis better reflects this reality. Section VI.B of this preamble describes the costing analysis in further detail. Also, for more detail on the development of the cost curves, *see* ''Significant Contribution and State Emission Budgets Final Rule TSD'' in the docket for this rule.

Although the cost curves presented in this rule only include EGU reductions, EPA also assessed the cost of SO_2 and NO_X emission reductions available for source categories other than EGUs in the proposed rulemaking. This preliminary assessment in the rule proposal suggested that there likely would be very large emission reductions available from EGUs before costs reach the point for which non-EGU sources have available reductions (75 FR 45272). EPA revisited these non-EGU reduction cost levels in this final rulemaking and verified that there are little or no reductions available from non-EGUs at costs lower than the thresholds that EPA has chosen ($500/ton for NO_X, $2,300/ton for SO_2).

Further details on EPA's application of cost curves are provided below, in section VI.B.

In step two, EPA uses an air quality assessment tool to estimate the impact that the combined reductions available from upwind contributing states and the downwind receptor state at different cost-per-ton levels would have on air quality at downwind monitoring sites projected to have nonattainment and/or maintenance problems.[41] While less rigorous than the air quality models used for attainment demonstrations, EPA believes this air quality assessment tool (which has been refined since proposal) is acceptable for assessing the impact of numerous options for upwind emission reductions in the process of defining an upwind state's significant contribution to nonattainment and interference with maintenance. It allows the Agency to anticipate specific air quality impacts of many more potential emission reduction scenarios pertinent to the relevant NAAQS than time- and resource-intensive comprehensive air quality modeling would permit.

Further details on EPA's application of step two in this methodology are provided below, in section VI.C.

In step three, EPA examines cost and air quality information to identify ''significant cost thresholds.'' EPA considered a significant cost threshold to be a point along the cost curves where a noticeable change occurred in downwind air quality, such as a point where large upwind emission reductions become available because a certain type of emissions control strategy becomes cost-effective.[42]

This methodology allows EPA, where appropriate, to define multiple cost thresholds that vary for a particular pollutant for different upwind states. As explained in the Transport Rule proposal, EPA does not believe it is required to utilize multiple cost thresholds to regulate upwind emissions for purposes of the mandate in CAA section 110(a)(2)(D), but EPA's multi-factor methodology developed for the Transport Rule to define significant contribution to nonattainment and interference with maintenance allows the Agency to consider whether a single cost threshold or multiple cost thresholds are appropriate for meeting the requirements of CAA section 110(a)(2)(D) relevant to a particular NAAQS (75 FR 45274).

[41] As is discussed in the RIA, EPA also used the CAMx model to perform air quality analysis of its proposed remedy to address significant contribution. Results from this modeling will not exactly correspond to results from the air quality assessment tool both because the inputs to the air quality modeling are different and the sophisticated model more fully accounts for the complex air chemistry interactions. The full air quality modeling looks at the remedy, including reductions in upwind states that do not contribute as well as the impacts of the variability provisions discussed later in this section. It also provides a metric against which to evaluate the air quality assessment tool.

[42] The cost thresholds identified in this rule are specific to the section 110(a)(2)(D)(i)(I) requirements for the states and NAAQS considered in this proposal. They do not represent an agency position on the appropriateness of such cost thresholds for any other application under the Act.

In step four, EPA uses the information regarding emission reductions available in each ''linked'' upwind state at the appropriate cost threshold to form a state ''budget,'' representing the remaining emissions from covered sources for the state in an average year once significant contribution to nonattainment and interference with maintenance have been eliminated; each budget also allows for the identification of an associated variability limit. These budgets and variability limits are used to develop enforceable requirements under the final remedy. The final rule's methodology for identifying state budgets is derived directly from the cost curves and multi-factor analysis EPA uses to determine each state's significant contribution to nonattainment and interference with maintenance. State emission budgets are discussed in section VI.D and the variability limits are discussed in section V*I.E.*

B. Cost of Available Emission Reductions (Step 1)

This subsection provides more detail on the cost curves that EPA developed to assess the costs of reducing SO_2 and NO_X emissions to address transport related to ozone and $PM_{2.5}$ concentrations (described previously as Step 1). It summarizes the information from the curves and then provides EPA's interpretation of that information. EPA used IPM to develop the EGU cost curves described in this rulemaking. More information can be found regarding EPA's use of IPM for the final Transport Rule in the ''Significant Contribution and State Emission Budgets Final Rule TSD''.

The amount of emission reductions that the cost curves suggest are available at various costs are specific to the 2012 and 2014 time periods. These cost estimates factor in the time interval between rule finalization and compliance periods, existing controls already in place, and controls that could potentially come on line by the start of the compliance period. EPA notes that cost curves are a fluid concept and would vary given different compliance dates.

1. Development of Annual NO_X and Ozone-Season NO_X Cost Curves

EPA conducted preliminary cost curve analysis for annual NO_X and ozone-season NO_X in a similar manner to that used in the proposed rulemaking. That is, the impact of various cost thresholds on emissions was examined individually. For example, state level emissions were examined at cost levels for annual NO_X of $500, $1,000, and

$2,500/ton while SO_2 was held at base case levels. EPA used this approach to examine NO_X and ozone-season NO_X emission reductions available from EGUs by 2012 and 2014 at various cost levels, reaching to $2,500/ton for annual NO_X and up to $5,000/ton for ozone-season NO_X (in 2007-year dollars). Section VI.D explains why EPA analyzed the $500/ton threshold for annual and ozone-season NO_X. EPA selected two higher cost thresholds to analyze for annual and ozone-season NO_X that provided a reasonable spectrum of emission reduction opportunities from EGUs at higher cost thresholds. Specifically, EPA analyzed these two higher cost thresholds because the first ($1,000/ton) was informative in regards to the additional EGU NO_X emissions reductions available without installation of advanced controls, and the second ($2,500/ton for annual NO_X, $5,000/ton for ozone-season NO_X) was informative in regards to additional EGU reductions available at cost thresholds where advanced NO_X control retrofits are economic for some units. The cost thresholds were only applied to states with air quality contributions that meet or exceed the air quality thresholds as identified in section V.D. For both annual and ozone-season NO_X, EPA did not consider cost thresholds below $500/ton for reasons explained in section VI.D.

EPA observed in the proposal that low-cost NO_X reductions are available at upwind sources with existing pollution control equipment that may not otherwise be operated in the future without the Transport Rule. EPA believes it is appropriate to prohibit any ''linked'' upwind state from potentially increasing its emissions through a failure to operate these existing pollution controls, which could worsen downwind air quality problems. Thus, EPA reflected operation of these controls in all modeling of different cost thresholds (*i.e.,* the modeling assumes year-round operation of post-combustion NO_X controls in covered $PM_{2.5}$ states and ozone-season operation of post-combustion NO_X controls in covered ozone states).

Table VI.B–1 shows the annual NO_X emissions from EGUs at various levels of control cost per ton for 2014. Table VI.B–2 presents the cost curves for ozone-season NO_X emissions from EGUs. As discussed in section VI.D, EPA determined that $500/ton for annual and ozone NO_X was the appropriate cost threshold for this rule (although EPA plans to determine in the future whether a higher cost/ton threshold may be warranted for states contributing to nonattainment or maintenance problems with the 1997 ozone air quality standard projected to remain in two downwind areas).

TABLE VI.B–1—2014 ANNUAL NO_X EMISSIONS FROM FOSSIL-FUEL FIRED EGUS GREATER THAN 25 MW FOR EACH TRANSPORT RULE STATE AT VARIOUS COSTS PER TON

[(2007$) per ton (thousand tons)]

	Base case level	$500	$1,000	$2,500
Alabama	75	72	72	70
Georgia	48	41	41	39
Illinois	55	51	50	49
Indiana	117	108	107	100
Iowa	45	40	39	37
Kansas	32	25	25	23
Kentucky	83	83	81	78
Maryland	17	17	17	17
Michigan	64	61	61	60
Minnesota	38	30	30	30
Missouri	55	54	54	51
Nebraska	43	27	26	21
New Jersey	8	8	8	8
New York	19	19	18	18
North Carolina	46	46	46	44
Ohio	99	95	94	92
Pennsylvania	132	124	124	116
South Carolina	38	38	37	36
Tennessee	29	29	29	29
Texas	141	138	138	136
Virginia	36	35	35	28
West Virginia	64	64	64	61
Wisconsin	37	32	32	31
Total	1,321	1,236	1,229	1,174

TABLE VI.B–2—2012 OZONE-SEASON NO_X EMISSIONS FROM FOSSIL-FUEL FIRED EGUS GREATER THAN 25 MW FOR EACH TRANSPORT RULE STATE AT VARIOUS COSTS

[(2007$) per ton (thousand tons)]

	Base case level	$500	$1,000	$5,000
Alabama	34	34	34	31
Arkansas	15	15	15	14
Florida	42	27	27	24
Georgia	29	28	28	25
Illinois	21	21	21	21
Indiana	47	46	46	43
Kentucky	38	37	36	34

TABLE VI.B–2—2012 OZONE-SEASON NO_X EMISSIONS FROM FOSSIL-FUEL FIRED EGUS GREATER THAN 25 MW FOR EACH TRANSPORT RULE STATE AT VARIOUS COSTS—Continued

[(2007$) per ton (thousand tons)]

	Base case level	$500	$1,000	$5,000
Louisiana	13	13	13	13
Maryland	7	7	7	7
Mississippi	10	10	10	9
New Jersey	3	3	3	3
New York	8	8	8	8
North Carolina	23	23	23	21
Ohio	42	42	42	38
Pennsylvania	53	53	52	49
South Carolina	15	15	15	14
Tennessee	16	16	15	15
Texas	65	63	63	60
Virginia	15	15	15	13
West Virginia	26	26	26	24
Total	523	504	501	467

EPA notes that the cost curves presented here differ somewhat from the cost curves presented in the proposal. The NO_X emissions modeled at a $500/ton cost threshold for the final rule are lower than they were at proposal. In addition, the emission reductions they represent from the updated base case are not as pronounced as was found in modeling for the proposed rule. It is worth emphasizing that the lower emission reductions observed at $500/ton in this final rulemaking are due to a lower starting point in updated base case EGU NO_X emission levels (and thus do not reflect higher NO_X emissions remaining after the reductions made at the $500/ton threshold). While the base case 2012 nationwide annual EGU NO_X emissions were approximately 3 million tons in the proposal, they were only 2.1 million tons in the final rule. This approximately 33 percent reduction in base case EGU NO_X emissions in the final rule modeling relative to the proposal is due to a combination of modeling updates, including lower natural gas prices, reduced electricity demand, newly-modeled consent decrees and state rules, and updated NO_X rates to reflect 2009 emissions data. All of these factors resulted in substantially lower base case Transport Rule NO_X emissions in the final rule modeling.

2. Development of SO_2 Cost Curves

As explained in detail below in section VI.D, EPA determined that a single threshold of $500/ton for ozone-season NO_X control in the states covered for the 1997 ozone NAAQS and a single threshold of $500/ton for annual NO_X control in the states covered for the $PM_{2.5}$ NAAQS were appropriate cost thresholds for identifying upwind control under the Transport Rule. With these parameters determined, EPA was able to assess the availability of SO_2 emission reductions from EGUs at various SO_2 cost per ton thresholds with the corresponding NO_X reduction requirements simultaneously represented in the analysis.

This approach of simultaneously modeling cost levels for covered pollutants is different from the approach taken in the proposal. In the proposal, cost curves were developed and examined independently for each pollutant. For example, with the SO_2 cost curves in the proposal, the NO_X cost level was held constant at base case levels as the SO_2 cost threshold was varied from base case levels to $2,400/ton. Commenters noted that this did not accurately reflect a reality where source owners/operators view price signals for all covered pollutants simultaneously and make operation decisions accordingly. For the final rule, EPA included cost thresholds of $500/ton for annual NO_X in $PM_{2.5}$ states and $500/ton for ozone-season NO_X in ozone-season states while examining different SO_2 cost thresholds. This allows EPA to develop final cost curves for air quality analysis and budget determination that reflect EGU operation when faced with the appropriate cost thresholds on all covered pollutants. EPA believes this approach of modeling final cost curves is superior to the methodology used in the proposal because it reflects market signals for each pollutant simultaneously, as would be experienced by states and sources regulated under the Transport Rule.

In this manner, EPA examined several SO_2 cost thresholds of $500, $1,600, $2,300, $2,800, $3,300 and $10,000 per ton. EPA selected these cost thresholds for the final rule's analysis as a representative sampling of points along the SO_2 cost curve thoroughly explored at proposal. Modeling of these cost thresholds provided a spectrum of emission reduction opportunities yielding meaningful differences to consider in total costs and air quality improvements at each threshold. The proposal's more detailed analysis using smaller increments between cost thresholds outlined the general form of the sector's SO_2 emission reduction cost curve and therefore allowed EPA to use larger increments between cost thresholds for the final rule's analysis. Each of the cost thresholds examined for the final rule represents a point where there is a significant change in available controls, emission reductions, or costs and economic impacts. EPA believes analysis of these thresholds illustrate a meaningful progression of costs and air quality impacts that enabled the Agency to determine a proper threshold along this cost curve to identify significant contribution to nonattainment and interference with maintenance for this rulemaking.

The cost thresholds above $500/ton were applied starting in 2014. In all modeling, the 2012 cost per ton threshold was held constant at $500/ton as EPA believes that this cost threshold captures all emission reductions feasible by 2012 (see section VI.B.3 below for more discussion). At the higher cost levels (*e.g.,* $2,800/ton and above), the curve does not include all available reductions as they do not include non-EGU reductions. As described above for NO_X, EPA also observed at proposal that substantial low-cost SO_2 reductions are available from the operation of existing scrubbers that may not otherwise operate in the future without the

Transport Rule in place. Therefore, all of the final SO_2 cost curves assume operation of existing scrubbers in $PM_{2.5}$ states under the Transport Rule. In 2014, approximately 3 million tons of SO_2 reductions can be achieved at the $500/ton cost threshold through operation of existing controls and some fuel switching.

This final cost curve also appropriately reflects the Group 1/Group 2 distinction for states covered for $PM_{2.5}$. As discussed in more detail in section VI.D, EPA identified Group 2 states as those that were linked to states where all nonattainment and maintenance issues had been resolved at $500/ton levels. There is no longer any significant contribution to nonattainment or interference with maintenance by these seven Group 2 states at levels above $500/ton. Therefore, in the final curves, these Group 2 states' cost thresholds were held constant at $500/ton as the higher cost thresholds were applied to the remaining Group 1 states starting in 2014. For example, the modeled emissions at the $2,300 per ton cost threshold shown in Table VI.B–3 below reflect each state's emissions when Group 1 states are subjected to a $2,300 per ton SO_2 constraint and Group 2 states are subjected to a $500/ton SO_2 constraint.

Additional reductions can be achieved at the higher cost thresholds. The cost curves demonstrate that sources begin to build significant additional flue gas desulfurization (FGD) retrofits at an SO_2 cost threshold of $1,600 per ton and additional dry sorbent injection (DSI) retrofits at an SO_2 cost threshold of $2,300 per ton.

With these final cost curves in hand, EPA was able to identify the combined reductions available from upwind contributing states and the downwind state, at different cost-per-ton levels. Additionally, EPA was able to examine the economic impacts of imposing such cost constraints on power sector generation. However, this only constitutes a portion of EPA's multi-factor assessment used to determine the amount of emissions that represent significant contribution to nonattainment and interference with maintenance. As noted in the Transport Rule proposal, EPA's multi-factor assessment considered air quality and cost considerations when identifying cost thresholds (75 FR 45271). The air quality portion of the assessment is described in section VI.C of the final Transport Rule preamble.

3. Amount of Reductions That Could Be Achieved by 2012 and 2014

EPA applied escalating SO_2 cost per ton thresholds for Group 1 states to create the cost curves for 2014 and beyond. For 2012 SO_2, the cost per ton was held constant at $500/ton as the cost thresholds in 2014 and beyond were varied. The advanced pollution controls incentivized by these higher cost-per-ton levels can reasonably be installed by 2014. EPA also considered whether any of these emission reductions could be achieved prior to 2014. For the reasons that follow, EPA concluded that significant reductions could be achieved by 2012 and that it is important to require all such reductions by 2012 to ensure that they are achieved as expeditiously as practicable. SO_2 and NO_X reductions come from operating existing controls, installing combustion controls, fuel switching, and increased dispatch of lower-emitting generation which can be achieved by 2012. In general, compliance mechanisms that do not involve post-combustion control installation are feasible before 2014. For this reason, EPA believes it is appropriate to require these emissions to be removed in 2012, consistent with the Act's requirement that downwind states attain the NAAQS as expeditiously as practicable.

Therefore, all of the cost curves presented below include all feasible 2012 reductions up to a threshold of $500/ton for SO_2 and $500/ton for annual NO_X in states linked to receptors for $PM_{2.5}$, as well as $500/ton for ozone-season NO_X in states linked to receptors for ozone. These cost per ton levels do not precipitate advanced post-combustion control installation in 2012 (as EPA acknowledges that such installations are not feasible by 2012), but they do promote the compliance options outlined above. The higher cost thresholds for SO_2 Group 1 states were only applied starting in 2014. Therefore, the 2012 state level emissions in the ''$2,300 per ton threshold'' reflect a cost threshold of only $500/ton for all pollutants (the $2,300 per ton value starts in 2014 for Group 1 states' SO_2).

The table below illustrates the change in state level SO_2 emissions as the higher cost per ton thresholds are applied to Group 1 states.

TABLE VI.B–3—2014 SO_2 EMISSIONS FROM FOSSIL-FUEL-FIRED EGUS GREATER THAN 25 MW FOR EACH TRANSPORT RULE STATE AT VARIOUS COSTS PER TON

[Thousand tons] [a]

	State SO_2 group	Base case level	$500	$1,600	$2,300	$2,800	$3,300	$10,000
Alabama	2	417	201	226	213	214	236	190
Georgia	2	170	94	94	95	95	95	98
Illinois	1	138	134	130	124	117	102	36
Indiana	1	711	245	179	161	153	121	69
Iowa	1	127	112	78	75	67	45	13
Kansas	2	70	55	57	61	61	61	45
Kentucky	1	488	161	126	106	103	89	46
Maryland	1	43	32	28	28	26	24	18
Michigan	1	266	206	189	144	105	94	24
Minnesota	2	66	43	45	46	46	46	44
Missouri	1	382	212	173	166	109	84	21
Nebraska	2	72	68	70	70	70	70	66
New Jersey	1	39	7	7	7	7	6	5
New York	1	40	21	20	12	11	10	8
North Carolina	1	120	104	61	58	49	40	30
Ohio	1	832	294	175	137	123	115	65
Pennsylvania	1	507	294	164	112	107	102	75
South Carolina	2	210	93	100	103	104	104	105
Tennessee	1	284	82	63	59	59	59	24

TABLE VI.B–3—2014 SO_2 EMISSIONS FROM FOSSIL-FUEL-FIRED EGUS GREATER THAN 25 MW FOR EACH TRANSPORT RULE STATE AT VARIOUS COSTS PER TON—Continued

[Thousand tons] [a]

	State SO_2 group	Base case level	$500	$1,600	$2,300	$2,800	$3,300	$10,000
Texas	2	453	281	282	284	281	281	243
Virginia	1	65	59	51	35	33	32	16
West Virginia	1	497	157	122	76	74	72	55
Wisconsin	1	125	51	47	40	38	34	14
Total	.....	6,122	3,007	2,487	2,212	2,053	1,919	1,311
Group 1 total	.....	4,665	2,172	1,612	1,340	1,180	1,025	520
Group 2 total	.....	1,457	835	875	872	872	894	791

[a] **Note**: As described in the preamble language for this section, the escalating cost per ton figures in each column header only apply to Group 1 states in 2014 and each year thereafter. Cost per ton for Group 2 states is held constant at $500/ton for all the costing runs. In some cases, the escalating cost levels in Group 1 states affect emission levels in Group 2 states as some generation shifts between states in response to newly imposed costs.

C. Estimates of Air Quality Impacts (Step 2)

After developing cost curves to show the state-by-state cost-effective emission reductions available, EPA estimates the air quality impacts of these reductions using the air quality assessment tool coupled with full-scale air quality modeling where possible. EPA uses the air quality assessment tool to evaluate the impact on air quality for downwind nonattainment and maintenance receptors from upwind reductions in ''linked'' states. This section describes the development of the air quality assessment tool and summarizes the results of this evaluation.

1. Development of the Air Quality Assessment Tool and Air Quality Modeling Strategy

In response to comments on the methodology used for the proposed rule, EPA made significant improvements to the air quality assessment tool (AQAT) for the final Transport Rule. Furthermore, EPA relied on CAMx to model the air quality response to NO_X reductions and limited AQAT's role (relative to the Transport Rule proposal) to estimating the relative response of sulfate concentrations from SO_2 reductions. EPA did not use AQAT to address NO_X reductions in the final rule analyses. These and other changes to our approach, as described below and in the ''Significant Contribution and State Emission Budgets Final Rule TSD'', address commenter's concerns about the scientific rigor of the design and application of AQAT and commenter's recommendations to rely upon air quality modeling as part of this analysis.

For the final Transport Rule, EPA created an AQAT calibration scenario consisting of full-scale air quality modeling using CAMx of a 2014 control scenario reflecting SO_2 and NO_X emission reductions of similar stringency and from the same geography as the Transport Rule proposal. Modeling of this AQAT calibration scenario reflected all updates made to the air quality modeling platform, as described in the ''Air Quality Modeling Final Rule TSD'' found in the docket for this rulemaking. CAMx modeling of each receptor's response in this control scenario accounts for complex chemical interactions and covariation of these pollutants. Among the important atmospheric chemical interactions accounted for in CAMx is ''nitrate replacement.'' [43] Nitrate replacement occurs when SO_2 emission reductions lead to decreases in ammonium sulfate, which in turn, can result in an increase in ammonium nitrate concentrations. As described below, EPA used the CAMx modeling results for this AQAT calibration scenario together with the modeling for the 2012 base case to characterize the response of ozone, nitrate, and sulfate at each nonattainment and maintenance receptor to the mix of upwind NO_X and SO_2 emission reductions at each cost threshold.

As described in section VI.D, EPA determined that the $500/ton threshold for upwind annual and ozone-season NO_X control is appropriate for the final Transport Rule (although EPA plans to determine in the future whether a higher cost/ton threshold may be warranted for states contributing to nonattainment or maintenance problems with the 1997 ozone air quality standard projected to remain at receptors in two downwind areas [44]). Because this threshold corresponds to the NO_X control strategy modeled in the AQAT calibration scenario described above, EPA is able to rely on this CAMx air quality modeling to assess the response of ozone and nitrate concentrations due to NO_X reductions and does not estimate ozone or nitrate impacts for this final rulemaking using AQAT. Further information on the air quality modeling of this AQAT calibration scenario can be found in the Air Quality Modeling Final Rule TSD and the Significant Contribution and State Emission Budgets Final Rule TSD in the docket for this rulemaking.

In order to estimate 2014 annual and 24-hour $PM_{2.5}$ concentrations, AQAT uses the 2012 annual and seasonal contributions which quantify the contribution of SO_2 emissions in specific upwind states to sulfate concentrations at specific downwind receptors. These contributions are described in section V.D.2 and the Air Quality Modeling Final Rule TSD.

EPA utilizes CAMx modeling of the AQAT calibration scenario, described above, to ''calibrate'' the contribution factors by developing and applying linear sulfate response factors for each downwind receptor. These factors calibrate each receptor's sulfate response to varying levels of upwind SO_2 emissions. These calibration factors are based on the sulfate response modeled by CAMx due to emission changes occurring between the 2012 base case and the 2014 AQAT

[43] Observable indicators of the sensitivity of $PM_{2.5}$ nitrate to emission reductions—Part II: Sensitivity to errors in total ammonia and total nitrate of the CMAQ-predicted non-linear effect of SO_2 emission reductions. R.L. Dennis, P.K. Bhave, and R.W. Pinder. 2008. Atmospheric Environment (42):1287–1300.doi:10.1016/j.atmosenv.2007.10.036.

[44] Houston and Baton Rouge nonattainment areas.

calibration scenario. Calibration factors were constructed for the annual and 24-hour $PM_{2.5}$ AQAT.

To further allow adequate assessment of the seasonal impacts of various levels of upwind SO_2 reductions on each receptor's 24-hour $PM_{2.5}$ concentration using AQAT, EPA developed response factors for sulfate on a quarterly basis to capture important air quality differences between summer and winter emissions and concentrations. This process allowed EPA to estimate the air quality values for each season at each cost threshold, and then estimate the air quality design values.

Finally, EPA's air quality assessment accounts for the impact that this differential response in sulfate by quarter can have on the ordering of 24-hour concentrations when calculating the 98th percentile for the 24-hour standard. AQAT estimates quarterly-specific relative response factors that estimate quarterly-specific proportional change in ammonium sulfate resulting from the SO_2 emission reduction from the 2012 base case scenario to the 2014 cost threshold scenario being assessed. These quarterly relative response factors are then applied to each of the maximum 24-hour $PM_{2.5}$ concentrations for eight days per quarter per year at each receptor from the 2012 base case. This methodology improvement allows EPA to redetermine the 98th percentile day for each year and recalculate average and maximum design values for the 24-hour $PM_{2.5}$ standard.

These improvements for the final rule increase EPA's confidence that the air quality estimates provided by AQAT, now customized for this application, more accurately estimate the results of full-scale air quality modeling of the various levels of upwind SO_2 reductions considered. EPA evaluated the estimates from AQAT using an independent data set, the 2014 base case estimates from CAMx, finding that the results are unbiased with minimal differences. *See* ''Significant Contribution and State Emission Budgets Final Rule TSD'' for more details.

As such, EPA believes the revised AQAT provides an appropriate basis for assessing the air quality portion of the multi-factor methodology to define significant contribution to nonattainment and interference with maintenance.[45]

2. Utilization of AQAT To Evaluate Control Scenarios

For the final Transport Rule, EPA performed air quality analysis for each downwind annual and 24-hour $PM_{2.5}$ receptor with a nonattainment and/or maintenance problem in the 2012 base case. For each receptor, EPA quantified the sulfate reduction and resulting air quality improvement when a group of states consisting of the upwind states that are ''linked'' to the downwind receptor (as explained in section V.D) and the downwind state where the receptor is located, all made the SO_2 emission reductions that EPA identified as available at each cost threshold. EPA assumes reductions at each cost threshold from the linked upwind states as well as the downwind receptor state to assess the shared responsibility of these upwind states to address air quality at the identified receptors. Analysis of each receptor did not assume any emission reductions beyond those included in the 2014 base case from upwind states that are not ''linked'' to that specific downwind receptor (even if the state was ''linked'' to a different receptor and/or otherwise would have made emission reductions beginning in 2012 due to the Transport Rule).

EPA disagrees with comments suggesting that emission reductions, and resulting decreases in contribution, from upwind states that are not ''linked'' to a particular downwind receptor should be accounted for in the 2014 AQAT analysis of that receptor. EPA decided to assume reductions only from linked states when analyzing each receptor because EPA is performing a state-specific analysis to support a determination of the amount of each upwind state's responsibility for air quality problems at the downwind receptors that it significantly affects. If the AQAT analysis were to assume emissions reductions in other non-linked states, the AQAT analysis would then contradict the first step of our two-step approach to defining significant contribution to nonattainment and interference with maintenance. Under EPA's two-step approach, only a state that (1) contributes a threshold amount or more to a particular downwind state receptor's air quality problem, and (2) has emission reductions available at the selected cost threshold can be deemed to have responsibility to reduce its emissions to improve air quality at that downwind receptor. EPA believes that the commenters' suggested approach would not qualify as a state-specific approach for determining upwind state responsibility for downwind air quality problems.

Because EPA is relying on the CAMx estimate of nitrate concentrations from the AQAT calibration scenario, the response in nitrate to NO_X reductions at a cost threshold of $500/ton is present in each SO_2 cost threshold scenario analyzed.

EPA determines the cumulative air quality improvement that can be expected at a particular downwind receptor by multiplying each upwind state's percent SO_2 emission reduction by its calibrated receptor specific sulfate response factor and summing the sulfate, nitrate, and other $PM_{2.5}$ components (also taken from the 2014 CAMx AQAT calibration scenario).

3. Air Quality Assessment Results

The results of EPA's air quality assessment of the cost threshold scenarios focus on air quality metrics including, but not limited to, average air quality improvement at receptors with 2012 base case nonattainment and maintenance exceedances and an evaluation of estimated receptor design values against annual and 24-hour $PM_{2.5}$ standards. *See* ''Significant Contribution and State Emission Budgets Final Rule TSD'' for more details.

In EPA's air quality analysis of each downwind receptor, all air quality improvements are measured relative to the ''AQAT base case.'' This base case reflects AQAT's estimated $PM_{2.5}$ concentrations under base case 2014 SO_2 emissions. The AQAT base case itself is not used for any decision points and only serves as an appropriate starting point for comparison of air quality improvements at SO_2 cost thresholds. EPA ensures internal analytic consistency by comparing all air quality improvements at analyzed SO_2 cost thresholds to the AQAT base case.

Regarding average air quality improvement at exceeding 2012 base case receptors, EPA identified 41 receptors with nonattainment or maintenance problems in the 2012 base

[45] EPA used CAMx to conduct full air quality modeling of the final Transport Rule remedy embodying the emission reductions that EPA first selected on the basis of the multi-factor analysis using AQAT to project air quality impacts from varying levels of emission reductions analyzed. The CAMx results confirmed the relative magnitude and direction of AQAT's estimates of the outcomes for the 2012 base case nonattainment and maintenance receptors analyzed, and the AQAT estimates closely tracked CAMx-modeled concentrations at those receptors under the Transport Rule remedy. The paired AQAT-estimated and CAMx-modeled concentrations were found to be highly correlated with an R^2 value of 0.997. As a result, EPA is confident that AQAT's estimates of impacts on sulfate concentrations at the varying levels of SO_2 emission reductions analyzed provide a technically valid and sound basis for the Agency's selection of the final rule's emission reductions necessary to eliminate (or make meaningful progress toward eliminating) significant contribution and interference with maintenance for the $PM_{2.5}$ NAAQS considered in this rulemaking. Further details on the comparison of CAMx and AQAT results can be found in the Significant Contribution and State Emission Budgets Final Rule TSD.

case. EPA assessed the cumulative reduction in 24-hour $PM_{2.5}$ maximum design value at each increasing SO_2 cost threshold from the maximum design value from the AQAT base case, and averaged the reduction across the 41 receptors. The results of this assessment indicate diminishing incremental returns to 24-hour $PM_{2.5}$ maximum design value reduction as SO_2 cost threshold levels increase. EPA finds reductions in maximum design value of 4.28 μg/m³ at $500; 4.98 μg/m³ at $1,600; 5.33 μg/m³ at $2,300; 5.46 μg/m³ at $2,800; 5.60 μg/m³ at $3,300; and 6.08 μg/m³ at $10,000. These results are provided in table VI.C–1.

TABLE VI.C–1—AVERAGE 2014 AIR QUALITY IMPROVEMENT AT RECEPTORS WITH 2012 BASE CASE NONATTAINMENT AND MAINTENANCE PROBLEMS

Group 1 state SO_2 cost per ton threshold	Average air quality improvement at exceeding receptors in 2012 base case (μg/m³)
$500	4.28
$1,600	4.98
$2,300	5.33
$2,800	5.46
$3,300	5.60
$10,000	6.08

Additionally, EPA evaluated the AQAT estimated 2014 average and maximum design values for these receptors at each cost threshold against the annual and 24-hour $PM_{2.5}$ standards. EPA determined the estimated number of receptors with nonattainment or maintenance problems at $500/ton cost threshold of NO_X and each of the cost threshold scenarios assessed for SO_2. These results are provided in table VI.C–2 in terms of the number of receptors and the number of nonattainment areas containing these receptors.

TABLE VI.C–2—RECEPTORS WITH NONATTAINMENT AND/OR MAINTENANCE EXCEEDANCES OF THE ANNUAL OR 24-HOUR $PM_{2.5}$ NAAQS IN 2014

SO_2 cost threshold	Annual nonattainment		Annual nonattainment or maintenance		24-hour nonattainment		24-hour nonattainment or maintenance		Annual and 24-hour nonattainment and maintenance	
	Receptors	Areas	Receptors	Areas	Receptors	Areas	Receptors	Areas	Receptors	Areas
$500	1	1	1	1	2	2	9	6	9	6
$1,600	1	1	1	1	2	2	8	5	8	5
$2,300	0	0	1	1	1	1	6	4	6	4
$2,800	0	0	1	1	1	1	5	4	5	4
$3,300	0	0	1	1	1	1	5	4	5	4
$10,000	0	0	1	1	1	1	3	3	3	3

In the proposal, EPA evaluated whether the imposition of the rule's upwind emission reduction requirements could cause changes in operation of electric generating units in states not regulated under the proposal. EPA recognized that such changes could lead to increased emissions in those states, potentially affecting whether they would meet or exceed the 1 percent contribution thresholds used to identify linkages between upwind and downwind states. Such shifting of emissions between states may occur because of the interconnected nature of the country's energy system (including both the electricity grid as well as coal and natural gas supplies).

Using updated emissions and air quality information developed for the final rule, EPA's IPM modeling found that of the states not covered in the final rule for $PM_{2.5}$, Arkansas, Colorado, Louisiana, Montana, and Wyoming are all projected to have SO_2 emission increases above 5,000 tons in 2014 with the rule in effect. EPA analysis shows the SO_2 emission increases result from expected shifts to higher sulfur coal in these states. Using AQAT, a state-level assessment of these emission increases relative to the state specific contributions to downwind receptors (where available) indicates that projected increases in the SO_2 emissions would not increase any of these states' contributions to an amount that would meet or exceed the 0.15 μg/m³ or 0.35 μg/m³ thresholds for annual and 24-hour $PM_{2.5}$, respectively. For this reason, EPA has determined that it is not necessary to include these additional states in the Transport Rule as a result of the effects of the rule itself on SO_2 emissions in uncovered states. *See* ''Significant Contribution and State Emission Budgets Final Rule TSD'' in the docket for this rulemaking for more details.

D. Multi-Factor Analysis and Determination of State Emission Budgets

EPA used the cost, emission, and air quality information described in the previous sections to perform its multi-factor analysis. By looking at different ''cost thresholds''—places where there was a noticeable change on the cost curve because emission reductions occur—and examining the corresponding impact on air quality, EPA identified the amount of emissions that represent significant contribution to nonattainment and interference with maintenance within each state. After quantifying this amount of emissions, EPA established state ''budgets'' which represent the remaining emissions for the state in an average year (step 4).

For states covered by the rule for $PM_{2.5}$, EPA calculated annual NO_X and annual SO_2 budgets. For states covered by the rule for ozone, EPA calculated ozone-season NO_X budgets. This section explains the multi-factor assessment and how EPA used this assessment to determine state-specific budgets.

1. Multi-Factor Analysis (Step 3)

a. Overview

As described in section VI.B, EPA examined how different cost thresholds impacted emissions in states with air quality contributions that meet or exceed specific air quality thresholds, as discussed in section V.D of this preamble. Section VI.C summarizes the estimated air quality impacts in 2014 of these emission levels at downwind receptors, including estimates of their nonattainment and maintenance status (*see* ''Significant Contribution and State Emission Budgets Final Rule TSD'' for more details). From these two steps, EPA evaluated the interaction between upwind emissions at different cost levels and air quality at downwind receptors to identify ''significant cost thresholds.'' These cost thresholds are

based on air quality considerations (such as the cost at which the air quality assessment analysis projects large numbers of downwind site maintenance and nonattainment problems would be resolved) or cost criteria (such as a cost where large emissions reductions occur because a particular technology is widely implemented at that cost). EPA examined each cost threshold and then used a multi-factor assessment to determine which serve as cost thresholds that eliminate significant contribution to nonattainment and interference with maintenance for upwind states. Air quality considerations in the assessment include, for example, how much air quality improvement in downwind states results from upwind state emission reductions at different levels; whether, considering upwind emission reductions and assumed local (in-state) reductions, the downwind air quality problems would be resolved; and the components of the remaining downwind air quality problem (*e.g.,* whether it is a predominantly local or in-state problem, or whether it still contains a large upwind component). Cost considerations include, for example, how the cost per ton of emission reduction compares with the cost per ton of existing federal and state rules for the same pollutant; whether the cost per ton is consistent with the cost per ton of technologies already widely deployed (similar to the highly-cost-effective criteria used in both the NO_X SIP Call and CAIR); and what cost increase is required to achieve additional meaningful air quality improvement.

The specific cost per ton thresholds selected as a basis for identifying significant contribution to nonattainment and interference with maintenance in this rulemaking apply only to the determinations made in this rule and do not establish any precedent for future EPA actions under section 110(a)(2)(D)(i)(I) or any other section of the CAA. EPA's selection of specific cost thresholds in the context of this rulemaking relies on current analyses of the cost of available emission reductions, the pattern of interstate linkages for pollution transport, and the downwind air quality impacts specifically related to the 1997 ozone NAAQS, the 1997 annual $PM_{2.5}$ NAAQS, and the 2006 24-hour $PM_{2.5}$ NAAQS. In addition and as explained below, the selection of the threshold for ozone-season NO_X was influenced by the limited scope of this rule. Any or all of these variables used to identify specific cost thresholds are subject to change. Thus, EPA may use different cost thresholds in future actions, even if those actions relate to the same NAAQS addressed in this rule.

b. Cost Thresholds Examined and Selected for Ozone-Season NO_X

In the proposal, EPA examined various cost thresholds for ozone season NO_X and identified a cost threshold with rapidly diminishing returns at $500/ton. EPA observed that moving beyond the $500 cost threshold up to a $2,500 cost threshold would result in only minimal additional ozone season NO_X emission reductions and would likely bypass less expensive non-EGU emission reduction opportunities (75 FR 45281). EPA noted that for greater costs the curves did not include all available reductions as they do not include non-EGU reductions (75 FR 44286). In the proposal, EPA noted the timely promulgation and implementation of this rule is responsive to the Court's remand of CAIR, will accelerate critical air quality improvement, and more effectively address the mandate of CAA section 110(a)(2)(D) to address significant contribution to nonattainment and interference with maintenance as expeditiously as practicable. EPA did not want to risk delaying air quality benefits available from EGU emission reductions, particularly those emission reductions which eliminate significant contribution to nonattainment and interference with maintenance for many receptors, while the Agency conducts additional analysis to support subsequent transport-related rulemakings including coverage of non-EGU sources (75 FR 45285).

EPA received comments suggesting that it consider cost thresholds higher than $500/ton as reductions beyond the proposed $500/ton cost threshold were needed to fully resolve nonattainment and maintenance issues in downwind states analyzed at proposal. Some of these comments suggested EPA should include non-EGUs as they consider the higher cost thresholds, others suggested EPA continue to exclude non-EGU sources in this rulemaking.

In response to those comments that suggested EPA explore higher cost thresholds because nonattainment and maintenance was not fully resolved, EPA first notes that CAA section 110 (a)(2)(D)(i)(I) only requires the elimination of emissions that significantly contribute to nonattainment or interfere with maintenance of the NAAQS in other states. Section 110(a)(2)(D)(i)(I) focuses exclusively on the transport component of nonattainment and maintenance problems. Section 110(a)(2)(D)(i)(I) does not shift to upwind states the responsibility for ensuring that all areas in other states attain the NAAQS. As such, the mandate of section 110(a)(2)(D)(i)(I) is not to ensure that reductions in upwind states are sufficient to bring all downwind areas in to attainment, it is simply to ensure that all significant contribution to nonattainment and interference with maintenance is eliminated. Thus, the presence of residual nonattainment or maintenance areas does not, by itself, signify a failure to satisfy the requirements of 110(a)(2)(D)((i)(I).

Furthermore, as noted in section VI.A, EPA is finalizing coverage only for the EGU emission source-sector category in this rulemaking. EPA has not included non-EGU sources in this final rulemaking. EPA remains convinced that timely promulgation and implementation of this rule is responsive to the Court's remand of CAIR.

To the extent that significant contribution is not eliminated for the 1997 ozone NAAQS standard at the $500/ton cost threshold, EPA is not addressing in this rulemaking whether a cost threshold greater than $500/ton is justified for some upwind states and downwind receptors. EPA believes it can best serve these states where concerns persist regarding projected nonattainment or maintenance of the 1997 ozone NAAQS by quickly finalizing this rule and seeking further non-EGU reductions in subsequent rulemakings. Table VI.B–2 illustrates the small amount of EGU reductions available as cost threshold increases above $500/ton. The ozone-season NO_X reductions available in the Transport Rule states between the $500/ton and $1,000/ton cost thresholds amount to less than 3,000 tons. EPA believes that potentially substantial non-EGU ozone-season NO_X reductions become available approaching the $1,000/ton cost threshold. EPA emphasized this in the proposal, noting that the cost curves for ozone season NO_X did not reflect all available reductions as they do not include non-EGU reductions (75 FR 45286). For these reasons, EPA did not consider cost thresholds greater than $500/ton.

EPA did not consider cost thresholds below $500/ton for ozone-season NO_X. $500/ton is a reasonable threshold representing a significant amount of lowest-cost NO_X emission reductions from EGUs, largely accruing from the installation of combustion controls, such as low-NO_X burners, and constitutes a reasonable cost level for operation of existing NO_X controls such as SCRs. EPA believes it would be

inappropriate for a state linked to downwind nonattainment or maintenance areas to stop operating existing pollution control equipment (which would increase their emissions and contribution). This is increasingly likely to occur at cost thresholds lower than $500/ton. Therefore, EPA did not find cost thresholds lower than $500/ton for ozone-season NO_X to be reasonable for development of the Transport Rule cost curves.

As discussed in section III of this preamble, EPA intends to finalize reconsideration of the March 2008 ozone NAAQS in the summer of 2011 and to expeditiously propose a transport-related action to address any necessary upwind state control responsibilities with respect to that reconsidered NAAQS.

c. Cost Thresholds Examined and Selected for Annual NO_X

Following the assessment of the cost curves in section IV.B and the air quality modeling of the AQAT calibration scenario using CAMx, EPA identified a single cost threshold at $500/ton for annual NO_X. Beyond requiring the year-round operation of existing post-combustion NO_X controls and other reductions modeled at $500/ton threshold, EPA observed a limitation in available low-cost annual NO_X reductions from EGUs. Approximately 7,000 tons of annual NO_X reductions were available from EGUs between the $500/ton and the $1,000/ton cost thresholds (See Table VI.B.–1). Furthermore, above the $500/ton threshold, similar to ozone-season NO_X cost curves, the annual NO_X cost curves do not include all available reductions as they do not include non-EGU reductions. EPA analysis suggests that while NO_X emission reductions lead to reductions in $PM_{2.5}$, SO_2 reductions are generally more cost-effective than NO_X reductions at reducing $PM_{2.5}$ (75 FR 45281). In part, for these reasons, EPA's multi-factor assessment suggested that the $500/ton cost threshold for annual NO_X in concert with the cost thresholds identified for SO_2 were the appropriate cost thresholds for eliminating significant contribution to nonattainment and interference with maintenance. EPA finds in the final Transport Rule that the $500/ton cost threshold for annual NO_X, in concert with the SO_2 cost threshold selected below, successfully eliminates significant contribution to nonattainment and interference with maintenance for the 1997 annual $PM_{2.5}$ NAAQS and the 2006 24-hour $PM_{2.5}$ NAAQS in the states covered by this Rule for $PM_{2.5}$.

The reasons for not considering cost thresholds lower than $500/ton for annual NO_X are the same as those identified for not doing so for ozone-season NO_X. In addition to its $PM_{2.5}$ reduction benefits, annual NO_X control at the $500/ton threshold can help to reduce nitrate replacement in the atmosphere. As explained earlier, nitrate replacement happens when SO_2 emissions reductions successfully reduce ammonium sulfate (a component of $PM_{2.5}$) but provoke a $PM_{2.5}$ rebound effect by freeing up additional ammonia to form ammonium nitrate (another component of $PM_{2.5}$).

d. Cost Thresholds Examined and Selected for SO_2

EPA first assessed the downwind air quality impacts of emission reductions modeled at the $500/ton threshold in all states found to be linked to downwind sites for $PM_{2.5}$ transport, as well as in the states hosting those downwind sites. The air quality assessment tool projected that those reductions do not fully resolve nonattainment and maintenance problems with the $PM_{2.5}$ standards for certain areas to which the following states are linked: Illinois, Indiana, Iowa, Kentucky, Maryland, Michigan, Missouri, New Jersey, New York, North Carolina, Ohio, Pennsylvania, Tennessee, Virginia, West Virginia, and Wisconsin. EPA proceeded to analyze available 2014 emission reductions at higher cost thresholds from these states, collectively referred to as Group 1 states for SO_2 control.

For Group 2 states, the air quality assessment tool projected that the SO_2 reductions at this first cost threshold assessed would resolve the nonattainment and maintenance problems for all of the areas to which the following states are linked: Alabama, Georgia, Kansas, Minnesota, Nebraska, South Carolina, and Texas. EPA thus finds that these states' significant contribution is eliminated at the $500 per ton level in 2014; they are collectively referred to as Group 2 states for SO_2 control. Because their significant contribution is eliminated at this stringency of control, EPA did not analyze higher cost thresholds for Group 2 states.

The states in Group 1 and Group 2 are rationally grouped considering air quality and cost. EPA determined that it would not be appropriate to assign the same cost threshold to Group 2 and Group 1 states because a significantly lower cost threshold was sufficient to resolve air quality problems at all downwind receptors linked to the Group 2 states. Although states are linked to different sets of downwind receptors, EPA analysis indicated that the cost threshold needed to resolve downwind air quality problems varied only to a limited extent among states within Group 1 and among states within Group 2. It did, however, vary greatly between the Group 1 and Group 2 states. The ruling of the DC Circuit in *Michigan* v. *EPA,* 213 F.3d 663, 679–80 (D.C. Cir. 2000), accepting EPA's prior use of a transport remedy with uniform controls, supports EPA's decision to use a uniform cost threshold for a group of states.

As discussed in section VI.B, the cost threshold for Group 1 states was examined at escalating levels in 2014 (it remained at $500/ton for Group 2 states). EPA examined emissions at SO_2 cost thresholds of $500, $1,600, $2,300, $2,800, $3,300, and $10,000/ton for Group 1 states in 2014. The higher SO_2 marginal costs were only imposed in Transport Rule states starting in 2014, by which time the advanced pollution control retrofits induced at those higher cost thresholds could be installed. (*See* section VI.D.2 for EPA's assessment and decisions regarding SO_2 budget formation in Group 1 states in 2014.)

EPA observed some degree of additional air quality benefit at downwind receptors across all of the cost thresholds examined for SO_2, but significant air quality outcomes were achieved at the $2,300/ton cost threshold. The $2,300/ton threshold is projected to resolve the last remaining nonattainment area for the annual $PM_{2.5}$ standard (Liberty-Clairton),[46] and it also is projected to resolve the nonattainment and maintenance problems with the 24-hour $PM_{2.5}$ standard at 1 monitor in the Detroit area and resolve the maintenance problems in the Cleveland area. There were significant air quality improvements at this level in connection with widespread deployment of pollution control technology, while the cost impacts remained reasonable.

Moving beyond $2,300/ton to the $2,800/ton and $3,300/ton thresholds, EPA projected notably smaller air quality improvements compared to those projected when moving from the $1,600/ton threshold to the $2,300/ton threshold. EPA also projected no ultimate change in the 24-hour $PM_{2.5}$

[46] AQAT results indicated that one receptor in the Liberty-Clairton area continued to have maintenance problems with the annual $PM_{2.5}$ standard. However, final air quality modeling results (described in section VIII.B) indicated that this maintenance problem was resolved for this receptor under the final Transport Rule.

attainment status of the remaining nonattainment area (Liberty-Clairton) or three remaining maintenance areas (Chicago,[47] Detroit, and Lancaster).[48] At the same time, the total program cost continued to increase by about the same interval at each of these thresholds as it had between the $1,600/ton and $2,300/ton thresholds. EPA thus observed a relatively lower cost-effectiveness of downwind $PM_{2.5}$ control via upwind SO_2 reductions beyond $2,300/ton for the receptors linked to Group 1 states. Table VI.D–1 and Figure VI.D–1 demonstrate this relationship between cost of EGU SO_2 control and downwind $PM_{2.5}$ concentration impacts, showing a sustained diminishing of cost effectiveness beyond the $2,300/ton threshold. The $2,300/ton threshold in this analysis is situated at the ''knee-in-the-curve'' area of cost-effectiveness for addressing downwind $PM_{2.5}$ concentrations with SO_2 reductions, beyond which point the air quality gains per dollar spent on additional reductions are much smaller. This relationship is demonstrative of the economic potency of SO_2 reductions at each cost threshold to address the $PM_{2.5}$ concentrations at linked receptors in this analysis.

TABLE VI.D–1—COST-EFFECTIVENESS OF GROUP 1 STATE SO_2 REDUCTIONS [a] FOR DOWNWIND $PM_{2.5}$ CONTROL

SO_2 cost threshold	Additional system cost expended (2007$, billions)	Average $PM_{2.5}$ air quality improvement (μg/m³) [b]	Air quality cost-effectiveness (average μg/m³ reduced per billion $ expended)
$500	0.22	3.27	14.74
$1,600	0.82	3.86	4.70
$2,300	1.35	4.22	3.11
$2,800	1.94	4.37	2.25
$3,300	2.36	4.50	1.91
$10,000	3.61	4.99	1.38

[a] Downwind $PM_{2.5}$ improvement based on SO_2 reductions from states ''linked'' to specific receptors. *See* section VI.C.
[b] Measured as the reduction in maximum design value for the 24-hour $PM_{2.5}$ NAAQS from AQAT base case to each SO_2 threshold for receptors with remaining nonattainment and maintenance exceedances at the $500/ton threshold, averaged across these receptors.

Figure VI.D-1

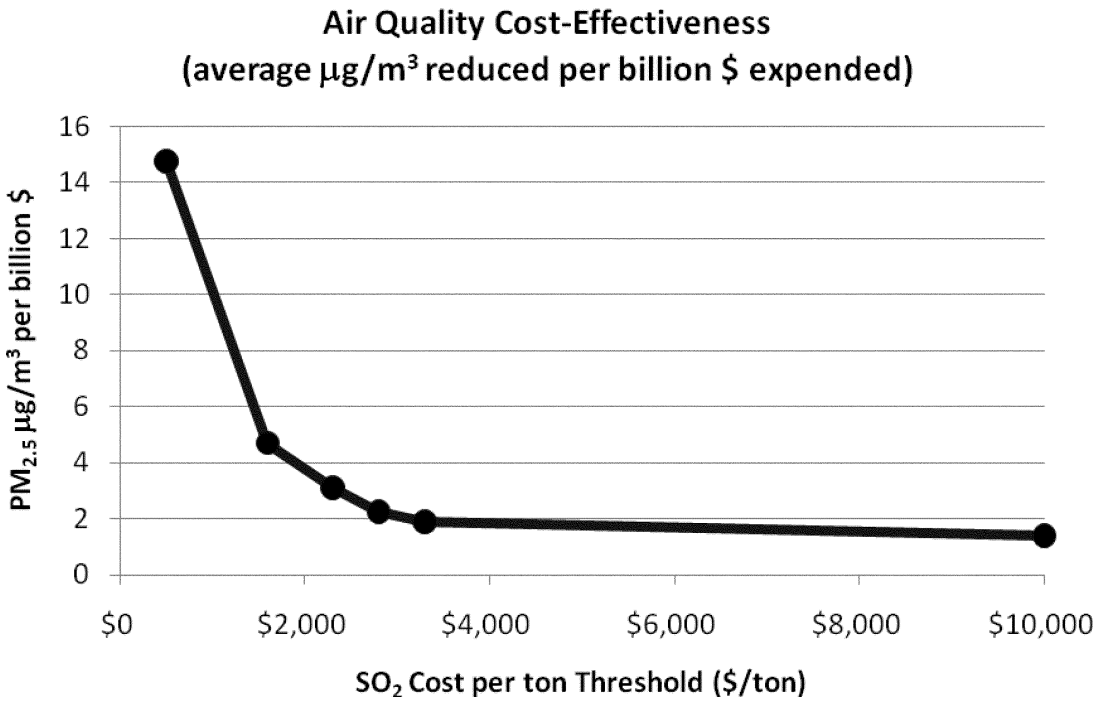

Furthermore, even at the $10,000/ton cost threshold, AQAT still projects Liberty-Clairton to face maintenance concerns with the annual $PM_{2.5}$ standard and is projected to remain in nonattainment of the 24-hour $PM_{2.5}$ standard, while the Chicago[49] and Lancaster areas are still projected to have residual maintenance problems

[47] This area is not currently designated as nonattainment for the 24-hour $PM_{2.5}$ standard. EPA is portraying the receptors and counties in this area as a single 24-hour maintenance area based on the annual $PM_{2.5}$ nonattainment designation of Chicago-Gary-Lake County, IL-IN.

[48] AQAT results indicated that two receptors in the Detroit area continued to have maintenance problems with the 24-hour $PM_{2.5}$ standard. However, final air quality modeling results (described in section VIII.B) indicated that only one receptor continued to have maintenance problems in this area for this standard under the final Transport Rule.

[49] This area is not currently designated as nonattainment for the 24-hour $PM_{2.5}$ standard. EPA is portraying the receptors and counties in this area as a single 24-hour maintenance area based on the annual $PM_{2.5}$ nonattainment designation of Chicago-Gary-Lake County, IL-IN.

with the 24-hour $PM_{2.5}$ standard. EPA projected that even total elimination of EGU SO_2 emissions (no matter the cost) would not be able to resolve either nonattainment of the 24-hour $PM_{2.5}$ standard in the Liberty-Clairton area or the residual maintenance concerns with that standard in Lancaster County. EPA thus finds that other $PM_{2.5}$ strategies, including local reductions of other $PM_{2.5}$ precursors, are important to consider for remaining nonattainment and maintenance areas to seek further improvements in $PM_{2.5}$ concentrations.

Considering both air quality and cost, EPA's multi-factor analysis indicated $2,300 per ton as an appropriate cost threshold for SO_2 in the Group 1 states. EPA believes the analyzed cost thresholds lower than $2,300/ton were not appropriate for SO_2 control in the Group 1 states under the Transport Rule for the following reasons:

- Downwind air quality impacts up to the $2,300 threshold are significant. Moving up to $2,300/ton successfully resolves all downwind nonattainment of the annual and 24-hour $PM_{2.5}$ standards except for the Liberty-Clairton receptor in Allegheny county with respect to 24-hour $PM_{2.5}$, which EPA has noted is heavily influenced by a local source of organic carbon (75 FR 45281).
- Upwind emission reductions available up to $2,300/ton are highly cost-effective compared with similar regulations.
- The emission reductions up to this threshold are achievable with widespread deployment of controls that can be installed at power plants by 2014.
- As stated at proposal, EPA finds it reasonable to require a substantial level of control of upwind state emissions that significantly contribute to nonattainment or maintenance problems in another state. The $2,300/ton cost threshold is comparable to EPA's survey of local non-EGU SO_2 reduction opportunities in the $PM_{2.5}$ NAAQS RIA, which range in cost from just above $2,300/ton to over $16,000/ton (2007 $). EPA thus finds it reasonable to seek EGU SO_2 reductions up to $2,300/ton (rather than at a lower cost threshold) in the states linked to receptors with ongoing attainment and maintenance concerns with the $PM_{2.5}$ NAAQS.

EPA believes the analyzed cost thresholds above $2,300/ton were not appropriate for SO_2 control in the Group 1 states under the Transport Rule for the following reasons:

- As noted above, AQAT suggests reductions up to $2,300/ton were able to resolve all projected downwind nonattainment of the annual and 24-hour $PM_{2.5}$ NAAQS, with the sole exception of projected nonattainment of the 24-hour $PM_{2.5}$ standard at a receptor in Liberty-Clairton. It is well-established that, in addition to being impacted by regional sources, the Liberty-Clairton area is significantly affected by local emissions from a sizable coke production facility and other nearby sources, leading to high concentrations of organic carbon in this area.[50] EPA finds that the remaining $PM_{2.5}$ nonattainment problem is predominantly local and therefore does not believe that it would be appropriate to establish a higher cost threshold solely on the basis of this projected ongoing nonattainment of the 24-hour $PM_{2.5}$ standard at the Liberty-Clairton receptor.
- Approximately 70 percent of base case SO_2 emissions from Group 1 states were eliminated at the $2,300/ton cost threshold, leaving a decreasing amount of emission reductions available at each increased cost threshold beyond $2,300/ton.
- Additional EGU SO_2 reductions available from EGUs beyond the $2,300/ton threshold level realize significantly less improvement in downwind $PM_{2.5}$ concentrations per dollar spent to impact receptors linked to Group 1 states. In other words, the cost-effectiveness of controlling EGU emissions in Group 1 states to improve downwind $PM_{2.5}$ concentrations at the linked receptors is notably diminished beyond the $2,300/ton threshold in this analysis. *See* Figure VI.D–1.
- EGUs are by far the largest source category for SO_2 emissions. This analysis shows that reductions of EGU SO_2 emissions up to the $2,300/ton cost threshold were significantly more cost-effective for improving downwind $PM_{2.5}$ concentrations than further such reductions (beyond the $2,300/ton cost threshold) would be to address the remaining $PM_{2.5}$ maintenance concerns. EPA's analysis also shows that these maintenance concerns cannot be fully resolved even with complete elimination of all remaining EGU SO_2 emissions, no matter the cost. EPA finds that other $PM_{2.5}$ precursor emission reductions, particularly those from local sources will be critical for states in these remaining areas to consider for controlling $PM_{2.5}$ concentrations with respect to maintenance of the 2006 24-hour $PM_{2.5}$ NAAQS.

In summary, the appropriate cost thresholds for each state were identified through the multi-factor assessment. This assessment included both cost and air quality considerations. As explained above, the ozone-season NO_X threshold was determined to be $500/ton for all states required to reduce ozone-season NO_X, with residual nonattainment and maintenance concerns to be addressed in a future rulemaking addressing a broader set of source categories for additional cost-effective reductions. For $PM_{2.5}$, the appropriate cost threshold for each state was determined to be either the level at which nonattainment and maintenance issues were completely resolved in downwind states to which the state is linked, the level where remaining nonattainment and maintenance issues are primarily local, or where we found greatly diminished improvements in air quality occurring if EPA moved further up the cost curve. This assessment yielded a cost threshold of $2,300/ton on SO_2 for Group 1 states starting in 2014 ($500/ton in 2012), a cost threshold of $500/ton on SO_2 for Group 2 states, and a cost threshold of $500/ton on annual NO_X for all states required to reduce emissions for purposes of the annual or 24-hour $PM_{2.5}$ NAAQS in this rule.

As explained above, none of these specific cost thresholds establish any precedent for the cost per ton stringency of reductions EPA may require in future transport-related rulemakings; these specific cost thresholds are based on current analyses of air quality and cost of emission reductions with respect to the NAAQS considered in this rulemaking and thus would not be relevant to future rulemakings (which would consider updated information) or rulemakings with respect to different NAAQS. In particular, EPA acknowledges that additional action EPA will require in a subsequent rulemaking to address significant contribution to nonattainment and interference with maintenance of the 2008 ozone NAAQS (once reconsideration is finalized) is very likely to require a higher cost per ton stringency of ozone-season NO_X control applied to a broader set of source categories from upwind states than found to be appropriate for this rulemaking.

2. State Emission Budgets (Step 4)

a. Budget Methodology

EPA used the multi-factor assessment to identify, for each state, the cost threshold that should be used to quantify that state's significant contribution. As described above, in the context of this rulemaking EPA identified a cost threshold of $500/ton for ozone-season NO_X control for all states required to reduce ozone-season

[50] *http://www.epa.gov/pmdesignations/2006standards/final/TSD/tsd_4.0_4.3_4.3.3_r03_PA_2.pdf.*

NO_X emissions for purposes of the 1997 ozone NAAQS in this rule. EPA also identified a cost threshold of $500/ton for annual NO_X control for all states required to reduce annual NO_X emissions for purposes of the annual or 24-hour $PM_{2.5}$ NAAQS in this rule. Finally, EPA identified a cost threshold of $500/ton of SO_2 starting in 2012 for all states required to reduce SO_2 emissions for purposes of the annual or 24-hour $PM_{2.5}$ NAAQS in this rule, and $2,300/ton for the Group 1 states starting in 2014.

EPA used these cost thresholds from the multi-factor analysis to quantify each state's emissions that significantly contribute to nonattainment or interfere with maintenance downwind. For example, for a Group 1 state, EPA modeling of the cost threshold conveys emission reductions available in each covered state from operation of existing pollution controls as well as all emission reductions available at cost thresholds of $500/ton for annual NO_X in 2012 and 2014, $500/ton for SO_2 in 2012, and $2,300/ton for SO_2 in 2014. The total SO_2 and NO_X projected at these cost levels in that state in those years represents that state's emissions once significant contribution to nonattainment or interference with maintenance downwind for the relevant $PM_{2.5}$ NAAQS has been eliminated.

TABLE VI.D–2—EXAMPLE OF EMISSION REDUCTIONS AND BUDGET FORMATION IN PENNSYLVANIA FOR ANNUAL SO_2 AND NO_X[a]

		Final cost threshold	Base case emissions (1,000 tons)	Remaining emissions at cost thresholds (1,000 tons)	Emissions eliminated (1,000 tons)
A	B	C	D	E	F
2012	SO_2	$500	493	279	215
	NO_X	500	129	120	9
2014	SO_2	2,300	507	112	395
	NO_X	500	132	119	13

[a] **Note:** In this table, emissions are shown for fossil-fuel-fired EGUs > 25 MW (*i.e.,* those units likely covered by the Transport Rule). Table VI.D.2 illustrates how budgets are derived from the elimination of significant contribution for the state of Pennsylvania. Column C illustrates the cost thresholds applied in the costing run that was ultimately identified as the final cost threshold in the multi-factor analysis. Column D shows the base case emissions for the identified pollutant in the identified time period. Column E shows the emission levels that result when the cost thresholds identified in column C are applied. Because this is the cost threshold identified through the multi-factor analysis and the point where all significant contribution to nonattainment and interference with maintenance has been addressed for the $PM_{2.5}$ NAAQS—state budgets are based on these emission levels. The final column illustrates the emission reductions for the state in an average year (before accounting for variability).

EPA's modeling of a state's SO_2 and annual NO_X emission levels (from fossil-fired EGUs > 25 MW) at the relevant cost thresholds in each state reflect that state's emissions from covered sources after the removal of significant contribution to nonattainment and interference with maintenance of the $PM_{2.5}$ NAAQS considered in this rulemaking. As these state emission levels reflect the removal of significant contribution and interference with maintenance, they are reasonable levels on which to determine state budgets. Consequently, EPA based state budget levels on the state level emissions that remained at the cost threshold. Each state's budget corresponds to its emission level following the elimination of significant contribution to nonattainment and interference with maintenance in an average year (before taking year-to-year variability into account, as discussed in section VI.E below). Therefore, the implementation and realization of these budgeted emission levels leads to the elimination of significant contribution to nonattainment and interference with maintenance and EPA meets the statutory mandate of section 110(a)(2)(D)(i)(I) with respect to the 1997 annual $PM_{2.5}$ NAAQS and the 2006 24-hour $PM_{2.5}$ NAAQS.

EPA's establishment of state budgets for ozone-season NO_X control follow the same methodology as described above for SO_2 and annual NO_X. Implementation of these ozone-season NO_X budgets reflects the elimination of significant contribution to nonattainment and interference with maintenance of the 1997 ozone NAAQS for 15 states, whereas 11 other states' ozone-season NO_X budgets reflect meaningful progress toward (but may not reflect full completion of) this elimination under the mandate of section 110(a)(2)(D)(i)(I). *See* section III for lists of states.

This approach to basing budgets on projected state level emissions used in the multi-factor analysis is identical to the approach used in the proposal for determining 2014 SO_2 budgets for Group 1 states. EPA is extending this approach more broadly in the final Transport Rule to create state budgets for ozone-season NO_X, annual NO_X, and SO_2 in all relevant states in both 2012 and 2014. In the proposal EPA used a more complex approach based on a comparison of historic and projected unit-level emissions (further adjusted for operation of existing controls) in each state to create 2012 state budgets for ozone-season NO_X, annual NO_X, and Group 2 SO_2. At the time of proposal, EPA believed that historic 2009 emissions data were in some cases more representative of expected emissions in 2012 than pure modeling projections made at the time (75 FR 45290).

However, following the proposal EPA has made significant updates to the IPM model for projecting EGU emissions, including specifically the adoption of 2009 historic data into its modeling parameters directly. EPA also received substantial public input following the proposal on the model's assumptions and representation of individual units, which allowed EPA to improve its 2012 and 2014 emission projections for states under the cost thresholds considered. These modeling updates diminish the concerns EPA expressed at proposal that 2009 historic data may have offered for some states a better proxy for 2012 emissions than model projections, particularly now that EPA is incorporating 2009 data directly in its updated modeling projections. Given these updates to the model in response to public comment, EPA believes it is more appropriate for the final rule to use a consistent approach based on projected state level emissions for all state budgets, as was done for Group 1 SO_2 budgets in 2014 at proposal. EPA received significant comment supporting the use of the model to

project state-level emissions for creating budgets in this manner. EPA also received comments that criticized the proposal's methodology for 2012 budgets for lack of transparency, unnecessary complexity, and inconsistency with the state-level emission projections used in the air quality modeling. EPA's decision for the final Transport Rule to consistently apply across all pollutants the budget methodology originally used for Group 1 SO_2 budgets in 2014 addresses those concerns.

This budget methodology for the final rule uses projected state-level emissions in 2012 and 2014 to set emission budgets for those years on relevant pollutants for that state to control under the Transport Rule. EPA's modeling projects that some states have 2014 emissions that are lower than their 2012 projected emissions even as the same cost threshold (*e.g.,* $500/ton) is applied in both years. This occurs in the annual NO_X, ozone-season NO_X, and Group 2 SO_2 program. As such, EPA's application of this budgeting methodology results in a tightening of budgets in states whose projected emissions of that budgeted pollutant decline from 2012 to 2014 as the cost threshold is held constant.

There are two primary variables that explain the decrease in emissions for some states between 2012 and 2014 as the cost threshold remains constant over both time periods. First, even though the cost threshold is constant between 2012 and 2014 for the programs noted above, the cost threshold for SO_2 Group 1 increases in 2014. This higher cost threshold for Group 1 SO_2 results in obvious reductions in SO_2 emissions in the Group 1 states, but also may lower the cost of certain related NO_X reductions in those states as well such that they become newly available within the $500/ton threshold. For example, if a state increases natural gas generation in response to the higher SO_2 cost threshold, such action also yields additional annual and ozone-season NO_X emission reductions that are cost-effective at the $500/ton NO_X threshold. Where the cost curve modeling shows such additional cost-effective NO_X reductions in tandem with SO_2 control, EPA is therefore reducing those states' 2014 annual NO_X and ozone-season NO_X budgets accordingly, so that those budgets accurately reflect remaining emissions from covered sources in those states after the elimination of all emissions that can be reduced up to the relevant cost thresholds (*e.g.,* $500/ton).

Second, some of these additional reductions are driven by non-Transport Rule variables. These are reductions that occur due to state rules, consent decrees, and other planned changes in generation patterns that occur after 2012, but during or prior to 2014. For example, EPA modeling reflects emission reduction requirements under provisions of a Georgia state rule that go into effect after 2012 but before 2014. These requirements involve the installation and operation of specific advanced pollution controls. These source-specific requirements under a legal authority unrelated to the Transport Rule result in sharp reductions in Georgia's baseline emission projections between 2012 and 2014. Even though the cost threshold for NO_X and for SO_2 in Georgia is $500/ton in both 2012 and 2014, EPA believes it is important to establish separate NO_X and SO_2 budgets that accurately reflect the emissions remaining in Georgia (and other states experiencing similar reductions) after the elimination of emissions that can be reduced up to the Transport Rule remedy's cost thresholds (*e.g.,* $500/ton) (see Table VI.D.3). It illustrates a notable decrease between the 2012 and 2014 state budgets for NO_X and SO_2 in Georgia that is largely driven by state rule requirements. If EPA did not adjust 2014 budgets to account for other emission reductions that would occur even in the baseline, other sources within the state would be allowed to increase their emissions under the unadjusted Transport Rule budgets to offset the emission reductions planned under other requirements such as state rules. Therefore, to prevent the Transport Rule from allowing such offsetting of emission reductions already expected to occur between 2012 and 2014, EPA is establishing separate budgets for 2012 and 2014 in the final Transport Rule to capture emission reductions in each state that would occur for non-Transport Rule-related reasons (*i.e.,* in the base case) during that time.

EPA's modeling also projects that other states would slightly increase emissions from 2012 to 2014 even at the same cost threshold, such as $500/ton. There are two primary variables that explain the increase in emissions for these states between 2012 and 2014. These increases are generally small in magnitude. For annual and ozone season NO_X, they occur as a byproduct of small changes in dispatch related to changes in non-Transport Rule factors (*e.g.,* higher demand in 2014). For SO_2, they primarily occur in Group 2 states and, in addition to the reasons given above, are influenced by some generation shifting from Group 1 to Group 2 states as the Group 1 states begin to face a higher cost threshold in 2014. EPA believes that allowing for such emission growth in covered states beyond 2012 would be inconsistent with the Transport Rule's identification and elimination of significant contribution to nonattainment and interference with maintenance beginning in 2012. Therefore, for any covered state whose emissions of a relevant pollutant are projected to increase from 2012 to 2014 under the relevant cost thresholds selected in the multi-factor analysis described above, EPA is finalizing that state's 2014 emission budget to maintain the same level of the 2012 emission budget, thereby disallowing such an emission increase that is inconsistent with the 110(a)(2)(D)(i)(I) mandate. Tables VI.D–3 and VI.D–4 below list state emission budgets.[51]

TABLE VI.D–3—SO_2 AND ANNUAL NO_X STATE EMISSION BUDGETS FOR ELECTRIC GENERATING UNITS BEFORE ACCOUNTING FOR VARIABILITY *

[Tons]

	Group	SO_2		NO_X	
		2012–2013	2014 and beyond	2012–2013	2014 and beyond
Alabama	2	216,033	213,258	72,691	71,962
Georgia	2	158,527	95,231	62,010	40,540

[51] These budgets include minor technical corrections to SO_2 budgets in three states (KY, MI, and NY) that were made after the impact analyses for the final rule were conducted. EPA conducted sensitivity analysis confirming that these differences do not meaningfully alter any of the Agency's findings or conclusions based on the projected cost, benefit, and air quality impacts presented for the final Transport Rule. The results of this sensitivity analysis are presented in Appendix F in the final Transport Rule RIA.

TABLE VI.D–3—SO_2 AND ANNUAL NO_X STATE EMISSION BUDGETS FOR ELECTRIC GENERATING UNITS BEFORE ACCOUNTING FOR VARIABILITY *—Continued

[Tons]

	Group	SO_2		NO_X	
		2012–2013	2014 and beyond	2012–2013	2014 and beyond
Illinois	1	234,889	124,123	47,872	47,872
Indiana	1	285,424	161,111	109,726	108,424
Iowa	1	107,085	75,184	38,335	37,498
Kansas	2	41,528	41,528	30,714	25,560
Kentucky	1	232,662	106,284	85,086	77,238
Maryland	1	30,120	28,203	16,633	16,574
Michigan	1	229,303	143,995	60,193	57,812
Minnesota	2	41,981	41,981	29,572	29,572
Missouri	1	207,466	165,941	52,374	48,717
Nebraska	2	65,052	65,052	26,440	26,440
New Jersey	1	5,574	5,574	7,266	7,266
New York	1	27,325	18,585	17,543	17,543
North Carolina	1	136,881	57,620	50,587	41,553
Ohio	1	310,230	137,077	92,703	87,493
Pennsylvania	1	278,651	112,021	119,986	119,194
South Carolina	2	88,620	88,620	32,498	32,498
Tennessee	1	148,150	58,833	35,703	19,337
Texas	2	243,954	243,954	133,595	133,595
Virginia	1	70,820	35,057	33,242	33,242
West Virginia	1	146,174	75,668	59,472	54,582
Wisconsin	1	79,480	40,126	31,628	30,398
Grand Total		3,385,929	2,135,026	1,245,869	1,164,910
Group 1 Total		2,530,234	1,345,402	NA	NA
Group 2 Total		855,695	789,624	NA	NA

Note: These state emission budgets apply to emissions from electric generating units covered by the Transport Rule Program. Group 1/Group 2 designations are only relevant for SO_2 emissions budgets.

* The impact of variability on budgets is discussed in section VI.E.

The District of Columbia is not covered by the final Transport Rule. As discussed in section V.D of this preamble and as done for the Transport Rule proposal, EPA combined contributions projected in the air quality modeling from Maryland and the District of Columbia to determine whether those jurisdictions collectively contribute to any downwind nonattainment or maintenance receptor in amounts equal to or greater than the 1 percent thresholds. This modeling confirmed that the combined contributions exceed the air quality threshold at downwind receptors for the ozone, annual $PM_{2.5}$, and 24-hour $PM_{2.5}$ NAAQS considered. Both Maryland and the District of Columbia are therefore linked to these receptors.[52] However, the District of Columbia is not included in the Transport Rule because, in the second step of EPA's significant contribution analysis, we concluded that there are no emission reductions available from EGUs in the District of Columbia at the cost thresholds deemed sufficient to eliminate significant contribution to nonattainment and interference with maintenance of the NAAQS considered at the linked receptors. At the time of this rulemaking, EPA finds only one facility with units meeting the Transport Rule applicability requirements in the District of Columbia. EPA's projections do not show any generation from this facility to be economic under any scenario analyzed (including the base case), and the facility's owners have also announced plans to retire its units in early 2012.[53] Therefore, this unit is projected to have zero emissions in 2012. As such, the total SO_2 and NO_X emissions in the District of Columbia for EGUs that meet the Transport Rule applicability requirements is also projected to be zero. It follows therefore, that EPA did not identify any emission reductions available at any of the cost thresholds considered in the final rule's multi-factor analysis to identify significant contribution to nonattainment and interference with maintenance. For this reason, EPA concludes that no additional limits or reductions are necessary, at this time, in the District of Columbia to satisfy the requirements of section 110(a)(2)(D)(i)(I) with respect to the 1997 ozone, the 1997 $PM_{2.5}$ and the 2006 $PM_{2.5}$ NAAQS. EPA is therefore neither establishing budgets nor finalizing any FIPs for the District of Columbia in this rule.

TABLE VI.D–4—OZONE SEASON NO_X STATE EMISSION BUDGETS FOR ELECTRIC GENERATING UNITS BEFORE ACCOUNTING FOR VARIABILITY *

[Tons]

	2012–2013	2014 and beyond
Alabama	31,746	31,499
Arkansas	15,037	15,037
Florida	27,825	27,825
Georgia	27,944	18,279
Illinois	21,208	21,208

[52] It is important to note that Maryland's modeled contributions in isolation were greater than the 1 percent threshold for all three of the NAAQS considered at all of the same receptors for which Maryland and DC were ''linked,'' and therefore EPA would have considered Maryland ''linked'' to the same set of downwind receptors even if the Agency had treated Maryland's contributions and the District of Columbia's contributions separately.

[53] The future retirement status of this D.C. facility was also supported by its inclusion on PJM's future deactivation list. PJM further suggested that reliability issues related to their retirement are expected to be resolved by next year in time for its planned retirement date. (*See* PJM pending deactivation request in TR Docket.)

TABLE VI.D–4—OZONE SEASON NO_X STATE EMISSION BUDGETS FOR ELECTRIC GENERATING UNITS BEFORE ACCOUNTING FOR VARIABILITY *—Continued

[Tons]

	2012–2013	2014 and beyond
Indiana	46,876	46,175
Kentucky	36,167	32,674
Louisiana	13,432	13,432
Maryland	7,179	7,179
Mississippi	10,160	10,160
New Jersey	3,382	3,382
New York	8,331	8,331
North Carolina	22,168	18,455
Ohio	40,063	37,792
Pennsylvania	52,201	51,912
South Carolina	13,909	13,909
Tennessee	14,908	8,016
Texas	63,043	63,043
Virginia	14,452	14,452
West Virginia	25,283	23,291
Total	495,314	466,051

Note: These state emission budgets apply to emissions from electric generating units covered by the Transport Rule Program. Group 1/Group 2 designations are only relevant for SO_2 emissions budgets.

* The impact of variability on budgets is discussed in section VI.E.

EPA notes that the NO_X budgets for five states linked to downwind ozone receptors in the final Transport Rule are equal to their projected 2012 base case emissions. The five states are Arkansas, Indiana, Louisiana, Maryland, and Mississippi. These states are among those found to meet or exceed the 1 percent contribution threshold for the 1997 ozone NAAQS at downwind receptors and are thus ''linked'' to downwind receptors. EPA therefore evaluates, in the second step of its significant contribution analysis, what emission limits are necessary to ensure that all emissions that constitute the state's significant contribution to nonattainment and interference with maintenance are prohibited. As explained above, EPA decided to require from all such states all reductions available at the $500/ton cost threshold. The five states identified above do not appear to show EGU ozone-season NO_X reductions at the $500/ton cost threshold relative to the 2012 base case projections (which do not take into account reductions to be made in other states as a result of this rule). Therefore, EPA conducted further analysis to evaluate whether such reductions were available in these states and whether emission limits are necessary to prohibit these states from significantly contributing to downwind nonattainment or interfering with maintenance of the 1997 ozone NAAQS in other states. (*See* the docket to this rulemaking for the IPM run titled TR_uncontrolled_ozone_states_Final.'')

Specifically, EPA projected those states' ozone-season NO_X emissions if all other linked states (but not these five states) were to make all available reductions at the $500/ton threshold. That analysis revealed that if emission limits were not established for these five states, ozone-season NO_X emissions in each of the states would increase (beyond the 2012 base case emission projections), due to interstate shifts in electricity generation that cause ''emissions leakage'' in uncovered states. These increases would result in each state's emissions being above the level associated with the prohibition of all emissions that can be eliminated at the $500/ton threshold. EPA thus determined that it is necessary to establish emission limits for these states at the $500/ton level. These limits, although equal to the state's 2012 projected base case emissions, are necessary to prohibit all emissions that can be controlled at the $500/ton cost threshold. In other words, the significant contribution to nonattainment and interference with maintenance addressed by the ozone FIPs for these states is the difference between these states' projected emissions if they were not covered under the Transport Rule (but other states were), and their emissions after all emissions that can be eliminated at $500/ton are prohibited.

In addition, EPA notes that four of these five states (Arkansas, Indiana, Louisiana, and Mississippi) are linked to receptors in either the Houston or Baton Rouge areas, which are projected to continue facing nonattainment or maintenance concerns with the 1997 ozone NAAQS, respectively. To allow these states to increase emissions above base case projections would erode the measurable progress toward eliminating significant contribution to nonattainment and interference with maintenance secured by achieving ozone-season NO_X reductions in the other states linked to these receptors. Furthermore, as discussed in section III, EPA may require additional reductions in these states to fully address significant contribution to nonattainment and interference with maintenance with respect to the 1997 ozone NAAQS in a future rulemaking to be proposed after finalizing reconsideration of the 2008 ozone NAAQS.

b. Relationship of Group 1 and Group 2 States for SO_2 Control

In the Proposal, EPA chose not to allow sources in Group 1 states to use Group 2 SO_2 allowances for compliance, and likewise not to allow sources in Group 2 states to use Group 1 SO_2 allowances for compliance at any time. The preamble clearly states, ''With regard to interstate trading, the two SO_2 stringency tiers would lead to two exclusive SO_2 trading groups. That is, states in SO_2 Group 1 could not trade with states in SO_2 Group 2'' (75 FR 45216). No such distinction or limitation exists for NO_X allowance trading.

EPA received significant public comment both in support and opposition to the two distinct SO_2 trading programs. Those in opposition noted that the variability limits imposed at the state level made the compliance restrictions between the two groups unnecessary. Commenters also noted that it may unfairly penalize sources that are part of the same airshed, but are on opposite sides of a state boundary. Those in favor of the separate SO_2 compliance programs noted that it would reduce the probability of a state exceeding its variability limit. Allowing the use of Group 1 or Group 2 allowances for compliance between the two SO_2 programs would potentially encourage Group 1 states to purchase allowances instead of making reductions necessary to eliminate significant contribution. Group 1 states are states that need continued reductions (beyond the $500/ton threshold) to eliminate their significant contribution to nonattainment and interference with maintenance. Group 2 states have already eliminated their significant contribution to nonattainment and interference with maintenance at the $500/threshold. So to allow Group 1 or Group 2 allowances to be used interchangeably for compliance between the two SO_2 groups would be to allow the shifting of reductions from areas where they are needed to eliminate significant contribution to nonattainment and interference with maintenance to areas where they are not needed to eliminate the prohibited emissions. EPA also agrees that allowing for trading between the two groups in the remedy finalized in this action would increase risk of a state exceeding its variability limit. For these reasons, EPA is finalizing this rulemaking with the same prohibition on SO_2 trading between Group 1 and Group 2 states that was defined in the proposal. Further, EPA clarifies that while trading of allowances (*i.e.,*

buying, selling, and banking) is allowed without restriction, it is specifically the surrender of SO_2 allowances for compliance that is limited. As mentioned earlier, a source in a Group 1 state can only use SO_2 allowances allocated to Group 1 states for compliance with the SO_2 trading program. Likewise, a source in a Group 2 state can only use SO_2 allowances allocated to Group 2 states for compliance with the SO_2 trading program.

c. Ozone-Season Budgets

EPA established the ozone-season NO_X budgets in a similar manner to the annual NO_X and SO_2 budgets by using the state level emissions from the cost threshold that reflected the removal of significant contribution to nonattainment and interference with maintenance. Ozone-season budgets were based on the state level emissions from fossil-fuel-fired units greater than 25 MW observed at this cost threshold. As described in section VI.B, all cost thresholds examined reflected the final Transport Rule geography and the marginal costs were applied accordingly. Therefore, for an ozone-only state like Florida, the state level emissions would only reflect an ozone-season cost threshold of $500/ton in the final cost curves for 2012 and 2014. For a state subject to both annual and ozone-season programs, the marginal cost curves would reflect a $500/ton NO_X cost year round, a $500/ton SO_2 cost in 2012 and the $2,300/ton SO_2 cost starting in 2014 if a Group 1 state.

(1) Length of Ozone Season

(a) Proposed Rule. For purposes of determining ozone-season budgets in the proposed rule, EPA defined the ozone season based on a 5 month period (May 1 through September 30). This 5 month ozone season was consistent with the approach taken by the OTAG, the NO_X SIP Call, and CAIR. EPA requested comment on whether EPA should base final rule budgets on a longer season, such as March through October.

(b) Public Comments. Several commenters supported continuing with the May through September time period. One commenter supported continuing with this time period, but argued that EPA should consider lengthening the ozone season for future efforts. One commenter questioned the concept of ozone season budgets and recommended EPA focus on sources with greater emissions on high ozone days.

(c) Final rule. For the final rule, EPA has retained the approach in the proposed rule, as commenters broadly supported the proposal's ozone-season duration and ozone-season NO_X limitations. Notably, many Transport Rule states covered for $PM_{2.5}$ reductions will have sources with annual NO_X controls that are likely to keep operating year round to address $PM_{2.5}$ and ozone. EPA believes that experience from ozone-season NO_X trading has consistently shown that the emission measures taken to comply with ozone-season budgets provide emission reductions throughout the ozone-season, including the highest ozone days. (*See* NO_X Budget Trading Program and CAIR Program progress reports in the docket to this rulemaking or at *http://www.epa.gov/airmarkets/progress/nbp08.html* and *http://www.epa.gov/airmarkets/progress/CAIR_09/CAIR09.html.*) However, EPA believes that there is merit in future Agency actions addressing ozone transport in considering strategies to target high ozone days more specifically.

d. Summary of Cost Thresholds and Final Budgets for $PM_{2.5}$ and Ozone

Summary of methodology. In summary, EPA determined that SO_2 emissions that could be reduced for $2,300/ton in 2014 should be considered a state's significant contribution to nonattainment and interference with maintenance, unless EPA determined that a lesser reduction would fully resolve the nonattainment and/or maintenance problem for all the downwind receptors to which a particular state might be linked. For these Group 2 states EPA is determining that a lesser reduction of SO_2, based on the amount of SO_2 reductions that can be reasonably achieved by 2012 is appropriate. This level is defined by the reductions observed in the $500/ton cost threshold. EPA also determined that all states linked to downwind $PM_{2.5}$ nonattainment and maintenance problems should be required to achieve those emission reductions that can be reasonably achieved by 2012. Finally, EPA determined that all states linked to downwind $PM_{2.5}$ nonattainment and maintenance problems should, by 2012, remove all NO_X emissions that can be reduced for $500/ton and run all existing controls in 2012.

For ozone-season NO_X, EPA determined that all states linked to downwind ozone and nonattainment and maintenance problems should be required to achieve those ozone-season emission reductions associated with a cost threshold of $500 per ton. Additionally, EPA examined final 2012 and 2014 budgets based on state level emissions at $500 cost threshold.

The budget formation methodology finalized in this action responds to concerns about state budgets expressed by commenters on the Transport Rule proposal. EPA requested comment on the four step approach used to determine significant contribution and determine budgets in the proposal. Some commenters noted that the state level emissions from the cost thresholds used to determine significant contribution to nonattainment and interference with maintenance did not match the state level emissions allowed by the final budgets. The concern was that the state level emissions that reflected the elimination of significant contribution in the AQAT analysis, in particular for NO_X, were less than the emissions allowed by the final budgets. The result would be an implementation that did not quite fully eliminate the significant contribution to nonattainment and interference with maintenance defined in the rule. The proposed budgets not matching the levels reflected in the proposed costing runs were an artifact of the budget formation process that relied on a combination of historic and projected data. While EPA noted this process resulted in state budgets that ''reflected'' EGU emissions at $500/ton, it was not always consistent with the EGU emissions at $500/ton in the costing runs as the commenters noted. By using the cost curves to determine both significant contribution to nonattainment and interference with maintenance—and state budgets—in the final rule, EPA addresses the commenter's concerns about any inconsistency between the two in the proposal.

Some commenters expressed concern that the Transport Rule would result in state budgets that were in some cases higher than those established in CAIR. Commenters suggested that this would be inconsistent with requirements or the spirit of certain CAA provisions aimed at preventing backsliding, *i.e.,* sections 110(l), 172(e), and 193. However, the DC Court of Appeals rejected the state budgets in CAIR as arbitrary and capricious and not consistent with CAA section 110(a)(2)(D)(i)(I) (North Carolina, 531 F.3d 918 and 921) and remanded CAIR to EPA to promulgate a new rule replacing CAIR and consistent with the Court's decision (North Carolina, 550 F.3d 1178). As discussed elsewhere in this section, on remand EPA developed new, final state budgets that address the Court's concerns and meet section 110(a)(2)(D)(i)(I) requirements.

Although some state budgets under the final rule are higher than those

under CAIR, this does not violate either the letter or the spirit of CAA provisions aimed at backsliding. In particular, CAA section 110(l) provides that the Administrator may not approve a plan revision that would ''interfere with any * * * applicable requirement'' of the CAA. 42 U.S.C. 7410(l). Because the Court reversed and remanded CAIR with instructions to ''remedy'' the rule's ''fundamental flaws'' (including specifically the state budgets found to be unlawful (North Carolina, 550 F.3d 1178), it is difficult to see how new state budgets replacing unlawful budgets and meeting section 110(a)(2)(D)(i)(I) requirements could be viewed as interfering with requirements of the CAA. Indeed, the commenters' approach would severely limit EPA's ability to meet the Court's mandate to develop a new rule consistent with section 110(a)(2)(D)(i)(I). *See* North Carolina, 531 F.3d 921 (explaining that EPA may not require ''some states to exceed the mark'' of eliminating their significant contribution). Further, the other CAA sections cited by the commenters (section 172(e), addressing circumstances where the Administrator relaxes a NAAQS, and section 193, addressing the treatment of requirements promulgated before the November 15, 1990, enactment date for the 1990 Amendments to the Clean Air Act) are not applicable here.

Additionally, while the CAIR budgets may have been tighter than Transport Rule state budgets for a couple of states, the sum of state budgets that were subject to both CAIR and the Transport Rule is lower under the Transport Rule for the annual programs. Moreover, the carryover of the large Title IV allowance bank in CAIR allowed for a great deal more emissions within any given state than is permitted under the Transport Rule.

E. Approach to Power Sector Emission Variability

1. Introduction to Power Sector Variability

Variability is an inherent aspect of the production and delivery of electricity. It follows that variations in state emissions are not only a result of variations in the level of emission control, but also are caused by the inherent variability in power generation. The state budgets do not account for this latter source of variability at the state level. Emission variability is built into the design of power systems, which use a wide mix of power generation sources with varying use and emission patterns to ensure reliability in electric power generation. Variations in weather, demand due to changes in the level of economic activity, the portion of electric generation that is fossil-fuel-fired, the length and number of outages at power generation units, and other factors, can lead to significant variations in the load levels of different power generation sources. Variations in the load levels of sources in any given state cause variations in the level of emissions in that state. Thus, EPA believes it is appropriate, in this rule, to take into account the variations that are caused by inherent variability in power generation. More specifically, variations in these external variables can cause significant fluctuations in state emissions, even when action has been taken to prohibit all emissions within a state that significantly contribute to nonattainment or interfere with maintenance in another state. For this reason, EPA considers variability when determining the state specific requirements in this rule. EPA does so by developing variability limits and assurance levels for each state, as described in this section, that are consistent with the statutory mandate of CAA section 110(a)(2)(D)(i)(I).

Loads on a power system, and thus on power generation sources in a given state that are on the power system, vary over every time interval, changing not only in the short term and seasonally, but also annually. As noted above, load patterns and levels are determined by a multiplicity of factors, including weather, economic activity, the portion of electric generation that is fossil-fuel-fired, and the length and number of outages at power generation units, which vary over time. In particular, weather obviously varies not just from season-to-season but also from year-to-year, and even small changes in annual weather patterns can affect how the power system and power generation sources on the power system operate during a year. For example, load, and the resulting use of generation sources on an interconnected grid to meet load, depend not only on how hot a summer day is, but also on where a heat wave occurs and how long it lasts. Similarly, a relatively cold winter that drives up winter load may also change what generation sources are used to address the increased demand for heat. Thus, the pattern of generation may shift geographically as a weather pattern moves across the country. Because weather and other factors affecting loads, and the patterns of generation used to meet loads, vary over time and from state to state, the resulting level of emissions also varies over time and from state to state.

This variability in emissions is not a result of variation in emission rates, emission controls, or emission control strategies, but instead is a result of the inherent variability in power generation. Patterns of generation change to ensure demand for electricity is met and to ensure continued reliability of the power system. This results in temporal and geographic fluctuations in emissions. In the final Transport Rule, like the proposed rule, EPA explicitly takes account of these changing patterns of generation and the resultant variability in power sector emissions.

As discussed previously, EPA identified a specific amount of emissions that must be prohibited by each state to meet the requirements of CAA section 110(a)(2)(D)(i)(I). EPA also developed state baseline emissions for power generation sources based on projections of state emissions in an average year before the elimination of prohibited emissions, and state budgets for power generation sources based on projections of state emissions in an average year after the elimination of such emissions. However, because of the inherent variability in state-level baseline emissions—resulting from the inherent variability in loads and power system and power generation source operations—state-level emissions will fluctuate from year-to-year even after all significant contribution to nonattainment and interference with maintenance that EPA identified in this final rule are eliminated. In an above average year, emissions may exceed the state budgets which are based on an analysis of projected emissions in an average year. EPA believes that, because baseline emissions are variable for reasons unrelated to the degree of emission control in a state and emissions after the elimination of all significant contribution to nonattainment and interference with maintenance are therefore also variable, it is appropriate to take this variability into account in developing the remedy for meeting the requirements of CAA section 110(a)(2)(D)(i)(I). The variability limits and assurance levels in the final rule account for this inherent variability, while ensuring that emissions within each state that significantly contribute to nonattainment or interfere with maintenance in another state are prohibited. EPA believes this approach is both reasonable in that it reflects the operation of the power system generation in order to maintain electric reliability and consistent with the statutory mandate of CAA section 110(a)(2)(D)(i)(I). For these reasons, EPA

is finalizing variability limits for each state budget to identify the range of emissions that EPA believes is likely to occur in each state following the elimination of all the state's significant contribution to nonattainment and interference with maintenance.

As discussed above, the air quality-assured trading remedy's state-specific budgets represent each state's emissions in an average year after elimination of significant contribution to nonattainment and interference with maintenance. Because actual base case emissions are likely to vary from projected base case emissions, this remedy incorporates provisions that account for such variability. While the primary purpose of this remedy is to eliminate significant contribution and interference with maintenance, EPA believes variability limits also satisfy several other objectives. The remedy provides the flexibility to deal with real-world variability in the operation of the power system through air quality-assured trading and reduces costs of compliance with emission reduction requirements, while still providing assurance for downwind states that significant contribution to nonattainment and interference with maintenance by upwind states will be eliminated. EPA believes the limited fluctuation in state level emissions that this approach permits is consistent with the statutory mandate of section 110(a)(2)(D)(i)(I) because some geographic and temporal shifting of emissions necessarily results from the inherent variability in power generation and is caused by factors unrelated to the degree of emission control, such as weather, economic activity, and unit availability. Far from excusing any state from addressing emissions within the state that significantly contribute to nonattainment or interfere with maintenance in other states, these variability limits ensure that the system can accommodate the inherent variability in the power sector while ensuring that each state eliminates the amount of emissions within the state, in a given year, that must be eliminated to meet the statutory mandate of section 110(a)(2)(D)(i)(I).

Moreover, the structure of the program, which achieves the required emission reductions through limits on the total number of allowances allocated, assurance provisions, and penalty mechanisms, ensures that the variability limits only allow the amount of temporal and geographic shifting of emissions that is likely to result from the inherent variability in power generation, and not from decisions to avoid or delay the installation of necessary controls. Under the remedy, an individual state can have emissions up to its budget plus the variability limit. However, the requirement that all sources hold allowances covering emissions, and the fact that those allowances are allocated based on state-specific budgets *without* variability, ensure that the total emissions from the states do not exceed the sum of the state budgets. The remedy, therefore, ensures both that total emissions do not exceed the total of the state budgets and that the required emission reductions occur in each state.

This section describes how EPA calculated variability limits for each state to achieve this goal.

2. Transport Rule Variability Limits

EPA performed analyses using historical data to demonstrate that there is year-to-year variability in base case emissions (even when emission rates for all units are held constant) and to quantify the magnitude of this variability.

The focus of the analysis is on quantifying the magnitude of the inherent year-to-year variability in state-level EGU emissions independent of measures taken to control those emissions (and thus due only to changes in electricity generation within each state). EPA used this analysis to set variability limits as part of the remedy to ensure that states are eliminating their significant contribution to nonattainment and interference with maintenance to protect air quality.

As discussed in detail below, EPA is finalizing the Transport Rule with 1-year variability limits calculated using a modified approach from the one described in the proposal. EPA is not including the proposal's 3-year variability limits in the final Transport Rule. EPA received comments that the 3-year variability limits increased program costs and diminished compliance flexibility without delivering any additional air quality benefits. EGU owners and operators expressed concern that 3-year variability limits would be impracticable to implement and that the 1-year variability limits themselves would be adequately stringent to ensure elimination of significant contribution to nonattainment and interference with maintenance in each state.

After further consideration, EPA has concluded that 3-year variability limits would be unnecessary, would be difficult to anticipate, and would not have a measurable impact on air quality benefits. EPA has determined that annual limits are sufficient to eliminate significant contribution to nonattainment and interference with maintenance in all upwind states while accommodating the historically observed year-to-year fluctuation in state-level EGU emissions even at the same rate of emissions control in a given state.

In the proposal, EPA used statistical methods to derive the 3-year variability limit directly from the 1-year variability limit, meaning that the two are statistically equivalent in the long run under certain statistical assumptions. Primarily, these assumptions were that the variation in electric demand around the budget is random from year-to-year and that, when the annual emissions are averaged over a multi-year time period, the average emissions per year will equal the state's budget. The first assumption was also made in the assessment of the historical year-to-year variation in heat input in developing the 1-year limit (*see* section 2 of the ''Power Sector Variability Final Rule TSD'' for more details). Regarding the second assumption, since the state-by-state emission budgets are based on the availability of emission reductions at an equal marginal cost level, EPA expects the sources in each of the upwind states to make these cost-effective reductions and to meet the emission budgets each year, on average.

Since the 3-year variability limit was based on average year-to-year variability over a longer time horizon, EPA notes that a random ordering of those years could yield 2 above-average years in a row. If, by chance, a third above-average year were to follow, the state could face violation of the 3-year limit, even if over a time period longer than 3 years, that state would never have exceeded the statistically-equivalent 1-year variability limit and its annual emissions would have averaged to the level of its budget. Effectively, this means that imposing a multi-year variability limit would erode the 1-year variability limit's ability to accommodate historically observed year-to-year variability in state-level EGU emissions (due only to generation changes), and it would do so without providing any additional air quality benefits or protection for downwind areas (since the average emissions over the long time horizon equal the level of the budget).

For more details about the relationship between the 1- and 3-year limits, see the discussions in section 3 of the ''Power Sector Variability'' TSD from the proposed Transport Rule, which describes the derivation of the 3-year limit from the 1-year variability and section 3 of the ''Power Sector Variability Final Rule TSD'', which describes the results of a numerical

simulation showing that the 1- and 3-year limits are statistically indistinguishable and, thus, redundant over the course of the program to accommodate year-to-year variability.

While EPA expects the yearly emissions in each state, on average, to equal the level of the budgets, EPA also estimated the air quality impacts of 5, 10, 15, and 20 percent emission variability using the air quality assessment tool, which is presented in section 4 of the ''Power Sector Variability Final Rule TSD.'' That analysis shows that year-to-year fluctuations of up to 20 percent in SO_2 emissions from upwind states linked to a given downwind receptor do not undermine the ability of the Transport Rule programs to resolve nonattainment or maintenance concerns at that receptor. The analysis presented in the TSD focuses on SO_2 emissions and was designed to examine the sensitivity of downwind air quality to upwind EGU emission levels. The share of total SO_2 emitted by EGUs is significantly larger than the share of total NO_X emitted by EGUs. For example, in the states for which EPA modeled base case contributions of these pollutants, EGUs accounted for 74 percent of total SO_2, 14 percent of total annual NO_X, and 15 percent of total ozone-season NO_X emissions. Therefore, when varying EGU emissions only, downwind air quality would be most sensitive to upwind variations in SO_2, because relative variations in EGU SO_2 emissions have a greater impact on total SO_2 emissions than the same relative variation in EGU NO_X emissions would have on total NO_X emissions affecting downwind air quality. Because the Transport Rule only affects upwind emissions from EGU sources, downwind air quality would be more sensitive to variability in upwind state SO_2 emissions under this rule than variability in upwind state NO_X emissions under this rule (given that the rule affects a smaller scope of total NO_X emissions compared to the scope affected of total SO_2 emissions). Thus, EPA chose to analyze the ''worst-case'' potential downwind air quality impacts from year-to-year variability above upwind state SO_2 budgets, and EPA therefore believes that its findings from this analysis are valid for ascertaining the potential downwind air quality impacts from variation at those levels in both SO_2 and NO_X under the Transport Rule programs.

Furthermore, because the state budgets are based directly on IPM modeling of electric generation when cost-effective emission reductions have been achieved, sources within each state should have the same incentive to meet that budget, on average, in any given year. Additional EPA analysis supports the claim that states would be no more likely to exceed 1-year variability limits without the 3-year limits than with the 3-year limits. *See* the ''Power Sector Variability Final Rule TSD'' for more details on this statistical analysis. Finally, because the state budgets (and thus the total amount of allowances available) are fixed and every covered source must hold allowances covering its emissions, it is not feasible for all, or even many, states to repeatedly exceed their budgets.

The approach calculated the standard deviation in state-level heat input from units expected to be covered by the final Transport Rule over an 11-year time period (2000 through 2010), from which the 95th percent confidence level was calculated. EPA divided this value by the mean to get the percentage variation in heat input. The two-tailed 95th percent confidence level is the equivalent of the 97.5 percent upper (single-tailed) confidence level. This approach yielded an average year-to-year heat input variability for each state, as a proxy for historic year-to-year variability in state-level EGU emissions while holding emission rates constant. The result, expressed as a percentage, conveys the maximum degree to which EGU emissions at the state level may be expected with 95th percent confidence to vary around a given target (*i.e.,* budget) from year-to-year, on average, based on the statistical analysis of historic heat input over the 2000 through 2010 time period.

From the state-by-state variability calculations, EPA identified a single variability level (percentage) for each of the annual and ozone-season programs based on the historic variability measured at units in covered states on an annual basis and an ozone-season basis, respectively. In the proposal, EPA ''identified a single set of variability levels * * * to apply to all states in order to make the application of the variability limits straightforward rather than developing state-by-state percentage variability values'' (75 FR 45293). In the final rule, EPA is taking the straightforward approach of identifying a single set of variability levels to apply to all states because EPA has determined that it is reasonable to afford all states under the Transport Rule programs the extent of measured historic variability experienced by any Transport Rule state during 2000 through 2010. In the variability analysis for the final rule, EPA identified Tennessee as having the highest measured historic variability of annual heat input of 18 percent, and Virginia as having the highest measured historic variability of ozone-season heat input of 21 percent. Because the percentage of variability in Tennessee on an annual basis and in Virginia on an ozone-season basis are reasonably likely to occur in each of the other states in the future, EPA believes it is appropriate to apply an 18 percent annual variability limit to all states covered by the annual SO_2 and NO_X programs and a 21 percent ozone-season variability limit to all states covered by the ozone-season NO_X program.[54]

EPA's analysis of historic heat input variability in multiple states over the 2000 to 2010 baseline yields a range of potential year-to-year variability values for state-level EGU emissions. As discussed above, any one state's measured variability (in this case, from 2000 to 2010) is due to a multiplicity of factors. These factors include, but are not limited to, variation in weather, variation in demand due to increased or decreased level of economic activity, variation in the portion of electric generation that is fossil-fuel-fired, and variation in the length and number of outages at power generation units, and these individual factors may sometimes act in concert and may other times be offsetting.

The mix and levels of factors present in a state from year-to-year can lead to variation of state-level emissions above and below the level for the state under average conditions. Because the levels of the various factors are difficult to predict on a year-to-year basis for an individual state, the resulting variability in state-level emissions is difficult to predict. Moreover, because the electric generation, transmission, and distribution system in the eastern half of the U.S. is highly integrated, year-to-year variation in these factors in one state can cause year-to-year variability in state-level emissions both in that state and in other states on the system. For example, increased demand due to extreme weather or increased economic activity in one state can be met through increased generation and emissions in a number of states.

Because these factors can vary year-to-year in every state in ways that are difficult to predict and can affect other states, EPA maintains that the maximum variability measured in one state for a discrete period (2000–2010) is

[54] The six states in the supplemental proposal for inclusion in the Transport Rule's ozone-season NO_X program have measured historic ozone-season variability that would be adequately covered by this final rule's ozone-season NO_X variability level (21 percent). Please see the ''Power Sector Variability Final Rule TSD'' for more details.

reasonably likely to occur in the future in any of the states in the region. Consequently, EPA believes that it is reasonable to use the maximum historic percentage variability figure as a proxy for the percentage variability that any of the states is likely to experience in the future. Although EPA is therefore using a uniform percentage figure for variability, EPA applies that percentage figure to each state-specific budget so that variability in tons of emissions is determined on a state-specific basis. That state-specific number is used in determining whether the assurance provisions and penalty are triggered in the specific state. EPA also believes that it is appropriate to accommodate this potential future variability at the state level if and only if it can be accommodated without undermining the programs' beneficial impacts on downwind air quality that eliminate significant contribution to nonattainment or interference with maintenance of the NAAQS assessed in this rulemaking (*see* the ''Power Sector Variability Final Rule TSD'' for more information on this analysis). The Transport Rule identifies and quantifies, on a state-by-state basis, the emissions in each state that significantly contribute to nonattainment or interfere with maintenance in another state. This is done by analyzing specific air pollution linkages between each upwind state and each downwind maintenance or nonattainment receptor. Nonetheless, it is clear from the air quality analyses that the air quality outcome at a given downwind receptor is a function of the cumulative emissions from all upwind states and the receptor's home state. Once the Transport Rule emission reduction requirements are implemented in all states subject to the programs, EPA's analysis shows that the impact on a downwind receptor of any single upwind state's year-to-year fluctuation of up to 20 percent in SO_2 emissions would be so limited as to not disturb that receptor's ability to maintain or attain the NAAQS analyzed in this rulemaking. Therefore, to the extent that such variability has been measured in historic data in any state subject to the Transport Rule programs, it is reasonable to provide for potential future variability in Transport Rule states within the scope of what EPA's analysis shows to preserve downwind air quality gains achieved by the Transport Rule programs.

The approach to establishing variability limits in the final rule modifies the approach from the proposed rule in two ways. First, EPA is applying only a percentage variability limit to each budget in the final rule, whereas the proposed rule applied the greater of a percentage or an absolute tonnage variability limit to each budget. EPA explained in the proposal that it was necessary to impose both a percentage and a tonnage limit due to the inclusion of ''states with small numbers of units where expected variability would be more pronounced in percentage terms'' (75 FR 45293). However, the states with the smallest numbers of units included at proposal (such as Connecticut and the District of Columbia) are not covered by any of the final Transport Rule's programs. In the final rule's variability analysis, Tennessee has the highest measured annual variability percentage and Virginia has the highest measured ozone-season variability percentage. Both of these states have a sufficient number of units for the percentage variability findings to be representative of variability in all of the Transport Rule states; therefore, it is not necessary to impose a tonnage limitation in the final rule.

Second, EPA has expanded the historic baseline of the variability analysis to consider heat input data from 2000 through 2010, as compared to 2002 through 2008 at proposal, and EPA has also expanded the dataset to include all units expected to be covered by the final Transport Rule's programs. EPA received a number of comments that the proposal's variability limits were too stringent in part because they relied on too short a historical baseline that failed to capture the full extent of long-run year-to-year variability. EPA agrees with these comments and believes that the historic baseline modification described above supports variability limits in the final rule that are a better approximation of future potential year-to-year variability in state-level EGU emissions around the budgets as a function of inherent variability in baseline state-level EGU operations. EPA believes the 2000 through 2010 historic baseline supports a more accurate approximation of year-to-year variability in state-level EGU operations than previously measured on a 2002 through 2008 baseline.

Some commenters expressed the view that allowing variability limits in addition to state budgets undermines the requirements of CAA section 110(a)(2)(D)(i)(I) to eliminate significant contribution to nonattainment and interference with maintenance of the NAAQS in downwind states. EPA disagrees with these comments. As explained above, EPA finds that year-to-year variability is an inherent characteristic of power sector emissions whether or not such emissions are controlled by state budgets; the future year-to-year variability is a component of the sector's emissions baseline before emission reductions are required. As done for proposal, EPA has analyzed the impact of allowing emissions from upwind states in a given year to rise above the budgets but within the variability limits allowed in the final rule. This analysis shows that emission fluctuations around the budgets but within the variability limits will not undermine the downwind air quality gains achieved by the implementation of the Transport Rule budgets, and therefore the variability limits cannot be said to undermine the elimination of significant contribution to nonattainment or interference with maintenance achieved under the Transport Rule programs. Based on historical data and projected air quality impacts, the Agency believes that states will have sufficient flexibility and room to operate within the final rule's variability limits while addressing all emissions identified as significantly contributing to nonattainment or interfering with maintenance in other states.

F. Variability Limits and State Emission Budgets: State Assurance Levels

As explained above, EPA applied the variability levels on a state-by-state basis to calculate specific emission budgets with variability limits. The state budget plus the variability limit is also called the ''state assurance level.'' Table VI.F–1 shows final state budgets, variability limits, and assurance levels by state for SO_2 emissions. Table VI.F–2 shows final state budgets, variability limits, and assurance levels by state for annual NO_X emissions. Table VI.F–3 shows final state budgets, variability limits, and assurance levels by state for ozone-season NO_X emissions.

TABLE VI.F–1—STATE BUDGETS, VARIABILITY LIMITS, AND ASSURANCE LEVELS FOR SO_2 EMISSIONS

	Emission budget (tons)		Emission variability limit (tons)		State emissions assurance level (tons)	
	2012–2013	2014 and beyond	2012–2013	2014 and beyond	2012–2013	2014 and beyond
Alabama	216,033	213,258	38,886	38,386	254,919	251,644
Georgia	158,527	95,231	28,535	17,142	187,062	112,373
Illinois	234,889	124,123	42,280	22,342	277,169	146,465
Indiana	285,424	161,111	51,376	29,000	336,800	190,111
Iowa	107,085	75,184	19,275	13,533	126,360	88,717
Kansas	41,528	41,528	7,475	7,475	49,003	49,003
Kentucky	232,662	106,284	41,879	19,131	274,541	125,415
Maryland	30,120	28,203	5,422	5,077	35,542	33,280
Michigan	229,303	143,995	41,275	25,919	270,578	169,914
Minnesota	41,981	41,981	7,557	7,557	49,538	49,538
Missouri	207,466	165,941	37,344	29,869	244,810	195,810
Nebraska	65,052	65,052	11,709	11,709	76,761	76,761
New Jersey	5,574	5,574	1,003	1,003	6,577	6,577
New York	27,325	18,585	4,919	3,345	32,244	21,930
North Carolina	136,881	57,620	24,639	10,372	161,520	67,992
Ohio	310,230	137,077	55,841	24,674	366,071	161,751
Pennsylvania	278,651	112,021	50,157	20,164	328,808	132,185
South Carolina	88,620	88,620	15,952	15,952	104,572	104,572
Tennessee	148,150	58,833	26,667	10,590	174,817	69,423
Texas	243,954	243,954	43,912	43,912	287,866	287,866
Virginia	70,820	35,057	12,748	6,310	83,568	41,367
West Virginia	146,174	75,668	26,311	13,620	172,485	89,288
Wisconsin	79,480	40,126	14,306	7,223	93,786	47,349

Note: Budgets, limits, and assurance levels apply to each state's emissions from covered sources, as defined by this final rule, only.

TABLE VI.F–2—STATE BUDGETS, VARIABILITY LIMITS, AND ASSURANCE LEVELS FOR ANNUAL NO_X EMISSIONS

	Emission budget (tons)		Emission variability limit (tons)		State emissions assurance level (tons)	
	2012–2013	2014 and beyond	2012–2013	2014 and beyond	2012–2013	2014 and beyond
Alabama	72,691	71,962	13,084	12,953	85,775	84,915
Georgia	62,010	40,540	11,162	7,297	73,172	47,837
Illinois	47,872	47,872	8,617	8,617	56,489	56,489
Indiana	109,726	108,424	19,751	19,516	129,477	127,940
Iowa	38,335	37,498	6,900	6,750	45,235	44,248
Kansas	30,714	25,560	5,529	4,601	36,243	30,161
Kentucky	85,086	77,238	15,315	13,903	100,401	91,141
Maryland	16,633	16,574	2,994	2,983	19,627	19,557
Michigan	60,193	57,812	10,835	10,406	71,028	68,218
Minnesota	29,572	29,572	5,323	5,323	34,895	34,895
Missouri	52,374	48,717	9,427	8,769	61,801	57,486
Nebraska	26,440	26,440	4,759	4,759	31,199	31,199
New Jersey	7,266	7,266	1,308	1,308	8,574	8,574
New York	17,543	17,543	3,158	3,158	20,701	20,701
North Carolina	50,587	41,553	9,106	7,480	59,693	49,033
Ohio	92,703	87,493	16,687	15,749	109,390	103,242
Pennsylvania	119,986	119,194	21,597	21,455	141,583	140,649
South Carolina	32,498	32,498	5,850	5,850	38,348	38,348
Tennessee	35,703	19,337	6,427	3,481	42,130	22,818
Texas	133,595	133,595	24,047	24,047	157,642	1 57,642
Virginia	33,242	33,242	5,984	5,984	39,226	39,226
West Virginia	59,472	54,582	10,705	9,825	70,177	64,407
Wisconsin	31,628	30,398	5,693	5,472	37,321	35,870

Note: Budgets, limits, and assurance levels apply to each state's emissions from covered sources, as defined by this final rule, only.

TABLE VI.F–3—STATE BUDGETS, VARIABILITY LIMITS, AND ASSURANCE LEVELS FOR OZONE-SEASON NO_X EMISSIONS

	Emission budget (tons)		Emission variability limit (tons)		State emissions assurance level (tons)	
	2012–2013	2014 and beyond	2012–2013	2014 and beyond	2012–2013	2014 and beyond
Alabama	31,746	31,499	6,667	6,615	38,413	38,114
Arkansas	15,037	15,037	3,158	3,158	18,195	18,195
Florida	27,825	27,825	5,843	5,843	33,668	33,668
Georgia	27,944	18,279	5,868	3,839	33,812	22,118
Illinois	21,208	21,208	4,454	4,454	25,662	25,662
Indiana	46,876	46,175	9,844	9,697	56,720	55,872
Kentucky	36,167	32,674	7,595	6,862	43,762	39,536
Louisiana	13,432	13,432	2,821	2,821	16,253	16,253
Maryland	7,179	7,179	1,508	1,508	8,687	8,687
Mississippi	10,160	10,160	2,134	2,134	12,294	12,294
New Jersey	3,382	3,382	710	710	4,092	4,092
New York	8,331	8,331	1,750	1,750	10,081	10,081
North Carolina	22,168	18,455	4,655	3,876	26,823	22,331
Ohio	40,063	37,792	8,413	7,936	48,476	45,728
Pennsylvania	52,201	51,912	10,962	10,902	63,163	62,814
South Carolina	13,909	13,909	2,921	2,921	16,830	16,830
Tennessee	14,908	8,016	3,131	1,683	18,039	9,699
Texas	63,043	63,043	13,239	13,239	76,282	76,282
Virginia	14,452	14,452	3,035	3,035	17,487	17,487
West Virginia	25,283	23,291	5,309	4,891	30,592	28,182

Note: Budgets, limits, and assurance levels apply to each state's emissions from covered sources, as defined by this final rule, only.

See section VII.E for the discussion of how variability limits and state assurance levels are used in the implementation of assurance provisions for the air quality-assured trading programs.

G. How the State Emission Reduction Requirements Are Consistent With Judicial Opinions Interpreting the Clean Air Act

The methodology described in this notice quantifies states' significant contribution to nonattainment and interference with maintenance in a manner that is consistent with the decisions of the DC Circuit. As discussed previously, the DC Circuit has issued two significant decisions addressing the requirements of 110(a)(2)(D)(i)(I). The first opinion largely upheld the NO_X SIP Call, *Michigan,* 213 F.3d 663, and the second found significant flaws in CAIR, *North Carolina,* 531 F.3d. 896. In both cases, the Court considered aspects of the methodology used by EPA to identify emissions that, pursuant to section 110(a)(2)(D)(i)(I), must be eliminated due to their impact on air quality in downwind states. EPA believes that the methodology used in this final rule is consistent with both opinions and rectifies the flaws the *North Carolina* court identified with the methodology used in CAIR. The methodology used for this rule relies on state-specific data to analyze each individual state's significant contribution, uses air quality considerations in addition to cost considerations to identify each state's significant contribution, and gives independent meaning to the ''interference with maintenance'' prong. This methodology is then applied in a reasonable manner consistent with the relevant judicial opinions.

In *North Carolina,* the Court held that EPA's approach to evaluating significant contribution was inadequate because, by evaluating only whether emission reductions were highly cost effective ''at the regional level assuming a trading program'', it failed to conduct the required state-specific analysis of significant contribution. *See id.* at 907. EPA, the Court concluded, ''never measured the 'significant contribution' from sources within an individual state to downwind nonattainment areas.'' *Id.* The Court did not, however, disturb the air-quality-based methodology used by EPA to identify the states with contributions large enough to warrant further consideration.

For this rule, EPA uses a first step similar to that used in CAIR to identify the states with relatively large contributions. However, in contrast to CAIR, it then uses a state-specific analysis. Instead of identifying a single emission level that could be achieved by the application of highly cost effective controls in the region, EPA determines, on a state-by-state basis, what reductions could effectively be achieved by sources in each state. EPA's new approach does not, as the CAIR methodology did, establish a regional cap on emissions that is then divided into state budgets that set the emission reduction requirements for each state. Instead, EPA develops, for each covered state, emission budgets based on the reductions achievable at a particular cost per ton in that particular state, taking into account the need to ensure reliability of the electric generating system. The selected cost/ton levels reflect consideration of both cost factors and air quality factors including the estimated impact of upwind states' emissions on each downwind receptor.

In addition, in developing this approach, EPA was guided by the Court's holdings regarding the use of cost to identify significant contribution. Specifically, the Court held in *Michigan* that EPA could ''in selecting the 'significant' level of 'contribution' under section 110(a)(2)(D)(i)(I), choose a level corresponding to a certain reduction in cost.'' *North Carolina,* 531 F.3d at 917 (citing *Michigan,* 213 F.3d at 676–77). This holding also supported the Court's conclusion in *Michigan* that it was acceptable for EPA to apply a uniform cost-criterion across states. *See Michigan,* 213 F.3d at 679. In the CAIR case, the Court rejected EPA's analysis, not because it relied on cost considerations to identify significant contribution, but because it found that EPA had failed to draw the significant contribution line at all. *See North Carolina,* 531 F.3d at 918 (''* * * here EPA did not draw the [significant contribution] line at all. It simply verified sources could meet the SO_2 caps with controls EPA dubbed 'highly

cost-effective.' ''). The holdings in *Michigan* regarding the use of cost and a uniform cost-criterion across states were left undisturbed. *See, e.g., North Carolina,* 531 F.3d at 917 (explaining that in *Michigan* the Court held that ''EPA may 'after [a state's] reduction of all [it] could * * * cost-effectively eliminate[],' consider 'any remaining contribution insignificant''). In fact, the Court acknowledged that, based on the *Michigan* holdings, the measurement of a state's significant contribution need not ''directly correlate with each state's individualized air quality impact on downwind nonattainment relative to other upwind states.'' *North Carolina,* 531 F.3d at 908.

For these reasons, EPA determined that it was appropriate in this rulemaking to consider the cost of controls to determine what portion of a state's contribution is its ''significant contribution.'' However, EPA also heeded the *North Carolina* Court's warning that ''EPA can't just pick a cost for a region, and deem 'significant' any emissions that sources can eliminate more cheaply.'' *North Carolina,*, 531 F.3d at 918. Thus, in this rulemaking, EPA departs from the practice used in the NO_X SIP Call and in CAIR of evaluating, based solely on the cost of control required in other regulatory environments, what controls would be considered ''highly-cost-effective.'' Instead, as part of its determination of a reasonable cost per ton for upwind state control, EPA evaluates the air quality impact of reductions at various cost levels and considers the reasonableness of possible cost thresholds as part of a multi-factor analysis.

In addition, the methodology used in this rulemaking gives independent meaning to the interfere with maintenance prong of section 110(a)(2)(D)(i)(I). In *North Carolina,* the Court concluded that CAIR improperly ''gave no independent significance to the 'interfere with maintenance' prong of section 110(a)(2)(D)(i)(I) to separately identify upwind sources interfering with downwind maintenance.'' *North Carolina,* 531 F.3d at 910. EPA rectified this flaw in this rulemaking by separately identifying downwind ''nonattainment sites'' and downwind ''maintenance sites.'' EPA decided to consider upwind states' contributions not only to sites that EPA projected would be in nonattainment, but also to sites that, based on the historic variability of their emissions, EPA determined may have difficulty maintaining the relevant standards. The specific mechanism EPA used to implement this approach is described in detail in section V.C, previously. For annual $PM_{2.5}$, this approach identified 16 maintenance sites in addition to the 32 nonattainment sites identified in the analysis of nonattainment receptors. For 24-hour $PM_{2.5}$ this approach identified 38 maintenance sites in addition to the 92 nonattainment sites identified in the analysis of nonattainment receptors. For ozone it identified 16 maintenance sites in addition to the 11 ozone nonattainment sites identified.

EPA applied this methodology using available information and data to measure the emissions from states in the eastern United States that significantly contribute to nonattainment or interfere with maintenance in downwind areas with regard to the 1997 and 2006 $PM_{2.5}$ NAAQS and the 1997 ozone NAAQS. Although EPA has not completely quantified the total significant contribution of these states with regard to all existing standards, EPA has determined, on a state-specific basis, that the emissions prohibited in the FIPs are either part of or constitute the state's significant contribution to nonattainment and interference with maintenance. Thus, elimination of these emissions will, at a minimum, make measurable progress towards satisfying the section 110(a)(2)(D)(i)(I) prohibition on significant contribution to nonattainment and interference with maintenance.

VII. FIP Program Structure To Achieve Reductions

A. Overview of Air Quality-Assured Trading Programs

EPA is finalizing an air quality-assured trading remedy that is substantially similar to the preferred trading remedy presented in the proposal. Key differences from the preferred trading remedy in the proposal include:

- Recalculated state budgets and variability limits (*i.e.*, state assurance levels) based on updated modeling;
- Simplified variability limits for 1-year application only;
- Revised allocation methodology for existing and new units and revised new unit set-asides for new units in Transport Rule states and new units potentially locating in Indian country;
- Changed start of assurance provisions to 2012 and increased assurance provision penalties; and
- Removed opt-in provisions.

In the final rule, as in the proposed rule, EPA is promulgating FIPS to require SO_2 and NO_X reductions from power plants in jurisdictions [55] that contribute significantly to nonattainment in, or interfere with maintenance by, a downwind area with respect to the 1997 ozone NAAQS, the 1997 annual $PM_{2.5}$ NAAQS, and/or the 2006 24-hour $PM_{2.5}$ NAAQS. These FIPs establish state-specific emission control requirements using state budgets starting in 2012, with a second phase of SO_2 reductions in some states in 2014. Section IV explains EPA's authority to issue FIPs.

The air quality-assured trading remedy in the final rule allows interstate trading to account for variability in the electricity sector, but also includes assurance provisions to ensure that the necessary emission reductions occur within each covered state. The assurance provisions restrict EGU emissions within each state to the state's budget plus the variability limit and ensure that every state is making reductions to eliminate the significant contribution to nonattainment and interference with maintenance that EPA has identified. While EPA proposed to impose these assurance provisions starting in 2014, the final rule implements these provisions starting in 2012 (*see* section VII.E of this preamble). Additionally, the final FIPs include penalty provisions adequate to ensure that the state budget with the variability limit will not be exceeded.

In the final rule, as in the preferred trading remedy discussed in the proposed rule, state-specific emission budgets without the variability limits are used to determine the number of emission allowances allocated to sources in each state. An EGU source is required to hold one SO_2 or one NO_X allowance, respectively, for every ton of SO_2 or NO_X emitted during the control period. Banking of allowances for use or trading in future years is allowed.

The final rule establishes four interstate trading programs, each starting in 2012: two for annual SO_2, one for annual NO_X, and one for ozone-season NO_X. One SO_2 trading program is for sources in states (referred to as SO_2 Group 1) that need to make larger reductions to eliminate their significant contribution, while the second is for sources in states (referred to as SO_2 Group 2) that need to make smaller reductions. A source in a Group 1 state can only use SO_2 allowances allocated to Group 1 states for compliance with

[55] Alabama, Arkansas, Florida, Georgia, Illinois, Indiana, Iowa, Kansas, Kentucky, Louisiana, Maryland, Michigan, Minnesota, Mississippi, Nebraska, New Jersey, New York, North Carolina, Ohio, Pennsylvania, South Carolina, Tennessee, Texas, Virginia, West Virginia, and Wisconsin. As discussed in section III, in a separate notice, EPA is proposing to include Iowa, Kansas, Michigan, Missouri, Oklahoma, and Wisconsin in the ozone-season NO_X requirements.

the SO_2 trading program. A source in a Group 2 state can only use SO_2 allowances allocated to Group 2 states for compliance with the SO_2 trading program. For compliance in the annual NO_X and ozone-season NO_X trading programs respectively, sources may use annual NO_X and ozone-season NO_X allowances allocated for any state, even if that state is in a different group for SO_2 than the source's state. Four sets of new emission allowances based on the new state-specific budgets without variability are allocated to sources, one set for each of the four trading programs. Each state has the option of replacing these FIPs with state rules. EPA believes that this remedy meets the concerns raised by the Court in the 2008 *North Carolina* decisions which remanded CAIR to EPA.

In the proposed rule, EPA took comment on all aspects of the preferred trading remedy and on two alternative regulatory options: (1) intrastate trading; and (2) direct control. EPA also took comment on a trading ratios approach.

Comments on the Preferred Trading Remedy: The great majority of public comments supported the preferred trading remedy. Most of these commenters voiced their support for the broadest possible trading mechanism because it allows for the most cost-effective implementation of any emission controls. Commenters noted that flexibility is always needed in the early years of new programs. Further, commenters favoring the preferred remedy agreed with EPA that, by using state-specific control budgets and allowing for interstate trading, the preferred remedy provided electricity generators the flexibility to undertake the most cost-effective reductions while assuring that the resulting reductions occur within the individual states.

Some commenters that supported the preferred remedy felt that, while not ideal, the interstate trading remedy was preferable to the alternative options of intrastate trading or direct control. Many commenters that supported the preferred remedy felt that the intrastate trading remedy and direct control remedy options offer minimal flexibility from a compliance perspective. They stated that this lack of flexibility would unnecessarily increase the cost of emission reductions.

Other commenters who generally support the preferred remedy cited concerns about the level of complexity in the assurance provisions. One commenter surmised that the preferred option creates significant risk where a company could unexpectedly find itself in a noncompliance situation due to the after-the-fact variability analysis. Another said that the rule's features needlessly reduce the system's efficiency and increase complexity. These commenters generally preferred unlimited trading, noting that EPA has proven success with Title IV, the NO_X SIP Call, and CAIR unlimited interstate trading programs and that allowing unrestricted interstate trading would increase flexibility to meet reduction goals and minimize increases in power costs.

EPA is finalizing the preferred trading remedy for the following reasons. EPA believes this approach is the most cost-effective and practical way to comply with the Court decision in *North Carolina* to ensure that all emissions in a given state that EPA has identified as significantly contributing to downwind nonattainment or interfering with maintenance are eliminated. The vast majority of public commenters agree. In addition, this approach provides the most flexibility for sources while meeting the Clean Air Act requirements and protecting public health. As a result, potential innovations and resulting cost savings are more likely to be found and implemented. Based on historical experience (see the Transport Rule proposal, 75 FR 45315), EPA has shown that the results offered by a flexible trading approach (*e.g.*, flexible compliance choices, incentives to reduce emissions early and in the highest emitting areas, 100 percent compliance with requirements) are substantial. A large number of commenters have corroborated this assessment. As summarized in the proposal, EPA believes that the preferred trading remedy will allow source owners to choose among several compliance options to achieve required emission reductions in the most cost-effective manner, such as installing controls, changing fuels, reducing utilization, buying allowances, or any combination of these actions. Interstate trading with assurance provisions provides additional regulatory flexibility that promotes the power sector's ability to operate as an integrated, interstate system and to provide electric reliability.

Comments on Intrastate Trading: A few commenters favored the first alternative, intrastate trading. One commenter who favored intrastate trading stated that many power plants have avoided investment in pollution controls by buying allowances from other plants, affecting local air quality improvement. EPA notes that this Transport Rule aims to address emissions from one state that significantly contribute to nonattainment or interfere with maintenance of certain NAAQS in other states. Local air quality issues are directly addressed by other provisions in the Clean Air Act.

Several commenters raised concerns about the intrastate trading approach. Some stated, as EPA noted in the proposal, that the intrastate trading option would be more resource intensive, more complex, less flexible, and potentially more susceptible to market manipulation than the other options. In addition, some commenters felt that this alternative would provide less flexibility to ensure electric reliability than the preferred approach, resulting in greater private costs to the power sector and greater social costs for consumers.

EPA is not finalizing the intrastate trading option for the following reasons. As EPA expressed in the proposal and as commenters have agreed, the intrastate trading option would be more resource intensive (both for EPA and for sources), more complex, less flexible, and potentially more susceptible to market manipulation than the preferred trading approach that EPA is finalizing. The intrastate trading option would be more costly and less transparent due to the large number of trading programs that would be operated simultaneously and the large number of annual auctions that would be held every year to address the issues of market power within states. This option would also result in a greater burden for participants operating EGUs in multiple states.

Comments on Direct Control Option: Several commenters favored the second alternative, direct control. One commenter stated that direct control—allowing no trading—was the option best aligned with the 2008 Court decisions. EPA disagrees with this comment for the reasons given below and because, as explained in this rule, EPA believes the air quality-assured trading remedy finalized today is consistent with the decisions of the DC Circuit in *North Carolina*.

Some commenters, who support direct control, voiced concerns that the other emission trading approaches would disadvantage poor and minority communities or allow increased emission impacts in neighborhoods near power plants. EPA notes that a direct control approach would not require controls on all plants in a state, but only on a sufficient number to address the transport requirements under section 110(a)(2)(d)(i)(I) that this rule addresses, and therefore would not necessarily mandate controls on each neighborhood power plant.

In addition, EPA has conducted an analysis of the effects of the Transport

Rule on environmental justice and other vulnerable communities. We concluded that, similar to our experience with the Acid Rain Program,[56] many environmental justice communities are expected to see large health benefits, and none are expected to experience any disbenefits, from implementing an air quality-assured trading program. The results of this analysis are presented in section XII of this preamble and Chapter 5 of the RIA for this rule. In addition, the CAA provides flexibility for state and local authorities to impose stricter limits on sources to address specific local air quality concerns. Such limits are independent of the requirements in this rule, and compliance with Transport Rule requirements in no way excuses a source from complying with other CAA or state law requirements.

Several commenters raised concerns with the direct control approach. One commenter felt that issues with electricity market reliability could occur during high electricity demand periods if sources ceased operations due to approaching their emission rate limitations under a direct control remedy. Another commenter was concerned that applying emission rates under a direct control remedy to small municipal units would cause disproportionate impacts on power plants where pollution control is more expensive. Other commenters cited concerns that EPA's proposed within-state company-wide averaging provision in the direct control proposed alternative (designed to allow some flexibility for sources) would place companies with fewer units at a disadvantage compared to companies with more units. EPA generally agrees with the commenters concerns and has decided not to finalize the direct control remedy for the following reasons. EPA modeling projects that the direct control alternative would result in fewer emission reductions and higher costs compared to the air quality-assured trading remedy. EPA analysis indicates that it is not necessary to implement a direct control approach in order to protect vulnerable and sensitive populations or environmental justice communities. Also, the direct control approach would result in fewer compliance options because a direct control approach would directly regulate individual sources by setting unit-level emission rate limits. This lack of flexibility could lead to potential increases in reliability risks in the electric power system and fewer opportunities for potential technological innovations that reduce emissions further and/or lower costs. For these reasons, EPA believes that this approach is inferior to the air quality-assured trading remedy.

Other Comments: A handful of commenters mentioned the trading ratios approach, though none favored it as a viable alternative. One commenter said the trading ratios approach was not consistent with CAA section 110(a)(2)(D) requirements that reductions in emissions occur in particular geographic locations. Other commenters agreed that it was administratively unworkable and would be difficult to implement due to the complexity and variety of meteorological conditions. EPA generally concurs with the commenters. In the proposal, EPA noted that it would not be possible under this approach, as contemplated, to include enforceable legal requirements to ensure that a specific state's emissions remain below a specified level or to ensure that a specific amount of reductions occur within a particular state. EPA specifically requested comment on whether a ratios trading program could be designed to provide such legal assurances. Of the few comments received, none offered such a solution. For these reasons, EPA is not finalizing this approach.

Some commenters offered additional suggestions, such as: unrestricted trading; using different authorities in the CAA to address interstate transport such as section 110(k)(5) and section 126; and an approach that would replace the assurance provisions by a system using both emission allowances usable (as well as bankable) in any state and assurance allowances usable (but not bankable) in only the state for which they would be issued. While EPA appreciates the thoughtful and constructive comments, we did not find any of these suggestions improved our ability to address interstate transport under CAA section 110(a)(2)(D)(i)(I), in line with the Court decision, in an administratively practical way.

Several commenters liked the idea of establishing unit-by-unit short-term and long-term performance standards/emission rates but suggested adding an overlaid cap and trade program. EPA believes the air quality-assured trading remedy finalized today is consistent with the decisions of the Court in *North Carolina* and will ensure the reductions necessary to meet statutory requirements.

For the 2012–2013 period, EPA took comment on whether the assurance provisions are needed, since the state-specific budgets would be based on known air pollution controls and the penalty provisions would be adequate to ensure that the budget, including a variability limit, would not be exceeded. Further, EPA proposed to use two variability limits: a 1-year limit, based on the year-to-year variability in emissions relative to the proposed budgets; and a 3-year limit based on the variability in a 3-year average relative to the proposed budget.

Based on comments on the assurance provisions (*see* section VII.E of this preamble) and variability limits (*see* section V*I.E.*2 of this preamble), EPA is finalizing the Transport Rule with state budgets plus variability limits and assurance provisions starting in 2012 for all of the trading programs. EPA sees an immediate need to ensure that emissions within a state do not exceed the state budget plus the variability limitation in order to comply with the Court's opinion. Further, commenters stated that the 3-year variability limit increased costs and unnecessarily complicated the trading programs. As explained in section VI.E.2, EPA is finalizing the 1-year variability limit starting in 2012, but not the 3-year limit.

B. Applicability

The applicability provisions in the final rule are, except as discussed herein, essentially the same as in the proposed rules and for each of the Transport Rule trading programs.

Under the general applicability provisions of the proposed rule, the Transport Rule trading programs would cover fossil-fuel-fired boilers and combustion turbines serving—on any day starting November 15, 1990 or later—an electrical generator with a nameplate capacity exceeding 25 MWe and producing power for sale, with the exception of certain cogeneration units and solid waste incineration units.

EPA requested comment on whether a more recent year should be used instead. The proposed use of the November 15, 1990 date was consistent with the use of 1990 as the beginning of the historical period for which owners and operators would generally be required to have information about their units for purposes of determining whether the units were covered by the Transport Rule trading programs. Because unit information is generally compiled and retained on a calendar year basis, EPA believes that, for the general applicability provisions, it is preferable to use January 1, rather than November 15. In determining which

[56] *See http://www.epa.gov/airmarkets/resource/docs/ejanalysis.pdf* and Ringquist, Evan J. 2011. ''Trading Equity for Efficiency in Environmental Protection? Environmental Justice Effects from the SO_2 Allowance Trading Program.'' Social Science Quarterly 92(2):297–323

year should be used as the reference year in the general applicability provisions, EPA considers several factors.

First, in order for owners and operators, and EPA, to be able to determine which units are subject to the Transport Rule trading programs, EPA believes that the reference year should not be so far in the past that the unit information necessary to make applicability determinations is not readily available. This particularly becomes an issue in cases of older units that have changed ownership over time. EPA found, in making some applicability determinations under the CAIR trading programs, that some older units with ownership changes had difficulty obtaining information back as far as twenty or more years. Using January 1, 1990 as the reference date in the general applicability provisions could effectively require some owners and operators to retain unit information going back as far as 20 years. As a point of contrast, under the title V permitting rules, owners and operators are generally required to retain data for 5 years. *See* 40 CFR 70.6(a)(3)(B).

Second, EPA also believes that the reference year used in the applicability provisions should be far enough in the past that the unit information on which applicability determinations are based provides a full picture of the nature of the unit and its operations over time, such as the types of fuels combusted at the unit and whether the unit has produced electricity for sale.

Third, EPA considers whether selecting a different reference year for the applicability provisions than the one in the proposed rule dramatically changes what units will be covered by the Transport Rule trading programs. In this case, EPA believes, based on available information about the units potentially subject to the Transport Rule, that using a somewhat later year than the one in the proposed rule will likely have little effect on what units are covered. Balancing these factors, EPA concludes that it is reasonable to use January 1, 2005, rather than November 15, 1990, in the general applicability provisions in the final rule.

In the final rule, EPA is taking the same approach with regard to defining whether a boiler or combustion turbine is considered to be ''fossil-fuel-fired'' as the one used in the proposal. Under the proposed rule, a unit was considered to be ''fossil-fuel-fired'' if it combusts any amount of fossil fuel at any time in 1990 or later. For the same reasons that EPA decided to use January 1, 2005 in the general applicability provisions, and in order to have a consistent reference year in all applicability-related provisions, the final rule defines a ''fossil-fuel-fired'' unit as one that combusts any amount of fossil fuel in 2005 or later.

EPA notes that the final Transport Rule allows a state to submit a SIP revision (an abbreviated or full SIP) under which the state may—in addition to making certain types of changes concerning allowance allocations in the Transport Rule trading programs—expand the general applicability provisions of the Transport Rule NO_X Ozone Season Trading Program to cover fossil-fuel-fired boilers and combustion turbines serving—at any time starting January 1, 2005 or later— a generator with a nameplate capacity as low as 15 MWe producing power for sale. The exemptions, discussed below, for cogeneration units and solid waste incineration units still will continue to apply.

Cogeneration unit exemption. Under the final rule (as well as the proposed rule) certain cogeneration units or solid waste incinerators are exempt from the FIP requirements. In particular, the final rule includes an exemption for a unit that qualifies as a cogeneration unit throughout the later of 2005 or the first 12 months during which the unit first produces electricity and continues to qualify through each calendar year ending after the later of 2005 or that 12-month period and that meets the limitation on electricity sales to the grid. In order to meet the definition of ''cogeneration unit'' in the final rules, a unit (*i.e.,* a fossil-fuel-fired boiler or combustion turbine) must be a topping-cycle or bottoming-cycle that operates as part of a ''cogeneration system,'' which is defined as an integrated group of equipment at a source (including a boiler, or combustion turbine, and a steam turbine generator) designed to produce useful thermal energy for industrial, commercial, heating, or cooling purposes and electricity through the sequential use of energy. A topping-cycle unit is a unit where the sequential use of energy results in production of useful power first and then, through use of reject heat from such production, in production of useful thermal energy. A bottoming-cycle unit is a unit where the sequential use of energy results in production of useful thermal energy first and then, through use of reject heat from such production, in production of useful power. In order to qualify as a cogeneration unit, a unit also must meet certain efficiency and operating standards.

In the proposed rule, a unit would have to qualify as a cogeneration unit and meet the limitation on electricity sales starting the later of 1990 or the year when the unit begins operating. EPA requested comment on whether a more recent year should be used. For the reasons discussed above concerning the reference year used in the general applicability provisions and in order to have a consistent reference year in all applicability-related provisions, EPA concludes that it is reasonable to use 2005, rather than 1990, in the cogeneration unit exemption provisions in the final rule. Consequently, the final rule provides that the requirements to qualify as a cogeneration unit and to meet the electricity sales limitation start no earlier than 2005.

In the final rule, EPA also clarifies that the electricity sales limitation under the exemption is applied in the same way whether a unit serves only one generator or serves more than one generator. In both cases, the total amount of electricity produced annually by a unit and sold to the grid cannot exceed the greater of one-third of the unit's potential electric output capacity or 219,000 MWhr. This is consistent with the approach taken in the Acid Rain Program (40 CFR 72.7(b)(4)), where the cogeneration unit exemption originated. EPA believes that this clarification is needed to ensure that a unit serving, for example, two generators would not have a limit on sales of electricity to the grid that would be different (*i.e.,* twice as high) from the limit for a unit serving only one generator with the same total nameplate capacity as the first unit's two generators.

EPA also took comment on whether efficiency standards should be applied on a system-wide basis to bottoming-cycle units (where useful thermal energy is produced before useful power is produced), as they are for topping-cycle units (where useful thermal energy is produced after useful power) and whether to exclude, from the requirement to meet the operating and efficiency standards, calendar years during which a cogeneration unit does not operate at all. Several commenters argued EPA should apply efficiency standards to both types of units. EPA agrees that applying efficiency standards on a system-wide basis to both bottoming-cycle and topping-cycle units is reasonable because EPA sees no technical reason to distinguish between the two types of units in this instance. EPA further agrees with commenters that excluding calendar years in which the cogeneration unit does not operate at all, *i.e.,* does not combust any fuel, from the requirements to meet operating and efficiency standards is also reasonable. For such a year, the unit would not produce any useful thermal

energy or useful power and therefore could not meet the minimum output requirements in the operating and efficiency standards, but the unit also would not have any emissions. For these reasons, the final rule expressly provides that the operating and efficiency standards do not have to be met for a calendar year throughout which a unit did not operate at all.

Solid waste incineration unit exemption. The final rule also includes an exemption for a unit that qualifies as a solid waste incineration unit during the later of 2005 or the first 12 months during which the unit first produces electricity, that continues to qualify throughout each calendar year ending after the later of 2005 or that 12-month period each year thereafter, and that meets the limitation on fossil-fuel use. In contrast, the exemption for solid waste incineration units in the proposed rule distinguished between units commencing operation before January 1, 1985 and those commencing operation on or after that date. A unit commencing operation before January 1, 1985 would be exempt if it qualified as a solid waste incineration unit starting the later of 1990 or the year when it began producing electricity and its average annual fuel consumption of non-fossil fuels exceeded 80 percent of total heat input during 1985–1987 and during any three consecutive calendar years after 1990. A unit commencing operation on or after January 1, 1985 would be exempt if it qualified as a solid waste incineration unit starting the later of 1990 or the year when it began producing electricity and its average annual fuel consumption of non-fossil fuel exceeded 80 percent of total heat input for the first 3 calendar years of operation and for any 3 consecutive calendar years thereafter.

In the proposal, EPA requested comment on whether it would be problematic to obtain sufficiently detailed information about unit operation potentially as far back as 1985–1987 and 1990, and whether the fuel consumption standard for each unit should be limited to more recent years. For the reasons discussed above concerning the reference year used in the general applicability provisions and in order to have a consistent reference year for all applicability-related provisions, EPA concludes that it is reasonable to use 2005, rather than 1990, in the solid waste incineration unit exemption in the final rule. In particular, EPA notes that the proposed provisions for units commencing operation before January 1, 1985 and for units commencing operation on or after January 1, 1985 could require some owners and operators to retain unit information going back more than 20 years before the promulgation of this final rule. Further, EPA believes that removing the distinction between units commencing operation during these two periods, and referencing somewhat later years as the earliest years for which information on fossil-fuel consumption is required, will result in the exemption still being based on sufficient data to provide a full picture of the nature and operation of the units involved. EPA also believes, based on available information about the units potentially subject to the Transport Rule, that this approach will not significantly change which units qualify for the exemption. Consequently, the final rule removes the distinction based on whether a solid waste incineration unit commences operation before January 1, 1985 or on or after January 1, 1985. In order to be exempt, the unit must qualify as a solid waste incineration unit during the later of 2005 or the first 12 months during which the unit first produces electricity, must continue to qualify throughout each calendar year ending after the later of 2005 or that 12-month period, and must meet the limitation on fossil-fuel use on a 3-year average basis during the first 3 years of operation starting no earlier than 2005 and every 3 years of operation thereafter.

Opt-in units. EPA is not finalizing the opt-in provisions that were discussed in the Transport Rule proposal. EPA proposed opt-in provisions to allow non-covered units to voluntarily opt in to any of the proposed Transport Rule trading programs and receive allocations reflecting 70 percent of the unit's emissions before opting in. These allowances were above the state-specific budgets developed under the Transport Rule to eliminate a state's significant contribution to nonattainment and interference with maintenance. In theory, an opt-in unit that makes reductions below its baseline and sells the freed-up allowances is effectively substituting its new, lower-cost reductions for higher-cost reductions otherwise required by a covered EGU, with the result that the state's significant contribution is still eliminated but at a lower total program cost.

EPA notes that theoretical benefits anticipated from allowing opt-ins did not materialize in prior trading programs with opt-in provisions. The Acid Rain Program has about 23 opt in units; the NO_X Budget Trading Program had five opt-in units; and no units opted into the CAIR programs. As a group, these opt-in units neither eased the achievement of required emission reductions in past trading programs, nor reduced overall program costs.

In the proposal, EPA requested comment on the opt-in provisions, specifically regarding: What are the benefits of and concerns about including opt-in provisions; how to ensure units are not credited for emission reductions the units would have made anyway; whether the proposed 30 percent reduction (*i.e.,* application of the 70 percent multiplier to baseline emissions) or some other percentage reduction, or no reduction, should be applied to the baseline emission rate used in determining allocations; and whether any additional percentage reduction (such as 45 percent) should be applied to SO_2 Group 1 opt-in units in Phase II to reflect the stricter limits for covered units.

Some commenters argued that increasing the Transport Rule budgets for opt-ins would undermine the goal of CAA section 110(a)(2)(D)(i)(I) to eliminate a state's significant contribution to nonattainment and interference with maintenance. One commenter stated that it does not favor allowing sources that are not subject to the emission reduction requirements to be issued allowances that would increase the overall state emission budgets, due to the uncertainty that any reductions made by such units would be surplus, verifiable, permanent and enforceable. This could compromise the integrity of the EGU emission reduction requirements of the Transport Rule and jeopardize assurance that a state's significant contribution would be eliminated, as required by the Court in *North Carolina.* Other commenters claim that, while no cheap tons are available from non-EGUs and EPA is right not to require non-EGU reductions, EPA should nonetheless allow non-EGUs to choose voluntarily to be covered by opting in.

As mentioned previously, the final Transport Rule does not include any opt-in provisions either in the FIPs or in the provisions allowing modification or replacement of the FIPs through submission of trading program provisions in SIPs. EPA has several reasons for not adopting provisions to allow opt-in units. First, as mentioned above, historically, very few units have opted in. As of 2010, 28 units out of more than 4,700 covered units (23 units out of a total of about 3,600 covered units in the Acid Rain Program and 5 units out of a total of about 2,600 covered units in the NO_X SIP Call) have opted in to EPA trading programs over the past 15 years. In the Acid Rain Program, 3 of the units opted in and

then, effective for 2005, opted out. Four of the units opted in, immediately shut down, and continue to receive allowance allocations. Four of the units opted in and continue to operate and receive allowance allocations. Finally, 12 of the units opted in, after CAIR was finalized, in order to receive allowances usable for compliance in the CAIR SO_2 trading program. Because CAIR will be replaced by this Transport Rule, EPA anticipates that these 12 units will opt out of the Acid Rain Program. In the NO_X Budget Trading Program, 3 plants with 5 opt-in units received allocations between 2003 and 2008.

Moreover, EPA has determined that the inclusion of opt-in units in the Transport Rule trading programs would undermine the rule's objective of addressing emissions in each state that significantly contribute to nonattainment or interfere with maintenance in other states. As explained above, EPA has established budgets plus variability limits that states must meet to ensure that the significant contribution to nonattainment and interference with maintenance identified by EPA is addressed. If EPA were to allow opt-ins, and if any opt-in unit were to receive an allocation of allowances for emissions that would be reduced even if the units did not opt in, then the inclusion of that opt-in unit in the program would allow the sources covered by the Transport Rule to emit in excess of the budget plus variability limit with no new, offsetting reduction in emissions. For example, after a unit would opt in, process or fuel changes made for economic reasons (rather than due to any regulatory requirements), or installation of new emission controls or fuel-switching conducted to meet future, non-Transport Rule regulatory requirements, could result in emission reductions that would have occurred ''anyway'' (*i.e.,* even if the unit had not opted in), and the opt-in unit would be allocated allowances for the portion of its baseline emissions that would be removed by these ''anyway'' reductions. Allocations above the cap to opt-in units making ''anyway'' emission reductions would convert these reductions into extra allowances (*i.e.,* authorizations to emit) usable by covered EGUs to meet their requirements to hold allowances for emissions. Because the extra EGU emissions authorized by these extra allowances would not be offset by any new emission reductions by the opt-in units, this could threaten a state's ability to eliminate the significant contribution to nonattainment and interference with maintenance identified by EPA in the final rule. Also, opt-in units, which are allocated allowances outside the state budget for covered units, could increase the possibility that a state's total emissions would exceed the state budget plus variability and thus that the assurance provisions would be triggered.

This problem of allocating allowances for emissions that would have been reduced anyway is illustrated by the recent promulgation of the final rule, National Emission Standards for Hazardous Air Pollutants for Major Sources: Industrial, Commercial, and Institutional Boilers and Process Heaters (76 FR 15608 (March 21, 2011)) (''final Boiler MACT rule''), which requires certain industrial, commercial, and institutional boilers to meet maximum achievable control technology (MACT) standards for emissions of specified hazardous air pollutants, such as hydrogen chloride (HCL) and mercury (Hg). Some of the control technologies that can be used to meet these standards will also provide significant reductions of SO_2 emissions. For example, a boiler may use a wet scrubber or the combination of a dry sorbent injection system and a fabric filter (among other options) to meet the applicable HCL standard or may use a wet scrubber or a combination of activated carbon injection and a fabric filter (among other options) to meet the applicable Hg standard. *See* 76 FR 15614 (describing testing and compliance requirements when such controls are used to meet these standards); and Memo from Brian Shrager to Amanda Singleton and Graham Gibson, *Revised Methodology for Estimating Cost and Emissions Impacts for Industrial, Commercial and Institutional Boilers and Process Heaters National Emissions Standards for Hazardous Air Pollutants—Major Source* (February 11, 2011), Document ID EPA–HQ–OAR–2009–0491–4036 (section 3.1, describing control options for HCL and Hg control). In fact, EPA estimated that the new standards would result in emission reductions of not only the hazardous air pollutants directly subject to the standards, but also in other air pollutants such as SO_2. Specifically, EPA projected that compliance with the final Boiler MACT rule standards will result in about 431,000 tons of annual SO_2 reductions from existing boilers subject to the final Boiler MACT rule. This will comprise on average about a 46 percent reduction in SO_2 emissions for this group of boilers. Coal- and oil-fired boilers—which are the boilers likely to have the most uncontrolled SO_2 emissions and so would be the most likely types of units to consider opting into the Transport Rule trading programs if opting-in were allowed—are projected to reduce about 409,000 tons of annual SO_2 as a result of complying with the final Boiler MACT rule, or about a 50 percent reduction in SO_2 emissions. *See* Memo from Brian Shrager to Amanda Singleton and Graham Gibson, Appendix B–1, (where column CE represents baseline SO_2 emissions and column CH represents SO_2 reductions resulting from the final Boiler MACT rule compliance). The amount of offsetting SO_2 increases projected to result from final Boiler MACT rule compliance, *e.g.,* from additional fuel being combusted to generate electricity to operate emission controls, is minor. *See* 76 FR 15651 (Table 4) and 15653 (showing projected total SO_2 reductions for all boilers and process heaters of about 442,000 tons and net SO_2 reductions of about 440,000 tons).

Consequently, a boiler subject to the final Boiler MACT rule may install a wet acid gas scrubber or a bag house in order to meet the HCL or Hg standard applicable to boilers under the final Boiler MACT rule and thereby achieve SO_2 emission reductions. If that boiler were to opt in to one of the Transport Rule SO_2 trading programs during the year before installing these controls to comply with the final Boiler MACT rule, then the boiler would be allocated allowances for the unit's current tons of SO_2 emissions and would not need to use these allowances for compliance under the Transport Rule once the final Boiler MACT-related controls were installed. The allowances allocated to the boiler would be additional allowances above the Transport Rule trading budget for the state where the boiler was located. As a result, the boiler would have freed-up allowances above the state trading budget that represent reductions that the boiler would have made anyway (*i.e.,* even if the boiler had not opted in) and that could be sold to EGUs covered by the Transport Rule. In effect, the opting-in of the boiler would result in the conversion of the boiler's SO_2 reductions from the final Boiler MACT rule into increased emissions above the state trading budget from EGUs subject to the Transport Rule.

Commenters addressed this issue. For instance, one commenter suggested that SO_2 reductions made by a boiler under the final Boiler MACT rule should be eligible for opt-in provision allowances under the Transport Rule trading programs. Another commenter stated that, given the uncertainty that reductions made by opt-in units would be surplus, verifiable, permanent, and enforceable, opt-in provisions could

compromise the integrity of the EGU emission reductions.

For the reasons explained above, EPA agrees with the latter commenter. Further, EPA notes that none of the commenters supporting adoption of the opt-in provisions suggested any revision to the proposed opt-in provisions that would address this problem. While the proposed opt-in provisions would limit an opt-in unit's allocation for a control period by calculating the allocation using the lesser of the unit's pre-opt-in SO_2 emission rate or the most stringent SO_2 emission rate applicable in that control period, this would not address SO_2 rate reductions that are not directly required by the final Boiler MACT rule but that are a secondary result of using and operating certain emission controls installed to comply with the HCL or Hg standards under the final Boiler MACT rule. Because the secondary SO_2 reductions will vary depending on the type of controls installed and on the extent to which the controls are used, and a boiler may use a combination of emission controls and other approaches to reduce HCL or Hg emissions (such as fuel switching), EPA believes that it is highly unlikely that opt-in provisions could prevent allocation for ''anyway'' emission reductions resulting from compliance with the final Boiler MACT rule. EPA therefore believes that the final Boiler MACT rule provides a concrete example of why adoption of opt-in provisions could undermine the rule's objective of addressing emissions in each state that significantly contribute to nonattainment or interfere with maintenance in other states. EPA notes that the final Boiler MACT rule, of course, is simply one example of how allocations for ''anyway'' reductions could occur and undermine the statutory requirements of the Transport Rule.

C. Compliance Deadlines

1. Alignment With NAAQS Attainment Deadlines

The compliance dates in the final Transport Rule are aligned with the attainment deadlines for the relevant NAAQS and consistent with the charges given to EPA by the Court in *North Carolina.* EPA proposed to require, and the final rule requires, compliance by 2014 with an initial phase of reductions in 2012.[57] Sources are required to comply with annual SO_2 and NO_X requirements by January 1, 2012 and January 1, 2014 for the first and second phases, respectively. Similarly, sources are required to comply with ozone-season NO_X requirements by May 1, 2012, and by May 1, 2014. In selecting these dates, EPA was mindful of the NAAQS attainment deadlines which require reductions as expeditiously as practicable and no later than specified dates (see 42 U.S.C. 7502(a)(2)(A) (general attainment dates); 42 U.S.C. 7511(a)(1) (attainment dates for ozone nonattainment areas)), and also mindful of the court's instruction to ''decide what date, whether 2015 or earlier, is as expeditious as practicable for states to eliminate their significant contributions to downwind nonattainment.'' *North Carolina,* 531 F.3d at 930.

1997 $PM_{2.5}$ NAAQS Attainment Deadlines. For all areas designated as nonattainment with respect to the 1997 $PM_{2.5}$ NAAQS, the deadline for attaining that standard is as expeditious as practicable but no later than April 2010 (5 years after designation), with a possible extension to no later than April 2015 (10 years after designation).[58] Many areas have already come into attainment by the April 2010 deadline due in part to reductions achieved under CAIR. The fact that the 2010 deadline will have passed before the Transport Rule is finalized emphasizes the importance of obtaining reductions as expeditiously as practicable. In addition, reductions achieved in upwind states by the 2014 emissions year will help downwind states demonstrate attainment by the April 2015 deadline.

2006 $PM_{2.5}$ NAAQS Attainment Deadlines. For all areas designated as nonattainment with respect to the 2006 24-hour $PM_{2.5}$ NAAQS, the attainment deadline must be as expeditious as practicable but no later than December 2014. Areas that fail to meet that deadline can request an extension to as late as December 2019.

Upwind emission reductions achieved by the 2014 emissions year will help meet the December 2014 attainment deadline. In addition, the first phase of reductions in 2012 will help many areas attain in a more expeditious manner.

Further, a deadline of January 1, 2014 also provides adequate and reasonable time for sources to plan for compliance with the Transport Rule and install any necessary controls. EPA believes that this deadline is as expeditious as practicable for the installation of the controls, if any, needed for compliance with the 2014 state emission budgets. (*See* further discussion in section V.C.2.)

1997 Ozone NAAQS Attainment Deadlines. Ozone nonattainment areas must attain permissible levels of ozone ''as expeditiously as practicable,'' but no later than the date assigned by EPA in the ozone implementation rule. 40 CFR 51.903. The areas designated nonattainment in 2004 with respect to the 1997 8-hour ozone NAAQS in the eastern United States were assigned maximum attainment dates effectively corresponding to the end of the 2006, 2009, and 2012 ozone seasons. The maximum attainment deadlines for the 1997 standard run from the June 15, 2004 effective date of designation for that standard. The time periods are based on the time periods provided for these classifications in section 181 of the Act, 45 U.S.C. 7511(a). However, instead of running from the 1990 date of enactment of the CAA as specified in section 181, our regulation provides that they run from the date of designation. An area's maximum attainment date is based on its nonattainment classification—that is, whether it is classified as a marginal, moderate, serious, severe, or extreme ozone nonattainment area. Marginal areas have three years from designation to attain the standard. Moderate, serious, severe, and extreme areas have 6, 9, 15, and 20 years, respectively. The maximum attainment deadlines associated with the 1997 ozone standards are June 15, 2007 for marginal areas, June 15, 2010 for moderate areas, and June 15, 2013 for serious areas. Because the actual deadline occurs in the middle of an ozone season, data from that ozone season is not considered when determining whether the area has attained by the deadline. Thus, these maximum attainment deadline dates effectively correspond with the end of the 2006, 2009, and 2012 ozone seasons. Reductions achieved or air quality improvements realized after those dates will not help the areas meet their maximum attainment deadlines.

Many areas have already attained the standard due in part to CAIR, federal

[57] For the annual programs, sources are required to have, by March 1, 2013, sufficient allowances in their accounts to cover their 2012 emissions. For the ozone-season program, they must have allowances in their accounts by December 1, 2012 to cover 2012 ozone-season emissions. The state budgets which determine the number of allowances allocated to units in each state become more stringent for some states in 2014.

[58] Section 172(a)(2) of the Clean Air Act provides that the attainment dates for areas designated nonattainment with a NAAQS shall be the date by which attainment can be achieved as expeditiously as practicable, but no later than 5 years from the date of designation. This section also allows the Administrator to extend the attainment date to the extent she determines appropriate, for a period no greater than 10 years from the date of designation as nonattainment, considering the severity of nonattainment and the availability and feasibility of pollution control measures. Designations for the 1997 $PM_{2.5}$ NAAQS became effective on April 5, 2005. Designations for the 2006 24-hour $PM_{2.5}$ NAAQS became effective on December 14, 2009.

mobile source standards, and other local, state, and federal measures. Other areas, however, have been reclassified to a higher classification either because they failed to attain by their attainment date or because the state requested reclassification to avoid missing an attainment date. Those that have not yet attained the standard now have maximum attainment dates ranging from June 2011 (these are the moderate areas that have been granted a 1-year extension due to clean data for the 2009 ozone season) to June 2024. The areas classified as ''serious'' nonattainment areas have a June 2013 maximum attainment deadline. Areas that missed their earlier deadlines and have been reclassified as ''severe'' or ''extreme'' nonattainment areas now have maximum nonattainment deadlines of June 2019 and June 2024 respectively. As explained above, an area with a June 2013 deadline would need to attain based on ozone data from the 2010–2012 ozone seasons, an area with a June 2019 deadline would need to attain based on ozone data from the 2016–2018 ozone seasons, and an area with a June 2024 deadline would need to attain based on ozone data from the 2021–2023 ozone seasons.

The Transport Rule's first phase of reductions in 2012 will help the remaining areas with June 2013 maximum attainment deadlines attain the 1997 8-hour ozone NAAQS by their deadline. If EPA determines that an area failed to attain by the 2013 deadline, the area would be reclassified to severe and would be subject to the more stringent emission control requirements that apply to the severe classification. The reductions will also help areas with later deadlines attain as expeditiously as practicable and improve air quality in those areas.

2012 Interim Compliance Deadline. EPA is requiring an initial phase of reductions starting in 2012. These reductions are necessary to ensure that significant contribution to nonattainment and interference with maintenance are eliminated as expeditiously as practicable and in time to help states meet their attainment deadlines. As the court emphasized in *North Carolina*, the significant contribution to nonattainment and interference with maintenance from upwind states must be eliminated as expeditiously as practicable to help downwind states to achieve attainment as expeditiously as practicable as required by the CAA. Further, reductions are needed by 2012 to help states attain before the June 2013 maximum attainment date for ''serious'' ozone nonattainment areas, to ensure states attain as soon after the original April 2010 attainment deadline for the 1997 $PM_{2.5}$ NAAQS, and to help states attain before the December 2014 attainment deadline for the 2006 $PM_{2.5}$ NAAQS.

In addition, because this final rule will replace CAIR, EPA could not assume that after this rule is finalized, EGUs would continue to emit at the reduced emission levels achieved by CAIR. Instead, it is the emission reduction requirements in the proposed FIPs that will determine the level of EGU emissions in the eastern United States. For this reason also, EPA concludes that it is appropriate to require an initial phase of reductions by 2012 to ensure that existing and planned SO_2 and NO_X controls operate as anticipated.

Addressing the Court's Concern about Timing. As directed by the Court in *North Carolina*, 531 F.3d 896, and as described previously, EPA established the compliance deadlines in the Transport Rule based on the respective NAAQS attainment requirements and deadlines applicable to the downwind nonattainment and maintenance sites.

The 2012 deadline for compliance with the limits on ozone-season NO_X emissions is necessary to ensure that states with June 2013 maximum attainment deadlines get the assistance needed from upwind states to meet those deadlines. The 2012 deadline for compliance with the limits on annual NO_X and annual SO_2 emissions is necessary to ensure attainment as expeditiously as practicable in areas which failed to attain by the 2010 attainment deadline for the 1997 $PM_{2.5}$ NAAQS and had to request an extension to 2015.

Similarly, the 2014 deadline for compliance with the limits on annual NO_X and annual SO_2 emissions is necessary to ensure that downwind states get the benefit of upwind reductions prior to the December 2014 maximum attainment deadline for the 2006 $PM_{2.5}$ NAAQS. It is also necessary to ensure reductions occur in time to assist with attainment in downwind areas that received the maximum 5-year extension of the 5-year attainment deadline for the 1997 $PM_{2.5}$ NAAQS (taking into account the need for reductions by 2014 to demonstrate attainment by April 2015).

The 2012 compliance deadline for the first-phase of annual NO_X and annual SO_2 emission reductions will assure the reductions are achieved as expeditiously as practicable. A significant amount of the emissions identified as significantly contributing to nonattainment or interfering with maintenance in other states can be eliminated by 2012. EPA believes it is appropriate to do so in light of the court's direction to EPA to ensure states eliminate such emissions as expeditiously as practicable. *North Carolina* 531, F.3d at 930. Given the time needed to design and construct scrubbers at a large number of facilities, EPA believes the 2014 compliance date is as expeditious as practicable for the full quantity of SO_2 reductions necessary to fully address the significant contribution to nonattainment and interference with maintenance. Requiring reductions in transported pollution as expeditiously as practicable, as well as within maximum deadlines, helps to promote attainment as expeditiously as practicable. This is consistent with statutory provisions that require states to adopt SIPs that provide for attainment as expeditiously as practicable and within the applicable maximum deadlines.

b. Public Comments and EPA Responses

EPA received numerous comments on the proposed compliance dates. A number of commenters supported EPA's compliance schedule and rationale. Other commenters supported extending the compliance deadlines to later dates.

Many commenters questioned the technical feasibility of achieving the required reductions by the 2012 and 2014 dates. EPA's responses to those comments are discussed below in section VII.C.2.

Other commenters provided policy and legal arguments for allowing states to develop SIP alternatives to the FIP, and to build time for that SIP development and review process into the compliance schedule. For example, some commenters asserted that the requirement in the CAA for providing reductions ''as expeditiously as practicable'' must be balanced with CAA provisions allowing states to develop state implementation plans prior to EPA imposing FIPs. EPA responses to those comments are discussed in section X.

Some commenters suggested that EPA had the ability to leave CAIR in place for a transition period, and by doing this EPA could allow for a longer compliance period for this rule. EPA does not believe it would be appropriate, in light of the Court's decision in *North Carolina*, to establish a lengthy transition period to the rule that will replace CAIR. Although the Court decided on rehearing to remand CAIR without vacatur, the Court stressed its prior decision that CAIR was deeply flawed and EPA's obligation to remedy those flaws. *North Carolina*, 550

F.3d 1176. Although the Court did not set a definitive deadline for corrective action, the Court took care to note that the effectiveness of its opinion would not be delayed ''indefinitely'' and that petitioners could bring a mandamus petition if EPA were to fail to modify CAIR in a manner consistent with its prior opinion. *Id.* Given the Court's emphasis on remedying CAIR's flaws expeditiously, EPA does not believe it would be appropriate to establish a lengthy transition period to the rule which is to replace CAIR.

As relates to $PM_{2.5}$, EPA received a number of comments on its proposal to include a 2012 deadline to ensure that emission reductions needed to reduce $PM_{2.5}$ be achieved ''as expeditiously as practicable.'' Some commenters supported EPA's 2012 deadline. Other commenters believed that it was unnecessary and unwarranted for EPA to impose emission reduction requirements in advance of the 2014 attainment date. In light of the 2014 five-year attainment date for the 2006 $PM_{2.5}$ NAAQS (with a possible extension to 2019), and the possible extension to April 2015 for the 1997 $PM_{2.5}$ NAAQS, these commenters believed EPA's 2012 emission reduction requirements for annual $PM_{2.5}$ and NO_X were not necessary. EPA disagrees with these commenters, for a number of reasons. First, EPA notes (supported by commenters) that there is a clear statutory obligation to attain ''as expeditiously as practicable.'' Second, EPA notes that there are feasible reductions available by 2012. Third, EPA believes that the substantial health and environmental benefits achieved by the rule underscore the importance of achieving the reductions as soon as possible.

With respect to ozone, some commenters noted that the proposed rule required ozone reductions by 2012 for states impacting areas which EPA's analysis shows will attain the 1997 ozone NAAQS by 2014 without further controls. Those commenters questioned the importance of getting reductions in such states and whether the 2012 deadline is necessary. EPA disagrees with those comments. Except for Houston, all ozone areas within the region addressed by this rule have attainment dates no later than 2013. In effect, this means that emission reductions needed to attain the 1997 ozone NAAQS must be in place by the 2012 ozone season. EPA believes that if there are reductions available by 2012, and those emission reductions have in fact been identified, it is appropriate and necessary to ensure that those reductions are in place.

2. Compliance and Deployment of Pollution Control Technologies

The power industry will undertake a diverse set of actions to comply with the Transport Rule at the start of 2012 and another set of actions when companies in Group 1 states comply with more stringent SO_2 budgets at the start of 2014. In 2012, the industry will largely meet the rule's NO_X requirements by: Operating an extensive existing set of combustion and post-combustion controls on fossil fuel-fired generators; dispatching lower emitting units more often; and installing and operating a limited amount of relatively simple NO_X pollution controls in states not previously subject to CAIR. For the SO_2 requirements, EPA anticipates at a minimum that coal-fired generators will operate the substantial capacity of advanced pollution controls already in place or scheduled for 2012 use; some units will also elect to burn lower-sulfur coals; and the fleet will increase dispatch from lower-sulfur-emitting units as well as from natural gas-fired generators. EPA provides a more detailed explanation below of how fuel switching to lower sulfur coals factored in to the design of the final Transport Rule.

By 2014, EPA's budgets under the Transport Rule will sustain previous NO_X and SO_2 reductions as well as account for reductions from additional advanced NO_X and SO_2 controls that are driven by other state and federal requirements. In addition to these reductions, companies in Group 1 states are also projected to add a limited amount of advanced SO_2 controls in 2014 that will be discussed below.

EPA's expectations are supported by the IPM analysis reported in this rule's RIA (see Chapter 7). Notably, since EPA has established a cap and trade control system for lowering NO_X and SO_2 emissions, individual owners and operators of covered units have some flexibility in meeting the program's requirements as needed and are free to find alternative ways to comply. The RIA clearly shows a viable known pathway for owners and operators to comply at reasonable costs, although it is not the only compliance pathway possible under this flexible regulation that could deliver the emission reductions required under the rule. Notably, by 2014 and beyond, the power industry may also augment the projected compliance efforts with programs aimed at improving energy efficiency.

Table VII.C.2–1—shows EPA's projection of the amount of existing coal-fired generating capacity in gigawatts (GW) that may retrofit various systems for compliance with this rule.

TABLE VII.C.2–1—PROJECTED POTENTIAL AIR POLLUTION CONTROL (APC) RETROFITS FOR TRANSPORT RULE [59]

Capacity retrofitted by	Wet FGD	Dry FGD	DSI	SCR	LNB/OFA improvements
January 1, 2012					10 GW
January 1, 2014	5.7 GW	0.2 GW	3.0 GW	0 GW.	

EPA received proposal comments expressing a concern about the feasibility of deploying retrofit air pollution control (APC) technologies in the time frames available between the final date of this rule and the compliance dates. As discussed below, EPA believes that it is feasible for the electric power sector and its APC supply chain to either make most of the projected retrofits in time to meet the 2012 and 2014 compliance deadlines, or to comply by other means.

a. 2012 Power Industry Compliance

EPA's analysis of emission reductions available in 2012 assumes year-round operation of existing post-combustion pollution controls in states covered for $PM_{2.5}$ and ozone-season operation of NO_X post-combustion controls in states covered for ozone. EPA also modeled emission reductions available in 2012 at the $500/ton threshold for SO_2, $500/ton for annual NO_X, and $500/ton for ozone-season NO_X.

For SO_2, EPA believes that reductions associated with the following methods of control are available and will be used

[59] GW: Gigawatts of capacity retrofitted; FGD: Flue gas desulfurization (SO_2 control); DSI: Dry sorbent injection (SO_2 control); SCR: Selective catalytic reduction (NO_X control); LNB/OFA: Low-NO_X burner and/or overfire air (NO_X controls).

as compliance strategies to meet the 2012/2013 budgets: (1) Operation of existing controls year-round in $PM_{2.5}$ states, (2) operation of scrubbers that are currently scheduled to come online by 2012, (3) some sources switching to lower-sulfur coal (see section VII.C.2.c that follows), and (4) changes in dispatch and generation shifting from higher emitting units to lower emitting units. EPA modeling and selection of a $500/ton cost threshold includes all existing and planned controls operating year round (items 1 and 2). It also reflects an amount of coal switching and generation shifting that can be achieved for $500/ton. This set of expected actions was confirmed in the detailed modeling of EPA's final remedy in the RIA and can be reviewed there.

The power sector is already strongly positioned to achieve the Transport Rule state budgets presented in section VI.D through at least three distinct strategies. First, the sector will optimize its use of the large proportions of advanced pollution controls already present throughout the fleet. Second, the sector will take advantage of the substantial new pollution control technology that is already on the way for deployment by 2012. Third, the remainder of the fleet will flexibly adopt the most economic low-emitting fuel mix available at each unit to deliver cost-effective emission reductions complementing the reductions achieved from optimized use of the fleet's pollution control technology. The state maps in Chapter 7 of this rule's Regulatory Impact Analysis demonstrate how these emission reduction strategies for 2012 will build off of the sector's historic trend toward cleaner generation profiles. Also, the detailed unit-level projection files from EPA's IPM power sector modeling of the Transport Rule remedy (found in the docket for this rulemaking) show how EGUs adopt these strategies to not only reach the 2012 budgets, but in fact in many states overcomply with the budgets and build up a bank of allowances under the programs for future flexibility.

The following paragraphs illustrate the degree to which the existing fleet is already prepared to adopt these emission reductions in 2012 in order to attain the required emission reductions for SO_2, annual NO_X, and ozone-season NO_X under the Transport Rule. More specifically, the illustrative paragraphs demonstrate emission reduction pathways for coal capacity to optimize or increase operation of existing control technology, timely implement existing plans to bring additional control technology on line, and to cost-effectively make use of lower-emitting fuel alternatives.

Of the 240 GW of coal capacity in the Transport Rule region covered for fine particles, approximately 110 GW—more than 45 percent—had existing advanced pollution control for SO_2 already in place in 2010, including scrubbers (FGD), dry sorbent injection (DSI), or circulating fluidized bed boilers. Of this controlled coal capacity, EPA expects a significant portion will improve emission rates through either increased use of control technology and/or additional fuel switching. EPA notes that an additional 39 GW of advanced SO_2 controls in the region are scheduled to come online over the 2010–2012 timeframe and will also assist in meeting 2012 emission reduction requirements. Thus, by 2012 more than half of affected coal capacity—152 GW—will be operating with advanced SO_2 control equipment. Additionally, EPA expects approximately 40 GW of uncontrolled coal capacity in the region to take advantage of the existing coal supply infrastructure, possibly switching coal use or coal blending behaviors to make cost-effective reductions in SO_2 emission rates where economic to respond to the Transport Rule 2012 emission reduction requirements.

EPA notes that approximately 136 GW of the 240 GW—more than 56 percent—of coal capacity in the Transport Rule region covered for fine particles had existing advanced pollution control for NO_X already in place in 2010, including selective catalytic reduction (SCR), selective non-catalytic reduction (SNCR), or circulating fluidized bed boilers. Of this capacity, EPA anticipates a significant portion will improve their NO_X emission rate through increased operation of these existing controls. Additionally, EPA notes that an additional 21 GW of SCR and 4 GW of enhanced combustion controls (including low-NO_X burners and overfire air) are scheduled to come online in the region during the 2010–2012 timeframe, bringing the total region's coal capacity operating with NO_X emission reduction technology to 158 GW (more than 65 percent of total coal capacity in the Transport Rule fine particle region). EPA also projects that approximately 13 GW of coal capacity will make some reduction in their NO_X emission rates by enhancing performance of existing combustion controls or SNCR, or by fuel switching.

In the Transport Rule states covered under the ozone-season program, approximately 145 GW of the 260 GW (more than 55 percent) of coal capacity had existing NO_X control technology in place in 2010. EPA expects a significant portion of that capacity to achieve emission reductions during the 2012 ozone-season through improved operation of SCR. Additionally, in the Transport Rule ozone region there will be approximately 21 GW of additional advanced NO_X control installations and 7 GW of additional combustion control improvements or installations coming online during the 2010 to 2012 time frame. EPA projects that 17 GW of coal capacity in the Transport Rule ozone region will reduce NO_X emission rates by enhancing performance of existing combustion controls or SNCR or by fuel switching.

For NO_X, EPA has also concluded that it is appropriate to require reductions through a limited amount of combustion control improvements, and in some cases, retrofits such as low-NO_X burners (LNB) and/or overfire air (OFA). EPA recognizes that the 6-month time frame between rule finalization and start of the first compliance period would not allow for the installation of a major post-combustion NO_X control such as SCR. Assumed improvements and retrofits for the January 1, 2012 deadline for annual NO_X reductions therefore only involve the much simpler LNB/OFA control modifications or installations. Alternatively, some plant owners might choose to achieve NO_X reductions in a similar time period through an even simpler retrofit—SNCR.[60]

Although the improvements, and in some cases, installation of combustion controls would be an economic means of achieving emission reductions, these specific controls are not required for compliance purposes under the final Transport Rule remedy. Individual sources may comply through other measures (such as purchasing additional allowances) in the event that it takes more than 6 months for installation of a given combustion control. The vast majority of covered sources already have combustion controls installed; therefore, the NO_X reductions associated with these incremental control improvements and installations are small.

[60] David L. Wojichowski, SNCR System—Design, Installation, and Operating Experience *http://www.netl.doe.gov/publications/proceedings/02/scr-sncr/wojichowski-1.pdf.*

Based on the Transport Rule's geography, EPA estimates that approximately 10 GW of coal-fired units may improve, and in some cases, install LNB/OFA specifically in reaction to the Transport Rule NO_X caps. EPA reflects the effects of these installations in the 2012 annual and ozone-season NO_X budgets, which would yield reductions of approximately 28,000 tons of annual NO_X and 14,000 tons of ozone-season NO_X. EPA assumes these controls are cost effective at $500/ton and that they should be incentivized through budgets given the 2013 attainment deadline for ozone areas classified as ''serious.'' Once installed, LNB/OFA operates any time the boiler is fired and thus yields NO_X reductions beyond the ozone season alone.

In the proposal's LNB technical support document,[61] EPA observes that LNB and/or OFA installations, burner modifications, or other NO_X reduction controls would likely have to be installed during fall 2011 or spring 2012 outages in order to achieve significant reductions for 2012. While this 6-month schedule is aggressive, industry has shown that it can be met. For example, Limestone Electric Generating Station Unit 2, an 820 MW tangentially-fired lignite unit, was retrofitted with Foster Wheeler's Tangential Low NO_X (TLN3) system in less than six months, including engineering, fabrication, delivery and installation.[62] Harlee Branch Unit 4, a 535 MW cell-fired unit, was retrofitted with Riley Power's low-NO_X Dual Air Zone CCV burners on a similar schedule.[63] These are tangentially-fired and wall-fired units, respectively, representative of the unit types that might make LNB/OFA improvements for compliance with this rule. Although such 6-month schedules can be achieved on some units, under favorable circumstances, historical projects suggest a more typical schedule would be 12 to 16 months for the contractor's portion of the work.[64] A plant owner's project planning and procurement work in advance of a contract award would typically involve several additional months. On the other hand, there are other approaches that can also be implemented in a short time frame to achieve significant NO_X reduction. As mentioned above, relatively simple SNCR systems can be installed quickly; and the re-tuning or upgrading of existing combustion control systems can often provide significant NO_X reductions and can be performed quickly.[65]

As stated above, EPA believes that LNB/OFA modifications or retrofits would be possible during the 6-month interim between rule signature and the start of the first compliance period, particularly for those ''early movers'' who have initiated LNB projects based on the proposed rule. However, as shown in Table VII.C.2–2, below, even if all LNB modifications or installations are delayed until the beginning of the 2012 ozone season, the reductions only represent 1 percent of most covered states' annual NO_X budgets, and no more than 11 percent of any affected state's annual NO_X budget. Under such a scenario, these delayed reductions would still be well within the 18 percent variability limit applied to each state's annual NO_X budget. In light of this limited consequence and the supporting material above, EPA includes LNB-driven NO_X reductions in both annual and ozone-season NO_X budgets for 2012.

TABLE VII.C.2–2—EARLIEST REDUCTIONS ASSUMED FROM LNB INSTALLATIONS IN THE TRANSPORT RULE STATES SUBJECT TO THE ANNUAL NO_X PROGRAM *

	NO_X reductions from LNB operation from January–April (tons)	Annual NO_X state budget (tons)	Percent of budget met by earliest LNB reductions (percent)
Georgia	646	62,010	1
Iowa	567	38,335	1
Kansas	2,131	30,714	7
Minnesota	2,303	29,572	8
Nebraska	3,008	26,440	11
Region-wide Total	8,656	1,245,869	1

* Based on EPA IPM Analysis of Final Transport Rule.

b. 2014 Power Industry Compliance

EPA projects that compliance with 2014 requirements for NO_X will result largely from operation of existing and future controls required by state and other federal requirements, as well as the appropriate dispatch of the electric generation fleet. EPA does not project additional NO_X pollution control retrofits aside from about 10 GWs of combustion control improvements or retrofits projected for the 2012 compliance period. To comply with the rule's SO_2 requirements, EPA projects that the power industry will rely on existing controls, operate newly installed advanced controls necessary for other binding state and federal requirements, rely more on relatively lower sulfur coals, and dispatch lower-emitting generation units. In Group 1 states, industry is projected to increase switching to lower sulfur coals and install a limited amount of additional scrubbers and other advanced pollution control technology. EPA's assessment of the industry's ability to install SO_2 pollution controls in 2014 and undertake the projected coal switching follows below.

EPA's modeling of least-cost compliance with the state budgets under the Transport Rule projects approximately 5.9 GW of FGD systems and lesser amounts of other technologies will be retrofitted by 2014

[61] Technical Support Document (TSD) for the Transport Rule, Docket ID No. EPA–HQ–OAR–2009–0491, Installation Timing for Low NO_X Burners (LNB).

[62] R. Pearce, J. Grusha, Reliant Energy Tangential Low NO_X System at Limestone Unit 2 Cuts Texas Lignite, PRB and Pet Coke NO_X, *http://www.fwc.com/publications/tech_papers/files/tp_firsys_01_02.pdf.*

[63] B. Courtemanche, *et al.,* Reducing NO_X Emissions and Commissioning Time on Southern Company Coal Fired Boilers With Low NO_X Burners and CFD Analysis, *http://www.babcockpower.com/pdf/t-182.pdf.*

[64] M. O'Donnell, Babcock & Wilcox Company, (personal communication with EPA staff, February 22, 2011).

[65] N.C Widmer, et al., Coal Power, October 8, 2009, *http://www.coalpowermag.com/ops_and_maintenance/Zonal-Combustion-Tuning-Systems-Improve-Coal-Fired-Boiler-Performance_226.html.*

for compliance with the Transport Rule.[66] [67] EPA's schedule assumptions for these larger more complex projects were developed in an earlier study and mentioned in the proposal: 27 months for retrofitted wet FGD and 21 months for SCR.[68] Note that a dry FGD system, due to its relatively simpler configuration and lesser cost, would typically take somewhat less time to retrofit than wet FGD.

As discussed below, EPA believes that its schedule assumptions remain reasonable expectations for sources that have completed most of their preliminary project planning and can quickly make commitments to proceed. These schedules do not include the extensive time that some plant owners might spend in making a decision on whether or not to retrofit. They do include the time needed to make a final confirmation of the type of technology to be used at a particular site, to prepare bid requests, award contracts, perform engineering, obtain construction and operating permits (in parallel with project activities), perform construction, tie-in to the existing plant systems, and perform integrated systems testing.

EPA received comments on the proposed rule indicating that some past single-unit APC retrofits had considerably longer schedules, with a few exceeding 48 months. EPA engineering staff have extensive experience with power plant and APC system design, construction, and operation. Based on that experience, EPA can observe that in the absence of a compelling deadline or major economic incentive, many large project schedules are considerably longer than necessary. Given further observations as explained below, EPA believes it is reasonable to expect that almost all future APC retrofits can be completed far more quickly than they were in recent history. EPA's perspective on this matter derives in part from a comparison of longer APC schedules (as provided by some commenters) to the project schedule for an entire new coal-fired unit, including its APC systems. Springerville Unit 3, for example, is a new 400 MW subbituminous coal-fired unit with SCR and dry FGD that became operational in July 2006, some 33 months after the turnkey engineering-construction contractor was given a notice to proceed with engineering.[69] Springerville was clearly on an accelerated schedule, as its original planned schedule was about 38 months. Another example is Dallman Unit 4, a high-sulfur bituminous coal-fired 200 MW unit with SCR, fabric filter, wet FGD, and wet ESP. Dallman Unit 4 was first synchronized in May 2009, several months ahead of schedule, and about 36 months after its turnkey contractor placed initial major equipment orders.[70] The main point here is that recent APC project schedules, and those of large complex power projects, can be significantly accelerated. Because the scope and complexity of the work involved for an entire new coal unit and its APC systems is perhaps five times greater than that of a retrofit wet FGD system alone, EPA believes it is reasonable to expect that even the most complex retrofit APC project can be significantly accelerated as well. Additional factors are discussed below that further support the feasibility of installing by 2014 the 5.9 GW of FGD retrofits projected for this rule.

Although IPM modeling provides reliable estimates on a regional basis, and cannot be as accurate at the level of individual plants or units, it is informative and relevant to consider IPM's plant level projections in this case. Although the IPM-projected retrofits named below may not actually occur, IPM projects that they would be economic and would allow industry to meet the tighter SO_2 emission standards in Group 1 states in 2014. EPA notes that the owners of the particular plants mentioned below (Duke Energy, AEP, Edison International) are large, experienced, versatile utilities that have done considerable advance planning and should also have above-average flexibility to comply with state budgets across their fleets. EPA would expect such owners to have relatively little difficulty in permitting and financing FGD retrofits.

Of the Transport Rule-related FGD retrofits, 0.2 GW is projected to use dry FGD, which EPA expects to be simpler and quicker to install than wet FGD. Half of the 5.9 GW (Muskingum, Rockport) has already been committed under consent decrees to add controls or retire;[71] and EPA reasonably believes that significant preliminary project planning work has already been done for those projects. An additional 1,200 MW (Homer City) had completed project planning and was ready to proceed in 2007, before putting the project on hold.[72] The latter plant is now facing EPA legal action and the possibility of a required expeditious FGD retrofit.[73] Thus, of the 5.9 GW of projected FGD retrofits resulting from this rule, nearly 75 percent appears to be in good position for an early start of construction, and over 3 GW of that would be bringing forward already committed compliance start dates.

Any of the above mentioned potential retrofits or any other unit that might choose to retrofit FGD for a January 2014 compliance date will likely have to use various methods to accelerate the project schedule. Such methods could include the use of parallel permitting, overtime and/or two-shift work schedules during construction, and 5- or 6-day work weeks instead of the 4-day × 10-hour schedules often used to minimize cost when time is not of the essence. Increased use of offsite modularization and pre-fabrication of APC components could also shorten schedules and reduce job hours.

EPA believes that the January 1, 2014 compliance date is as expeditious as practicable for the sources installing large, complex control systems. The following additional observations support EPA's expectation that the limited 5.9 GW of FGD retrofits can be realized in the 30 month interim between rule signature and the start of 2014:

- There are documented instances of large, complex wet FGD retrofits being deployed in less than 30-months (excluding the time for owners' project

[66] Nearly all of the 5.9 GW of FGD retrofits are comprised by some 12 units at 7 plants (Beckjord, Muskingum River, Homer City, Rockport, Kammer, Danskammer, and Will County).

[67] As noted elsewhere in this preamble, the projected impacts of this final rule presented in the preamble do not reflect minor technical corrections to SO_2 budgets in three states (KY, MI, and NY) and assumed preliminary variability limits that were smaller than the variability limits finalized in this rule. EPA conducted sensitivity analysis factoring in these corrections; the results of this analysis include a small increase of about 700 MW of additional wet FGD retrofit projected for 2014. This projected additional retrofitting capacity is already required to retrofit under a consent decree and should therefore have already conducted advanced retrofit planning. EPA therefore believes that this incremental projected retrofit behavior (factoring in the technical corrections made after the main impact analyses were conducted) is feasible by 2014 for the same reasons presented in this section regarding the projected retrofit behavior from the main analysis of the final rule.

[68] EPA, Engineering and Economic Factors Affecting the Installation of Control Technologies for Multipollutant Strategies; EPA–600/R–02/073 October 2002.

[69] Best Coal-fired Projects, Springerville Unit 3 Expansion Project, Power Engineering, November 2006, *http://www.powergenworldwide.com/index/display/articledisplay/282547/articles/power-engineering/volume-111/issue-1/features/projects-of-the-year.html.*

[70] *http://www.cwlp.com/electric_division/generation/Dallman%204%20Power%20Plant%20of%20the%20Year.pdf.*

[71] *http://www.epa.gov/compliance/resources/decrees/civil/caa/americanelectricpower-cd.pdf.*

[72] *http://www.businesswire.com/news/home/20060731005193/en/Contractors-Selected-Install-Emissions-Control-System-Pennsylvania.*

[73] *http://www.epa.gov/Compliance/resources/complaints/civil/caa/homercity-cp.pdf.*

planning). Examples are Killen Station Unit 2,[74] and Asheville Unit 1.[75]

• In 2009 the APC supply chain deployed more than six times more GW capacity of FGD and SCR controls than the 5.9 GW of FGD that would be deployed by 2014 under this Rule.

• The APC supply chain has seen a 2-year decline in deployments since its peak in 2009, but in 2011 is nonetheless putting into service about three times more GW capacity of FGD and SCR controls than the 5.9 of FGD that would be deployed under this Rule.

• Because the supply chain has been in decline, but remains quite active, there are now adequate supply chain resources available that can be quickly reengaged to support a rapid deployment of 5.9 GW of FGD.

EPA recognizes that the installation of any amount of scrubbers in this short time frame will require aggressive action by plant owners and that the owners who can meet this schedule will already have done their project planning and will be ready to place orders. An example of such ''early movers'' was seen in the power sector's anticipation of CAIR. EPA data indicate that solely CAIR-driven FGD and SCR deployments of about 6 GW occurred within two and one-half years after CAIR's finalization in mid-2005, showing that at least 20 percent of the total CAIR-only controls effort through a 2010 compliance date was sufficiently planned for installation to start before or immediately upon finalization of the rule. EPA reasonably expects that similar advance planning has already been done for units that would retrofit under this rule.

In the event that a particular control installation requires additional time into 2014 to come online, EPA believes compliance would not be jeopardized given the ability of sources to purchase allowances during that time. This approach could be supported by some sources with FGD that have the ability to increase their SO_2 removal above historic rates, perhaps through relatively low cost upgrades to improve scrubber effectiveness, or by operating scrubbers at higher chemistry ratios. The ability of sources to temporarily or permanently substitute dry DSI for FGD serves as another backstop for any feasibility issues regarding FGD. Note that the updated modeling for this rule projects the addition by 2014 of about 3 GW of DSI for SO_2 control using trona or other sorbent. DSI is a relatively low capital cost technology that readily can be installed in the time frame available for compliance.[76] [77]

It should also be noted that most APC retrofits will involve a source outage for final ''tie-in'' of retrofitted systems to existing systems, during which time emissions from the affected units are zero. For some sources, the duration of this tie-in outage may effectively extend the deadline by which all of the projected emission reductions need to occur.

Although EPA believes that installation of 5.9 GW of FGD at facilities by January 1, 2014 is feasible, EPA also conducted an IPM sensitivity analysis to examine a scenario in which FGD retrofitting by 2014 is not allowed. Results of EPA's ''no FGD build in 2014'' analysis indicate that if the power industry were subjected to the requirements of this rule without an FGD retrofit option for compliance until after 2014, covered units would still be able to meet the Transport Rule requirements in every state while respecting each state's assurance level. (*See* the docket to this rulemaking for the IPM run titled ''TR_No_FGD_in2014_Scenario_Final.'')

In this scenario without the availability of new FGD by 2014, sources in covered states complied with the Transport Rule budgets by using moderate additional amounts of DSI retrofits, switching to larger shares of sub-bituminous coal, and dispatching larger amounts of natural gas-fired generation in lieu of the FGD retrofits that are projected as being most economic under modeling of the Transport Rule remedy. Because new FGD capacity is included in EPA's projection of the least-cost set of SO_2 emission reductions required in Group 1 states, the ''no FGD'' sensitivity scenario did project higher system costs, although these costs were still substantially lower than the remedy EPA modeled in the Transport Rule proposal.

The ''no FGD'' analysis indicates that while the ability of Group 1 states to meet their 2014 SO_2 budgets is facilitated by FGD retrofits, they are by no means required, nor is Transport Rule compliance jeopardized by their absence. Even under a scenario in which sources fail to complete FGD retrofits by 2014, sources in the affected states would have other compliance options available at reasonable cost to meet the state's budget requirements. This analysis shows that Group 1 states would be able to comply with their 2014 SO_2 budgets by relying on other emission reduction opportunities that do not require FGD retrofits. EPA analysis confirms that those alternatives are feasible both in terms of cost and timing.

Finally, EPA recognizes that, when finalized later this year as currently scheduled, the Mercury and Air Toxics Standards (MATS) will require significant retrofit activity at covered sources in the power sector with a 2015 compliance date for that rule. EPA's projections of retrofit activity under the final Transport Rule are highly compatible with its projections of retrofit activity under the proposed MATS (which included the proposed Transport Rule in its baseline). EPA therefore anticipates that the Transport Rule's projected retrofit activity will not only be the least-cost compliance pathway to meeting state budgets in 2014 but will also accelerate emission reductions subsequently required by the effective date of MATS. The final Transport Rule's projected 2014 retrofit installations will also further incentivize the power sector to ramp up its retrofit installation capabilities to achieve broader deployment of the projected pollution control retrofits under the proposed MATS.

Considering all the reasons given above, EPA has concluded that the 2014 requirements for SO_2 emissions in the states covered by the Transport Rule are reasonable and can be met by the power industry by a variety of means.

c. Coal Switching for SO_2 Compliance in 2012 and 2014

Coal switching is another mechanism which can be used along with operating pollution controls in 2012 for compliance. It will be a complementary activity by many coal-fired units alongside of operating pollution controls and the addition of more scrubbers and DSI in 2014.

In the proposal, EPA noted that coal switching could serve as a compliance mechanism for 2012. EPA requested comment on the reasonableness of EPA's assumption that coal switching will have relatively little cost or schedule impact on most units. EPA received substantial comment suggesting that the coal switching and coal blending projected by EPA modeling are not feasible for all units,

[74] Black & Veatch, *http://www.bv.com/News_3_Publications/News_Releases/2005/0503.aspx* (start), *http://www.bv.com/wcm/press_release/07252007_9767.aspx* (completion).

[75] PowerGenWorldwide, Projects of the Year, January 1, 2007, *http://www.powergenworldwide.com/index/display/articledisplay/282547/articles/power-engineering/volume-111/issue-1/features/projects-of-the-year.html.*

[76] ICAC letter to Senator Carper, November 3, 2010, *http://www.icac.com/files/public/ICAC_Carper_Response_110310.pdf.*

[77] Assessment of Technology Options Available to Achieve Reductions of Hazardous Air Pollutants, URS Corporation, April 5, 2011, *http://www.supportcleanair.com/resources/studies/file/4-8-11-URSTechnologyReport.pdf.*

and that, if feasible, would often incur a cost through the derating of the unit associated with the switch to a lower sulfur coal or coal blend. Additionally, sources indicated that coal switching by 2012 would not always be possible in the six month window between final rule signature and start of compliance. These feasibility concerns stemmed from restrictions included in existing coal supply contracts and from boiler design constraints that may hinder coal switching within a 6 month window.

EPA agrees with these concerns and revised its IPM modeling to limit coal switching capability in 2012 for particular units that may have trouble switching coals or coal blends in a six month time frame. A cost adder was also included in the IPM modeling for coal switching to capture the potential cost burden of deratings that might accompany switching to a very low sulfur subbituminous coal or coal blend.

A particular commenter concern regarding switching to lower sulfur within the eastern bituminous coals related to a possible impact on the performance of a cold-side electrostatic precipitator (ESP). Some ESPs that operate at acceptably high collection efficiency when using a high- or medium-sulfur bituminous coal may experience some loss in collection efficiency when a lower sulfur coal is used. Whether this occurs on a specific unit, and the extent to which it occurs, would depend on the design margins built into the existing ESP, the percentage change in coal sulfur content, and other factors. In any case, industry experience indicates that relatively inexpensive practices to maintain high ESP performance on lower sulfur bituminous coals are available and can be used successfully where necessary. These include a range of upgrades to ESP components and flue gas conditioning.[78] EPA therefore assumes that it will not be necessary for units that switch from higher to lower sulfur bituminous to make a costly replacement of the ESP.

Coal switching as a SO_2 compliance option might also include switching from bituminous to subbituminous coal. EPA's analysis does not assume that a unit designed for bituminous can switch to (very low sulfur) subbituminous coal unless the unit's historical data demonstrate that capability in the past. EPA assumes that units with that demonstrated capability have already made any investments needed to handle a switch back to the use of subbituminous coal at a similar percentage of its heat input as in the past. For IPM analysis in the final rule EPA also introduced a coal switching option that assumes that units can increase a historically low percentage use of subbituminous to a ''maximum'' level, if economic. This option includes an appropriate derate in output, increase in heat rate, and additional capital and operating costs. Details of this and other IPM updates for this rule are provided in the IPM Modeling Documentation in the docket for this rulemaking (''Documentation Supplement for EPA Base Case v.4.10_FTransport—Updates for Final Transport Rule'').

Some commenters also expressed concern with the assumption that coal-switching from lignite to subbituminous is a cost-effective or feasible emission reduction strategy, particularly at Texas EGUs. EPA carefully considered these comments and adjusted its modeling of cost-effective reductions to address this concern. Specifically, EPA made adjustment in the model so that it assumes coal-switching is not a compliance option at the specific units where commenters identified technical barriers to subbituminous coal consumption. The Transport Rule emission budgets are based on this adjusted modeling which does not assume any infeasible coal-switching from lignite to subbituminous. In addition, EPA's analysis of cost-effective reductions in each state presented in section VI.B shows that Texas is capable of cost-effectively meeting its Transport Rule emission budgets; however, EPA also conducted sensitivity analysis that shows Texas can also achieve the required cost-effective emission reductions even while maintaining current levels of lignite consumption at affected EGUs. More details regarding this analysis, including a table comparing key parameters between the main Transport Rule remedy analysis and this Texas lignite sensitivity, can be found in the response to comments document and the IPM model output files included in the docket for this rulemaking.

D. Allocation of Emission Allowances

Under the final rule, EPA distributes a number of SO_2, annual NO_X, and ozone-season NO_X emission allowances to covered units in each state equal to the SO_2, annual NO_X, and ozone-season NO_X budgets for those states. These budgets are addressed in section VI.D of this preamble. This section discusses the methodology EPA uses to allocate allowances to covered units in each state.

As discussed later in section VII.D.2, EPA is setting aside a base 2 percent of each state's budgets for allowance allocations for new units, with 5 percent of that 2 percent, or 0.1 percent of the total state budget being set aside for new units located in Indian country. To this base 2 percent, EPA is setting aside an additional percentage on a state-by-state basis, ranging from 0 to 6 percent (yielding total set asides of 2 percent to 8 percent), for units planned to be built. The remainder of the state budget is allocated to existing units. Tables VI.D.–3 and VI.D.–4 in this preamble show the SO_2, annual NO_X, and ozone-season NO_X budgets for each covered state (without the variability limits). In allocating allowances to existing and new units, EPA distributes four discrete types of emission allowances for four separate programs: SO_2 Group 1 allowances, SO_2 Group 2 allowances, annual NO_X allowances, and ozone-season NO_X allowances.

In the SO_2 Group 1 and SO_2 Group 2 programs, each SO_2 allowance authorizes the emission of one ton of SO_2 in that vintage year or earlier and is usable for compliance only in the program for which the allowance was issued. In the annual NO_X program, each annual NO_X allowance authorizes the emission of one ton of NO_X in that vintage year or earlier in that program. In the ozone-season NO_X program, each ozone-season NO_X allowance authorizes the emission of one ton of NO_X during the regulatory ozone season (May through September for this final rule) in that vintage year or earlier for that program.

In each of the four trading programs, a covered source is required to hold sufficient allowances (issued in the respective trading program) to cover the emissions from all covered units at the source during the control period. EPA assesses compliance with these allowance-holding requirements at the source (*i.e.,* facility) level.

This section explains how, in this final rule, EPA allocates a state's budget to existing units and new units in that state. This section also describes the new unit set-asides and Indian country new unit set-asides in each state, allocations to units that are not operating, and the recordation of allowance allocations in source compliance accounts.

1. Allocations to Existing Units

This subsection describes the methodology EPA will use in the FIPs finalized in this action to allocate to

[78] Assessment of Technology Options Available to Achieve Reductions of Hazardous Air Pollutants, URS Corporation, April 5, 2011, *http://www.supportcleanair.com/resources/studies/file/4-8-11-URSTechnologyReport.pdf.*

existing units.[79] The same methodology will be used to allocate allowances to existing units for all four trading programs.

For the reasons explained below, EPA has decided to base allocations made under the FIPs on historic heat input, subject to a maximum allocation limit to any individual unit based on that unit's maximum historic emissions. This methodology gives each existing unit an allocation equal to its share of the state's historic heat input for all the covered units in the program, except where that allocation would exceed its maximum historic emissions; this methodology constrains the heat input-based allocations from exceeding any unit's maximum historic emissions. Further detail on the implementation of this approach is provided in section VII.D.1.c below as well as in the Allowance Allocation Final Rule TSD in the docket for this rulemaking. All existing-unit allocations for 2012 will be made pursuant to the FIPs. However, as described in section X, states may submit SIPs or abbreviated SIPs to use different allocation methodologies for allowances of vintage year 2013 and later.

a. Summary of Allocation Methodologies and Comments

EPA took comment on three distinct allocation methodologies for existing units. The first—an emissions-based option—was presented in the original Transport Rule proposal (75 FR 45309). The second and third—heat input option 1 and heat input option 2—were presented in a Notice of Data Availability (76 FR 1113). EPA received numerous comments on all three options.

i. Emission-Based Allocation Methodology

The emission-based option presented in the original Transport Rule proposal would base allowance allocations to existing units on each covered unit's calculated emission ''share'' of that state's budget for a given pollutant under the Transport Rule. The proposed rule stated that ''for 2012, each existing unit in a given state receives allowances commensurate with the unit's emissions reflected in whichever total emissions amount is lower for the state, 2009 emissions or 2012 base case emissions projections. In either case, the allocation is adjusted downward, if the unit has additional pollution controls projected to be online by 2012. * * * For states with lower SO_2 budgets in 2014 (SO_2 Group 1 states), each unit's allocation for 2014 and later is determined in proportion to its share of the 2014 state budget, as projected by IPM'' (75 FR 45309).

Many commenters objected to this projected emission allocation methodology. Commenters offered two principle objections. First, they argued EPA should not use unit-level model projections to allocate allowances. Second, they argued the use of any emission-based allowance methodology is improper. Many of these commenters argued that instead of an emission-based allocation methodology, EPA should use a heat-input-based allocation methodology.

Commenters' objections to the use of unit level model projections focused primarily on the accuracy of such projections. While many commenters supported the use of modeling projections in determining state emission budgets, they argued that the unit-level model projections were not sufficiently accurate to use as a basis for allocating allowances to individual units. Among other things, they argued that the modeling used for the proposal did not recognize certain non-economic factors that may cause individual units to operate differently than the model projects. Commenters also argued that EPA's modeling does not capture all up-to-date contracts and other economic arrangements made at the unit-level which may affect operational decision-making. Some of these commenters continued to support the use of an emission-based allocation approach, but urged EPA to use more up-to-date and specific unit-level data in its modeling projections. Others opposed the use of any emission-based allocation approach.

EPA acknowledges that the model may not, at this time, capture all relevant operational decision factors for each individual unit. EPA also recognizes that there are unit-level details of operational decision-making and economic arrangements (such as certain contracts for electricity sales) that are private and thus unavailable to EPA on an ongoing basis for modeling purposes. EPA believes these potential omissions would not have a significant impact on EPA's determination of significant contribution at the state level; however, EPA recognizes they could conceivably have a significant impact on projections at the individual unit level. EPA thus agrees with commenters that the unit-level emission projections from its modeling may not reflect all possible operational decisions at a given unit and are therefore not an appropriate proxy measure to use as a basis for allocating allowances to individual units.

Many commenters also argued that, even if the emission projections could be adjusted to capture all known and up-to-date unit-level operational factors, EPA should not use any emission-based allocation approach. They argued that an emission-based approach should not be used because it is not fuel-neutral. That is to say, the type of fuel consumed significantly affects the emissions from, and therefore the allocation to, a given unit under an emission-based approach. Commenters argued that an approach that is not fuel-neutral effectively awards higher-emitting units. Commenters also argued that a projected emission-based approach should not be used because it is not control-neutral. In other words, whether or not a unit has installed controls would significantly affect the allocation for a given unit under an emission-based approach. Under an emission-based approach, controlled units receive significantly fewer allowances than uncontrolled units. Such an approach, commenters pointed out, effectively penalizes sources who have taken action to reduce emissions.

EPA acknowledges that an emission-based approach would not be fuel-neutral or control-neutral. EPA notes that the DC Circuit rejected the fuel adjustment factors that were used in CAIR to adjust state budgets based on the type of fuel burned at each covered unit. *North Carolina,* 531 F.3d 918–21 (rejecting use of fuel adjustments in setting state NO_X budgets). While the proposal's allocation methodology did not explicitly adopt ''fuel adjustment factors'' for allocation purposes, EPA recognizes that an emission-based allocation methodology effectively advantages or disadvantages units based on the type of fuel they combust.

In addition, several commenters argued that the proposal's emission-based methodology would inappropriately reward the highest emitters under the program with more allowances than their lower-emitting counterparts would receive. EPA acknowledges that such a methodology would allocate more allowances to units whose emissions make up a larger share of the proposed Transport Rule programs' state budgets. EPA notes that because any allocation patterns under the Transport Rule FIPs would be established in advance of covered sources' compliance decisions (*i.e.,* decisions regarding how much to emit under the programs), covered sources

[79] In this rule, existing units are defined as covered units that commenced commercial operation prior to January 1, 2010. As explained in greater detail in Section VII.B. of this preamble, EPA decided to use this definition to ensure that EPA would have at least 1 full year of quality-assured data on which to base a unit's allocation.

cannot be ''rewarded'' by adjusting their future emissions. However, EPA notes commenters' observations that the proposal's methodology would reduce allocations to units that previously installed pollution control technology or invested in cleaner forms of generation in anticipation of CAIR. EPA concluded in review of these comments that the proposed Transport Rule's allocation methodology unintentionally yielded this distributional outcome. EPA therefore considered alternative allocation methodologies described below.

A substantial portion of the commenters who objected to the proposal's emission-based allocation option urged EPA to consider historic heat input based approaches. EPA agreed it should accept comment on the use of historic heat input-based approaches and published a NODA to provide an opportunity for comment on two specific heat input options and the allocations that would result from application of those options to the proposed Transport Rule state budgets.

ii. Heat Input Allocation Option 1

The first heat input option presented by EPA in the NODA (''Option 1'') allocates allowances to units based solely on their historic heat input. Under this option, EPA would establish a 5-year historic heat input baseline for each covered unit and allocate allowances to sources at levels proportional to the each unit's share of the total historic heat input at all covered units in that state.

Numerous commenters supported the use of a heat-input based allocation methodology. These commenters stated that basing allocations on historic heat input has the following advantages over the proposal's emission-based allocation methodology:

(A) For certain types of units, historic heat input data may offer a better representation of unit-level operation than model projections of unit-level emissions; furthermore, for all units, historic heat input is typically represented by quality-assured data reported by sources from continuous emission monitoring systems, which strengthens its accuracy.

(B) Historic heat input data are generally fuel-neutral in that they do not generally yield higher allocations for units burning or projected to burn higher emitting fuels.

(C) Historic heat input data are generally emission-control-neutral in that they do not generally yield reduced allocations for units that installed or are projected to install pollution control technology.

Many commenters also argued that a heat input-based allocation methodology should be used because, unlike the proposal's emission-based methodology, a heat-input based methodology would be generally fuel-neutral and control-neutral and would rely on unit-level quality-assured data instead of on modeling projections.

Several commenters expressed support for specific aspects of heat input option number one. From a technical standpoint, commenters noted that heat input option 1 relied on the highest-quality and most transparent data EPA had provided as a basis for allocating allowances under the Transport Rule programs. They argued that the calculation methodology for heat input option 1 is more readily re-created and understood by sources than either the proposal's methodology or EPA's application of the ''reasonable upper-bound capacity utilization factor and a well-controlled emission rate'' in heat input option 2 (described in greater detail below). They also pointed out that it is similar to methodologies used in previous trading programs, such as the NO_X Budget Trading Program (see 40 CFR 96.42(a) & (b) (calculating each existing EGU's allocation by multiplying each unit's historic heat input by 0.15 lb/mmBtu)). In addition, commenters supported the reliance of heat input option 1 on continuous emission monitoring system (CEMS) data that are reported to EPA and certified by the source's designated representative (DR) as accurate and complete. In addition, many commenters supported EPA's use of historic data without further transformation by any calculation factors created by EPA.

From a policy perspective, commenters highlighted the fuel neutrality and emission-control neutrality aspects of heat input option 1. They noted that this option does not, in contrast to the proposal's emission-based methodology, penalize a source, through a reduced allowance allocation, for having chosen a generation technology or emission control technology that was more favorable to public health and the environment. EPA agrees with these observations. The allocation pattern associated with this option does not advantage or disadvantage units based on either the fuel consumed or the presence or absence of a pollution control technology. In this respect, it is a neutral approach that does not ''reward'' high-emitting units or ''penalize'' low-emitting units, including, for example, those units on which pollution control technology was installed in anticipation of CAIR.

EPA agrees with the aforementioned arguments from these commenters regarding the technical and policy merits of this heat input-based allocation methodology. EPA believes that the quality-assured heat input data reported by EGUs under its programs are among the most detailed and sound unit-level data accessible by EPA. EPA believes the calculation of any individual unit's share of this historic heat input data is a straightforward, clear, and simple calculation to perform, such that EPA's calculated allowance allocations under this approach can be relatively easily replicated.

EPA also agrees with commenters that such data has previously supported allowance allocation procedures for highly successful program implementation of the ARP and the NO_X Budget Trading Program (NBP). Notably, Congress chose a heat input-based allocation approach when authorizing the ARP in title IV of the Clean Air Act, suggesting that Congress viewed heat input as a reasonable basis for allocation. Additionally, EPA's selection of a heat input-based approach for the NBP was not legally challenged, implying that stakeholders generally saw a heat input-based approach as reasonable.

EPA also agrees with comments observing that allocations made under this heat input approach do not advantage or disadvantage units based on their choice of fuel combustion or pollution control technology, and that allocations under this approach would thus be ''fuel-neutral'' and ''control-neutral.'' EPA also agrees with commenters that unlike the proposed rule's emission-based methodology, this heat input methodology does not yield lower allocation to units that reduced emissions in advance of the Transport Rule relative to units that did not make such emission reductions.

Other commenters objected to the use of a heat-input based allocation methodology. These commenters argued that the allocation pattern associated with a heat-input allocation methodology would yield ''windfall profits''—in the form of allowance allocations greatly in excess of likely emissions—for certain units, particularly with regard to SO_2 allowance allocations for units combusting natural gas. EPA disagrees with the characterization of the excess allowances as ''windfall profits.'' Allocations based on heat-input alone are fuel-neutral and control-neutral. The characterization of the heat-input allocation methodology as creating ''windfall profits'' for any unit is based on the assumption that all units should

be allocated allowances based on emissions, not heat input. In arguing the heat-input approach creates a ''windfall'' for some units, commenters are assuming that the allocation of allowances above a unit's projected emissions constitutes a ''windfall''—a conclusion EPA does not accept. EPA believes that under market-based regulatory programs, it is appropriate to base initial allowance allocations on a neutral factor and allow the market to determine the least-cost pattern of emission reductions in each state to achieve the reductions that address the state's significant contribution and interference with maintenance under the final Transport Rule programs. EPA disagrees that future allowance transactions (following a neutral-factor initial allocation) in response to these market forces can be characterized as ''windfall profits.'' As explained above, EPA believes it is appropriate to allocate allowances based on a neutral factor. Commenters appear to ask EPA, instead of allocating based on a neutral factor, to consider the unit-level distributional impacts of each allocation methodology and to select an allocation methodology on the basis of equity. EPA does not believe it would be appropriate for the agency to pick an allocation methodology to achieve any particular distributional outcome as such considerations are not related to the statutory mandate of CAA section 110(a)(2)(D)(i)(I). Instead, EPA believes it is appropriate to allocate allowances to sources covered by its trading programs based on a neutral factor. Furthermore, CAA section 110(a)(2)(D)(i)(I) requires prohibition of certain emissions within a state (*i.e.,* a state's significant contribution and interference with maintenance). It does not direct EPA to use any particular methodology for allocating allowances under a trading program designed to ensure all such emissions are prohibited. As such, EPA believes it is appropriate to allocate allowances based on a neutral factor representing fossil energy content used to produce electricity. Detailed considerations of equity, as the DC Circuit reminded EPA, are not related to the statutory mandate of section 110(a)(2)(D)(i)(I). *North Carolina,* 531 F.3d 921.

Some commenters objected to the use of a heat input-based approach by arguing that higher-emitting units would not receive an initial allocation sufficient to cover their emissions. EPA does not believe it is reasonable to expect initial allocations to cover each unit's emissions under a trading program aimed at producing meaningful emission reductions. In its administration of prior trading programs such as the ARP and the NBP, EPA has made initial allowance allocations using a heat input-based approach, and virtually all covered sources have successfully complied at the end of each compliance period by making cost-effective emission reductions, purchasing additional allowances through robust markets to cover emissions, or undertaking both types of activities. EPA disagrees with commenters' arguments that allowance allocations should be used to compensate units with higher emissions.

iii. Heat Input Allocation Methodology Option 2

The second heat input option presented by EPA for public comment also would use historic heat input but would apply a constraint to unit-level allocations under certain circumstances. Specifically, under this option unit-level allocations would not be allowed to exceed what EPA determines, based on historic emissions and other factors, to be the units' ''reasonably foreseeable maximum emissions.''

To apply this constraint, EPA first would determine whether the allocation to a unit under an unconstrained heat-input methodology would exceed that unit's maximum historic emissions of the relevant pollutant since 2003 ''in order to reflect unit-level emissions before and after the promulgation of the CAIR'' (76 FR 1115). Using this baseline would enhance the neutrality of the maximum historic emissions data because it would capture the highest emissions of the unit during that period regardless of what fuels it combusted or what pollution control devices were installed and used at any particular time during that period. In other words, a unit's allocation would not be reduced due to a recent decision to switch fuels or install pollution controls.

Second, for this option, EPA then would adjust that maximum historic emissions data by applying a ''well-controlled rate maximum,'' designed to place ''a reasonably foreseeable maximum emissions level reflecting a reasonable upper-bound capacity utilization factor and a well-controlled emission rate that all units (regardless of the type of fuel they combust) can meet for the pollutant'' (76 FR 1115). This option would constrain certain units' allocations that, if based solely on historic heat input, would be determined by EPA to be ''in excess of their reasonably foreseeable maximum emissions'' under the Transport Rule programs (76 FR 1115).

As noted above, commenters offered numerous arguments in favor of using a historic heat input approach. These arguments apply equally to heat input option 1 and heat input option 2. EPA also received numerous comments comparing the two heat input options presented.

Many commenters preferred heat input option 1's reliance purely on historic data as compared with heat input option 2's reliance on that data modified by the application of EPA-determined ''reasonable upper bound capacity factors'' and ''well-controlled emission rates.'' Commenters also criticized the complexity of these modification factors in heat input option 2. While EPA believes both options represent viable approaches, the Agency agrees with commenters that the application of these factors increase the complexity of allocation determinations and would adjust unit-specific historic data by applying EPA-created factors generically determined for broad categories of units.

Some commenters suggested that EPA's application of these modification factors could also represent legal vulnerabilities for the Transport Rule. In particular, they were concerned that the capacity factors and well controlled emission rates presented as part of heat input option 2 could be perceived as arbitrary. While EPA does not agree that these modification factors are arbitrary, the Agency does recognize that application of such EPA-created generic factors in determining unit-specific allocations increases the complexity of the allocation approach and raises issues regarding whether such generic factors are appropriately applied to each individual unit.

iv. General Comments on EPA's Authority To Allocate Allowances

Numerous commenters also noted that EPA has generally broad authority in selecting an allocation methodology under CAA sections 110(a)(2)(D)(i)(I) and 302(y).[80] EPA agrees with commenters that the Agency has broad discretion in this area. Neither the CAA nor the D.C. Circuit Court's opinion in *North Carolina* specifies a particular methodology that EPA must use to allocate allowances to individual units.

[80] CAA section 302(y) defines the term ''Federal implementation plan'' as ''a plan (or portion thereof) promulgated by the Administrator to fill all or a portion of a gap or otherwise correct all or a portion of an inadequacy in a State implementation plan, and which includes enforceable emission limitations or other control measures, means or techniques (including economic incentives, such as marketable permits or auctions of emissions allowances), and provides for attainment of the relevant national ambient air quality standard.''

CAA section 110(a)(2)(D)(i)(I) requires prohibition of emissions ''within the state'' that significantly contribute to nonattainment or interfere with maintenance and gives states broad discretion to develop a control program in a SIP that achieves this objective. EPA has similarly broad discretion when issuing a FIP to realize this objective. Moreover, while the definition of FIP in CAA section 302(y) clarifies that a FIP may include ''enforceable emission limitations or other control measures, means or techniques (including economic incentives, such as marketable permits or auctions of emissions allowances),'' this section does not require EPA to use any particular methodology to allocate allowances under a FIP trading program. In light of this lack of direction in the CAA concerning allowance allocation, EPA has broad discretion to select an allocation methodology that is reasonable and consistent with the goals of CAA section 110(a)(2)(D)(i)(I).

The body of public comment makes it clear that no allocation option could be deemed satisfactory from the perspective of all stakeholders. Public comments from most states and industrial stakeholders with a substantial interest in how EPA allocates allowances under the Transport Rule FIPs expressed support for an historical heat input-based approach as opposed to the proposal's emission-based approach. Most commenters favored this historical heat input data basis as the most sound and offered technical data corrections, which EPA considered and generally used in the final rule. EPA believes it is reasonable to select a heat input-based approach for the final Transport Rule because this approach is consistent with the rule's statutory objectives and has been found, when implemented in prior trading programs, to be a credible, workable allocation approach.

b. Final FIP Allocation Methodology

After consideration of all comments, EPA decided to allocate allowances to individual units based on that units' share of the state's historic heat-input, but to ensure that no unit's allocations exceed that unit's historic emissions. EPA decided to use the allocation methodology originally presented as heat input option 2, modified in response to public comments. EPA decided to use heat input option 2 but without the application of the ''reasonable upper-bound capacity utilization factor and a well-controlled emission rate'' factors. This allocation approach reflects the Agency's response to extensive public comment on the options presented in the proposed Transport Rule and subsequent NODAs and is a logical outgrowth of those actions. EPA is using this approach to allocate allowances under the FIPs for all four trading programs. Further details on the calculation and implementation of this approach are provided below in section VII.D.1.c and can also be found in the Allowance Allocation Final Rule TSD in the docket for this rulemaking.

The principal reasons for this decision are:

- EPA believes that existing-unit allowance allocation under the Transport Rule should not generally advantage or disadvantage units based on the selection of fuels consumed or of pollution controls installed at a given unit in anticipation of either the Clean Air Interstate Rule or the Transport Rule, *i.e.,* fuel or control decisions taken from 2003 onward. An approach that does not advantage or disadvantage units in this way avoids allocating in a way that would effectively penalize units that have already invested in cleaner fuels or other pollution reduction measures that will continue to deliver important emission reductions under this rulemaking. The approach selected in the final rule generally does not penalize such units and is thus generally fuel-neutral and control-neutral in its allocation determinations.
- EPA finds that the selected approach maximizes transparency and clarity of allowance allocations. EPA has already made public the historic heat input and historic emissions data on which this approach is based, and its application to calculate unit-level allocations in each state under that state's emission budgets finalized in this Transport Rule can be relatively easily replicated.
- EPA finds that quality-assured historic CEMS-quality data used to implement this approach represent the most technically superior data available to EPA at the time of this rulemaking for calculating unit-level allocations. The selected approach relies on unmodified historic data reported directly by the vast majority of covered sources, whose designated representatives have already attested to the validity and accuracy of this data. EPA agrees with commenters that allowance allocations should be based on quality-assured data to the maximum extent possible. This approach uses the most accurate data currently available to EPA.
- Heat-input based approaches were used to allocate allowances under both the NO_X Budget Trading Program and the Acid Rain Program. Allocation under these programs was readily and easily administered, and the programs achieved or exceeded their environmental goals. The selected approach's use of heat input as a basis for allocations builds on prior legislative and administrative approaches to allowance allocations for trading programs.
- EPA also finds that the selected approach's addition of a constraint to heat input-based allocations where such allocations would otherwise exceed a unit's maximum historic emissions is a reasonable extension of a heat input-based allocation approach. The Transport Rule trading programs are established to achieve overall emission reductions in each covered state. As a group, covered sources within each state must make the necessary reductions under these programs. In light of each program's goal to reduce each state's overall emissions, it is logical and consistent with that goal that the starting point for each source under these programs—*i.e.,* the initial allocations of shares of the state budget to covered units—be an amount of allowances no greater than each unit's maximum historic emissions. Under the trading programs, any source may emit a ton of SO_2 or NO_X for which it holds a corresponding allowance, which it may acquire either by initial allocation or by subsequent purchase, to the extent consistent with the assurance provisions (discussed elsewhere in this preamble) that ensure achievement of the requisite overall reductions in each state. Consequently, the initial allocations to the units at each source are the starting point for each source's efforts to comply with the allowance-holding and assurance provision requirements, but do not determine the source's strategies for compliance and ultimate level of emissions. EPA believes that a starting point of unit-level heat input-based allocations constrained not to exceed each specific units' maximum historic emissions is reasonable and consistent with the program goals of reducing overall emissions in each state: Each existing unit is allocated an amount that either reflects reduced unit emissions or does not exceed historic emissions, and, from that starting point, the units, as a group, reduce overall emissions to the level required for each state. Conversely, EPA believes that a starting point allocating some units more than they have ever emitted would be illogical in programs aimed at reducing overall emissions.

EPA believes that this selected allocation methodology for the final Transport Rule FIPs is within its authority under the Clean Air Act. Section 110(a)(2)(D)(i)(I) of the CAA

requires that emissions ''within a state'' that significantly contribute to nonattainment or interfere with maintenance in another state be prohibited. In the final Transport Rule, EPA analyzed each individual state's significant contribution and interference with maintenance and calculated budgets that represent each state's emissions after the elimination of prohibited emissions in an average year. The methodology used to allocate allowances in a state budget to individual units in the state has no impact on that state's budget or on the requirement that the state's emissions not exceed that budget plus variability. Regardless of the allocation methodology used, the state's responsibility for eliminating its significant contribution and interference with maintenance remains unchanged. This is reflected by the fact that allocations under each state's budget, regardless of how they are made, cannot change that state's budget. In sum, the allocation methodology has no impact on the final rule's ability to satisfy the statutory mandate of CAA section 110(a)(2)(D)(i)(I) to eliminate significant contribution to nonattainment and interference with maintenance.

Consistent with its broad authority in CAA sections 110(a)(2)(D)(i)(II) and 302(y), EPA believes that data quality, fuel-neutrality, control-neutrality, transparency, clarity, consistency with program goals, and successful experience in previous trading programs are reasonable factors on which to base the selection of an allowance allocation methodology for existing units for the final Transport Rule. EPA believes that the transparency and clarity of this allocation approach builds credibility with the public that the government is distributing a public resource—*i.e.,* allowances—precisely as stated in this rulemaking, with clear execution that can be relatively easily verified.

EPA also believes that the final Transport Rule's heat input-based approach for existing units is consistent with the goals of the Clean Air Act because it allocates allowances to existing units on the basis of a neutral factor that does not advantage or disadvantage a unit based on what fuel the unit burns or whether or not a unit has installed controls in anticipation of these regulations. In contrast, allocations under the proposal's emission-based methodology would give a greater share of allowances to units with higher emission rates, which are generally responsible for a greater share of a state's total emissions. Because these higher-emitting rate units are generally responsible for a greater share of emissions, it follows that they are also responsible for a greater share of a state's significant contribution to nonattainment and interference with maintenance. The proposal's emission-based allocation methodology would disadvantage one of two otherwise identical existing units if it invested in emission reductions in anticipation of the Clean Air Interstate Rule or this final Transport Rule.

The heat-input allocation methodology selected for the final Transport Rule does not have this flaw. In contrast to the proposal's emission-based allocation approach, the heat input allocation methodology selected by EPA yields a smaller proportion of allowances relative to emissions to higher-emission-rate units and a higher proportion of allowances relative to emissions to lower-emission-rate units. For example, assume that in a state with two units and in a baseline year, Unit A combusts 100 mmBtu of heat input and emits 1,000 tons while Unit B combusts 100 mmBtu of heat input and emits only 500 tons. Assume also that this state's future Transport Rule emissions budget for this pollutant is only 500 tons. Because Units A and B each make up an even share of historic heat input for the state, the final rule's heat input-based approach would allocate the same share of allowances (250 tons) to each unit. In this example, Unit A's initial allocation of 250 is a smaller proportion of its historic emissions (25 percent of its baseline 1,000-ton emissions), while Unit B's initial allocation of 250 is a larger proportion of its historic emissions (50 percent of its baseline 500-ton emissions). Therefore, Unit B's ability to emit fewer tons per mmBtu of heat content used for generating electricity (as compared with Unit A) results in Unit B receiving a larger proportion of its historic emissions as an initial allocation share than Unit A receives.

This relative distributional pattern yielded is consistent with the goals of CAA section 110(a)(2)(D)(i)(I) because under this distribution, higher-emitting units, which are responsible for a greater share of the state's significant contribution to nonattainment and interference with maintenance, would require relatively more allowances in order to cover their pre-existing emissions than would lower-emitting units. EPA believes this initial allocation pattern is an appropriate reflection of the goals of CAA section 110(a)(2)(D)(i)(I).

The heat input-based allowance methodology selected by EPA is fuel-neutral, control-neutral, transparent, based on reliable data, and similar to the allocation methodologies used in the NO_X SIP Call and Acid Rain Program. For all these reasons, EPA determined that it is appropriate to use a heat input-based allocation methodology in this rule.

In addition, this allocation methodology is similar to an output-based allocation approach, which would base allocations on the quantity of electricity generated (rather than energy content combusted) and would also be fuel-neutral, control-neutral, and able to reward generation units that operate the most efficiently. Many state and industry commenters advocated using an output-based approach due to its reported strong value in promoting efficiency. However, at this time EPA does not have access to unit-level output data that is as quality-assured or comprehensive as its data sets on heat input across the units considered. Therefore, EPA is using a heat input-based approach under the Transport Rule in part due to its ability to serve as a reasonable proxy for an output-based standard using the most quality-assured data that EPA has to date.

In the NODA, EPA noted that final state budgets and allocations may differ from the proposed budgets and allocations because EPA was still in the process of updating its emission inventories and modeling in response to public comments, including comments on IPM. Thus, unit-level allocations in the NODA provided an indication of the proportional share of a state's budget that would be allocated to individual existing units if the alternative methodologies were used. The allocations made final today are based on budgets that reflect the updated modeling and comments received during the comment period.

c. Calculation of Existing Unit Allocations Under the Final Transport Rule FIPs

Allocations under this final methodology for each existing unit are determined by applying the following steps.

1. For each unit in the list of potential existing Transport Rule units, annual heat input values for the baseline period of 2006 through 2010 are identified using data reported to EPA or, where EPA data is unavailable, using data reported to the Energy Information Administration (EIA). For a baseline year for which a unit has no data on heat input (*e.g.*, for a baseline year before the year when a unit started operating), the unit is assigned a zero value. (Step 2 explains how such zero values are treated in the calculations.) The allocation method uses a 5-year

baseline to approximate a unit's normal operating conditions over time.

2. For each unit, the three highest, non-zero annual heat input values within the 5-year baseline are selected and averaged. Selecting the three highest, non-zero annual heat input values within the five-year baseline reduces the likelihood that any particular single year's operations (which might be negatively affected by outages or other unusual events) would determine a unit's allocation. If a unit does not have three non-zero heat input values during the 5-year baseline period, EPA averages only those years for which a unit does have non-zero heat input values. For example, if a unit has only reported data for 2008 and 2009 among the baseline years and the reported heat input values are 2 and 4 mmBtus, respectively, then the unit's average heat input used to determine its pro-rata share of the state budget is (2+4)/2 = 3.

3. Each unit is assigned a baseline heat input value calculated as described in step 2, above, referred to as the ''3-year average heat input.''

4. The 3-year average heat inputs of all covered existing units in a state are summed to obtain that state's total ''3-year average heat input.''

5. Each unit's 3-year average heat input is divided by the state's total 3-year average heat input to determine that unit's share of the state's total 3-year average heat input.

6. Each unit's share of the state's total 3-year average heat input is multiplied by the existing-unit portion of the state budget (*i.e.*, the state budget minus the state's new unit set-aside and, if applicable, minus the Indian country new unit set-aside) to determine that unit's initial allocation.

7. An 8-year (2003–2010) historic emissions baseline is established for SO_2, NO_X, and ozone-season NO_X based on data reported to EPA or, where EPA data is unavailable, based on EIA data. This approach uses this 8-year historic emissions baseline in order to capture the unit-level emissions before and after the promulgation of CAIR.

8. For each unit, the maximum annual historic SO_2 and NO_X emissions are identified within the 8-year baseline. Similarly, the maximum ozone season NO_X emissions from the 8-year baseline for each unit are identified. These values are referred to as the ''maximum historic baseline emissions'' for each unit.

9. If a unit has an initial historic heat-input based allocation (as determined in step 6) that exceeds its maximum historic baseline emissions (as determined in step 8), then its allocation equals the maximum historic baseline emissions for that unit.

10. The difference (if positive) under step 9 between a unit's historic heat-input-based allocation and its ''maximum historic baseline emissions'' is reapportioned on the same basis as described in steps 1 through 6 to units whose historic heat-input-based allocation does not exceed its maximum historic baseline emissions. Steps 7, 8, and 9 are repeated with each revised allocation distribution until the entire existing-unit portion of the state budget is allocated. The resulting allocation value is rounded to the nearest whole ton using conventional rounding.

Table VI.D–1 below provides an illustrative application of the steps 1–10 in a hypothetical state.

TABLE VI.D–1—DEMONSTRATION OF ALLOCATIONS USING FINAL ALLOCATION METHODOLOGY IN A THREE-UNIT STATE WITH AN 80-TON STATE BUDGET

	Steps 1–6	Steps 7, 8, 9	Steps 1–9 reiterated	Step 10
	Initial historic heat input-based allocation	Maximum historic baseline emissions	Revised historic heat input-based allocation	Final allocation
Unit A	20	16	N/A	16
Unit B	30	50	32	32
Unit C	30	50	32	32

2. Allocations to New Units

EPA is finalizing—similar to the proposal (75 FR 45310)—an approach to allocate emission allowances to new units from new unit set-asides in each state. A ''new unit'' may be any of the following: (1) A covered unit commencing commercial operation on or after January 1, 2010; (2) any unit that becomes a covered unit by meeting applicability criteria subsequent to January 1, 2010; (3) any unit that relocates into a different state covered by the Transport Rule; [81] and (4) any existing covered unit that stopped operating for 2 consecutive years but resumes commercial operation at some point thereafter.

The proposed Transport Rule would have required that owners and operators initially request allowances from the new unit set-aside when the unit first became eligible for an allocation. EPA now believes that it can identify which units become eligible and when they become eligible, based on information provided in other submissions (*e.g.*, certificates of representation, monitoring system certifications, and quarterly emissions reports) that the final rule already requires such units to make to EPA. EPA concludes that requiring owners and operators to submit requests of new unit set-aside allocations would impose an unnecessary burden on the owners and operators, as well as on EPA, and therefore EPA has removed this requirement in the final rule.

The following sections describe the methodology in the final Transport Rule for allocating to new units, how EPA determined the size of new unit set-asides in the final rule, and how EPA has provided for allocations to new units that locate in Indian Country.

a. New Unit Allocation Methodology

The proposal's new unit allocation methodology did not provide any allocation for a new unit's first control period of commercial operation. Some commenters expressed concern about the lack of new unit allocations the first year of commercial operation. In order to address this concern, EPA is modifying the new unit allocation methodology in this final rule to include allocations to new units for the first control period in which the units are in commercial operation, as well as for control periods in subsequent years.

[81] Existing- or new-unit allocations drawn from the budget of the relocated unit's original state are replaced by new unit set-aside allocations from the budget of the unit's relocation state in order to generally ensure that allocations are drawn from the correct state budget.

The final rule's allocation to new units is performed in two ''rounds.'' The first round is the same as the new unit allocation procedures in the proposal (except for elimination of the requirements that owners and operators request the allocations) and occurs during the control period for which the allocations are made. These first round allocations are based on new unit emissions during the prior control period and are recorded in allowance accounts in the Allowance Management System for the units by August 1 of each control period. For example, for the 2012 vintage year, ''first-round'' allocations would be made to new units by August 1, 2012 based on their emissions in the 2011 control period (as monitored and reported in accordance with Part 75 of the Acid Rain Program regulations). If the new unit set-aside is insufficient to accommodate first round allocations reflecting all new units' prior control period emissions, the first round allocations are made pro rata to new units based on their share of total new unit emissions in the prior control period.

The second round of allocations accommodates new units that come online during the control period for which the allocations are made and did not therefore receive any allocation in the first round. The second round also accommodates new units that come online partway into the prior control period and therefore received an allocation in the first round that did not extend to cover operations in a full control period. This second round of new unit allocation is therefore applicable only to new units coming online either during the control period of the allocation or during the control period immediately prior. New units coming online earlier than the previous control period only receive first-round allocations from the new unit set-asides, as first-round allocations to those units are based on operational data spanning an entire control period.

Second-round allocations are based on new unit emissions during the same control period as the vintage year of the allowances allocated. For example, for the 2012 vintage year, ''second-round'' allocations are based on the difference between the new unit's emissions in the 2012 control period and the new unit allocation (if any) that the unit received in the first round of allocations. For a unit coming online in 2012, this amount equals its total emissions during the 2012 control period. For a unit coming online in 2011, this amount equals its incremental emissions in 2012 beyond its emissions in 2011, as such a unit would have already received a first-round allocation from the new unit set-aside based on its emissions in 2011. Second-round allocations are recorded in allowance accounts by November 15 for the NO_X ozone season trading program (ahead of the December 1 compliance deadline) and by February 15 of the following calendar year for NO_X and SO_2 annual trading programs (ahead of the March 1 compliance deadline).

This methodology only allocates in the second round whatever allowances remain in the new unit set-asides after the first-round allocations have been recorded. If the new unit set-aside available for second round allocations is insufficient to accommodate allocations based on the difference between control period emissions and any first round allocations for the units involved, then the second round allocations are made pro rate to the new units based on their share of the total of such differences.

b. Determination of New Unit Set-Asides

The proposed Transport Rule identified new units using a threshold online date of January 1, 2012, whereas the final Transport Rule uses a threshold online date of January 1, 2010. As explained above, EPA adjusted this cutoff date because the final Transport Rule's allocation methodology for existing units requires that EPA possess at least 1 full year of historic data in order to calculate allocations. As a consequence, EPA recognizes that the proposal's methodology to determine the size of the new unit set-asides based only on new EGUs forecast by the model would fail to account for known EGUs that have come online, or are planned to come online, after January 1, 2010. Therefore, EPA has modified its approach to determining the size of the new unit set-asides in the final rule to account for both ''potential'' units (*i.e.*, those that are not yet planned or under construction but are projected by modeling to be built) and ''planned'' units (*i.e.*, those that are known units with planned online dates after January 1, 2010). EPA uses the distinction between ''potential'' and ''planned'' new units to determine the ultimate size of each state's new unit set-aside (as a percentage of that state's budgets for each pollutant covered); however, the new unit allocation methodology described above applies the same to ''potential'' and ''planned'' new units.

The first step of EPA's analysis to determine the new unit set-asides accounts for likely future emissions from potential units, and its methodology is taken directly from the Transport Rule proposal but reflects updated modeling (*see* ''Allowance Allocation to Existing and New Units Under the Transport Rule Federal Implementation Plans'' TSD for detailed findings). This analysis informed EPA's decision to establish a minimum new unit set-aside size of 2 percent of each state's budget for each pollutant that is configured to accommodate future emissions from potential units.

For the final rule, EPA augmented its new unit set-aside determination to account for ''planned'' units through an additional step. Because the location of these ''planned'' units is known and identified in EPA modeling, this second step is a state-specific modification of the size of the new unit set-asides. That is, EPA only increased new unit set-asides above the 2 percent minimum established in the first step for states that had additional known units coming online between January 1, 2010, and January 1, 2012.

The increases made to the new unit set-asides for these planned units reflect the projected emissions from these units. Therefore, if the expected emissions of a given pollutant from all ''planned'' new units in a given state were equal to 3 percent of that state's budget for that pollutant, then EPA added that amount to the base 2 percent new unit set-aside (creating a hypothetical new unit set-aside of 5 percent for that pollutant in that state). *See* ''Allowance Allocation to Existing and New Units Under the Transport Rule Federal Implementation Plans'' TSD for detailed results showing how EPA determined the size of each new unit set-aside reflecting the application of both of the steps described above. This approach to determining the size of state new unit set-asides is a logical outgrowth of the proposal, the NODA on allowance allocations, and updated modeling results. In fact, EPA received comments that using a January 1, 2010 cutoff date for distinguishing between existing and new units would result in the new unit set-aside, as proposed, being insufficient to meet the needs of units already under construction. EPA believes that the approach adopted in the final rule results in new unit set-asides that reasonably accommodate the foreseeable emissions from both planned and potential new units in each state.

The new unit allocation percentages for each state are shown in Table VII.D.2–1.

TABLE VII.D.2–1—PERCENTAGE OF STATE EMISSION BUDGETS FOR ALLOWANCES IN STATE NEW UNIT SET-ASIDES

	Annual SO_2	Annual NO_X	Ozone-season NO_X
Alabama	2%	2%	2%
Arkansas	.....	.....	2%
Florida	.....	.....	2%
Georgia	2%	2%	2%
Illinois	5%	8%	8%
Indiana	3%	3%	3%
Iowa	2%	2%	.....
Kansas	2%	2%	.....
Kentucky	6%	4%	4%
Louisiana	.....	.....	3%
Maryland	2%	2%	2%
Michigan	2%	2%	.....
Minnesota	2%	2%	.....
Mississippi	.....	.....	2%
Missouri	2%	3%	.....
Nebraska	4%	7%	.....
New Jersey	2%	2%	2%
New York	2%	3%	3%
North Carolina	8%	6%	6%
Ohio	2%	2%	2%
Pennsylvania	2%	2%	2%
South Carolina	2%	2%	2%
Tennessee	2%	2%	2%
Texas	5%	3%	3%
Virginia	4%	5%	5%
West Virginia	7%	5%	5%
Wisconsin	5%	6%	.....

c. Procedures for Allocating New Unit Set-Asides

For the first round of new unit set-aside allocations, the Administrator will promulgate a notice of data availability informing the public of the specific new unit allocations and provide an opportunity for submission of objections on the grounds that the allocations are not consistent with the requirements of the relevant final rule provisions. A second notice of data availability will subsequently be promulgated in order to make any necessary corrections in the specific new unit allocations. As discussed elsewhere in this preamble, the final rule establishes a different schedule for promulgation of these notices of data availability than the proposed rule. In particular, a single set of deadlines (*i.e.*, for the first notice in the first round of allocations, June 1 of the year for which the new unit allocations are described in the notice and, for the second notice of the first round, August 1 of that year) for promulgation of the notices is established for all of the Transport Rule trading programs. EPA believes that these deadlines will provide sufficient time for EPA to obtain final emissions data for the prior year for the units involved and to calculate the allocations and promulgate the notices. Further, the approach of using the same deadline for all of the Transport Rule trading programs will simplify EPA's implementation and reduce the complexity of the process for source owners and operators.

For the second round of new unit set-aside allocations, the Administrator will also promulgate two notices of data availability. However, the deadlines for the notices differ for the NO_X ozone season trading program and for the SO_2 and NO_X annual trading programs because control period emissions data (used in making second round allocations) become available sooner, and the compliance deadline for holding allowances covering emissions is sooner, in the NO_X ozone season trading program. The control period in the NO_X ozone season program ends on September 30, and fourth quarter emissions reports must be submitted to EPA by October 30, while the control periods in the SO_2 and NO_X annual programs end on December 31 and fourth quarter emission reports are due by January 30. Further, in order for the second round allocations to be available to be used for compliance with the allowance-holding requirement, the second round needs to be completed before the compliance dates, which are December 1 in the NO_X ozone season program and March 1 in the SO_2 and NO_X annual programs. Consequently, for the NO_X ozone season program the Administrator will promulgate by September 15 a notice of data availability identifying the units eligible for second round allocations and by November 15 a second NODA of the list of eligible units and their second round allocations, which will also be recorded in the allowance accounts by that date. The comparable deadlines for the SO_2 and NO_X annual programs are December 15 and February 15. EPA believes that these deadlines will provide sufficient time for EPA to identify the units and obtain their needed emissions data and to calculate the allocations and promulgate the notices.

d. Addition of Allowances to New Unit Set-Asides

As discussed elsewhere in this preamble, EPA proposed that, if a unit with an existing-unit allocation does not operate for 3 consecutive years, the allowances that would otherwise have been allocated to that unit, starting in the seventh year after the first year of non-operation, would be allocated to the new unit set-aside for the state in which the retired unit is located. EPA is retaining this provision in the final rule but is changing the time of non-operation to 2 years and the time of allowance allocation to a non-operating unit to 4 years. Starting in the fifth year of non-operation, allowances will be allocated to the new unit set-aside for the state in which the non-operating unit is located.

EPA received comments that the new unit set-asides were not sufficient to

encourage the operation of new units. One commenter suggested that allowance allocations should cease after 3 years of non-operation because the financial incentive gained from receiving allowances beyond the 3-year period is insignificant relative to operating and fuel costs. Another commenter said that providing allowances to non-operating units is unnecessary and distorts the market.

In addition to increasing the size of the new unit set-aside in this final rule, as described above, EPA is terminating existing unit allocations starting in the fifth year after the unit does not operate for 2 consecutive years and reallocating to the new unit set-aside the allowances that the unit otherwise would have received for the fifth and subsequent years in order to make them available for new units in the state. This approach allows the new unit set-asides to grow over time.

e. Allocations to New Units Locating in Indian Country

EPA received several comments on the proposed rule that it did not explicitly address the distribution of allowances to potential new units built in Indian country. EPA recognized this concern and requested comment on this topic in the January 7, 2011 NODA.

In the final rule, EPA is providing a mechanism to make allowances available in the future for new units built in Indian country. The final rule establishes an Indian country new unit set-aside for each pollutant in each state whose borders encompass Indian country (*i.e.,* Florida, Iowa, Kansas, Louisiana, Michigan, Minnesota, Mississippi, Nebraska, New York, North Carolina, South Carolina, Texas, and Wisconsin). EPA will retain administration of these Indian country new unit set-asides as part of the Transport Rule trading programs whether or not a Transport Rule state elects to modify or replace the Transport Rule FIPs through approved SIP revisions. EPA does not create Indian country new unit set-asides for states lacking Indian country within their borders.

EPA determined the size of each Indian country new unit set-aside by calculating the ratio of square mileage of Indian country to the square mileage of the state within whose borders Indian country is located. This calculation yielded a maximum percentage of 5 percent when assessing all of the states encompassing Indian country subject to the final Transport Rule; this is referred to as the ''5 percent Indian country factor'' below. To determine the maximum percentage, EPA used the American Indian Reservations/Federally Recognized Tribal Entities dataset, which contains data for the 562 federally recognized tribal entities in the contiguous U.S. and Alaska. EPA accessed the data to analyze the Transport Rule region and compare the square miles of Indian country with the square miles of the Transport Rule state that includes the Indian country. EPA then took the highest percentage as the number to be applied across all states with Indian country to determine the size of the Indian country new unit set-aside pertinent to that state's budgets under the Transport Rule. EPA chose to use the maximum percentage (5 percent) from the Indian country analysis to determine the Indian country set-aside for each state on the basis that this approach would reserve a reasonable number of allowances from each state's budget for potential allocation to new units that may locate in Indian country within that state's borders. Any allowances from the Indian country new unit set-aside that are not allocated in a given control period are redistributed into the state's new unit set-aside. As discussed above, any allowances not allocated from that new unit set-aside are redistributed to existing units based on the existing units' share of the total existing unit allocations.

To calculate the size of each tribal new unit set-aside, EPA applied this 5 percent Indian country factor to the portion of the state's new unit set-aside originally determined by accounting for ''potential'' new units, which as described above was set at 2 percent of each pollutant's budget in each state. Therefore, the Indian country new unit set-aside is 5 percent of 2 percent of a state's budget, or 0.1 percent of that total state budget. EPA did not apply the 5 percent Indian country factor to the state-specific planned unit portion of each state's new unit set-aside because the planned unit portion is determined using projected emissions from specific, known units coming online after January 1, 2010, and none of these known units are located in Indian country.

The Indian country new unit set-asides in the following Transport Rule states with Indian Country are shown in Table VII.D.2–2.

TABLE VII.D.2–2—NEW UNIT SET-ASIDE ALLOWANCES FOR INDIAN COUNTRY

[Tons]

	SO_2 2012–2013	SO_2 2014 and beyond	Annual NO_X 2012–2013	Annual NO_X 2014 and beyond	Ozone-season NO_X 2012–2013	Ozone-season NO_X 2014 and beyond
Florida	.....	.....	.....	.....	28	28
Iowa	107	75	38	38	.....	.....
Kansas	42	42	31	26	.....	.....
Louisiana	.....	.....	.....	.....	13	13
Michigan	229	144	60	58	.....	.....
Minnesota	42	42	30	30	.....	.....
Mississippi	.....	.....	.....	.....	10	10
Nebraska	65	65	26	26	.....	.....
New York	27	19	18	18	8	8
North Carolina	137	58	51	42	22	18
South Carolina	89	89	32	32	14	14
Texas	244	244	134	134	63	63
Wisconsin	80	40	32	30	.....	.....

Under the FIPs, EPA allocates allowances from Indian country new unit set-asides in essentially the same manner as it allocates allowances from state new unit set-asides. The approach for identifying, and determining the number of allowances allocated to, new units in Indian country is the same as the approach for identifying and determining allocations for non-Indian country new units covered by the state new unit set-aside, and allocations are made in two rounds using the same schedules for promulgation of notices of data availability. However, as discussed above, unallocated allowances in the Indian country set-asides are handled differently from unallocated allowances in the state new unit set-asides in that unallocated Indian country new unit set-aside allowances are first transferred back into the state new unit set-aside and then, if still not allocated to new units, are distributed to existing units in the state. EPA believes that the above-described approach in establishing and handling the Indian country new unit set-asides and state new unit set-asides is a reasonable way of making a sufficient amount of allowances available for new units in the state and Indian country located in the state and ensuring that the entire state budget is available to either new or existing units in the state and Indian country. EPA retains administration of these Indian country new unit set-asides (and, of course, the portions of state budgets that comprise these set-asides) as part of the Transport Rule trading programs even if a state elects to modify or replace the Transport Rule FIPs through approved SIP revisions. EPA continues to manage and distribute the Indian country new unit set-aside allowances in the same manner as under the FIPs. Unallocated allowances in the Indian country new unit set-aside will be returned to the portion of the state budget allocated under the approved SIP's allocation provisions. EPA believes that this approach is reasonable because EPA, rather than the states, has the authority and responsibility of administering the Transport Rule with regard to new units that locate in Indian country.

E. Assurance Provisions

To ensure that the FIPs require the elimination of all emissions that EPA has identified that significantly contribute to nonattainment or interfere with maintenance within each individual state, the Agency is adopting assurance provisions in addition to the requirement that sources hold allowances sufficient to cover their emissions. These assurance provisions limit emissions from each state to an amount equal to that state's trading budget plus the variability limit for that state (*i.e.,* the state assurance level). As discussed in section VI of this preamble, this variability limit takes into account the inherent variability in baseline EGU emissions and recognizes that state emissions may vary somewhat after all significant contribution to nonattainment and interference with maintenance are eliminated. This approach also provides sources with flexibility to manage growth and electric reliability requirements, thereby ensuring the country's electric demand will be met, while meeting the statutory requirement of eliminating significant contribution to nonattainment and interference with maintenance.

Starting in 2012, EPA is establishing, as part of the FIPs, limits on the total emissions that may be emitted from EGUs at sources in each state. For any single year, the state's emissions must not exceed the state budget with the variability limit allowed for any single year for that state (*i.e.,* the state's 1-year variability limit). In other words, in addition to covered sources being required to hold allowances sufficient to cover their emissions, the total sum of EGU emissions in a particular state cannot exceed the state budget with the state's 1-year variability limit in any 1 year (*i.e.,* the state's assurance level). EPA is not finalizing 3-year variability limits that were included in the proposal for the reasons explained previously in section VI.E of this preamble. The state budgets, variability limits, and state assurance levels for each state are shown in Tables VI.F–1, VI.F–2 and VI.F–3 in section VI.F of this preamble. The basis for the variability limits is also described in section VI.E of this preamble. Additional details may be found in the Power Sector Variability Final Rule TSD in the docket to this rule.

To implement this requirement, EPA first evaluates whether any state's total EGU emissions in a control period exceeded the state's assurance level. If any state's EGU emissions in a control period exceed the state assurance level, then EPA applies additional criteria to determine which owners and operators of units in the state will be subject to an allowance surrender requirement. In applying the additional criteria, EPA evaluates which groups of units at the common designated representative (DR) level had emissions exceeding the respective common DR's share of the state assurance level (regardless of whether the source had enough allowances to cover its emissions) during the control period.[82]

The requirement that owners and operators surrender allowances under the assurance provisions will be triggered only if two criteria are met: (1) The group of sources and units with a common DR are located in a state where the total state EGU emissions for a control period exceed the state assurance level; and (2) that group with the common DR had emissions exceeding the respective DR's share of the state assurance level. The share of the assurance penalty borne by the owners and operators will be based on the amount by which the total emissions for the units in the group exceed the common DR's share of the state assurance level as a percentage of the total calculated for all such groups of sources and units in the state. Thus, the owners and operators of each such group of sources and units must surrender an amount of allowances equal to the excess of state EGU emissions over the state assurance level multiplied by the owners' and operators' percentage and multiplied by two (to reflect the penalty of two allowances for each ton of the state's excess EGU emissions). *See* Table VII.E–1 below for an illustrative example.

This approach in the final rule of implementing the assurance provisions on a common designated representative basis contrasts with the approach in the proposed rule of implementing the assurance provisions on an owner basis. In the January 7, 2011 NODA, EPA requested comment on the alternative of basing the assurance provision penalty using common designated representatives, and some commenters supported this alternative. The common designated representative approach is simpler and avoids the need to collect information on percentage ownership (which information is not used in any other provisions of the Transport Rule trading programs).

In addition, the common designated representative approach provides additional flexibility to owners and operators who have only one or a few units in a given state but have the option of selecting a common designated representative with owners and operators of other units in the state. EPA expects companies in various states will readily be able to manage their

[82] A group of one or more sources and units in a state has a common designated representative where the same individual is authorized as the designated representative (not the alternate designated representative) for that group of sources and units as of April 1 immediately following the allowance transfer deadline for the control period involved.

emissions to stay collectively below their state's assurance levels as they track emissions quarterly throughout the year and manage their generation units and pollution control efforts accordingly. However, if the state appears to be approaching its assurance level, this final rule also gives companies the ability to further ensure that they will not have excess emissions by combining multiple units under a common DR. This flexibility allows utilities to re-balance allowances and emissions to mitigate penalty risk if the state violates its assurance level. In a state that does not appear to risk violating its assurance level in a given period, utilities would not need to consider the assurance aspect of selecting DRs. However, EPA anticipates that in the event utilities desire additional certainty or mitigation of assurance penalty risk, they will take advantage of this common DR provision or pursue similar private arrangements with each other to cover their emissions at the lowest possible cost.

While the DR provision could benefit utilities by allowing them to pool their penalty risk, the utilities would still be subject to the antitrust laws. As with any joint venture between competitors, the efficiency benefits of pooling risk would be weighed against any anticompetitive harm associated with DRs.

This new feature in the final rule, in conjunction with the simplifications to the final rule's variability limits described in section VI.E, will give companies under the air quality-assured trading program greater flexibility in each state to determine the most cost-effective pattern of emission reductions while EPA ensures each state meets its assurance level needed to address the significant contribution in each state.

In the January 7, 2011 NODA, EPA also requested comment on continuing to link allocations to assurance provision allowance surrender requirements. Even though the final rule uses a different allowance allocation methodology than the allocation methodology that was proposed, the final rule continues to treat the groups of units with greater emissions than their allocations plus share of state variability as responsible for the state's excess of emissions over the state assurance level. EPA believes that this approach is reasonable because any state that exceeds its state assurance level likely does so because not all units have made the reductions necessary to eliminate the state's contribution to nonattainment or interference with maintenance. Moreover, the groups of units with emissions exceeding their allocations plus share of variability are the units most likely to have contributed to the state's exceedance of its state assurance level and thus to the state's triggering of the assurance provisions. Consequently, EPA concludes that it is reasonable to penalize owners and operators of those sources and units (grouped by common DR) for the state's exceedance through application of the assurance provision allowance surrender requirement. Some commenters stated that this is a reasonable approach.

While a few commenters suggested alternative approaches to the assurance provisions, EPA believes that the suggested alternatives are not workable and are likely to create implementation problems. These commenters suggested variations of approaches that would have created state-specific and vintage year-specific allowances that would have been traded independently of compliance allowances. These differentiated allowances would have fragmented the allowance markets and made the programs resemble the intrastate trading option that EPA rejected because of market power and other concerns described in the proposal.

The existence of the assurance provisions with significant penalties imposed if a state's emissions exceed the state budget with the variability limit, along with other features of the Transport Rule trading programs discussed below, will ensure that state emissions stay below the level of the budget with the variability limit. In making compliance decisions and determining to what extent to rely on purchased or banked allowances, owners and operators will have to take into account the risk of triggering the assurance provisions in the state involved and of incurring significant assurance provision penalties. The greater the extent to which units sharing a common DR have emissions exceeding the DR units' allocations plus share of the state variability limit, the greater the risk of being subject to the assurance provision penalties.

As discussed previously in section VII.D.2, EPA allocates allowances to a new unit for the control period during which the unit commences commercial operation from the new unit set-aside based on its emissions. In the case where assurance provisions for a state are triggered in the year that a new unit commences operation, the unit's share of the state assurance level is calculated using the unit's allocation from the new unit set-aside plus its proportional share of the variability limit. There is the possibility that a new unit would receive no allocation for the control period during which the unit commences commercial operation. EPA sees no reasonable basis for disadvantaging owners and operators because they started up a new unit and EPA had no emissions data on which to base an allocation from the new unit set-aside or no allowances were available for the unit in the state's new unit set-aside.[83] For these new units, EPA would use a specific surrogate number to calculate the maximum amount of emissions that the unit would likely have had during that year. The surrogate emission number applies only if the state's assurance provisions are triggered and only in the first year of the new unit's commercial operation for a new unit that did not receive an allocation from the set-aside. The methodology for calculating the surrogate emission number is essentially unchanged from the proposal (75 FR 45313). For more details on capacity factors for new units, see ''Capacity Factors Analysis for New Units Final Rule TSD.''

These assurance provisions are above and beyond the fundamental requirement for each source to hold enough allowances to cover its emissions in the control period. Failure to hold enough allowances to cover emissions is a violation of the CAA, subject to an automatic penalty and discretionary civil penalties, as described in section VII.F of this preamble.

Several features of the air quality-assured trading programs work in conjunction with the assurance provisions to ensure state emissions do not exceed state assurance levels. The air quality-assured trading programs have: State-specific budgets that do not include the variability limits and that are the basis for allocating allowances in each state so that total allocations in a state cannot exceed the state budget; a requirement that owners and operators of each source hold enough allowances to cover source emissions for each control period; assurance provisions that require owners and operators to hold a significant amount of additional allowances in a state if the assurance provisions are triggered; and additional penalties for failing to hold sufficient allowances under the assurance provisions. The underlying mechanism of cap and trade—with a cap on allowances issued and a requirement to

[83] Some other units (*e.g.,* those units with no data for the 2006–2010 base period) may have a zero allocation for a control period. However, those are highly likely to be units that will continue to operate rarely or not at all and so will incur little or none of the assurance provision penalties.

hold allowances covering emissions—has succeeded, even without assurance provisions, in broadly reducing emissions below allowance allocation levels. The accumulated data, history, and experience from cap and trade programs underscore that emission reduction requirements and environmental and public health goals of the programs have been met and, in many instances, exceeded. Additionally, EPA has now added assurance provisions to ensure that emissions within a state do not exceed the state budget with the variability limitation that eliminates the state's significant contribution to nonattainment and interference with maintenance in downwind states.

Emissions from a common DR's group of units in excess of the DR's share of the state budget with the variability limit are not a violation of the rule or the CAA, but do lead to strict allowance surrender requirements. Specifically, the owners and operators with a common DR will be required to surrender two allowances for each ton of their proportional share of the exceedance of the state budget with the variability limit. Failing to hold sufficient allowances to meet the allowance surrender requirement will be a violation of the regulations and the CAA and subject to discretionary civil penalties under CAA section 113. Allowances surrendered to meet an assurance provision penalty may be from the year immediately following the control period in which the state assurance level was exceeded (*i.e.,* the year during which the penalty is assessed) or any prior year. Any future vintage allowances beyond the year in which the penalty is assessed may not be used to meet an assurance provision penalty.

This penalty level is a change from the proposal, in which one allowance was to be surrendered for each ton of emissions over the state assurance level. EPA ran an IPM modeling scenario in order to assess the level of penalty that would be sufficient to deter sources from exceeding state assurance levels. According to the model, no state would exceed its assurance level and incur the two-for-one allowance penalty in either 2012 or 2014, although some states emit up to the assurance level. The two-for-one allowance surrender requirement is significant, and EPA believes that this penalty—along with the other elements of the Transport Rule discussed above—will be sufficient to ensure that the state emissions will not exceed the budgets plus the variability limits. *See* the Assurance Penalty Level Analysis Final Rule TSD for further details of the analysis.

Below are examples of how the penalty will be assessed for four common designated representatives in the same state if the assurance provisions are triggered. In the first case, DR1's combined units were allowed to emit up to 71 tons of SO_2 (60 * 118 percent), but actually emitted 75 tons during the control period, or 4 more than their share of the state assurance level. Since the state, as a whole exceeded the state assurance level by 15 tons, DR1's share of the penalty is 25 percent of the total penalty, or 8 allowances (25 percent of 30).

FIGURE VII.E–1—ASSURANCE PROVISION ALLOWANCE SURRENDER EXAMPLE

	Allowances allocated	Allocation + share of variability	Total emissions	Emissions above allocation	Emissions above allocation + share of variability	Share of state exceedance (%)	Penalty (allowances surrendered)
DR1	60	71	75	15	4	25%	8
DR2	20	24	33	13	9	56%	17
DR3	10	12	15	5	3	19%	6
DR4	10	12	10	0	−2	0%	–
Total	100	118	133	33	15	100%	30

DR1, DR2, DR3, and DR4 are all in the same state.
State budget plus 18 percent variability limit is 118 tons (100 + 18 = 118).
State exceeded its assurance level by 15 tons (133 − 118 = 15).
Penalty is 2 allowances per ton over the assurance level (2 × 15 = 30).
Some numbers may not add up due to rounding.

In the proposal, EPA took comment on whether assurance provisions should be implemented starting in 2012 or 2014. While a number of commenters supported the proposal to start in 2014, EPA received several comments making the case that starting assurance provisions in 2012 would be more compatible with the Court's opinion in *North Carolina,* which emphasized EPA's obligation to require elimination of emissions within the states that significantly contribute to nonattainment or interfere with maintenance. In this final rule, EPA makes the assurance provisions effective starting in 2012 because this approach provides even further assurance, consistent with *North Carolina,* that each state's prohibited emissions will be eliminated from the start of the Transport Rule trading programs.

F. Penalties

Under the final Transport Rule FIPs (like under the proposed rule), the owners and operators of each covered source must hold, as of the allowance transfer deadline, an allowance for each ton of SO_2 or NO_X emitted by the source and are subject to penalties if they fail to comply with this allowance-holding requirement.

In particular, the owners and operators must hold in the source's compliance account in the Allowance Management System enough allowances issued for the respective Transport Rule annual trading program (SO_2 Group 1, SO_2 Group 2, or annual NO_X program) to cover the annual emissions of the relevant pollutant from all covered units at the source. The allowances must have been issued for the year in which the emissions occurred or a prior year. If the owners and operators fail to meet this allowance-holding requirement, they must provide—for deduction by the Administrator from the source's compliance account—one allowance as an offset, and one allowance as an excess emissions penalty, for each ton of emissions (*i.e.,* excess emissions) in excess of the amount of allowances held. The allowances surrendered for the excess emissions penalty must be allocated for the control period in the year immediately following the year when the excess emissions occurred or for a control period in any prior year. The offset and the excess emissions penalty are automatic requirements in

that they must be met without any further action by EPA (*e.g.,* any additional proceedings) regardless of the reason for the occurrence of the excess emissions. In addition, each ton of excess emissions, as well as each day in the averaging period (*i.e.,* the control period of one calendar year), constitute a violation of the CAA, and the maximum discretionary civil penalty is $25,000 (inflation-adjusted to $37,500 for 2010) per violation under CAA section 113. This means that, if a source has emissions in excess of allowances held for the source as of the allowance transfer deadline for a control period, the number of tons of excess emissions multiplied by the total number of days in that control period and multiplied by $25,000 (inflation adjusted) equals the maximum discretionary civil penalty for that occurrence of excess emissions.

For the ozone-season NO_X trading program, the same provisions apply as for an annual program, except that the averaging period (*i.e.,* the control period) is the ozone season, not a calendar year. Consequently, the relevant emissions are for an ozone season, the allowances usable to meet the allowance-holding requirement are allowances issued for Transport Rule ozone-season NO_X trading program for the ozone season involved or a prior ozone season, and the number of days used in calculating the maximum civil penalty is the number in the ozone season.

Commenters expressed concern that the proposed FIPs expressly stated that, for purposes of determining the maximum discretionary civil penalty for failure to meet the allowance-holding requirement, each ton of emissions lacking a held allowance would be a violation and each day in the averaging period involved would be a violation. Some commenters compared the proposed penalty provisions for excess emissions with the excess emissions penalty provisions under the Acid Rain Program and claimed that the proposed penalty provisions differed from the Acid Rain Program provisions and were excessive.

In fact, however, the final FIP provisions concerning discretionary civil penalties are essentially the same as those under the Acid Rain Program, as well as those under the NO_X Budget Trading Program and the CAIR trading programs. In particular, the Acid Rain Program regulations state that each ton of SO_2 excess emissions constitutes ''a separate violation'' of the CAA. 40 CFR 72.9(c)(2). Moreover, while the Acid Rain Program regulations do not expressly address that each day in the averaging period (*i.e.,* a calendar year control period under the Acid Rain Program) constitutes a separate violation when a unit has excess emissions for the calendar year, the courts have addressed this question. In decisions applying the discretionary civil penalty provisions in section 309(d) of the Clean Water Act, which are analogous to the civil penalty provisions in CAA section 113, the courts have interpreted the provisions to mean that, when a source violates the emission limitation for a multi-day control period, the source has a violation for each day in the control period, as well as for each ton of excess emissions on each such day. *See, e.g., Chesapeake Bay Foun.* v. *Gwaltney of Smithfield,* 791 F.2d 304, 313–15 (4th Cir. 1986), *Atlantic States Legal Foun.* v. *Tyson Foods,* 897 F.2d 1128, 1139–40 (11th Cir. 1990), and *U.S.* v. *Allegheny Ludlum Corp.,* 366 F.3d 164, 169 (3d. Cir. 2004). As noted by the courts, the treatment of each ton and each day as a separate violation is used for purposes of setting the maximum discretionary civil penalty. Because CAA section 113 sets the maximum civil penalty, EPA, of course, has the discretion to tailor the penalty amount that it seeks in any specific occurrence of excess emissions to reflect the circumstances of that excess emission occurrence. *See* 42 U.S.C. 7413(b) (stating that the Administrator may commence a civil action ''to assess and recover a civil penalty of not more than $25,000 per day for each violation''). Moreover, when a district court imposes a civil penalty, the court ''retains discretion to assess a penalty much smaller than the maximum, as the situation requires.'' *Chesapeake Bay,* 791 F.2d at 316. In addition, the Acid Rain Program regulations state that any allowance deduction, excess emission penalty, or interest under the Acid Rain Program regulations ''shall not affect liability'' of the owners and operators ''for any additional fine, penalty, or assessment, or their obligation to comply with any other remedy, for the same violation, as ordered under the [CAA],'' including under CAA section 113 providing for discretionary civil penalties. 40 CFR 77.1(b). In summary, under the Acid Rain Program, each ton of excess emissions and each day in the averaging period (*i.e.,* the calendar year) constitute a violation, the resulting number of violations times $2,000 is the maximum civil penalty for violating owners and operators, and EPA has the discretion to impose a civil penalty at or below such maximum, in addition to the automatic requirement to surrender one allowance and pay $2,000 (inflation adjusted) for each ton of excess emissions.

The final FIPs take an analogous approach to that under the Acid Rain Program. Specifically, the final FIPs state both that each ton of excess emissions is a violation of the CAA and that each day in the averaging period (*i.e.,* a calendar year under the annual programs and the ozone season under the ozone-season program) is a violation. Moreover, the imposition of civil penalties at or below the maximum amount resulting from the maximum penalty calculation is in addition to the automatic allowance surrender and penalty totaling 2 allowances per ton of excess emissions. Thus, commenters' assertion that the approach in the final FIPs is inconsistent with the approach in the Acid Rain Program is incorrect. Moreover, EPA has taken this same general approach in two other trading programs (*i.e.,* the NO_X Budget Trading Program and the CAIR trading programs), whose regulations explicitly state that each ton and each day of the averaging period constitute a violation. *See* 40 CFR 96.54(d)(3) (NO_X Budget Trading Program); and 40 CFR 96.106(d) (CAIR).

In any event, EPA maintains that the approach of treating each excess emission ton and each day in the averaging period as a violation for purposes of calculating the maximum discretionary civil penalty is reasonable. Some commenters suggested that only the days on which a source's cumulative control period emissions exceed the amount of allowances that the source then holds for that control period should be treated as a violation. However, this suggested approach makes little sense in the context of the Transport Rule trading programs.

In order to provide owners and operators compliance flexibility, the Transport Rule trading programs do not require source owners and operators to hold any amount of allowances to cover emissions until the allowance transfer deadline, no matter what the source's cumulative control period emissions are before that deadline. The commenters' approach of comparing—each day, cumulative emissions and allowances held—for purposes of calculating maximum civil penalties would be inconsistent with the flexibility that EPA intends to provide owners and operators. For example, under the commenters' suggested approach, owners and operators that buy or sell allowances in the allowance market or hold allowances in a company-wide account, do not transfer allowances into their source's compliance account until just before the allowance transfer deadline, and end up with some excess emissions for the calendar year would

face a significantly higher maximum civil penalty than owners and operators that every day increase the amount of allowances held in their source's compliance account as the source's cumulative emissions increase and end up with the same amount of excess emissions for the calendar year. In short, the commenters' approach would penalize owners and operators that use some of the compliance flexibility that the trading programs are intended to provide.

EPA also maintains that it is reasonable to both impose the automatic allowance surrender and penalty provisions and to retain the discretion to impose civil penalties for the same occurrence of excess emissions. This approach encourages compliance with the allowance-holding requirement by ensuring that violating owners and operators are penalized automatically (*i.e.,* without any further administrative or judicial proceedings, except for appeals) and that EPA can seek additional penalties where the circumstances warrant discretionary civil penalties. In fact, the Acid Rain Program, for which CAA Title IV mandated this approach, has achieved a very high level of compliance with the requirement to hold allowances covering SO_2 emissions and therefore resulted in major reductions in utility SO_2 emissions. *See* 42 U.S.C.7651j(a). Similarly, the NO_X Budget Trading Program and CAIR trading programs, which took the same approach, also have achieved very high compliance levels and major utility emission reductions.

EPA notes that, in calculating maximum civil penalties when owners and operators fail to hold allowances required under the assurance provisions in the final FIPs, EPA takes a similar approach in determining the number of violations. Each ton for which an allowance is not held as required and each day in the control period involved constitute a violation of the CAA. As discussed elsewhere in this preamble, EPA believes that this calculation approach is also reasonable in the context of the assurance provisions and that taking an approach like the commenters' suggested approach described above would be inconsistent with some of the flexibility that the Transport Rule trading programs are intended to provide.

G. Allowance Management System

The final Transport Rule trading programs, like the proposed preferred remedy, utilize EPA's allowance management system (AMS), which currently supports allowance surrender, transfer, and tracking activity under the Acid Rain Program and CAIR. EPA received no adverse comment on this aspect of the proposed rule.

The primary role of AMS is to provide an efficient, automated means for covered sources to comply and for EPA to determine whether covered sources are complying, with the emissions-related provisions of the Transport Rule trading programs. As was proposed, each of the final SO_2 trading programs and final NO_X trading programs is separately handled in the AMS, which is used to track Transport Rule trading program SO_2 and NO_X allowances held by covered sources, as well as such allowances held by other entities or individuals.

In addition, the AMS tracks: The allocation of all SO_2 and NO_X allowances; holdings of SO_2 and NO_X allowances in compliance accounts (*i.e.,* accounts for individual covered sources), general accounts (*i.e.,* accounts for other entities such as companies and brokers), and assurance accounts (*i.e.,* accounts for allowance surrender by owners and operators of groups of sources and units with common designated representatives under the assurance provisions); deduction of SO_2 and NO_X allowances for compliance purposes (including deductions from assurance accounts where necessary); and transfers of allowances between accounts. The AMS also allows the public to see whether each source is in compliance and provides information to the allowance market and the public in general, including information on ownership of allowances, dates of allowance transfers, buyer and seller information, and the serial numbers of allowances transferred.

H. Emissions Monitoring and Reporting

Under the proposed rule, units subject to the Transport Rule trading programs would monitor and report NO_X and SO_2 mass emissions in accordance with 40 CFR part 75, as incorporated in the proposed rule, and with certain other specified requirements, such as compliance deadlines.

In the final rule, like the proposed rule, covered units must comply with emissions monitoring and reporting requirements that are largely incorporated from Part 75 monitoring and reporting requirements.

Under the final rule and under Part 75, a unit has several options for monitoring and reporting, namely the use of: a CEMS; an excepted monitoring methodology (NO_X mass monitoring for certain peaking units and SO_2 mass monitoring for certain oil- and gas-fired units); low mass emissions monitoring for certain non-coal-fired, low emitting units; or an alternative monitoring system approved by the Administrator through a petition process. In addition, the Administrator can approve petitions for alternatives to Transport Rule and Part 75 monitoring, recordkeeping, and reporting requirements.

Further, the final rule and Part 75 specify that each CEMS must undergo rigorous initial certification testing and periodic quality assurance testing thereafter, including the use of relative accuracy test audits (RATAs) and 24-hour calibrations. In addition, when a monitoring system is not operating properly, standard substitute data procedures are applied and result in a conservative estimate of emissions for the period involved.

In addition, the final rule and Part 75 require electronic submission, to the Administrator and in a format prescribed by the Administrator, of a quarterly emissions report. The report must contain all of the data required concerning NO_X annual and ozone-season and SO_2 annual emissions.

Most Transport Rule units are in states subject to CAIR and are already monitoring and reporting NO_X and/or SO_2 under CAIR and the Acid Rain Program, which programs also use Part 75 monitoring and reporting. Units under the Transport Rule annual trading programs and in states subject to CAIR generally have no changes to their monitoring and reporting requirements. These units must continue to monitor and submit reports on a year-round basis as they have under CAIR. Therefore, units in the following states must monitor and report both SO_2 and NO_X year-round under the Transport Rule: Alabama, Georgia, Illinois, Indiana, Iowa, Kansas, Kentucky, Maryland, Michigan, Minnesota, Missouri, Nebraska, New Jersey, New York, North Carolina, Ohio, Pennsylvania, South Carolina, Tennessee, Texas, Virginia, West Virginia and Wisconsin.

Some states (Kansas, Minnesota, and Nebraska) subject to the Transport Rule annual trading programs were not subject to CAIR. Transport Rule units in those states must meet monitoring and reporting requirements that are new except to the extent the units were subject to Part 75 under some other program (such as the Acid Rain Program).

Further, some states (Florida, Louisiana, and Mississippi) subject to the Transport Rule ozone-season trading program but not the Transport Rule annual trading programs were subject to the annual and ozone-season trading programs under CAIR. Transport Rule

units in those states must continue to monitor and report in accordance with Part 75 but have the option of monitoring and reporting on a year-round or ozone-season-only basis.

In addition, one state (Arkansas) subject to the Transport Rule ozone-season trading program but not to the Transport Rule annual trading program was similarly subject to only the ozone-season trading program in CAIR. Transport Rule units in that state continue to have the option of monitoring and reporting NO_X on a year-round or ozone-season-only basis.

Finally, some states (Connecticut, Delaware, District of Columbia, and Massachusetts) that were subject to CAIR are not subject to the Transport Rule. Electric generating units in those states must continue to meet monitoring and reporting requirements only to the extent the units are subject to Part 75 under some other program (such as the Acid Rain Program or a state adopted program requiring such monitoring and reporting).

EPA is finalizing requirements for existing Transport Rule units in states covered by the Transport Rule annual trading programs to monitor and report SO_2 and NO_X emissions by January 1, 2012 programs and for existing Transport Rule units in states covered by the Transport Rule ozone-season trading program to monitor NO_X emissions by May 1, 2012. The use of Part 75 certified monitoring methodologies is required in both cases. As discussed previously, most covered existing units will generally have no changes to their monitoring and reporting requirements and will continue to monitor and submit reports under Part 75 as they have under CAIR. Existing units that have not been subject to Part 75 monitoring and reporting requirements in the past have less than 1 year to install, certify, and operate the required monitoring systems. EPA believes that these units will be able to comply with this requirement because the monitoring equipment needed is not extensive or is largely in place already for the purpose of meeting other requirements. Quality assurance and reporting provisions and data system upgrades may be necessary, but EPA believes that there is sufficient time to accomplish this by the deadline for existing units in the final rule.

In the proposed rule, the compliance deadline for installing, certifying, and operating the required monitoring systems at new units was based upon the date of commencement of commercial operation. A new unit would have to install and certify its monitoring system within 180 days of the commencement of commercial operation. The final rule adopts this deadline, which is consistent with the approach recently adopted in Part 75 under the Acid Rain Program. *See* 76 FR 17288, 17289 (March 28, 2011).

Using this deadline (rather than a deadline, used previously in Part 75, of the earlier of the unit's 90th operating day or 180 days after the unit's commencement of commercial operation) ensures that new units have sufficient time to complete installation and certification of monitoring systems and facilitates units' compliance. Because of unit shakedown problems, some new units have had difficulty meeting a deadline earlier than 180 days after commencement of commercial operation. Further, using this deadline facilitates owners' and operators, and EPA's, ability to track important dates related to monitoring, reporting, and allowance holding. Under the final rule, the requirement that a unit hold enough allowances to cover its emissions starts on the later of the commencement of the Transport Rule trading program involved or the deadline for installation and certification of the monitoring system. Having a simple, easily determined deadline (180 days after the commencement of commercial operation) makes it easier for owners and operators and EPA to determine when allowance-holding requirements begin, as well as when monitoring and reporting requirements begin. In contrast, using a deadline involving determination of a unit's 90th operating day required keeping track of any days on which the unit did not operate (*e.g.,* due to problems associated with shakedown of the unit). EPA found that owners and operators have had more difficulty reporting the 90th operating day than in reporting the commencement of commercial operation, and once the latter date is reported, EPA can independently determine the 180th calendar day after the reported date.

I. Permitting

1. Title V Permitting

The final Transport Rule (like the proposed rule) does not establish any permitting requirements independent of those under Title V of the CAA and the regulations implementing Title V, 40 CFR Parts 70 and 71.[84] All major stationary sources of air pollution and certain other sources are required to apply for title V operating permits that include emission limitations and other conditions as necessary to assure compliance with applicable requirements of the CAA, including the requirements of the applicable State Implementation Plan. CAA §§ 502(a) and 504(a), 42 U.S.C. 7661a(a) and 7661c(a). The ''applicable requirements,'' that must be addressed in title V permits are defined in the Title V regulations (40 CFR 70.2 and 71.2 (definition of ''applicable requirement'')).

EPA anticipates that, given the nature of the units covered by the final Transport Rule, most of the sources at which they are located are already or will be subject to Title V permitting requirements. For sources subject to Title V, the requirements applicable to them under the final FIPs will be ''applicable requirements'' under Title V and therefore will need to be addressed in the Title V permits. For example, requirements under the final FIPs concerning designated representatives, monitoring, reporting, and recordkeeping, the requirement to hold allowances covering emissions, the assurance provisions, and liability will be ''applicable requirements'' to be addressed in the permits.

The Title V permits program includes, among other things, provisions for permit applications, permit content, and permit revisions that will address the applicable requirements under the final FIPs in a manner that will provide the flexibility necessary to implement market-based programs such as the Transport Rule trading programs. For example, the Title V regulations provide that a permit issued under Title V must include, for any ''approved * * * emissions trading and other similar programs or processes'' applicable to the source, a provision stating that no permit revision is required ''for changes that are provided for in the permit.'' 40 CFR 70.6(a)(8) and 71.6(a)(8). Consistent with this provision in the Title V regulations, the Transport Rule trading program regulations include a provision stating that no permit revision is necessary for the allocation, holding, deduction, or transfer of allowances. Consistent with the Title V regulations, this provision will also be included in each Title V permit for a covered source. As a result, allowances can be traded (or allocated, held, or deducted) under the final FIPs without a revision of the Title V permit of any of the sources involved.

As a further example of flexibility under Title V, the Title V regulations allow the use of the minor permit modification procedures for permit modifications ''involving the use of economic incentives, marketable permits, emissions trading, and other

[84] Part 70 addresses requirements for state Title V programs, and Part 71 governs the federal Title V program.

similar approaches, to the extent that such minor permit modification procedures are explicitly provided for in an applicable implementation plan or in applicable requirements promulgated by EPA.'' 40 CFR 70.7(e)(2)(i)(B) and 40 CFR 71.7(e)(1)(i)(B). The final FIPs set forth in detail, and reference relevant provisions in Part 75 concerning, the approaches that are available for covered units to use for monitoring and reporting emissions (*i.e.,* approaches using a continuous emission monitoring system, an excepted monitoring system under appendices D and E to Part 75, a low mass emissions excepted monitoring methodology under § 75.19, or an alternative monitoring system under subpart E of Part 75). The final FIPs also require unit owners and operators to submit monitoring system certification applications (or, for alternative monitoring systems, petitions) to EPA establishing the monitoring and reporting approach actually to be used by the unit and allow owners and operators to submit petitions for alternatives to any specific monitoring and reporting requirement. These applications and petitions are subject to EPA review and approval to ensure consistency in monitoring and reporting among all trading program participants, and EPA's responses to any petitions for alternative monitoring systems or for alternatives to specific monitoring or reporting requirements are to be posted on EPA's Web site. Moreover, EPA intends that each covered unit's Title V permit will include a description of the general approach that the covered unit is required to use for monitoring and reporting emissions and that the description will reference the relevant sections of the Transport Rule trading program regulations and Part 75 and will state that the requirements may be modified through EPA approval of petitions for alternatives to specific requirements. Finally, consistent with §§ 70.7(e)(2)(i)(B) and 71.7(e)(1)(i)(B) of the Title V regulations, the final FIPs provide that a description of the general monitoring and reporting approach for a covered unit can be added to, or an existing description of a unit's general monitoring and reporting approach can be changed, in a Title V permit, using minor permit modification procedures, provided that the approach being described in the changed or new general description and the requirements applicable to that approach are already incorporated elsewhere in the permit. As a result, minor permit modification procedures can be used to revise a covered unit's Title V permit to be consistent with the monitoring and reporting approach, or any changes in the approach, allowed for the unit by EPA through the monitoring system certification or petition process under the Transport Rule trading programs.

As new applicable requirements under Title V, the requirements for covered units under the final FIPs will be incorporated into covered sources' existing Title V permits either pursuant to the provisions for reopening for cause (40 CFR 70.7(f) and 40 CFR 71.7(f)) or the permit renewal provisions (40 CFR 70.7(c) and 71.7(c)).[85] In contrast to the approach in CAIR of imposing permitting requirements and deadlines independent of those under Title V, the approach to permitting under the final FIPS of imposing no independent permitting requirements should reduce the burden on sources already required to be permitted under Title V and on permitting authorities. For sources newly subject to Title V that will also be covered sources under the final FIPs, the initial Title V permit issued pursuant to 40 CFR 70.7(a) will address the final FIP requirements.

In order to ensure that covered sources' Title V permit provisions concerning the final FIPs will reflect the Transport Rule trading program requirements and flexibilities properly and in a manner consistent from permit to permit, EPA intends to issue guidance to assist permitting authorities. This guidance would include information on permit issuance and permit modification requirements, as well as a permit content template that will identify the applicable requirements under the applicable Transport Rule trading program and thereby ensure that they will be correctly and comprehensively reflected in each permit in a manner that will reduce the burden on sources and permitting authorities related to the issuance of the permit and will reduce the need for permit revisions.

2. New Source Review

a. Background

EPA recognizes that, following the vacatur of the new source review (NSR) pollution control project exemption in *New York* v. *EPA, 413 F.3d 3, 40–41 (D.C. Cir. 2005),* pollution control projects, including pollution control projects constructed to comply with this rule, have the potential to trigger NSR permitting.

This issue was previously addressed in the context of CAIR. On December 20, 2005, the EPA agreed to reconsider one specific aspect of CAIR. In that notice, EPA granted reconsideration and sought comment on the potential impact of the opinion in *New York* v. *EPA,* which vacated the previously existing NSR exemption for certain environmentally beneficial pollution control projects. For this reconsideration, EPA conducted an analysis which showed that the court decision did not impact the CAIR analyses. Details of this analysis can be found in a technical support document which is available on EPA's Web site at: *http://epa.gov/cair/pdfs/0053-2263.pdf*

Because GHG emissions were not considered by EPA to be air pollutants within the meaning of the CAA at the time of CAIR, GHG emissions were not addressed in the 2005 analysis. GHG requirements related to the component of NSR concerning the Prevention of Significant Deterioration (''PSD'') program are addressed in EPA's ''Interpretation of Regulations that Determine Pollutants Covered by Clean Air Act Permitting Programs,'' 75 FR 17004 (April 2, 2010), and ''Prevention of Significant Deterioration and Title V Greenhouse Gas Tailoring Rule,'' 75 FR (June 3, 2010) (''Tailoring Rule''). Generally, as discussed in those actions, major stationary sources will be required to address GHG emissions as part of the PSD program if these sources emit GHG in amounts that equal or exceed the thresholds in the Tailoring Rule. Major sources that undergo a modification, including the addition of pollution control equipment, will trigger PSD requirements for their emissions of GHG if such emissions increase by at least 75,000[86] tons per year of CO_2 equivalent (CO_2e).

b. Proposed Rule

In the proposed rule, EPA presented the following conclusions:

(1) The 2005 analysis remains current and relevant for all pollutants except for GHG, and it shows that NSR requirements would not significantly impact the construction of controls that

[85] A permit is reopened for cause if any new applicable requirements (such as those under a FIP) become applicable to a covered source with a remaining permit term of 3 or more years. If the remaining permit term is less than 3 years, such new applicable requirements will be added to the permit during permit renewal. *See* 40 CFR 70.7(f)(1)(i) and 71.7(f)(1)(i).

[86] We note that, for sources that are modifying and are not subject to PSD for emissions of a non-GHG pollutant, in order to be subject to PSD for GHGs the source must not only have an emissions increase of 75,000 TPY CO_2e, but must also have a PTE of at least 100,000 TPY CO_2e and 100 TPY mass GHG. *See* 40 CFR 52.21(b)(49)(v)(b). However, since it is reasonable to assume that all sources that are potentially subject to the Transport Rule will have a PTE of at least 100,000 TPY CO_2e and 100 TPY, for the purposes of discussions in this section we will only note the requirement to have an emissions increase of 75,000 TPY CO_2e.

are installed to comply with the proposed Transport Rule.

(2) It is very unlikely that pollution control projects would cause GHG increases that would exceed the 75,000 tons per year threshold.

Consistent with these proposed conclusions, EPA also concluded that there would be no significant impacts from NSR for any pollution control projects resulting from the proposed rule such as low-NO_X burners, SO_2 scrubbers, or SCR. EPA requested comment on this issue.

c. Public Comments

EPA received a number of comments on the NSR issue, which can be divided into four types of comments: (1) Comments related to GHGs, (2) comments related to sulfuric acid mist, (3) comments related to CO emission increases from low-NO_X burners, and (4) suggested changes to the EPA rules.

Greenhouse Gases. A number of commenters recommended that EPA should document and substantiate its conclusion that greenhouse gases would be unlikely to trigger NSR requirements. Other commenters suggested that some units installing a FGD scrubber could exceed the 75,000 ton threshold for GHGs in the Tailoring Rule by emitting CO_2 produced from the chemical reaction of SO_2 with limestone. Commenters also suggested that NSR applicability for GHGs would also need to consider that an FGD would consume 1–3 percent of a scrubbed unit's generation, referred to as ''parasitic load,'' which (all else held equal) lowers that unit's net generation.[87] Commenters argued that any post-retrofit increase in generation to offset that ''parasitic load'' could lead to GHG increases potentially exceeding the 75,000 ton threshold.

Sulfuric Acid Mist. Two commenters noted that use of high sulfur fuels, in combination with SCR, can lead to increases in sulfuric acid mist, a pollutant regulated under NSR. One of these commenters noted that reagent injection was necessary to avoid triggering NSR for sulfuric acid mist when their SCR was installed.

Carbon Monoxide (CO). One commenter believed that EPA's 2005 analysis may not be adequate as it related to carbon monoxide emission increases that result from installation of low-NO_X burners. The commenter noted EPA's statement in the 2005 analysis that read as follows: ''Since the NO_X removal efficiencies used in EPA's analysis are not aggressive, it is believed that the units installing combustion controls can opt for moderate levels of overfire air flow rates and still achieve the NO_X reduction levels projected in EPA's analysis, without causing significant increases in the CO and unburned carbon emissions.'' The commenter suggested that the transport rule NO_X may be more aggressive than CAIR and thus EPA should conduct a review to determine whether EPA retains the same conclusion regarding CO emissions.

Recommended Rule Changes. Some commenters suggested changes to EPA rules to address their concerns that control equipment installed as a result of the Transport Rule could trigger NSR. Some commenters suggested that EPA craft an exclusion from NSR in the Transport Rule. One of these commenters suggested that EPA could do this by: (1) Providing special definition of baseline actual emissions; (2) a causation determination specifically tied to the Transport Rule; or (3) interpret the term ''stationary source'' in CAA 110(a)(4) in a way that doesn't impede Transport Rule compliance.

Other commenters expressed the concern that if NSR is triggered, the proposed Transport Rule did not allow enough time for compliance for sources needing to install control equipment. These commenters recommend that EPA should waive Transport Rule requirements or provide extra allowances until NSR review is complete.

d. Final Rule and Responses to Comments

Greenhouse Gases. EPA has carefully reviewed relevant data in assessing the comments suggesting that NSR permitting would likely be triggered for facilities installing FGD scrubbers to comply with this rule. EPA believes that sources installing FGD to comply with the Transport Rule can achieve those installations without triggering NSR.

EPA notes that its forecast of the number and extent of FGD scrubber installations substantially decreased since the time of proposal. For the proposed rule, EPA modeled 14 GW of FGD retrofit installations by 2014. For the final rule, EPA models a total of 5.7 GW of wet FGD installations from 7 units at 5 plants.

There are two factors associated with wet FGD scrubbers that commenters suggested individually or in combination could lead to increases above the 75,000 tons per year threshold in the Tailoring Rule. The first is the CO_2 chemically produced from the reaction of SO_2 with limestone in wet FGD scrubbers. The second is that owners or operators of the affected units may desire to increase coal usage after the retrofit is made to offset the ''parasitic load'' that is consumed on-site in order to operate the scrubber.

With respect to chemically produced CO_2, EPA concludes that only in very limited circumstances when installation of a scrubber is coupled with a change to considerably higher sulfur coal could installation of a wet limestone scrubber be associated with a more than 75,000 ton increase in CO_2 emissions. EPA finds this possibility unlikely to occur. For example, EPA's acid rain emissions reporting system shows that the plant with the greatest emissions from unscrubbed units in 2009 emitted about 103,000 tons of SO_2 from those units. If this plant installed a wet limestone scrubber assumed to reduce those SO_2 emissions by 96 percent, EPA calculates that chemically produced CO_2 could increase emissions by:

$$103{,}000 \times (0.96) \times (44/64) = 67{,}980 \text{ tons } CO_2.$$ [88]

Therefore, EPA finds that all currently uncontrolled units are technically capable of retrofitting with wet FGD without chemically produced CO_2 increases leading to a triggering of NSR. In limited circumstances, an owner or operator may elect to switch fuels to a significantly higher-sulfur coal subsequent to FGD installation and may risk an increase in chemically produced CO_2 emissions that would trigger NSR, but such a decision is not necessary in order to successfully install and operate the scrubber as a strategy for compliance with Transport Rule requirements.

With respect to the ''parasitic load'' issue, EPA estimates that today's wet FGD retrofit technology would consume typically about 1.7 percent of on-site generation.[89] If a facility made no other changes to its operation other than installing an FGD retrofit, that facility's CO_2 emissions from fuel combustion would remain constant. It is possible, however, that a source's owner or operator may elect to increase coal usage by some amount after retrofitting FGD, if for example the owner or operator desires to increase net generation after retrofitting. Under NSR, any such source would be able to

[87] ''Net generation'' refers to total generation minus the amount of power consumed on-site for various purposes, including operation of pollution control equipment.

[88] The factor 44/64 reflects the relative molecular weight of CO_2 and SO_2, respectively. A wet FGD's removal of one ton of SO_2 involves a chemical reaction that releases the equivalent molecular weight of CO_2 (thus equaling 44/64 of a ton of CO_2 emissions).

[89] Documentation Supplement for EPA Base Case v.4.10_FTransport—Updates for Final Transport Rule.

compare such a CO_2 emissions increase against the highest average annual emissions in any consecutive 24-month period from a 5-year historic baseline. Therefore, a unit retrofitting a scrubber under the Transport Rule may be able to increase its CO_2 emissions by more than 75,000 tons without triggering NSR if that increase would register as less than 75,000 tons against a higher emissions level in the aforementioned NSR baseline.

EPA also notes that scrubber installations provide facilities with the opportunity to make other capital improvements at the unit on which the scrubber is installed to improve the efficiency of boilers, steam turbines, motors, other auxiliary equipment, and plant control systems. Such improvements could allow a retrofitting unit to lower its CO_2 output rate such that a subsequent decision to increase net generation may not result in increased coal use, or may limit any CO_2 emission increase to less than the 75,000 tons per year threshold for triggering NSR.

As discussed in section VII.C, EPA notes that the Transport Rule does not mandate any specific control activity, including scrubber retrofitting, as a compliance strategy for units within a state to meet that state's SO_2 budget. As demonstrated by EPA's ''no FGD'' sensitivity analysis described in VII.C, covered sources within the Group 1 states are capable of meeting their emission reduction obligations through a variety of emission reduction strategies even if no unit is able to complete a scrubber installation by 2014. Therefore, EPA does not believe that NSR permitting presents an obstacle in any way to Transport Rule compliance, even if a given unit retrofitting with FGD triggers NSR for CO_2.

For some plants, EPA's IPM modeling forecasts installation and operation of dry sorbent injection (DSI) systems. EPA does not believe any of these systems would result in CO_2 emission increases above the 75,000 ton threshold. Moreover, given the relatively short construction schedule for DSI systems, EPA believes that if any of the plants did require NSR permitting, installation of DSI could still be accomplished by 2014.

In summary, EPA believes that the operators of plants projected to install scrubbers for Transport Rule SO_2 reductions could readily develop workable compliance strategies whether or not such an installation would trigger NSR. Plant owners could readily develop strategies to avoid emission increases that would trigger NSR, including but not limited to alternative SO_2 reduction strategies or technologies, efficiency improvements, or the ability to adjust net electricity generation to prevent a 75,000 ton increase in CO_2 emissions. EPA believes that projected scrubber installations under the Transport Rule are broadly unlikely to trigger NSR, but even in the limited conditions where such a triggering may occur, the NSR permitting process would not infringe on a state's ability to comply with its budgets under the Transport Rule. (*See* section VII.C for more details on EPA's analysis of a ''no FGD'' sensitivity supporting these points.)

Sulfuric Acid Mist. EPA continues to conclude that, consistent with the 2005 TSD, sulfuric acid mist increases due to compliance with this rule are very unlikely to trigger NSR permitting. Such increases are most commonly seen from installation of SCR units on facilities with relatively high sulfur coal. However, as acknowledged by one of the commenters, engineering solutions have been developed to prevent such increases, and EPA believes that facility owners would take this into account in designing such an SCR system. Moreover, EPA's IPM modeling of the NO_X budgets in the final rule suggests that no new SCR units will result from the final rule.

Carbon Monoxide. EPA concludes that any NSR permitting required due to CO increases associated with NO_X controls should not hinder the ability of sources to comply with Transport Rule requirements. For states that were included in the CAIR for either ozone, $PM_{2.5}$, or both, EPA finds no evidence to suggest that the NO_X control requirements of the Transport Rule would require more aggressive controls triggering NSR. As EPA's baseline analysis acknowledges, many sources in these states installed NO_X controls to comply with CAIR. In addition, their historic emissions reflect operation of these controls and there is no evidence to suggest that the Transport Rule will require sources to operate these controls more aggressively, thereby increasing CO emissions above the relevant threshold and triggering NSR. In a few states that were not covered by CAIR, a limited number of facilities may install new combustion controls (such as low-NO_X burners, overfire air, or other combustion controls or upgrades) as a result of the Transport Rule. EPA expects relatively few such installations, and believes that NSR permitting, if required, is not an obstacle to compliance with the rule. First, EPA believes that NSR permitting should be relatively straightforward for these installations and that the BACT determination for CO will be very straightforward. EPA expects a relatively short time period for permitting, and as discussed later, EPA is planning to initiate actions that will further expedite any required permitting.

Second, EPA notes that the rule achieves reductions through a trading program rather than direct control requirements. Accordingly, even if a few installations do not have controls in place at the very beginning of the compliance period, this should not hinder the ability of states to meet their ozone-season NO_X budgets. Covered sources have a suite of NO_X pollution control strategies and technologies available to them, including coal selection, selective non-catalytic reduction, gas re-burn, low-NO_X burner and overfire air installations or upgrades, and neural network optimization of combustion controls operation. Sources may consider all of these technologies and strategies, which can be designed and operated so as to minimize CO emission increases that may otherwise trigger NSR. EPA also notes that during the downtime for installation of the construction controls, there would be no NO_X emissions, and thus the source's allowance holding requirements would also be lower for that period.

Recommended Rule Changes. EPA disagrees with commenters who suggested rule changes, either to the NSR program or to this rule, to account for installations triggering NSR. As noted above, EPA concludes that NSR would be triggered at most for just a few of the projected control installations. EPA believes, however, that even if required these NSR permits would likely be issued in a timely manner given the overall environmental benefits resulting from the control equipment installation. In addition, this rule's requirements are based on a flexible trading approach rather than a direct control approach. Accordingly, if this affect occurs for only a few installations, EPA believes that any extra emissions that occur during the relatively short time needed to obtain an NSR permit could be accommodated within the overall trading system.

Expediting Permitting. In the limited circumstances where pollution control installations under the Transport Rule may trigger NSR, we also note that an expedited permitting process can occur with sufficient time to obtain permits and achieve emission reductions under the Transport Rule programs. For this reason, we strongly encourage permitting authorities to expedite

permitting for any such projects, which are likely to be very limited in number. To ensure that the permitting decisions are expedited, separate from this rulemaking EPA will provide assistance and guidance in order to expedite issuance of any such permits. For example, we are considering assistance that would serve to expedite BACT reviews or required air quality analysis. EPA requests early notification of any specific cases where such guidance and assistance may be needed.

J. How the Program Structure Is Consistent With Judicial Opinions Interpreting the Clean Air Act

The air quality-assured trading programs established by this rule eliminate all of the emissions that EPA has identified as significantly contributing to downwind nonattainment or interference with maintenance [90] in a manner that is consistent with section 110(a)(2)(D)(i) of the CAA as interpreted by the DC Circuit in *North Carolina,* 531 F.3d 896. The FIPs finalized in this action require sources to participate in air quality-assured interstate emission trading programs that include provisions to ensure that no state's emissions exceed that state's budget with variability limit. These assurance provisions, combined with the requirement that all sources hold emission allowances sufficient to cover their emissions, effectuate the requirement that emission reductions occur within the state. *See* 42 U.S.C. 7410(a)(1)(2)(D).

The state budgets developed in this rule represent an estimate of the emissions that will remain in a given state after the elimination of all emissions in that state that EPA has determined must be prohibited pursuant to section 110(a)(2)(D)(i)(I). However, for the reasons explained above, the amount of emissions that remain after the requirements of 110(a)(2)(D)(i)(I) are satisfied may vary. EPA recognizes that shifts in generation due to, among other things, changing weather patterns, demand growth, or disruptions in electricity supply from other units can affect the amount of generation needed in a specific state and thus baseline EGU emissions from that state. Because a state's significant contribution to nonattainment or interference with maintenance is defined by EPA as all emissions that can be eliminated for a specific cost (as explained above, using air quality considerations to identify this cost threshold), and because EGU baseline emissions are variable, the amount of emissions remaining in a state after all significant contribution or interference with maintenance is eliminated is also variable. In other words, EGU emissions in a state whose sources have installed all controls and taken all measures necessary to eliminate its significant contribution to nonattainment or interference with maintenance could exceed the state budget without variability.

For this reason, EPA determined that it is appropriate for the program to recognize the inherent variability in state EGU emissions. The program does so by identifying a variability range for each state in the program. The assurance provisions in the program, in turn, limit a state's emissions to the state's budget with variability limit.

In addition, the requirement that all sources hold emission allowances sufficient to cover their emissions (and the fact that the total number of emission allowances allocated will be equal to the sum of all state budgets without variability) ensures that the use of variability limits both takes into account the inherent variability of baseline EGU emissions in individual states (*i.e.,* the variability of total state EGU emissions before the elimination of significant contribution or interference with maintenance) and recognizes that this variability is not as great in a larger region. The variability of emissions across a larger region is not as large as the variability of emissions in a single state for several reasons. Increased EGU emissions in one state in one control period often are offset by reduced EGU emissions in another state within the control region in the same control period. In a larger region that includes multiple states, factors that affect electricity generation, and thus EGU emission levels, are more likely to vary significantly within the region so that resulting emission changes in different parts of the region are more likely to offset each other. For example, a broad region can encompass states with differing weather patterns, with the result that increased electricity demand and emissions due to weather in one state may be offset by decreased demand and emissions due to weather in another state. By further example, a broad region can encompass states with differing types of industrial and commercial electricity end-users, with the result that changes in electricity demand and emissions among the states due to the effect of economic changes on industrial and commercial companies may be offsetting. Similarly, because states in a broad region may vary in their degree of dependence on fossil-fuel-based electric generation, the impact of an outage of non-fossil-fuel-based generation (*e.g.,* a nuclear plant) in one state may have a very different impact in that state than on other states in the region. Thus, EPA does not believe it is necessary to allow total regional allowance allocations for the states covered by a given trading program to exceed the sum of all state budgets without variability for these states.

For these reasons, the fact that the use of state budgets with variability limits may allow limited shifting of emissions between states is not inconsistent with the court's holding that emission reductions must occur ''within the state.'' *North Carolina,* 531 F.3d at 907. Under the FIPs, no state may emit more than its budget with variability limit and total emissions cannot exceed the sum of all state budgets without variability. This approach takes into account the inherent variability of the baseline emissions without excusing any state from eliminating its significant contribution to nonattainment or interference with maintenance. It is thus consistent with the statutory mandate of section 110(a)(2)(D)(i)(I) as interpreted by the Court.

Most commenters voiced support for a remedy option that allows some degree of interstate trading. However, one commenter argued that the structure of the preferred trading remedy that EPA proposed is legally problematic. The program, the commenter argues, provides no legal assurance that the variability margins will be used by market participants to account for variability. The commenter does not suggest a solution, but instead says, if a solution cannot be found, EPA should not allow any amount of interstate trading.

EPA disagrees with the commenter that the structure of the preferred interstate trading program is legally problematic. In *North Carolina,* the Court held that the CAIR interstate trading programs were inconsistent with section 110(a)(2)(D)(i)(I), concluding that ''EPA's apportionment decisions have nothing to do with each state's 'significant contribution' '' (531 F.3d at

[90] As explained in greater detail in Section VI of this notice, for each covered state, EPA has identified emissions that must be prohibited pursuant to section 110(a)(2)(D)(i)(I). In most instances, EPA has determined that elimination of such emissions is sufficient to satisfy the requirements of that section. Thus, in these instances, the budgets represent an estimate of the emissions that will remain after the elimination of all emissions in that state that significantly contribute to nonattainment or interfere with maintenance of the NAAQS in another state. In a few limited instances, however, EPA determined that elimination of the emissions is necessary but may not be sufficient to satisfy the requirements of that section. In these instances, the budgets represent an estimate of the emissions that will remain after the elimination of all emissions that EPA, at this time, has determined must be eliminated.

907) and that ''EPA is not exercising its section 110(a)(2)(D)(i)(I) duty unless it is promulgating a rule that achieves something measurable toward the goal of prohibiting sources 'within the State' from contributing to nonattainment or interfering with maintenance 'in any other State.' '' (531 F.3d at 908). It emphasized that ''[t]he trading program is unlawful, because it does not connect states' emission reductions to any measure of their own significant contributions. To the contrary, it relates their SO_2 reductions to their Title IV allowances. * * * The allocation of NO_X caps is similarly arbitrary because EPA distributed allowances simply in the interest of fairness.'' 531 F.3d at 930. As explained in this rule, EPA has addressed these concerns by using source specific analysis to identify each individual state's significant contribution to nonattainment and interference with maintenance, and including assurance provisions to ensure that the necessary reductions occur in each state. The Court did not go further to prohibit all interstate trading. In fact, it notes that ''after rebuilding, a somewhat similar CAIR may emerge'' (531 F.3d at 930). For all of these reasons, EPA does not believe the opinion in *North Carolina* can be read to stand for the proposition that no interstate trading can be allowed unless the specific reasons behind market participants' decisions to purchase allowances can be ascertained. Because allowance purchase decisions are likely to be based on multiple factors, which can include the desire to hedge against potential emission variability as well as to address actually occurring variability, requiring ascertainment of the specific reasons for allowance purchases would be tantamount to prohibiting all interstate trading.

Moreover, as discussed above, variability is inherent to the operation of the electric generation system and thus to emissions from this sector. In fact, variability in emissions occurs every year in every state and, like variability of year-to-year weather conditions (which is a major cause of emission variability), cannot be accurately predicted. *See* the Power Sector Variability Final Rule TSD in the docket for this rulemaking. EPA maintains that its approach of allowing state EGU emissions each year to vary by up to the historically representative, annual amount of inherent, emission variability reasonably reflects the realities of the electric generation system and is consistent with the *North Carolina* decision. In summary, the variability limits take into account inherent variability over time of emissions in each state from this sector while also ensuring that each state makes necessary emission reductions to eliminate significant contribution and interference with maintenance. EPA thus concludes that the commenter's argument that the use of variability limits allows sources ''within the state'' to avoid eliminating their significant contribution or interference with maintenance is without merit.

VIII. Economic Impacts of the Transport Rule

A. Emission Reductions

The projected impacts of this final rule as presented throughout the preamble do not reflect minor technical corrections to SO_2 budgets in three states (KY, MI, and NY) made after the impact analyses were conducted. These projections also assumed preliminary variability limits that were smaller than the variability limits finalized in this rule. EPA conducted sensitivity analysis confirming that these differences do not meaningfully alter any of the Agency's findings or conclusions based on the projected cost, benefit, and air quality impacts presented for the final Transport Rule. The results of this sensitivity analysis are presented in Appendix F in the final Transport Rule RIA.

Table VIII.A–1 presents projected power sector emissions in the base case (*i.e.,* without the Transport Rule or CAIR) compared to projected emissions with the Transport Rule in 2012 and 2014 for all covered states. Table VIII.A–2 presents 2005 historical power sector emissions compared to projected emissions with the Transport Rule in 2012 and 2014. Note that for ozone-season emissions, these tables present results from a modeling scenario that reflects ozone-season NO_X requirements in 26 states. This modeling differs from the final Transport Rule because it includes ozone-season NO_X requirements for six states (Iowa, Kansas, Michigan, Missouri, Oklahoma, and Wisconsin) that the final Transport Rule does not cover (as discussed previously, EPA is issuing a supplemental proposal to request comment on inclusion of these six states).

TABLE VIII.A–1—PROJECTED SO_2 AND NO_X ELECTRIC GENERATING UNIT EMISSION REDUCTIONS IN COVERED STATES WITH THE TRANSPORT RULE COMPARED TO BASE CASE WITHOUT TRANSPORT RULE OR CAIR

[Million tons]

	2012 Base case emissions	2012 Transport rule emissions	2012 Emission reductions	2014 Base case emissions	2014 Transport rule emissions	2014 Emission reductions
SO_2	7.0	3.0	4.0	6.2	2.4	3.9
Annual NO_X	1.4	1.3	0.1	1.4	1.2	0.2
Ozone-Season NO_X	0.7	0.6	0.1	0.7	0.6	0.1

Notes: The SO_2 and annual NO_X emissions in this table reflect EGUs in the 23 states covered by this rule for purposes of the 24-hour and/or annual $PM_{2.5}$ NAAQS (Alabama, Georgia, Illinois, Indiana, Iowa, Kansas, Kentucky, Maryland, Michigan, Minnesota, Missouri, Nebraska, New Jersey, New York, North Carolina, Ohio, Pennsylvania, South Carolina, Tennessee, Texas, Virginia, West Virginia, and Wisconsin).

The ozone-season NO_X emissions reflect EGUs in the 20 states covered by this rule for purposes of the ozone NAAQS (Alabama, Arkansas, Florida, Georgia, Illinois, Indiana, Kentucky, Louisiana, Maryland, Mississippi, New Jersey, New York, North Carolina, Ohio, Pennsylvania, South Carolina, Tennessee, Texas, Virginia, and West Virginia) and the six states that would be covered for the ozone NAAQS if EPA finalizes its supplemental proposal (Iowa, Kansas, Michigan, Missouri, Oklahoma, and Wisconsin).

Tables VIII.A–3 through VIII.A–5 present projected state-level emissions with and without the Transport Rule in 2012 and 2014 from fossil-fuel-fired EGUs greater than 25 MW in covered states.

TABLE VIII.A–2—PROJECTED SO_2 AND NO_X ELECTRIC GENERATING UNIT EMISSION REDUCTIONS IN COVERED STATES WITH THE TRANSPORT RULE COMPARED TO 2005 ACTUAL EMISSIONS

[Million tons]

	2005 Actual emissions	2012 Transport rule emissions	2012 Emission reductions from 2005	2014 Transport rule emissions	2014 Emission reductions from 2005
SO_2	8.8	3.0	5.8	2.4	6.4
Annual NO_X	2.6	1.3	1.3	1.2	1.4
Ozone-Season NO_X	0.9	0.6	0.3	0.6	0.3

Notes: The SO_2 and annual NO_X emissions in this table reflect EGUs in the 23 states covered by this rule for purposes of the 24-hour and/or annual $PM_{2.5}$ NAAQS (Alabama, Georgia, Illinois, Indiana, Iowa, Kansas, Kentucky, Maryland, Michigan, Minnesota, Missouri, Nebraska, New Jersey, New York, North Carolina, Ohio, Pennsylvania, South Carolina, Tennessee, Texas, Virginia, West Virginia, and Wisconsin).

The ozone-season NO_X emissions reflect EGUs in the 20 states covered by this rule for purposes of the ozone NAAQS (Alabama, Arkansas, Florida, Georgia, Illinois, Indiana, Kentucky, Louisiana, Maryland, Mississippi, New Jersey, New York, North Carolina, Ohio, Pennsylvania, South Carolina, Tennessee, Texas, Virginia, and West Virginia) and the six states that would be covered for the ozone NAAQS if EPA finalizes its supplemental proposal (Iowa, Kansas, Michigan, Missouri, Oklahoma, and Wisconsin).

Table VIII.A-3 – Projected State-level Annual SO_2 Emissions from Fossil-Fired Electric Generating Units Greater than 25 MW in Covered States in 2012 and 2014 in Base Case and with Transport Rule (tons)

	Base Case		Transport Rule	
	2012	2014	2012	2014
Alabama	455,503	417,009	219,067	173,231
Georgia	405,933	169,702	158,581	92,605
Illinois	485,417	137,522	209,701	128,143
Indiana	776,359	711,265	241,258	177,222
Iowa	121,663	127,354	75,003	77,931
Kansas	68,490	69,767	41,433	45,681
Kentucky	520,531	487,990	146,133	116,912
Maryland	49,942	42,926	26,630	30,368
Michigan	252,411	265,611	190,274	158,394
Minnesota	64,524	66,268	42,862	45,143
Missouri	375,771	381,939	181,662	177,359
Nebraska	70,754	71,821	65,079	70,087
New Jersey	26,346	38,857	5,518	6,243
New York	51,243	40,416	20,378	12,689
North Carolina	144,554	120,441	117,383	63,382
Ohio	871,401	831,648	230,216	150,784
Pennsylvania	493,206	507,360	250,484	123,224
South Carolina	184,045	209,538	84,435	96,589
Tennessee	324,372	284,463	96,520	64,716
Texas	445,715	452,978	244,239	266,288
Virginia	80,889	64,917	66,640	38,562
West Virginia	535,586	497,398	119,174	83,235
Wisconsin	131,199	124,862	77,505	44,139
Total	6,935,853	6,122,051	2,910,173	2,242,927

Table VIII.A-4 – Projected State-level Annual NO_X Emissions from Fossil-Fired Electric Generating Units Greater than 25 MW in Covered States in 2012 and 2014 in Base Case and with Transport Rule (tons)

	Base Case		Transport Rule	
	2012	2014	2012	2014
Alabama	82,005	74,937	73,600	68,119
Georgia	66,384	47,808	61,464	39,817
Illinois	51,969	54,661	47,635	48,533
Indiana	119,625	116,552	109,773	109,392
Iowa	42,563	44,614	36,953	38,302
Kansas	37,106	32,390	30,603	23,938
Kentucky	88,136	83,481	83,856	76,026
Maryland	16,602	17,444	15,665	17,061
Michigan	60,594	64,345	59,405	57,311
Minnesota	36,833	37,952	30,524	30,849
Missouri	53,199	54,528	51,329	48,888
Nebraska	42,985	43,410	26,488	26,552
New Jersey	7,391	7,858	7,355	7,562
New York	17,556	18,505	17,616	17,250
North Carolina	51,902	46,130	47,679	41,676
Ohio	100,420	99,389	84,679	84,126
Pennsylvania	129,125	132,299	117,612	116,994
South Carolina	34,635	37,862	33,144	35,591
Tennessee	37,674	29,256	32,984	20,490
Texas	136,124	140,788	133,406	136,638
Virginia	34,567	35,798	33,244	34,891
West Virginia	61,792	64,182	55,808	53,335
Wisconsin	36,701	36,904	30,643	29,688
Total	1,345,888	1,321,092	1,221,466	1,163,027

Table VIII.A-5 – Projected State-level Ozone-Season NO_X Emissions from Fossil-Fired Electric Generating Units Greater than 25 MW in Covered States in 2012 and 2014 in Base Case and with Transport Rule (tons)

	Base Case		Transport Rule	
	2012	2014	2012	2014
Alabama	34,074	31,365	31,607	29,532
Arkansas	15,037	16,644	15,087	16,728
Florida	41,646	45,993	27,645	29,435
Georgia	29,106	19,293	26,660	17,838
Illinois	21,371	22,043	21,102	21,210
Indiana	46,877	46,086	46,789	46,564
Iowa	18,307	19,440	15,746	16,346
Kansas	16,126	13,967	13,425	10,217
Kentucky	37,588	35,296	34,969	31,547
Louisiana	13,433	13,924	13,669	13,943
Maryland	7,179	7,540	6,705	7,248
Michigan	25,989	28,037	25,476	24,248
Mississippi	10,161	11,212	10,639	10,960
Missouri	23,156	23,759	21,788	20,805
New Jersey	3,440	3,668	3,403	3,518
New York	8,336	9,031	8,404	8,399
North Carolina	22,902	20,169	21,081	18,154
Ohio	42,274	41,327	34,576	35,769
Oklahoma	31,415	31,723	20,910	21,200
Pennsylvania	52,895	54,217	50,384	50,446
South Carolina	15,145	16,586	13,810	15,058
Tennessee	15,505	12,141	14,305	8,461
Texas	64,711	65,492	62,824	63,749
Virginia	15,148	15,339	14,311	14,744
West Virginia	26,464	27,099	23,352	22,406
Wisconsin	15,876	16,048	12,840	12,768
Total	654,161	647,439	591,508	571,293

BILLING CODE 6560–50–C

B. The Impacts on $PM_{2.5}$ and Ozone of the Final SO_2 and NO_X Strategy

The air quality modeling platform described in section V was used by EPA to model the impacts of the final rule SO_2 and NO_X emission reductions on annual average $PM_{2.5}$, 24-hour $PM_{2.5}$, and 8-hour ozone concentrations. In brief, we ran the CAMx model for the meteorological conditions in the year of 2005 for the eastern U.S. modeling domain.[91] Modeling was performed for the 2014 base case and the 2014 air quality-assured trading (*i.e.,* remedy) scenario to assess the expected effects of the final rule on projected $PM_{2.5}$ and ozone design value concentrations and nonattainment and maintenance. The procedures used to project future design values and nonattainment and maintenance are described in section V.

The projected 2014 concentrations of annual $PM_{2.5}$, 24-hour $PM_{2.5}$, and ozone at each monitoring site in the East for which projections were made are provided in the Air Quality Modeling Final Rule TSD. The number of nonattainment and/or maintenance sites in the East for the 2012 base case, 2014 base case, and 2014 remedy for annual $PM_{2.5}$, 24-hour $PM_{2.5}$, and ozone are provided in Table VIII.B–1.[92] The average and peak reductions in annual $PM_{2.5}$, 24-hour $PM_{2.5}$, and ozone predicted at 2012 nonattainment and/or maintenance sites due the emission reductions between 2012 and the 2014 remedy are provided in Table VIII.B–2.

[91] As described in the Air Quality Modeling Final Rule TSD, the eastern U.S. was modeled at a horizontal resolution of 12 x 12 km. The remainder of the U.S. was modeled at a resolution of 36 x 36 km.

[92] To provide a point of reference, Table VIII.B–1 also includes the number of nonattainment and/maintenance sites based on ambient design values for the period 2003 through 2007.

TABLE VIII.B–1—PROJECTED REDUCTION IN NONATTAINMENT AND/OR MAINTENANCE PROBLEMS FOR $PM_{2.5}$ AND OZONE IN THE EASTERN U.S.

	Ambient (2003–2007)	2012 Base case	2014 Base case	2014 remedy	Percent reduction: 2012 base case vs. 2014 remedy (percent)	Percent reduction: 2014 base case vs. 2014 remedy
Annual $PM_{2.5}$ Nonattainment Sites [93]	103	12	7	0	100	100 percent.
Annual $PM_{2.5}$ Maintenance-Only Sites	22	4	3	0	100	100 percent.
24-hour $PM_{2.5}$ Nonattainment Sites	151	20	10	1	95	90 percent.
24-hour $PM_{2.5}$ Maintenance-Only Sites	48	21	12	4	81	67 percent.
Ozone Nonattainment Sites	104	7	4	4	43	No Change.
Ozone Maintenance-Only Sites	65	9	6	6	33	No Change.

TABLE VIII.B–2—AVERAGE AND PEAK REDUCTION IN ANNUAL $PM_{2.5}$, 24-HOUR $PM_{2.5}$, AND OZONE FOR SITES THAT ARE PROJECTED TO HAVE NONATTAINMENT AND/OR MAINTENANCE PROBLEMS IN THE 2012 BASE CASE

	Average reduction: 2012 base Case to 2014 remedy	Peak reduction: 2012 base case to 2014 remedy
Annual $PM_{2.5}$ Nonattainment Sites	2.73 μg/m³	3.32 μg/m³.
Annual $PM_{2.5}$ Maintenance-Only Sites	2.99 μg/m³	3.26 μg/m³.
24-hour $PM_{2.5}$ Nonattainment Sites	6.8 μg/m³	11.7 μg/m³.
24-hour $PM_{2.5}$ Maintenance-Only Sites	6.5 μg/m³	11.0 μg/m³.
Ozone Nonattainment Sites	1.9 ppb	2.3 ppb.
Ozone Maintenance-Only Sites	1.8 ppb	2.1 ppb.

The information in Table VIII.B–1 shows that there will be significant reductions in the extent of nonattainment and maintenance problems for annual $PM_{2.5}$, 24-hour $PM_{2.5}$, and ozone between 2012 and 2014 as a result of the emission budgets in this rule coupled with emission reductions during this time period from other existing control programs. Specifically, the results of the air quality modeling indicate that no sites are projected to be in nonattainment or projected to have a maintenance problem for annual $PM_{2.5}$ in 2014 with the emission reductions expected from the Transport Rule. As indicated in Table VIII.B–2, the average reduction in annual $PM_{2.5}$ across the twelve 2012 nonattainment sites is 2.73 μg/m³ and the peak reduction at an individual nonattainment site is 3.32 μg/m³. Large reductions are also projected at annual $PM_{2.5}$ maintenance-only sites.

For 24-hour $PM_{2.5}$, we project that the number of nonattainment sites will be reduced by 95 percent and the number of maintenance-only sites by 81 percent in 2014 compared to the 2012 base case. The average reduction in 24-hour $PM_{2.5}$ across the twenty 2012 nonattainment sites is 6.8 μg/m³ and the peak reduction at an individual nonattainment site is 11.7 μg/m³. Similarly large reductions are projected at 24-hour $PM_{2.5}$ maintenance-only sites, as indicated in Table VIII.B–2.

The emission reductions in the Transport Rule will result in considerable progress toward attainment and maintenance at the 5 sites that remain as nonattainment and/or maintenance for the 24-hour $PM_{2.5}$ standard. On average for these 5 sites, the predicted amount of $PM_{2.5}$ reduction in 2014 is 64 percent of what is needed for these sites to attain and/or maintain the 24-hour standard.

Thus, the SO_2 and NO_X emission reductions which will result from the Transport Rule will greatly reduce the extent of $PM_{2.5}$ nonattainment and maintenance problems by 2014 and beyond. As described previously, these emission reductions are expected to substantially reduce the number of $PM_{2.5}$ nonattainment and/or maintenance sites in the East and make attainment easier for those counties that remain nonattainment by substantially lowering $PM_{2.5}$ concentrations in residual nonattainment sites. The emission reductions will also help those locations that may have maintenance problems.

Based on the 2012 base air quality modeling for ozone, 16 sites in the East are projected to be nonattainment or have problems maintaining the 1997 ozone standard. The summer NO_X reductions are projected to lower 8-hour ozone concentration by 1.8 ppb, on average by 2014, at monitoring sites projected to be nonattainment and/or have maintenance problems in the 2012 base case. We expect that the number of nonattainment sites will be reduced by 43 percent and the number of maintenance-only sites by 33 percent in 2014 compared to the 2012 base case. Thus, our modeling indicates that by 2014 the summer NO_X emission reductions in this rule, coupled with other existing control programs, will lower ozone concentrations in the East and help bring areas closer to attainment for the 8-hour ozone NAAQS. As discussed in section III of this preamble, EPA plans to finalize its reconsideration of the 2008 revised ozone NAAQS soon, and these reductions will help areas achieve those revised NAAQS.

C. Benefits

1. Human Health Benefit Analysis

To estimate the human health benefits of the final Transport Rule, EPA used the BenMAP model to quantify the changes in $PM_{2.5}$ and ozone-related health impacts and monetized benefits based on changes in air quality. For context, it is important to note that the magnitude of the $PM_{2.5}$ benefits is largely driven by the concentration response function for premature mortality. Experts have advised EPA to consider a variety of assumptions, including estimates based both on empirical (epidemiological) studies and judgments elicited from scientific experts, to characterize the uncertainty in the relationship between $PM_{2.5}$

[93] "Nonattainment" is used to denote sites that are projected to have both nonattainment and maintenance problems.

concentrations and premature mortality. For this rule we cite two key empirical studies, one based on the American Cancer Society cohort study [94] and the other based on the extended Six Cities cohort study.[95]

The estimated benefits of this rule are substantial, particularly when viewed within the context of the total public health burden of $PM_{2.5}$ and ozone air pollution. A recent EPA analysis estimated that 2005 levels of $PM_{2.5}$ and ozone were responsible for between 130,000 and 320,000 $PM_{2.5}$-related and 4,700 ozone-related premature deaths, or about 6.1 percent of total deaths from all causes in the continental U.S. (using the lower end of the range for premature deaths).[96] In other words, 1 in 20 deaths in the U.S. is attributable to $PM_{2.5}$ and ozone exposure. This same analysis attributed almost 200,000 non-fatal heart attacks, 90,000 hospital admissions due to respiratory or cardiovascular illness, 2.5 million cases of aggravated asthma among children, and many other human health impacts to exposure to these two air pollutants.

We estimate that $PM_{2.5}$ improvements under the Transport Rule will, starting in 2014, annually reduce between 13,000 and 34,000 $PM_{2.5}$-related premature deaths, 15,000 non-fatal heart attacks, 8,700 incidences of chronic bronchitis, 8,500 hospital admissions, and 400,000 cases of aggravated asthma while also reducing 10 million days of restricted activity due to respiratory illness and approximately 1.7 million work-loss days. We also estimate substantial health improvements for children from fewer cases of upper and lower respiratory illness and acute bronchitis.

Ozone health-related benefits are expected to occur during the summer ozone season (usually ranging from May to September in the eastern U.S.). Based upon modeling for 2014, annual ozone related health benefits are expected to include between 27 and 120 fewer premature mortalities, 240 fewer hospital admissions for respiratory illnesses, 86 fewer emergency room admissions for asthma, 160,000 fewer days with restricted activity levels, and 51,000 fewer days where children are absent from school due to illnesses.

Table VIII.C–1 presents the primary estimates of annual reduced incidence of $PM_{2.5}$ and ozone-related health effects for the final rule based on 2014 air quality improvements. When adding the PM and ozone-related mortalities together, we find that the Transport Rule will yield between 13,000 and 34,000 fewer premature mortalities annually. By 2014, in combination with other federal and state air quality actions, the Transport Rule will address a substantial fraction of the total public health burden of $PM_{2.5}$ and ozone air pollution.

BILLING CODE 6560–50–P

[94] Pope *et al.,* 2002. ''Lung Cancer, Cardiopulmonary Mortality, and Long-term Exposure to Fine Particulate Air Pollution.'' Journal of the American Medical Association. 287:1132–1141.

[95] Laden *et al.,* 2006. ''Reduction in Fine Particulate Air Pollution and Mortality.'' American Journal of Respiratory and Critical Care Medicine. 173:667–672.

[96] Fann N, Lamson A, Wesson K, Risley D, Anenberg SC, Hubbell BJ. Estimating the National Public Health Burden Associated with Exposure to Ambient $PM_{2.5}$ and Ozone. Risk Analysis; 2011 In Press.

VIII.C-1 Estimated Annual Reductions in Incidences of Health Effects Based on 2014 Modeling[a]

Health Effect	*Within transport region*	*Beyond transport region*	*Total*
PM-Related endpoints			
Premature Mortality			
Pope et al. (2002) (age >30)	13,000 (5,200—21,000)	33 (5—60)	13,000 (5,200—21,000)
Laden et al. (2006) (age >25)	34,000 (18,000—49,000)	84 (31—140)	34,000 (18,000—49,000)
Infant (< 1 year)	59 (-47—160)	0.15 (-0.2—0.5)	59 (-47—160)
Chronic Bronchitis	8,700 (1,600—16,000)	23 (-5—50)	8,700 (1,600—16,000)
Non-fatal heart attacks (age > 18)	15,000 (5,600—24,000)	40 (7—72)	15,000 (5,600—24,000)
Hospital admissions—respiratory (all ages)	2,700 (1,300—4,000)	5 (2—9)	2,700 (1,300—4,000)
Hospital admissions—cardiovascular (age > 18)	5,700 (4,200—6,600)	15 (10—19)	5,800 (4,200—6,600)
Emergency room visits for asthma (age < 18)	9,800 (5,800—14,000)	21 (7—36)	9,800 (5,800—14,000)
Acute bronchitis (age 8-12)	19,000 (-630—37,000)	50 (-29—130)	19,000 (-660—37,000)
Lower respiratory symptoms (age 7-14)	240,000 (120,000—360,000)	630 (130—1,100)	240,000 (120,000—360,000)
Upper respiratory symptoms (asthmatics age 9-18)	180,000 (57,000—310,000)	480 (-25—980)	180,000 (57,000—310,000)
Asthma exacerbation (asthmatics 6-18)	400,000 (45,000—1,100,000)	1,100 (-250—2,900)	400,000 (45,000—1,100,000)
Lost work days (ages 18-65)	1,700,000 (1,500,000—1,900,000)	4,300 (3,500—5,200)	1,700,000 (1,500,000—1,900,000)
Minor restricted-activity days (ages 18-65)	10,000,000 (8,400,000—11,000,000)	26,000 (20,000—32,000)	10,000,000 (8,400,000—12,000,000)

Ozone-related endpoints				
Premature mortality				
Multi-city and NMMAPS	Bell et al. (2004) (all ages)	27 (11–42)	0.1 (0.01–0.3)	27 (11–42)
	Schwartz et al. (2005) (all ages)	41 (17–64)	0.2 (0.1–0.4)	41 (17–65)
	Huang et al. (2005) (all ages)	37 (17–57)	0.2 (0.1–0.4)	37 (17–57)
Meta-analyses	Ito et al. (2005) (all ages)	120 (78–160)	0.6 (0.3–0.9)	120 (79–160)
	Bell et al. (2005) (all ages)	87 (48–130)	0.5 (0.2–0.8)	87 (48–130)
	Levy et al. (2005) (all ages)	120 (89–150)	0.7 (0.4–0.9)	120 (90–160)
Hospital admissions—respiratory causes (ages > 65)		160 (21–280)	1.2 (0.1–2.3)	160 (21–290)
Hospital admissions—respiratory causes (ages <2)		83 (43–120)	0.5 (0.2–0.8)	84 (43–120)
Emergency room visits for asthma (all ages)		86 (-2–260)	0.4 (-0.2–1.4)	86 (-2–260)
Minor restricted-activity days (ages 18-65)		160,000 (80,000–240,000)	910 (240–1,600)	160,000 (80,000–240,000)
School absence days		51,000 (22,000–73,000)	290 (59–490)	51,000 (22,000–74,000)

[a] Values rounded to two significant figures. Benefits from reducing other criteria pollutants and hazardous air pollutants and ecosystem effects are not included here.
Source: EPA, 2011

2. Quantified and Monetized Visibility Benefits

Only a subset of the expected visibility benefits—those for Class I areas—are included in the monetary benefit estimates we project for this rule. We anticipate improvement in visibility in residential areas where people live, work, and recreate within the Transport Rule region for which we are currently unable to monetize benefits. For the Class I areas we estimate annual benefits of $4.1 billion beginning in 2014 for visibility improvements. The value of visibility benefits in areas where we are unable to monetize benefits could be substantial.

3. Benefits of Reducing GHG Emissions

When fully implemented in 2014, the Transport Rule will reduce emissions of CO_2 from electrical generating units by about 25 million metric tons annually. Using a ''social cost of carbon'' (SCC) estimate that accounts for the marginal dollar value (*i.e.,* cost) of climate-related damages resulting from CO_2 emissions, previous analyses, including the RIA for the Final Rulemaking to Establish Light-Duty Vehicle Greenhouse Gas Emissions Standards and Corporate Average Fuel Efficiency Standards, have found the total benefit of CO_2 reductions is substantial. The monetary value of these avoided damages also grows over time. Readers interested in learning more about the calculation of the SCC metric should refer to the SCC TSD, Social Cost of Carbon for Regulatory Impact Analysis Under Executive Order 12866 [Docket No. EPA–HQ–OAR–2009–0472].

4. Total Monetized Benefits

Table VIII.C–2 presents the estimated annual monetary value of reductions in the incidence of health and welfare effects. These estimates account for increases in the value of risk reduction over time. Total monetized benefits are driven primarily by the reduction in premature fatalities each year, which account for between 89 and 96 percent of total benefits.

VIII.C-2 Estimated Annual Monetary Value of Reductions in Incidence of Health and Welfare Effects Based on 2014 Modeling (Billions of 2007$)[A]

Health Effect	*Pollutant*	*Within Transport Rule Region*	*Beyond Transport Rule Region[B]*	*Total*
Premature Mortality (Pope et al. 2002 PM mortality and Bell et al. 2004 ozone mortality estimates)				
3% discount rate	$PM_{2.5}$ & O_3	$100 ($8.3–$320)	$0.3 ($0.01–$0.9)	$100 ($8.3–$320)
7% discount rate	$PM_{2.5}$ & O_3	$94 ($7.5–$280)	$0.2 ($0.01–$0.8)	$94 ($7.5–$290)
Premature Mortality (Laden et al. 2006 PM mortality and Levy et al. 2005 ozone mortality estimates)				
3% discount rate	$PM_{2.5}$ & O_3	$270 ($23–$770)	$0.7 ($0.05–$2)	$270 ($23–$770)
7% discount rate	$PM_{2.5}$ & O_3	$240 ($21–$700)	$0.6 ($0.05–$1.8)	$240 ($21–$700)
Chronic Bronchitis	$PM_{2.5}$	$4.2 ($0.2–$19)	$0.01 ($-0.003–$0.06)	$4.2 ($0.2–$19)
Non-fatal heart attacks				
3% discount rate	$PM_{2.5}$	$1.7 ($0.3–$4.2)	$0.004 ($0.003–$0.01)	$1.7 ($0.3–$4.2)
7% discount rate	$PM_{2.5}$	$1.3 ($0.3–$3.1)	$0.004 ($0.002–$0.001)	$1.3 ($0.3–$3.1)
Hospital admissions—respiratory	$PM_{2.5}$ & O_3	$0.04 ($0.02–$0.06)	---	$0.04 ($0.02–$0.06)
Hospital admissions—cardiovascular	$PM_{2.5}$	$0.09 ($0.01–$0.2)	---	$0.09 ($0.01–$0.2)
Emergency room visits for asthma	$PM_{2.5}$ & O_3	$0.003 ($0.002–$0.006)	---	$0.003 ($0.002–$0.006)
Acute bronchitis	$PM_{2.5}$	$0.008 (<$-0.01–$0.02)[C]	---	$0.008 (<$-0.01–$0.02)[C]
Lower respiratory symptoms	$PM_{2.5}$	$0.004 ($0.002–$0.009)	---	$0.004 ($0.002–$0.009)
Upper respiratory symptoms	$PM_{2.5}$	$0.005 (<$0.01–$0.014)	---	$0.005 (<$0.01–$0.014)
Asthma exacerbation	$PM_{2.5}$	$0.02 ($0.002–$0.08)	---	$0.02 ($0.002–$0.08)
Lost work days	$PM_{2.5}$	$0.2 ($0.17–$0.24)	---	$0.2 ($0.17–$0.24)
School loss days	O_3	$0.01	---	$0.01

		($0.004–$0.013)		($0.004–$0.013)
Minor restricted-activity days	$PM_{2.5}$ & O_3	$0.7 ($0.3–$1)	---	$0.7 ($0.3–$1)
Recreational visibility, Class I areas	$PM_{2.5}$			$4.1
Social cost of carbon (3% discount rate, 2014 value)	CO_2			$0.6
Monetized total Benefits (Pope et al. 2002 $PM_{2.5}$ mortality and Bell et al. 2004 ozone mortality estimates)				
3% discount rate	$PM_{2.5}$, O_3	$110 ($8.8–$340)	$0.28 ($0.01–$0.9)	$120 ($14–$350)
7% discount rate	$PM_{2.5}$, O_3	$100 ($8–$310)	$0.25 ($0.01–$0.85)	$110 ($13–$320)
Monetized total Benefits (Laden et al. 2006 $PM_{2.5}$ mortality and Levy et al. 2005 ozone mortality estimates)				
3% discount rate	$PM_{2.5}$, O_3	$270 ($24–$800)	$0.7 ($0.05–$2.1)	$280 ($29–$810)
7% discount rate	$PM_{2.5}$, O_3	$250 ($22–$720)	$0.6 ($0.04–$1.9)	$250 ($26–$730)

[A] Values rounded to two significant figures. Benefits from reducing other criteria pollutants and hazardous air pollutants and ecosystem effects are not included here.

[B] Monetary value of endpoints marked with dashes are < $100,000.

[C] The negative estimates for certain endpoints are the result of the weak statistical power of the study used to calculate these health impacts and do not suggest that increases in air pollution exposure result in decreased health impacts.

Source: EPA, 2011

BILLING CODE 6560–50–C

5. How do the benefits in 2012 compare to 2014?

The magnitude of SO_2 emission reductions achieved under the rule is actually larger in 2012 than in 2014, due to substantial emission reductions expected to occur in the baseline (*i.e.,* unrelated to the Transport Rule) between those years. As a consequence, EPA expects correspondingly greater reductions in harmful effects to accrue in 2012 compared to 2014.

As presented in Table VIII.C–1, the Transport Rule is expected to prevent between 13,000 and 34,000 premature deaths annually from 2014 onward due to reductions in ambient $PM_{2.5}$ concentrations, which are most significantly impacted by SO_2 emission reductions. Based on EPA's analysis of power sector emission reductions under the Transport Rule, the decline in SO_2 in 2012 is 4 percent greater than the decline in SO_2 in 2014 in the states modeled. EPA therefore anticipates that the Transport Rule will deliver greater reductions in ambient $PM_{2.5}$ concentrations in 2012 and increased annual benefits to human health and welfare beyond those presented in this section.

6. How do the benefits compare to the costs of this final rule?

The estimated annual private costs to implement the emission reduction requirements of the final rule for the Transport Rule states are $1.85 billion in 2012 and $0.83 billion in 2014 (2007 $). These costs are the annual incremental electric generation production costs that are expected to occur with the Transport Rule. The EPA uses these costs as compliance cost estimates in developing cost-effectiveness estimates.

In estimating the net benefits of regulation, the appropriate cost measure is ''social costs.'' Social costs represent the welfare costs of the rule to society. These costs do not consider transfer payments (such as taxes) that are simply redistributions of wealth. The social costs of this rule are estimated to be approximately $0.81 billion in 2014 assuming either a 3 percent discount rate or a 7 percent discount rate. Thus, the annual net benefit (social benefits minus social costs) as shown in Table VIII.C–3 for the Transport Rule is approximately $120 to $280 billion or

$110 to $250 billion (3 percent and 7 percent discount rates, respectively) in 2014. Implementation of the rule is expected to provide society with a substantial net gain in social welfare based on economic efficiency criteria.

A listing of the benefit categories that could not be quantified or monetized in our benefit estimates is provided in Table VIII.C–4.

TABLE VIII.C–3—SUMMARY OF ANNUAL BENEFITS, COSTS, AND NET BENEFITS OF THE FINAL TRANSPORT RULE IN 2014

[Billions of 2007$] [a]

Description	Transport Rule remedy (billions of 2007 $)	
	3% discount rate	7% discount rate
Social costs	$0.81	$0.81.
Total monetized benefits [b]	$120 to $280	$110 to $250.
Net benefits (benefits-costs)	$120 to $280	$110 to $250.

[a] All estimates are for 2014, and are rounded to two significant figures.

[b] The total monetized benefits reflect the human health benefits associated with reducing exposure to $PM_{2.5}$ and ozone and the welfare benefits associated with improved visibility in Class I areas. The reduction in premature mortalities account for over 90 percent of total monetized $PM_{2.5}$ and ozone benefits.

The annualized regional cost of the rule, as quantified here, is EPA's best assessment of the cost of implementing the Transport Rule. These costs are generated from rigorous economic modeling of changes in the power sector expected from the rule. This type of analysis, using IPM, has undergone peer review and been upheld in federal courts. The direct cost includes, but is not limited to, capital investments in pollution controls, operating expenses of the pollution controls, investments in new generating sources, and additional fuel expenditures. The EPA believes that these costs reflect, as closely as possible, the additional costs of the Transport Rule to industry. The relatively small cost associated with monitoring emissions, reporting, and recordkeeping for affected sources is not included in these annualized cost estimates, but EPA has done a separate analysis and estimated the cost to be about $26 million (see section XII.B, Paperwork Reduction Act). However, there may exist certain costs that EPA has not quantified in these estimates. These costs may include costs of transitioning to this rule, such as the costs associated with the retirement of smaller or less efficient EGUs, employment shifts as workers are retrained at the same company or re-employed elsewhere in the economy, and certain relatively small permitting costs associated with Title V that new program entrants face.

An optimization model was employed that assumes cost minimization. Costs may be understated if the regulated community chooses not to minimize its compliance costs in the same manner to comply with the rules. Although EPA has not quantified these costs, the Agency believes that they are small compared with the quantified costs of the program to the power sector. However, EPA's experience and results of independent evaluation suggests that costs are likely to be lower by some degree (see RIA for details). The annualized cost estimates presented are the best and most accurate based upon available information. In a separate analysis, EPA estimates the indirect costs and impacts of higher electricity prices on the entire economy. These impacts are summarized in the RIA for this final rule.

Every benefit-cost analysis examining the potential effects of a change in environmental protection requirements is limited to some extent by data gaps, model capabilities (such as geographic coverage), and uncertainties in the underlying scientific and economic studies used to configure the benefit and cost models. Gaps in the scientific literature often result in the inability to estimate quantitative changes in health and environmental effects, or to assign economic values even to those health and environmental outcomes that can be quantified. While uncertainties in the underlying scientific and economics literatures (that may result in overestimation or underestimation of benefits) are discussed in detail in the economic analyses and its supporting documents and references, the key uncertainties which have a bearing on the results of the benefit-cost analysis of this rule include the following:

- EPA's inability to quantify potentially significant benefit categories;
- Uncertainties in population growth and baseline incidence rates;
- Uncertainties in projection of emission inventories and air quality into the future;
- Uncertainty in the estimated relationships of health and welfare effects to changes in pollutant concentrations, including the shape of the C–R function, the size of the effect estimates, and the relative toxicity of the many components of the PM mixture;
- Uncertainties in exposure estimation; and
- Uncertainties associated with the effect of potential future actions to limit emissions.

Despite these uncertainties, we believe the benefit-cost analysis provides a reasonable indication of the expected economic benefits of the rulemaking in future years under a set of reasonable assumptions. This approach calculates a mean value across value of a statistical life (VSL) estimates derived from 26 labor market and contingent valuation studies published between 1974 and 1991. The mean VSL across these studies is $6.3 million (2000$).[97] The benefits estimates generated for this rule are subject to a number of assumptions and uncertainties, which are discussed throughout the RIA document.

As Table VIII.C–2 indicates, total annual monetary benefits are driven primarily by the reduction in premature mortalities each year. Some key assumptions underlying the primary estimate for the premature mortality category include the following:

(1) EPA assumes inhalation of fine particles is causally associated with premature death at concentrations near those experienced by most Americans on a 24-hour basis. Plausible biological mechanisms for this effect have been hypothesized for the endpoints included in the primary analysis, and the weight of the available epidemiological evidence supports an assumption of causality.

[97] In this analysis, we adjust the VSL to account for a different currency year (2007$) and to account for income growth to 2014. After applying these adjustments to the $6.3 million value, the VSL is $8.7 million.

(2) EPA assumes all fine particles, regardless of their chemical composition, are equally potent in causing premature mortality. This is an important assumption, because the proportion of certain components in the PM mixture produced via precursors emitted from EGUs may differ significantly from direct PM released from automotive engines and other industrial sources, but no clear scientific grounds exist for supporting differential effects estimates by particle type.

(3) We assume that the health impact function for fine particles is linear down to the lowest air quality levels modeled in this analysis. Thus, the estimates include health benefits from reducing fine particles in areas with varied concentrations of $PM_{2.5}$, including both regions that are in attainment with the fine particle standard and those that do not meet the standard down to the lowest modeled concentrations.

The EPA recognizes the difficulties, assumptions, and inherent uncertainties in the overall enterprise. The analyses upon which the Transport Rule is based were selected from the peer-reviewed scientific literature. We used up-to-date assessment tools, and we believe the results are highly useful in assessing this rule.

There are a number of health and environmental effects that we were unable to quantify or monetize. A complete benefit-cost analysis of the Transport Rule requires consideration of all benefits and costs expected to result from the rule, not just those benefits and costs which could be expressed here in dollar terms. A listing of the benefit categories that were not quantified or monetized in our estimate are provided in Table VIII.C–4.

TABLE VIII.C–4—UNQUANTIFIED AND NON-MONETIZED EFFECTS OF THE TRANSPORT RULE

Pollutant/Effect	Endpoint
PM: Health [a]	Low birth weight.
	Pulmonary function.
	Chronic respiratory diseases other than chronic bronchitis.
	Non-asthma respiratory emergency room visits.
	UVb exposure [b].
PM: Welfare	Household soiling.
	Visibility in residential areas.
	Visibility in non-class I areas and class 1 areas in NW, NE, and Central regions.
	UVb exposure [b].
	Global climate impacts [b].
Ozone: Health	Chronic respiratory damage.
	Premature aging of the lungs.
	Non-asthma respiratory emergency room visits.
	UVb exposure [b].
Ozone: Welfare	Yields for:
	—Commercial forests.
	—Fruits and vegetables, and
	—Other commercial and noncommercial crops.
	Damage to urban ornamental plants.
	Recreational demand from damaged forest aesthetics.
	Ecosystem functions.
	Increased exposure to UVb [b].
	Climate impacts.
NO_2: Health	Respiratory hospital admissions.
	Respiratory emergency department visits.
	Asthma exacerbation.
	Acute respiratory symptoms.
	Premature mortality.
	Pulmonary function.
NO_2: Welfare	Commercial fishing and forestry from acidic deposition effects.
	Commercial fishing, agriculture and forestry from nutrient deposition effects.
	Recreation in terrestrial and estuarine ecosystems from nutrient deposition effects.
	Other ecosystem services and existence values for currently healthy ecosystems.
	Coastal eutrophication from nitrogen deposition effects.
SO_2: Health	Respiratory hospital admissions.
	Asthma emergency room visits.
	Asthma exacerbation.
	Acute respiratory symptoms.
	Premature mortality.
	Pulmonary function.
SO_2: Welfare	Commercial fishing and forestry from acidic deposition effects.
	Recreation in terrestrial and aquatic ecosystems from acid deposition effects.
	Increased mercury methylation.
Mercury: Health	Incidence of neurological disorders.
	Incidence of learning disabilities.
	Incidences in developmental delays.
Mercury: Welfare	Impact on birds and mammals (*e.g.,* reproductive effects).
	Impacts to commercial, subsistence and recreational fishing.

Source: EPA.

[a] In addition to primary economic endpoints, there are a number of biological responses that have been associated with PM health effects including morphological changes and altered host defense mechanisms. The public health impact of these biological responses may be partly represented by our quantified endpoints.

[b] May result in benefits or disbenefits.

7. What are the unquantified and non-monetized benefits of the Transport Rule emission reductions?

Important benefits beyond the human health and welfare benefits quantified in this section and the RIA are expected to occur from this rule. These other benefits occur directly from NO_X and SO_2 emission reductions and from co-benefits due to Transport Rule compliance. These benefits are listed in Table VIII.C–4. Some of the more important examples include: Reduced acidification and, in the case of NO_X, eutrophication of water bodies; possible reduced nitrate contamination of drinking water; and reduced acid and particulate deposition that causes damages to cultural monuments, as well as, soiling and other materials damage. To illustrate the important nature of benefit categories EPA is currently unable to monetize, we discuss four categories of public welfare and environmental impacts related to reductions in emissions required by the Transport Rule: Reduced acid deposition, reduced eutrophication of estuaries, reduced mercury methylation and deposition, and reduced vegetation impairment from ozone.

a. What are the benefits of reduced deposition of sulfur and nitrogen to aquatic, forest, and coastal ecosystems?

Atmospheric deposition of sulfur and nitrogen, often referred to as acid rain, occurs when emissions of SO_2 and NO_X react in the atmosphere (with water, oxygen, and oxidants) to form various acidic compounds. These acidic compounds fall to earth in either a wet form (rain, snow, and fog) or a dry form (gases and particles). Prevailing winds can transport acidic compounds hundreds of miles, across state borders. These compounds are deposited onto terrestrial and aquatic ecosystems across the U.S., contributing to the problems of acidification.

(1) Acid Deposition and Acidification of Lakes and Streams

The extent of adverse effects of acid deposition on freshwater and forest ecosystems depends largely upon the ecosystem's ability to neutralize the acid. The neutralizing ability depends largely on the watershed's physical characteristics, such as geology, soils, and size. A key indicator of neutralizing ability is termed Acid Neutralizing Capacity (ANC). Higher ANC indicates greater ability to neutralize acidity. Acidic conditions occur more frequently during rainfall and snowmelt that cause high flows of water, and less commonly during low-flow conditions except where chronic acidity conditions are severe. Biological effects are primarily attributable to a combination of low pH and high inorganic aluminum concentrations. Biological effects of episodes include reduced fish condition factor—changes in species composition and declines in aquatic species richness across multiple taxa, ecosystems and regions—as well as fish mortality. Waters that are sensitive to acidification tend to be located in small watersheds that have few alkaline minerals and shallow soils. Conversely, watersheds that contain alkaline minerals, such as limestone, tend to have waters with a high ANC. Areas especially sensitive to acidification include portions of the Northeast (particularly, the Adirondack and Catskill Mountains, portions of New England, and streams in the mid-Appalachian highlands) and southeastern streams. This regulatory action will decrease acid deposition within and downwind of the transport region and is likely to have positive effects on the health and productivity of aquatic ecosystems in the region.

(2) Acid Deposition and Forest Ecosystem Impacts

Acidifying deposition has altered major biogeochemical processes in the U.S. by increasing the nitrogen and sulfur content of soils, accelerating nitrate and sulfate leaching from soil to drainage waters, depleting base cations (especially calcium and magnesium) from soils, and increasing the mobility of aluminum. Inorganic aluminum is toxic to some tree roots. Plants affected by high levels of aluminum from the soil often have reduced root growth, which restricts the ability of the plant to take up water and nutrients, especially calcium.[98] These direct effects can, in turn, influence the response of these plants to climatic stresses such as droughts and cold temperatures. They can also influence the sensitivity of plants to other stresses, including insect pests and disease,[99] leading to increased mortality of canopy trees.

Both coniferous and deciduous forests throughout the eastern U.S. are experiencing gradual losses of base cation nutrients from the soil due to accelerated leaching from acidifying deposition. This change in nutrient availability may reduce the quality of forest nutrition over the long term. Evidence suggests that red spruce and sugar maple in some areas in the eastern U.S. have experienced declining health because of this deposition. For red spruce *(Picea rubens)*, dieback or decline has been observed across high elevation landscapes of the northeastern U.S. and, to a lesser extent, the southeastern U.S. Acidifying deposition has been implicated as a causal factor.[100]

This regulatory action will decrease acid deposition within and downwind of the transport region and is likely to have positive effects on the health and productivity of forest systems in the region.

b. Coastal Ecosystems

Since 1990, a large amount of research has been conducted on the impact of nitrogen deposition to coastal waters. Nitrogen is often the limiting nutrient in coastal ecosystems. Increasing the levels of nitrogen in coastal waters can cause significant changes to those ecosystems. In recent decades, human activities have accelerated nitrogen nutrient inputs, causing excessive growth of algae and leading to degraded water quality and associated impairments of estuarine and coastal resources.

Atmospheric deposition of nitrogen is a significant source of nitrogen to many estuaries. The amount of nitrogen entering estuaries due to atmospheric deposition varies widely, depending on the size and location of the estuarine watershed and other sources of nitrogen in the watershed. A recent assessment of 141 estuaries nationwide by the National Oceanic and Atmospheric Administration (NOAA) concluded that 19 estuaries (13 percent) suffered from moderately high or high levels of eutrophication due to excessive inputs of both nitrogen and phosphorus, and a majority of these estuaries are located in the coastal area from North Carolina to Massachusetts.[101] For estuaries in the Mid-Atlantic region, the contribution of atmospheric distribution to total nitrogen loads is estimated to range between 10 percent and 58 percent.[102]

[98] U.S. Environmental Protection Agency (U.S. EPA). 2008. Integrated Science Assessment for Oxides of Nitrogen and Sulfur—Ecological Criteria National (Final Report). National

Center for Environmental Assessment, Research Triangle Park, NC. EPA/600/R–08/139. December. *http://cfpub.epa.gov/ncea/cfm/recordisplay.cfm?deid=201485.*

[99] Joslin, J.D., Kelly, J.M., van Miegroet, H. 1992. Soil chemistry and nutrition of North American spruce-fir stands: evidence for recent change. Journal of Environmental Quality, 21, 12–30.

[100] DeHayes, D.H., P.G. Schaberg, G.J. Hawley, and G.R. Strimbeck. 1999. Acid rain impacts on calcium nutrition and forest health. Bioscience 49(10):789–800.

[101] National Oceanic and Atmospheric Administration (NOAA). 2007. Annual Commercial Landing Statistics. August. *http://www.st.nmfs.noaa.gov/st1/commercial/landings/annual_landings.html.*

[102] Valigura, R.A., R.B. Alexander, M.S. Castro, T.P. Meyers, H.W. Paerl, P.E. Stacy, and R.E. Turner. 2001. Nitrogen Loading in Coastal Water

Eutrophication in estuaries is associated with a range of adverse ecological effects. The conceptual framework developed by NOAA emphasizes four main types of eutrophication effects: low dissolved oxygen (DO), harmful algal blooms (HABs), loss of submerged aquatic vegetation (SAV), and low water clarity. Low DO disrupts aquatic habitats, causing stress to fish and shellfish, which, in the short-term, can lead to episodic fish kills and, in the long-term, can damage overall growth in fish and shellfish populations. Low DO also degrades the aesthetic qualities of surface water. In addition to often being toxic to fish and shellfish, and leading to fish kills and aesthetic impairments of estuaries, HABs can, in some instances, also be harmful to human health. SAV provides critical habitat for many aquatic species in estuaries and, in some instances, can also protect shorelines by reducing wave strength. Therefore, declines in SAV due to nutrient enrichment are an important source of concern. Low water clarity is the result of accumulations of both algae and sediments in estuarine waters. In addition to contributing to declines in SAV, high levels of turbidity also degrade the aesthetic qualities of the estuarine environment.

Estuaries in the eastern United States are an important source of food production, in particular fish and shellfish production. The estuaries are capable of supporting large stocks of resident commercial species, and they serve as the breeding grounds and interim habitat for several migratory species.

This rule is anticipated to reduce nitrogen deposition within and downwind of the Transport Rule states. Thus, reductions in the levels of nitrogen deposition will have a positive impact upon current eutrophic conditions in estuaries and coastal areas in the region.

c. Mercury Methylation and Deposition

Mercury is a highly neurotoxic contaminant that enters the food web as a methylated compound, methylmercury.[103] The contaminant is concentrated in higher trophic levels, including fish eaten by humans. Experimental evidence has established that only inconsequential amounts of methylmercury can be produced in the absence of sulfate. Current evidence indicates that in watersheds where mercury is present, increased SO_X deposition very likely results in methylmercury accumulation in fish.[104] [105] The SO_2 Integrated Science Assessment concluded that evidence is sufficient to infer a causal relationship between sulfur deposition and increased mercury methylation in wetlands and aquatic environments.

d. Ozone Vegetation Effects

Ozone causes discernible injury to a wide array of vegetation.[106] In terms of forest productivity and ecosystem diversity, ozone may be the pollutant with the greatest potential for regional-scale forest impacts.[107] Studies have demonstrated repeatedly that ozone concentrations commonly observed in polluted areas can have substantial impacts on plant function.[108] [109]

Assessing the impact of ground-level ozone on forests in the eastern United States involves understanding the risks to sensitive tree species from ambient ozone concentrations and accounting for the prevalence of those species within the forest. As a way to quantify the risks to particular plants from ground-level ozone, scientists have developed ozone-exposure/tree-response functions by exposing tree seedlings to different ozone levels and measuring reductions in growth as ''biomass loss.'' Typically, seedlings are used because they are easy to manipulate and measure their growth loss from ozone pollution. The mechanisms of susceptibility to ozone within the leaves of seedlings and mature trees are identical, and the decreases predicted using the seedlings should be related to the decrease in overall plant fitness for mature trees, but the magnitude of the effect may be higher or lower depending on the tree species.[110] In areas where certain ozone-sensitive species dominate the forest community, the biomass loss from ozone can be significant. Significant biomass loss can be defined as a more than 2 percent annual biomass loss, which would cause long-term ecological harm, as the short-term negative effects on seedlings compound to affect long-term forest health.[111]

Urban ornamentals are an additional vegetation category likely to experience some degree of negative effects associated with exposure to ambient ozone levels. Because ozone causes visible foliar injury, the aesthetic value of ornamentals (such as petunia, geranium, and poinsettia) in urban landscapes would be reduced. Sensitive ornamental species would require more frequent replacement and/or increased maintenance (fertilizer or pesticide application) to maintain the desired appearance because of exposure to ambient ozone.[112] In addition, many businesses rely on healthy-looking vegetation for their livelihoods (*e.g.,* horticulturalists, landscapers, Christmas tree growers, farmers of leafy crops, etc.) and a variety of ornamental species have been listed as sensitive to ozone.[113]

D. Costs and Employment Impacts

1. Transport Rule Costs and Employment Impacts

For the affected region, the projected annual private incremental costs of the rule to the power industry are $1.4 billion in 2012 and $0.8 billion in 2014. These costs represent the private compliance cost to the electric generating industry of reducing NO_X and SO_2 emissions to meet the requirements set forth in the rule. Estimates are in 2007 dollars.

In estimating the net benefits of regulation, the appropriate cost measure

Bodies: An Atmospheric Perspective. Washington, DC: American Geophysical Union.

[103] U.S. Environmental Protection Agency (U.S. EPA). 2008. Integrated Science Assessment for Sulfur Oxides—Health Criteria (Final Report). National Center for Environmental Assessment, Research Triangle Park, NC. September. *http://cfpub.epa.gov/ncea/cfm/recordisplay.cfm?deid=198843.*

[104] Drevnick, P.E., D.E. Canfield, P.R. Gorski, A.L.C. Shinneman, D.R. Engstrom, D.C.G. Muir, G.R. Smith, P.J. Garrison, L.B. Cleckner, J.P. Hurley, R.B. Noble, R.R. Otter, and J.T. Oris. 2007. Deposition and cycling of sulfur controls mercury accumulation in Isle Royale fish. Environmental Science and Technology 41(21):7266–7272.

[105] Munthe, J., R.A. Bodaly, B.A. Branfireun, C.T. Driscoll, C.C. Gilmour, R. Harris, M. Horvat, M. Lucotte, and O. Malm. 2007. Recovery of mercury-contaminated fisheries. AMBIO:A Journal of the Human Environment 36:33–44.

[106] Fox, S., Mickler, R.A. (Eds.). 1996. Impact of Air Pollutants on Southern Pine Forests. Ecological Studies. (Vol. 118, 513 pp.) New York: Springer-Verlag.

[107] U.S. Environmental Protection Agency (U.S. EPA). 2006. Air Quality Criteria for Ozone and Related Photochemical Oxidants (Final). EPA/600/R–05/004aF–cF. Washington, DC: U.S. EPA. February. *http://cfpub.epa.gov/ncea/CFM/recordisplay.cfm?deid=149923.*

[108] De Steiguer, J., Pye, J., Love, C. 1990. Air Pollution Damage to U.S. Forests. Journal of Forestry, 88(8), 17–22.

[109] Pye, J.M. 1988. Impact of ozone on the growth and yield of trees: A review. Journal of Environmental Quality, 17, 347–360.

[110] Chappelka, A.H., Samuelson, L.J. 1998. Ambient ozone effects on forest trees of the eastern United States: a review. New Phytologist, 139, 91–108.

[111] Heck, W.W. & Cowling, E.B. 1997. The need for a long term cumulative secondary ozone standard—an ecological perspective. Environmental Management, January, 23–33.

[112] U.S. Environmental Protection Agency (U.S. EPA). 2007. Review of the National Ambient Air Quality Standards for Ozone: Policy assessment of scientific and technical information. Staff paper. Office of Air Quality Planning and Standards. EPA–452/R–07–007a. July. *http://www.epa.gov/ttn/naaqs/standards/ozone/data/2007_07_ozone_staff_paper.pdf.*

[113] Abt Associates, Inc. 2005. U.S. EPA. Urban ornamental plants: sensitivity to ozone and potential economic losses. Memorandum to Bryan Hubbell and Zachary Pekar.

is ''social costs.'' Social costs represent the welfare costs of the rule to society. These costs do not consider transfer payments (such as taxes) that are simply redistributions of wealth. The social costs of this rule are estimated to be approximately $0.8 billion annually in 2014. Overall, the economic impacts of the Transport Rule are modest in 2014, particularly in light of the large benefits ($120 to $280 billion annually at a 3 percent discount rate and $110 to $250 billion annually at a 7 percent discount rate) we expect, as shown in section XII.A of this preamble. Ultimately, we believe the electric power industry will pass along most of the costs of the rule to consumers, so that the costs of the rule will largely fall upon the consumers of electricity. For more information on electricity price changes that result from this final rule, refer to section XII.H (Statement of Energy Effects) later in this preamble.

For this rule, EPA analyzed the costs using the Integrated Planning Model (IPM). The IPM is a dynamic linear programming model that can be used to examine the economic impacts of air pollution control policies for SO_2 and NO_X throughout the contiguous United States for the entire power system. Documentation for IPM can be found in the docket for this rulemaking or at *http://www.epa.gov/airmarkets/progsregs/epa-ipm/index.html.*

EPA also included an analysis of impacts of the final rule to industries outside of the electric power sector by using the Multi-Market Model. This model is a partial equilibrium economic impact model that includes 100 sectors that cover energy, manufacturing, and service applications and is designed to capture the short-run effects associated with an environmental regulation. This model was used to estimate economic impacts for the proposed MATS, and the promulgated industrial boilers major and area source standards and CISWI standard.

We use the Multi-Market Model to estimate the social costs of the final rule. Using this model, we estimate the social costs of the final rule to be approximately $0.8 billion (2007 dollars), which is close to the compliance costs. Documentation for the Multi-Market Model can be found in the RIA for this final rule.

Also note that as explained in section V.B (Baseline for Pollution Transport Analysis), the baseline used in this analysis assumes no CAIR. As explained in that section, EPA believes that this is the most appropriate baseline to use for purposes of determining whether an upwind state has an impact on a downwind monitoring site in violation of section 110(a)(2)(D).

Although a stand-alone analysis of employment impacts is not included in a standard cost-benefit analysis, the current economic climate has led to heightened concerns about potential job impacts. Such an analysis is of particular concern in the current economic climate as sustained periods of excess unemployment may introduce a wedge between observed (market) wages and the social cost of labor. In such conditions, the opportunity cost of labor required by regulated sectors to bring their facilities into compliance with an environmental regulation may be lower than it would be during a period of full employment (particularly if regulated industries employ otherwise idled labor to design, fabricate, or install the pollution control equipment required under this rule). For that reason, EPA also includes estimates of job impacts associated with the final rule. EPA presents an estimate of short-term employment opportunities as a result of increased demand for pollution control equipment. Overall, the results suggest that the final rule could support a net increase of roughly 2,250 job-years in direct employment in 2014.

The basic approach to estimate these employment impacts involved using projections from IPM from the final rule analysis such as the amount of capacity that will be retrofit with control technologies, for various energy market implications, along with data on labor and resource needs of new pollution controls and labor productivity from secondary sources, to estimate employment impacts for 2014. This analysis was also applied for the proposed MATS. For more information, refer to Appendix D of the RIA for the final Transport Rule.''

EPA relied on Morgenstern, et al. (2002), a study that is a basis for employment impacts estimated for the final industrial boiler major and area source rules and CISWI standard, and the proposed MATS. The Morgenstern study identifies three economic mechanisms by which pollution abatement activities can indirectly influence jobs: (1) Higher production costs raise market prices, higher prices reduce consumption, and employment within an industry falls (''demand effect''); (2) pollution abatement activities require additional labor services to produce the same level of output (''cost effect''); and (3) post regulation production technologies may be more or less labor intensive (*i.e.,* more/less labor is required per dollar of output) (''factor-shift effect'').

Using plant-level Census information between the years 1979 and 1991, Morgenstern, et al., estimate the size of each effect for four polluting and regulated industries (petroleum, plastic material, pulp and paper, and steel). On average across the four industries, each additional $1 million spending on pollution abatement results in a small net increase of 1.6 jobs; however, the estimated effect is not statistically significant. As a result, the authors conclude that increases in pollution abatement expenditures do not necessarily cause economically significant employment changes. The conclusion is similar to Berman and Bui (2001), who found that increased air quality regulation in Los Angeles did not cause large employment changes. For more information, please refer to the RIA for this final rule.

The ranges of job effects calculated using the Morgenstern, et al., approach are listed in Table VIII.D–1.

TABLE VIII.D–1—RANGE OF JOB EFFECTS FOR THE ELECTRICITY SECTOR

[Estimates using Morgenstern, et al. (2002)]

	Demand effect	Cost effect	Factor shift effect	Net effect
Change in Full-Time Jobs per Million Dollars of Environmental Expenditure [a].	−3.56	2.42	2.68	1.55.
Standard Error	2.03	0.83	1.35	2.24.
EPA Estimate for Final Rule [b]	+ 200 to −3,000	+ 400 to 2,000	0 to 2,000	−1,000 to + 3,000.

[a] Expressed in 1987 dollars. *See* footnote a of Table 8–3 in the RIA for the inflation adjustment factor used in the analysis.

[b] According to the 2007 Economic Census, the electric power generation, transmission, and distribution sector (NAICS 2211) had approximately 510,000 paid employees.

EPA recognizes there may be other job effects which are not considered in the Morgenstern, et al., study. Although EPA has considered some economy-wide changes in industry output as shown earlier with the Multi-Market model, we do not have sufficient information to quantify other associated job effects associated with this rule.

2. End-Use Energy Efficiency

EPA believes that achievement of energy efficiency (EE) improvements in homes, buildings, and industry is an important component of achieving emission reductions from the power sector while minimizing associated compliance costs. By reducing electricity demand, energy efficiency avoids emissions of all pollutants associated with electricity generation, including emissions of NO_X and SO_2 targeted by this final rule, and reduces the need for investments in EGU emission control technologies in order to meet emission reduction requirements. Moreover, energy efficiency can often be implemented at a lower cost than traditional control technologies.

EPA recognizes that significant opportunities remain for energy efficiency improvements in businesses, homes, and industry. However, there are several informational and market barriers that limit investment in cost-effective energy efficient practices. Several federal programs authorized under the CAA, including ENERGY STAR, are designed to address these barriers.

Congress, EPA, and states have all recognized the value of incorporating energy efficiency into air regulatory programs. Several allowance-based programs—including the Acid Rain Program, EPA's NO_X Budget Trading program, and the Regional Greenhouse Gas Initiative (an effort of 10 states from the Northeast and Mid-Atlantic regions) – have provided mechanisms for rewarding energy efficiency through either the award of allowances, typically through the use of a fixed set-aside pool, or the use of revenues obtained through the auction of allowances. The emission caps established by these programs are unaffected by this approach. However, to the extent electricity demand reductions are realized, compliance costs are reduced. In addition to these allowance-based programs, EPA has also provided guidance [114] concerning the recognition, in SIPs, of emission reduction benefits of energy efficiency and has approved the inclusion of EE measures in individual SIPs.[115]

While all remedy options considered in the proposed rule would have lead to an increase in the relative cost-effectiveness of EE investments by internalizing environmental costs associated with emission of these pollutants, EPA took comment on whether EPA has authority, and whether it would be appropriate for EPA, to consider EE in developing the allowance allocation methodology and to consider other approaches for encouraging EE in the Transport Rule.

Some commenters suggested that EPA has authority to consider EE in developing the allocation methodology. Other commenters do not believe EPA has the authority to consider EE. Some commenters suggested that EPA should establish an EE set-aside provision. Other commenters suggested that EPA should allow, and help, states to establish EE set-asides as states transition from Transport Rule FIPs to SIPs. EPA believes that, while EE set-asides can be effective at encouraging incremental investments in EE, EE set-asides are more likely to be practically and effectively implemented at the state level. Establishing EE set-asides in the allowance allocation provisions in the final rule would not allow for the tailoring of the set-asides to the unique characteristics of individual states and would not build on the existing EE program delivery infrastructure that many states already possess. Instead of establishing EPA-administered EE set-asides in the final rule, EPA is clarifying that it allows and supports EE set-asides (including auction-based approaches) in abbreviated or full SIPs that states may submit, as provided in the final rule. Under this approach states have the ability to implement EE set-asides tailored to their state circumstances, if they choose. EPA anticipates providing additional information in the future for states on EE set-asides, as needed.[116]

As discussed elsewhere in this preamble, the final rule provides for submission and approval of abbreviated and full SIPs providing for continued state participation in the Transport Rule trading programs, and adopting alternative allowance allocation methodologies (which may include EE set-asides) to the allocation methodologies adopted in the FIPs. While the final rule establishes certain requirements for approval of any such alternative allocation methodology, the final rule provides states flexibility to create state-implemented EE set-asides.

IX. Related Programs and the Transport Rule

A. Transition From the Clean Air Interstate Rule

1. Key Differences Between the Transport Rule and CAIR

The Transport Rule replaces CAIR and its associated trading programs. There are a number of differences between implementation of the Transport Rule and implementation of CAIR. This section describes key implementation differences including differences in states covered, compliance deadlines, applicability, structure of the remedy, provisions for early reductions, and provisions for SIPs. The next section discusses the transition from CAIR to the Transport Rule.

States covered. The states covered by the Transport Rule differ somewhat from states covered by CAIR. This section summarizes differences in state coverage. EPA's approach to determine states covered by the Transport Rule is discussed in sections V and VI of this preamble.

The Transport Rule's SO_2 and annual NO_X requirements apply to covered sources in the 23 states listed in Table III–1 in section III of this preamble. CAIR's SO_2 and annual NO_X requirements applied to covered sources in 25 states. There are many states in common between the Transport Rule and CAIR SO_2 and annual NO_X programs. The differences are summarized in Table IX.A–1.

[114] U.S. EPA. 2004. Guidance on State Implementation Plan (SIP) Credits for Emission Reductions from Electric-Sector Energy Efficiency and Renewable Energy Measures.

http://www.epa.gov/ttn/oarpg/t1/memoranda/ereseerem_gd.pdf.

[115] Metropolitan Washington Council of Governments developed a regional air quality plan for the eight-hour ozone standard for the DC Region nonattainment area that included an EE measure. The plan was adopted by Virginia, Maryland, and the District of Columbia and the respective ozone SIPs were approved by the EPA regions in 2007.

[116] Because the question of EPA authority to create EE set-asides in the FIPs would be best addressed in the context of actual FIP provisions for EPA-created EE set-asides and EPA is, for other reasons, not adopting such provisions in the final rule, EPA is not addressing in the final rule the question of EPA's authority.

TABLE IX.A–1—DIFFERENCES IN SO_2 AND ANNUAL NO_X STATE COVERAGE BETWEEN THE TRANSPORT RULE AND CAIR

State	Transport rule SO_2 and annual NO_X programs	CAIR SO_2 and annual NO_X programs
Kansas	Yes	No.
Minnesota	Yes	No.
Nebraska	Yes	No.
Delaware	No	Yes.
District of Columbia	No	Yes.
Florida	No	Yes.
Louisiana	No	Yes.
Mississippi	No	Yes.

The Transport Rule's ozone-season NO_X requirements apply to covered sources in the 20 states listed in Table III–1 in section III of this preamble, while CAIR's ozone-season NO_X requirements applied to 26 states. There are many states in common between the Transport Rule and CAIR ozone-season NO_X programs. The differences are summarized in Table IX.A–2.

TABLE IX.A–2—DIFFERENCES IN OZONE-SEASON NO_X STATE COVERAGE BETWEEN THE TRANSPORT RULE AND CAIR

State	Transport rule ozone-season NO_X program	CAIR ozone-season NO_X program
Georgia	Yes	No.
Texas	Yes	No.
Connecticut	No	Yes.
Delaware	No	Yes.
District of Columbia	No	Yes.
Iowa	No	Yes.
Massachusetts	No	Yes.
Michigan	No	Yes.
Missouri	No	Yes.
Wisconsin	No	Yes.

In addition, EPA is proposing a supplemental notice to apply Transport Rule ozone-season requirements to the states of Iowa, Kansas, Michigan, Missouri, Oklahoma, and Wisconsin, as discussed in section III of this preamble.

The transition from CAIR to the Transport Rule is discussed in section IX.A.2 and SIPs are discussed in section X of this preamble.

Compliance deadlines. The Transport Rule reduction requirements commence January 1, 2012 for annual NO_X and SO_2 requirements and May 1, 2012 for ozone-season NO_X requirements. More stringent SO_2 reduction requirements commence January 1, 2014 for Group 1 states.

In contrast, the first phase of CAIR NO_X reductions commenced January 1, 2009 for annual NO_X requirements and May 1, 2009 for ozone-season NO_X requirements. On January 1, 2010, the first phase of CAIR SO_2 requirements commenced. However, in anticipation of CAIR, SO_2 reductions actually started as early as 2006 because of the incentive to reduce emissions and bank Title IV Acid Rain Program SO_2 allowances for use when their value would increase under CAIR in 2010 and later. The second phase of CAIR reductions would have (if not replaced by the Transport Rule) commenced January 1, 2015 for annual NO_X and SO_2 requirements, and May 1, 2015 for ozone-season NO_X requirements.

Applicability. Except for the changes to the states covered, the general applicability provisions of the final Transport Rule trading programs are essentially the same as the CAIR general applicability provisions, with a few exceptions.

First, the final Transport Rule does not allow any non-covered units to opt into the trading programs, for the reasons discussed in section VII.B of this preamble. In contrast, under CAIR, through SIPs, the states could elect to allow boilers, combustion turbines, and other combustion devices to opt into the CAIR trading programs under opt-in provisions specified by EPA.

Second, the Transport Rule FIPs' ozone-season NO_X trading program applicability provisions do not cover NO_X SIP Call small EGUs and non-EGUs that a number of CAIR states brought into the CAIR ozone-season NO_X trading program. The Transport Rule does allow any state in the ozone-season NO_X program, through SIPs, to expand the applicability of the Transport Rule ozone-season NO_X trading program to cover small EGUs. However, the Transport Rule does not allow states to expand the applicability to cover NO_X SIP Call non-EGUs, for the reasons discussed elsewhere in this preamble.

In contrast, in the CAIR trading programs, a NO_X SIP Call state could expand the applicability of the CAIR ozone-season NO_X trading program in the state in order to include all units subject to the NO_X Budget Trading Program under the NO_X SIP Call. A number of states chose to expand the CAIR ozone-season NO_X trading program applicability in this way. The transition from CAIR to the Transport Rule is discussed in section IX.A.2 and SIPs are discussed in section X of this preamble.

Structure of the remedy. The CAIR FIPs (and CAIR model trading rules adopted by a number of states in their CAIR SIPs) implemented reductions through SO_2, annual NO_X, and ozone-season NO_X interstate emission trading programs covering primarily large EGUs. The owners and operators of a covered source could buy allowances

from or sell allowances to other covered sources (or other market participants) and were required to surrender allowances equal to the source's emissions for each compliance period. CAIR's trading programs did not impose limitations on the aggregate emissions from covered units within any covered state.

The Transport Rule FIPs will also achieve the required reductions through SO_2, annual NO_X, and ozone-season NO_X interstate trading programs. However, in contrast to CAIR and for the reasons discussed in section VII of this preamble, the Transport Rule FIPs include assurance provisions specifically designed to ensure that no state's emissions will exceed that state's emission budget plus the variability limit, *i.e.,* the state's assurance level.

Another difference in the remedy structure is in the design of the SO_2 trading programs. In CAIR all of the states required to reduce SO_2 emissions were grouped together in one SO_2 trading program with no restriction on the use of SO_2 allowances from any state in the program by any source in the program. In contrast, and for the reasons discussed in section VI of this preamble, the Transport Rule divides states required to reduce SO_2 emissions into two groups with emission reduction requirements of different stringency starting in 2014 (SO_2 Group 1, whose reduction requirements become more stringent starting in 2014, and SO_2 Group 2, whose reduction requirements in 2014 do not change). A covered source may only use for compliance—with the requirements to hold allowances covering emissions and, if applicable, to surrender allowances under the assurance provisions—an SO_2 allowance issued for the SO_2 Group in which the source's state is included. In other words, an SO_2 Group 1 source may only use a SO_2 Group 1 allowance for compliance, and likewise an SO_2 Group 2 source may only use a SO_2 Group 2 allowance for compliance.

Provisions for early reductions. CAIR included provisions for covered sources to make early reductions prior to the start of CAIR's SO_2 and NO_X trading programs, bank emission allowances, and carry banked allowances into its trading programs. In contrast, the Transport Rule does not include provisions for covered sources to carry over any allowances (*i.e.,* Title IV SO_2 allowances or CAIR annual or ozone-season NO_X allowances) into the Transport Rule trading programs. EPA's reasons for not allowing the use of banked Title IV SO_2 allowances or CAIR annual or ozone-season NO_X allowances in the Transport Rule trading programs are discussed in the next section.

Provisions for SIPs. The following is a summary of the key differences between the Transport Rule and CAIR provisions for SIPs. A more detailed discussion of Transport Rule SIPs is in section X of this preamble.

The SIP provisions in the Transport Rule and CAIR are very similar. Both include provisions that allow states to submit SIP revisions (referred to as full SIPs) that replace an applicable FIP trading program with a comparable SIP trading program that has certain limited differences from the FIP trading program. Similarly, both rules include provisions that allow states to submit SIP revisions (referred to as abbreviated SIPs) that may modify certain limited provisions in the FIP trading program, which remain in place. Inclusion of this provision in the Transport Rule allows a state to modify certain elements of a Transport Rule FIP trading program in order to better meet the needs of the state. Both the Transport Rule and CAIR allow full or abbreviated SIPs that involve one or more applicable FIP trading programs. However, there are a few differences.

In particular, under the Transport Rule, states may submit SIP revisions under which the state determines allocations for the applicable trading program using either full or abbreviated SIP revisions. States could submit similar revisions under CAIR. Under the Transport Rule, the state may use the same allocation methodology as that currently used in the Transport Rule FIP trading program or some other allocation methodology. However, the Transport Rule specifies certain requirements that must be met concerning, for example, the timing of such allocation determinations, and expressly allows allowance auctions to be used. CAIR did not include similar provisions. Further, the SIP submission deadlines, allocation submission, and allocation recordation dates are different between the Transport Rule and CAIR. The Transport Rule SIP submission deadlines and allocation recordation dates are discussed in section X of this preamble.

In addition, both the Transport Rule and CAIR include provisions that allow states to submit SIP revisions under which the state expands the general applicability provisions of the ozone-season NO_X trading programs to cover certain units subject to the NO_X SIP Call. However, for the reasons discussed elsewhere in this preamble, this flexibility is more limited in the Transport Rule than it was in CAIR.

While CAIR allowed states to adopt, through full or abbreviated SIPs, opt-in provisions, the Transport Rule does not allow for opt-in provisions. The reasons for this are discussed in section VII.B of this preamble.

Finally, neither full nor abbreviated SIPs can replace FIP provisions that apply to units in Indian country within the borders of a state. For example, the FIPs include, for states within whose borders Indian country is located, an Indian country new unit set-aside. For states not having Indian country within their borders, abbreviated SIPs are limited to replacing the allowance allocation provisions of the FIPs for the state involved and may replace some or all of those provisions. However, for states having Indian country within their borders, abbreviated SIPs cannot replace the FIP provisions for the Indian country new unit set-aside. Similarly, for states not having Indian country, full SIPs can replace an entire FIP, but, in doing so, can only change the allowance allocation provisions. For states having Indian country, full SIPs can replace the FIPs except for the Indian country new unit set-aside provisions, which will remain under the applicable FIPs, and, like the abbreviated SIPs, can only change the allowance allocation provisions that are replaced.

Details of the Transport Rule provisions for abbreviated and full SIP revisions, including deadlines for submission to EPA, are discussed in section X of this preamble.

2. Transition From the Clean Air Interstate Rule to the Transport Rule

The Transport Rule replaces CAIR and its associated trading programs. This section elaborates on areas of transition from CAIR to the Transport Rule.

a. Sunsetting of CAIR, CAIR SIPs, and CAIR FIPs

The proposal explained that, for control periods in 2012 and thereafter, CAIR, CAIR SIPs, and CAIR FIPs would be replaced entirely by the Transport Rule provisions. The proposal outlined implementation of the sunsetting of CAIR and CAIR FIPs, through revisions to CAIR, §§ 51.123 and 51.124, and the CAIR FIPs, §§ 52.35 and 52.36. For the control period in these years, the CAIR trading programs would not continue, and the Administrator would not carry out any of the functions established for the Administrator in the CAIR model trading rule, the CAIR FIPs, or any state trading programs approved under CAIR. Offset and automatic penalty provisions under CAIR would not apply to excess emissions for 2011 control periods.

Also discussed were the processes for modifying provisions in Part 52 reflecting state-specific CAIR SIP and CAIR FIP requirements, which would vary depending on whether a state has an approved CAIR SIP or a CAIR FIP. The proposal further explained that sources in some states covered by CAIR or the CAIR FIPs would not be subject to the Transport Rule and that to the extent that CAIR reductions were needed or relied upon to satisfy other SIP requirements, states might need to find alternative ways to satisfy requirements for their SIPs.

EPA is finalizing regulatory changes to sunset CAIR and the CAIR FIPs. The final rule revises the general CAIR and CAIR FIP provisions in Parts 51 and 52 applicable to all CAIR states. For control periods in 2012 and thereafter, the Administrator rescinds the determination that states must meet SIP requirements under CAIR, and the requirements of the CAIR FIPs are not applicable. Further, with regard to these control periods, the Administrator will no longer carry out any of the functions established for the Administrator in the CAIR model trading rule, the CAIR FIPs, or any state trading programs approved under CAIR with the exception of enforcing the provisions for the previous control periods, if necessary.

For the reasons discussed in the proposed rule preamble (75 FR 45337), CAIR allowances allocated for these control periods cannot be used in any CAIR trading program and, as discussed below, in any Transport Rule trading program. Specifically, for the reasons discussed in the proposed rule, offset and automatic allowance penalty provisions in the CAIR trading programs will not be applied to 2011 control period excess emissions, which will remain subject to discretionary civil penalties under CAA section 113. EPA still retains all enforcement options for excess emissions during the 2011 control period. CAIR allowances allocated for 2012 and thereafter are not usable in any CAIR or Transport Rule trading program. In light of that fact, in order to prevent any confusion by owners and operators and other members of the public concerning the status of such allowances, the final rule provides that, within 90 days after publication of the final Transport Rule, the Administrator will remove post-2011 CAIR annual NO_X and ozone-season allowances from the Allowance Tracking System.

The CAIR SO_2 trading program, of course, uses Acid Rain allowances, which will remain in the Allowance Tracking System because they were created by CAA Title IV and continue to be usable in the Acid Rain Program.

The final rule also adopts the discussion in the proposed rule concerning state-specific Part 52 provisions concerning CAIR (75 FR 45337–38). With regard to Part 52 provisions reflecting EPA's adoption of ongoing CAIR FIPs for some individual states, the final rule revises the CAIR FIP provisions to make them inapplicable to control periods in 2012 and thereafter and to require the Administrator to remove from the Allowance Tracking System, CAIR allowances for these control periods. The final, state-specific CAIR FIP provisions in Part 52 essentially echo the language in the final, general CAIR provisions in Part 52 discussed above. In making the CAIR FIP provisions inapplicable to control periods in 2012 and thereafter, the final, state-specific provisions sunset the applicable CAIR FIP trading programs whether or not the CAIR FIPs were revised by approved, abbreviated CAIR SIPs. (Under CAIR, abbreviated CAIR SIPs were adopted by certain states so that states, rather than EPA, made NO_X allowance allocations.) Consequently, states with approved, abbreviated CAIR SIPs will not need to revise their abbreviated CAIR SIPs in order to sunset the CAIR trading programs to which these abbreviated SIPs applied. Thus, although such abbreviated SIPs may remain in the state SIPs, they will have no force and effect, once the CAIR FIPs sunset.

With regard to Part 52 provisions reflecting EPA's approval of full CAIR SIPs submitted to EPA by many individual states, the Court's *North Carolina* decision essentially overrides these Agency approvals of individual CAIR SIPs. (Under CAIR, full CAIR SIPs were adopted by certain states to replace CAIR FIPs and continue participation through the CAIR SIPs in the CAIR trading programs.) The Court found CAIR to be illegal and only allowed it to remain in effect temporarily. For this reason, the CAIR SIPs though approved, can have no force and effect once CAIR is replaced by this rule. For this reason, although the proposed rule indicated that states would need to submit SIP revisions to, among other things, make the CAIR SIPs inapplicable to control periods after 2011, the final rule does not require states to take any actions to revise their full or abbreviated CAIR SIPs. For states covered by CAIR or CAIR FIPs that are not subject to the Transport Rule and have relied on CAIR reductions to satisfy other SIP requirements, EPA will discuss with states alternative ways to satisfy requirements for those SIP requirements, *e.g.,* through intrastate cap and trade programs that require the level of reductions on which the state has recently relied.

b. NO_X SIP Call Units

The NO_X Budget Trading program was used by states to reduce ozone-season NO_X emissions from EGUs and large non-EGUs under NO_X SIP Call requirements. The program started in 2003 and ended in 2008. Under CAIR, a state subject to the NO_X SIP Call was allowed to expand the applicability of the CAIR ozone-season NO_X trading program in the state in order to include all units subject to the NO_X Budget Trading Program under the NO_X SIP Call and thereby to continue to meet the state's NO_X SIP Call requirements. Fourteen states chose to expand the CAIR ozone-season NO_X applicability in this way, while six states chose not to expand the applicability and instead to meet their NO_X SIP Call obligations in other ways. EPA proposed to not allow this expansion in applicability for the Transport Rule, primarily because these sources as a group did not actually reduce emissions for the NO_X Budget Trading Program or CAIR. EPA took comment on the proposed approach.

Several commenters generally advocated allowing, at state discretion, all NO_X Budget Trading Program units to be regulated under the Transport Rule ozone-season NO_X trading program. Some also questioned how states would otherwise satisfy NO_X SIP Call requirements for these units. Some commenters argued that some units did in fact make emission reductions in the NO_X Budget Trading Program, but did not provide information on specific units.

The final rule provides states an option to expand the general applicability provisions of the Transport Rule ozone-season NO_X trading program to cover small EGUs, but not other units in the NO_X SIP Call. Specifically, consistent with the comments, EPA determined that it is appropriate to allow states to expand the applicability of the Transport Rule ozone-season NO_X trading program to include units serving a generator with a nameplate capacity equal to or greater than 15 MWe producing electricity for sale. This will allow states with NO_X SIP Call obligations to meet those requirements with respect to these small EGUs. These units can be brought into the program through abbreviated or full Transport Rule SIPs. However, if a state chooses to expand the general applicability provisions, the state Transport Rule ozone-season NO_X budget cannot be increased. EPA believes that the level of

emissions from small EGUs is sufficiently small that the existing Transport Rule state budget can accommodate these units. This is consistent with the approach taken in the NO_X Budget Trading Program, where the states that added these small EGUs did not increase their NO_X SIP Call EGU budgets. This also removes concern (expressed in the proposed rule) that increasing state budgets in the Transport Rule ozone-season NO_X trading program, as part of the expansion of the applicability provisions to include small EGUs, would jeopardize elimination of a state's significant contribution to nonattainment and interference with maintenance.

With regard to large non-EGUs that were included in the NO_X Budget Trading Program (the remainder of the sources in the NO_X Budget Trading Program), the final Transport Rule, like the proposed rule, does not allow expansion of the general applicability provisions for the ozone-season NO_X trading program to include such units. As explained in the proposed rule (75 FR 43340), while some of these units may have installed controls around the start of the NO_X Budget Trading Program, EPA analysis shows that, as a group, these units did not collectively reduce emissions, their current emission rates are nearly identical to their emission rates before the start of the NO_X Budget Trading Program, and their allocations are about twice their emissions, with the result that the excess allocations were sold to covered EGUs.[117] Moreover, EPA believes that there are little or no emission reductions available by non-EGUs at the cost thresholds used in the final rule and so no basis for developing non-EGUs state budgets reflecting the elimination of significant contribution to nonattainment and interference with maintenance. For these reasons, the final rule allows states to expand the ozone-season NO_X trading program to cover small EGUs that were in the NO_X Budget Trading Program, but not to cover large non-EGUs that were in that program. As explained in the proposed rule, if a state were to do so, emissions from these units could jeopardize elimination of the state's significant contribution to nonattainment or interference with maintenance. *See* 75 FR 45340. For states that relied on large non-EGUs for emission reductions required by the NO_X SIP Call, EPA will assist in identifying ways to ensure continued, future compliance with the NO_X SIP Call requirements.

c. Early Reduction Provisions

Substantial emission reductions have occurred as a result of previous emission trading programs, under both Title IV and CAIR. This has lead to substantial ''banks'' of allowances (*i.e.,* holdings of unused allowances allocated for years before the programs sunset) in each of the CAIR programs. In the proposal, EPA requested comment on whether to allow banked CAIR allowances to be used in the Transport Rule trading programs. EPA recognizes the importance of continuity in emission trading programs as a general principle. However, for the reasons explained below, EPA has decided not to allow banked CAIR allowances to be used in any of the Transport Rule trading programs. (1) SO_2 Allowance Bank

The bank of Title IV allowances was more than 12 million tons at the end of 2009. This bank is the result of emission reductions under the Title IV Acid Rain Program. Under the CAIR SO_2 trading program, EPA allowed banked (as well as future year) Title IV allowances to be used in the CAIR SO_2 trading program—in lieu of being used in the Acid Rain Program—for compliance with the requirement to hold allowances covering SO_2 emissions. This approach encouraged early reductions for the CAIR SO_2 trading program, but was held to be unlawful in *North Carolina.*

In the proposed rule, EPA took comment on whether sources should be allowed to use banked Title IV allowances in the Transport Rule SO_2 program. EPA proposed to not allow the use of Title IV allowances either as the basis for allocating Transport Rule SO_2 allowances or directly for compliance with allowance-holding requirements, in part, because EPA was concerned that those approaches would be perceived as inconsistent with the requirements of CAA section 110(a)(2)(D)(i)(I) as interpreted by the Court in *North Carolina. See* 75 FR 45338–39.

A number of commenters advocated that EPA recognize Title IV allowance holdings in the Transport Rule, either by allowing full or limited carryover of the allowances or by allocating all or a portion of the Transport Rule SO_2 allowances based on Title IV allowance holdings. Other commenters agreed with EPA's assessment that allowing Title IV allowance carryover in the Transport Rule is inconsistent with *North Carolina* and that any linkage of Transport Rule allocations with Title IV allowance holdings would carry unnecessary, significant legal risk. Therefore, for the reasons explained above and in the proposal, EPA has decided not to permit sources to use Title IV allowances for compliance with the Transport Rule SO_2 trading programs.

In addition, unlike CAIR, in the Transport Rule, EPA decided not to base allocation of Transport Rule SO_2 allowances on the specific distribution of existing Title IV allowances. Title IV allowances continue, of course, to be usable for compliance in the Acid Rain Program.[118]

(2) NO_X Allowance Banks

In the proposed rule, EPA estimated that the CAIR ozone-season NO_X bank would contain over 600,000 allowances and the CAIR annual NO_X bank would contain about 720,000 allowances after completion of true-up of allowance holdings and emissions for 2011. EPA considered the alternatives of allowing or not allowing pre-2012 CAIR NO_X allowances and CAIR ozone-season NO_X allowances to be used in the Transport Rule NO_X trading programs.

EPA also described and requested comment on several possible approaches for handling banked pre-2012 CAIR NO_X allowances in the Transport Rule NO_X trading programs and the pros and cons of each (75 FR 45339):

- Allow all such banked CAIR allowances to be brought into the Transport Rule NO_X programs, make the assurance provisions effective starting in 2012, and rely on the assurance provisions to ensure that each state continues to eliminate all of its significant contribution to nonattainment and interference with maintenance;
- Allow only a limited amount of banked pre-2012 CAIR allowances to be brought into the Transport Rule NO_X programs;
- Factor the bank into the calculation of state NO_X budgets by reducing the state NO_X budgets to take account of the banked pre-2012 CAIR allowances; and
- Do not allow the use of any banked pre-2012 CAIR allowances in the Transport Rule NO_X programs.

EPA proposed the last of these approaches and requested comment on all of the described approaches or suggestions on other ways to handle banked pre-2012 CAIR allowances in the Transport Rule NO_X programs.

[117] Although the proposed rule discussed the EPA analysis in the context of considering the treatment of both small EGUs and large non-EGUs from the NO_X Budget Trading Program, the analysis actually addresses, and draws conclusions about emission reductions, emission rates, and allowance allocations concerning only large non-EGUs.

[118] The Title IV allowance bank is expected to be about 14 million tons at the beginning of 2012.

• Many commenters advocated allowing the carryover of CAIR NO_X allowances to the Transport Rule. Reasons given included: preservation of early reduction investments; need for market continuity; increased flexibility during program start up and early years of the programs; preservation of the credibility of, and certainty under, trading approaches; and the lack of a prohibition in *North Carolina* of carryover of CAIR NO_X allowances. Commenters also suggested that surrender ratios be used to limit the amount, and negative effects, of a carryover.

• Many other commenters were against allowing CAIR NO_X allowance carryover into the Transport Rule. Reasons given included: unnecessary, significant legal risk; concerns about the efficacy of the Transport Rule if state budgets are supplemented by a carryover; and differences in the nature of the programs (the NO_X Budget Trading Program, which addressed the 1-hour ozone NAAQS, and the CAIR ozone-season NO_X trading program, which addressed the 1997 8-hour ozone NAAQS and was reversed in *North Carolina*) under which the allowances were banked, and the Transport Rule ozone-season NO_X trading program, which addresses the 1997 8-hour ozone NAAQS.

For the reasons explained below, after evaluating all comments on this issue, EPA decided not to allow the use of CAIR NO_X allowances in the Transport Rule NO_X trading programs. EPA reevaluated the estimated size of the potential carryover (allowances that will remain unused in the CAIR programs at the end of 2011 compliance periods), taking into account 2010 emissions. EPA estimates that more than 440,000 CAIR ozone-season NO_X allowances will remain and that more than 460,000 CAIR annual NO_X allowances will remain at the end of the 2011 compliance periods. EPA considered whether to allow these CAIR ozone-season NO_X and CAIR annual NO_X allowances to be used in the Transport Rule NO_X trading programs. The CAIR ozone-season NO_X allowances expected to remain unused represent nearly three-quarters of aggregate state ozone-season NO_X budgets [119] in a single year under the final Transport Rule. The allowances expected to remain unused in the annual NO_X program represent more than one-third of aggregate state annual NO_X budgets in a single year under the Transport Rule. As discussed in the proposal, if these allowances were carried over in addition to the Transport Rule state budgets, EPA could not be assured that significant contribution to nonattainment or interference with maintenance would be eliminated. EPA therefore rejects any approach under which all banked CAIR NO_X allowances would be added to the Transport Rule trading programs on top of each state's annual NO_X and/or ozone-season NO_X budgets.

In response to public comments, EPA considered whether the Transport Rule trading programs should allow some form of exchange of banked CAIR annual NO_X and ozone-season allowances for new Transport Rule NO_X allowances within each state's annual NO_X and/or ozone-season budgets, respectively. However, EPA believes that this type of approach carries substantial legal and technical problems. First, the state-by-state distribution of CAIR NO_X allowances resulted from the methodology applied by EPA in CAIR of using fuel factors to set the total amounts of allowance allocations in each state (*i.e.*, the state NO_X budgets). The CAIR NO_X allowance banks therefore are—at least in part—the result of this methodology, which was reversed in *North Carolina. See* North Carolina, 531 F.3d at 918–22. Thus, EPA did not use fuel factors in developing the Transport Rule state budgets. However, EPA is concerned that the distribution of some or all Transport Rule NO_X allowances through exchanges of banked CAIR NO_X allowances for Transport Rule NO_X allowances would blur the bright line between the methodology used for setting budgets in the Transport Rule and the methodology used for setting budgets in CAIR that was rejected by the Court. At least to some extent, the parties that were advantaged under EPA's budget-setting methodology in CAIR would continue to have an advantage under the Transport Rule by receiving more Transport Rule NO_X allowances. EPA therefore believes that allowing exchange of banked CAIR NO_X allowances for Transport Rule NO_X allowances carries significant legal risk.

Second, establishing a procedure for exchanging banked CAIR NO_X allowances for Transport Rule NO_X allowances within each state's budget would mean that Transport Rule NO_X allowances could not be allocated until after completion of the process for determining compliance with allowance-holding requirements for 2011 in the CAIR NO_X trading programs. This process cannot begin until after the allowance transfer deadline for the 2011 control periods (*i.e.*, March 1, 2012 for the CAIR annual NO_X program and November 1, 2011 for the CAIR ozone-season NO_X program) and will not likely be completed until mid-2012. At that time, EPA could begin the procedure of implementing, state-by-state, the exchanges of the remaining CAIR NO_X allowance banks held by parties (owners and operators, brokers, and other entities) for some or all of the allowances in the state NO_X budgets for 2012. The portion of each state budget that would be used up by such exchanges would likely vary from state to state. The resulting delay, and uncertainty about the unit-by-unit amounts, of Transport Rule NO_X allowance allocations for 2012 would undermine Transport Rule allowance market liquidity, significantly disrupt planning by owners and operators for compliance with allowance-holding requirements for the 2012 control periods, and likely impose increased compliance costs under the Transport Rule NO_X trading programs or impact the ability to comply with the 2012 limits.

In light of the specific circumstances in this case and the above-described legal and technical problems that would result from a carryover of CAIR NO_X allowances into the Transport Rule trading programs, the final rule does not allow any such carryover. EPA agrees that, as a general principle, it is desirable to provide continuity between sequential regulatory programs involving emission trading and thereby to ensure that allowances in the past program continue to have some value in the new program. Balancing the general desirability of providing program continuity against the potential negative consequences of a carryover in, and the specific circumstances of, this case, EPA concludes that the carryover of banked CAIR NO_X allowances into the Transport Rule trading programs should not be allowed. EPA notes that, in this case, it signaled the possibility that it would take such an approach in order to provide markets with full information and avoid unnecessary disruptions. After CAIR was remanded by the Court in *North Carolina,* 550 F.3d 1176, in December 2008, EPA was concerned about the future status of CAIR NO_X allowances and consequently advised the public—through a statement posted on the EPA Web site in March, 2009—that ''EPA's continued recording of CAIR NO_X allowances does not guarantee or imply that any allowances will continue to be usable for

[119] This analysis is for all states identified to be contributing significantly to nonattainment or interfering with maintenance. When the analysis is conducted using the aggregate state budgets for only those states for which we are finalizing ozone season requirements in this rule, the percentage increases.

compliance after a replacement rule is finalized or that they will continue to have value in the future.'' [120] EPA believes its decision to disallow carryover of banked allowances here reflects the specific factors in this case and should not be treated as setting any precedent for the treatment, in any future trading programs, of any past trading program's banked allowances.

However, EPA notes that, under the CAIR ozone-season NO_X trading program, where unused allowances were carried forward from the preceding NO_X Budget Trading Program, and under the CAIR annual NO_X trading program, where extra allowances (from the compliance supplement pool) were allocated for early reductions made during the NO_X Budget Trading Program, the vast majority of allowance allocation decisions were made by the states administering these programs. Moreover, a number of states did not allocate CAIR allowances to their sources using fuel adjustment factors, whose use the Court rejected in *North Carolina* in connection with EPA's setting of state NO_X emission budgets.

In light of the general desirability of providing continuity between state programs, states may want to address the CAIR NO_X banks when developing, in SIP revisions, the Transport Rule allowance allocations for control periods after 2012. EPA encourages each state that wants to allocate Transport Rule NO_X allowances through SIP revisions to consider using information on the CAIR NO_X allowance banks that will remain after 2011. Any such allowance allocations, of course, must be within the respective state's NO_X trading budget, and must be submitted to EPA within the applicable submission deadlines, established in the final rule for the control periods for which the allocations are made. The Agency intends to contact states concerning the desirability of holding a workshop to discuss issues related to state allowance allocations.

B. Interactions With NO_X SIP Call

The proposed rule explained that states covered by both the NO_X SIP Call and the Transport Rule would be required to comply with the requirements of both rules and that the Transport Rule would not preempt or replace the requirements of the NO_X SIP Call. Most, but not all, NO_X SIP Call states would be included in the Transport Rule. The proposed rule further explained that the Transport Rule ozone-season NO_X trading program would achieve the emission reductions required by the NO_X SIP Call from EGUs serving generators with a nameplate capacity greater than 25 MW and producing electricity for sale in most NO_X SIP Call states. (This would not be the case, of course, for those NO_X SIP Call states not covered by the Transport Rule.)

The NO_X SIP Call states used the NO_X Budget Trading Program to comply with the NO_X SIP Call requirements for EGUs serving a generator with a nameplate capacity greater than 25 MW and large non-EGUs with a maximum rated heat input capacity greater than 250 mmBtu/hour. (In some states, EGUs serving a generator with a nameplate capacity of 25 MW or less were also included in the NO_X Budget Trading Program as a carryover from the Ozone Transport Commission NO_X Budget Trading Program.) EPA stopped administering the NO_X Budget Trading Program under the NO_X SIP Call after the completion of compliance activities related to the 2008 ozone-season control period, and states used other mechanisms to comply with the NO_X SIP Call requirements.

The proposal further explained that, if EPA promulgated a final rule that did not allow the expansion of the Transport Rule to NO_X Budget Trading Program units, any state that allowed these units to participate in the CAIR ozone-season NO_X trading program would need to submit a SIP revision to address the state's NO_X SIP Call requirement for the reductions. The proposal also explained that states in the CAIR ozone-season NO_X trading program or the NO_X Budget Trading Program that would not be in the Transport Rule ozone-season NO_X trading program would need to submit SIP revisions addressing the NO_X SIP Call requirements for any emission reductions (by EGUs and non-EGUs) addressed in the NO_X Budget Trading Program and not addressed in some other way. *See* 75 FR 45340–41.

As discussed elsewhere in this preamble, the final Transport Rule allows states to expand the general applicability provisions of the Transport Rule ozone-season NO_X trading program to include small EGUs, which were included by some states in the NO_X Budget Trading Program, but not for large non-EGUs, which were included in the NO_X Budget Trading Program. This will allow states with NO_X SIP Call obligations to meet those requirements with respect to small EGUs brought into the Transport Rule trading program, but not with regard to large non-EGUs.

With the issuance of the final Transport Rule, NO_X SIP Call requirements remain in place. *See* 40 CFR 51.121. EPA is not changing any of the NO_X SIP Call requirements. The NO_X SIP Call generally requires that states choosing to rely on large EGUs and large non-EGUs for meeting NO_X SIP Call emission reduction requirements must establish a NO_X mass emissions cap on each source and require Part 75, subpart H monitoring. As an alternative to source-by-source NO_X mass emissions caps, a state may impose NO_X emission rate limits on each source and use maximum operating capacity for estimating NO_X mass emissions or may rely on other requirements that the state demonstrates to be equivalent to either the NO_X mass emissions caps or the NO_X emission rate limits that assume maximum capacity. Collectively, the caps or their alternatives cannot exceed the portion of the state budget for those sources. *See* 40 CFR 51.121(f)(2) and (i)(4). EPA will work with states to ensure that NO_X SIP Call obligations continue to be met (*e.g.,* through intrastate cap and trade programs that require the level of reductions on which the state has recently relied).

C. Interactions With Title IV Acid Rain Program

The final rule does not affect any Acid Rain Program requirements. Acid Rain Program requirements are established independently in Title IV of the CAA and are not replaced by the Transport Rule. Title IV sources that are subject to final Transport Rule provisions still need to continue to comply with all Acid Rain provisions. Title IV SO_2 and NO_X requirements continue to apply independently of the Transport Rule provisions. For the reasons explained above, Title IV SO_2 allowances are not allowed to be used in the Transport Rule trading programs. Similarly, Transport Rule SO_2 allowances are not usable in the Acid Rain Program.

The final Transport Rule does not include any opt-in unit provisions in the FIPs and does not allow SIP revisions to include opt-in unit provisions in the Transport Rule trading programs. Consequently, no sources, including those that have opted in to the Acid Rain Program, can opt-in to the Transport Rule trading programs.

There will likely be changes to emissions at some Acid Rain units outside of the Transport Rule area as a result of the transition from CAIR to the Transport Rule. Namely, emissions at some non-Transport Rule Acid Rain

[120] *http://epa.gov/airmarkets/business/cairallowancestatus.html.* EPA posed similar statements in the on-line systems for trading CAIR NO_X allowances. *See* 40 CFR 96.102 and 96.302 (definitions of ''CAIR NO_X Allowance Tracking System'' and ''CAIR NO_X Ozone Season Allowance Tracking System'').

units in the states that border the Transport Rule states may increase because of potential load-shifting from units in Transport Rule states and because of a potential decrease in the Title IV allowance price. There is a discussion of possible emission increases in non-covered states in section VI.C of this preamble.

D. Other State Implementation Plan Requirements

In this final action, EPA has not conducted any technical analysis to determine whether compliance with the Transport Rule would satisfy RACT requirements for EGUs in any nonattainment areas, or Regional Haze BART-related requirements. For that reason, EPA is neither making determinations nor establishing any presumptions that compliance with the Transport Rule satisfies any RACT or BART-related requirements for EGUs. Based on analyses that states conduct on a case-by-case basis, states may be able to conclude that compliance with the Transport Rule for certain EGUs fulfills nonattainment area RACT requirements. EPA intends to undertake a separate analysis to determine if compliance with the Transport Rule would provide sufficient reductions to satisfy BART requirements for EGUs in accordance with Regional Haze Rule requirements for alternative BART compliance options as soon as practicable following promulgation of the Transport Rule.

X. Transport Rule State Implementation Plans

EPA proposed (75 FR 45342) FIPs setting state-specific emission reduction requirements for each upwind state covered by the proposed Transport Rule and with respect to one or more of three air quality standards—the 1997 annual $PM_{2.5}$ NAAQS, the 2006 24-hour $PM_{2.5}$ NAAQS, and the 1997 ozone NAAQS. In CAIR, EPA allowed the states to replace the CAIR FIP with SIPs and provided substantial flexibility. In the proposed Transport Rule, EPA proposed to allow similar flexibility to states for addressing the CAA section 110(a)(2)(D)(i)(I) transport issues through a SIP. EPA proposed to allow a state to submit a SIP for the ozone requirements only, for the $PM_{2.5}$ requirements only, or for both the ozone and the $PM_{2.5}$ requirements with the specific quantity of emission reductions necessary for a state's SIP determined based on the state emission budgets provided in the final Transport Rule.

EPA received comments suggesting that if the proposal's remedy were finalized, EPA should allow states to replace the FIP allowance allocation provisions in the proposed Transport Rule trading programs by state-developed allocation provisions. Commenters referenced the two alternatives provided to states in the CAIR trading programs where: (1) EPA adopted a rule and model trading regulations under which states that adopted, as state SIP trading programs, the model regulations (with only certain limited changes allowed, *e.g.,* in the allocation provisions) could participate in the EPA-administered CAIR trading programs; and (2) EPA adopted a rule allowing states to adopt in SIPs provisions replacing only certain provisions in the CAIR FIPs (*e.g.,* the allocation provisions) and to remain in the CAIR trading programs under the CAIR FIPs. Under both approaches, the covered units in the state participated in the CAIR trading programs, albeit with state-, rather than EPA-, determined allocations. Comments on the Transport Rule proposal supported these two types of approaches for allowing states to replace EPA allocations under the proposed Transport Rule trading programs by state allocations. EPA requested additional comment on this topic in the NODA published January 7, 2011 (76 FR 1109).

Two approaches with associated deadlines were explained in the NODA. Under the first approach, EPA would adopt new provisions, as part of the proposed Transport Rule FIP that would allow a state to submit a SIP (referred as an abbreviated SIP) that would modify specified provisions of the proposed Transport Rule FIP trading programs. Specifically, the abbreviated SIP would substitute state allocation provisions for control periods in years after 2012, applicable to one or more of the proposed Transport Rule FIP trading programs that apply to the state. The NODA explained which specific provisions in the FIP could be replaced. If the state allocation provisions met certain requirements and the abbreviated SIP did not change any other provisions in the respective proposed Transport Rule FIP trading program, then EPA would approve the abbreviated SIP. In the substitute state allocation provisions, the state could allocate allowances to Transport Rule units (whether existing or new units) or other entities (such as renewable energy facilities) or could auction some or all of the allowances. The NODA went on to describe the requirements for EPA approval of an abbreviated SIP (76 FR 1119) including that the total amount of allowances allocated and auctioned each year could not exceed the applicable budget; allocations and auction results would need to be reported to EPA by the permitting authority (usually the state) by particular dates prior to the applicable control period depending on whether allowances were going to existing or new sources; the reported allocations and auction results could not be changed; and no other provisions of the FIP would be changed.

Under the second approach, EPA would adopt a new rule that would provide that, if a state submitted a SIP (referred to as a full SIP) that adopted trading program regulations meeting certain requirements for control periods in years after 2012, then EPA would approve the full SIP as correcting the deficiency under CAA section 110(a)(2)(D)(i)(I) in the state's SIP that was the basis for issuance of the comparable proposed Transport Rule FIP. In the state allocation provisions, the state could allocate allowances to Transport Rule units (whether existing or new units, except for opt-in units) or other entities (such as renewable energy facilities) or could auction allowances. Upon EPA approval of a state's full SIP, the state's SIP-based trading program would be integrated with the comparable FIP-based Transport Rule trading program (whether or not modified by an abbreviated SIP) covering other states. Moreover, covered sources in the state could participate in the integrated trading program, and the allowances issued under the SIP-based state trading program would be interchangeable with the allowances issued in the comparable FIP-based Transport Rule trading program.

The NODA went on to describe the limited changes that states could make under the full SIP option. Only allocation provisions could be modified with the same requirements as for abbreviated SIPs, including, among other things, that the total amount of allowances allocated each year could not exceed the applicable budget and that allocations would need to be reported to EPA by the permitting authority (usually the state) by particular dates prior to the applicable control period depending on whether allowances were going to existing or new sources.

The NODA also discussed the option for states to submit SIPs using emission reduction approaches other than the proposed Transport Rule trading programs to correct the deficiency under CAA section 110(a)(2)(D)(i)(I) in the state's SIP. EPA would review on a case-by-case basis SIPs using such alternative approaches (76 FR 1120).

Suggested deadlines for abbreviated and full SIPs were given in tables in the

NODA (76 FR 1120). These deadlines generally required states to submit SIPs about 2 years ahead of a particular control period for which state allocations would apply in order to give EPA time to review and approve the SIP and record allowances.

Most commenters on the NODA supported state allocation options, within the preferred FIP remedy, that would replace FIP allocations with SIP-based state allocations.

In the final rule, EPA adopts, with some revisions, both of the approaches described in the January 7, 2011 NODA. Under the first approach, a state may submit an abbreviated SIP that modifies a final Transport Rule FIP trading program in only a limited way (*i.e.,* by replacing the allowance allocation provisions in §§ 97.411(a) and (b)(1) and 97.412(a) for the annual NO_X trading program, §§ 97.511(a) and (b)(1) and 97.512(a) for the ozone-season NO_X trading program, §§ 97.611(a) and (b)(1) and 97.612(a) for the SO_2 Group 1 trading program, and §§ 97.711(a) and (b)(1) and 97.712(a) for the SO_2 Group 2 trading program). In the state's replacement provisions, the state may allocate allowances to Transport Rule units (whether existing or new units) [121] or other entities (such as renewable energy facilities) or may auction allowances. Additionally, state SIPs can address one or all of the pollutants addressed by the FIPs. For $PM_{2.5}$, EPA is finalizing the flexibility for a state SIP to address either SO_2 or NO_X, or both. Further, if a state is required to make ozone-season and annual NO_X reductions, the SIP could address either ozone-season or annual NO_X emissions, or both. In other words, states can replace provisions in all FIPs that apply or some subset of the FIPs that apply to a particular state, and leave in place the FIPs for the requirements not addressed by a SIP.

Further, EPA will approve the abbreviated SIP only if the state replacement for the Transport Rule FIP allocation provisions meets certain requirements and the abbreviated SIP does not change any other provisions in the Transport Rule FIP trading program. For EPA approval, the state allocation and, where applicable, auction provisions (and any accompanying definitions of terms applying only to terms as used in these provisions) must meet the following requirements. First, the provisions must provide that, for each year for which the state allocation and, where applicable, auction provisions will apply, the total amount of control period (annual or ozone-season) allowances allocated and, where applicable, auctioned in accordance with these provisions cannot exceed the applicable state budget (less any applicable Indian country new unit set-aside, which will continue to be administered by EPA) for that year under the relevant Transport Rule FIP trading program.

Second, to the extent the state provisions provide for allocations for, or auctions open to, existing units, the provisions must require that the state or the permitting authority under title V of the CAA for the state submit to the Administrator final allocations and, if any auction is to be held, final auction results in accordance with a schedule of deadlines discussed below. To the extent the provisions provide for allocations for or auctions open to new units or any other entities, the provisions must require that the permitting authority submit to the Administrator final allocations and, if applicable, auction results by July 1 of the year of the control period for which the allowances will be distributed. The allocation and auction results must be final and cannot be subject to modification (*e.g.,* through an allowance surrender adjusting the allocation or auction results).

As noted above, the state's submission to the Administrator of allocations or auction results with regard to existing units must meet a specified schedule of deadlines. These submission deadlines reflect, and are necessarily coordinated with, the deadlines for recordation by the Administrator of allowance allocations and any auction results under the Transport Rule trading programs. The recordation deadlines, which are discussed in detail in section XI of this preamble, provide that the Administrator must record existing-unit allowance allocations and auction results by: July 1, 2013 for the applicable control periods in 2014 and 2015; July 1, 2014 for the applicable control periods in 2016 and 2017; July 1, 2015 for the applicable control periods in 2018 and 2019; and July 1, 2016 and July 1 of each year thereafter for the control period in the fourth year after the year of the applicable recordation deadline. In order to provide the Administrator 1 month to review the submissions of allocations and auction results to ensure that the submissions include sufficient information (*e.g.,* the correct identification for each unit involved) to record correctly the submitted allocations and auction results, the state or permitting authority must make these submissions to the Administrator by: June 1, 2013 for the applicable control periods in 2014 and 2015; June 1, 2014 for the applicable control periods in 2016 and 2017; June 1, 2015 for the applicable control periods in 2018 and 2019; and June 1, 2016 and June 1 of each year thereafter for the applicable control period in the fourth year after the year of the applicable submission deadline.

Under the second approach, a state may submit a full SIP adopting a Transport Rule trading program that differs from the comparable Transport Rule FIP trading program only with regard to limited provisions of the FIP trading program. First, the full SIP may include new allocation or auction provisions instead of the Transport Rule FIP allowance allocation provisions other than those concerning the Indian country new unit set-aside. In the state allocation or auction provisions, the state may allocate allowances to Transport Rule units (whether existing or new units) or other entities (such as renewable energy facilities) or may auction allowances. EPA will approve the full SIP only if the state allocation or auction provisions (and any accompanying definitions of terms applying only to terms as used in these provisions) meet certain requirements. Second, the full SIP may substitute the name of the state for the term ''State'' as used in the FIP trading program provisions, provided that EPA determines that the substitutions are not substantive changes. Third, as discussed in more detail below, all references to units in Indian country, as used in the FIP trading program provisions, must be removed, and the full SIP cannot impose any requirements on units in Indian country within the borders of the state and may not include the Indian country set-aside provisions. Other than these allowed changes, all other provisions in the Transport Rule trading program in the full SIP must be the same as those in the Transport Rule FIP trading program with regard to non-Indian country units. For EPA approval, the state allocation provisions must meet the same requirements, as discussed above, that state allocation or auction provisions in an abbreviated SIP must meet.

A Transport Rule trading program adopted by a state in a full SIP, and approved by EPA, under the second approach will be fully integrated with the comparable Transport Rule FIP trading program (*i.e.,* the ''TR NO_X Annual Trading Program'', ''TR NO_X Ozone Season Trading Program'', ''TR SO_2 Group 1 Trading Program'', or ''TR SO_2 Group 2 Trading Program''

[121] EPA is not finalizing opt-in provisions, so the reference to federal-only opt-in allocations in the NODA has been removed.

respectively) for other states. This will apply whether the comparable Transport Rule FIP program for other states was modified by an abbreviated SIP approved by EPA under the first approach or was not modified by such an abbreviated SIP. The integration of these three types of trading programs will be accomplished primarily through the definitions of the terms, ''TR NO_X Annual allowance'', ''TR NO_X Ozone Season allowance'', ''TR SO_2 Group 1 allowance'', and ''TR SO_2 Group 2 allowance'' in the full SIPs approved by EPA and the TR FIP trading programs (whether or not the programs were modified by abbreviated SIPs). ''TR NO_X Annual allowance'' will be defined in the state and Transport Rule FIP trading programs as including allowances issued under any of the following trading programs: The comparable EPA-approved state Transport Rule trading programs; the comparable Transport Rule FIP trading programs with EPA-approved state allocation and auction provisions; and the Transport Rule FIP trading programs with EPA allocation provisions. Similarly, the definitions in the state and Transport Rule FIP trading programs of ''TR NO_X Ozone Season allowance'', ''TR SO_2 Group 1 allowance'', and ''TR SO_2 Group 2 allowance'' respectively will include allowances issued under all three types of trading programs. As a result, allowances issued in one approved state Transport Rule trading program will be interchangeable with allowances issued in the comparable Transport Rule FIP trading program (whether or not modified by an abbreviated SIP), and all these allowances will be available for use for compliance with the allowance-holding requirements (to cover emissions and to meet assurance provision requirements) in all three types of trading programs.

The integration of state and the proposed Transport Rule FIP trading programs will also be reflected in the definitions of ''TR NO_X Annual Trading Program,'' ''TR NO_X Ozone Season Trading Program'', ''TR SO_2 Group 1 Trading Program'', and ''TR SO_2 Group 2 Trading Program''. Each of these definitions in the state Transport Rule and Transport Rule FIP trading programs will expressly encompass the comparable Transport Rule FIP trading programs (whether or not modified by an abbreviated SIP) and the comparable EPA-approved state full SIP trading program.

The final rule also sets deadlines for the submission of complete abbreviated and full SIPs. These deadlines are based on the first year for which the state wants to allocate or auction allowances, reflect the above-discussed deadlines for the Administrator's recordation of allocations and auction results, and build in a 6-month period for EPA review, provision of notice and opportunity for public comment, and approval of the SIP revisions. This 6-month period is built into the final rule's SIP submission deadlines because that is the period EPA found was needed for reviewing, providing notice and comment for, and approving state trading program provisions in abbreviated and full SIPs under CAIR. As a result, the final rule requires that complete abbreviated and full SIPs must be submitted to the Administrator by: December 1, 2012 in order to govern allowance allocation and auction for control periods in 2014 and 2015; December 1, 2013 in order to govern control periods in 2016 and 2017; December 1, 2014 in order to govern allowance allocation and auction for control periods in 2018 and 2019; and December 1, 2015 and by December 1 of any year thereafter in order to govern allowance allocation and auction for control periods in the fifth year after such submission deadline.

EPA notes that, in cases where a state that has Indian country within its borders submits, and EPA approves, a full SIP, the comparable FIP will not be entirely replaced. In such cases, the FIP will continue to be in place with regard to the Transport Rule trading program provisions that concern units in Indian country, and the full SIP will encompass all other provisions of the trading program. Specifically, to the extent Transport Rule trading program provisions reference and apply to Indian country units (including, for example, references in the applicability provisions and the Indian country new unit set-aside provisions), those provisions, as they apply to Indian country units, will remain in the FIP. The full SIP will include those provisions only as they apply to non-Indian country units.

As a practical matter, this means that the Indian country new unit set-aside provisions, which apply exclusively to Indian country new units, will remain entirely in the FIP. Further, other trading program provisions that reference both non-Indian country units and Indian country units (such as the applicability provisions) will remain in the FIP to the extent of their application to Indian country units and will be included in the full SIP to the extent of their application to non-Indian country units.

However, EPA notes that the assurance provisions in each Transport Rule trading program require calculations using the entire state budget, including any portion of the budget that may be allocated to Indian country new units. Further, EPA notes that currently no new units are planned or anticipated to be located in Indian country. Under these circumstances, EPA will handle the assurance provisions as follows. The full SIP for a state having Indian country will initially include the assurance provisions, as set forth in the FIP, except with removal of any references to sources and units in Indian country. The FIP will initially not include the assurance provisions, which will be fully effective and enforceable under the full SIP. In the event that any new unit is located in Indian country in the state, EPA intends to modify its approval of the full SIP to take back the assurance provisions in order to apply, in the FIP, the assurance provisions to both Indian country and non-Indian country units.

This final rule not only allows a state to choose to submit an abbreviated or a full SIP; it also allows a state to choose to submit either form of SIP to replace any or all of the FIPs in this rule as they apply to a particular state. By promulgating these Transport Rule FIPs, EPA in no way affects the right of a state to submit, for review and approval, a SIP that replaces the federal requirements of the FIP with state requirements that do not involve state participation in the Transport Rule trading programs. In order to replace the FIP in a state, the state's SIP taking an approach other than participation in Transport Rule trading programs must provide adequate provisions to prohibit NO_X and SO_2 emissions that are determined in the Transport Rule to contribute significantly to nonattainment or interfere with maintenance in another state or states. EPA will review such a SIP on a case-by-case basis. The Transport Rule FIPs remain fully in place in each covered state until a state's SIP is submitted and approved by EPA to revise or replace a FIP.

In response to numerous comments urging EPA to allow states to determine allowance allocations as soon as possible, EPA has developed a SIP revision procedure that applies to 2013 allowance allocations only. In developing this procedure, EPA is balancing the desire to allow states the flexibility to tailor allowance allocations to the specific needs and situations in a particular state with the need to provide certainty to source owners and operators by having allowances recorded sufficiently ahead of the control period for which the allocations are made in order to facilitate owners'

and operators' efforts to optimize their compliance strategies. This final rule allows states to make 2013 allowance allocations through the use of a SIP revision that is narrower in scope than the other SIP revisions states can use to replace the FIPs and/or to make allocation decisions for 2014 and beyond. For 2013 allocations, the scope of the SIP revision is limited to allocations made to units that commence commercial operation before January 1, 2010 and provided in the form of a list of those units and their corresponding allocations for 2013. Additionally, this particular SIP revision may allocate only the portions of the state budgets set forth in Tables X–1 through X–3, *i.e.*, each state budget minus the new unit set-aside and the Indian country new unit set-aside.

In developing this procedure, EPA set deadlines for submissions of the SIP revisions for 2013 allocations and for recordation of the allocations that balanced the need to record allowances sufficiently ahead of the control period with the desire to allow state flexibility for 2013. EPA set deadlines that will allow sufficient time for EPA to review and approve these SIP revisions, taking into account that EPA approval must be final and effective before the 2013 allocations can be recorded and the allowances are available for trading. In order to ensure that EPA review and approval (which must include public notice and opportunity for comment) can be completed in time, the final rule necessarily limits the allowed scope of the SIP revisions for 2013 allocations, as set forth in the requirements discussed below, and thereby limits the issues that must be considered and addressed in the review and approval process. Further, the final rule prescribes the form in which the state allocations for 2013 must be provided to EPA in order to facilitate rapid recordation of the allocations upon their approval.

States, along with their sources, will need to weigh the trade-offs of a relatively short period of recording before the control period for which the allocation is made (about 6 months) with the desire to have state allocations in 2013, when deciding whether to pursue a SIP revision for 2013 allocations. States may choose to submit a SIP revision for one or more of the trading programs. In other words, state allocations for 2013 could apply in one trading program while 2013 FIP allocations apply in another.

States can make 2013 allowance allocations provided the state meets certain requirements.

- By the date 70 days after publication of the final rule in the **Federal Register**, a state must provide notification to EPA if the state intends to submit state allocations for 2013. The notification must be in a format prescribed by the Administrator and submitted electronically.
- By April 1, 2012, the state must submit a SIP revision to EPA that:
  - Allocates to existing units [122] only, provides a list of the units and their state allocations to EPA electronically and in a format prescribed by EPA, and does not provide for any change in the units and allocations on the list and in any allocation previously determined and recorded by the Administrator;
  - Allocates a total amount of allowances for 2013 that does not exceed the applicable amount in Tables X–1 through X–3 for each trading program that applies in that particular state; and
  - Provides for no set-asides and does not alter the new unit set-asides, the Indian country new unit set-asides, and any aspect of the FIP rules other than the existing-unit allocations for 2013.

If EPA does not receive notification from a state by the date 70 days after publication of the final rule in the **Federal Register**, EPA will record FIP allocations for 2012 and 2013 as scheduled (by the date 90 days after publication of the final rule). If EPA receives timely notification from a state, EPA will record FIP allocations for 2012 only and wait to record 2013 allocations. If the state provides a timely (not later than April 1, 2012) SIP revision meeting all the above-described requirements and EPA approves the SIP revision by October 1, 2012, EPA will record state-determined allocations for 2013 by October 1, 2012. Otherwise, EPA will record the EPA-determined allocations for 2013.

BILLING CODE 6560–50–P

[122] Existing unit means a unit that commenced commercial operation before January 1, 2010.

Table X-1 Portion of the Annual NO_X Trading Budget Available for State Allocation in 2013

State	Portion of the NO_X Annual Trading Budget Available for State Allocation in 2013
Alabama	71,237
Georgia	60,770
Illinois	44,042
Indiana	106,434
Iowa	37,568
Kansas	30,100
Kentucky	81,683
Maryland	16,300
Michigan	58,989
Minnesota	28,981
Missouri	50,803
Nebraska	24,589
New Jersey	7,121
New York	17,017
North Carolina	47,552
Ohio	90,849
Pennsylvania	117,586
South Carolina	31,848
Tennessee	34,989
Texas	129,587
Virginia	31,580
West Virginia	56,498
Wisconsin	29,730

Table X-2 Portion of the Ozone-Season NO_X Trading Budget Available for State Allocation in 2013

State	Portion of the Ozone Season NO_X Trading Budget Available for State Allocation in 2013
Alabama	31,111
Arkansas	14,736
Florida	27,268
Georgia	27,385
Illinois	19,511
Indiana	45,470
Kentucky	34,720
Louisiana	13,029
Maryland	7,035
Mississippi	9,957
New Jersey	3,314
New York	8,081
North Carolina	20,838
Ohio	39,262
Pennsylvania	51,157
South Carolina	13,631
Tennessee	14,610
Texas	61,152
Virginia	13,729
West Virginia	24,019

Table X-3 Portion of the SO_2 Group 1 or Group 2 Trading Budget Available for State Allocation in 2013

State	Portion of the SO_2 Group 1 or Group 2 Trading Budget Available for State Allocation in 2013
Alabama	211,712
Georgia	155,356
Illinois	223,145
Indiana	276,861
Iowa	104,943
Kansas	40,697
Kentucky	218,702
Maryland	29,518
Michigan	224,717
Minnesota	41,141
Missouri	203,317
Nebraska	62,450
New Jersey	5,463
New York	26,778
North Carolina	125,931
Ohio	304,025
Pennsylvania	273,078
South Carolina	86,848
Tennessee	145,187
Texas	231,756
Virginia	67,987
West Virginia	135,942
Wisconsin	75,506

BILLING CODE 6560–50–C

EPA will work with states that wish to submit full SIPs or abbreviated SIPs to ensure a smooth integration with the relevant Transport Rule trading programs. The Agency intends to provide information and tools to assist states in their rulemaking efforts, including electronic versions of the Transport Rule trading rules and EPA will work with states that wish to submit full SIPs or abbreviated SIPs to ensure a smooth integration with the relevant Transport Rule trading programs. The Agency intends to provide information and tools to assist states in their rulemaking efforts, including electronic versions of the Transport Rule trading rules and other products states feel may be helpful. States that submit approvable full SIPs or abbreviated SIPs to implement one or all of the Transport Rule trading programs are not required to include an additional technical demonstration relating to elimination of emissions that contribute significantly to nonattainment or contribute to maintenance in downwind areas.

XI. Structure and Key Elements of Transport Rule Air Quality-Assured Trading Program Rules

In order to make the final FIP trading program rules as simple and consistent as possible, EPA designed them so that the final rules (like the proposed rules) for each of the trading programs (*i.e.,* the ''TR NO_X Annual Trading Program'', ''TR NO_X Ozone Season Trading Program'', ''TR SO_2 Group 1 Trading Program'', and ''TR SO_2 Group 2 Trading Program'') are parallel in structure and contain the same basic elements. For example, the rules for the Transport Rule annual NO_X, ozone-season NO_X, SO_2 Group 1, and SO_2 Group 2 trading programs are located, respectively, in subparts AAAAA (§§ 97.401, *et seq.*), BBBBB (§§ 97.501, *et seq.*), CCCCC (§§ 97.601, *et seq.*), and DDDDD (§§ 97.701, *et seq.*) of Part 97 in Title 40 of the Code of Federal Regulations. Moreover, the order of the specific provisions for each trading program is the same, and the provisions have parallel numbering. The key elements of the final Transport Rule trading program rules are as follows.

(1) General Provisions

(i) §§ 97.402 and 97.403, 97.502 and 97.503, 97.602 and 97.603, and 97.702 and 97.703—Definitions and Abbreviations

Most of the definitions in the final Transport Rule trading program rules are essentially the same as in the proposed rules and for each of the Transport Rule trading programs (except where necessary to reflect the different pollutants (NO_X and SO_2), control periods (for annual and ozone-season NO_X, and for annual SO_2), and geographic coverage involved in the trading programs). Moreover, many of the definitions in the final rules that are essentially the same as in the proposed rule are also essentially the same as in prior EPA-administered trading programs. However, as discussed in more detail below, some of the definitions in the final rules clarify, or differ from, the definitions in the proposed rule.

As noted, several definitions in the final rules are essentially the same as those both in the proposed rules and in prior EPA-administered trading programs. Examples include the definitions of ''source,'' ''allowance transfer deadline,'' ''owner,'' ''operator'', ''Allowance Management System'' (used instead of the term ''Allowance Tracking System''), and ''continuous emission monitoring system.''

One example of a definition in the final rules that is the same as in the proposed rule, but that clarifies the definition used in prior trading programs is the definition of ''fossil fuel.'' In the final rule, the term ''fossil fuel'' is defined in general as including natural gas, petroleum, coal, or any form of fuel derived from such material, regardless of the purpose for which such material is derived. For example, with regard to consumer products that are made of materials derived from natural gas, petroleum, or coal, are used by consumers, and then are used as fuel, these materials in the consumer products qualify as fossil fuel. The definition in the final rules also includes language establishing a narrower meaning of ''fossil fuel'' that is not generally applicable, but rather is applicable only for purposes of applying the limitation on fossil-fuel use under the solid waste incineration unit exemption (which is discussed elsewhere in this preamble). This latter portion of the ''fossil fuel'' definition makes explicit an interpretation that EPA adopted in CAIR that—solely for purposes of applying the fossil-fuel use limitation in that exemption—the term ''fossil fuel'' is limited to natural gas, petroleum, coal, or any form of fuel derived from such material ''for the purpose of creating useful heat.'' For example, applying this narrower meaning, consumer products made from natural gas, petroleum, or coal are not fossil fuel, for purposes of determining qualification under the fossil-fuel use limitation, because the products (*e.g.*, tires) were derived from natural gas, petroleum, or coal in order to meet certain consumer needs (*e.g.*, to meet transportation needs), not in order to create fuel (*i.e.*, material that would be combusted to produce useful heat).

As noted above, some of definitions in the final rules clarify definitions in the proposed rules. The definitions of ''allowable NO_X emission rate'' and ''allowable SO_2 emission rate'' are clarified by explaining that such a rate is the most stringent state or federal emission rate limitation, expressed in lb/MWhr or, if originally expressed in lb/mmBtu, converted to lb/MWhr by multiplying it by the unit's heat rate in mmBtu/MWhr. This clarification ensures consistency from unit to unit in determining a unit's allowable rate.

By further example, while the proposed rules used the same definition of ''commence commercial operation'' as in prior EPA-administered trading programs, the final rules clarify the definition. Under the definition in the proposed rules, a unit that is physically changed is treated as the same unit. However, the proposed rules were unclear about the treatment of a unit that is replaced and whether moving a unit to a different location or source constitutes a physical change. The definition of ''commence commercial operation'' in the final rules clarifies that a unit that is physically changed (which includes a unit that is replaced) continues to be treated, for purposes of this final rule, as the same unit with the same commence-commercial-operation date. The definition also clarifies that moving a unit to a different location or source is treated the same as a physical change, and so the unit continues to be treated as the same unit. The definition also clarifies that a unit (the replaced unit) that is replaced, whether at the same source or a different source, is treated as the same unit, while the unit (the replacement unit) that replaces the unit is treated as a separate unit with a new commence-commercial-operation date. (The definition of ''commence operation'' is removed in the final rules because they do not use this term.)

By further example, while the proposed rules used the same definition of ''unit'' as in prior EPA-administered trading programs, the final rules clarify the definition. The ''unit'' definition is clarified by expanding it to incorporate explicitly the concepts—set forth in the definition in the final rules of ''commence commercial operation'' and thus already applicable to all units—that a unit that is physically changed, moved to a different location or source, or replaced at the same or a different source continues to be treated as the same unit and that a replacement unit at the same source is treated as a separate unit. EPA believes that it is preferable to provide a comprehensive definition of ''unit'' in one place because the term is used so frequently in the final rules.

By further example, the definition of ''nameplate capacity'' is clarified in the final rules by explaining that it is expressed in MWe rounded to the nearest tenth. This is the same rounding convention that is used in the reporting of nameplate capacity to the Energy Information Administration.

As noted above, some of the definitions in the final rules are similar to those in the proposed rules but have some substantive differences. For example, in the proposed rules, the definitions of ''cogeneration unit'' and ''fossil-fuel-fired'' are similar to those in prior trading programs but with changes to minimize the need for data concerning individual units or combustion devices for periods before 1990. In order to qualify as fossil-fuel-fired, a unit would have to combust any amount of fossil fuel in 1990 or thereafter. In order to qualify as a cogeneration unit, a unit would have to meet certain efficiency and operating standards during the later of: the 12-month period starting when the unit begins producing electricity, or 1990. For a topping-cycle unit, useful power plus one-half of useful thermal energy output of the unit must equal no less than a certain percentage of the total energy input and useful thermal energy must be no less than a certain percentage of total energy output, and, for a bottoming-cycle unit, useful power must be no less than a certain percentage of total energy input. EPA proposed to limit to 1990 or later the historical period for which information on fuel consumption and on cogeneration unit efficiency and operations would be required to apply the ''fossil-fuel-fired'' and ''cogeneration unit'' definitions. This limitation was proposed because EPA was concerned that some owners and operators could have difficulty obtaining pre-1990 information about older units, particularly for units whose ownership has changed over time.

While EPA proposed to use 1990 as the earliest year for which information

would be required under these definitions, EPA requested comment on whether a more recent year should be used. As discussed elsewhere in this preamble, the final rules use 2005 (about 5 years before this rule's promulgation), rather than 1990, as the reference year. Further, because the language describing the historical time period used (including the reference year), appeared in the proposal both in the ''cogeneration unit'' definition and the provisions concerning cogeneration units in the applicability provisions, the final rules removed any language about the historical time period from the ''cogeneration unit'' definition and revised the language in the applicability provisions to use the 2005 reference year for the requirements for meeting the exemption for cogeneration units from the Transport Rule trading programs. Further, consistent with this use of 2005 as the reference year, the ''fossil-fuel-fired'' definition in the final rule specifically references 2005, rather than 1990, and as discussed elsewhere in this preamble, the final rules also use January 1, 2005 (rather than November 15, 1990) as the reference date throughout the applicability provisions.

With this change in the reference date for the requirement to meet the operating and efficiency standards under the ''cogeneration unit'' definition, a unit would have to meet these standards throughout the later of 2005 or the 12-month period starting when the unit begins producing electricity and continuing thereafter. EPA requested comment on whether these standards should be applied to a calendar year when the unit involved did not combust any fuel, *i.e.,* did not operate at all. As discussed elsewhere in this preamble, the final rules expressly provide that the operating and efficiency standards do not have to be met for a calendar year throughout which a unit did not operate at all.

In addition, under the proposed rules, if a group of cogeneration units operating as an integrated cogeneration system met the efficiency standards, a topping-cycle unit in that system would be deemed to meet those standards. EPA requested comment on whether this provision should also apply to a bottoming-cycle unit. As discussed elsewhere in this preamble, this provision in the final rules is not limited to topping-cycle units.

By further example of definitions in the final rules that have substantive differences from the definitions in the proposed rules, the proposed definitions of ''TR NO_X Annual allowance,'' ''TR NO_X Ozone Season allowance,'' ''TR SO_2 Group 1 allowance,'' ''TR SO_2 Group 1 allowance,'' ''TR NO_X Annual Trading Program,'' ''TR NO_X Ozone Season Trading Program,'' ''TR SO_2 Group 1 Trading Program,'' and ''TR SO_2 Group 1 Trading Program'' are changed in the final rules. Language is added to the definitions in order to reference comparable allowances and trading programs established through SIP revisions submitted by states and approved by the Administrator. As discussed elsewhere in this preamble, the final Transport Rule provides that, if a state submits SIP revisions meeting certain specified requirements, the state or permitting authority (rather than the Administrator) will allocate allowances, and the covered sources in the state will participate—along with covered sources in states remaining subject to the Transport Rule FIPs—in an integrated, region-wide air quality-assured trading program under which both any allowance allocated by the Administrator and any allowance allocated by the state or permitting authority will each authorize one ton of emissions of the relevant pollutant and will be usable by any source for compliance with the requirement to hold allowances covering emissions.

As noted above, the final rules include some definitions that were not used in prior EPA-administered trading programs and that reflect unique provisions of the Transport Rule trading programs. For example, the terms, ''assurance account,'' ''TR NO_X Annual unit,'' ''TR NO_X Ozone Season unit,'' ''TR SO_2 Group 1 unit,'' ''TR SO_2 Group 2 unit,'' ''common designated representative,'' ''common designated representative's assurance level,'' and ''common designated representative's share'' are used and defined in the final rule.

While the proposed rules included definitions for the terms, ''owner's assurance level'' and ''owner's share,'' the final rules replace these terms and instead define the terms, ''common designated representative,'' ''common designated representative's assurance level,'' and ''common designated representative's share.'' This is because, as discussed elsewhere in this preamble, the final rules include assurance provisions similar to those in the proposed rules but that are implemented based on groups of units having a common designated representative, instead of being implemented on an owner-by-owner basis. The definition of ''common designated representative'' in the final rules reflects that the determination of what groups of units and sources in a State have a common designated representative is made based on the identity of units' and sources' designated representatives as of April 1 of the year after the year of the control period when a state triggers the assurance provisions. EPA believes that the use of this reference date will give owners and operators greater flexibility to select common designated representatives after information about total state control period emissions is available and after the allowance transfer deadline when owners and operators may prefer to have a designated representative for their specific source (rather than a common designated representative for a larger group) who is focused on ensuring that sufficient allowances are held in or transferred to the source's account to cover the sources' emissions. EPA notes that the definition of ''common designated representative's share'' is simpler than the definition of ''owner's share'' because implementing the assurance provisions at the designated representative level means it is no longer necessary to address, in the definition, owner- and unit-level issues that may arise when a unit has multiple owners or where two or more units emit through the same stack.

Finally, some definitions are added to the final rules that are not in the proposed rules. For example, because the term, ''business day,'' was used, but not defined, in the proposed rule, its meaning was unclear. Specifically, it was unclear whether a day that was uniquely a state holiday, and not a federal holiday, was a business day for purposes of the federally administered Transport Rule trading programs, *e.g.,* whether the allowance transfer deadline applicable to all sources in all states in a Transport Rule trading program could fall on a day that was a unique state holiday in one or a few states or whether the allowance transfer deadline would be advanced to the next business day for all sources in all states or perhaps only for sources in the state with the state holiday. EPA believes that, for a federally administered trading program covering sources in multiple states, the deadlines should be clear and uniform for all sources, regardless of the state in which the sources are located, and should not be affected by unique state holidays of which owners and operators of sources in other states may not even be aware. Consequently, the ''business day'' definition is added in the final rules and means a day that does not fall on a weekend or a federal holiday.

By further example, a definition for ''natural gas'' was added in the final rules. That definition, as well as the definition for ''coal,'' incorporate the

corresponding definitions in Part 72 of the Acid Rain Program regulations. The Part 72 definitions are incorporated because they are also used in the Part 75 monitoring, reporting, and recordkeeping provisions, which provisions are already incorporated in the final Transport Rule Trading Program rules. (ii) §§ 97.404 and 97.405, 97.504 and 97.505, 97.604 and 97.605, and 97.704 and 97.705—Applicability and Retired Units

The applicability provisions in the final rules are, except as discussed herein, essentially the same as in the proposed rules and for each of the Transport Rule trading programs. Of course, for each trading program, the definition of ''State'' reflects differences in the specific states whose electric generating units are covered by the respective trading program.

Under the general applicability provisions of the proposed rules, the Transport Rule trading programs would cover fossil-fuel-fired boilers and combustion turbines serving—at any time starting November 15, 1990 or later—an electrical generator with a nameplate capacity exceeding 25 MWe and producing power for sale, with the exception of certain cogeneration units and solid waste incineration units. As discussed elsewhere in this preamble, the general applicability provisions in the final rules reference January 1, 2005 (about 5 years before this rule's promulgation), rather than November 15, 1990.

Cogeneration unit exemption. Under the final rules (as well as the proposed rules) certain cogeneration units or solid waste incinerators otherwise covered by the general category of covered units are exempt from the FIP requirements. In particular, the final rules include an exemption for a unit that qualifies as a cogeneration unit throughout the later of 2005 or the first 12 months during which the unit first produces electricity and continues to qualify throughout each calendar year ending after the later of 2005 or such 12-month period and that meets the limitation on electricity sales to the grid. In order to qualify as a cogeneration unit (*i.e.,* meet the definition of ''cogeneration unit'') in the final rules, a unit (*i.e.,* a boiler or combustion turbine) must operate as part of a ''cogeneration system,'' which is defined as an integrated group of equipment at a source (including a boiler or combustion turbine, and a steam turbine generator) designed to produce useful thermal energy for industrial, commercial, heating, or cooling purposes and electricity through the sequential use of energy. In addition, in order to qualify, a unit must be a topping-cycle unit or a bottoming cycle unit because units that produce useful thermal energy and useful power through sequential use of energy either produce useful power first (*i.e.,* are topping-cycle units) or produce thermal energy first (*i.e.,* are bottom-cycle units).

Further, in order to qualify as a cogeneration unit, a unit also must meet, on a 12-month or annual basis, the above described efficiency and operating standards. As discussed elsewhere in this preamble, EPA clarifies that the electricity sales limitation under the exemption is applied in the same way whether a unit serves only one generator or serves more than one generator. In both cases, the total amount of electricity produced annually by a unit and sold to the grid cannot exceed the greater of one-third of the unit's potential electric output capacity or 219,000 MWhr.

The final rules also clarify when a unit that meets the requirements for the cogeneration unit exemption and subsequently fails to meet all these requirements loses the exemption and becomes a covered unit. Such a unit loses the exemption starting the earlier of January 1 (or May 1 for the NO_X ozone season trading program) after the first year during which the unit no longer meets the ''cogeneration unit'' definition or January 1 (or May 1) of the first year during which the unit no longer meets the electricity sales limitation.

Solid waste incineration unit exemption. The final rules also include an exemption for a unit that qualifies as a solid waste incineration unit during the later of 2005 or the first 12 months during which the unit first produces electricity, that continues to qualify throughout each calendar year ending after the later of 2005 or such 12-month period, and that meets the limitation on fossil-fuel use. In contrast, the exemption for solid waste incineration units in the proposed rules distinguished between units commencing operation before January 1, 1985 and those commencing operation on or after that date and established somewhat different criteria for these two categories of units. As discussed elsewhere in this preamble, the final rules remove the distinction based on whether a solid waste incineration unit commences operation before January 1, 1985 or on or after January 1, 1985. In order to be exempt, the unit must qualify as a solid waste incineration units during the later of 2005 or the first 12 months during which the unit first produces electricity, must continue to qualify throughout each calendar year ending after the later of 2005 or such 12-month period, and must meet the limitation on fossil-fuel use on a three-year average basis during the first 3 years of operation starting no earlier than 2005 and every 3 years of operation thereafter.

Retired unit exemption. The final rule provisions exempting permanently retired units from most of the requirements of the Transport Rule trading programs are essentially the same as in the proposed rules and for each of the Transport Rule trading programs. The retired unit provisions exempt these units from the requirements for emission monitoring, recordkeeping, and reporting and for holding allowances, as of the allowance transfer deadline, sufficient to cover their emissions. However, the permanently retired units in a state must be included in determining whether owners and operators must surrender allowances, and, if so, how many, to comply with the assurance provisions (which are discussed elsewhere in this preamble) if the state's total covered-unit emissions exceed the state assurance level.

Specifically, a common designated representative must include these units in determining whether his or her share of total emissions of covered units in a state exceed his or her share (generally based on the allowances allocated to the units that he or she represents) of the state trading budget with the variability limit and thus whether the owners and operators of the units that he or she represents have to surrender allowances under the assurance provisions.

(iii) §§ 97.406, 97.506, 97.606, and 97.706—Standard Requirements

The basic requirements applicable to owners and operators of units and sources covered by the Transport Rule trading programs and presented as standard requirements in the final rules are, except as discussed herein, essentially the same as in proposed rules and for each of the Transport Rule trading programs. These basic requirements include: designated representative requirements; emissions monitoring, reporting, and recordkeeping requirements; emissions requirements comprising emissions limitations and assurance provisions; permit requirements; additional recordkeeping and reporting requirements; liability provisions; and provisions describing the effect of the Transport Rule trading program requirements on other CAA provisions.

In particular, the paragraphs addressing emissions requirements for owners and operators describe these requirements in detail and reference

other sections of the final rules that set forth the procedures for determining compliance with the emissions limitations and assurance provisions. The paragraphs in the final rules concerning compliance with the emissions limitations clarify that owners and operators of a source and each covered unit at the source must hold allowances at least equaling the total control period emissions of all covered units at the source. Further, the paragraphs in the final rules concerning compliance with the assurance provisions differ from those in the proposed rules in that, as discussed elsewhere in this preamble, the final rules implement the assurance provisions based on groups of units with a common designated representative, instead of being implemented on an owner-by-owner basis, as proposed. Under the final rules, the assurance provisions are triggered when total control period emissions by covered units in a state (starting in 2012) exceed the state trading budget plus variability limit. If the assurance provisions are triggered for a state for a control period in a given year, owners' and operators' responsibility for the resulting penalty (*i.e.,* the surrender of allowances for deduction through the transfer of such allowances to the assurance account created by the Administrator for such owners and operators) is determined on a common designated representative basis.

For purposes of implementing the assurance provisions, covered units in a state are in effect grouped by common designated representative (which is defined as an individual (*i.e.,* a natural person) who is the designated representative, as distinguished from the alternate designated representative, for a group of one or more units and sources as of April 1 after the control period for which the state exceeds the state assurance level). The control period emissions of all covered units with a common designated representative are compared with the allowance allocations of such units plus their share of the state variability limit. The owners and operators of the units and sources in each group that has emissions in excess of allocations plus share of variability are subject to the assurance provisions penalty. The owners and operators of the units and sources in each group must transfer to the assurance account created for such owners and operators a total amount of allowances equal to two times such owners' and operators' proportionate share of the state's excess of covered-unit emissions over the state trading budget plus variability.

The group's proportionate share is the percentage resulting from division of the amount of the group's excess of emissions over allocations plus share of variability by the sum of these excess amounts for all groups of units with a common designated representative in the state. The final rule makes it clear that this percentage is not rounded to the nearest whole number, but rather that the calculated amount of allowances resulting from application of this percentage is rounded to the nearest whole number because, in the Transport Rule trading programs, only whole (not fractional) allowances are used. If instead this percentage were rounded before its application, each group's share would be either 100 percent or 0 percent, which would be contrary to the intent of the assurance provisions in both the final rules and the proposed rules.

The provisions addressing the assurance requirements in the final rules reflect this common-designated-representative-based approach. For example, as discussed elsewhere in this preamble, these provisions use the terms, ''common designated representative's share'' and ''common designated representative's assurance level,'' in lieu of the terms, ''owner's share'' and ''owner's assurance level,'' used in the proposed rules. By further example, these final rule provisions refer to both ''common designated representatives'' and ''owners and operators,'' rather than simply ''owners.''

The final rules also explain what vintage year (*i.e.,* allocation year) of allowances can be used in order to comply with the requirement to cover emissions and with the requirements of the assurance provisions. With regard to emissions during a control period in a given year, only allowances allocated for that year or any prior year can be used to cover such emissions. Further, only allowances of the following vintage can be used to meet excess emissions penalties and assurance penalties concerning emissions during a control period in a given year: allowances allocated for that year, any year before that year, or the year immediately after that year. This approach makes the vintage years usable for excess emissions and assurance penalties consistent and helps ensure that allowances will be available to meet these obligations.

The final rules also clarify the standard emission requirements by explaining further what is meant by the provision that an allowance is a limited authorization to emit. The final rules clarify that an allowance provides authorization to emit during the control period in one year and is limited in both its use and its duration. For example, each Transport Rule trading program's final rules state that an allowance provides an emission authorization that can only be used in accordance with the requirements of the respective trading program, such as the requirements specifying what allowances are available for use, and how such allowances must be held or transferred, in order to cover emissions or meet the assurance provisions. By further example, under the final rules, an allowance continues to provide an authorization to emit one ton of the relevant pollutant until the allowance is deducted, *e.g.,* in order to be used for compliance with the requirement to cover emissions or the requirements of the assurance provisions. Moreover, under the final rules, the Administrator has the express authority to terminate or limit the authorization to emit, and thereby change the use and duration of the authorization, described in the final rules, to the extent he or she determines to be necessary or appropriate to implement any provision of the CAA.

The remaining paragraphs in the standard requirements section address permitting, recordkeeping and reporting, liability provisions, and the effect on other CAA provisions. For example, the paragraphs concerning permitting requirements are limited to stating that no title V permit revisions are necessary to account for allowance allocation, holding, deduction, or transfer and that the minor permit modification procedures can be used to add or change general descriptions in the title V permits of the monitoring and reporting approach used by the units covered by each title V permit. These provisions remain essentially the same in the final rules as in the proposed rules.

(iv) §§ 96.407, 97.507, 97.607, and 97.707—Computation of Time

These sections address how to determine the deadlines referenced in the Transport Rule trading program rules and are, except as discussed herein, essentially the same as in the proposed rules and for each of the Transport Rule trading programs. The final rules revise the proposed rule provisions concerning the treatment of the final date in any time period in order to make the provision consistent with the approach discussed above with regard to the new definition of ''business day.'' The revised provision states that, if the final date is not a

''business day'', then the time period is extended to the next ''business day.''

(v) §§ 97.408, 97.508, 97.608, 97.708 and Part 78—Administrative Appeal Procedures

Under the final Transport Rule, final decisions of the Administrator under the Transport Rule trading programs are appealable to EPA's Environmental Appeals Board under the regulations set forth in Part 78 (40 CFR part 78), which are revised by the final Transport Rule to accommodate such appeals. The provisions in the final Transport Rule concerning appeals are, except as discussed herein, essentially the same as in the proposed Transport Rule. The proposed Transport Rule would add a provision in Part 78 explaining who is an ''interested person'' with regard to a decision, *i.e.,* a person who submitted comments, testimony, or objections as part of the process of making the decision or a person who submitted his or her name to the Administrator to be placed to an interested persons list. The final Transport Rule includes that provision, but with additional language that clarifies the process for submitting a name to be placed on such a list.

(2) Allowance Allocations

Sections 97.410 through 97.412, 97.510 through 97.512, 97.610 through 97.612, and 97.710 through 97.712 set forth: certain information related to allowance allocation and for implementation of the assurance provisions; the timing for allocation of allowances to existing and new units; and the procedures for new unit allocations. In particular, these sections include tables providing, for each state covered by the particular Transport Rule trading program and for each year, the state trading budget (without the variability limit), new unit set-aside, Indian country new unit set-aside (where applicable), and variability limit. These provisions in the final rules differ in several ways, from the proposed rules and are essentially the same for each of the Transport Rule trading programs.

With regard to the tables in the final rules for the state trading budgets (without the variability limits), new unit set-asides, and variability limits, the identity of the specific states involved and the values for each state differ from the tables in the proposed rules. The final rule values reflect the determinations and modeling underlying the final rules and discussed elsewhere in this preamble. Further, as discussed elsewhere in this preamble, the variability limits are only those based on one-year variability and not those proposed to be based on three-year variability, and Indian country set-asides are shown for states with Indian country within their borders.

With regard to existing unit allocations, the final rules provide that these allocations will be set forth in a notice of data availability to be issued by the Administrator. In contrast, the proposed rules stated that existing unit allocations would be set forth in an appendix to the rules for each Transport Rule trading program. EPA believes that including these allocations in a notice of data availability referencing the EPA Web site (rather than publishing them in tables requiring a large number of pages in the **Federal Register** for each Transport Rule trading program) is a more efficient method of making these allocations public, particularly since these allocations may be changed for 2013 and thereafter by states through SIP revisions. In addition, under the final rules the allocations for an existing unit can change if the unit does not operate (*i.e.,* has no heat input) for 2 consecutive years starting in 2012. In that case, the unit continues to receive its existing unit allocation for those years plus only 2 more years. As explained elsewhere in this preamble, this is a modification of the proposed rules, under which a unit that did not operate for 3 consecutive years would continue to receive its existing unit allocation for those years plus 3 more years.

Under the final rule provisions for new units, the Administrator allocates allowances from the new unit set-aside for the state where the respective unit is located and for each year when the unit first becomes eligible for an allocation and each year thereafter. The units eligible for new unit set-aside allocations include units commencing commercial operation on or after January 1, 2010, as well as several other categories of units, such as, for example, existing units that were not initially but then become covered units, existing units whose allocations are lost due to lack of unit operation and that subsequently begin operating again, and units that lost their allocations because they changed location from one state to another. The approach in the final rules differs from the proposed rules, which required that owners and operators initially request allowances from the new unit set-aside when the unit first became eligible for an allocation. As discussed elsewhere in this preamble, under the final rules, EPA identifies which units become eligible and when they become eligible, based on information provided in other submissions (*e.g.,* certificates of representation, monitoring system certifications, and quarterly emissions reports) that such units must make to EPA, and the requirement that owners and operators submit requests for new unit set-aside allocations is removed in the final rules.

The final rules also provide for two rounds of allocations from the new unit set-aside, in contrast with the proposed rules that provided for only one round. In the first round in the final rules (as in the single round in the proposed rules), a unit's new unit set-aside allocation initially equals that unit's emissions—as determined in accordance with §§ 97.430–97.435, 97.530–97.535, 97.630–97.635, and 97.730–97.735 of the final rules and Part 75 (40 CFR part 75)—for the control period (annual or ozone season, depending on the Transport Rule trading program involved) in the preceding year. If the new unit set-aside lacks sufficient allowances to provide this initial allocation for all of the new units, then each new unit is allocated its proportionate share (based on its initial allocation amount) of the allowances in the new unit set-aside. The Administrator issues a notice of data availability informing the public of the specific new unit allocations and provides an opportunity for submission of objections on the grounds that the allocations are not consistent with the requirements of the relevant final rule provisions. A second notice of data availability is subsequently issued in order to make any necessary corrections in the specific new unit allocations. As discussed elsewhere in this preamble, the final rules establish a somewhat different schedule for issuance of these notices of data availability than the proposed rules. In particular, a single set of dates (*i.e.,* for the first notice, June 1 of the year for which the new unit allocations are described in the notice and, for the second notice, August 1 of that year) is established for all of the Transport Rule trading programs. For the reasons discussed elsewhere in this preamble, the final rules provide for a second round of allocations to the extent that any allowances remain in the new unit set-aside after the allocations are made to new units in the first round. (In the proposed rules, remaining allowances were immediately allocated to existing units.) The units eligible for allocations in the second round are new units that commenced commercial operation during the control period for which allocations are being made and during the prior control period. The second round allocation for each such unit initially equals the positive difference (if any) between the unit's

first round allocation (if any) and the unit's emissions during the control period for which allocations are being made. If the amount of allowances remaining in the new unit set-aside after the first round is insufficient to provide this initial allocation for all of the second round new units, then each such new unit is allocated its proportionate share of the allowances remaining in the new unit set-aside. The Administrator uses notices of data availability (which are issued by December 15 (for the annual trading programs) and September 15 (for the ozone season trading program) of the control period involved and February 15 (for the annual trading programs) and November 15 (for the ozone season trading program) before the allowance transfer deadline for the control period involved, in a manner analogous to the use of such notices in the first round, to inform the public about the identification of the new units in the second round allocations and obtain and consider any objections. The February 15 and November 15 notices also inform the public about the amounts of the second round allocations. If, after both rounds of allocations, any allowances remain in the new unit set-aside, those allowances are allocated to existing units in proportion to such units' allocations.

The final rules also establish a separate Indian country new unit set-aside in each state where Indian country is located (*i.e.,* in Florida, Iowa, Kansas, Louisiana, Michigan, Minnesota, Mississippi, Nebraska, New York, North Carolina, South Carolina, Texas, and Wisconsin). As discussed elsewhere in this preamble, the Administrator operates the Indian country new unit set-aside in essentially the same manner as state new unit set-aside, except that unallocated allowances remaining in the Indian country new unit set-aside after the two rounds of new unit set-aside allocations are first placed in the new unit set-aside in the state where the Indian country involved is located and then, if still unallocated, are allocated to existing units in the state. As with the state new unit set-aside, EPA will identify the new units qualifying for the Indian country new unit set-aside, calculate the allocations, and issue notices of data availability using the same schedules as notices for the state new unit set-aside.

Under the final rules (like under the proposed rules), if a unit in certain specified categories is allocated allowances that should not have received them, the Administrator applies procedures under which the allocation is not recorded or the amount of the recorded allocations is deducted as an incorrect allocation, with one exception. The exception is where the determination of compliance with the emissions limitation (*i.e.,* requirement to hold allowances covering emissions, as distinguished from the assurance provisions) for the source that includes the unit has already been completed, in which case no action is taken to account for the erroneous allocation for the control period involved.

While this procedure concerning recordation or deduction of allocations is the same as under the proposed rules, the final rules change the description of the circumstances under which this procedure concerning recordation or deduction of allocations is applied. Under both the final rules and the proposed rules, this procedure is applied to a unit (whether an existing unit or a new unit) that receives an allocation but is not actually a covered unit. However, under the final rules, another category of units—*i.e.,* any existing unit that is not located—as of January 1 of the control period for which the allocation is received—in the state from whose trading budget the allocation was made is also subject to this procedure. Although relatively few units are moved from one state to another, EPA believes that it is important to address what happens to such units' allocations, both because each state has a limited trading budget out of which all allocations for a year to existing and new units in that state must be made and because, under the assurance provisions, determinations are made about owners' and operators' surrender of allowances based on, among other things, the allocations for units in a specific state. Because, under the final rules, a unit that is moved from one state to another may lose its existing unit allocation in the first state under the above-described procedure, the final rules also makes such a unit eligible for allocations from the new-unit set-aside of the second state.

Finally, the final rules remove, as no longer necessary, one category of units that the proposed rules included as subject to this procedure. The proposed rules, treated, as existing units, some units that had not yet operated but were projected to operate by January 1, 2012, and so the proposed rules made these units subject to the procedure for not recording or for deducting allocations if they actually were not required to certify their monitoring systems and hold allowances covering emissions starting January 1, 2012. The final rule does not treat projected units as existing units and so this category of units no longer needs to be made subject to this procedure.

(3) Designated Representatives and Alternate Designated Representatives

Sections 97.413 through 97.418, 97.513 through 97.518, 97.613 through 97.618, and 97.713 through 97.718 establish the procedures for certifying and authorizing the designated representative, and alternate designated representative, of the owners and operators of a source and the units at the source, and for changing the designated representative and alternate designated representative. These sections also describe the designated representative's and alternate designated representative's responsibilities and the process through which he or she can delegate to an agent the authority to make electronic submissions to the Administrator. Except as discussed herein, the provisions in the final rules are essentially the same as in the proposed rules and for each of the Transport Rule trading programs.

The designated representative is the individual (*i.e.,* the natural person) authorized to represent the owners and operators of each covered source and covered unit at the source in matters pertaining to all Transport Rule trading programs to which the source and units were subject. One alternate designated representative (also an individual) can be selected to act on behalf of, and legally bind, the designated representative and thus the owners and operators. Because the actions of the designated representative and alternate legally bind the owners and operators, the designated representative and alternate must submit a certificate of representation certifying that each was selected by an agreement binding on all such owners and operators and is authorized to act on their behalf.

In the final rules (like in the proposed rules), the certificate of representation must contain: Specified identifying information for the covered source (including location) and the covered units at the source and for the designated representative and alternate; the name of every owner and operator of the source and units; and certification language and signatures of the designated representative and alternate. The final rules require an additional piece of identifying information, *i.e.,* whether the unit is located in Indian country. This is necessary in order for the Administrator to implement the above-described Indian country new unit set-aside. All submissions (*e.g.,* monitoring plans, monitoring system certifications, and allowance transfers) under the final rules for a covered

source or covered unit must be submitted, signed, and certified by the designated representative or alternate, except that electronic submission may be delegated.

In order to change the designated representative or alternate, a new certificate of representation must be received by the Administrator. A new certificate of representation must also be submitted to reflect changes in the owners and operators of the source and units involved. The new certificate must be submitted within 30 days of such changes.

The final rules make explicit an implied requirement of the proposed rules, *i.e.,* that, if a unit is added to a source or is moved from one source to a second source, a certificate of representation needs to be submitted to reflect the change. This requirement is implicit in the proposed rules when a unit is added to a source because the designated representative would not be authorized to make submissions concerning the added unit unless that unit were included on the certificate of representation. Similarly, where a unit is moved to another source, new certificates of representation would need to be submitted in order for the correct designated representative to be authorized to make submissions concerning the moved unit. Moreover, because compliance accounts in the Allowance Management System would cover all units at a given source and would be based on the information in the certificate of representation submitted by the designated representative for the source, when a unit is moved from a source to a second source, the designated representative of the second source would need to submit a certificate of representation removing the moved unit from the list of units.

The final rules explicitly require that a new certificate of representation be submitted to reflect changes (whether caused by the addition or removal of units) in which units are located at a source. In addition, the final rules impose a deadline on the submission requirement of 30 days from the date of the change in the units. This is analogous to the maximum time period between a change in a unit's owner or operator and the deadline for submission of a new certificate of representative reflecting to the change. Long before any actual move of a unit to a new location, owners and operators will need to make decisions about, and plan the implementation of, such a move. Consequently, EPA believes that a 30-day deadline after any move for reflecting the move in the certificate of representation is reasonable. In the event the change involves the addition of a unit that operated before being located at the source, the final Transport Rule also requires that the designated representative provide in the certificate of representation information on the entity from which the unit was obtained, the date on which the unit was obtained, and the date on which the unit became located at the source. In the event of a change involving the removal of a unit, the designated representative must provide in the certificate of representation information on the entity that obtained the unit, the date on which that entity obtained the unit, and the date on which the unit became no longer located at the source. This information will enable the Administrator to determine what actions are necessary to reflect the change in units located at the sources involved. For example, if a covered unit is moved from one source to second source, the Administrator will have the information necessary to determine whether the unit's allocation should be changed to reflect movement of the unit from one state to another.

(4) Allowance Management System

Sections 97.420 through 97.428, 97.520 through 97.528, 97.620 through 97.628, and 97.720 through 97.728 establish the procedures and requirements for using and operating the Allowance Management System (which is the electronic data system through which the Administrator handles allowance allocation, holding, transfer, and deduction), and for determining compliance with the emissions limitations and assurance provisions, in an efficient and transparent manner. The Allowance Management System also provides the allowance markets with a record of ownership of allowances, dates of allowance transfers, buyer and seller information, and the serial numbers of allowances transferred. Except as discussed herein, these sections of the final rules are essentially the same as in the proposed rules and for each of the Transport Rule trading programs.

(i) §§ 97.420, 97.520, 97.620, and 97.720—Compliance, Assurance, and General Accounts

Under the final rules, the Allowance Management System contains three types of accounts. One type comprises compliance accounts, one of which the Administrator establishes for each covered source upon receipt of the certificate of representation for the source. A compliance account is the account in which all allowance allocations must be recorded and in which any allowances used by the covered source for compliance with the emission limitations must be held. The designated representative and alternate for the source are also the authorized account representative and alternate for the compliance account.

A second type comprises general accounts, which can be established by any entity upon receipt by the Administrator of an application for a general account. General accounts can be used by any person or group for holding or trading allowances. To open a general account, a person or group must submit an application for a general account, which is similar in many ways to a certificate of representation. The provisions for changing the authorized account representative and alternate, for submitting a superseding application to take account of changes in the persons having an ownership interest with respect to allowances, and for delegating authority to make electronic submissions are analogous to those applicable to comparable matters for designated representatives and alternates.

A third type comprises assurance accounts. The Administrator establishes one assurance account for each group of units having a common designated representative and located in a state where the assurance provisions are triggered by total emissions exceeding the state trading budget plus variability.

(ii) §§ 97.421 Through 97.423, 97.521 Through 97.523, 97.621 Through 97.623, and 97.721 Through 97.723—Recordation of Allowance Allocations and Transfers

Under the final rules, by November 7, 2011, the Administrator must record allowance allocations for existing units, as set forth in a required notice of data availability, for the Transport Rule annual NO_X, ozone-season NO_X, and SO_2 trading programs for 2012 and 2013, unless, as discussed elsewhere in this preamble, a state notifies the Administrator that the state will submit a SIP revision with existing-unit allocations for 2013 by May 1, 2012. If the Administrator approves that SIP revision by October 1, 2012, the Administrator will record the state-determined existing-unit allocations for 2013, and, in the absence of such approval by that date, the Administrator will record the EPA-determined existing-unit allocations for 2013. By July 1, 2013, the Administrator must record existing-unit allowance allocations (whether EPA- or state-determined) for each Transport Rule trading program for 2014 and 2015. By July 1, 2014, the Administrator must

record existing-unit allowance allocations for each Transport Rule trading program for 2016 and 2017. By July 1, 2015, the Administrator must record existing-unit allowance allocations for each Transport Rule trading program for 2018 and 2019. By July 1, 2016 and July 1 of each year thereafter, the Administrator must record existing-unit allowance allocations for each Transport Rule trading program for the control period in the fourth year after the year of the applicable recordation deadline. By August 1, 2012 and August 1 of each year thereafter, the Administrator must record new-unit allowance allocations for each Transport Rule trading program for that year. These recordation deadlines differ from those in the proposed rules for two reasons. First, as discussed elsewhere in this preamble, EPA is adopting provisions that allow states to submit, and EPA to approve, SIP revisions (abbreviated or full SIPs) under which the state, rather than the Administrator, determines the distribution of allowances under one or more of the Transport Rule trading programs applicable in the state. In selecting allocation recordation deadlines, EPA took into account and balanced certain countervailing factors. On one hand, EPA considered the need to provide a reasonable time for a state to develop, propose, and finalize, and for EPA to review and propose and finalize approval of, the SIP revision and the desirability of providing a reasonable opportunity for state distributions to become effective for a year relatively soon after the 2012 commencement of the Transport Rule trading programs. EPA's experience with prior trading programs has shown that the process for development and submission of SIP revisions by states and approval by EPA in many cases is about 18 months and in some cases even longer. On the other hand, EPA considered the desirability of owners and operators having allocations in their compliance accounts a reasonable time before the year for which the allocations are made (*i.e.,* the vintage year). Having the allocations recorded, to the extent possible, before the vintage year facilitates compliance decisions and use of the allowance market in implementing such decisions. EPA believes that optimally allocations would be recorded at least 3 years in advance of the vintage year.

In balancing these countervailing factors, EPA is adopting an allocation recordation schedule that provides initially for recordation ranging from 6 months to 18 months before the beginning of the control period in the first 2 years (*i.e.,* 2012 and 2013) for which allocations are made and that, as allocations for control periods in subsequent years are recorded, gradually increases the amount of time between recordation and the beginning of the year of the control period involved until allocations are recorded about three and one-half years in advance. With regard to the need to facilitate states' distribution of allowances, this approach gives states multiple opportunities to develop, submit, and obtain EPA approval for SIPs under which the states (rather than EPA) will distribute allowances under the Transport Rule trading programs for control periods relatively early in the programs. Because of time (which has in the past ranged from about 6 months to about 2 years) it may take for a state to develop and submit such a SIP and because of the time (which has in the past been at least 6 months) it will likely take EPA to review and approve such a SIP, EPA believes that 2013 is the first year for which a state can determine allowance distributions and have them recorded some minimal time before the control period involved. With regard to the need to record allowances in advance, this approach achieves recordation at least 6 months in advance and eventually achieves recordation by what EPA believes is an optimal amount of time (greater than 3 years) before the control period for which recorded allowances are issued.

As discussed elsewhere in this preamble, the approach to allowance recordation in the final rules results in following schedule for submission of abbreviated or full SIPs under the final Transport Rule. SIP revisions with existing-unit allocations for 2013 control periods must be submitted to the Administrator by April 1, 2012. Complete abbreviated and full SIPs must be submitted to the Administrator by: December 1, 2012 in order to govern allowance allocation and auction for control periods in 2014 and 2015; December 1, 2013 in order to govern control periods in 2016 and 2017; December 1, 2014 in order to govern allowance allocation and auction for control periods in 2018 and 2019; and December 1, 2015 and by January 1 of any year thereafter in order to govern allowance allocation and auction for control periods in the fifth year after the year of such submission deadline.

The second reason for the differences in the recordation deadlines in the final rules, as compared to the proposed rules, is that, in order to simplify the recordation schedule for owners and operators and EPA, EPA set uniform recordation deadlines for all of the Transport Rule trading programs. EPA believes that these deadlines provide the Agency sufficient time, after receipt of any information necessary to determine allocations (*e.g.,* for new unit set-aside allocations, the emission data from the control period in the prior year), to complete the recordation of allocations and, as discussed above, makes the allocations available to owners and operators before the year for which the allocations are made. EPA notes that these are deadlines and that the Administrator has the discretion, where feasible and appropriate, to record allocations before such deadlines.

Under the final rules (as under the proposed rules), the process for transferring allowances from one account to another is quite simple. A transfer is submitted providing, in a format prescribed by the Administrator, the account numbers of the accounts involved, the serial numbers of the allowances involved, and the name and signature of the transferring authorized account representative or alternate. If the transfer form containing all the required information is submitted to the Administrator and, when the Administrator attempts to record the transfer, the transferor account includes the allowances identified in the form, the Administrator records the transfer by moving the allowances from the transferor account to the transferee account within 5 business days of the receipt of the transfer form.

(iii) §§ 97.424, 97.524, 97.624, and 97.724—Compliance With Emissions Limitations

Under the final rules (as under the proposed rules), once a control period has ended (*i.e.,* December 31 for the Transport Rule NO_X and SO_2 annual trading programs and September 30 for the ozone-season NO_X trading program), covered sources have a window of opportunity—until the allowance transfer deadline of midnight on March 1 or December 1 following the control period for the annual and ozone season trading programs respectively—to evaluate their reported emissions and obtain any allowances that they need to cover their emissions during that control period. Each allowance issued in each Transport Rule trading program authorizes emission of one ton of the pollutant involved, and so is usable for compliance in that trading program, for a control period in the year for which the allowance was allocated or a later year. Consequently, each source needs—as of the allowance transfer deadline—to have in its compliance account, or

properly submit a transfer that moves into its compliance account, enough allowances usable for compliance to authorize the source's total emissions for the control period.

If a source fails to hold sufficient allowances for compliance to cover the emissions, then the owners and operators must provide, for deduction by the Administrator, two allowances allocated for the control period, in the year of when the emissions occurred, any prior year, or the year immediately after the year of the emissions, for every allowance that the owners and operators failed to hold as required to cover emissions. In addition, the owners and operators are subject to discretionary civil penalties for each violation.

(iv) §§ 97.425, 97.525, 97.625, and 97.725—Compliance With Assurance Provisions

Under the final rules (as under the proposed rules), the assurance provisions ensure that each state will eliminate its significant contribution to nonattainment and interference with maintenance that EPA identifies in this action. A requirement that owners and operators surrender allowances under the assurance provisions is triggered only for certain owners and operators of sources and units in a state where the total state covered-unit emissions for a control period exceed the applicable state trading budget with the variability limit. Moreover, the surrender requirement is implemented based on groups of sources and units with a common designated representative. For each group of sources and units with a common designated representative, the owners and operators of such sources and units must surrender allowances only if the units' emissions (referred to as the common designated representative's share of emissions) during the control period involved exceed the units' allocations plus share of the state variability limit (referred to as the common designated representative's share of the state trading budget with variability).

As discussed elsewhere in this preamble, EPA decided to implement the assurance provisions on a common designated representative basis, rather than on an owner basis. The final rules implement in a series of steps the process of determining which states have total covered-unit emissions sufficient to trigger the allowance surrender requirement for a given control period and determining, using the approach based on common designated representatives, which owners and operators are subject to the allowance surrender and whether those owners and operators are in compliance. This common-designated-representative-based process is more streamlined than the owner-based process in the proposed rules.

First, the Administrator performs the calculations necessary to determine whether any state has total covered-unit emissions for a control period greater than the state trading budget with the 1-year variability limit. As discussed elsewhere in this preamble, EPA decided not to use a 3-year variability limit because, among other things, such a limit seems unnecessary to ensuring elimination of significant contribution to nonattainment and interference with maintenance and would make compliance planning extremely difficult for owners and operators. By June 1, 2013 and June 1 of each year thereafter, the Administrator promulgates a notice of data availability of the results of these calculations.

Second, by July 1, for states identified in the June 1 notice of data availability as having emissions exceeding the state trading budget with variability, the designated representative of each new unit in the state that operated during but did not receive an allocation for the year involved must submit a statement to the Administrator with certain information about the unit. This information—*i.e.,* the unit's allowable emission rate for the pollutant involved (NO_X or SO_2) and heat rate—is used to calculate a surrogate allocation for the unit to be used solely for the purposes of determining whether the group of units with a common designated representative that includes the unit had emissions exceeding allocations plus share of the state's variability limit.

Third, the Administrator calculates, for each state identified in the June 1 notice of data availability and for each common designated representative of a group of units (which groups can include one or more units and sources) in the state, the common designated representative's share of emissions, the common designated representative's share of the state trading budget with the variability limit, and the amount (if any) that the groups of owners and operators of units represented by the common designated representative (which groups can include one or more owners and operators) in the state must surrender under the assurance provisions (*i.e.,* the common designated representative's proportionate share of the excess of state emissions over the state trading budget with the variability limit). The Administrator promulgates by August 1 a notice of data availability of the results of these calculations, provides an opportunity for submission of objections, and promulgates by October 1 a second notice of data availability of any necessary adjustments to the calculations. In contrast with the proposed rules, objections may be submitted concerning information in the August 1 notice, whether or not that information was also provided in the June 1 notice. In short, the process of issuing notices is shortened in the final rules by providing one, comprehensive opportunity to submit objections to the June 1 and August 1 notices, rather than two separate opportunities, one for each notice.

Also in contrast with the proposed rules, the deadlines for issuance of notices of data availability for implementation of the assurance provisions are made uniform under the final rules for all of the Transport Rule trading programs. EPA is taking this approach for the same reasons that the deadlines for issuance of notices of data availability for new unit set-aside allocations are made uniform for all of these trading programs.

Fourth, the owners and operators identified in the October 1 notice of data availability as being required to surrender allowances under the assurance provisions must transfer, by November 1, to the assurance account created by the Administrator for such owners and operators the amount of allowances (usable for compliance) that the Administrator determined in the October 1 notice of data availability. Where the October 1 notice indicates that a specified surrender amount is owed by a group of two or more owners and operators, all the group members are liable for the surrender amount, and it is up to the owners and operators in the group to decide who will actually surrender allowances. This is analogous to the situation where a group of two or more owners and operators of covered units at a source is required to hold allowances covering the unit's emissions and therefore the group of owners and operators is liable. *See* 58 FR 3590, 3599 (January 11, 1993) (discussing liability of owners and operators under allowance-holding requirements of the Acid Rain Program).

EPA believes that the approach of making the owners and operators responsible for deciding which of them will actually surrender the necessary allowances under the assurance provisions is reasonable because the identity of who is an owner or operator (particularly who is an owner) of a unit or source and the percentage of an owner's share can change during the year and this information is available to the owners and operators on an ongoing

basis, and not to EPA unless EPA were to impose new requirements for reporting this information. Further, EPA believes that it is reasonable to leave to private agreements the establishment of procedures for determining when, and under what conditions, specific owners and operators will provide the allowances for surrender. Owners and operators already make these types of determinations with regard to the surrender requirements in meeting the emissions limitations and any excess emission penalties.

As part of implementing the common-designated-representative-based approach of the assurance provisions in the final Transport Rule, the final rules provide that the Administrator (instead of the owners, as in the proposed rules) will create an assurance account for each group of the owners and operators of units and sources with a common designated representative in each state where the assurance provisions are triggered. Because the final rules require owners and operators to transfer surrendered allowances to the appropriate assurance account (rather than requiring the Administrator to deduct from accounts established by the owners), there is no need for the proposed rule provisions concerning identification of which allowances are to be deducted and first-in, first-out deduction in the absence of such identification.

The final rules provide that, in general, the surrender amounts specified in the October 1 notice for owners and operators are final and will not be revised even if the underlying data (*e.g.,* emission data) used in the calculations underlying the October 1 notice are subsequently revised. However, the final rules set forth limited exceptions to this: Where such data are revised as a result of a decision in or settlement of litigation concerning the data on appeal. EPA believes that the limitation on revisions of the surrender amounts specified in the October 1 notice are necessary to provide some certainty to owners and operators and avoid the potential for multiple changes in owners' and operators' required surrender amounts. Because the surrender amount for each group of owners and operators of units and sources with a common designated representative in a state is calculated using emission data from all of the covered units in that state, each change in one or a few units' emission data that might occur after issuance of the October 1 notice could otherwise change the calculated surrender amounts for all or many groups in the state. For the limited exceptions where the final rules provide that the surrender amounts specified in the August 1 notice may be revised, the final rules require the Administrator to set a new surrender deadline for any additional surrender required and to transfer allowances back out of the assurance account involved for any reduced surrender requirement, as appropriate.

Under the final rules (as under the proposed rules), it is not a violation of the CAA for total state covered-unit emissions to exceed the state trading budget with the variability limit or for a group of owners and operators to become subject to the allowance surrender requirement under the assurance provisions. However, the failure of any group of owners and operators to surrender the required amount of allowances in the assurance account created for such owners and operators violates the CAA and is subject to discretionary penalties, with each required allowance that was not surrendered and each day of the control period involved constituting a violation.

(v) §§ 97.426 Through 97.428, 97.526 Through 97.528, 97.626 Through 97.628, and 97.726 Through 97.728—Miscellaneous Provisions

These sections in the final rules (as in the proposed rules) include provisions allowing banking of the allowances issued in the Transport Rule trading programs, *i.e.,* the retention of unused Transport Rule allowances allocated for a given control period for use or trading in a later control period. While this can potentially cause emissions from sources in some states in some control periods to be greater than the allowances allocated for those control periods, the assurance provisions limit such emissions in a way that ensures that each state's significant contribution to nonattainment and interference with maintenance that EPA has identified in this action will be eliminated.

These sections also include provisions stating that the Administrator can, at his or her discretion and on his or her own motion, correct any type of error that he or she finds in an account in the Allowance Management System. In addition, the Administrator can review any submission under the Transport Rule trading programs, make adjustments to the information in the submission, and deduct or transfer allowances based on such adjusted information.

(5) Emissions Monitoring, Recordkeeping, and Reporting

Sections 97.430 through 97.435, 97.530 through 97.535, 97.630 through 97.635, and 97.730 through 97.735 establish emissions monitoring, recordkeeping, and reporting requirements for Transport Rule units. These provisions reference the relevant sections of Part 75 (40 CFR part 75), where the specific procedures and requirements for monitoring and reporting NO_X and SO_2 mass emissions are set forth. The provisions in the final rules are virtually the same as the monitoring, recordkeeping, and reporting requirements in the proposed rules and under previous EPA-administered trading programs, *e.g.,* the Acid Rain Program and NO_X Budget and CAIR trading programs. The final rule provisions are also essentially the same for each of the Transport Rule trading programs, except for differences reflecting the different pollutants and control periods involved.

Under the provisions of the final rules and under Part 75, a unit has several options for monitoring and reporting. A unit's options are to use: a CEMS; an excepted monitoring methodology (NO_X mass monitoring for certain peaking units and SO_2 mass monitoring for certain oil- and gas-fired units); low mass emissions monitoring for certain, non-coal-fired, low emitting units; or an alternative monitoring system approved by the Administrator through a petition process. In addition, unit owners and operators may submit, and the Administrator can approve, petitions for alternatives to Transport Rule and Part 75 monitoring, recordkeeping, and reporting requirements.

As discussed elsewhere in this preamble, the final rules and Part 75 specify that each CEMS must undergo rigorous initial certification testing and periodic quality assurance testing thereafter. In addition, when a monitoring system is not operating properly, standard substitute data procedures are applied and result in a conservative estimate of emissions for the period involved. Further, the final rules and Part 75 require electronic submission, to the Administrator and in a format prescribed by the Administrator, of a quarterly emissions report.

The final rules include revised language in §§ 97.430(b)(3), 97.530(b)(3), 97.630(b)(3), and 97.730(b)(3) that incorporates by reference, and thereby applies to units in the Transport Rule trading programs, clarification that EPA recently adopted in § 75.4(e) of Part 75 (for Acid Rain Program units)

concerning the requirements for certification, recertification, and diagnostic testing of emission monitoring systems when a unit adds a new stack or new add-on SO_2 or NO_X emission control device. *See* 76 FR 17288, 17298–300 (March 28, 2011). The revised language is adopted for the reasons set forth in the preamble of that Acid Rain Program final rule and in order to continue the approach, in the Transport Rule trading program rules, of adopting monitoring, recordkeeping, and reporting requirements that are generally consistent with those in the Acid Rain Program, which covers many units in the Transport Rule trading programs.

XII. Statutory and Executive Order Reviews

The projected impacts of this final rule as presented throughout the preamble do not reflect minor technical corrections to SO_2 budgets in three states (KY, MI, and NY) made after the impact analyses were conducted. These projections also assumed preliminary variability limits that were smaller than the variability limits finalized in this rule. EPA conducted sensitivity analysis confirming that these differences do not meaningfully alter any of the Agency's findings or conclusions based on the projected cost, benefit, and air quality impacts presented for the final Transport Rule. The results of this sensitivity analysis are presented in Appendix F in the final Transport Rule RIA.

A. Executive Order 12866: Regulatory Planning and Review and Executive Order 13563: Improving Regulation and Regulatory Review

Under EO 12866 (58 FR 51735, October 4, 1993), this action is an ''economically significant regulatory action'' because it is likely to have an annual effect on the economy of $100 million or more or adversely affect in a material way the economy, a sector of the economy, productivity, competition, jobs, the environment, public health or safety, or state, local, or tribal governments or communities.

Accordingly, EPA submitted this action to the OMB for review under EO 12866 and EO 13563 (76 FR 3821, January 21, 2011) and any changes in response to OMB recommendations have been documented in the docket for this action. In addition, EPA prepared an analysis of the potential costs and benefits for this action. This analysis is contained in the Regulatory Impact Analysis (RIA) for this action. For more information on the costs and benefits for this rule, please refer to Table VIII.C–3 of this preamble.

When estimating the human health benefits and compliance costs in Table VIII.C–3 of this preamble, EPA applied methods and assumptions consistent with the state-of-the-science for human health impact assessment, economics, and air quality analysis. EPA applied its best professional judgment in performing this analysis and believes that these estimates provide a reasonable indication of the expected benefits and costs to the nation of this rulemaking. The RIA available in the docket describes in detail the empirical basis for EPA's assumptions and characterizes the various sources of uncertainties affecting the estimates below. In doing what is laid out above in this paragraph, EPA adheres to EO 13563, ''Improving Regulation and Regulatory Review,'' (76 FR 3,821, January 21, 2011), which is a supplement to EO 12866.

In addition to estimating costs and benefits, EO 13563 focuses on the importance of a ''regulatory system [that] * * * promote[s] predictability and reduce[s] uncertainty'' and that ''identify[ies] and use[s] the best, most innovative, and least burdensome tools for achieving regulatory ends.'' EO 13563 also states that ''[i]n developing regulatory actions and identifying appropriate approaches, each agency shall attempt to promote such coordination, simplification, and harmonization. Each agency shall also seek to identify, as appropriate, means to achieve regulatory goals that are designed to promote innovation.'' We recognize that the utility sector has compliance obligations related to multiple environmental statutes authorizing regulatory action, including this rule's requirements to reduce interstate transport of harmful ozone and fine particles and their precursors, as well as other rules' requirements to reduce air toxic emissions, to reduce greenhouse gas emissions, to safely manage coal combustion wastes, and to protect aquatic wildlife from water intake procedures. In the wake of promulgating this final rule, EPA recognizes that moving forward the agency needs to approach these rulemakings in ways that allow the industry to make practical investment decisions that minimize costs in complying with all of the final rules, while still securing the fundamentally important environmental and public health benefits that led Congress to enact those authorities in the first place. At the same time, EPA notes that the flexibility inherent in the allowance-trading mechanism included in this rule affords utilities themselves a degree of latitude to determine how best to integrate compliance with the emission reduction requirements of this rule and those of the other rules.

The final rule will also reduce emissions of directly emitted PM and ozone precursors, and estimates of the $PM_{2.5}$-related benefits of these air quality improvements may be found in Tables VIII.C–1 and VIII.C–2 of this preamble. When characterizing uncertainty in the PM-mortality relationship, EPA has historically presented a sensitivity analysis applying alternate assumed thresholds in the PM concentration-response relationship. In its synthesis of the current state of the PM science, EPA's 2009 Integrated Science Assessment for Particulate Matter concluded that a no-threshold log-linear model most adequately portrays the PM-mortality concentration-response relationship. In the RIA accompanying this rulemaking, rather than segmenting out impacts predicted to be associated levels above and below a ''bright line'' threshold, EPA includes a ''lowest measured level'' (LML) analysis that illustrates the increasing uncertainty that characterizes exposure attributed to levels of $PM_{2.5}$ below the LML of each epidemiological study used to estimate $PM_{2.5}$-related premature death. Figures provided in the RIA show the distribution of baseline exposure to $PM_{2.5}$, as well as the lowest air quality levels measured in each of the epidemiology cohort studies. This information provides a context for considering the likely portion of PM-related mortality benefits occurring above or below the LML of each study; in general, our confidence in the size of the estimated reduction $PM_{2.5}$-related premature mortality diminishes as baseline concentrations of $PM_{2.5}$ are lowered. Approximately 69 percent of the avoided impacts occur at or above an annual mean $PM_{2.5}$ level of 10 $\mu g/m^3$ (the LML of the Laden et al. 2006 study); about 96 percent occur at or above an annual mean $PM_{2.5}$ level of 7.5 $\mu g/m^3$ (the LML of the Pope et al. 2002 study). Although the LML analysis provides some insight into the level of uncertainty in the estimated PM mortality benefits, EPA does not view the LML as a threshold and continues to quantify PM-related mortality impacts using a full range of modeled air quality concentrations. It is important to note that the monetized benefits include many but not all health effects associated with $PM_{2.5}$ exposure. Benefits are shown as a range from Pope, et al., (2002) to Laden, et al., (2006). These models assume that all fine particles,

regardless of their chemical composition, are equally potent in causing premature mortality because there is no clear scientific evidence that would support the development of differential effects estimates by particle type.

The cost analysis is also subject to uncertainties. Estimating the cost conversion from one process to another is more difficult than estimating the cost of adding control equipment because it is more dependent on plant specific information. More information on the cost uncertainties can be found in the RIA.

A summary of the monetized benefits and net benefits for the final rule at discount rates of 3 percent and 7 percent is in Table VIII.C–3 of this preamble. For more information on the benefits analysis, please refer to the RIA for this rulemaking, which is available in the docket.

B. Paperwork Reduction Act

EPA is required to document the information collection burden imposed by the Transport Rule on industry, states, and EPA in an information collection request (ICR). The ICR describes the information collection requirements associated with the Transport Rule and estimates the incremental costs of compliance with all such requirements, such as the requirement for industry to monitor, record, and report emission data to EPA.

The ICR for the final Transport Rule has been submitted for approval by OMB under the Paperwork Reduction Act, 44 U.S.C. 3501 *et seq.*, and the information collection requirements it documents are not enforceable until such approval has been granted. An ICR was also submitted to OMB in support of the proposed Transport Rule; no adverse comment was received by EPA on either the information collection requirements or their associated cost estimates as described in that document.

The costs associated with the information collection requirements of the Transport Rule include start-up and capital costs for units newly affected by an emission trading program, or whose reporting status has changed (*e.g.*, from ozone-season-only to annual reporting), as well as the additional operation and maintenance costs for Transport Rule-affected units already participating in an EPA-administered cap and trade program. More information on the ICR analysis is included in the final Transport Rule docket.

The records and reports generated by these activities will be used by EPA and states to ensure that affected facilities comply with emission limits and other requirements. Such records and reports are also helpful to EPA and states in both identifying affected facilities that may not be in compliance with applicable requirements and in discerning which units and what records or processes should be inspected.

The incremental capital and operating costs associated with the recordkeeping and reporting burden to Transport Rule-affected sources in states participating in the Transport Rule trading programs are approximately $26 million annually in 2010 dollars. The total number of burden hours associated with the recordkeeping and reporting burden to Transport Rule-affected sources in states participating in the Transport Rule trading programs is approximately 185,000 hours annually. These estimates include the annualized cost of installing and operating appropriate SO_2 and NO_X emission monitoring equipment to measure and report the total emissions of these pollutants from affected EGUs (serving generators greater than 25 MW). The burden to state and local air agencies, as documented in the ICR, includes any necessary SIP revisions, performance of monitor certifications, and fulfillment of audit responsibilities. Burden is defined at 5 CFR 1320.3(b).

The amendments do not require any notifications or reports beyond those required by the General Provisions. The recordkeeping requirements require only the specific information needed to determine compliance, which is specifically authorized by CAA section 114 (42 U.S.C. 7414). All information submitted to EPA for which a claim of confidentiality is made will be safeguarded according to EPA policies in 40 CFR part 2, subpart B, Confidentiality of Business Information. An Agency may not conduct or sponsor, and a person is not required to respond to a collection of information unless it displays a currently valid OMB control number. The OMB control numbers for EPA's regulations in 40 CFR are listed in 40 CFR part 9. When this ICR is approved by OMB, the Agency will publish a technical amendment to 40 CFR part 9 in the **Federal Register** to display the OMB control number for the approved information collection requirements contained in this final rule.

C. Regulatory Flexibility Act

The Regulatory Flexibility Act (RFA) generally requires an agency to prepare a regulatory flexibility analysis of any rule subject to notice and comment rulemaking requirements under the Administrative Procedure Act or any other statute unless the agency certifies that the rule will not have a significant economic impact on a substantial number of small entities. Small entities include small businesses, small organizations, and small governmental jurisdictions.

For purposes of assessing the impacts of this final rule on small entities, small entity is defined as:

(1) A small business as defined by the Small Business Administration's (SBA) regulations at 13 CFR 121.201. For the electric power generation industry, the small business size standard is an ultimate parent entity defined as having a total electric output of 4 million megawatt-hours (MWh) or less in the previous fiscal year.

(2) A small governmental jurisdiction that is a government of a city, county, town, school district or special district with a population of less than 50,000; and

(3) A small organization that is any not-for-profit enterprise which is independently owned and operated and is not dominant in its field.

TABLE XII.C–1—POTENTIALLY REGULATED CATEGORIES AND ENTITIES [a]

Category	NAICS code [b]	Examples of potentially regulated entities
Industry	221112	Fossil-fuel-fired electric utility steam generating units.
Federal Government	[c] 221112	Fossil-fuel-fired electric utility steam generating units owned by the federal government.
State/Local Government	2[c] 21112	Fossil-fuel-fired electric utility steam generating units owned by municipalities.
Tribal Government	921150	Fossil-fuel-fired electric utility steam generating units in Indian Country.

[a] Include NAICS categories for source categories that own and operate electric generating units only.
[b] North American Industry Classification System.
[c] Federal, state, or local government-owned and operated establishments are classified according to the activity in which they are engaged.

EPA used Velocity Suite's Ventyx data as a basis for identifying plant ownership and compiling the list of potentially affected small entities. For plants burning fossil fuel as the primary fuel, plant-level boiler and generator capacity, heat input, generation, and emission data were aggregated by owner and then parent company. For cooperatives, investor-owned utilities, and subdivisions that generate less than 4 billion kWh of electricity annually but may be part of a large entity, additional research on power sales, operating revenues, and other business activities was performed to make a final determination regarding size.

After considering the economic impacts of this final rule on small entities, EPA certifies that this action will not have a significant economic impact on a substantial number of small entities (No SISNOSE). This certification is based on the economic impact of this final rule to all affected small entities across all industries affected. EPA assessed the potential impact of this action on small entities and found that there are about 660 potentially affected small units (*i.e.*, greater than 25 MW and generating less than 4 million MWh) out of 3,625 existing units in the Transport Rule states. The majority of these EGUs are owned by entities that do not meet the small entity definition. The remaining 271 of the 660 EGUs are owned by 108 potentially affected small entities and are likely to be affected by this rule. EPA estimates that 24 of the 108 identified small entities will have annualized costs greater than 1 percent of their revenues, and the other 84 are projected to incur costs less than 1 percent of revenues. Eleven small entities out of 108—approximately 10 percent—are estimated to have annualized costs greater than 3 percent of their revenues. EPA has lessened the impacts for small entities by excluding all units smaller than 25 MWe. This exclusion, in addition to the exemptions for cogeneration units and solid waste incineration units, eliminates the burden of higher costs for a substantial number of small entities located in the Transport Rule states.

While the total number of small entities has increased compared to the proposal as a result of updated modeling and changes in geographic coverage, the number with compliance costs greater than 1 percent of revenues has fallen, and both the number and percentage of significantly impacted small entities (costs greater than 3 percent of revenues) are lower—now 10 percent compared to 17 percent in the proposal. The share of significantly impacted small entities has fallen because of updated modeling and the change in the allowance allocation methodology (see section VII.D for more information about allowance allocations).

Although this final rule will not have a significant economic impact on a substantial number of small entities, EPA nonetheless has tried to reduce the impact of this rule on small entities. In EPA's modeling, most of the cost impacts for these small entities and their associated units are driven by lower electricity generation relative to the base case. Specifically, two small units reduce their generation by significant amounts, driving the bulk of the costs for all small entities. Excluding these two units, one of the main drivers of small entity impacts is higher fuel costs, which the affected units would incur irrespective of whether they had to comply with this rule. In addition, EPA's decision to exclude units smaller than 25 MWe has already significantly reduced the burden on approximately 390 small entities.

For more information on the small entity impacts associated with the final rule, refer to the Regulatory Impact Analysis for this final rule, which can be found in the docket for this rule and on the Web site *http://www.epa.gov/airtransport*.

D. Unfunded Mandates Reform Act

Title II of the Unfunded Mandates Reform Act of 1995 (UMRA), 2 U.S.C. 1531–1538, requires federal agencies, unless otherwise prohibited by law, to assess the effects of their regulatory actions on state, local, and tribal governments, and the private sector. This rule contains a federal mandate that may result in expenditures of $100 million or more for state, local, and tribal governments, in the aggregate, or the private sector in any 1 year. Accordingly, EPA has prepared, under section 202 of the UMRA, a written statement which is summarized later.

Consistent with the intergovernmental consultation provisions of section 204 of the UMRA, EPA held consultations with the governmental entities affected by this rule during the proposal phase. Subsequently, EPA sent a letter to the ten Representative National Organizations to draw their attention to the Transport Rule Notice of Data Availability (NODA) on allowance allocations and other related matters and to invite their comments. During the NODA comment period, EPA participated in informational calls with the Environmental Council of the States (ECOS) and the National Governors Association to provide information about the NODA directly to state and local officials. There were no new concerns raised during these informational calls. In addition, EPA also conducted consultations with federally recognized tribes prior to finalizing this rule and invited them to comment on the allowance allocation NODA. EPA has added a new unit set-aside provision to this final rule specifically for EGUs constructed in Indian country to ensure allowances are available to tribes and tribal sovereignty is respected.

Consistent with section 205, EPA identified and considered a reasonable number of regulatory alternatives. In the proposal, EPA included three remedy options that it considered when developing this final rule: (1) The preferred remedy trading programs, (2) State Budgets/Intrastate Trading, and (3) Direct Controls. Moreover, section 205 allows EPA to adopt an alternative other than the least costly, most cost-effective, or least burdensome alternative if the Administrator publishes with the final rule an explanation why that alternative was not adopted.

EPA examined the potential economic impacts on state- and municipality-owned entities associated with this rulemaking based on assumptions of how the affected states will implement control measures to meet program requirements. Although EPA does not conclude that the requirements of the UMRA apply to the Transport Rule, these impacts have been calculated to provide additional understanding of the nature of potential impacts and additional information.

EPA has determined that this rule contains a federal mandate that may result in expenditures of $100 million or more in 1 year. EPA has determined that this rule contains no regulatory requirements that might significantly or uniquely affect small governments and that development of a small government plan under section 203 of the Act is not required. The costs of compliance will be borne predominately by sources in the private sector although a small number of sources owned by state and local governments may also be impacted. The requirements in this action do not distinguish EGUs based on ownership, either for those units that are included within the scope of the rule or for those units that are exempted by the generating capacity cut-off. Therefore, this rule is not subject to the requirements of section 203 of UMRA because it contains no regulatory requirements that might significantly or uniquely affect small governments.

E. Executive Order 13132: Federalism

This final rule does not have federalism implications. It will not have substantial direct effects on the states, on the relationship between the national government and the states, or on the distribution of power and responsibilities among the various levels of government, as specified in Executive Order 13132. The final rule primarily affects private industry, and does not impose significant economic costs on state or local governments. Thus, Executive Order 13132 does not apply to the final rule.

Although section 6 of Executive Order 13132 does not apply to the final rule, EPA did provide information to state and local officials during development of both the proposal and final rule. EPA sent a letter to the ten Representative National Organizations to draw their attention to the Transport Rule NODA on allowance allocations and other related matters and to invite their comments. Following that letter in early 2011, EPA participated in informational calls with the Environmental Council of the States (ECOS) and the National Governors Association to provide information about the NODA directly to state and local officials. There were no new concerns raised during these informational calls.

F. Executive Order 13175: Consultation and Coordination With Indian Tribal Governments

Under Executive Order 13175 (65 FR 67249, November 9, 2000), EPA may not issue a regulation that has tribal implications, that imposes substantial direct compliance costs, and that is not required by statute, unless the federal government provides the funds necessary to pay the direct compliance costs incurred by tribal governments, or EPA consults with tribal officials early in the process of developing the proposed regulation and develops a tribal summary impact statement.

EPA has concluded that this action may have tribal implications if a new unit covered by the rule is built in Indian country. Additionally, tribes have a vested interest in how this final rule affects their air quality. However, it will neither impose substantial direct compliance costs on tribal governments, nor preempt tribal law. EPA consulted with tribal officials during the process of finalizing this regulation to permit them to have meaningful and timely input into its development.

EPA received comments on the proposed Transport Rule that the Agency did not properly conduct consultation during the proposal phase of the rulemaking process. In response to these comments, EPA sent a letter to all federally-recognized tribes in the country offering consultation. In addition, several commenters also noted that the Agency did not adequately consider opportunities for tribes to enter into any of the trading programs and, in particular, did not consider sovereignty issues when addressing how to distribute allowances to potential new units in Indian country. On January 7, 2011, EPA issued a NODA requesting comment on allocations for new units in Indian country, among other topics.

The Agency held a consultation call with three tribes on January 21, 2011. A follow-up call was held on February 4, 2011 with two of the three original tribes plus 13 additional tribes, as well as representatives from the National Tribal Air Association. In all ten tribes participated in these calls as consultation and six participated as information-sharing. EPA considered the additional input from these consultation and information calls, in conjunction with the public comments, in the development of the final rule. Accordingly, EPA created an Indian country new unit set-aside to specifically address tribes' concerns regarding the protection of tribal sovereignty in the distribution of allowances for new units in Indian country. *See* section VII.D.2 of this preamble for details on the Indian country set-aside for new units constructed in Indian country within states covered by the Transport Rule.

As required by section 7(a) of the Executive Order, EPA's Tribal Consultation Official has certified that the requirements of the Executive Order have been met in a meaningful and timely manner. A copy of the certification is included in the docket for this action.

G. Executive Order 13045: Protection of Children From Environmental Health and Safety Risks

Executive Order 13045 (62 FR 19,885, April 23, 1997) applies to any rule that: (1) Is determined to be ''economically significant'' as defined under EO 12866, and (2) concerns an environmental health or safety risk that EPA has reason to believe may have a disproportionate effect on children. If the regulatory action meets both criteria, the Agency must evaluate the environmental health or safety effects of this planned rule on children, and explain why this planned regulation is preferable to other potentially effective and reasonably feasible alternatives considered by the Agency.

This action is not subject to Executive Order 13045 because it does not involve decisions on environmental health or safety risks that may disproportionately affect children. EPA believes that the emission reductions from the strategies in this rule will further improve air quality and will further improve children's health. Analyses by EPA that show how the emission reductions from the strategies in this rule will further improve air quality and children's health can be found in the RIA for this rule.

H. Executive Order 13211: Actions That Significantly Affect Energy Supply, Distribution, or Use

Executive Order 13211 (66 FR 28355, May 22, 2001) provides that agencies shall prepare and submit to the Administrator of the Office of Regulatory Affairs, OMB, a Statement of Energy Effects for certain actions identified as ''significant energy actions.'' Section 4(b) of Executive Order 13211 defines ''significant energy action'' as ''any action by an agency (normally published in the **Federal Register**) that promulgates or is expected to lead to the promulgation of a final rule or regulation, including notices of inquiry, advance notices of proposed rulemaking, and notices of proposed rulemaking: (1)(i) That is a significant regulatory action under Executive Order 12866 or any successor order, and (ii) is likely to have a significant adverse effect on the supply, distribution, or use of energy; or (2) that is designated by the Administrator of the Office of Information and Regulatory Affairs as a significant energy action.'' This rule is a significant regulatory action under Executive Order 12866, and this rule is likely to have a significant adverse effect on the supply, distribution, or use of energy. EPA prepared a Statement of Energy Effects for this action as follows.

Under the provisions of this rule, EPA projects that approximately 4.8 GW of additional coal-fired generation may be removed from operation by 2014. In practice, however, the units projected to be uneconomic to maintain may be ''mothballed,'' retired, or kept in service to ensure transmission reliability in certain parts of the grid. These units are predominantly small and infrequently-used generating units dispersed throughout the area affected by the rule. If current forecasts of either natural gas prices or electricity demand were revised in the future to be higher, that would create a greater incentive to keep these units operational.

EPA estimates that average retail electricity prices could increase in the

contiguous U.S. by about 1.7 percent in 2012 and 0.8 percent in 2014. This is generally less of an increase than often occurs with fluctuating fuel prices and other market factors. Related to this, EPA projects limited impacts on coal and gas prices. The average delivered coal price decreases by about 1.4 percent in 2012 and 0.9 percent in 2014 relative to the base case as a result of decreased coal demand and shifts in the type of coal demanded. EPA also projects that the electric power sector-delivered natural gas price will increase by about 0.3 percent over the 2012–2030 timeframe and that natural gas use for electricity generation will increase by approximately 200 billion cubic feet (BCF) by 2014. These impacts are well within the range of price variability that is regularly experienced in natural gas markets. Finally, under the Transport Rule, EPA projects that coal production for use by the power sector will increase above 2009 levels by 21 million tons in 2012 and a further 14 million tons in 2014, as opposed to 30 million tons in 2012 and a further 26 million tons in 2014 without the Transport Rule in place. The Transport Rule is not projected to impact production of coal for uses outside the power sector (*e.g.,* export, industrial sources), which represent approximately 6 percent of total coal production in 2009. EPA does not believe that this rule will have any other impacts (*e.g.,* on oil markets) that exceed the significance criteria.

EPA believes that a number of features of the rulemaking serve to reduce its impact on energy supply. First, the trading component of the Transport Rule provides flexibility to the power sector and enables industry to comply with the emission reduction requirements in the most cost-effective manner compared to the alternative remedy approaches on which EPA took comment in the proposal, thus minimizing overall costs and the ultimate impact on energy supply. Second, the more stringent budgets for SO_2 are set in two phases, providing adequate time for EGUs to install pollution controls. In addition, both the operational flexibility of trading and the ability to bank allowances for future years helps industry plan for and ensure reliability in the electrical system.

For more details concerning energy impacts, *see* the RIA for the Transport Rule.

I. National Technology Transfer Advancement Act

Section 12(d) of the National Technology Transfer and Advancement Act of 1995 (NTTAA), Public Law 104–113, 12(d) (15 U.S.C. 272 note) directs EPA to use voluntary consensus standards in its regulatory activities unless to do so would be inconsistent with applicable law or otherwise impractical. Voluntary consensus standards are technical standards (*e.g.,* materials specifications, test methods, sampling procedures, and business practices) that are developed or adopted by voluntary consensus standards bodies. NTTAA directs EPA to provide Congress, through OMB, explanations when the Agency decides not to use available and applicable voluntary consensus standards. This rule will require all sources to meet the applicable monitoring requirements of 40 CFR part 75. Part 75 already incorporates a number of voluntary consensus standards. Consistent with the Agency's Performance Based Measurement System (PBMS), Part 75 sets forth performance criteria that allow the use of alternative methods to the ones set forth in Part 75. The PBMS approach is intended to be more flexible and cost effective for the regulated community; it is also intended to encourage innovation in analytical technology and improved data quality. At this time, EPA is not recommending any revisions to Part 75; however, EPA periodically revises the test procedures set forth in Part 75. When EPA revises the test procedures set forth in Part 75 in the future, EPA will address the use of any new voluntary consensus standards that are equivalent. Currently, even if a test procedure is not set forth in Part 75, EPA is not precluding the use of any method, whether it constitutes a voluntary consensus standard or not, as long as it meets the performance criteria specified; however, any alternative methods must be approved through the petition process under 40 CFR 75.66 before they are used.

J. Executive Order 12898: Federal Actions To Address Environmental Justice in Minority Populations and Low-Income Populations

Executive Order (EO) 12898 (59 FR 7629 (Feb. 16, 1994)) establishes federal executive policy on environmental justice. Its main provision directs federal agencies, to the greatest extent practicable and permitted by law, to make environmental justice part of their mission by identifying and addressing, as appropriate, disproportionately high and adverse human health or environmental effects of their programs, policies, and activities on minority, low-income, and Tribal populations in the United States. During development of this final Transport Rule, EPA considered its impacts on low-income, minority, and tribal communities in several ways and provided multiple opportunities for these communities to meaningfully participate in the rulemaking process. The proposed Transport Rule included an analysis of its effects on these populations; this section describes additional analysis conducted since proposal, EPA's responses to key comments on environmental justice issues raised during the comment period, and the public outreach and comment opportunities for this rule.

A summary of the history, statutory authority, and key components of this final Transport Rule are described in the Executive Summary (section III) of this preamble. That section also summarizes a supplemental notice of proposed rulemaking (SNPR) that EPA is publishing to correct a procedural flaw by providing an opportunity for public comment on issues that arose from new analyses with updated inventories and modeling platforms.

Briefly, this final Transport Rule will reduce emissions of SO_2 and NO_X in 23 eastern and central states in 2012 and 2014 that contribute to annual and/or 24-hour $PM_{2.5}$ nonattainment or interfere with maintenance in downwind states. It will also reduce emissions of ozone-season NO_X in 20 eastern and central states in 2012 and 2014 that contribute to the 1997 ozone nonattainment or interfere with maintenance in downwind states. This rule is replacing an earlier rule (the 2005 Clean Air Interstate Rule (CAIR)) that was first vacated and then remanded to EPA by the U.S. Court of Appeals for the District of Columbia Circuit in 2008.

1. Consideration of Environmental Justice in the Transport Rule Development Process and Response to Comments

The effects of this final Transport Rule on the most highly exposed populations were integral in its development. This rule uses EPA's authority in CAA section 110(a)(2)(d) to reduce sulfur dioxide (SO_2) and (nitrogen oxides) NO_X pollution that significantly contributes to downwind $PM_{2.5}$ and ozone nonattainment or maintenance areas. As a result, the rule will reduce exposures to ozone and $PM_{2.5}$ in the most-contaminated areas (*i.e.,* areas that are not meeting the 1997 ozone and 1997 and 2006 $PM_{2.5}$ National Ambient Air Quality Standards (NAAQS)). In addition, the rule separately identifies both nonattainment areas and maintenance areas (maintenance areas are those that are projected to meet the NAAQS but that, based on past data, are in danger of

exceeding the standards in the future). This requirement reduces the likelihood that any areas close to the level of the standard will exceed the current health-based standards in the future.

This final Transport Rule implements these emission reductions using an emission trading mechanism with assurance provisions for power plants. EPA recognizes that many environmental justice communities have voiced concerns in the past about emission trading and the potential for any emission increases in any location. EPA also received several comments on this issue during the comment period for the proposed Transport Rule. As described below, we believe this final rule addresses the concerns raised on this issue during the comment period.

$PM_{2.5}$ and ozone pollution from power plants have both local and regional components: Part of the pollution in a given location—even in locations near emission sources—is due to emissions from nearby sources and part is due to emissions that travel hundreds of miles and mix with emissions from other sources. Therefore, in many instances the exact location of the upwind reductions does not affect the levels of air pollution downwind.

It is important to note that the section of the Clean Air Act providing authority for this rule, section 110(a)(2)(D), unlike some other provisions, does not dictate levels of control for particular facilities. As at least one commenter noted, none of the alternatives put forward by EPA in the proposed rule could have ensured no emission increases at any facility. Under the direct control alternative, the emission rate for each facility would have been limited but each facility could emit more by increasing their power output in order to meet electricity reliability or other goals. Under the intrastate trading option, sources could not trade allowances with sources in other states but individual facilities within each state could have increased their emissions as long as another facility in the state had decreased theirs at some time.

The final Transport Rule allows sources to trade allowances with other sources in the same or different states while firmly constraining any emissions shifting that may occur by requiring a strict emission ceiling in each state (the budget plus variability limit). In addition, assurance provisions in the rule outline the allowance surrender penalties for failing to meet the budget plus variability limits; there are additional allowance penalties as well as financial penalties for failing to hold an adequate number of allowances to cover emissions. This approach eliminates emissions in each state that significantly contribute to downwind nonattainment or maintenance areas, while allowing power companies to adjust generation as needed and ensure that the country's electricity needs will continue to be met. EPA maintains that the existence of these assurance provisions, including the penalties imposed when triggered, will ensure that state emissions will stay below the level of the budget plus variability limit.

In addition, all sources must hold enough allowances to cover their emissions. Therefore, if a source emits more than its allocation in a given year, either another source must have used less than its allocation and be willing to sell some of its excess allowances, or the source itself had emitted less than its allocation in one or more previous years (*i.e.,* banked allowances for future use).

In summary, the final remedy addresses commenter concerns about localized hot spots and reduces ambient concentrations of pollution where they are most needed by sensitive and vulnerable populations by: Considering the science of ozone and $PM_{2.5}$ transport to set strict state budgets to eliminate significant contributions to ozone and $PM_{2.5}$ nonattainment and maintenance (*i.e.,* the most polluted) areas; implementing air quality-assured trading; requiring any emissions above the level of the allocations to be offset by emission decreases; and imposing strict penalties for sources that contribute to a state's exceedance of its budget plus variability limit. In addition, it is important to note that nothing in this final rule allows sources to violate their title V permit or any other federal, state, or local emissions or air quality requirements.

EPA received comments from several tribal commenters regarding the lack of allocations in the proposal to new units in Indian Country. EPA responded to these comments by changing the allocation approach in the final rule to create Indian country new unit set-asides. In order to protect tribal sovereignty, these set-asides will be managed and distributed by the federal government regardless of whether the Transport Rule in the adjoining or surrounding state is implemented through a FIP or SIP. While there are no existing power plants in Indian country covered by this Transport Rule, the Indian country set-asides will ensure that any future new units built in Indian country will be able to get the necessary allowances. A full discussion of the Indian country new unit set-asides can be found in section VII.D.2.

EPA also received several comments during the comment period from individuals and groups requesting additional emission reductions to further protect sensitive and vulnerable communities. While EPA has adjusted the emission requirements somewhat in the final rule to accommodate revised data and updated modeling results, we are finalizing emission reductions very similar to the level in the proposal. This is because EPA believes that the emission reductions required by this final rule are appropriate to meet the statutory requirements of CAA section 110(a)(2)(d) and respond to the concerns raised by the Court's opinion in *North Carolina* that remanded CAIR to the Agency in 2008.

In addition, it is important to note that CAA section 110(a)(2)(d), which addresses transport of criteria pollutants between states, is only one of many provisions of the CAA that provide EPA, states, and local governments with authorities to reduce exposure to ozone and $PM_{2.5}$ in communities. These legal authorities work together to reduce exposure to these pollutants in communities, including for minority, low-income, and tribal populations, and provide substantial health benefits to both the general public and sensitive sub-populations.

For example, the recently-proposed Mercury and Air Toxics Standards (MATS) would also result in significant reductions in SO_2 emissions and provide significant health and environmental benefits nationwide. This and other actions described in section III will have substantial and long-term effects on both the U.S. power industry and on communities currently breathing dirty air. Therefore, we anticipate significant interest in many, if not most, of these actions from environmental justice communities, among many others. EPA will continue to provide multiple opportunities for comment on these actions, similar to the opportunities provided during the comment process for this rule, detailed at the end of this section. We encourage environmental justice communities to review and comment on these actions.

2. Potential Environmental and Public Health Impacts Among Populations Susceptible or Vulnerable to Air Pollution

EPA expects that this final rule will provide significant health and environmental benefits to, among others, people with asthma, people with heart disease, and people living in ozone or $PM_{2.5}$ nonattainment areas. EPA's analysis of the effects of this rule, including information on air quality changes and the resulting health benefits, is presented both in section

VIII of this preamble and in the Regulatory Impact Analysis (RIA) for this rule. These documents can be accessed through the rule docket No. EPA–HQ–OAR–2009–0491 and from the main EPA webpage for the rule at *http://www.epa.gov/airtransport.*

EPA considered several aspects of the effects of the Transport Rule on minority, low-income, and tribal populations. These included: amount of emission reductions and where they take place (including any potential for areas of increased emissions); the changes in ambient concentrations across the affected area; the estimated health benefits; and how the estimated health benefits are distributed among different populations, including those susceptible and vulnerable to air pollution health impacts.

a. Emission Reductions

EPA's emission modeling data indicate that implementation of the Transport Rule will substantially reduce SO_2 emissions from electric generating units (EGUs). As noted in section III, emissions in states covered by the Transport Rule will decrease by 6.4 million tons (73 percent) in 2014 compared to 2005 (the year the Clean Air Interstate Rule was finalized). Emissions are also projected to decrease when compared to the base case (the base case estimates emissions in 2014 in the absence of this rule or the Clean Air Interstate Rule it is replacing). EPA estimates that SO_2 emissions in 2014 in covered states will be 3.9 million tons lower (62 percent lower) compared to the base case.

EPA also assessed emission changes in states not covered by the Transport Rule. Emissions in the states not covered by the Transport Rule are also projected to decrease substantially compared to 2005 levels; in 2014 SO_2 emissions are projected to be approximately 430,000 tons lower (30 percent lower) than in 2005.

As described in section VI.C, EPA's modeling does project that some states not covered by any of the fine particle control programs in the final Transport Rule may experience increases of SO_2 emissions greater than 5,000 tons compared to the base case. These states are Arkansas, Colorado, Louisiana, Montana, and Wyoming. These emission increases are the result of forecasted changes in operation of power plant units outside of the Transport Rule states due to the interconnected nature of the utility grid (*i.e.,* shifts in generation of electricity to sources outside the Transport Rule states) or influence of the rule on the market for lower sulfur coal. For example, EPA projects that the rule will raise demand for lower sulfur coal in the states covered by the Transport Rule for $PM_{2.5}$ (thereby raising its price), which may lead sources in states not covered for $PM_{2.5}$ to choose higher-sulfur coals that increase SO_2 emissions in those states.

EPA is not requiring SO_2 emission reductions in these states under this rule because our modeling indicates none of these states' contributions would increase enough to cause them to meet or exceed the thresholds described in section V.D for either of the $PM_{2.5}$ standards. EPA's authority under CAA section 110(a)(2)(d) is limited to addressing this significant contribution to nonattainment and interference with maintenance. However, as noted above, EPA has recently proposed the Mercury and Air Toxics Standards that will apply nationwide and result in substantial additional SO_2 emission reductions, including in states not covered by the Transport Rule.

EPA's emission modeling data indicates that ozone-season NO_X emissions from EGUs in states covered by the Transport Rule will be approximately 340,000 tons lower (36 percent lower) in 2014 than they were in 2005. Emissions in states not covered by the Transport Rule are also expected to decrease somewhat (approximately 82,000 tons or 25 percent). EPA's modeling does project that two states (California and Pennsylvania) may experience increases of NO_X emissions greater than 5,000 tons in 2014 compared to 2005 levels. California is not covered by the Transport Rule; in Pennsylvania, 2005 was an unusually low-emitting year and sources are projected to increase their heat input slightly (usually meaning they are generating more power) after the rule takes effect.

EPA also assessed the expected changes in seasonal NO_X emissions with implementation of the Transport Rule compared to the base case (*i.e.,* without the rule) in 2014. The modeling indicates ozone-season NO_X emissions from EGUs in both covered states and non-Transport Rule states under this rule will be lower than they would have been in 2014 in the base case. Ozone-season NO_X emissions in covered states are projected to decrease by approximately 74,000 tons (11 percent); ozone-season NO_X emissions in non-Transport Rule states are projected to decrease by approximately 10,000 tons (4 percent). Both California and Pennsylvania are projected to have lower NO_X emissions in 2014 under the Transport Rule as compared to the base case. In addition, EPA anticipates that additional upcoming actions, including likely additional interstate transport reductions to help states attain the upcoming new ozone NAAQS, will result in significant additional NO_X reductions in the future.

b. Air Quality Improvements

EPA assessed the air quality metrics (called ''design values'') for each NAAQS addressed in this rule: 24-hour $PM_{2.5}$, annual $PM_{2.5}$, and ozone. We then compared these metrics for the final rule to the same metrics in the recent past (2003–2007 average ambient air quality) and for the 2014 base case to assess improvements in air quality.

EPA's modeling indicates that there will be significant improvements in air quality as measured by the 24-hour $PM_{2.5}$ standard. Throughout much of the eastern half of the U.S., 24-hour $PM_{2.5}$ design values are projected to improve more than 10 $\mu g/m^3$ compared to the 2003–2007 average levels. In addition, compared to the 2014 base case levels, we project the Transport Rule will result in improvements of 8–10 $\mu g/m^3$ in a broad swath of states stretching from far southwestern New York through Pennsylvania, Ohio, West Virginia, Maryland, Indiana, southern Illinois, eastern Missouri, eastern Arkansas, Kentucky, Tennessee, northern Alabama, and northern Mississippi. Isolated areas of Virginia and northern New Jersey are also expected to see this level of improvement. Improvements of 2–6 $\mu g/m^3$ are projected in surrounding states stretching from New England and New York to Minnesota, Iowa, the far eastern edge of Nebraska, Missouri, eastern Kansas, Oklahoma, Texas, the Gulf of Mexico states, and the states bordering the Atlantic Ocean from Florida to New Hampshire.

EPA modeling indicates that air quality as measured by the annual $PM_{2.5}$ design value will also improve. Improvements range from 2 to over 4 $\mu g/m^3$ compared to the 2003–2007 average levels throughout the eastern half of the U.S. Annual $PM_{2.5}$ air quality with the Transport Rule is also projected to improve compared to the 2014 base case levels. The largest improvements of up to 4 $\mu g/m^3$ are projected to occur in northern West Virginia and a small area in northwestern Tennessee. Improvements of up to 3 $\mu g/m^3$ are projected for portions of the Ohio River valley areas of southwestern Pennsylvania, Ohio, West Virginia, Kentucky, central Tennessee, and southern Indiana. Improvements of up to 2 $\mu g/m^3$ are projected to take place in a ring of surrounding states including all or most of New York, Michigan, Indiana,

Illinois, Missouri, Arkansas, the far eastern edge of Oklahoma, the northeastern edge of Texas, Louisiana, Mississippi, Alabama, Georgia, South Carolina, North Carolina, Virginia, Maryland, Delaware, Pennsylvania, and New Jersey. Smaller improvements are projected in New England, Wisconsin, the Plains states, southeastern New Mexico, and Florida.

EPA modeling indicates that ozone air quality will improve greatly (10–12 ppb or more) across much of the eastern U.S. between the average levels seen in 2003–2007 and implementation of the Transport Rule. Most of the improvements take place in the base case; that is, they are the result of federal and state programs other than the Transport Rule. However, ozone air quality is projected to improve somewhat as a direct result of the Transport Rule. Improvements in ozone design values compared to the base case of more than 1 ppb are projected for portions of Florida, eastern Oklahoma, and areas along the upper reaches of the Ohio River. In addition, improvements in ozone design values of up to 1 ppb are projected over a wide area across the eastern U.S. from New England to Texas and north to Minnesota. Improvements are also projected in north-central Colorado.

EPA's modeling does indicate small increases in annual $PM_{2.5}$ air quality design values in the final rule compared to the 2014 base case in two counties outside of the Transport Rule states: one county in northern Colorado and one county in eastern Montana. As noted above in the section on emissions, these increases are likely the result of forecasted changes in electricity generation due to the interconnected nature of both the utility grid and the national low-sulfur coal market. It should be noted that 2003–2007 average air quality levels in these counties are well below the level of the NAAQS. In addition, other actions, including federal rules such as the recently proposed Mercury and Air Toxics Standards, state, or local actions may also improve air quality in these areas over the next few years.

As described in section VIII.B, EPA anticipates that this final rule will reduce, but not eliminate, the number of nonattainment and maintenance areas for the 1997 ozone and $PM_{2.5}$ and 2006 $PM_{2.5}$ NAAQS. As noted above, ozone and $PM_{2.5}$ concentrations are the result of both local emissions and long-range transport of pollution. Even when the significant contributions of upwind states are fully eliminated, additional emission reductions within the nonattainment area and/or the downwind state will be needed for some areas to attain and maintain the NAAQS.

c. Estimated Health Benefits

This rule reduces concentrations of $PM_{2.5}$ and ozone pollution. Exposure to these pollutants can cause, or contribute to, adverse health effects that affect many minority, low-income, and tribal individuals and communities. $PM_{2.5}$ and ozone are particularly (but not exclusively) harmful to children, the elderly, and people with existing heart and lung diseases, including asthma. Exposure to these pollutants can cause premature death and trigger heart attacks, asthma attacks in those with asthma, chronic and acute bronchitis, emergency room visits and hospitalizations, as well as milder illnesses that keep children home from school and adults home from work. High rates of heart disease (*e.g.,* high blood pressure) [123] and asthma [124] exist in many environmental justice communities, making these populations more susceptible to air pollution health impacts. In addition, many individuals in these communities lack access to high quality health care to treat these illnesses.[125]

We estimate that in 2014 the PM-related annual benefits of the final rule include approximately 13,000 to 34,000 fewer premature mortalities, 8,700 fewer cases of chronic bronchitis, 15,000 fewer non-fatal heart attacks, 8,500 fewer hospitalizations (for respiratory and cardiovascular disease combined), 10 million fewer days of restricted activity due to respiratory illness, and approximately 1.7 million fewer lost work days. We also estimate substantial health improvements for children in the form of fewer cases of upper and lower respiratory illness, acute bronchitis, and asthma attacks.

Ozone health-related benefits are expected to occur during the summer ozone season (usually ranging from May to September in the eastern U.S.). Based upon modeling for 2014, annual ozone related health benefits are expected to include (in addition to the PM-related benefits above) between 27–120 fewer premature mortalities, 240 fewer hospital admissions for respiratory illnesses in children and older adults, 86 fewer emergency room admissions for asthma, 160,000 fewer days with restricted activity levels, and 51,000 fewer ''school absence'' days when children are absent from school due to illnesses. When adding the PM and ozone-related mortalities together, we find that the final rule will yield between 13,000 and 34,000 fewer premature mortalities.

It should be noted that, as discussed in the RIA, there are other benefits to the emission reductions discussed here, including many other health benefits beyond reducing the risk of premature mortality. Additional benefits of reducing emissions of SO_2 include improved visibility, reduced acidification of lakes and streams, and reduced mercury methylation in contaminated waters; additional benefits of NO_X reductions include improved visibility, reduced acidification of lakes and streams, and reduced coastal eutrophication.

d. Distribution of Health Benefits Among Different Populations

EPA also estimated the $PM_{2.5}$ mortality risks according to race, income, and educational attainment before and after implementation of this Transport Rule. We used premature mortality for this analysis for several reasons: It is the most serious health effect of exposure to $PM_{2.5}$, and EPA has access to nationwide incidence and demographic data at an appropriate scale to conduct this type of analysis. EPA included educational attainment in this assessment because research on the effects of $PM_{2.5}$ has found that educational attainment is inversely related to the risk of all-cause mortality. That is, populations with lower levels of education (in particular, less than grade 12) experience higher rates of $PM_{2.5}$ mortality. Krewski and colleagues [126] note in their analysis of this relationship that the level of education attainment is likely to be a surrogate for the effects of complex socioeconomic processes (including factors such as race and income) on mortality.

In the first step of the analysis, we estimated baseline (2005) $PM_{2.5}$ mortality risk by race (White, Black, Asian, Native American) among people living in the counties with the highest (top 5 percent) $PM_{2.5}$ mortality risk. We

[123] Neighborhood of Residence and Incidence of Coronary Heart Disease Ana V. Diez Roux, M.D., PhD *et al.* N Engl J Med 2001; 345:99–106; July 12, 2001.

[124] Centers for Disease Control and Prevention. 2007 National Health 11. Interview Survey Data. Table 4–1. Current Asthma Prevalence Percents by Age, United States: National Health Interview Survey, 2007. Atlanta, GA: U.S. Department of Health and Human Services, CDC, 2010. Accessed June 1, 2010.

[125] R. Nelson, Eds. National Institute of Medicine, 2003.

[126] Krewski D, Jerrett M, Burnett RT, Ma R, Hughes E, Shi Y, Turner C, Pope CA, Thurston G, Calle EE, Thunt MJ. Extended follow-up and spatial analysis of the American Cancer Society study linking particulate air pollution and mortality. HEI Research Report, 140, 2009; Health Effects Institute, Boston, MA.

also estimated baseline $PM_{2.5}$ mortality risk by race among people living in the counties with both the highest (top 5 percent) poverty rate and the highest (top 5 percent) $PM_{2.5}$ mortality risk in 2005. And, we estimated the baseline (2005) $PM_{2.5}$ mortality risk by educational attainment for people living in the highest $PM_{2.5}$ mortality risk counties. In the second step, we estimated the changes in risk for different races among the people living in these ''high-risk'' and ''high risk and high-poverty'' counties resulting from implementation of other existing rules in 2014 and from implementation of just the Transport Rule in 2014. Finally, in the third step, we compared the effects of the Transport Rule by race in the high-risk and high risk/high-poverty counties with the effects on people (by race) living in all other counties.

In 2005, people living in the highest-risk counties and in the high risk/high poverty counties had substantially greater risks of $PM_{2.5}$-related death than people living in the other 95 percent of counties. This was true regardless of race: The difference among races in both groups of counties was very small and dwarfed by the large difference between the two groups of counties for all races. For educational attainment, in contrast, our analysis found that people with less than high school education had significantly greater risks from $PM_{2.5}$ mortality than people with a greater than high school education. This was especially true for people living in the highest-risk counties, but also held true for people living in all other counties. In summary, in 2005, having less than a high school or high school education, living in one of the poorest counties, and living in a high air pollution risk county are associated with higher $PM_{2.5}$ mortality risk; race is not.

Our analysis of the effects of the Transport Rule on this underlying exposure pattern finds that the rule will significantly reduce the $PM_{2.5}$ mortality among all populations of different races living throughout the U.S. compared to both 2005 and 2014 pre-rule (*i.e.,* base case) levels. No group will experience any increases in $PM_{2.5}$ related deaths as a result of implementing the Transport Rule.

The analysis indicates that the populations with the largest improvement (*i.e.,* largest decline) in $PM_{2.5}$ mortality risk as a result of the Transport Rule in 2014 (compared to the base case in 2014) are people living in the highest-risk counties. Among these counties, the largest improvements are for people with less than high school or high school education. These reductions in risk within the highest-risk counties, as well as the reductions in risk within the other 95 percent of counties, are distributed among populations of different races fairly evenly. Therefore, there is no indication that people of particular race receive a greater benefit (or smaller benefit) than others.

The analysis indicates that people living in the high risk/high poverty counties will experience larger improvements in risk from the Transport Rule compared to their counterparts in the other counties. This result suggests that the Transport Rule is providing the greatest risk reduction improvements among counties containing the poorest, and highest risk, populations. There is also little difference in the improvement in risk among races; in other words, people in the high risk/high poverty counties experience the same improvement in risk regardless of race.

The analysis also indicates that this rule, in conjunction with the implementation of existing or proposed rules (*e.g.,* the proposed Mercury and Air Toxics Standards), will reduce the disparity in risk between the highest-risk counties and the other 95 percent of counties for all races and educational levels. In addition, implementation of this Transport Rule and other rules will, together, reduce risks in the poorest and highest risk counties to the approximate level of risk for the rest of the counties before implementation. This analysis is presented in more detail in the RIA for this rule which is available in the rule docket No. EPA–HQ–OAR–2009–0491 and from the main EPA webpage for the rule at *http://www.epa.gov/airtransport.*

3. Meaningful Public Participation

EPA defines ''Environmental Justice'' to include meaningful involvement of all people regardless of race, color, national origin, or income with respect to the development, implementation, and enforcement of environmental laws, regulations, and policies. To promote meaningful involvement, EPA developed a communication and outreach strategy to ensure that interested communities had access to the proposed Transport Rule, were aware of its content, and had an opportunity to comment during the comment period. These efforts are summarized below.

As EPA began considering approaches to address the court remand of the 2005 Clean Air Interstate Rule, long before the rule was proposed, the agency also began gathering input from a large range of stakeholders. In the spring of 2009, EPA held a series of listening sessions to gather information and perspectives from stakeholders prior to the formal start of the rulemaking process. These stakeholders included a number of environmental groups who requested that EPA consider several potential environmental justice issues during development of this rule. In addition, many environmental justice organizations were represented at a November 2009 EPA-Health and Human Services White House Stakeholder Briefing titled, ''The Public Health Benefits of Energy Reform'' in which EPA discussed our intention to propose this rule in the spring of 2010 and participants had the opportunity to respond. Finally, EPA notified Indian Tribes of our intent to propose this rule in the fall of 2009 during a regularly scheduled meeting to update the National Tribal Air Association members of upcoming EPA policies and regulations and to receive input from them on the effects of these efforts in Indian country. These were not opportunities for stakeholders to comment on the specifics of the proposal, as they took place prior to its development, but they provided valuable information that EPA used in developing the proposal.

Just after the rule was proposed in July 2010, EPA presented a summary of information related to the proposed Transport Rule at the National Environmental Justice Advisory Council (NEJAC) meeting in Washington, DC, and responded to questions from NEJAC members regarding the proposed rule. EPA also solicited suggestions for how to engage environmental justice communities during the rule comment period.

During the public comment period, EPA held public hearings in Chicago, Philadelphia, and Atlanta. Each hearing was advertised by EPA through a variety of products targeted to general audiences (*e.g.,* fact sheets, press release, slide presentation, etc.); on EPA's environmental justice listserve; and by non-profit organizations (*e.g.,* American Lung Association). The public hearings were held in public buildings (*i.e.,* no formal identification required to enter or to speak) and were open for 11 hours (9 a.m.–8 p.m.) to accommodate commenters with various work schedules. All three hearings were well-attended by members of the general public. During hearing breaks, EPA staff spent time talking with individuals, including those representing environmental justice organizations or communities, to understand their perspectives in greater detail. As noted above, several commenters at each hearing made comments related to the need to protect communities living near power plants and the most vulnerable

individuals. Some of these commenters specifically mentioned environmental justice; others mentioned issues often of concern to environmental justice communities, such as hot spots, interest in additional emission reductions and greater environmental protection, and concern over the effects of the rule on the most sensitive and vulnerable populations.

In September 2010, during the comment period, EPA held a webinar for EJ communities on the proposed Transport Rule. A presentation tailored for an audience of environmental justice, community, and tribal representatives was specifically designed for this webinar. It was sent to registered participants beforehand and put on the Transport Rule webpage, where it remains posted. The presentation included both information on the context of the rule, plain language information describing the rule itself, and directions on how to comment on the rule.

EPA staff made a short presentation and answered questions about the Transport Rule on a standing bi-monthly community conference call targeted to environmental justice and tribal representatives and organizations. In addition, at the fall 2010 NEJAC meeting in Kansas City, Missouri, EPA provided details of the proposed Transport Rule as part of a larger discussion of a sector-based approach to utility regulation.

Regarding tribal consultation, EPA sent letters to all 565 federally-recognized Tribes in the country offering consultation on the proposed Transport Rule. In addition, the January 7 NODA on allowance allocation methodologies specifically requested comment on allocating allowances to new units in Indian Country. EPA held two consultation and information-sharing calls with 16 interested Tribes in late January and early February 2011. Tribes participating on these consultation and information calls provided comments on the proposed rule and the allowance allocation NODA. As noted above, this additional input from the consultation process was taken into account in the development of the final rule. *See* Section XII.F for more information on tribal consultation.

4. Summary

EPA believes that the vast majority of communities and individuals in areas covered by this rule, including numerous low-income, minority, and tribal individuals and communities in both rural areas and inner cities in the eastern and central U.S., will see significant improvements in air quality and resulting improvements in health. EPA's assessment of the effects of the proposed and final Transport Rules on these communities included: (a) The structure of the rule and responses to comments received on issues specific to these communities; (b) expected SO_2 and NO_X emission reductions; (c) expected $PM_{2.5}$ and ozone air quality improvements; (d) expected health benefits, including asthma and other health effects of particular concern for environmental justice communities; and (e) a quantitative assessment of the expected socioeconomic distribution of a key health benefit (reduction in premature mortality). All of these analyses indicate large health and environmental benefits for these communities; none shows evidence of adverse effects. As a result, EPA concludes that we do not expect disproportionately high and adverse human health or environmental effects on minority, low-income, or tribal populations in the United States as a result of implementing this final Transport Rule.

K. Congressional Review Act

The Congressional Review Act, 5 U.S.C. 801 *et seq.,* as added by the Small Business Regulatory Enforcement Fairness Act of 1996, generally provides that before a rule may take effect, the agency promulgating the rule must submit a rule report, which includes a copy of the rule, to each House of the Congress and to the Comptroller General of the United States. EPA will submit a report containing this rule and other required information to the U.S. Senate, the U.S. House of Representatives, and the Comptroller General of the United States prior to publication of the rule in the **Federal Register**. A major rule cannot take effect until 60 days after it is published in the **Federal Register**. This action is a ''major rule'' as defined by 5 U.S.C. 804(2). This rule will be effective October 7, 2011.

L. Judicial Review

Petitions for judicial review of this action must be filed in the United States Court of Appeals for the District of Columbia Circuit by October 7, 2011. Section 307(b)(1) of the CAA indicates which Federal Courts of Appeal have venue for petitions of review of final actions by EPA. This section provides, in part, that petitions for review must be filed in the Court of Appeals for the District of Columbia Circuit if (i) the agency action consists of ''nationally applicable regulations promulgated, or final action taken, by the Administrator,'' or (ii) such action is locally or regionally applicable, if ''such action is based on a determination of nationwide scope or effect and if in taking such action the Administrator finds and publishes that such action is based on such a determination.''

Any final action related to the Transport Rule is ''nationally applicable'' within the meaning of section 307(b)(1). Through this rule, EPA interprets section 110 of the CAA, a provision which has nationwide applicability. In addition, the Transport Rule applies to 27 States. The Transport Rule is also based on a common core of factual findings and analyses concerning the transport of pollutants between the different states subject to it. For these reasons, the Administrator also is determining that any final action regarding the Transport Rule is of nationwide scope and effect for purposes of section 307(b)(1). Thus, pursuant to section 307(b) any petitions for review of final actions regarding the Transport Rule must be filed in the Court of Appeals for the District of Columbia Circuit within 60 days from the date final action is published in the **Federal Register**.

Filing a petition for reconsideration of this action does not affect the finality of this rule for the purposes of judicial review nor does it extend the time within which a petition for judicial review may be filed and shall not postpone the effectiveness of such rule or action. In addition, pursuant to CAA section 307(b)(2) this action may not be challenged later in proceedings to enforce its requirements.

In addition, this action is subject to the provisions of section 307(d). CAA section 307(d)(1)(B) provides that section 307(d) applies to, among other things, to ''the promulgation or revision of an implementation plan by the Administrator under CAA section 110(c)'' (42 U.S.C. 7407(d)(1)(B)). The Agency has complied with procedural requirements of CAA section 307(d) during the course of this rulemaking.

List of Subjects

40 CFR Part 51

Administrative practice and procedure, Air pollution control, Incorporation by reference, Intergovernmental relations, Nitrogen oxides, Ozone, Particulate matter, Regional haze, Reporting and recordkeeping requirements, Sulfur dioxide.

40 CFR Part 52

Administrative practice and procedure, Air pollution control, Incorporation by reference, Intergovernmental relations, Nitrogen

oxides, Ozone, Particulate matter, Regional haze, Reporting and recordkeeping requirements, Sulfur dioxide.

40 CFR Part 72

Acid rain, Administrative practice and procedure, Air pollution control, Electric utilities, Incorporation by reference, Intergovernmental relations, Nitrogen oxides, Reporting and recordkeeping requirements, Sulfur dioxide.

40 CFR Part 78

Acid rain, Administrative practice and procedure, Air pollution control, Electric utilities, Intergovernmental relations, Nitrogen oxides, Reporting and recordkeeping requirements, Sulfur dioxide.

40 CFR Part 97

Administrative practice and procedure, Air pollution control, Electric utilities, Nitrogen oxides, Reporting and recordkeeping requirements, Sulfur dioxide.

Dated: July 6, 2011.

Lisa P. Jackson,

Administrator.

For the reasons set forth in the preamble, parts 51, 52, 72, 78, and 97 of chapter I of title 40 of the Code of Federal Regulations are amended as follows:

PART 51—[AMENDED]

■ 1. The authority citation for part 51 continues to read as follows:

Authority: 23 U.S.C. 101; 42 U.S.C. 7401–7671q.

§ 51.121 [Amended]

■ 2. In § 51.121 paragraph (r)(2) is amended by removing the words ''§ 51.123(bb)'' and adding, in their place, the words ''§ 51.123(bb) with regard to an ozone season that occurs before January 1, 2012''.

■ 3. Section 51.123 is amended by adding a new paragraph (ff) to read as follows:

§ 51.123 Findings and requirements for submission of State implementation plan revisions relating to emissions of oxides of nitrogen pursuant to the Clean Air Interstate Rule.

* * * * *

(ff) Notwithstanding any provisions of paragraphs (a) through (ee) of this section, subparts AA through II and AAAA through IIII of part 96 of this chapter, subparts AA through II and AAAA through IIII of part 97 of this chapter, and any State's SIP to the contrary:

(1) With regard to any control period that begins after December 31, 2011, the Administrator:

(i) Rescinds the determination in paragraph (a) of this section that the States identified in paragraph (c) of this section must submit a SIP revision with respect to the fine particles ($PM_{2.5}$) NAAQS and the 8-hour ozone NAAQS meeting the requirements of paragraphs (b) through (ee) of this section; and

(ii) Will not carry out any of the functions set forth for the Administrator in subparts AA through II and AAAA through IIII of part 96 of this chapter, subparts AA through II and AAAA through IIII of part 97 of this chapter, or in any emissions trading program provisions in a State's SIP approved under this section;

(2) The Administrator will not deduct for excess emissions any CAIR NO_X allowances or CAIR NO_X Ozone Season allowances allocated for 2012 or any year thereafter;

(3) By November 7, 2011, the Administrator will remove from the CAIR NO_X Allowance Tracking System accounts all CAIR NO_X allowances allocated for a control period in 2012 and any subsequent year, and, thereafter, no holding or surrender of CAIR NO_X allowances will be required with regard to emissions or excess emissions for such control periods; and

(4) By November 7, 2011, the Administrator will remove from the CAIR NO_X Ozone Season Allowance Tracking System accounts all CAIR NO_X Ozone Season allowances allocated for a control period in 2012 and any subsequent year, and, thereafter, no holding or surrender of CAIR NO_X Ozone Season allowances will be required with regard to emissions or excess emissions for such control periods.

■ 4. Section 51.124 is amended by adding a new paragraph (s) to read as follows:

§ 51.124 Findings and requirements for submission of State implementation plan revisions relating to emissions of sulfur dioxide pursuant to the Clean Air Interstate Rule.

* * * * *

(s) Notwithstanding any provisions of paragraphs (a) through (r) of this section, subparts AAA through III of part 96 of this chapter, subparts AAA through III of part 97 of this chapter, and any State's SIP to the contrary:

(1) With regard to any control period that begins after December 31, 2011, the Administrator:

(i) Rescinds the determination in paragraph (a) of this section that the States identified in paragraph (c) of this section must submit a SIP revision with respect to the fine particles ($PM_{2.5}$) NAAQS meeting the requirements of paragraphs (b) through (r) of this section; and

(ii) Will not carry out any of the functions set forth for the Administrator in subparts AAA through III of part 96 of this chapter, subparts AAA through III of part 97 of this chapter, or in any emissions trading program in a State's SIP approved under this section; and

(2) The Administrator will not deduct for excess emissions any CAIR SO_2 allowances allocated for 2012 or any year thereafter.

§ 51.125 [Reserved]

■ 5. Section 51.125 is removed and reserved.

PART 52—[AMENDED]

■ 6. The authority citation for part 52 continues to read as follows:

Authority: 42 U.S.C. 7401, *et seq.*

Subpart A—General Provisions

■ 7. Section 52.35 is amended by adding a new paragraph (f) to read as follows:

§ 52.35 What are the requirements of the Federal Implementation Plans (FIPs) for the Clean Air Interstate Rule (CAIR) relating to emissions of nitrogen oxides?

* * * * *

(f) Notwithstanding any provisions of paragraphs (a) through (d) of this section, subparts AA through II and AAAA through IIII of part 97 of this chapter, and any State's SIP to the contrary:

(1) With regard to any control period that begins after December 31, 2011,

(i) The provisions in paragraphs (a) through (d) of this section relating to NO_X annual or ozone season emissions shall not be applicable; and

(ii) The Administrator will not carry out any of the functions set forth for the Administrator in subparts AA through II and AAAA through IIII of part 97 of this chapter;

(2) The Administrator will not deduct for excess emissions any CAIR NO_X allowances or CAIR NO_X Ozone Season allowances allocated for 2012 or any year thereafter;

(3) By November 7, 2011, the Administrator will remove from the CAIR NO_X Allowance Tracking System accounts all CAIR NO_X allowances allocated for a control period in 2012 and any subsequent year, and, thereafter, no holding or surrender of CAIR NO_X allowances will be required with regard to emissions or excess emissions for such control periods; and

(4) By November 7, 2011, the Administrator will remove from the CAIR NO_X Ozone Season Allowance Tracking System accounts all CAIR NO_X Ozone Season allowances allocated for a control period in 2012 and any subsequent year, and, thereafter, no holding or surrender of CAIR NO_X allowances will be required with regard to emissions or excess emissions for such control periods.

■ 8. Section 52.36 is amended by adding a new paragraph (e) to read as follows:

§ 52.36 What are the requirements of the Federal Implementation Plans (FIPs) for the Clean Air Interstate Rule (CAIR) relating to emissions of sulfur dioxide?

* * * * *

(e) Notwithstanding any provisions of paragraphs (a) through (c) of this section, subparts AAA through III of part 97 of this chapter and any State's SIP to the contrary:

(1) With regard to any control period that begins after December 31, 2011,

(i) The provisions of paragraphs (a) through (e) of this section relating to SO_2 emissions shall not be applicable; and

(ii) The Administrator will not carry out any of the functions set forth for the Administrator in subparts AAA through III of part 97 of this chapter; and

(2) The Administrator will not deduct for excess emissions any CAIR SO_2 allowances allocated for 2012 or any year thereafter.

■ 9. Sections §§ 52.38 and 52.39 are added to subpart A to read as follows:

§ 52.38 What are the requirements of the Federal Implementation Plans (FIPs) under the Transport Rule (TR) relating to emissions of nitrogen oxides?

(a)(1) The TR NO_X Annual Trading Program provisions set forth in subpart AAAAA of part 97 of this chapter constitute the TR Federal Implementation Plan provisions that relate to annual emissions of nitrogen oxides (NO_X).

(2) The provisions of subpart AAAAA of part 97 of this chapter apply to the sources in the following States and Indian country located within the borders of such States: Alabama, Georgia, Illinois, Indiana, Iowa, Kansas, Kentucky, Maryland, Michigan, Minnesota, Missouri, Nebraska, New Jersey, New York, North Carolina, Ohio, Pennsylvania, South Carolina, Tennessee, Texas, Virginia, West Virginia, and Wisconsin.

(3) Notwithstanding the provisions of paragraph (a)(1) of this section, a State listed in paragraph (a)(2) of this section may adopt and include in a SIP revision, and the Administrator will approve, as TR NO_X Annual allowance allocation provisions replacing the provisions in § 97.411(a) of this chapter with regard to the State and the control period in 2013, a list of TR NO_X Annual units and the amount of TR NO_X Annual allowances allocated to each unit on such list, provided that the list of units and allocations meets the following requirements:

(i) All of the units on the list must be units that are in the State and commenced commercial operation before January 1, 2010;

(ii) The total amount of TR NO_X Annual allowance allocations on the list must not exceed the amount, under § 97.410(a) of this chapter for the State and the control period in 2013, of TR NO_X Annual trading budget minus the sum of the new unit set-aside and Indian country new unit set-aside;

(iii) The list must be submitted electronically in a format specified by the Administrator; and

(iv) The SIP revision must not provide for any change in the units and allocations on the list after approval of the SIP revision by the Administrator and must not provide for any change in any allocation determined and recorded by the Administrator under subpart AAAAA of part 97 of this chapter;

(v) Provided that:

(A) By October 17, 2011, the State must notify the Administrator electronically in a format specified by the Administrator of the State's intent to submit to the Administrator a complete SIP revision meeting the requirements of paragraph (a)(3)(i) through (iv) of this section by April 1, 2012; and

(B) The State must submit to the Administrator a complete SIP revision described in paragraph (a)(3)(v)(A) of this section by April 1, 2012.

(4) Notwithstanding the provisions of paragraph (a)(1) of this section, a State listed in paragraph (a)(2) of this section may adopt and include in a SIP revision, and the Administrator will approve, regulations revising subpart AAAAA of part 97 of this chapter as follows and not making any other substantive revisions of that subpart:

(i) The State may adopt, as TR NO_X Annual allowance allocation or auction provisions replacing the provisions in §§ 97.411(a) and (b)(1) and 97.412(a) of this chapter with regard to the State and the control period in 2014 or any subsequent year, any methodology under which the State or the permitting authority allocates or auctions TR NO_X Annual allowances, and may adopt, in addition to the definitions in § 97.402 of this chapter, one or more definitions that shall apply only to terms as used in the adopted TR NO_X Annual allowance allocation or auction provisions, if such methodology—

(A) Requires the State or the permitting authority to allocate and, if applicable, auction a total amount of TR NO_X Annual allowances for any such control period not exceeding the amount, under §§ 97.410(a) and 97.421 of this chapter for the State and such control period, of the TR NO_X Annual trading budget minus the sum of the Indian country new unit set-aside and the amount of any TR NO_X Annual allowances already allocated and recorded by the Administrator.

(B) Requires, to the extent the State adopts provisions for allocations or auctions of TR NO_X Annual allowances for any such control period to any TR NO_X Annual units covered by § 97.411(a) of this chapter, that the State or the permitting authority submit such allocations or the results of such auctions for such control period (except allocations or results of auctions to such units of TR NO_X Annual allowances remaining in a set-aside after completion of the allocations or auctions for which the set-aside was created) to the Administrator no later than the following dates:

Year of the control period for which TR NO_X annual allowances are allocated or auctioned	Deadline for submission of allocations or auction results to administrator
2014	June 1, 2013.
2015	June 1, 2013.
2016	June 1, 2014.
2017	June 1, 2014.
2018	June 1, 2015.
2019	June 1, 2015.
2020 and any year thereafter.	June 1 of the fourth year before the year of the control period.

(C) Requires, to the extent the State adopts provisions for allocations or auctions of TR NO_X Annual allowances for any such control period to any TR NO_X Annual units covered by §§ 97.411(b)(1) and 97.412(a) of this chapter, that the State or the permitting authority submit such allocations or the results of such auctions (except allocations or results of auctions to such units of TR NO_X Annual allowances remaining in a set-aside after completion of the allocations or auctions for which the set-aside was created) to the Administrator by July 1 of the year of such control period.

(D) Does not provide for any change, after the submission deadlines in paragraphs (a)(4)(i)(B) and (C) of this section, in the allocations submitted to the Administrator by such deadlines and does not provide for any change in

any allocation determined and recorded by the Administrator under subpart AAAAA of part 97 of this chapter;

(ii) Provided that the State must submit a complete SIP revision meeting the requirements of paragraph (a)(4)(i) of this section by December 1 of the year before the year of the deadlines for submission of allocations or auction results under paragraphs (a)(4)(i)(B) and (C) of this section for the first control period for which the State wants to make allocations or hold an auction under paragraph (a)(4)(i) of this section.

(5) Notwithstanding the provisions of paragraph (a)(1) of this section, a State listed in paragraph (a)(2) of this section may adopt and include in a SIP revision, and the Administrator will approve, as correcting in whole or in part, as appropriate, the deficiency in the SIP that is the basis for the TR Federal Implementation Plan set forth in paragraphs (a)(1) through (4) of this section, regulations that are substantively identical to the provisions of the TR NO_X Annual Trading Program set forth in §§ 97.402 through 97.435 of this chapter, except that the SIP revision:

(i) May adopt, as TR NO_X Annual allowance allocation or auction provisions replacing the provisions in §§ 97.411(a) and (b)(1) and 97.412(a) of this chapter with regard to the State and the control period in 2014 or any subsequent year, any methodology under which the State or the permitting authority allocates or auctions TR NO_X Annual allowances and that—

(A) Requires the State or the permitting authority to allocate and, if applicable, auction a total amount of TR NO_X Annual allowances for any such control period not exceeding the amount, under §§ 97.410(a) and 97.421 of this chapter for the State and such control period, of the TR NO_X Annual trading budget minus the sum of the Indian country new unit set-aside and the amount of any TR NO_X Annual allowances already allocated and recorded by the Administrator.

(B) Requires, to the extent the State adopts provisions for allocations or auctions of TR NO_X Annual allowances for any such control period to any TR NO_X Annual units covered by § 97.411(a) of this chapter, that the State or the permitting authority submit such allocations or the results of such auctions for such control period (except allocations or results of auctions to such units of TR NO_X Annual allowances remaining in a set-aside after completion of the allocations or auctions for which the set-aside was created) to the Administrator no later than the following dates:

Year of the control period for which TR NO_X annual allowances are allocated or auctioned	Deadline for submission of allocations or auction results to administrator
2014	June 1, 2013.
2015	June 1, 2013.
2016	June 1, 2014.
2017	June 1, 2014.
2018	June 1, 2015.
2019	June 1, 2015.
2020 and any year thereafter.	June 1 of the fourth year before the year of the control period.

(C) Requires, to the extent the State adopts provisions for allocations or auctions of TR NO_X Annual allowances for any such control period to any TR NO_X Annual units covered by §§ 97.411(b)(1) and 97.412(a) of this chapter, that the State or the permitting authority submit such allocations or the results of such auctions (except allocations or results of auctions to such units of TR NO_X Annual allowances remaining in a set-aside after completion of the allocations or auctions for which the set-aside was created) to the Administrator by July 1 of the year of such control period.

(D) Does not provide for any change, after the submission deadlines in paragraphs (a)(5)(i)(B) and (C) of this section, in the allocations submitted to the Administrator by such deadlines and does not provide for any change in any allocation determined and recorded by the Administrator under subpart AAAAA of part 97 of this chapter;

(ii) May adopt, in addition to the definitions in § 97.402 of this chapter, one or more definitions that shall apply only to terms as used in the TR NO_X Annual allowance allocation or auction provisions adopted under paragraph (a)(5)(i) of this section;

(iii) May substitute the name of the State for the term ''State'' as used in subpart AAAAA of part 97 of this chapter, to the extent the Administrator determines that such substitutions do not make substantive changes in the provisions in §§ 97.402 through 97.435 of this chapter; and

(iv) Must not include any of the references to, or requirements imposed on, any unit in Indian country within the borders of the State in the provisions in §§ 97.402 through 97.435 of this chapter and must not include the provisions in §§ 97.411(b)(2) and 97.412(b), all of which provisions will continue to apply under the portion of the TR Federal Implementation Plan that is not replaced by the SIP revision;

(v) Provided that, if and when any covered unit is located in Indian country within the borders of the State, the Administrator may modify his or her approval of the SIP revision to exclude the provisions in §§ 97.402 (definitions of ''common designated representative'', ''common designated representative's assurance level'', and ''common designated representative's share''), 97.406(c)(2), 97.425, and the portions of other provisions referencing these sections and may modify the portion of the TR Federal Implementation Plan that is not replaced by the SIP revision to include these provisions;

(vi) Provided that the State must submit a complete SIP revision meeting the requirements of paragraphs (a)(5)(i) through (iv) of this section by December 1 of the year before the year of the deadlines for submission of allocations or auction results under paragraphs (a)(5)(i)(B) and (C) of this section applicable to the first control period for which the State wants to make allocations or hold an auction under paragraphs (a)(5)(i) and (ii) of this section.

(6) Following promulgation of an approval by the Administrator of a State's SIP revision as correcting in whole or in part, as appropriate, the SIP's deficiency that is the basis for the TR Federal Implementation Plan described in paragraphs (a)(1) through (5) of this section, the provisions of paragraph (a)(2) of this section will no longer apply to the sources in the State, unless the Administrator's approval of the SIP revision is partial or conditional, and will continue to apply to sources in any Indian country within the borders of the State.

(7) Notwithstanding the provisions of paragraph (a)(6) of this section, if, at the time of such approval of the State's SIP revision, the Administrator has already started recording any allocations of TR NO_X Annual allowances under subpart AAAAA of part 97 of this chapter to units in a State for a control period in any year, the provisions of subpart AAAAA of part 97 of this chapter authorizing the Administrator to complete the allocation and recordation of TR NO_X Annual allowances to units in the State for each such control period shall continue to apply, unless provided otherwise by such approval of the State's SIP revision.

(b)(1) The TR NO_X Ozone Season Trading Program provisions set forth in part 97 of this chapter constitute the TR Federal Implementation Plan provisions that relate to emissions of NO_X during the ozone season, defined as May 1 through September 30 of a calendar year.

(2) The provisions of subpart BBBBB of part 97 of this chapter apply to

sources in each of the following States and Indian country located within the borders of such States: Alabama, Arkansas, Florida, Georgia, Illinois, Indiana, Kentucky, Louisiana, Maryland, Mississippi, New Jersey, New York, North Carolina, Ohio, Pennsylvania, South Carolina, Tennessee, Texas, Virginia, and West Virginia.

(3) Notwithstanding the provisions of paragraph (b)(1) of this section, a State listed in paragraph (b)(2) of this section may adopt and include in a SIP revision, and the Administrator will approve, as TR NO_X Ozone Season allowance allocation provisions replacing the provisions in § 97.511(a) of this chapter with regard to the State and the control period in 2013, a list of TR NO_X Ozone Season units and the amount of TR NO_X Ozone Season allowances allocated to each unit on such list, provided that the list of units and allocations meets the following requirements:

(i) All of the units on the list must be units that are in the State and commenced commercial operation before January 1, 2010;

(ii) The total amount of TR NO_X Ozone Season allowance allocations on the list must not exceed the amount, under § 97.510(a) of this chapter for the State and the control period in 2013, of TR NO_X Ozone Season trading budget minus the sum of the new unit set-aside and Indian country new unit set-aside;

(iii) The list must be submitted electronically in a format specified by the Administrator; and

(iv) The SIP revision must not provide for any change in the units and allocations on the list after approval of the SIP revision by the Administrator and must not provide for any change in any allocation determined and recorded by the Administrator under subpart BBBBB of part 97 of this chapter;

(v) Provided that:

(A) By October 17, 2011, the State must notify the Administrator electronically in a format specified by the Administrator of the State's intent to submit to the Administrator a complete SIP revision meeting the requirements of paragraph (b)(3)(i) through (iv) of this section by April 1, 2012; and

(B) The State must submit to the Administrator a complete SIP revision described in paragraph (b)(3)(v)(A) of this section by April 1, 2012.

(4) Notwithstanding the provisions of paragraph (b)(1) of this section, a State listed in paragraph (b)(2) of this section may adopt and include in a SIP revision, and the Administrator will approve, regulations revising subpart BBBBB of part 97 of this chapter as follows and not making any other substantive revisions of that subpart:

(i) The State may adopt, as applicability provisions replacing the provisions in §§ 97.504(a)(1) and (2) of this chapter, provisions substantively identical to those provisions, except that the words ''more than 25 MWe'' are replaced, whenever such words appear, by words specifying a uniform lower limit on the amount of megawatts that is not greater than the amount specified by the words ''more than 25 MWe'' and is not less than the amount specified by the words ''15 MWe or more''; or

(ii) The State may adopt, as TR NO_X Ozone Season allowance allocation or auction provisions replacing the provisions in §§ 97.511(a) and (b)(1) and 97.512(a) of this chapter with regard to the control period in 2014 or any subsequent year, any methodology under which the State or the permitting authority allocates or auctions TR NO_X Ozone Season allowances, and may adopt, in addition to the definitions in § 97.502 of this chapter, one or more definitions that shall apply only to terms as used in the adopted TR NO_X Ozone Season allowance allocation or auction provisions, if such methodology—

(A) Requires the State or the permitting authority to allocate and, if applicable, auction a total amount of TR NO_X Ozone Season allowances for any such control period not exceeding the amount, under §§ 97.510(a) and 97.521 of this chapter for the State and such control period, of the TR NO_X Ozone Season trading budget minus the sum of the Indian country new unit set-aside and the amount of any TR NO_X Ozone Season allowances already allocated and recorded by the Administrator.

(B) Requires, to the extent the State adopts provisions for allocations or auctions of TR NO_X Ozone Season allowances for any such control period to any TR NO_X Ozone Season units covered by § 97.511(a) of this chapter, that the State or the permitting authority submit such allocations or the results of such auctions for such control period (except allocations or results of auctions to such units of TR NO_X Ozone Season allowances remaining in a set-aside after completion of the allocations or auctions for which the set-aside was created) to the Administrator no later than the following dates:

Year of the control period for which TR NO_X Ozone Season allowances are allocated or auctioned	Deadline for submission of allocations or auction results to administrator
2014	June 1, 2013.
2015	June 1, 2013.
2016	June 1, 2014.
2017	June 1, 2014.
2018	June 1, 2015.
2019	June 1, 2015.
2020 and any year thereafter.	June 1 of the fourth year before the year of the control period.

(C) Requires, to the extent the State adopts provisions for allocations or auctions of TR NO_X Ozone Season allowances for any such control period to any TR NO_X Ozone Season units covered by §§ 97.511(b)(1) and 97.512(a) of this chapter, that the State or the permitting authority submit such allocations or the results of such auctions (except allocations or results of auctions to such units of TR NO_X Ozone Season allowances remaining in a set-aside after completion of the allocations or auctions for which the set-aside was created) to the Administrator by July 1 of the year of such control period.

(D) Does not provide for any change, after the submission deadlines in paragraphs (b)(4)(ii)(B) and (C) of this section, in the allocations submitted to the Administrator by such deadlines and does not provide for any change in any allocation determined and recorded by the Administrator under subpart BBBBB of part 97 of this chapter;

(iii) Provided that the State must submit a complete SIP revision meeting the requirements of paragraph (b)(4)(i) or (ii) of this section by December 1 of the year before the year of the deadlines for submission of allocations or auction results under paragraphs (b)(4)(ii)(B) and (C) of this section applicable to the first control period for which the State wants to replace the applicability provisions, make allocations, or hold an auction under paragraph (b)(4)(i) or (ii) of this section.

(5) Notwithstanding the provisions of paragraph (b)(1) of this section, a State listed in paragraph (b)(2) of this section may adopt and include in a SIP revision, and the Administrator will approve, as correcting in whole or in part, as appropriate, the deficiency in the SIP that is the basis for the TR Federal Implementation Plan set forth in paragraphs (b)(1) through (4) of this section, regulations that are substantively identical to the provisions of the TR NO_X Ozone Season Trading Program set forth in §§ 97.502 through 97.535 of this chapter, except that the SIP revision:

(i) May adopt, as applicability provisions replacing the provisions in §§ 97.504(a)(1) and (2) of this chapter, provisions substantively identical to those provisions, except that the words ''more than 25 MWe'' are replaced, whenever such words appear, by words specifying a uniform lower limit on the amount of megawatts that is not greater than the amount specified by the words ''more than 25 MWe'' and is not less than the amount specified by the words ''15 MWe or more''; or

(ii) May adopt, as TR NO_X Ozone Season allowance allocation provisions replacing the provisions in §§ 97.511(a) and (b)(1) and 97.512(a) of this chapter with regard to the control period in 2014 and any subsequent year, any methodology under which the State or the permitting authority allocates auctions TR NO_X Ozone Season allowances and that—

(A) Requires the State or the permitting authority to allocate and, if applicable, auction a total amount of TR NO_X Ozone Season allowances for any such control period not exceeding the amount, under §§ 97.510(a) and 97.521 of this chapter for the State and such control period, of the TR NO_X Ozone Season trading budget minus the sum of the Indian country new unit set-aside and the amount of any TR NO_X Ozone Season allowances already allocated and recorded by the Administrator.

(B) Requires, to the extent the State adopts provisions for allocations or auction of TR NO_X Ozone Season allowances for any such control period to any TR NO_X Ozone Season units covered by § 97.511(a) of this chapter, that the State or the permitting authority submit such allocations or the results of such auctions for such control period (except allocations or results of auctions to such units of TR NO_X Ozone Season allowances remaining in a set-aside after completion of the allocations or auctions for which the set-aside was created) to the Administrator no later than the following dates:

Year of the control period for which TR NO_X Ozone Season allowances are allocated or auctioned	Deadline for submission of allocations or auction results to administrator
2014	June 1, 2013.
2015	June 1, 2013.
2016	June 1, 2014.
2017	June 1, 2014.
2018	June 1, 2015.
2019	June 1, 2015.
2020 and any year thereafter.	June 1 of the fourth year before the year of the control period.

(C) Requires, to the extent the State adopts provisions for allocations or auctions of TR NO_X Ozone Season allowances for any control period to any TR NO_X Ozone Season units covered by §§ 97.511(b)(1) and 97.512(a) of this chapter, that the State or the permitting authority submit such allocations or the results of such auctions (except allocations or results of auctions to such units of TR NO_X Ozone Season allowances remaining in a set-aside after completion of the allocations or auctions for which the set-aside was created) to the Administrator by July 1 of the year of such control period.

(D) Does not provide for any change, after the submission deadlines in paragraphs (b)(5)(ii)(B) and (C) of this section, in the allocations submitted to the Administrator by such deadlines and does not provide for any change in any allocation determined and recorded by the Administrator under subpart BBBBB of part 97 of this chapter;

(iii) May adopt in addition to the definitions in § 97.502 of this chapter, one or more definitions that shall apply only to terms as used in the TR NO_X Ozone Season allowance allocation or auction provisions adopted under paragraph (b)(5)(ii) of this section;

(iv) May substitute the name of the State for the term ''State'' as used in subpart BBBBB of part 97 of this chapter, to the extent the Administrator determines that such substitutions do not make substantive changes in the provisions in §§ 97.502 through 97.535 of this chapter; and

(v) Must not include any of the references to, or requirements imposed on, any unit in Indian country within the borders of the State in the provisions in §§ 97.502 through 97.535 of this chapter and must not include the provisions in §§ 97.511(b)(2) and 97.512(b), all of which provisions will continue to apply under the portion of the TR Federal Implementation Plan that is not replaced by the SIP revision;

(vi) Provided that, if and when any covered unit is located in Indian country within the borders of the State, the Administrator may modify his or her approval of the SIP revision to exclude the provisions in §§ 97.502 (definitions of ''common designated representative'', ''common designated representative's assurance level'', and ''common designated representative's share''), 97.506(c)(2), 97.525, and the portions of other provisions referencing these sections and may modify the portion of the TR Federal Implementation Plan that is not replaced by the SIP revision to include these provisions;

(vii) Provided that the State must submit a complete SIP revision meeting the requirements of paragraph (b)(5)(i) through (v) of this section by December 1 of the year before the year of the deadlines for submission of allocations or auction results under paragraphs (5)(ii)(B) and (C) of this section applicable to the first control period for which the State wants to replace the applicability provisions, make allocations, or hold an auction under paragraphs (b)(5)(ii) and (iii) of this section.

(6) Following promulgation of an approval by the Administrator of a State's SIP revision as correcting in whole or in part, as appropriate, the SIP's deficiency that is the basis for the TR Federal Implementation Plan set forth in paragraphs (b)(1) through (5) of this section, the provisions of paragraph (b)(2) of this section will no longer apply to sources in the State, unless the Administrator's approval of the SIP revision is partial or conditional, and will continue to apply to sources in any Indian country within the borders of the State.

(7) Notwithstanding the provisions of paragraph (b)(6) of this section, if, at the time of such approval of the State's SIP revision, the Administrator has already started recording any allocations of TR NO_X Ozone Season allowances under subpart BBBBB of part 97 of this chapter to units in a State for a control period in any year, the provisions of subpart BBBBB of part 97 of this chapter authorizing the Administrator to complete the allocation and recordation of TR NO_X Ozone Season allowances to units in the State for each such control period shall continue to apply, unless provided otherwise by such approval of the State's SIP revision.

§ 52.39 What are the requirements of the Federal Implementation Plans (FIPs) for the Transport Rule (TR) relating to emissions of sulfur dioxide?

(a) The TR SO_2 Group 1 Trading Program provisions and the TR SO_2 Group 2 Trading Program provisions set forth respectively in subparts CCCCC and DDDDD of part 97 of this chapter constitute the TR Federal Implementation Plan provisions that relate to emissions of sulfur dioxide (SO_2).

(b) The provisions of subpart CCCCC of part 97 of this chapter apply to sources in each of the following States and Indian country located within the borders of such States: Illinois, Indiana, Iowa, Kentucky, Maryland, Michigan, Missouri, New Jersey, New York, North Carolina, Ohio, Pennsylvania, Tennessee, Virginia, West Virginia, and Wisconsin.

(c) The provisions of subpart DDDDD of part 97 of this chapter apply to sources in each of the following States and Indian country located within the borders of such States: Alabama, Georgia, Kansas, Minnesota, Nebraska, South Carolina, and Texas.

(d) Notwithstanding the provisions of paragraph (a) of this section, a State listed in paragraph (b) of this section may adopt and include in a SIP revision, and the Administrator will approve, as TR SO_2 Group 1 allowance allocation provisions replacing the provisions in § 97.611(a) of this chapter with regard to the State and the control period in 2013, a list of TR SO_2 Group 1 units and the amount of TR SO_2 Group 1 allowances allocated to each unit on such list, provided that the list of units and allocations meets the following requirements:

(1) All of the units on the list must be units that are in the State and commenced commercial operation before January 1, 2010;

(2) The total amount of TR SO_2 Group 1 allowance allocations on the list must not exceed the amount, under § 97.610(a) of this chapter for the State and the control period in 2013, of TR SO_2 Group 1 trading budget minus the sum of the new unit set-aside and Indian country new unit set-aside;

(3) The list must be submitted electronically in a format specified by the Administrator; and

(4) The SIP revision must not provide for any change in the units and allocations on the list after approval of the SIP revision by the Administrator and must not provide for any change in any allocation determined and recorded by the Administrator under subpart CCCCC of part 97 of this chapter;

(5) Provided that:

(i) By October 17, 2011, the State must notify the Administrator electronically in a format specified by the Administrator of the State's intent to submit to the Administrator a complete SIP revision meeting the requirements of paragraph (d)(1) through (4) of this section by April 1, 2012; and

(ii) The State must submit to the Administrator a complete SIP revision described in paragraph (d)(5)(i) of this section by April 1, 2012.

(e) Notwithstanding the provisions of paragraph (a) of this section, a State listed in paragraph (b) of this section may adopt and include in a SIP revision, and the Administrator will approve, regulations revising subpart CCCCC of part 97 of this chapter as follows and not making any other substantive revisions of that subpart:

(1) The State may adopt, as TR SO_2 Group 1 allowance allocation or auction provisions replacing the provisions in §§ 97.611(a) and (b)(1) and 97.612(a) of this chapter with regard to the control period in 2014 or any subsequent year, any methodology under which the State or the permitting authority allocates or auctions TR SO_2 Group 1 allowances and may adopt, in addition to the definitions in § 97.602 of this chapter, one or more definitions that shall apply only to terms as used in the adopted TR SO_2 Group 1 allowance allocation or auction provisions, if such methodology—

(i) Requires the State or the permitting authority to allocate and, if applicable, auction a total amount of TR SO_2 Group 1 allowances for any such control period not exceeding the amount, under §§ 97.610(a) and 97.621 of this chapter for the State and such control period, of the TR SO_2 Group 1 trading budget minus the sum of the Indian country new unit set-aside and the amount of any TR SO_2 Group 1 allowances already allocated and recorded by the Administrator.

(ii) Requires, to the extent the State adopts provisions for allocations or auction of TR SO_2 Group 1 allowances for any such control period to any TR SO_2 Group 1 units covered by § 97.611(a) of this chapter, that the State or the permitting authority submit such allocations or the results of such auctions for such control period (except allocations or results of auctions to such units of TR SO_2 Group 1 allowances remaining in a set-aside after completion of the allocations or auctions for which the set-aside was created) to the Administrator no later than the following dates:

Year of the control period for which TR SO_2 Group 1 allowances are allocated or auctioned	Deadline for submission of allocations or auction results to administrator
2014	June 1, 2013.
2015	June 1, 2013.
2016	June 1, 2014.
2017	June 1, 2014.
2018	June 1, 2015.
2019	June 1, 2015.
2020 and any year thereafter.	June 1 of the fourth year before the year of the control period.

(iii) Requires, to the extent the State adopts provisions for allocations or auctions of TR SO_2 Group 1 allowances for any such control period to any TR SO_2 Group 1 units covered by §§ 97.611(b)(1) and 97.612(a) of this chapter, that the State or the permitting authority submit such allocations or the results of such auctions (except allocations or results of auctions to such units of TR SO_2 Group 1 allowances remaining in a set-aside after completion of the allocations or auctions for which the set-aside was created) to the Administrator by July 1 of the year of such control period.

(iv) Does not provide for any change, after the submission deadlines in paragraphs (e)(1)(ii) and (iii) of this section, in the allocations submitted to the Administrator by such deadlines and does not provide for any change in any allocation determined and recorded by the Administrator under subpart CCCCC of part 97 of this chapter;

(2) Provided that the State must submit a complete SIP revision meeting the requirements of paragraph (e)(1) of this section by December 1 of the year before the year of the deadlines for submission of allocations or auction results under paragraphs (e)(1)(ii) and (iii) of this section applicable to the first control period for which the State wants to make allocations or hold an auction under paragraph (e)(1) of this section.

(f) Notwithstanding the provisions of paragraph (a) of this section, a State listed in paragraph (b) of this section may adopt and include in a SIP revision, and the Administrator will approve, as correcting in whole or in part, as appropriate, the deficiency in the SIP that is the basis for the TR Federal Implementation Plan set forth in paragraphs (a), (b), (d), and (e) of this section, regulations that are substantively identical to the provisions of the TR SO_2 Group 1 Trading Program set forth in §§ 97.602 through 97.635 of this chapter, except that the SIP revision:

(1) May adopt, as TR SO_2 Group 1 allowance allocation or auction provisions replacing the provisions in §§ 97.611(a) and (b)(1) and 97.612(a) of this chapter with regard to the control period in 2014 and any subsequent year, any methodology under which the State or the permitting authority allocates or auctions TR SO_2 Group 1 allowances and that—

(i) Requires the State or the permitting authority to allocate and, if applicable, auction a total amount of TR SO_2 Group 1 allowances for such control period not exceeding the amount, under §§ 97.610(a) and 97.621 of this chapter for the State and such control period, of the TR SO_2 Group 1 trading budget minus the sum of the Indian country new unit set-aside and the amount of any TR SO_2 Group 1 allowances already allocated and recorded by the Administrator.

(ii) Requires, to the extent the State adopts provisions for allocations or auction of TR SO_2 Group 1 allowances for any such control period to any TR

SO_2 Group 1 units covered by § 97.611(a) of this chapter, that the State or the permitting authority submit such allocations or the results of such auctions for such control period (except allocations or results of auctions to such units of TR SO_2 Group 1 allowances remaining in a set-aside after completion of the allocations or auctions for which the set-aside was created) to the Administrator no later than the following dates:

Year of the control period for which TR SO_2 Group 1 allowances are allocated or auctioned	Deadline for submission of allocations or auction results to administrator
2014	June 1, 2013.
2015	June 1, 2013.
2016	June 1, 2014.
2017	June 1, 2014.
2018	June 1, 2015.
2019	June 1, 2015.
2020 and any year thereafter.	June 1 of the fourth year before the year of the control period.

(iii) Requires, to the extent the State adopts provisions for allocations or auctions of TR SO_2 Group 1 allowances for any such control period to any TR SO_2 Group 1 units covered by §§ 97.611(b)(1) and 97.612(a) of this chapter, that the State or the permitting authority submit such allocations or the results of such auctions (except allocations or results of auctions to such units of TR SO_2 Group 1 allowances remaining in a set-aside after completion of the allocations or auctions for which the set-aside was created) to the Administrator by July 1 of the year of such control period.

(iv) Does not provide for any change, after the submission deadlines in paragraphs (f)(2)(ii) and (iii) of this section, in the allocations submitted to the Administrator by such deadlines and does not provide for any change in any allocation determined and recorded by the Administrator under subpart CCCCC of part 97 of this chapter;

(2) May adopt, in addition to the definitions in § 97.602 of this chapter, one or more definitions that shall apply only to terms as used in the TR SO_2 Group 1 allowance allocation or auction provisions adopted under paragraph (f)(1) of this section;

(3) May substitute the name of the State for the term ''State'' as used in subpart CCCCC of part 97 of this chapter, to the extent the Administrator determines that such substitutions do not make substantive changes in the provisions in §§ 97.602 through 97.635 of this chapter; and

(4) Must not include any of the references to, or requirements imposed on, any unit in Indian country within the borders of the State in the provisions in §§ 97.602 through 97.635 of this chapter and must not include the provisions in §§ 97.611(b)(2) and 97.612(b), all of which provisions will continue to apply under the portion of the TR Federal Implementation Plan that is not replaced by the SIP revision;

(5) Provided that, if and when any covered unit is located in Indian country within the borders of the State, the Administrator may modify his or her approval of the SIP revision to exclude the provisions in §§ 97.602 (definitions of ''common designated representative'', ''common designated representative's assurance level'', and ''common designated representative's share''), 97.606(c)(2), 97.625, and the portions of other provisions referencing these sections and may modify the portion of the TR Federal Implementation Plan that is not replaced by the SIP revision to include these provisions;

(6) Provided that the State must submit a complete SIP revision meeting the requirements of paragraphs (f)(1) through (4) of this section by December 1 of the year before the year of the deadlines for submission of allocations or auction results under paragraphs (f)(1)(ii) and (iii) of this section applicable to the first control period for which the State wants to make allocations or hold an auction under paragraph (f)(1)(ii) and (iii) of this section.

(g) Notwithstanding the provisions of paragraph (a) of this section, a State listed in paragraph (c) of this section may adopt and include in a SIP revision, and the Administrator will approve, as TR SO_2 Group 2 allowance allocation provisions replacing the provisions in § 97.711(a) of this chapter with regard to the control period in 2013, a list of TR SO_2 Group 2 units and the amount of TR SO_2 Group 2 allowances allocated to each unit on such list, provided that the list of units and allocations meets the following requirements:

(1) All of the units on the list must be units that are in the State and commenced commercial operation before January 1, 2010;

(2) The total amount of TR SO_2 Group 2 allowance allocations on the list must not exceed the amount, under § 97.710(a) of this chapter for the State and the control period in 2013, of TR SO_2 Group 2 trading budget minus the sum of the new unit set-aside and Indian country new unit set-aside;

(3) The list must be submitted electronically in a format specified by the Administrator; and

(4) The SIP revision must not provide for any change in the units and allocations on the list after approval of the SIP revision by the Administrator and must not provide for any change in any allocation determined and recorded by the Administrator under subpart DDDDD of part 97 of this chapter;

(5) Provided that:

(i) By October 17, 2011, the State must notify the Administrator electronically in a format specified by the Administrator of the State's intent to submit to the Administrator a complete SIP revision meeting the requirements of paragraph (g)(1) through (4) of this section by April 1, 2012; and

(ii) The State must submit to the Administrator a complete SIP revision described in paragraph (g)(5)(i) of this section by April 1, 2012.

(h) Notwithstanding the provisions of paragraph (a) of this section, a State listed in paragraph (c) of this section may adopt and include in a SIP revision, and the Administrator will approve, regulations revising subpart DDDDD of part 97 of this chapter as follows and not making any other substantive revisions of that subpart:

(1) The State may adopt, as TR SO_2 Group 2 allowance allocation or auction provisions replacing the provisions in §§ 97.711(a) and (b)(1) and 97.712(a) of this chapter with regard to the control period in 2014 and any subsequent year, any methodology under which the State or the permitting authority allocates or auctions TR SO_2 Group 2 allowances and may adopt, in addition to the definitions in § 97.702 of this chapter, one or more definitions that shall apply only to terms as used in the adopted TR SO_2 Group 2 allowance allocation or auction provisions, if such methodology—

(i) Requires the State or the permitting authority to allocate and, if applicable, auction a total amount of TR SO_2 Group 2 allowances for any such control period not exceeding the amount, under §§ 97.710(a) and 97.721 of this chapter for the State and such control period, of the TR SO_2 Group 2 trading budget minus the sum of the Indian country new unit set-aside and the amount of any TR SO_2 Group 2 allowances already allocated and recorded by the Administrator.

(ii) Requires, to the extent the State adopts provisions for allocations or auction of TR SO_2 Group 2 allowances for any such control period to any TR SO_2 Group 2 units covered by § 97.711(a) of this chapter, that the State or the permitting authority submit such

allocations or the results of such auctions for such control period (except allocations or results of auctions to such units of TR SO_2 Group 2 allowances remaining in a set-aside after completion of the allocations or auctions for which the set-aside was created) to the Administrator no later than the following dates:

Year of the control period for which TR SO_2 Group 2 allowances are allocated or auctioned	Deadline for submission of allocations or auction results to administrator
2014	June 1, 2013.
2015	June 1, 2013.
2016	June 1, 2014.
2017	June 1, 2014.
2018	June 1, 2015.
2019	June 1, 2015.
2020 and any year thereafter.	June 1 of the fourth year before the year of the control period.

(iii) Requires, to the extent the State adopts provisions for allocations or auctions of TR SO_2 Group 2 allowances for any such control period to any TR SO_2 Group 2 units covered by §§ 97.711(b)(1) and 97.712(a) of this chapter, that the State or the permitting authority submit such allocations or the results of such auctions (except allocations or results of auctions to such units of TR SO_2 Group 2 allowances remaining in a set-aside after completion of the allocations or auctions for which the set-aside was created) to the Administrator by July 1 of the year of such control period.

(iv) Does not provide for any change, after the submission deadlines in paragraphs (h)(1)(ii) and (iii) of this section, in the allocations submitted to the Administrator by such deadlines and does not provide for any change in any allocation determined and recorded by the Administrator under subpart DDDDD of part 97 of this chapter;

(2) Provided that the State must submit a complete SIP revision meeting the requirements of paragraph (h)(1) of this section by December 1 of the year before the year of the deadlines for submission of allocations or auction results under paragraphs (h)(1)(ii) and (iii) of this section applicable to the first control period for which the State wants to make allocations or hold an auction under paragraph (h)(1)(ii) and (iii) of this section.

(i) Notwithstanding the provisions of paragraph (a) of this section, a State listed in paragraph (c) of this section may adopt and include in a SIP revision, and the Administrator will approve, as correcting in whole or in part, as appropriate, the deficiency in the SIP that is the basis for the TR Federal Implementation Plan set forth in paragraphs (a), (c), (g), and (h) of this section, regulations that are substantively identical to the provisions of the TR SO_2 Group 2 Trading Program set forth in §§ 97.702 through 97.735 of this chapter, except that the SIP revision:

(1) May adopt, as TR SO_2 Group 2 allowance allocation or auction provisions replacing the provisions in §§ 97.711(a) and (b)(1) and 97.712(a) of this chapter with regard to the control period in 2014 and any subsequent year, any methodology under which the State or the permitting authority allocates or auctions TR SO_2 Group 2 allowances and that—

(i) Requires the State or the permitting authority to allocate and, if applicable, auction a total amount of TR SO_2 Group 2 allowances for any such control period not exceeding the amount, under §§ 97.710(a) and 97.721 of this chapter for the State and such control period, of the TR SO_2 Group 2 trading budget minus the sum of the Indian country new unit set-aside and the amount of any TR SO_2 Group 2 allowances already allocated and recorded by the Administrator.

(ii) Requires, to the extent the State adopts provisions for allocations or auction of TR SO_2 Group 2 allowances for any such control period to any TR SO_2 Group 2 units covered by § 97.711(a) of this chapter, that the State or the permitting authority submit such allocations or the results of such auctions for such control period (except allocations or results of auctions to such units of TR SO_2 Group 1 allowances remaining in a set-aside after completion of the allocations or auctions for which the set-aside was created) to the Administrator no later than the following dates:

Year of the control period for which TR SO_2 Group 2 allowances are allocated or auctioned	Deadline for submission of allocations or auction results to administrator
2014	June 1, 2013.
2015	June 1, 2013.
2016	June 1, 2014.
2017	June 1, 2014.
2018	June 1, 2015.
2019	June 1, 2015.
2020 and any year thereafter.	June 1 of the fourth year before the year of the control period.

(iii) Requires, to the extent the State adopts provisions for allocations or auctions of TR SO_2 Group 2 allowances for any such control period to any TR SO_2 Group 2 units covered by §§ 97.711(b)(1) and 97.712(a) of this chapter, that the State or the permitting authority submit such allocations or the results of such auctions (except allocations or results of auctions to such units of TR SO_2 Group 2 allowances remaining in a set-aside after completion of the allocations or auctions for which the set-aside was created) to the Administrator by July 1 of the year of such control period.

(iv) Does not provide for any change, after the submission deadlines in paragraphs (i)(1)(ii) and (iii) of this section, in the allocations submitted to the Administrator by such deadlines and does not provide for any change in any allocation determined and recorded by the Administrator under subpart DDDDD of part 97 of this chapter;

(2) May adopt, in addition to the definitions in § 97.702 of this chapter, one or more definitions that shall apply only to terms as used in the TR SO_2 Group 2 allowance allocation or auction provisions adopted under paragraph (i)(1) of this section;

(3) May substitute the name of the State for the term ''State'' as used in subpart DDDDD of part 97 of this chapter, to the extent the Administrator determines that such substitutions do not make substantive changes in the provisions in §§ 97.702 through 97.735 of this chapter; and

(4) Must not include any of the references to, or requirements imposed on, any unit in Indian country within the borders of the State in the provisions in §§ 97.702 through 97.735 of this chapter and must not include the provisions in §§ 97.711(b)(2) and 97.712(b), all of which provisions will continue to apply under the portion of the TR Federal Implementation Plan that is not replaced by the SIP revision;

(5) Provided that, if and when any covered unit is located in Indian country within the borders of the State, the Administrator may modify his or her approval of the SIP revision to exclude the provisions in §§ 97.702 (definitions of ''common designated representative'', ''common designated representative's assurance level'', and ''common designated representative's share''), 97.706(c)(2), 97.725, and the portions of other provisions referencing these sections and may modify the portion of the TR Federal Implementation Plan that is not replaced by the SIP revision to include these provisions;

(6) Provided that the State must submit a complete SIP revision meeting the requirements of paragraphs (i)(1) through (4) of this section by December 1 of the year before the year of the deadlines for submission of allocations or auction results under paragraphs

(i)(1)(ii) and (iii) of this section applicable to the first control period for which the State wants to make allocations or hold an auction under paragraphs (i)(1)(ii) and (iii) of this section.

(j) Following promulgation of an approval by the Administrator of a State's SIP revision as correcting in whole or in part, as appropriate, the SIP's deficiency that is the basis for the TR Federal Implementation Plan, the provisions of paragraph (b) and (c) of this section, as applicable, will no longer apply to sources in the State, unless the Administrator's approval of the SIP revision is partial or conditional, and will continue to apply to sources in any Indian country within the borders of the State.

(k) Notwithstanding the provisions of paragraph (j) of this section, if, at the time of such approval of the State's SIP revision, the Administrator has already started recording any allocations of TR SO_2 Group 1 allowances under subpart CCCCC of part 97 of this chapter, or allocations of TR SO_2 Group 2 allowances under subpart DDDDD of part 97 of this chapter, to units in a State for a control period in any year, the provisions of subpart CCCCC of part 97 of this chapter authorizing the Administrator to complete the allocation and recordation of TR SO_2 Group 1 allowances, or of subpart DDDDD of part 97 of this chapter authorizing the Administrator to complete the allocation and recordation of TR SO_2 Group 2 allowances, as applicable, to units in the State for each such control period shall continue to apply, unless provided otherwise by such approval of the State's SIP revision.

Subpart B—Alabama

■ 10. Section 52.54 is added to read as follows:

§ 52.54 Interstate pollutant transport provisions; What are the FIP requirements for decreases in emissions of nitrogen oxides?

(a)(1) The owner and operator of each source and each unit located in the State of Alabama and for which requirements are set forth under the TR NO_X Annual Trading Program in subpart AAAAA of part 97 of this chapter must comply with such requirements. The obligation to comply with such requirements will be eliminated by the promulgation of an approval by the Administrator of a revision to Alabama's State Implementation Plan (SIP) as correcting the SIP's deficiency that is the basis for the TR Federal Implementation Plan under § 52.38(a), except to the extent the Administrator's approval is partial or conditional.

(2) Notwithstanding the provisions of paragraph (a)(1) of this section, if, at the time of the approval of Alabama's SIP revision described in paragraph (a)(1) of this section, the Administrator has already started recording any allocations of TR NO_X Annual allowances under subpart AAAAA of part 97 of this chapter to units in the State for a control period in any year, the provisions of subpart AAAAA of part 97 of this chapter authorizing the Administrator to complete the allocation and recordation of TR NO_X Annual allowances to units in the State for each such control period shall continue to apply, unless provided otherwise by such approval of the State's SIP revision.

(b)(1) The owner and operator of each source and each unit located in the State of Alabama and for which requirements are set forth under the TR NO_X Ozone Season Trading Program in subpart BBBBB of part 97 of this chapter must comply with such requirements. The obligation to comply with such requirements will be eliminated by the promulgation of an approval by the Administrator of a revision to Alabama's State Implementation Plan (SIP) as correcting the SIP's deficiency that is the basis for the TR Federal Implementation Plan under § 52.38(b), except to the extent the Administrator's approval is partial or conditional.

(2) Notwithstanding the provisions of paragraph (b)(1) of this section, if, at the time of the approval of the Alabama's SIP revision described in paragraph (b)(1) of this section, the Administrator has already started recording any allocations of TR NO_X Ozone Season allowances under subpart BBBBB of part 97 of this chapter to units in the State for a control period in any year, the provisions of subpart BBBBB of part 97 of this chapter authorizing the Administrator to complete the allocation and recordation of TR NO_X Ozone Season allowances to units in the State for each such control period shall continue to apply, unless provided otherwise by such approval of the State's SIP revision.

■ 11. Section 52.55 is added to read as follows:

§ 52.55 Interstate pollutant transport provisions; What are the FIP requirements for decreases in emissions of sulfur dioxide?

(a) The owner and operator of each source and each unit located in the State of Alabama and for which requirements are set forth under the TR SO_2 Group 2 Trading Program in subpart DDDDD of part 97 of this chapter must comply with such requirements. The obligation to comply with such requirements will be eliminated by the promulgation of an approval by the Administrator of a revision to Alabama's State Implementation Plan (SIP) as correcting the SIP's deficiency that is the basis for the TR Federal Implementation Plan under § 52.39, except to the extent the Administrator's approval is partial or conditional.

(b) Notwithstanding the provisions of paragraph (a) of this section, if, at the time of the approval of Alabama's SIP revision described in paragraph (a) of this section, the Administrator has already started recording any allocations of TR SO_2 Group 2 allowances under subpart DDDDD of part 97 of this chapter to units in the State for a control period in any year, the provisions of subpart DDDDD of part 97 of this chapter authorizing the Administrator to complete the allocation and recordation of TR SO_2 Group 2 allowances to units in the State for each such control period shall continue to apply, unless provided otherwise by such approval of the State's SIP revision.

Subpart E—Arkansas

■ 12. Section 52.184 is added to read as follows:

§ 52.184 Interstate pollutant transport provisions; What are the FIP requirements for decreases in emissions of nitrogen oxides?

(a) The owner and operator of each source and each unit located in the State of Arkansas and for which requirements are set forth under the TR NO_X Ozone Season Trading Program in subpart BBBBB of part 97 of this chapter must comply with such requirements. The obligation to comply with such requirements will be eliminated by the promulgation of an approval by the Administrator of a revision to Arkansas' State Implementation Plan (SIP) as correcting the SIP's deficiency that is the basis for the TR Federal Implementation Plan under § 52.38(b), except to the extent the Administrator's approval is partial or conditional.

(b) Notwithstanding the provisions of paragraph (a) of this section, if, at the time of the approval of Arkansas' SIP revision described in paragraph (a) of this section, the Administrator has already started recording any allocations of TR NO_X Ozone Season allowances under subpart BBBBB of part 97 of this chapter to units in the State for a control period in any year, the provisions of subpart BBBBB of part 97 of this chapter authorizing the Administrator to complete the allocation and recordation of TR NO_X Ozone Season allowances to

units in the State for each such control period shall continue to apply, unless provided otherwise by such approval of the State's SIP revision.

Subpart I—Delaware

■ 13. Section 52.440 is amended by adding a new paragraph (c) to read as follows:

§ 52.440 Interstate pollutant transport provisions; What are the FIP requirements for decreases in emissions of nitrogen oxides?

* * * * *

(c) Notwithstanding any provisions of paragraphs (a) and (b) of this section and subparts AA through II and AAAA through IIII of part 97 of this chapter to the contrary:

(1) With regard to any control period that begins after December 31, 2011,

(i) The provisions in paragraphs (a) and (b) of this section relating to NO_X annual or ozone season emissions shall not be applicable; and

(ii) The Administrator will not carry out any of the functions set forth for the Administrator in subparts AA through II and AAAA through IIII of part 97 of this chapter; and

(2) The Administrator will not deduct for excess emissions any CAIR NO_X allowances or CAIR NO_X Ozone Season allowances allocated for 2012 or any year thereafter;

(3) By November 7, 2011, the Administrator will remove from the CAIR NO_X Allowance Tracking System accounts all CAIR NO_X allowances allocated for a control period in 2012 and any subsequent year, and, thereafter, no holding or surrender of CAIR NO_X allowances will be required with regard to emissions or excess emissions for such control periods; and

(4) By November 7, 2011, the Administrator will remove from the CAIR NO_X Ozone Season Allowance Tracking System accounts all CAIR NO_X Ozone Season allowances allocated for a control period in 2012 and any subsequent year, and, thereafter, no holding or surrender of CAIR NO_X Ozone Season allowances will be required with regard to emissions or excess emissions for such control periods.

■ 14. Section 52.441 is amended by designating the existing text as paragraph (a) and adding a new paragraph (b) to read as follows:

§ 52.441 Interstate pollutant transport provisions; What are the FIP requirements for decreases in emissions of sulfur dioxide?

* * * * *

(b) Notwithstanding any provisions of paragraph (a) of this section and subparts AAA through III of part 97 of this chapter and any State's SIP to the contrary:

(1) With regard to any control period that begins after December 31, 2011,

(i) The provisions of paragraph (a) of this section relating to SO_2 emissions shall not be applicable; and

(ii) The Administrator will not carry out any of the functions set forth for the Administrator in subparts AAA through III of part 97 of this chapter; and

(2) The Administrator will not deduct for excess emissions any CAIR SO_2 allowances allocated for 2012 or any year thereafter.

Subpart J—District of Columbia

■ 15. Section 52.484 is amended by adding a new paragraph (c) to read as follows:

§ 52.484 Interstate pollutant transport provisions; What are the FIP requirements for decreases in emissions of nitrogen oxides?

* * * * *

(c) Notwithstanding any provisions of paragraphs (a) and (b) of this section and subparts AA through II and AAAA through IIII of part 97 of this chapter to the contrary:

(1) With regard to any control period that begins after December 31, 2011,

(i) The provisions in paragraphs (a) and (b) of this section relating to NO_X annual or ozone season emissions shall not be applicable; and

(ii) The Administrator will not carry out any of the functions set forth for the Administrator in subparts AA through II and AAAA through IIII of part 97 of this chapter; and

(2) The Administrator will not deduct for excess emissions any CAIR NO_X allowances or CAIR NO_X Ozone Season allowances allocated for 2012 or any year thereafter;

(3) By November 7, 2011, the Administrator will remove from the CAIR NO_X Allowance Tracking System accounts all CAIR NO_X allowances allocated for a control period in 2012 and any subsequent year, and, thereafter, no holding or surrender of CAIR NO_X allowances will be required with regard to emissions or excess emissions for such control periods; and

(4) By November 7, 2011, the Administrator will remove from the CAIR NO_X Ozone Season Allowance Tracking System accounts all CAIR NO_X Ozone Season allowances allocated for a control period in 2012 and any subsequent year, and, thereafter, no holding or surrender of CAIR NO_X Ozone Season allowances will be required with regard to emissions or excess emissions for such control periods.

■ 16. Section 52.485 is amended by designating the existing text as paragraph (a) and adding a new paragraph (b) to read as follows:

§ 52.485 Interstate pollutant transport provisions; What are the FIP requirements for decreases in emissions of sulfur dioxide?

* * * * *

(b) Notwithstanding any provisions of paragraph (a) of this section and subparts AAA through III of part 97 of this chapter and any State's SIP to the contrary:

(1) With regard to any control period that begins after December 31, 2011,

(i) The provisions of paragraph (a) of this section relating to SO_2 emissions shall not be applicable; and

(ii) The Administrator will not carry out any of the functions set forth for the Administrator in subparts AAA through III of part 97 of this chapter; and

(2) The Administrator will not deduct for excess emissions any CAIR SO_2 allowances allocated for 2012 or any year thereafter.

Subpart K—Florida

■ 17. Section 52.540 is added to read as follows:

§ 52.540 Interstate pollutant transport provisions; What are the FIP requirements for decreases in emissions of nitrogen oxides?

(a) The owner and operator of each source and each unit located in the State of Florida and Indian country within the borders of the State and for which requirements are set forth under the TR NO_X Ozone Season Trading Program in subpart BBBBB of part 97 of this chapter must comply with such requirements. The obligation to comply with such requirements with regard to sources and units located in the State will be eliminated by the promulgation of an approval by the Administrator of a revision to Florida's State Implementation Plan (SIP) as correcting in part the SIP's deficiency that is the basis for the TR Federal Implementation Plan under § 52.38(b), except to the extent the Administrator's approval is partial or conditional. The obligation to comply with such requirements with regard to sources and units located in Indian country within the borders of the State will not be eliminated by the promulgation of an approval by the Administrator of a revision to Florida's SIP.

(b) Notwithstanding the provisions of paragraph (a) of this section, if, at the

time of the approval of Florida's SIP revision described in paragraph (a) of this section, the Administrator has already started recording any allocations of TR NO_X Ozone Season allowances under subpart BBBBB of part 97 of this chapter to units in the State for a control period in any year, the provisions of subpart BBBBB of part 97 of this chapter authorizing the Administrator to complete the allocation and recordation of TR NO_X Ozone Season allowances to units in the State for each such control period shall continue to apply, unless provided otherwise by such approval of the State's SIP revision.

Subpart L—Georgia

■ 18. Section 52.584 is added to read as follows:

§ 52.584 Interstate pollutant transport provisions; What are the FIP requirements for decreases in emissions of nitrogen oxides?

(a)(1) The owner and operator of each source and each unit located in the State of Georgia and for which requirements are set forth under the TR NO_X Annual Trading Program in subpart AAAAA of part 97 of this chapter must comply with such requirements. The obligation to comply with such requirements will be eliminated by the promulgation of an approval by the Administrator of a revision to Georgia's State Implementation Plan (SIP) as correcting the SIP's deficiency that is the basis for the TR Federal Implementation Plan under § 52.38(a), except to the extent the Administrator's approval is partial or conditional.

(2) Notwithstanding the provisions of paragraph (a)(1) of this section, if, at the time of the approval of Georgia's SIP revision described in paragraph (a)(1) of this section, the Administrator has already started recording any allocations of TR NO_X Annual allowances under subpart AAAAA of part 97 of this chapter to units in the State for a control period in any year, the provisions of subpart AAAAA of part 97 of this chapter authorizing the Administrator to complete the allocation and recordation of TR NO_X Annual allowances to units in the State for each such control period shall continue to apply, unless provided otherwise by such approval of the State's SIP revision.

(b)(1) The owner and operator of each source and each unit located in the State of Georgia and for which requirements are set forth under the TR NO_X Ozone Season Trading Program in subpart BBBBB of part 97 of this chapter must comply with such requirements. The obligation to comply with such requirements will be eliminated by the promulgation of an approval by the Administrator of a revision to Georgia's State Implementation Plan (SIP) as correcting the SIP's deficiency that is the basis for the TR Federal Implementation Plan under § 52.38(b), except to the extent the Administrator's approval is partial or conditional.

(2) Notwithstanding the provisions of paragraph (b)(1) of this section, if, at the time of the approval of Georgia's SIP revision described in paragraph (b)(1) of this section, the Administrator has already started recording any allocations of TR NO_X Ozone Season allowances under subpart BBBBB of part 97 of this chapter to units in the State for a control period in any year, the provisions of subpart BBBBB of part 97 of this chapter authorizing the Administrator to complete the allocation and recordation of TR NO_X Ozone Season allowances to units in the State for each such control period shall continue to apply, unless provided otherwise by such approval of the State's SIP revision.

■ 19. Section 52.585 is added to read as follows:

§ 52.585 Interstate pollutant transport provisions; What are the FIP requirements for decreases in emissions of sulfur dioxide?

(a) The owner and operator of each source and each unit located in the State of Georgia and for which requirements are set forth under the TR SO_2 Group 2 Trading Program in subpart DDDDD of part 97 of this chapter must comply with such requirements. The obligation to comply with such requirements will be eliminated by the promulgation of an approval by the Administrator of a revision to Georgia's State Implementation Plan (SIP) as correcting the SIP's deficiency that is the basis for the TR Federal Implementation Plan under § 52.39, except to the extent the Administrator's approval is partial or conditional.

(b) Notwithstanding the provisions of paragraph (a) of this section, if, at the time of the approval of Georgia's SIP revision described in paragraph (a) of this section, the Administrator has already started recording any allocations of TR SO_2 Group 2 allowances under subpart DDDDD of part 97 of this chapter to units in the State for a control period in any year, the provisions of subpart DDDDD of part 97 of this chapter authorizing the Administrator to complete the allocation and recordation of TR SO_2 Group 2 allowances to units in the State for each such control period shall continue to apply, unless provided otherwise by such approval of the State's SIP revision.

Subpart O—Illinois

■ 20. Section 52.745 is added to read as follows:

§ 52.745 Interstate pollutant transport provisions; What are the FIP requirements for decreases in emissions of nitrogen oxides?

(a)(1) The owner and operator of each source and each unit located in the State of Illinois and for which requirements are set forth under the TR NO_X Annual Trading Program in subpart AAAAA of part 97 of this chapter must comply with such requirements. The obligation to comply with such requirements will be eliminated by the promulgation of an approval by the Administrator of a revision to Illinois' State Implementation Plan (SIP) as correcting the SIP's deficiency that is the basis for the TR Federal Implementation Plan under § 52.38(a), except to the extent the Administrator's approval is partial or conditional.

(2) Notwithstanding the provisions of paragraph (a)(1) of this section, if, at the time of the approval of Illinois' SIP revision described in paragraph (a)(1) of this section, the Administrator has already started recording any allocations of TR NO_X Annual allowances under subpart AAAAA of part 97 of this chapter to units in the State for a control period in any year, the provisions of subpart AAAAA of part 97 of this chapter authorizing the Administrator to complete the allocation and recordation of TR NO_X Annual allowances to units in the State for each such control period shall continue to apply, unless provided otherwise by such approval of the State's SIP revision.

(b)(1) The owner and operator of each source and each unit located in the State of Illinois and for which requirements are set forth under the TR NO_X Ozone Season Trading Program in subpart BBBBB of part 97 of this chapter must comply with such requirements. The obligation to comply with such requirements will be eliminated by the promulgation of an approval by the Administrator of a revision to Illinois' State Implementation Plan (SIP) as correcting the SIP's deficiency that is the basis for the TR Federal Implementation Plan under § 52.38(b), except to the extent the Administrator's approval is partial or conditional.

(2) Notwithstanding the provisions of paragraph (b)(1) of this section, if, at the time of the approval of Illinois' SIP revision described in paragraph (b)(1) of this section, the Administrator has already started recording any allocations of TR NO_X Ozone Season allowances under subpart BBBBB of part 97 of this

chapter to units in the State for a control period in any year, the provisions of subpart BBBBB of part 97 of this chapter authorizing the Administrator to complete the allocation and recordation of TR NO_X Ozone Season allowances to units in the State for each such control period shall continue to apply, unless provided otherwise by such approval of the State's SIP revision.

■ 21. Section 52.746 is added to read as follows:

§ 52.746 Interstate pollutant transport provisions; What are the FIP requirements for decreases in emissions of sulfur dioxide?

(a) The owner and operator of each source and each unit located in the State of Illinois and for which requirements are set forth under the TR SO_2 Group 1 Trading Program in subpart CCCCC of part 97 of this chapter must comply with such requirements. The obligation to comply with such requirements will be eliminated by the promulgation of an approval by the Administrator of a revision to Illinois' State Implementation Plan (SIP) as correcting the SIP's deficiency that is the basis for the TR Federal Implementation Plan under § 52.39, except to the extent the Administrator's approval is partial or conditional.

(b) Notwithstanding the provisions of paragraph (a) of this section, if, at the time of the approval of Illinois' SIP revision described in paragraph (a) of this section, the Administrator has already started recording any allocations of TR SO_2 Group 1 allowances under subpart CCCCC of part 97 of this chapter to units in the State for a control period in any year, the provisions of subpart CCCCC of part 97 of this chapter authorizing the Administrator to complete the allocation and recordation of TR SO_2 Group 1 allowances to units in the State for each such control period shall continue to apply, unless provided otherwise by such approval of the State's SIP revision.

Subpart P—Indiana

■ 22. Section 52.789 is added to read as follows:

§ 52.789 Interstate pollutant transport provisions; What are the FIP requirements for decreases in emissions of nitrogen oxides?

(a)(1) The owner and operator of each source and each unit located in the State of Indiana and for which requirements are set forth under the TR NO_X Annual Trading Program in subpart AAAAA of part 97 of this chapter must comply with such requirements. The obligation to comply with such requirements will be eliminated by the promulgation of an approval by the Administrator of a revision to Indiana's State Implementation Plan (SIP) as correcting the SIP's deficiency that is the basis for the TR Federal Implementation Plan under § 52.38(a), except to the extent the Administrator's approval is partial or conditional.

(2) Notwithstanding the provisions of paragraph (a)(1) of this section, if, at the time of the approval of Indiana's SIP revision described in paragraph (a)(1) of this section, the Administrator has already started recording any allocations of TR NO_X Annual allowances under subpart AAAAA of part 97 of this chapter to units in the State for a control period in any year, the provisions of subpart AAAAA of part 97 of this chapter authorizing the Administrator to complete the allocation and recordation of TR NO_X Annual allowances to units in the State for each such control period shall continue to apply, unless provided otherwise by such approval of the State's SIP revision.

(b)(1) The owner and operator of each source and each unit located in the State of Indiana and for which requirements are set forth under the TR NO_X Ozone Season Trading Program in subpart BBBBB of part 97 of this chapter must comply with such requirements. The obligation to comply with such requirements will be eliminated by the promulgation of an approval by the Administrator of a revision to Indiana's State Implementation Plan (SIP) as correcting the SIP's deficiency that is the basis for the TR Federal Implementation Plan under § 52.38(b), except to the extent the Administrator's approval is partial or conditional.

(2) Notwithstanding the provisions of paragraph (b)(1) of this section, if, at the time of the approval of Indiana's SIP revision described in paragraph (b)(1) of this section, the Administrator has already started recording any allocations of TR NO_X Ozone Season allowances under subpart BBBBB of part 97 of this chapter to units in the State for a control period in any year, the provisions of subpart BBBBB of part 97 of this chapter authorizing the Administrator to complete the allocation and recordation of TR NO_X Ozone Season allowances to units in the State for each such control period shall continue to apply, unless provided otherwise by such approval of the State's SIP revision.

■ 23. Section 52.790 is added to read as follows:

§ 52.790 Interstate pollutant transport provisions; What are the FIP requirements for decreases in emissions of sulfur dioxide?

(a) The owner and operator of each source and each unit located in the State of Indiana and for which requirements are set forth under the TR SO_2 Group 1 Trading Program in subpart CCCCC of part 97 of this chapter must comply with such requirements. The obligation to comply with such requirements will be eliminated by the promulgation of an approval by the Administrator of a revision to Indiana's State Implementation Plan (SIP) as correcting the SIP's deficiency that is the basis for the TR Federal Implementation Plan under § 52.39 except to the extent the Administrator's approval is partial or conditional.

(b) Notwithstanding the provisions of paragraph (a) of this section, if, at the time of the approval of Indiana's SIP revision described in paragraph (a) of this section, the Administrator has already started recording any allocations of TR SO_2 Group 1 allowances under subpart CCCCC of part 97 of this chapter to units in the State for a control period in any year, the provisions of subpart CCCCC of part 97 of this chapter authorizing the Administrator to complete the allocation and recordation of TR SO_2 Group 1 allowances to units in the State for each such control period shall continue to apply, unless provided otherwise by such approval of the State's SIP revision.

Subpart Q—Iowa

■ 24. Section 52.840 is added to read as follows:

§ 52.840 Interstate pollutant transport provisions; What are the FIP requirements for decreases in emissions of nitrogen oxides?

(a)(1) The owner and operator of each source and each unit located in the State of Iowa and Indian country within the borders of the State and for which requirements are set forth under the TR NO_X Annual Trading Program in subpart AAAAA of part 97 of this chapter must comply with such requirements. The obligation to comply with such requirements with regard to sources and units in the State will be eliminated by the promulgation of an approval by the Administrator of a revision to Iowa's State Implementation Plan (SIP) as correcting in part the SIP's deficiency that is the basis for the TR Federal Implementation Plan under § 52.38(a), except to the extent the Administrator's approval is partial or conditional. The obligation to comply with such requirements with regard to

sources and units located in Indian country within the borders of the State will not be eliminated by the promulgation of an approval by the Administrator of a revision to Iowa's SIP.

(2) Notwithstanding the provisions of paragraph (a)(1) of this section, if, at the time of the approval of Iowa's SIP revision described in paragraph (a)(1) of this section, the Administrator has already started recording any allocations of TR NO_X Annual allowances under subpart AAAAA of part 97 of this chapter to units in the State for a control period in any year, the provisions of subpart AAAAA of part 97 of this chapter authorizing the Administrator to complete the allocation and recordation of TR NO_X Annual allowances to units in the State for each such control period shall continue to apply, unless provided otherwise by such approval of the State's SIP revision.

(b) [Reserved]

■ 25. Section 52.841 is added to read as follows:

§ 52.841 Interstate pollutant transport provisions; What are the FIP requirements for decreases in emissions of sulfur dioxide?

(a) The owner and operator of each source and each unit located in the State of Iowa and Indian country within the borders of the State and for which requirements are set forth under the TR SO_2 Group 1 Trading Program in subpart CCCCC of part 97 of this chapter must comply with such requirements. The obligation to comply with such requirements with regard to sources and units in the State will be eliminated by the promulgation of an approval by the Administrator of a revision to Iowa's State Implementation Plan (SIP) as correcting in part the SIP's deficiency that is the basis for the TR Federal Implementation Plan under § 52.39, except to the extent the Administrator's approval is partial or conditional. The obligation to comply with such requirements with regard to sources and units located in Indian country within the borders of the State will not be eliminated by the promulgation of an approval by the Administrator of a revision to Iowa's SIP.

(b) Notwithstanding the provisions of paragraph (a) of this section, if, at the time of the approval of Iowa's SIP revision described in paragraph (a) of this section, the Administrator has already started recording any allocations of TR SO_2 Group 1 allowances under subpart CCCCC of part 97 of this chapter to units in the State for a control period in any year, the provisions of subpart CCCCC of part 97 of this chapter authorizing the Administrator to complete the allocation and recordation of TR SO_2 Group 1 allowances to units in the State for each such control period shall continue to apply, unless provided otherwise by such approval of the State's SIP revision.

Subpart R—Kansas

■ 26. Section 52.882 is added to read as follows:

§ 52.882 Interstate pollutant transport provisions; What are the FIP requirements for decreases in emissions of nitrogen oxides?

(a)(1) The owner and operator of each source and each unit located in the State of Kansas and Indian country within the borders of the State and for which requirements are set forth under the TR NO_X Annual Trading Program in subpart AAAAA of part 97 of this chapter must comply with such requirements. The obligation to comply with such requirements with regard to sources and units in the State will be eliminated by the promulgation of an approval by the Administrator of a revision to Kansas' State Implementation Plan (SIP) as correcting in part the SIP's deficiency that is the basis for the TR Federal Implementation Plan under § 52.38(a), except to the extent the Administrator's approval is partial or conditional. The obligation to comply with such requirements with regard to sources and units located in Indian country within the borders of the State will not be eliminated by the promulgation of an approval by the Administrator of a revision to Kansas' SIP.

(2) Notwithstanding the provisions of paragraph (a)(1) of this section, if, at the time of the approval of Kansas' SIP revision described in paragraph (a)(1) of this section, the Administrator has already started recording any allocations of TR NO_X Annual allowances under subpart AAAAA of part 97 of this chapter to units in the State for a control period in any year, the provisions of subpart AAAAA of part 97 of this chapter authorizing the Administrator to complete the allocation and recordation of TR NO_X Annual allowances to units in the State for each such control period shall continue to apply, unless provided otherwise by such approval of the State's SIP revision.

(b) [Reserved]

■ 27. Section 52.883 is added to read as follows:

§ 52.883 Interstate pollutant transport provisions; What are the FIP requirements for decreases in emissions of sulfur dioxide?

(a) The owner and operator of each source and each unit located in the State of Kansas and Indian country within the borders of the State and for which requirements are set forth under the TR SO_2 Group 2 Trading Program in subpart DDDDD of part 97 of this chapter must comply with such requirements. The obligation to comply with such requirements will be eliminated with regard to sources and units in the State by the promulgation of an approval by the Administrator of a revision to Kansas' State Implementation Plan (SIP) as correcting in part the SIP's deficiency that is the basis for the TR Federal Implementation Plan under § 52.39, except to the extent the Administrator's approval is partial or conditional. The obligation to comply with such requirements with regard to sources and units located in Indian country within the borders of the State will not be eliminated by the promulgation of an approval by the Administrator of a revision to Kansas' SIP.

(b) Notwithstanding the provisions of paragraph (a) of this section, if, at the time of the approval of Kansas' SIP revision described in paragraph (a) of this section, the Administrator has already started recording any allocations of TR SO_2 Group 2 allowances under subpart DDDDD of part 97 of this chapter to units in the State for a control period in any year, the provisions of subpart DDDDD of part 97 of this chapter authorizing the Administrator to complete the allocation and recordation of TR SO_2 Group 2 allowances to units in the State for each such control period shall continue to apply, unless provided otherwise by such approval of the State's SIP revision.

Subpart S—Kentucky

■ 28. Section 52.940 is added to read as follows:

§ 52.940 Interstate pollutant transport provisions; What are the FIP requirements for decreases in emissions of nitrogen oxides?

(a)(1) The owner and operator of each source and each unit located in the State of Kentucky and for which requirements are set forth under the TR NO_X Annual Trading Program in subpart AAAAA of part 97 of this chapter must comply with such requirements. The obligation to comply with such requirements will be eliminated by the promulgation of an approval by the Administrator of a revision to Kentucky's State

Implementation Plan (SIP) as correcting the SIP's deficiency that is the basis for the TR Federal Implementation Plan under § 52.38(a), except to the extent the Administrator's approval is partial or conditional.

(2) Notwithstanding the provisions of paragraph (a)(1) of this section, if, at the time of the approval of Kentucky's SIP revision described in paragraph (a)(1) of this section, the Administrator has already started recording any allocations of TR NO_X Annual allowances under subpart AAAAA of part 97 of this chapter to units in the State for a control period in any year, the provisions of subpart AAAAA of part 97 of this chapter authorizing the Administrator to complete the allocation and recordation of TR NO_X Annual allowances to units in the State for each such control period shall continue to apply, unless provided otherwise by such approval of the State's SIP revision.

(b)(1) The owner and operator of each source and each unit located in the State of Kentucky and for which requirements are set forth under the TR NO_X Ozone Season Trading Program in subpart BBBBB of part 97 of this chapter must comply with such requirements. The obligation to comply with such requirements will be eliminated by the promulgation of an approval by the Administrator of a revision to Kentucky's State Implementation Plan (SIP) as correcting the SIP's deficiency that is the basis for the TR Federal Implementation Plan under § 52.38(b), except to the extent the Administrator's approval is partial or conditional.

(2) Notwithstanding the provisions of paragraph (b)(1) of this section, if, at the time of the approval of Kentucky's SIP revision described in paragraph (b)(1) of this section, the Administrator has already started recording any allocations of TR NO_X Ozone Season allowances under subpart BBBBB of part 97 of this chapter to units in the State for a control period in any year, the provisions of subpart BBBBB of part 97 of this chapter authorizing the Administrator to complete the allocation and recordation of TR NO_X Ozone Season allowances to units in the State for each such control period shall continue to apply, unless provided otherwise by such approval of the State's SIP revision.

■ 29. Section 52.941 is added to read as follows:

§ 52.941 Interstate pollutant transport provisions; What are the FIP requirements for decreases in emissions of sulfur dioxide?

(a) The owner and operator of each source and each unit located in the State of Kentucky and for which requirements are set forth under the TR SO_2 Group 1 Trading Program in subpart CCCCC of part 97 of this chapter must comply with such requirements. The obligation to comply with such requirements will be eliminated by the promulgation of an approval by the Administrator of a revision to Kentucky's State Implementation Plan (SIP) as correcting the SIP's deficiency that is the basis for the TR Federal Implementation Plan under § 52.39, except to the extent the Administrator's approval is partial or conditional.

(b) Notwithstanding the provisions of paragraph (a) of this section, if, at the time of the approval of Kentucky's SIP revision described in paragraph (a) of this section, the Administrator has already started recording any allocations of TR SO_2 Group 1 allowances under subpart CCCCC of part 97 of this chapter to units in the State for a control period in any year, the provisions of subpart CCCCC of part 97 of this chapter authorizing the Administrator to complete the allocation and recordation of TR SO_2 Group 1 allowances to units in the State for each such control period shall continue to apply, unless provided otherwise by such approval of the State's SIP revision.

Subpart T—Louisiana

■ 30. Section 52.984 is amended by adding new paragraphs (c) and (d) to read as follows:

§ 52.984 Interstate pollutant transport provisions; What are the FIP requirements for decreases in emissions of nitrogen oxides?

* * * * *

(c) Notwithstanding any provisions of paragraphs (a) and (b) of this section and subparts AA through II and AAAA through IIII of part 97 of this chapter to the contrary:

(1) With regard to any control period that begins after December 31, 2011,

(i) The provisions in paragraphs (a) and (b) of this section relating to NO_X annual or ozone season emissions shall not be applicable; and

(ii) The Administrator will not carry out any of the functions set forth for the Administrator in subparts AA through II and AAAA through IIII of part 97 of this chapter;

(2) The Administrator will not deduct for excess emissions any CAIR NO_X allowances or CAIR NO_X Ozone Season allowances allocated for 2012 or any year thereafter;

(3) By November 7, 2011, the Administrator will remove from the CAIR NO_X Allowance Tracking System accounts all CAIR NO_X allowances allocated for a control period in 2012 and any subsequent year, and, thereafter, no holding or surrender of CAIR NO_X allowances will be required with regard to emissions or excess emissions for such control periods; and

(4) By November 7, 2011, the Administrator will remove from the CAIR NO_X Ozone Season Allowance Tracking System accounts all CAIR NO_X Ozone Season allowances allocated for a control period in 2012 and any subsequent year, and, thereafter, no holding or surrender of CAIR NO_X Ozone Season allowances will be required with regard to emissions or excess emissions for such control periods.

(d)(1) The owner and operator of each source and each unit located in the State of Louisiana and Indian country within the borders of the State and for which requirements are set forth under the TR NO_X Ozone Season Trading Program in subpart BBBBB of part 97 of this chapter must comply with such requirements. The obligation to comply with such requirements with regard to sources and units in the State will be eliminated by the promulgation of an approval by the Administrator of a revision to Louisiana's State Implementation Plan (SIP) as correcting in part the SIP's deficiency that is the basis for the TR Federal Implementation Plan under § 52.38(b), except to the extent the Administrator's approval is partial or conditional. The obligation to comply with such requirements with regard to sources and units located in Indian country within the borders of the State will not be eliminated by the promulgation of an approval by the Administrator of a revision to Louisiana's SIP.

(2) Notwithstanding the provisions of paragraph (d)(1) of this section, if, at the time of the approval of Louisiana's SIP revision described in paragraph (d)(1) of this section, the Administrator has already started recording any allocations of TR NO_X Ozone Season allowances under subpart BBBBB of part 97 of this chapter to units in the State for a control period in any year, the provisions of subpart BBBBB of part 97 of this chapter authorizing the Administrator to complete the allocation and recordation of TR NO_X Ozone Season allowances to units in the State for each such control period shall continue to apply, unless provided otherwise by such approval of the State's SIP revision.

Subpart V—Maryland

■ 31. Section 52.1084 is added to read as follows:

§ 52.1084 Interstate pollutant transport provisions; What are the FIP requirements for decreases in emissions of nitrogen oxides?

(a)(1) The owner and operator of each source and each unit located in the State of Maryland and for which requirements are set forth under the TR NO_X Annual Trading Program in subpart AAAAA of part 97 of this chapter must comply with such requirements. The obligation to comply with such requirements will be eliminated by the promulgation of an approval by the Administrator of a revision to Maryland's State Implementation Plan (SIP) as correcting the SIP's deficiency that is the basis for the TR Federal Implementation Plan under § 52.38(a), except to the extent the Administrator's approval is partial or conditional.

(2) Notwithstanding the provisions of paragraph (a)(1) of this section, if, at the time of the approval of Maryland's SIP revision described in paragraph (a)(1) of this section, the Administrator has already started recording any allocations of TR NO_X Annual allowances under subpart AAAAA of part 97 of this chapter to units in the State for a control period in any year, the provisions of subpart AAAAA of part 97 of this chapter authorizing the Administrator to complete the allocation and recordation of TR NO_X Annual allowances to units in the State for each such control period shall continue to apply, unless provided otherwise by such approval of the State's SIP revision.

(b)(1) The owner and operator of each source and each unit located in the State of Maryland and for which requirements are set forth under the TR NO_X Ozone Season Trading Program in subpart BBBBB of part 97 of this chapter must comply with such requirements. The obligation to comply with such requirements will be eliminated by the promulgation of an approval by the Administrator of a revision to Maryland's State Implementation Plan (SIP) as correcting the SIP's deficiency that is the basis for the TR Federal Implementation Plan under § 52.38(b), except to the extent the Administrator's approval is partial or conditional.

(2) Notwithstanding the provisions of paragraph (b)(1) of this section, if, at the time of the approval of Maryland's SIP revision described in paragraph (b)(1) of this section, the Administrator has already started recording any allocations of TR NO_X Ozone Season allowances under subpart BBBBB of part 97 of this chapter to units in the State for a control period in any year, the provisions of subpart BBBBB of part 97 of this chapter authorizing the Administrator to complete the allocation and recordation of TR NO_X Ozone Season allowances to units in the State for each such control period shall continue to apply, unless provided otherwise by such approval of the State's SIP revision.

■ 32. Section 52.1085 is added to read as follows:

§ 52.1085 Interstate pollutant transport provisions; What are the FIP requirements for decreases in emissions of sulfur dioxide?

(a) The owner and operator of each source and each unit located in the State of Maryland and for which requirements are set forth under the TR SO_2 Group 1 Trading Program in subpart CCCCC of part 97 of this chapter must comply with such requirements. The obligation to comply with such requirements will be eliminated by the promulgation of an approval by the Administrator of a revision to Maryland's State Implementation Plan (SIP) as correcting the SIP's deficiency that is the basis for the TR Federal Implementation Plan under § 52.39, except to the extent the Administrator's approval is partial or conditional.

(b) Notwithstanding the provisions of paragraph (a) of this section, if, at the time of the approval of Maryland's SIP revision described in paragraph (a) of this section, the Administrator has already started recording any allocations of TR SO_2 Group 1 allowances under subpart CCCCC of part 97 of this chapter to units in the State for a control period in any year, the provisions of subpart CCCCC of part 97 of this chapter authorizing the Administrator to complete the allocation and recordation of TR SO_2 Group 1 allowances to units in the State for each such control period shall continue to apply, unless provided otherwise by such approval of the State's SIP revision.

Subpart X—Michigan

■ 33. Section 52.1186 is amended by adding new paragraphs (c) and (d) to read as follows:

§ 52.1186 Interstate pollutant transport provisions; What are the FIP requirements for decreases in emissions of nitrogen oxides?

* * * * *

(c) Notwithstanding any provisions of paragraphs (a) and (b) of this section and subparts AA through II and AAAA through IIII of part 97 of this chapter to the contrary:

(1) With regard to any control period that begins after December 31, 2011,

(i) The provisions in paragraphs (a) and (b) of this section relating to NO_X annual or ozone season emissions shall not be applicable; and

(ii) The Administrator will not carry out any of the functions set forth for the Administrator in subparts AA through II and AAAA through IIII of part 97 of this chapter;

(2) The Administrator will not deduct for excess emissions any CAIR NO_X allowances or CAIR NO_X Ozone Season allowances allocated for 2012 or any year thereafter;

(3) By November 7, 2011, the Administrator will remove from the CAIR NO_X Allowance Tracking System accounts all CAIR NO_X allowances allocated for a control period in 2012 and any subsequent year, and, thereafter, no holding or surrender of CAIR NO_X allowances will be required with regard to emissions or excess emissions for such control periods; and

(4) By November 7, 2011, the Administrator will remove from the CAIR NO_X Ozone Season Allowance Tracking System accounts all CAIR NO_X Ozone Season allowances allocated for a control period in 2012 and any subsequent year, and, thereafter, no holding or surrender of CAIR NO_X Ozone Season allowances will be required with regard to emissions or excess emissions for such control periods.

(d)(1) The owner and operator of each source and each unit located in the State of Michigan and Indian country within the borders of the State and for which requirements are set forth under the TR NO_X Annual Trading Program in subpart AAAAA of part 97 of this chapter must comply with such requirements. The obligation to comply with such requirements with regard to sources and units in the State will be eliminated by the promulgation of an approval by the Administrator of a revision to Michigan's State Implementation Plan (SIP) as correcting in part the SIP's deficiency that is the basis for the TR Federal Implementation Plan under § 52.38(a), except to the extent the Administrator's approval is partial or conditional. The obligation to comply with such requirements with regard to sources and units located in Indian country within the borders of the State will not be eliminated by the promulgation of an approval by the Administrator of a revision to Michigan's SIP.

(2) Notwithstanding the provisions of paragraph (d)(1) of this section, if, at the time of the approval of Michigan's SIP revision described in paragraph (d)(1) of this section, the Administrator has already started recording any allocations of TR NO_X Annual allowances under subpart AAAAA of part 97 of this chapter to units in the State for a control period in any year, the provisions of

subpart AAAAA of part 97 of this chapter authorizing the Administrator to complete the allocation and recordation of TR NO_X Annual allowances to units in the State for each such control period shall continue to apply, unless provided otherwise by such approval of the State's SIP revision.

(e) [Reserved]

■ 34. Section 52.1187 is amended by designating the existing text as paragraph (a) and adding new paragraphs (b) and (c) to read as follows:

§ 52.1187 Interstate pollutant transport provisions; What are the FIP requirements for decreases in emissions of sulfur dioxide?

* * * * *

(b) Notwithstanding any provisions of paragraph (a) of this section and subparts AAA through III of part 97 of this chapter and any State's SIP to the contrary:

(1) With regard to any control period that begins after December 31, 2011,

(i) The provisions of paragraph (a) of this section relating to SO_2 emissions shall not be applicable; and

(ii) The Administrator will not carry out any of the functions set forth for the Administrator in subparts AAA through III of part 97 of this chapter; and

(2) The Administrator will not deduct for excess emissions any CAIR SO_2 allowances allocated for 2012 or any year thereafter.

(c)(1) The owner and operator of each source and each unit located in the State of Michigan and Indian country within the borders of the State and for which requirements are set forth under the TR SO_2 Group 1 Trading Program in subpart CCCCC of part 97 of this chapter must comply with such requirements. The obligation to comply with such requirements with regard to sources and units in the State will be eliminated by the promulgation of an approval by the Administrator of a revision to Michigan's State Implementation Plan (SIP) as correcting in part the SIP's deficiency that is the basis for the TR Federal Implementation Plan under § 52.39, except to the extent the Administrator's approval is partial or conditional. The obligation to comply with such requirements with regard to sources and units located in Indian country within the borders of the State will not be eliminated by the promulgation of an approval by the Administrator of a revision to Michigan's SIP.

(2) Notwithstanding the provisions of paragraph (c)(1) of this section, if, at the time of the approval of Maryland's SIP revision described in paragraph (c)(1) of this section, the Administrator has already started recording any allocations of TR SO_2 Group 1 allowances under subpart CCCCC of part 97 of this chapter to units in the State for a control period in any year, the provisions of subpart CCCCC of part 97 of this chapter authorizing the Administrator to complete the allocation and recordation of TR SO_2 Group 1 allowances to units in the State for each such control period shall continue to apply, unless provided otherwise by such approval of the State's SIP revision.

Subpart Y—Minnesota

■ 35. Section 52.1240 is amended by adding paragraph (c) to read as follows:

§ 52.1240 Interstate pollutant transport provisions; What are the FIP requirements for decreases in emissions of nitrogen oxides?

* * * * *

(c)(1) The owner and operator of each source and each unit located in the State of Minnesota and Indian country within the borders of the State and for which requirements are set forth under the TR NO_X Annual Trading Program in subpart AAAAA of part 97 of this chapter must comply with such requirements. The obligation to comply with such requirements with regard to sources and units in the State will be eliminated by the promulgation of an approval by the Administrator of a revision to Minnesota's State Implementation Plan (SIP) as correcting in part the SIP's deficiency that is the basis for the TR Federal Implementation Plan under § 52.38(a), except to the extent the Administrator's approval is partial or conditional. The obligation to comply with such requirements with regard to sources and units located in Indian country within the borders of the State will not be eliminated by the promulgation of an approval by the Administrator of a revision to Minnesota's SIP.

(2) Notwithstanding the provisions of paragraph (c)(1) of this section, if, at the time of the approval of Minnesota's SIP revision described in paragraph (c)(1) of this section, the Administrator has already started recording any allocations of TR NO_X Annual allowances under subpart AAAAA of part 97 of this chapter to units in the State for a control period in any year, the provisions of subpart AAAAA of part 97 of this chapter authorizing the Administrator to complete the allocation and recordation of TR NO_X Annual allowances to units in the State for each such control period shall continue to apply, unless provided otherwise by such approval of the State's SIP revision.

■ 36. Section 52.1241 is amended by adding paragraph (c) to read as follows:

§ 52.1241 Interstate pollutant transport provisions; What are the FIP requirements for decreases in emissions of sulfur dioxide?

* * * * *

(c)(1) The owner and operator of each source and each unit located in the State of Minnesota and Indian country within the borders of the State and for which requirements are set forth under the TR SO_2 Group 2 Trading Program in subpart DDDDD of part 97 of this chapter must comply with such requirements. The obligation to comply with such requirements with regard to sources and units in the State will be eliminated by the promulgation of an approval by the Administrator of a revision to Minnesota's State Implementation Plan (SIP) as correcting in part the SIP's deficiency that is the basis for the TR Federal Implementation Plan under § 52.39, except to the extent the Administrator's approval is partial or conditional. The obligation to comply with such requirements with regard to sources and units located in Indian country within the borders of the State will not be eliminated by the promulgation of an approval by the Administrator of a revision to Minnesota's SIP.

(2) Notwithstanding the provisions of paragraph (c)(1) of this section, if, at the time of the approval of Minnesota's SIP revision described in paragraph (c)(1) of this section, the Administrator has already started recording any allocations of TR SO_2 Group 2 allowances under subpart DDDDD of part 97 of this chapter to units in the State for a control period in any year, the provisions of subpart DDDDD of part 97 of this chapter authorizing the Administrator to complete the allocation and recordation of TR SO_2 Group 2 allowances to units in the State for each such control period shall continue to apply, unless provided otherwise by such approval of the State's SIP revision.

Subpart Z—Mississippi

■ 37. Section 52.1284 is added to read as follows:

§ 52.1284 Interstate pollutant transport provisions; What are the FIP requirements for decreases in emissions of nitrogen oxides?

(a) The owner and operator of each source and each unit located in the State of Mississippi and Indian country within the borders of the State and for which requirements are set forth under the TR NO_X Ozone Season Trading Program in subpart BBBBB of part 97 of

this chapter must comply with such requirements. The obligation to comply with such requirements with regard to sources and units in the State will be eliminated by the promulgation of an approval by the Administrator of a revision to Mississippi's State Implementation Plan (SIP) as correcting in part the SIP's deficiency that is the basis for the TR Federal Implementation Plan under § 52.38(b), except to the extent the Administrator's approval is partial or conditional. The obligation to comply with such requirements with regard to sources and units located in Indian country within the borders of the State will not be eliminated by the promulgation of an approval by the Administrator of a revision to Mississippi's SIP.

(b) Notwithstanding the provisions of paragraph (a) of this section, if, at the time of the approval of Mississippi's SIP revision described in paragraph (a) of this section, the Administrator has already started recording any allocations of TR NO_X Ozone Season allowances under subpart BBBBB of part 97 of this chapter to units in the State for a control period in any year, the provisions of subpart BBBBB of part 97 of this chapter authorizing the Administrator to complete the allocation and recordation of TR NO_X Ozone Season allowances to units in the State for each such control period shall continue to apply, unless provided otherwise by such approval of the State's SIP revision.

Subpart AA—Missouri

■ 38. Section 52.1326 is added to read as follows:

§ 52.1326 Interstate pollutant transport provisions; What are the FIP requirements for decreases in emissions of nitrogen oxides?

(a)(1) The owner and operator of each source and each unit located in the State of Missouri and for which requirements are set forth under the TR NO_X Annual Trading Program in subpart AAAAA of part 97 of this chapter must comply with such requirements. The obligation to comply with such requirements will be eliminated by the promulgation of an approval by the Administrator of a revision to Missouri's State Implementation Plan (SIP) as correcting the SIP's deficiency that is the basis for the TR Federal Implementation Plan under § 52.38(a), except to the extent the Administrator's approval is partial or conditional.

(2) Notwithstanding the provisions of paragraph (a)(1) of this section, if, at the time of the approval of Missouri's SIP revision described in paragraph (a)(1) of this section, the Administrator has already started recording any allocations of TR NO_X Annual allowances under subpart AAAAA of part 97 of this chapter to units in the State for a control period in any year, the provisions of subpart AAAAA of part 97 of this chapter authorizing the Administrator to complete the allocation and recordation of TR NO_X Annual allowances to units in the State for each such control period shall continue to apply, unless provided otherwise by such approval of the State's SIP revision.

(b) [Reserved]

■ 39. Section 52.1327 is added to read as follows:

§ 52.1327 Interstate pollutant transport provisions; What are the FIP requirements for decreases in emissions of sulfur dioxide?

(a) The owner and operator of each source and each unit located in the State of Missouri and for which requirements are set forth under the TR SO_2 Group 1 Trading Program in subpart CCCCC of part 97 of this chapter must comply with such requirements. The obligation to comply with such requirements will be eliminated by the promulgation of an approval by the Administrator of a revision to Missouri's State Implementation Plan (SIP) as correcting the SIP's deficiency that is the basis for the TR Federal Implementation Plan under § 52.39, except to the extent the Administrator's approval is partial or conditional.

(b) Notwithstanding the provisions of paragraph (a) of this section, if, at the time of the approval of Missouri's SIP revision described in paragraph (a) of this section, the Administrator has already started recording any allocations of TR SO_2 Group 1 allowances under subpart CCCCC of part 97 of this chapter to units in the State for a control period in any year, the provisions of subpart CCCCC of part 97 of this chapter authorizing the Administrator to complete the allocation and recordation of TR SO_2 Group 1 allowances to units in the State for each such control period shall continue to apply, unless provided otherwise by such approval of the State's SIP revision.

Subpart CC—Nebraska

■ 40. Section 52.1428 is added to read as follows:

§ 52.1428 Interstate pollutant transport provisions; What are the FIP requirements for decreases in emissions of nitrogen oxides?

(a) The owner and operator of each source and each unit located in the State of Nebraska and Indian country within the borders of the State and for which requirements are set forth under the TR NO_X Annual Trading Program in subpart AAAAA of part 97 of this chapter must comply with such requirements. The obligation to comply with such requirements with regard to sources and units in the State will be eliminated by the promulgation of an approval by the Administrator of a revision to Nebraska's State Implementation Plan (SIP) as correcting in part the SIP's deficiency that is the basis for the TR Federal Implementation Plan under § 52.38(a), except to the extent the Administrator's approval is partial or conditional. The obligation to comply with such requirements with regard to sources and units located in Indian country within the borders of the State will not be eliminated by the promulgation of an approval by the Administrator of a revision to Nebraska's SIP.

(b) Notwithstanding the provisions of paragraph (a) of this section, if, at the time of the approval of Nebraska's SIP revision described in paragraph (a) of this section, the Administrator has already started recording any allocations of TR NO_X Annual allowances under subpart AAAAA of part 97 of this chapter to units in the State for a control period in any year, the provisions of subpart AAAAA of part 97 of this chapter authorizing the Administrator to complete the allocation and recordation of TR NO_X Annual allowances to units in the State for each such control period shall continue to apply, unless provided otherwise by such approval of the State's SIP revision.

■ 41. Section 52.1429 is added to read as follows:

§ 52.1429 Interstate pollutant transport provisions; What are the FIP requirements for decreases in emissions of sulfur dioxide?

(a) The owner and operator of each source and each unit located in the State of Nebraska and Indian country within the borders of the State and for which requirements are set forth under the TR SO_2 Group 2 Trading Program in subpart DDDDD of part 97 of this chapter must comply with such requirements. The obligation to comply with such requirements with regard to sources and units in the State will be eliminated by the promulgation of an approval by the Administrator of a revision to Nebraska's State Implementation Plan (SIP) as correcting in part the SIP's deficiency that is the basis for the TR Federal Implementation Plan under § 52.39, except to the extent the Administrator's approval is partial or conditional. The obligation to comply with such requirements with regard to

sources and units located in Indian country within the borders of the State will not be eliminated by the promulgation of an approval by the Administrator of a revision to Nebraska's SIP.

(b) Notwithstanding the provisions of paragraph (a) of this section, if, at the time of the approval of Nebraska's SIP revision described in paragraph (a) of this section, the Administrator has already started recording any allocations of TR SO_2 Group 2 allowances under subpart DDDDD of part 97 of this chapter to units in the State for a control period in any year, the provisions of subpart DDDDD of part 97 of this chapter authorizing the Administrator to complete the allocation and recordation of TR SO_2 Group 2 allowances to units in the State for each such control period shall continue to apply, unless provided otherwise by such approval of the State's SIP revision.

Subpart FF—New Jersey

■ 42. Section 52.1584 is amended by adding new paragraphs (c), (d), and (e) to read as follows:

§ 52.1584 Interstate pollutant transport provisions; What are the FIP requirements for decreases in emissions of nitrogen oxides?

* * * * *

(c) Notwithstanding any provisions of paragraphs (a) and (b) of this section and subparts AA through II and AAAA through IIII of part 97 of this chapter to the contrary:

(1) With regard to any control period that begins after December 31, 2011,

(i) The provisions in paragraphs (a) and (b) of this section relating to NO_X annual or ozone season emissions shall not be applicable; and

(ii) The Administrator will not carry out any of the functions set forth for the Administrator in subparts AA through II and AAAA through IIII of part 97 of this chapter;

(2) The Administrator will not deduct for excess emissions any CAIR NO_X allowances or CAIR NO_X Ozone Season allowances allocated for 2012 or any year thereafter;

(3) By November 7, 2011, the Administrator will remove from the CAIR NO_X Allowance Tracking System accounts all CAIR NO_X allowances allocated for a control period in 2012 and any subsequent year, and, thereafter, no holding or surrender of CAIR NO_X allowances will be required with regard to emissions or excess emissions for such control periods; and

(4) By November 7, 2011, the Administrator will remove from the CAIR NO_X Ozone Season Allowance Tracking System accounts all CAIR NO_X Ozone Season allowances allocated for a control period in 2012 and any subsequent year, and, thereafter, no holding or surrender of CAIR NO_X Ozone Season allowances will be required with regard to emissions or excess emissions for such control periods.

(d)(1) The owner and operator of each source and each unit located in the State of New Jersey and for which requirements are set forth under the TR NO_X Annual Trading Program in subpart AAAAA of part 97 of this chapter must comply with such requirements. The obligation to comply with such requirements will be eliminated by the promulgation of an approval by the Administrator of a revision to New Jersey's State Implementation Plan (SIP) as correcting the SIP's deficiency that is the basis for the TR Federal Implementation Plan under § 52.38(a), except to the extent the Administrator's approval is partial or conditional.

(2) Notwithstanding the provisions of paragraph (d)(1) of this section, if, at the time of the approval of New Jersey's SIP revision described in paragraph (d)(1) of this section, the Administrator has already started recording any allocations of TR NO_X Annual allowances under subpart AAAAA of part 97 of this chapter to units in the State for a control period in any year, the provisions of subpart AAAAA of part 97 of this chapter authorizing the Administrator to complete the allocation and recordation of TR NO_X Annual allowances to units in the State for each such control period shall continue to apply, unless provided otherwise by such approval of the State's SIP revision.

(e)(1) The owner and operator of each source and each unit located in the State of New Jersey and for which requirements are set forth under the TR NO_X Ozone Season Trading Program in subpart BBBBB of part 97 of this chapter must comply with such requirements. The obligation to comply with such requirements will be eliminated by the promulgation of an approval by the Administrator of a revision to New Jersey's State Implementation Plan (SIP) as correcting the SIP's deficiency that is the basis for the TR Federal Implementation Plan under § 52.38(b), except to the extent the Administrator's approval is partial or conditional.

(2) Notwithstanding the provisions of paragraph (e)(1) of this section, if, at the time of the approval of New Jersey's SIP revision described in paragraph (e)(1) of this section, the Administrator has already started recording any allocations of TR NO_X Ozone Season allowances under subpart BBBBB of part 97 of this chapter to units in the State for a control period in any year, the provisions of subpart BBBBB of part 97 of this chapter authorizing the Administrator to complete the allocation and recordation of TR NO_X Ozone Season allowances to units in the State for each such control period shall continue to apply, unless provided otherwise by such approval of the State's SIP revision.

■ 43. Section 52.1585 is amended by designating the existing text as paragraph (a) and adding new paragraphs (b) and (c) to read as follows:

§ 52.1585 Interstate pollutant transport provisions; What are the FIP requirements for decreases in emissions of sulfur dioxide?

* * * * *

(b) Notwithstanding any provisions of paragraph (a) of this section and subparts AAA through III of part 97 of this chapter and any State's SIP to the contrary:

(1) With regard to any control period that begins after December 31, 2011,

(i) The provisions of paragraph (a) of this section relating to SO_2 emissions shall not be applicable; and

(ii) The Administrator will not carry out any of the functions set forth for the Administrator in subparts AAA through III of part 97 of this chapter; and

(2) The Administrator will not deduct for excess emissions any CAIR SO_2 allowances allocated for 2012 or any year thereafter.

(c)(1) The owner and operator of each source and each unit located in the State of New Jersey and for which requirements are set forth under the TR SO_2 Group 1 Trading Program in subpart CCCCC of part 97 of this chapter must comply with such requirements. The obligation to comply with such requirements will be eliminated by the promulgation of an approval by the Administrator of a revision to New Jersey's State Implementation Plan (SIP) as correcting the SIP's deficiency that is the basis for the TR Federal Implementation Plan under § 52.39, except to the extent the Administrator's approval is partial or conditional.

(2) Notwithstanding the provisions of paragraph (c)(1) of this section, if, at the time of the approval of New Jersey's SIP revision described in paragraph (c)(1) of this section, the Administrator has already started recording any allocations of TR SO_2 Group 1 allowances under subpart CCCCC of part 97 of this chapter to units in the State for a control period in any year, the provisions of subpart CCCCC of part 97 of this chapter authorizing the Administrator to complete the allocation and recordation

of TR SO_2 Group 1 allowances to units in the State for each such control period shall continue to apply, unless provided otherwise by such approval of the State's SIP revision.

Subpart HH—New York

■ 44. Section 52.1684 is revised to read as follows:

§ 52.1684 Interstate pollutant transport provisions; What are the FIP requirements for decreases in emissions of nitrogen oxides?

(a)(1) The owner and operator of each source and each unit located in the State of New York and Indian country within the borders of the State and for which requirements are set forth under the TR NO_X Annual Trading Program in subpart AAAAA of part 97 of this chapter must comply with such requirements. The obligation to comply with such requirements with regard to sources and units in the State will be eliminated by the promulgation of an approval by the Administrator of a revision to New York's State Implementation Plan (SIP) as correcting in part the SIP's deficiency that is the basis for the TR Federal Implementation Plan under § 52.38(a), except to the extent the Administrator's approval is partial or conditional. The obligation to comply with such requirements with regard to sources and units located in Indian country within the borders of the State will not be eliminated by the promulgation of an approval by the Administrator of a revision to New York's SIP.

(2) Notwithstanding the provisions of paragraph (a)(1) of this section, if, at the time of the approval of New York's SIP revision described in paragraph (a)(1) of this section, the Administrator has already started recording any allocations of TR NO_X Annual allowances under subpart AAAAA of part 97 of this chapter to units in the State for a control period in any year, the provisions of subpart AAAAA of part 97 of this chapter authorizing the Administrator to complete the allocation and recordation of TR NO_X Annual allowances to units in the State for each such control period shall continue to apply, unless provided otherwise by such approval of the State's SIP revision.

(b)(1) The owner and operator of each source and each unit located in the State of New York and Indian country within the borders of the State and for which requirements are set forth under the TR NO_X Ozone Season Trading Program in subpart BBBBB of part 97 of this chapter must comply with such requirements. The obligation to comply with such requirements with regard to sources and units in the State will be eliminated by the promulgation of an approval by the Administrator of a revision to New York's State Implementation Plan (SIP) as correcting in part the SIP's deficiency that is the basis for the TR Federal Implementation Plan under § 52.38(b), except to the extent the Administrator's approval is partial or conditional. The obligation to comply with such requirements with regard to sources and units located in Indian country within the borders of the State will not be eliminated by the promulgation of an approval by the Administrator of a revision to New York's SIP.

(2) Notwithstanding the provisions of paragraph (b)(1) of this section, if, at the time of the approval of New York's SIP revision described in paragraph (b)(1) of this section, the Administrator has already started recording any allocations of TR NO_X Ozone Season allowances under subpart BBBBB of part 97 of this chapter to units in the State for a control period in any year, the provisions of subpart BBBBB of part 97 of this chapter authorizing the Administrator to complete the allocation and recordation of TR NO_X Ozone Season allowances to units in the State for each such control period shall continue to apply, unless provided otherwise by such approval of the State's SIP revision.

■ 45. Section 52.1685 is added to read as follows:

§ 52.1685 Interstate pollutant transport provisions; What are the FIP requirements for decreases in emissions of sulfur dioxide?

(a) The owner and operator of each source and each unit located in the State of New York and Indian country within the borders of the State and for which requirements are set forth under the TR SO_2 Group 1 Trading Program in subpart CCCCC of part 97 of this chapter must comply with such requirements. The obligation to comply with such requirements with regard to sources and units in the State will be eliminated by the promulgation of an approval by the Administrator of a revision to New York's State Implementation Plan (SIP) as correcting in part the SIP's deficiency that is the basis for the TR Federal Implementation Plan under § 52.39, except to the extent the Administrator's approval is partial or conditional. The obligation to comply with such requirements with regard to sources and units located in Indian country within the borders of the State will not be eliminated by the promulgation of an approval by the Administrator of a revision to New York's SIP.

(b) Notwithstanding the provisions of paragraph (a) of this section, if, at the time of the approval of New York's SIP revision described in paragraph (a) of this section, the Administrator has already started recording any allocations of TR SO_2 Group 1 allowances under subpart CCCCC of part 97 of this chapter to units in the State for a control period in any year, the provisions of subpart CCCCC of part 97 of this chapter authorizing the Administrator to complete the allocation and recordation of TR SO_2 Group 1 allowances to units in the State for each such control period shall continue to apply, unless provided otherwise by such approval of the State's SIP revision.

Subpart II—North Carolina

■ 46. Section 52.1784 is revised to read as follows:

§ 52.1784 Interstate pollutant transport provisions; What are the FIP requirements for decreases in emissions of nitrogen oxides?

(a)(1) The owner and operator of each source and each unit located in the State of North Carolina and Indian country within the borders of the State and for which requirements are set forth under the TR NO_X Annual Trading Program in subpart AAAAA of part 97 of this chapter must comply with such requirements. The obligation to comply with such requirements with regard to sources and units in the State will be eliminated by the promulgation of an approval by the Administrator of a revision to North Carolina's State Implementation Plan (SIP) as correcting in part the SIP's deficiency that is the basis for the TR Federal Implementation Plan under § 52.38(a), except to the extent the Administrator's approval is partial or conditional. The obligation to comply with such requirements with regard to sources and units located in Indian country within the borders of the State will not be eliminated by the promulgation of an approval by the Administrator of a revision to North Carolina's SIP.

(2) Notwithstanding the provisions of paragraph (a)(1) of this section, if, at the time of the approval of North Carolina's SIP revision described in paragraph (a)(1) of this section, the Administrator has already started recording any allocations of TR NO_X Annual allowances under subpart AAAAA of part 97 of this chapter to units in the State for a control period in any year, the provisions of subpart AAAAA of part 97 of this chapter authorizing the Administrator to complete the allocation and recordation of TR NO_X Annual allowances to units in the State for each such control period shall

continue to apply, unless provided otherwise by such approval of the State's SIP revision.

(b)(1) The owner and operator of each source and each unit located in the State of North Carolina and Indian country within the borders of the State and for which requirements are set forth under the TR NO_X Ozone Season Trading Program in subpart BBBBB of part 97 of this chapter must comply with such requirements. The obligation to comply with such requirements with regard to sources and units in the State will be eliminated by the promulgation of an approval by the Administrator of a revision to North Carolina's State Implementation Plan (SIP) as correcting in part the SIP's deficiency that is the basis for the TR Federal Implementation Plan under § 52.38(b), except to the extent the Administrator's approval is partial or conditional. The obligation to comply with such requirements with regard to sources and units located in Indian country within the borders of the State will not be eliminated by the promulgation of an approval by the Administrator of a revision to North Carolina's SIP.

(2) Notwithstanding the provisions of paragraph (b)(1) of this section, if, at the time of the approval of North Carolina's SIP revision described in paragraph (b)(1) of this section, the Administrator has already started recording any allocations of TR NO_X Ozone Season allowances under subpart BBBBB of part 97 of this chapter to units in the State for a control period in any year, the provisions of subpart BBBBB of part 97 of this chapter authorizing the Administrator to complete the allocation and recordation of TR NO_X Ozone Season allowances to units in the State for each such control period shall continue to apply, unless provided otherwise by such approval of the State's SIP revision.

■ 47. Section 52.1785 is revised to read as follows:

§ 52.1785 Interstate pollutant transport provisions; What are the FIP requirements for decreases in emissions of sulfur dioxide?

(a) The owner and operator of each source and each unit located in the State of North Carolina and Indian country within the borders of the State and for which requirements are set forth under the TR SO_2 Group 1 Trading Program in subpart CCCCC of part 97 of this chapter must comply with such requirements. The obligation to comply with such requirements with regard to sources and units in the State will be eliminated by the promulgation of an approval by the Administrator of a revision to North Carolina's State Implementation Plan (SIP) as correcting in part the SIP's deficiency that is the basis for the TR Federal Implementation Plan under § 52.39, except to the extent the Administrator's approval is partial or conditional. The obligation to comply with such requirements with regard to sources and units located in Indian country within the borders of the State will not be eliminated by the promulgation of an approval by the Administrator of a revision to North Carolina's SIP.

(b) Notwithstanding the provisions of paragraph (a) of this section, if, at the time of the approval of North Carolina's SIP revision described in paragraph (a) of this section, the Administrator has already started recording any allocations of TR SO_2 Group 1 allowances under subpart CCCCC of part 97 of this chapter to units in the State for a control period in any year, the provisions of subpart CCCCC of part 97 of this chapter authorizing the Administrator to complete the allocation and recordation of TR SO_2 Group 1 allowances to units in the State for each such control period shall continue to apply, unless provided otherwise by such approval of the State's SIP revision.

Subpart KK—Ohio

■ 48. Section 52.1882 is added to read as follows:

§ 52.1882 Interstate pollutant transport provisions; What are the FIP requirements for decreases in emissions of nitrogen oxides?

(a)(1) The owner and operator of each source and each unit located in the State of Ohio and for which requirements are set forth under the TR NO_X Annual Trading Program in subpart AAAAA of part 97 of this chapter must comply with such requirements. The obligation to comply with such requirements will be eliminated by the promulgation of an approval by the Administrator of a revision to Ohio's State Implementation Plan (SIP) as correcting the SIP's deficiency that is the basis for the TR Federal Implementation Plan under § 52.38(a), except to the extent the Administrator's approval is partial or conditional.

(2) Notwithstanding the provisions of paragraph (a)(1) of this section, if, at the time of the approval of Ohio's SIP revision described in paragraph (a)(1) of this section, the Administrator has already started recording any allocations of TR NO_X Annual allowances under subpart AAAAA of part 97 of this chapter to units in the State for a control period in any year, the provisions of subpart AAAAA of part 97 of this chapter authorizing the Administrator to complete the allocation and recordation of TR NO_X Annual allowances to units in the State for each such control period shall continue to apply, unless provided otherwise by such approval of the State's SIP revision.

(b)(1) The owner and operator of each source and each unit located in the State of Ohio and for which requirements are set forth under the TR NO_X Ozone Season Trading Program in subpart BBBBB of part 97 of this chapter must comply with such requirements. The obligation to comply with such requirements will be eliminated by the promulgation of an approval by the Administrator of a revision to Ohio's State Implementation Plan (SIP) as correcting the SIP's deficiency that is the basis for the TR Federal Implementation Plan under § 52.38(b), except to the extent the Administrator's approval is partial or conditional.

(2) Notwithstanding the provisions of paragraph (b)(1) of this section, if, at the time of the approval of Ohio's SIP revision described in paragraph (b)(1) of this section, the Administrator has already started recording any allocations of TR NO_X Ozone Season allowances under subpart BBBBB of part 97 of this chapter to units in the State for a control period in any year, the provisions of subpart BBBBB of part 97 of this chapter authorizing the Administrator to complete the allocation and recordation of TR NO_X Ozone Season allowances to units in the State for each such control period shall continue to apply, unless provided otherwise by such approval of the State's SIP revision.

■ 49. Section 52.1883 is added to read as follows:

§ 52.1883 Interstate pollutant transport provisions; What are the FIP requirements for decreases in emissions of sulfur dioxide?

(a) The owner and operator of each source and each unit located in the State of Ohio and for which requirements are set forth under the TR SO_2 Group 1 Trading Program in subpart CCCCC of part 97 of this chapter must comply with such requirements. The obligation to comply with such requirements will be eliminated by the promulgation of an approval by the Administrator of a revision to Ohio's State Implementation Plan (SIP) as correcting the SIP's deficiency that is the basis for the TR Federal Implementation Plan under § 52.39, except to the extent the Administrator's approval is partial or conditional.

(b) Notwithstanding the provisions of paragraph (a) of this section, if, at the time of the approval of Ohio's SIP

revision described in paragraph (a) of this section, the Administrator has already started recording any allocations of TR SO_2 Group 1 allowances under subpart CCCCC of part 97 of this chapter to units in the State for a control period in any year, the provisions of subpart CCCCC of part 97 of this chapter authorizing the Administrator to complete the allocation and recordation of TR SO_2 Group 1 allowances to units in the State for each such control period shall continue to apply, unless provided otherwise by such approval of the State's SIP revision.

Subpart NN—Pennsylvania

■ 50. Section 52.2040 is added to read as follows:

§ 52.2040 Interstate pollutant transport provisions; What are the FIP requirements for decreases in emissions of nitrogen oxides?

(a)(1) The owner and operator of each source and each unit located in the State of Pennsylvania and for which requirements are set forth under the TR NO_X Annual Trading Program in subpart AAAAA of part 97 of this chapter must comply with such requirements. The obligation to comply with such requirements will be eliminated by the promulgation of an approval by the Administrator of a revision to Pennsylvania's State Implementation Plan (SIP) as correcting the SIP's deficiency that is the basis for the TR Federal Implementation Plan under § 52.38(a), except to the extent the Administrator's approval is partial or conditional.

(2) Notwithstanding the provisions of paragraph (a)(1) of this section, if, at the time of the approval of Pennsylvania's SIP revision described in paragraph (a)(1) of this section, the Administrator has already started recording any allocations of TR NO_X Annual allowances under subpart AAAAA of part 97 of this chapter to units in the State for a control period in any year, the provisions of subpart AAAAA of part 97 of this chapter authorizing the Administrator to complete the allocation and recordation of TR NO_X Annual allowances to units in the State for each such control period shall continue to apply, unless provided otherwise by such approval of the State's SIP revision.

(b)(1) The owner and operator of each source and each unit located in the State of Pennsylvania and for which requirements are set forth under the TR NO_X Ozone Season Trading Program in subpart BBBBB of part 97 of this chapter must comply with such requirements. The obligation to comply with such requirements will be eliminated by the promulgation of an approval by the Administrator of a revision to Pennsylvania's State Implementation Plan (SIP) as correcting the SIP's deficiency that is the basis for the TR Federal Implementation Plan under § 52.38(b), except to the extent the Administrator's approval is partial or conditional.

(2) Notwithstanding the provisions of paragraph (b)(1) of this section, if, at the time of the approval of Pennsylvania's SIP revision described in paragraph (b)(1) of this section, the Administrator has already started recording any allocations of TR NO_X Ozone Season allowances under subpart BBBBB of part 97 of this chapter to units in the State for a control period in any year, the provisions of subpart BBBBB of part 97 of this chapter authorizing the Administrator to complete the allocation and recordation of TR NO_X Ozone Season allowances to units in the State for each such control period shall continue to apply, unless provided otherwise by such approval of the State's SIP revision.

■ 51. Section 52.2041 is added to read as follows:

§ 52.2041 Interstate pollutant transport provisions; What are the FIP requirements for decreases in emissions of sulfur dioxide?

(a) The owner and operator of each source and each unit located in the State of Pennsylvania and for which requirements are set forth under the TR SO_2 Group 1 Trading Program in subpart CCCCC of part 97 of this chapter must comply with such requirements. The obligation to comply with such requirements will be eliminated by the promulgation of an approval by the Administrator of a revision to Pennsylvania's State Implementation Plan (SIP) as correcting the SIP's deficiency that is the basis for the TR Federal Implementation Plan under § 52.39, except to the extent the Administrator's approval is partial or conditional.

(b) Notwithstanding the provisions of paragraph (a) of this section, if, at the time of the approval of Pennsylvania's SIP revision described in paragraph (a) of this section, the Administrator has already started recording any allocations of TR SO_2 Group 1 allowances under subpart CCCCC of part 97 of this chapter to units in the State for a control period in any year, the provisions of subpart CCCCC of part 97 of this chapter authorizing the Administrator to complete the allocation and recordation of TR SO_2 Group 1 allowances to units in the State for each such control period shall continue to apply, unless provided otherwise by such approval of the State's SIP revision.

Subpart PP—South Carolina

■ 52. Section 52.2140 is revised to read as follows:

§ 52.2140 Interstate pollutant transport provisions; What are the FIP requirements for decreases in emissions of nitrogen oxides?

(a)(1) The owner and operator of each source and each unit located in the State of South Carolina and Indian country within the borders of the State and for which requirements are set forth under the TR NO_X Annual Trading Program in subpart AAAAA of part 97 of this chapter must comply with such requirements. The obligation to comply with such requirements with regard to sources and units in the State will be eliminated by the promulgation of an approval by the Administrator of a revision to South Carolina's State Implementation Plan (SIP) as correcting in part the SIP's deficiency that is the basis for the TR Federal Implementation Plan under § 52.38(a), except to the extent the Administrator's approval is partial or conditional. The obligation to comply with such requirements with regard to sources and units located in Indian country within the borders of the State will not be eliminated by the promulgation of an approval by the Administrator of a revision to South Carolina's SIP.

(2) Notwithstanding the provisions of paragraph (a)(1) of this section, if, at the time of the approval of South Carolina's SIP revision described in paragraph (a)(1) of this section, the Administrator has already started recording any allocations of TR NO_X Annual allowances under subpart AAAAA of part 97 of this chapter to units in the State for a control period in any year, the provisions of subpart AAAAA of part 97 of this chapter authorizing the Administrator to complete the allocation and recordation of TR NO_X Annual allowances to units in the State for each such control period shall continue to apply, unless provided otherwise by such approval of the State's SIP revision.

(b)(1) The owner and operator of each source and each unit located in the State of South Carolina and Indian country within the borders of the State and for which requirements are set forth under the TR NO_X Ozone Season Trading Program in subpart BBBBB of part 97 of this chapter must comply with such requirements. The obligation to comply with such requirements with regard to sources and units in the State will be

eliminated by the promulgation of an approval by the Administrator of a revision to South Carolina's State Implementation Plan (SIP) as correcting in part the SIP's deficiency that is the basis for the TR Federal Implementation Plan under § 52.38(b), except to the extent the Administrator's approval is partial or conditional. The obligation to comply with such requirements with regard to sources and units located in Indian country within the borders of the State will not be eliminated by the promulgation of an approval by the Administrator of a revision to South Carolina's SIP.

(2) Notwithstanding the provisions of paragraph (b)(1) of this section, if, at the time of the approval of South Carolina's SIP revision described in paragraph (b)(1) of this section, the Administrator has already started recording any allocations of TR NO_X Ozone Season allowances under subpart BBBBB of part 97 of this chapter to units in the State for a control period in any year, the provisions of subpart BBBBB of part 97 of this chapter authorizing the Administrator to complete the allocation and recordation of TR NO_X Ozone Season allowances to units in the State for each such control period shall continue to apply, unless provided otherwise by such approval of the State's SIP revision.

■ 53. Section 52.2141 is revised to read as follows:

§ 52.2141 Interstate pollutant transport provisions; What are the FIP requirements for decreases in emissions of sulfur dioxide?

(a) The owner and operator of each source and each unit located in the State of South Carolina and Indian country within the borders of the State and for which requirements are set forth under the TR SO_2 Group 2 Trading Program in subpart DDDDD of part 97 of this chapter must comply with such requirements. The obligation to comply with such requirements with regard to sources and units in the State will be eliminated by the promulgation of an approval by the Administrator of a revision to South Carolina's State Implementation Plan (SIP) as correcting in part the SIP's deficiency that is the basis for the TR Federal Implementation Plan under § 52.39, except to the extent the Administrator's approval is partial or conditional. The obligation to comply with such requirements with regard to sources and units located in Indian country within the borders of the State will not be eliminated by the promulgation of an approval by the Administrator of a revision to South Carolina's SIP.

(b) Notwithstanding the provisions of paragraph (a) of this section, if, at the time of the approval of South Carolina's SIP revision described in paragraph (a) of this section, the Administrator has already started recording any allocations of TR SO_2 Group 1 allowances under subpart CCCCC of part 97 of this chapter to units in the State for a control period in any year, the provisions of subpart CCCCC of part 97 of this chapter authorizing the Administrator to complete the allocation and recordation of TR SO_2 Group 1 allowances to units in the State for each such control period shall continue to apply, unless provided otherwise by such approval of the State's SIP revision.

Subpart RR—Tennessee

■ 54. Section 52.2240 is amended by adding new paragraphs (c), (d), and (e) to read as follows:

§ 52.2240 Interstate pollutant transport provisions; What are the FIP requirements for decreases in emissions of nitrogen oxides?

* * * * *

(c) Notwithstanding any provisions of paragraphs (a) and (b) of this section and subparts AA through II and AAAA through IIII of part 97 of this chapter to the contrary:

(1) With regard to any control period that begins after December 31, 2011,

(i) The provisions in paragraphs (a) and (b) of this section relating to NO_X annual or ozone season emissions shall not be applicable; and

(ii) The Administrator will not carry out any of the functions set forth for the Administrator in subparts AA through II and AAAA through IIII of part 97 of this chapter; and

(2) The Administrator will not deduct for excess emissions any CAIR NO_X allowances or CAIR NO_X Ozone Season allowances allocated for 2012 or any year thereafter;

(3) By November 7, 2011, the Administrator will remove from the CAIR NO_X Allowance Tracking System accounts all CAIR NO_X allowances allocated for a control period in 2012 and any subsequent year, and, thereafter, no holding or surrender of CAIR NO_X allowances will be required with regard to emissions or excess emissions for such control periods; and

(4) By November 7, 2011, the Administrator will remove from the CAIR NO_X Ozone Season Allowance Tracking System accounts all CAIR NO_X Ozone Season allowances allocated for a control period in 2012 and any subsequent year, and, thereafter, no holding or surrender of CAIR NO_X Ozone Season allowances will be required with regard to emissions or excess emissions for such control periods.

(d)(1) The owner and operator of each source and each unit located in the State of Tennessee and for which requirements are set forth under the TR NO_X Annual Trading Program in subpart AAAAA of part 97 of this chapter must comply with such requirements. The obligation to comply with such requirements will be eliminated by the promulgation of an approval by the Administrator of a revision to Tennessee's State Implementation Plan (SIP) as correcting the SIP's deficiency that is the basis for the TR Federal Implementation Plan under § 52.38(a), except to the extent the Administrator's approval is partial or conditional. The obligation to comply with such requirements with regard to sources and units located in Indian country within the borders of the State will not be eliminated by the promulgation of an approval by the Administrator of a revision to Tennessee's SIP.

(2) Notwithstanding the provisions of paragraph (d)(1) of this section, if, at the time of the approval of Tennessee's SIP revision described in paragraph (d)(1) of this section, the Administrator has already started recording any allocations of TR NO_X Annual allowances under subpart AAAAA of part 97 of this chapter to units in the State for a control period in any year, the provisions of subpart AAAAA of part 97 of this chapter authorizing the Administrator to complete the allocation and recordation of TR NO_X Annual allowances to units in the State for each such control period shall continue to apply, unless provided otherwise by such approval of the State's SIP revision.

(e)(1) The owner and operator of each source and each unit located in the State of Tennessee and for which requirements are set forth under the TR NO_X Ozone Season Trading Program in subpart BBBBB of part 97 of this chapter must comply with such requirements. The obligation to comply with such requirements will be eliminated by the promulgation of an approval by the Administrator of a revision to Tennessee's State Implementation Plan (SIP) as correcting the SIP's deficiency that is the basis for the TR Federal Implementation Plan under § 52.38(b), except to the extent the Administrator's approval is partial or conditional. The obligation to comply with such requirements with regard to sources and units located in Indian country within the borders of the State will not be eliminated by the promulgation of an

approval by the Administrator of a revision to Tennessee's SIP.

(2) Notwithstanding the provisions of paragraph (e)(1) of this section, if, at the time of the approval of Tennessee's SIP revision described in paragraph (e)(1) of this section, the Administrator has already started recording any allocations of TR NO_X Ozone Season allowances under subpart BBBBB of part 97 of this chapter to units in the State for a control period in any year, the provisions of subpart BBBBB of part 97 of this chapter authorizing the Administrator to complete the allocation and recordation of TR NO_X Ozone Season allowances to units in the State for each such control period shall continue to apply, unless provided otherwise by such approval of the State's SIP revision.

■ 55. Section 52.2241 is amended by designating the existing text as paragraph (a) and adding new paragraphs (b) and (c) to read as follows:

§ 52.2241 Interstate pollutant transport provisions; What are the FIP requirements for decreases in emissions of sulfur dioxide?

* * * * *

(b) Notwithstanding any provisions of paragraph (a) of this section and subparts AAA through III of part 97 of this chapter and any State's SIP to the contrary:

(1) With regard to any control period that begins after December 31, 2011,

(i) The provisions of paragraph (a) of this section relating to SO_2 emissions shall not be applicable; and

(ii) The Administrator will not carry out any of the functions set forth for the Administrator in subparts AAA through III of part 97 of this chapter; and

(2) The Administrator will not deduct for excess emissions any CAIR SO_2 allowances allocated for 2012 or any year thereafter.

(c)(1) The owner and operator of each source and each unit located in the State of Tennessee and for which requirements are set forth under the TR SO_2 Group 1 Trading Program in subpart CCCCC of part 97 of this chapter must comply with such requirements. The obligation to comply with such requirements will be eliminated by the promulgation of an approval by the Administrator of a revision to Tennessee's State Implementation Plan (SIP) as correcting the SIP's deficiency that is the basis for the TR Federal Implementation Plan under § 52.39, except to the extent the Administrator's approval is partial or conditional. The obligation to comply with such requirements with regard to sources and units located in Indian country within the borders of the State will not be eliminated by the promulgation of an approval by the Administrator of a revision to Tennessee's SIP.

(2) Notwithstanding the provisions of paragraph (c)(1) of this section, if, at the time of the approval of Tennessee's SIP revision described in paragraph (c)(1) of this section, the Administrator has already started recording any allocations of TR SO_2 Group 1 allowances under subpart CCCCC of part 97 of this chapter to units in the State for a control period in any year, the provisions of subpart CCCCC of part 97 of this chapter authorizing the Administrator to complete the allocation and recordation of TR SO_2 Group 1 allowances to units in the State for each such control period shall continue to apply, unless provided otherwise by such approval of the State's SIP revision.

Subpart SS—Texas

■ 56. Section 52.2283 is amended by adding new paragraphs (b), (c) and (d) to read as follows:

§ 52.2283 Interstate pollutant transport provisions; What are the FIP requirements for decreases in emissions of nitrogen oxides?

* * * * *

(b) Notwithstanding any provisions of paragraph (a) of this section and subparts AA through II of part 97 of this chapter to the contrary:

(1) With regard to any control period that begins after December 31, 2011,

(i) The provisions in paragraph (a) of this section relating to NO_X annual emissions shall not be applicable; and

(ii) The Administrator will not carry out any of the functions set forth for the Administrator in subparts AA through II of part 97 of this chapter;

(2) The Administrator will not deduct for excess emissions any CAIR NO_X allowances allocated for 2012 or any year thereafter;

(3) By November 7, 2011, the Administrator will remove from the CAIR NO_X Allowance Tracking System accounts all CAIR NO_X allowances allocated for a control period in 2012 and any subsequent year, and, thereafter, no holding or surrender of CAIR NO_X allowances will be required with regard to emissions or excess emissions for such control periods.

(c)(1) The owner and operator of each source and each unit located in the State of Texas and Indian country within the borders of the State and for which requirements are set forth under the TR NO_X Annual Trading Program in subpart AAAAA of part 97 of this chapter must comply with such requirements. The obligation to comply with such requirements with regard to sources and units in the State will be eliminated by the promulgation of an approval by the Administrator of a revision to Texas' State Implementation Plan (SIP) as correcting in part the SIP's deficiency that is the basis for the TR Federal Implementation Plan under § 52.38(a), except to the extent the Administrator's approval is partial or conditional. The obligation to comply with such requirements with regard to sources and units located in Indian country within the borders of the State will not be eliminated by the promulgation of an approval by the Administrator of a revision to Texas' SIP.

(2) Notwithstanding the provisions of paragraph (c)(1) of this section, if, at the time of the approval of Texas' SIP revision described in paragraph (c)(1) of this section, the Administrator has already started recording any allocations of TR NO_X Annual allowances under subpart AAAAA of part 97 of this chapter to units in the State for a control period in any year, the provisions of subpart AAAAA of part 97 of this chapter authorizing the Administrator to complete the allocation and recordation of TR NO_X Annual allowances to units in the State for each such control period shall continue to apply, unless provided otherwise by such approval of the State's SIP revision.

(d)(1) The owner and operator of each source and each unit located in the State of Texas and Indian country within the borders of the State and for which requirements are set forth under the TR NO_X Ozone Season Trading Program in subpart BBBBB of part 97 of this chapter must comply with such requirements. The obligation to comply with such requirements with regard to sources and units in the State will be eliminated by the promulgation of an approval by the Administrator of a revision to Texas' State Implementation Plan (SIP) as correcting in part the SIP's deficiency that is the basis for the TR Federal Implementation Plan under § 52.38(b), except to the extent the Administrator's approval is partial or conditional. The obligation to comply with such requirements with regard to sources and units located in Indian country within the borders of the State will not be eliminated by the promulgation of an approval by the Administrator of a revision to Texas' SIP.

(2) Notwithstanding the provisions of paragraph (d)(1) of this section, if, at the time of the approval of Texas' SIP revision described in paragraph (d)(1) of this section, the Administrator has already started recording any allocations of TR NO_X Ozone Season allowances under subpart BBBBB of part 97 of this

chapter to units in the State for a control period in any year, the provisions of subpart BBBBB of part 97 of this chapter authorizing the Administrator to complete the allocation and recordation of TR NO_X Ozone Season allowances to units in the State for each such control period shall continue to apply, unless provided otherwise by such approval of the State's SIP revision.

■ 57. Section 52.2284 is amended by designating the existing text as paragraph (a) and adding new paragraphs (b) and (c) to read as follows:

§ 52.2284 Interstate pollutant transport provisions; What are the FIP requirements for decreases in emissions of sulfur dioxide?

* * * * *

(b) Notwithstanding any provisions of paragraph (a) of this section and subparts AAA through III of part 97 of this chapter and any State's SIP to the contrary:

(1) With regard to any control period that begins after December 31, 2011,

(i) The provisions of paragraph (a) of this section relating to SO_2 emissions shall not be applicable; and

(ii) The Administrator will not carry out any of the functions set forth for the Administrator in subparts AAA through III of part 97 of this chapter; and

(2) The Administrator will not deduct for excess emissions any CAIR SO_2 allowances allocated for 2012 or any year thereafter.

(c)(1) The owner and operator of each source and each unit located in the State of Texas and Indian country within the borders of the State and for which requirements are set forth under the TR SO_2 Group 2 Trading Program in subpart DDDDD of part 97 of this chapter must comply with such requirements. The obligation to comply with such requirements with regard to sources and units in the State will be eliminated by the promulgation of an approval by the Administrator of a revision to Texas' State Implementation Plan (SIP) as correcting in part the SIP's deficiency that is the basis for the TR Federal Implementation Plan under § 52.39, except to the extent the Administrator's approval is partial or conditional. The obligation to comply with such requirements with regard to sources and units located in Indian country within the borders of the State will not be eliminated by the promulgation of an approval by the Administrator of a revision to Texas' SIP.

(2) Notwithstanding the provisions of paragraph (c)(1) of this section, if, at the time of the approval of Texas' SIP revision described in paragraph (c)(1) of this section, the Administrator has already started recording any allocations of TR SO_2 Group 2 allowances under subpart DDDDD of part 97 of this chapter to units in the State for a control period in any year, the provisions of subpart DDDDD of part 97 of this chapter authorizing the Administrator to complete the allocation and recordation of TR SO_2 Group 2 allowances to units in the State for each such control period shall continue to apply, unless provided otherwise by such approval of the State's SIP revision.

Subpart VV—Virginia

■ 58. Section 52.2440 is added to read as follows:

§ 52.2440 Interstate pollutant transport provisions; What are the FIP requirements for decreases in emissions of nitrogen oxides?

(a)(1) The owner and operator of each source and each unit located in the State of Virginia and for which requirements are set forth under the TR NO_X Annual Trading Program in subpart AAAAA of part 97 of this chapter must comply with such requirements. The obligation to comply with such requirements will be eliminated by the promulgation of an approval by the Administrator of a revision to Virginia's State Implementation Plan (SIP) as correcting the SIP's deficiency that is the basis for the TR Federal Implementation Plan under § 52.38(a), except to the extent the Administrator's approval is partial or conditional.

(2) Notwithstanding the provisions of paragraph (a)(1) of this section, if, at the time of the approval of Virginia's SIP revision described in paragraph (a)(1) of this section, the Administrator has already started recording any allocations of TR NO_X Annual allowances under subpart AAAAA of part 97 of this chapter to units in the State for a control period in any year, the provisions of subpart AAAAA of part 97 of this chapter authorizing the Administrator to complete the allocation and recordation of TR NO_X Annual allowances to units in the State for each such control period shall continue to apply, unless provided otherwise by such approval of the State's SIP revision.

(b)(1) The owner and operator of each source and each unit located in the State of Virginia and for which requirements are set forth under the TR NO_X Ozone Season Trading Program in subpart BBBBB of part 97 of this chapter must comply with such requirements. The obligation to comply with such requirements will be eliminated by the promulgation of an approval by the Administrator of a revision to Virginia's State Implementation Plan (SIP) as correcting the SIP's deficiency that is the basis for the TR Federal Implementation Plan under § 52.38(b), except to the extent the Administrator's approval is partial or conditional.

(2) Notwithstanding the provisions of paragraph (b)(1) of this section, if, at the time of the approval of Virginia's SIP revision described in paragraph (b)(1) of this section, the Administrator has already started recording any allocations of TR NO_X Ozone Season allowances under subpart BBBBB of part 97 of this chapter to units in the State for a control period in any year, the provisions of subpart BBBBB of part 97 of this chapter authorizing the Administrator to complete the allocation and recordation of TR NO_X Ozone Season allowances to units in the State for each such control period shall continue to apply, unless provided otherwise by such approval of the State's SIP revision.

■ 59. Section 52.2241 is added to read as follows:

§ 52.2241 Interstate pollutant transport provisions; What are the FIP requirements for decreases in emissions of sulfur dioxide?

(a) The owner and operator of each source and each unit located in the State of Virginia and for which requirements are set forth under the TR SO_2 Group 1 Trading Program in subpart CCCCC of part 97 of this chapter must comply with such requirements. The obligation to comply with such requirements will be eliminated by the promulgation of an approval by the Administrator of a revision to Virginia's State Implementation Plan (SIP) as correcting the SIP's deficiency that is the basis for the TR Federal Implementation Plan under § 52.39, except to the extent the Administrator's approval is partial or conditional.

(b) Notwithstanding the provisions of paragraph (a) of this section, if, at the time of the approval of Virginia's SIP revision described in paragraph (a) of this section, the Administrator has already started recording any allocations of TR SO_2 Group 1 allowances under subpart CCCCC of part 97 of this chapter to units in the State for a control period in any year, the provisions of subpart CCCCC of part 97 of this chapter authorizing the Administrator to complete the allocation and recordation of TR SO_2 Group 1 allowances to units in the State for each such control period shall continue to apply, unless provided otherwise by such approval of the State's SIP revision.

Subpart XX—West Virginia

■ 60. Section 52.2540 is added to read as follows:

§ 52.2540 Interstate pollutant transport provisions; What are the FIP requirements for decreases in emissions of nitrogen oxides?

(a)(1) The owner and operator of each source and each unit located in the State of West Virginia and for which requirements are set forth under the TR NO_X Annual Trading Program in subpart AAAAA of part 97 of this chapter must comply with such requirements. The obligation to comply with such requirements will be eliminated by the promulgation of an approval by the Administrator of a revision to West Virginia's State Implementation Plan (SIP) as correcting the SIP's deficiency that is the basis for the TR Federal Implementation Plan under § 52.38(a), except to the extent the Administrator's approval is partial or conditional.

(2) Notwithstanding the provisions of paragraph (a)(1) of this section, if, at the time of the approval of West Virginia's SIP revision described in paragraph (a)(1) of this section, the Administrator has already started recording any allocations of TR NO_X Annual allowances under subpart AAAAA of part 97 of this chapter to units in the State for a control period in any year, the provisions of subpart AAAAA of part 97 of this chapter authorizing the Administrator to complete the allocation and recordation of TR NO_X Annual allowances to units in the State for each such control period shall continue to apply, unless provided otherwise by such approval of the State's SIP revision.

(b)(1) The owner and operator of each source and each unit located in the State of West Virginia and for which requirements are set forth under the TR NO_X Ozone Season Trading Program in subpart BBBBB of part 97 of this chapter must comply with such requirements. The obligation to comply with such requirements will be eliminated by the promulgation of an approval by the Administrator of a revision to West Virginia's State Implementation Plan (SIP) as correcting the SIP's deficiency that is the basis for the TR Federal Implementation Plan under § 52.38(b), except to the extent the Administrator's approval is partial or conditional.

(2) Notwithstanding the provisions of paragraph (b)(1) of this section, if, at the time of the approval of West Virginia's SIP revision described in paragraph (b)(1) of this section, the Administrator has already started recording any allocations of TR NO_X Ozone Season allowances under subpart BBBBB of part 97 of this chapter to units in the State for a control period in any year, the provisions of subpart BBBBB of part 97 of this chapter authorizing the Administrator to complete the allocation and recordation of TR NO_X Ozone Season allowances to units in the State for each such control period shall continue to apply, unless provided otherwise by such approval of the State's SIP revision.

■ 61. Section 52.2541 is added to read as follows:

§ 52.2541 Interstate pollutant transport provisions; What are the FIP requirements for decreases in emissions of sulfur dioxide?

(a) The owner and operator of each source and each unit located in the State of West Virginia and for which requirements are set forth under the TR SO_2 Group 1 Trading Program in subpart CCCCC of part 97 of this chapter must comply with such requirements. The obligation to comply with such requirements will be eliminated by the promulgation of an approval by the Administrator of a revision to West Virginia's State Implementation Plan (SIP) as correcting the SIP's deficiency that is the basis for the TR Federal Implementation Plan under § 52.39, except to the extent the Administrator's approval is partial or conditional.

(b) Notwithstanding the provisions of paragraph (a) of this section, if, at the time of the approval of West Virginia's SIP revision described in paragraph (a) of this section, the Administrator has already started recording any allocations of TR SO_2 Group 1 allowances under subpart CCCCC of part 97 of this chapter to units in the State for a control period in any year, the provisions of subpart CCCCC of part 97 of this chapter authorizing the Administrator to complete the allocation and recordation of TR SO_2 Group 1 allowances to units in the State for each such control period shall continue to apply, unless provided otherwise by such approval of the State's SIP revision.

Subpart YY—Wisconsin

■ 62. Section 52.2587 is amended by adding new paragraphs (c) and (d) to read as follows:

§ 52.2587 Interstate pollutant transport provisions; What are the FIP requirements for decreases in emissions of nitrogen oxides?

* * * * *

(c) Notwithstanding any provisions of paragraphs (a) and (b) of this section and subparts AA through II and AAAA through IIII of part 97 of this chapter to the contrary:

(1) With regard to any control period that begins after December 31, 2011,

(i) The provisions in paragraphs (a) and (b) of this section relating to NO_X annual or ozone season emissions shall not be applicable; and

(ii) The Administrator will not carry out any of the functions set forth for the Administrator in subparts AA through II and AAAA through IIII of part 97 of this chapter; and

(2) The Administrator will not deduct for excess emissions any CAIR NO_X allowances or CAIR NO_X Ozone Season allowances allocated for 2012 or any year thereafter;

(3) By November 7, 2011, the Administrator will remove from the CAIR NO_X Allowance Tracking System accounts all CAIR NO_X allowances allocated for a control period in 2012 and any subsequent year, and, thereafter, no holding or surrender of CAIR NO_X allowances will be required with regard to emissions or excess emissions for such control periods; and

(4) By November 7, 2011, the Administrator will remove from the CAIR NO_X Ozone Season Allowance Tracking System accounts all CAIR NO_X Ozone Season allowances allocated for a control period in 2012 and any subsequent year, and, thereafter, no holding or surrender of CAIR NO_X Ozone Season allowances will be required with regard to emissions or excess emissions for such control periods.

(d)(1) The owner and operator of each source and each unit located in the State of Wisconsin and Indian country within the borders of the State and for which requirements are set forth under the TR NO_X Annual Trading Program in subpart AAAAA of part 97 of this chapter must comply with such requirements. The obligation to comply with such requirements with regard to sources and units in the State will be eliminated by the promulgation of an approval by the Administrator of a revision to Wisconsin's State Implementation Plan (SIP) as correcting in part the SIP's deficiency that is the basis for the TR Federal Implementation Plan under § 52.38(a), except to the extent the Administrator's approval is partial or conditional. The obligation to comply with such requirements with regard to sources and units located in Indian country within the borders of the State will not be eliminated by the promulgation of an approval by the Administrator of a revision to Wisconsin's SIP.

(2) Notwithstanding the provisions of paragraph (d)(1) of this section, if, at the

time of the approval of Wisconsin's SIP revision described in paragraph (d)(1) of this section, the Administrator has already started recording any allocations of TR NO_X Annual allowances under subpart AAAAA of part 97 of this chapter to units in the State for a control period in any year, the provisions of subpart AAAAA of part 97 of this chapter authorizing the Administrator to complete the allocation and recordation of TR NO_X Annual allowances to units in the State for each such control period shall continue to apply, unless provided otherwise by such approval of the State's SIP revision.

■ 63. Section 52.2588 is amended by designating the existing text as paragraph (a) and adding new paragraphs (b) and (c) to read as follows:

§ 52.2588 Interstate pollutant transport provisions; What are the FIP requirements for decreases in emissions of sulfur dioxide?

* * * * *

(b) Notwithstanding any provisions of paragraph (a) of this section and subparts AAA through III of part 97 of this chapter and any State's SIP to the contrary:

(1) With regard to any control period that begins after December 31, 2011,

(i) The provisions of paragraph (a) of this section relating to SO_2 emissions shall not be applicable; and

(ii) The Administrator will not carry out any of the functions set forth for the Administrator in subparts AAA through III of part 97 of this chapter; and

(2) The Administrator will not deduct for excess emissions any CAIR SO_2 allowances allocated for 2012 or any year thereafter.

(c)(1) The owner and operator of each source and each unit located in the State of Wisconsin and Indian country within the borders of the State and for which requirements are set forth under the TR SO_2 Group 1 Trading Program in subpart CCCCC of part 97 of this chapter must comply with such requirements. The obligation to comply with such requirements with regard to sources and units in the State will be eliminated by the promulgation of an approval by the Administrator of a revision to Wisconsin's State Implementation Plan (SIP) as correcting in part the SIP's deficiency that is the basis for the TR Federal Implementation Plan under § 52.39, except to the extent the Administrator's approval is partial or conditional. The obligation to comply with such requirements with regard to sources and units located in Indian country within the borders of the State will not be eliminated by the promulgation of an approval by the Administrator of a revision to Wisconsin's SIP.

(2) Notwithstanding the provisions of paragraph (c)(1) of this section, if, at the time of the approval of Wisconsin's SIP revision described in paragraph (c)(1) of this section, the Administrator has already started recording any allocations of TR SO_2 Group 1 allowances under subpart CCCCC of part 97 of this chapter to units in the State for a control period in any year, the provisions of subpart CCCCC of part 97 of this chapter authorizing the Administrator to complete the allocation and recordation of TR SO_2 Group 1 allowances to units in the State for each such control period shall continue to apply, unless provided otherwise by such approval of the State's SIP revision.

PART 72—[AMENDED]

■ 64. The authority citation for part 72 is revised to read as follows:

Authority: 42 U.S.C. 7401, 7403, 7410, 7411, 7426, 7601, *et seq.*

§ 72.2 [Amended]

■ 65. Section 72.2 is amended by removing the definition of ''Interested person''.

PART 78—[AMENDED]

■ 66. The authority citation for part 78 continues to read as follows:

Authority: 42 U.S.C. 7401, 7403, 7410, 7411, 7426, 7601, *et seq.*

■ 67. Section 78.1 is amended by adding paragraphs (b)(13) through (b)(16) to read as follows:

§ 78.1 Purpose and scope.

* * * * *

(b) * * *

(13) Under subpart AAAAA of part 97 of this chapter,

(i) The decision on allocation of TR NO_X Annual allowances under § 97.411(a)(2) and (b) of this chapter.

(ii) The decision on the transfer of TR NO_X Annual allowances under § 97.423 of this chapter.

(iii) The decision on the deduction of TR NO_X Annual allowances under §§ 97.424 and 97.425 of this chapter.

(iv) The correction of an error in an Allowance Management System account under § 97.427 of this chapter.

(v) The adjustment of information in a submission and the decision on the deduction and transfer of TR NO_X Annual allowances based on the information as adjusted under § 97.428 of this chapter.

(vi) The finalization of control period emissions data, including retroactive adjustment based on audit.

(vii) The approval or disapproval of a petition under § 97.435 of this chapter.

(14) Under subpart BBBBB of part 97 of this chapter,

(i) The decision on allocation of TR NO_X Ozone Season allowances under § 97.511(a)(2) and (b) of this chapter.

(ii) The decision on the transfer of TR NO_X Ozone Season allowances under § 97.523 of this chapter.

(iii) The decision on the deduction of TR NO_X Ozone Season allowances under §§ 97.524 and 97.525 of this chapter.

(iv) The correction of an error in an Allowance Management System account under § 97.527 of this chapter.

(v) The adjustment of information in a submission and the decision on the deduction and transfer of TR NO_X Ozone Season allowances based on the information as adjusted under § 97.528 of this chapter.

(vi) The finalization of control period emissions data, including retroactive adjustment based on audit.

(vii) The approval or disapproval of a petition under § 97.535 of this chapter.

(15) Under subpart CCCCC of part 97 of this chapter,

(i) The decision on allocation of TR SO_2 Group 1 allowances under § 97.611(a)(2) and (b) of this chapter.

(ii) The decision on the transfer of TR SO_2 Group 1 allowances under § 97.623 of this chapter.

(iii) The decision on the deduction of TR SO_2 Group 1 allowances under §§ 97.624 and 97.625 of this chapter.

(iv) The correction of an error in an Allowance Management System account under § 97.627 of this chapter.

(v) The adjustment of information in a submission and the decision on the deduction and transfer of TR SO_2 Group 1 allowances based on the information as adjusted under § 97.628 of this chapter.

(vi) The finalization of control period emissions data, including retroactive adjustment based on audit.

(vii) The approval or disapproval of a petition under § 97.635 of this chapter.

(16) Under subpart DDDDD of part 97 of this chapter,

(i) The decision on allocation of TR SO_2 Group 2 allowances under § 97.711(a)(2) and (b) of this chapter.

(ii) The decision on the transfer of TR SO_2 Group 1 allowances under § 97.723 of this chapter.

(iii) The decision on the deduction of TR SO_2 Group 1 allowances under §§ 97.724 and 97.725 of this chapter.

(iv) The correction of an error in an Allowance Management System account under § 97.727 of this chapter.

(v) The adjustment of information in a submission and the decision on the

deduction and transfer of TR SO_2 Group 1 allowances based on the information as adjusted under § 97.728 of this chapter.

(vi) The finalization of control period emissions data, including retroactive adjustment based on audit.

(vii) The approval or disapproval of a petition under § 97.735 of this chapter.

* * * * *

■ 68. Section 78.2 is revised to read as follows:

§ 78.2 General.

(a) *Definitions.* (1) The terms used in this subpart with regard to a decision of the Administrator that is appealed under this section shall have the meaning as set forth in the regulations under which the Administrator made such decision and as set forth in paragraph (a)(2) of this section.

(2) *Interested person* means, with regard to a decision of the Administrator:

(i) Any person who submitted comments, or testified at a public hearing, pursuant to an opportunity for comment provided by the Administrator as part of the process of making such decision;

(ii) Who submitted objections pursuant to an opportunity for objections provided by the Administrator as part of the process of making such decision; or

(iii) Who submitted, to the Administrator and in a format prescribed by the Administrator, his or her name, service address, telephone number, and facsimile number and identified such decision in order to be placed on a list of persons interested in such decision;

(iv) Provided that the Administrator may update the list of interested persons from time to time by requesting additional written indication of continued interest from the persons listed and may delete from the list the name of any person failing to respond as requested.

(b) *Availability of information.* The availability to the public of information provided to, or otherwise obtained by, the Administrator under this subpart shall be governed by part 2 of this chapter.

(c) *Computation of time.* (1) In computing any period of time prescribed or allowed under this part, except as otherwise provided, the day of the event from which the period begins to run shall not be included, and Saturdays, Sundays, and federal holidays shall be included. When the period ends on a Saturday, Sunday, or federal holiday, the stated period shall be extended to include the next business day.

(2) Where a document is served by first class mail or commercial delivery service, but not by overnight or same-day delivery, 5 days shall be added to the time prescribed or allowed under this part for the filing of a responsive document or for otherwise responding.

■ 69. Section 78.3 is amended by:

■ a. In paragraphs (a)(1)(iii), (a)(3)(ii), (a)(4)(ii), (a)(5)(ii), (a)(6)(ii), (a)(7)(ii), (a)(8)(ii), and (a)(9)(ii), adding, after the word ''person'', the words ''with regard to the decision''.

■ b. Adding paragraph (a)(10);

■ c. In paragraph (b)(3)(i), removing the words ''paragraph (a)(1) and (2)'' and adding, in their place, the words ''paragraph (a)(1), (2), and (10)''; and

■ d. Adding paragraph (d)(11) to read as follows:

§ 78.3 Petition for administrative review and request or evidentiary hearing.

(a) * * *

(10) The following persons may petition for administrative review of a decision of the Administrator that is made under subparts AAAAA, BBBBB, CCCCC, and DDDDD of part 97 of this chapter:

(i) The designated representative for a unit or source, or the authorized account representative for any Allowance Management System account, covered by the decision; or

(ii) Any interested person with regard to the decision.

* * * * *

(d) * * *

(11) Any provision or requirement of subparts AAAAA, BBBBB, CCCCC, or DDDDD of part 97 of this chapter, including the standard requirements under § 97.406, § 97.506, § 97.606, or § 97.706 of this chapter and any emission monitoring or reporting requirements.

* * * * *

■ 70. Section 78.4 is amended by:

■ a. Revising paragraph (a) by:

■ i. Removing the first, second, third, fourth, fifth, and last sentences;

■ ii. In the sixth and seventh sentences, removing the words ''interest in'' and adding, in their place, the words ''ownership interest with respect to'';

■ iii. Redesignating the paragraph as paragraph (a)(1)(iii); and

■ b. Adding paragraphs (a)(1) introductory text, (a)(1)(i), and (a)(1)(ii); and

■ c. Revising paragraph (a)(2) to read as follows:

§ 78.4 Filings.

(a)(1) All original filings made under this part shall be signed by the person making the filing or by an attorney or authorized representative, in accordance with the following requirements:

(i) Any filings on behalf of owners and operators of a affected unit or affected source, TR NO_X Annual unit or TR NO_X Annual source, TR NO_X Ozone Season unit or TR NO_X Ozone Season source, TR SO_2 Group 1 unit or TR SO_2 Group 1 source, TR SO_2 Group 2 unit or TR SO_2 Group 2 source, or a unit for which a TR opt-in application is submitted and not withdrawn shall be signed by the designated representative. Any filing on behalf of persons with an ownership interest with respect to allowances, TR NO_X Annual allowances, TR NO_X Ozone Season allowances, TR SO_2 Group 1 allowances, or TR SO_2 Group 2 allowances in a general account shall be signed by the authorized account representative.

(ii) Any filings on behalf of owners and operators of a NO_X Budget unit or NO_X Budget source shall be signed by the NO_X authorized account representative. Any filing on behalf of persons with an ownership interest with respect to NO_X allowances in a general account shall be signed by the NO_X authorized account representative.

* * * * *

(2) The name, address, e-mail address (if any), telephone number, and facsimile number (if any) of the person making the filing shall be provided with the filing.

* * * * *

§ 78.5 [Amended]

■ 71. Section 78.5 is amended by, in paragraph (a):

■ a. Removing the words ''public comment prior to'' and adding, in their place, the words ''submission of public comments or objections prior to'';

■ b. Removing the words ''public comment period'' whenever they appear and adding, in their place, the words ''period for submission of public comments or objections''.

§ 78.12 [Amended]

■ 72. Section 78.12 is amended by, in paragraph (a), removing the words ''public comment'' and adding, in their place, the words ''submission of public comments or objections''.

PART 97—[AMENDED]

■ 73. The authority citation for part 97 continues to read as follows:

Authority: 42 U.S.C. 7401, 7403, 7410, 7426, 7601, and 7651, *et seq.*

■ 74. Part 97 is amended by adding subpart AAAAA to read as follows:

Subpart AAAAA—TR NO_X Annual Trading Program

97.401 Purpose.
97.402 Definitions.
97.403 Measurements, abbreviations, and acronyms.
97.404 Applicability.
97.405 Retired unit exemption.
97.406 Standard requirements.
97.407 Computation of time.
97.408 Administrative appeal procedures.
97.409 [Reserved]
97.410 State NO_X Annual trading budgets, new unit set-asides, Indian country new unit set-asides and variability limits.
97.411 Timing requirements for TR NO_X Annual allowance allocations.
97.412 TR NO_X Annual allowance allocations to new units.
97.413 Authorization of designated representative and alternate designated representative.
97.414 Responsibilities of designated representative and alternate designated representative.
97.415 Changing designated representative and alternate designated representative; changes in owners and operators.
97.416 Certificate of representation.
97.417 Objections concerning designated representative and alternate designated representative.
97.418 Delegation by designated representative and alternate designated representative.
97.419 [Reserved]
97.420 Establishment of compliance accounts and general accounts.
97.421 Recordation of TR NO_X Annual allowance allocations.
97.422 Submission of TR NO_X Annual allowance transfers.
97.423 Recordation of TR NO_X Annual allowance transfers.
97.424 Compliance with TR NO_X Annual emissions limitation.
97.425 Compliance with TR NO_X Annual assurance provisions.
97.426 Banking.
97.427 Account error.
97.428 Administrator's action on submissions.
97.429 [RESERVED]
97.430 General monitoring, recordkeeping, and reporting requirements.
97.431 Initial monitoring system certification and recertification procedures.
97.432 Monitoring system out-of-control periods.
97.433 Notifications concerning monitoring.
97.434 Recordkeeping and reporting.
97.435 Petitions for alternatives to monitoring, recordkeeping, or reporting requirements.

Subpart AAAAA—TR NO_X Annual Trading Program

§ 97.401 Purpose.

This subpart sets forth the general, designated representative, allowance, and monitoring provisions for the Transport Rule (TR) NO_X Annual Trading Program, under section 110 of the Clean Air Act and § 52.38 of this chapter, as a means of mitigating interstate transport of fine particulates and nitrogen oxides.

§ 97.402 Definitions.

The terms used in this subpart shall have the meanings set forth in this section as follows:

Acid Rain Program means a multi-state SO_2 and NO_X air pollution control and emission reduction program established by the Administrator under title IV of the Clean Air Act and parts 72 through 78 of this chapter.

Administrator means the Administrator of the United States Environmental Protection Agency or the Director of the Clean Air Markets Division (or its successor determined by the Administrator) of the United States Environmental Protection Agency, the Administrator's duly authorized representative under this subpart.

Allocate or *allocation* means, with regard to TR NO_X Annual allowances, the determination by the Administrator, State, or permitting authority, in accordance with this subpart and any SIP revision submitted by the State and approved by the Administrator under § 52.38(a)(3), (4), or (5) of this chapter, of the amount of such TR NO_X Annual allowances to be initially credited, at no cost to the recipient, to:

(1) A TR NO_X Annual unit;

(2) A new unit set-aside;

(3) An Indian country new unit set-aside; or

(4) An entity not listed in paragraphs (1) through (3) of this definition;

(5) Provided that, if the Administrator, State, or permitting authority initially credits, to a TR NO_X Annual unit qualifying for an initial credit, a credit in the amount of zero TR NO_X Annual allowances, the TR NO_X Annual unit will be treated as being allocated an amount (*i.e.,* zero) of TR NO_X Annual allowances.

Allowable NO_X *emission rate* means, for a unit, the most stringent State or federal NO_X emission rate limit (in lb/MWhr or, if in lb/mmBtu, converted to lb/MWhr by multiplying it by the unit's heat rate in mmBtu/MWhr) that is applicable to the unit and covers the longest averaging period not exceeding one year.

Allowance Management System means the system by which the Administrator records allocations, deductions, and transfers of TR NO_X Annual allowances under the TR NO_X Annual Trading Program. Such allowances are allocated, recorded, held, deducted, or transferred only as whole allowances.

Allowance Management System account means an account in the Allowance Management System established by the Administrator for purposes of recording the allocation, holding, transfer, or deduction of TR NO_X Annual allowances.

Allowance transfer deadline means, for a control period in a given year, midnight of March 1 (if it is a business day), or midnight of the first business day thereafter (if March 1 is not a business day), immediately after such control period and is the deadline by which a TR NO_X Annual allowance transfer must be submitted for recordation in a TR NO_X Annual source's compliance account in order to be available for use in complying with the source's TR NO_X Annual emissions limitation for such control period in accordance with §§ 97.406 and 97.424.

Alternate designated representative means, for a TR NO_X Annual source and each TR NO_X Annual unit at the source, the natural person who is authorized by the owners and operators of the source and all such units at the source, in accordance with this subpart, to act on behalf of the designated representative in matters pertaining to the TR NO_X Annual Trading Program. If the TR NO_X Annual source is also subject to the Acid Rain Program, TR NO_X Ozone Season Trading Program, TR SO_2 Group 1 Trading Program, or TR SO_2 Group 2 Trading Program, then this natural person shall be the same natural person as the alternate designated representative, as defined in the respective program.

Assurance account means an Allowance Management System account, established by the Administrator under § 97.425(b)(3) for certain owners and operators of a group of one or more TR NO_X Annual sources and units in a given State (and Indian country within the borders of such State), in which are held TR NO_X Annual allowances available for use for a control period in a given year in complying with the TR NO_X Annual assurance provisions in accordance with §§ 97.406 and 97.425.

Authorized account representative means, for a general account, the natural person who is authorized, in accordance with this subpart, to transfer and otherwise dispose of TR NO_X Annual allowances held in the general account and, for a TR NO_X Annual source's compliance account, the designated representative of the source.

Automated data acquisition and handling system or *DAHS* means the component of the continuous emission monitoring system, or other emissions monitoring system approved for use

under this subpart, designed to interpret and convert individual output signals from pollutant concentration monitors, flow monitors, diluent gas monitors, and other component parts of the monitoring system to produce a continuous record of the measured parameters in the measurement units required by this subpart.

Biomass means—

(1) Any organic material grown for the purpose of being converted to energy;

(2) Any organic byproduct of agriculture that can be converted into energy; or

(3) Any material that can be converted into energy and is nonmerchantable for other purposes, that is segregated from other material that is nonmerchantable for other purposes, and that is;

(i) A forest-related organic resource, including mill residues, precommercial thinnings, slash, brush, or byproduct from conversion of trees to merchantable material; or

(ii) A wood material, including pallets, crates, dunnage, manufacturing and construction materials (other than pressure-treated, chemically-treated, or painted wood products), and landscape or right-of-way tree trimmings.

Boiler means an enclosed fossil- or other-fuel-fired combustion device used to produce heat and to transfer heat to recirculating water, steam, or other medium.

Bottoming-cycle unit means a unit in which the energy input to the unit is first used to produce useful thermal energy, where at least some of the reject heat from the useful thermal energy application or process is then used for electricity production.

Business day means a day that does not fall on a weekend or a federal holiday.

Certifying official means a natural person who is:

(1) For a corporation, a president, secretary, treasurer, or vice-president of the corporation in charge of a principal business function or any other person who performs similar policy- or decision-making functions for the corporation;

(2) For a partnership or sole proprietorship, a general partner or the proprietor respectively; or

(3) For a local government entity or State, federal, or other public agency, a principal executive officer or ranking elected official.

Clean Air Act means the Clean Air Act, 42 U.S.C. 7401, *et seq.*

Coal means ''coal'' as defined in § 72.2 of this chapter.

Coal-derived fuel means any fuel (whether in a solid, liquid, or gaseous state) produced by the mechanical, thermal, or chemical processing of coal.

Cogeneration system means an integrated group, at a source, of equipment (including a boiler, or combustion turbine, and a steam turbine generator) designed to produce useful thermal energy for industrial, commercial, heating, or cooling purposes and electricity through the sequential use of energy.

Cogeneration unit means a stationary, fossil-fuel-fired boiler or stationary, fossil-fuel-fired combustion turbine that is a topping-cycle unit or a bottoming-cycle unit:

(1) Operating as part of a cogeneration system; and

(2) Producing on an annual average basis—

(i) For a topping-cycle unit,

(A) Useful thermal energy not less than 5 percent of total energy output; and

(B) Useful power that, when added to one-half of useful thermal energy produced, is not less than 42.5 percent of total energy input, if useful thermal energy produced is 15 percent or more of total energy output, or not less than 45 percent of total energy input, if useful thermal energy produced is less than 15 percent of total energy output.

(ii) For a bottoming-cycle unit, useful power not less than 45 percent of total energy input;

(3) Provided that the requirements in paragraph (2) of this definition shall not apply to a calendar year referenced in paragraph (2) of this definition during which the unit did not operate at all;

(4) Provided that the total energy input under paragraphs (2)(i)(B) and (2)(ii) of this definition shall equal the unit's total energy input from all fuel, except biomass if the unit is a boiler; and

(5) Provided that, if, throughout its operation during the 12-month period or a calendar year referenced in paragraph (2) of this definition, a unit is operated as part of a cogeneration system and the cogeneration system meets on a system-wide basis the requirement in paragraph (2)(i)(B) or (2)(ii) of this definition, the unit shall be deemed to meet such requirement during that 12-month period or calendar year.

Combustion turbine means an enclosed device comprising:

(1) If the device is simple cycle, a compressor, a combustor, and a turbine and in which the flue gas resulting from the combustion of fuel in the combustor passes through the turbine, rotating the turbine; and

(2) If the device is combined cycle, the equipment described in paragraph (1) of this definition and any associated duct burner, heat recovery steam generator, and steam turbine.

Commence commercial operation means, with regard to a unit:

(1) To have begun to produce steam, gas, or other heated medium used to generate electricity for sale or use, including test generation, except as provided in § 97.405.

(i) For a unit that is a TR NO_X Annual unit under § 97.404 on the later of January 1, 2005 or the date the unit commences commercial operation as defined in the introductory text of paragraph (1) of this definition and that subsequently undergoes a physical change or is moved to a new location or source, such date shall remain the date of commencement of commercial operation of the unit, which shall continue to be treated as the same unit.

(ii) For a unit that is a TR NO_X Annual unit under § 97.404 on the later of January 1, 2005 or the date the unit commences commercial operation as defined in the introductory text of paragraph (1) of this definition and that is subsequently replaced by a unit at the same or a different source, such date shall remain the replaced unit's date of commencement of commercial operation, and the replacement unit shall be treated as a separate unit with a separate date for commencement of commercial operation as defined in paragraph (1) or (2) of this definition as appropriate.

(2) Notwithstanding paragraph (1) of this definition and except as provided in § 97.405, for a unit that is not a TR NO_X Annual unit under § 97.404 on the later of January 1, 2005 or the date the unit commences commercial operation as defined in introductory text of paragraph (1) of this definition, the unit's date for commencement of commercial operation shall be the date on which the unit becomes a TR NO_X Annual unit under § 97.404.

(i) For a unit with a date for commencement of commercial operation as defined in the introductory text of paragraph (2) of this definition and that subsequently undergoes a physical change or is moved to a different location or source, such date shall remain the date of commencement of commercial operation of the unit, which shall continue to be treated as the same unit.

(ii) For a unit with a date for commencement of commercial operation as defined in the introductory text of paragraph (2) of this definition and that is subsequently replaced by a unit at the same or a different source, such date shall remain the replaced unit's date of commencement of commercial operation, and the replacement unit shall be treated as a separate unit with a separate date for

commencement of commercial operation as defined in paragraph (1) or (2) of this definition as appropriate.

Common designated representative means, with regard to a control period in a given year, a designated representative where, as of April 1 immediately after the allowance transfer deadline for such control period, the same natural person is authorized under §§ 97.413(a) and 97.415(a) as the designated representative for a group of one or more TR NO_X Annual sources and units located in a State (and Indian country within the borders of such State).

Common designated representative's assurance level means, with regard to a specific common designated representative and a State (and Indian country within the borders of such State) and control period in a given year for which the State assurance level is exceeded as described in § 97.406(c)(2)(iii), the common designated representative's share of the State NO_X Annual trading budget with the variability limit for the State for such control period.

Common designated representative's share means, with regard to a specific common designated representative for a control period in a given year:

(1) With regard to a total amount of NO_X emissions from all TR NO_X Annual units in a State (and Indian country within the borders of such State) during such control period, the total tonnage of NO_X emissions during such control period from a group of one or more TR NO_X Annual units located in such State (and such Indian country) and having the common designated representative for such control period;

(2) With regard to a State NO_X Annual trading budget with the variability limit for such control period, the amount (rounded to the nearest allowance) equal to the sum of the total amount of TR NO_X Annual allowances allocated for such control period to a group of one or more TR NO_X Annual units located in the State (and Indian country within the borders of such State) and having the common designated representative for such control period and of the total amount of TR NO_X Annual allowances purchased by an owner or operator of such TR NO_X Annual units in an auction for such control period and submitted by the State or the permitting authority to the Administrator for recordation in the compliance accounts for such TR NO_X Annual units in accordance with the TR NO_X Annual allowance auction provisions in a SIP revision approved by the Administrator under § 52.38(a)(4) or (5) of this chapter, multiplied by the sum of the State NO_X Annual trading budget under § 97.410(a) and the State's variability limit under § 97.410(b) for such control period and divided by such State NO_X Annual trading budget;

(3) Provided that, in the case of a unit that operates during, but has no amount of TR NO_X Annual allowances allocated under §§ 97.411 and 97.412 for, such control period, the unit shall be treated, solely for purposes of this definition, as being allocated an amount (rounded to the nearest allowance) of TR NO_X Annual allowances for such control period equal to the unit's allowable NO_X emission rate applicable to such control period, multiplied by a capacity factor of 0.85 (if the unit is a boiler combusting any amount of coal or coal-derived fuel during such control period), 0.24 (if the unit is a simple combustion turbine during such control period), 0.67 (if the unit is a combined cycle turbine during such control period), 0.74 (if the unit is an integrated coal gasification combined cycle unit during such control period), or 0.36 (for any other unit), multiplied by the unit's maximum hourly load as reported in accordance with this subpart and by 8,760 hours/control period, and divided by 2,000 lb/ton.

Common stack means a single flue through which emissions from 2 or more units are exhausted.

Compliance account means an Allowance Management System account, established by the Administrator for a TR NO_X Annual source under this subpart, in which any TR NO_X Annual allowance allocations to the TR NO_X Annual units at the source are recorded and in which are held any TR NO_X Annual allowances available for use for a control period in a given year in complying with the source's TR NO_X Annual emissions limitation in accordance with §§ 97.406 and 97.424.

Continuous emission monitoring system or *CEMS* means the equipment required under this subpart to sample, analyze, measure, and provide, by means of readings recorded at least once every 15 minutes and using an automated data acquisition and handling system (DAHS), a permanent record of NO_X emissions, stack gas volumetric flow rate, stack gas moisture content, and O_2 or CO_2 concentration (as applicable), in a manner consistent with part 75 of this chapter and §§ 97.430 through 97.435. The following systems are the principal types of continuous emission monitoring systems:

(1) A flow monitoring system, consisting of a stack flow rate monitor and an automated data acquisition and handling system and providing a permanent, continuous record of stack gas volumetric flow rate, in standard cubic feet per hour (scfh);

(2) A NO_X concentration monitoring system, consisting of a NO_X pollutant concentration monitor and an automated data acquisition and handling system and providing a permanent, continuous record of NO_X emissions, in parts per million (ppm);

(3) A NO_X emission rate (or NO_X-diluent) monitoring system, consisting of a NO_X pollutant concentration monitor, a diluent gas (CO_2 or O_2) monitor, and an automated data acquisition and handling system and providing a permanent, continuous record of NO_X concentration, in parts per million (ppm), diluent gas concentration, in percent CO_2 or O_2, and NO_X emission rate, in pounds per million British thermal units (lb/mmBtu);

(4) A moisture monitoring system, as defined in § 75.11(b)(2) of this chapter and providing a permanent, continuous record of the stack gas moisture content, in percent H_2O;

(5) A CO_2 monitoring system, consisting of a CO_2 pollutant concentration monitor (or an O_2 monitor plus suitable mathematical equations from which the CO_2 concentration is derived) and an automated data acquisition and handling system and providing a permanent, continuous record of CO_2 emissions, in percent CO_2; and

(6) An O_2 monitoring system, consisting of an O_2 concentration monitor and an automated data acquisition and handling system and providing a permanent, continuous record of O_2, in percent O_2.

Control period means the period starting January 1 of a calendar year, except as provided in § 97.406(c)(3), and ending on December 31 of the same year, inclusive.

Designated representative means, for a TR NO_X Annual source and each TR NO_X Annual unit at the source, the natural person who is authorized by the owners and operators of the source and all such units at the source, in accordance with this subpart, to represent and legally bind each owner and operator in matters pertaining to the TR NO_X Annual Trading Program. If the TR NO_X Annual source is also subject to the Acid Rain Program, TR NO_X Ozone Season Trading Program, TR SO_2 Group 1 Trading Program, or TR SO_2 Group 2 Trading Program, then this natural person shall be the same natural person as the designated representative, as defined in the respective program.

Emissions means air pollutants exhausted from a unit or source into the atmosphere, as measured, recorded, and

reported to the Administrator by the designated representative, and as modified by the Administrator:

(1) In accordance with this subpart; and

(2) With regard to a period before the unit or source is required to measure, record, and report such air pollutants in accordance with this subpart, in accordance with part 75 of this chapter.

Excess emissions means any ton of emissions from the TR NO_X Annual units at a TR NO_X Annual source during a control period in a given year that exceeds the TR NO_X Annual emissions limitation for the source for such control period.

Fossil fuel means—

(1) Natural gas, petroleum, coal, or any form of solid, liquid, or gaseous fuel derived from such material; or

(2) For purposes of applying the limitation on ''average annual fuel consumption of fossil fuel'' in §§ 97.404(b)(2)(i)(B) and (ii), natural gas, petroleum, coal, or any form of solid, liquid, or gaseous fuel derived from such material for the purpose of creating useful heat.

Fossil-fuel-fired means, with regard to a unit, combusting any amount of fossil fuel in 2005 or any calendar year thereafter.

General account means an Allowance Management System account, established under this subpart, that is not a compliance account or an assurance account.

Generator means a device that produces electricity.

Gross electrical output means, for a unit, electricity made available for use, including any such electricity used in the power production process (which process includes, but is not limited to, any on-site processing or treatment of fuel combusted at the unit and any on-site emission controls).

Heat input means, for a unit for a specified period of time, the product (in mmBtu/time) of the gross calorific value of the fuel (in mmBtu/lb) fed into the unit multiplied by the fuel feed rate (in lb of fuel/time), as measured, recorded, and reported to the Administrator by the designated representative and as modified by the Administrator in accordance with this subpart and excluding the heat derived from preheated combustion air, recirculated flue gases, or exhaust.

Heat input rate means, for a unit, the amount of heat input (in mmBtu) divided by unit operating time (in hr) or, for a unit and a specific fuel, the amount of heat input attributed to the fuel (in mmBtu) divided by the unit operating time (in hr) during which the unit combusts the fuel.

Heat rate means, for a unit, the unit's maximum design heat input (in Btu/hr), divided by the product of 1,000,000 Btu/mmBtu and the unit's maximum hourly load.

Indian country means ''Indian country'' as defined in 18 U.S.C. 1151.

Life-of-the-unit, firm power contractual arrangement means a unit participation power sales agreement under which a utility or industrial customer reserves, or is entitled to receive, a specified amount or percentage of nameplate capacity and associated energy generated by any specified unit and pays its proportional amount of such unit's total costs, pursuant to a contract:

(1) For the life of the unit;

(2) For a cumulative term of no less than 30 years, including contracts that permit an election for early termination; or

(3) For a period no less than 25 years or 70 percent of the economic useful life of the unit determined as of the time the unit is built, with option rights to purchase or release some portion of the nameplate capacity and associated energy generated by the unit at the end of the period.

Maximum design heat input means, for a unit, the maximum amount of fuel per hour (in Btu/hr) that the unit is capable of combusting on a steady state basis as of the initial installation of the unit as specified by the manufacturer of the unit.

Monitoring system means any monitoring system that meets the requirements of this subpart, including a continuous emission monitoring system, an alternative monitoring system, or an excepted monitoring system under part 75 of this chapter.

Nameplate capacity means, starting from the initial installation of a generator, the maximum electrical generating output (in MWe, rounded to the nearest tenth) that the generator is capable of producing on a steady state basis and during continuous operation (when not restricted by seasonal or other deratings) as of such installation as specified by the manufacturer of the generator or, starting from the completion of any subsequent physical change in the generator resulting in an increase in the maximum electrical generating output that the generator is capable of producing on a steady state basis and during continuous operation (when not restricted by seasonal or other deratings), such increased maximum amount (in MWe, rounded to the nearest tenth) as of such completion as specified by the person conducting the physical change.

Natural gas means ''natural gas'' as defined in § 72.2 of this chapter.

Newly affected TR NO_X Annual unit means a unit that was not a TR NO_X Annual unit when it began operating but that thereafter becomes a TR NO_X Annual unit.

Operate or *operation* means, with regard to a unit, to combust fuel.

Operator means, for a TR NO_X Annual source or a TR NO_X Annual unit at a source respectively, any person who operates, controls, or supervises a TR NO_X Annual unit at the source or the TR NO_X Annual unit and shall include, but not be limited to, any holding company, utility system, or plant manager of such source or unit.

Owner means, for a TR NO_X Annual source or a TR NO_X Annual unit at a source respectively, any of the following persons:

(1) Any holder of any portion of the legal or equitable title in a TR NO_X Annual unit at the source or the TR NO_X Annual unit;

(2) Any holder of a leasehold interest in a TR NO_X Annual unit at the source or the TR NO_X Annual unit, provided that, unless expressly provided for in a leasehold agreement, ''owner'' shall not include a passive lessor, or a person who has an equitable interest through such lessor, whose rental payments are not based (either directly or indirectly) on the revenues or income from such TR NO_X Annual unit; and 3) Any purchaser of power from a TR NO_X Annual unit at the source or the TR NO_X Annual unit under a life-of-the-unit, firm power contractual arrangement.

Permanently retired means, with regard to a unit, a unit that is unavailable for service and that the unit's owners and operators do not expect to return to service in the future.

Permitting authority means ''permitting authority'' as defined in §§ 70.2 and 71.2 of this chapter.

Potential electrical output capacity means, for a unit, 33 percent of the unit's maximum design heat input, divided by 3,413 Btu/kWh, divided by 1,000 kWh/MWh, and multiplied by 8,760 hr/yr.

Receive or *receipt of* means, when referring to the Administrator, to come into possession of a document, information, or correspondence (whether sent in hard copy or by authorized electronic transmission), as indicated in an official log, or by a notation made on the document, information, or correspondence, by the Administrator in the regular course of business.

Recordation, record, or *recorded* means, with regard to TR NO_X Annual allowances, the moving of TR NO_X

Annual allowances by the Administrator into, out of, or between Allowance Management System accounts, for purposes of allocation, auction, transfer, or deduction.

Reference method means any direct test method of sampling and analyzing for an air pollutant as specified in § 75.22 of this chapter.

Replacement, replace, or *replaced* means, with regard to a unit, the demolishing of a unit, or the permanent retirement and permanent disabling of a unit, and the construction of another unit (the replacement unit) to be used instead of the demolished or retired unit (the replaced unit).

Sequential use of energy means:

(1) The use of reject heat from electricity production in a useful thermal energy application or process; or

(2) The use of reject heat from useful thermal energy application or process in electricity production.

Serial number means, for a TR NO_X Annual allowance, the unique identification number assigned to each TR NO_X Annual allowance by the Administrator.

Solid waste incineration unit means a stationary, fossil-fuel-fired boiler or stationary, fossil-fuel-fired combustion turbine that is a ''solid waste incineration unit'' as defined in section 129(g)(1) of the Clean Air Act.

Source means all buildings, structures, or installations located in one or more contiguous or adjacent properties under common control of the same person or persons. This definition does not change or otherwise affect the definition of ''major source'', ''stationary source'', or ''source'' as set forth and implemented in a title V operating permit program or any other program under the Clean Air Act.

State means one of the States that is subject to the TR NO_X Annual Trading Program pursuant to § 52.38(a) of this chapter.

Submit or *serve* means to send or transmit a document, information, or correspondence to the person specified in accordance with the applicable regulation:

(1) In person;

(2) By United States Postal Service; or

(3) By other means of dispatch or transmission and delivery;

(4) Provided that compliance with any ''submission'' or ''service'' deadline shall be determined by the date of dispatch, transmission, or mailing and not the date of receipt.

Topping-cycle unit means a unit in which the energy input to the unit is first used to produce useful power, including electricity, where at least some of the reject heat from the electricity production is then used to provide useful thermal energy.

Total energy input means, for a unit, total energy of all forms supplied to the unit, excluding energy produced by the unit. Each form of energy supplied shall be measured by the lower heating value of that form of energy calculated as follows:

$$LHV = HHV - 10.55(W + 9H)$$

Where:

LHV = lower heating value of the form of energy in Btu/lb,

HHV = higher heating value of the form of energy in Btu/lb,

W = weight % of moisture in the form of energy, and

H = weight % of hydrogen in the form of energy.

Total energy output means, for a unit, the sum of useful power and useful thermal energy produced by the unit.

TR NO_X Annual allowance means a limited authorization issued and allocated or auctioned by the Administrator under this subpart, or by a State or permitting authority under a SIP revision approved by the Administrator under § 52.38(a)(3), (4), or (5) of this chapter, to emit one ton of NO_X during a control period of the specified calendar year for which the authorization is allocated or auctioned or of any calendar year thereafter under the TR NO_X Annual Trading Program.

TR NO_X Annual allowance deduction or *deduct TR NO_X Annual allowances* means the permanent withdrawal of TR NO_X Annual allowances by the Administrator from a compliance account (*e.g.*, in order to account for compliance with the TR NO_X Annual emissions limitation) or from an assurance account (*e.g.*, in order to account for compliance with the assurance provisions under §§ 97.406 and 97.425).

TR NO_X Annual allowances held or *hold TR NO_4 Annual allowances* means the TR NO_X Annual allowances treated as included in an Allowance Management System account as of a specified point in time because at that time they:

(1) Have been recorded by the Administrator in the account or transferred into the account by a correctly submitted, but not yet recorded, TR NO_X Annual allowance transfer in accordance with this subpart; and

(2) Have not been transferred out of the account by a correctly submitted, but not yet recorded, TR NO_X Annual allowance transfer in accordance with this subpart.

TR NO_X Annual emissions limitation means, for a TR NO_X Annual source, the tonnage of NO_X emissions authorized in a control period in a given year by the TR NO_X Annual allowances available for deduction for the source under § 97.424(a) for such control period.

TR NO_X Annual source means a source that includes one or more TR NO_X Annual units.

TR NO_X Annual Trading Program means a multi-state NO_X air pollution control and emission reduction program established in accordance with this subpart and § 52.38(a) of this chapter (including such a program that is revised in a SIP revision approved by the Administrator under § 52.38(a)(3) or (4) of this chapter or that is established in a SIP revision approved by the Administrator under § 52.38(a)(5) of this chapter), as a means of mitigating interstate transport of fine particulates and NO_X.

TR NO_X Annual unit means a unit that is subject to the TR NO_X Annual Trading Program.

TR NO_X Ozone Season Trading Program means a multi-state NO_X air pollution control and emission reduction program established in accordance with subpart BBBBB of this part and § 52.38(b) of this chapter (including such a program that is revised in a SIP revision approved by the Administrator under § 52.38(b)(3) or (4) of this chapter or that is established in a SIP revision approved by the Administrator under § 52.38(b)(5) of this chapter), as a means of mitigating interstate transport of ozone and NO_X.

TR SO_2 Group 1 Trading Program means a multi-state SO_2 air pollution control and emission reduction program established in accordance with subpart CCCCC of this part and § 52.39(a), (b), (d) through (f), (j), and (k) of this chapter (including such a program that is revised in a SIP revision approved by the Administrator under § 52.39(d) or (e) of this chapter or that is established in a SIP revision approved by the Administrator under § 52.39(f) of this chapter), as a means of mitigating interstate transport of fine particulates and SO_2.

TR SO_2 Group 2 Trading Program means a multi-state SO_2 air pollution control and emission reduction program established in accordance with subpart DDDDD of this part and 52.39(a), (c), and (g) through (k) of this chapter (including such a program that is revised in a SIP revision approved by the Administrator under § 52.39(g) or (h) of this chapter or that is established in a SIP revision approved by the Administrator under § 52.39(i) of this chapter), as a means of mitigating interstate transport of fine particulates and SO_2.

Unit means a stationary, fossil-fuel-fired boiler, stationary, fossil-fuel-fired combustion turbine, or other stationary, fossil-fuel-fired combustion device. A unit that undergoes a physical change or is moved to a different location or source shall continue to be treated as the same unit. A unit (the replaced unit) that is replaced by another unit (the replacement unit) at the same or a different source shall continue to be treated as the same unit, and the replacement unit shall be treated as a separate unit.

Unit operating day means, with regard to a unit, a calendar day in which the unit combusts any fuel.

Unit operating hour or hour of unit operation means, with regard to a unit, an hour in which the unit combusts any fuel.

Useful power means, with regard to a unit, electricity or mechanical energy that the unit makes available for use, excluding any such energy used in the power production process (which process includes, but is not limited to, any on-site processing or treatment of fuel combusted at the unit and any on-site emission controls).

Useful thermal energy means thermal energy that is:

(1) Made available to an industrial or commercial process (not a power production process), excluding any heat contained in condensate return or makeup water;

(2) Used in a heating application (*e.g.,* space heating or domestic hot water heating); or

(3) Used in a space cooling application (*i.e.,* in an absorption chiller).

Utility power distribution system means the portion of an electricity grid owned or operated by a utility and dedicated to delivering electricity to customers.

§ 97.403 Measurements, abbreviations, and acronyms.

Measurements, abbreviations, and acronyms used in this subpart are defined as follows:

Btu—British thermal unit
CO_2—carbon dioxide
H_2O—water
hr—hour
kW—kilowatt electrical
kWh—kilowatt hour
lb—pound
mmBtu—million Btu
MWe—megawatt electrical
MWh—megawatt hour
NO_X—nitrogen oxides
O_2—oxygen
ppm—parts per million
scfh—standard cubic feet per hour
SO_2—sulfur dioxide
yr—year

§ 97.404 Applicability.

(a) Except as provided in paragraph (b) of this section:

(1) The following units in a State (and Indian country within the borders of such State) shall be TR NO_X Annual units, and any source that includes one or more such units shall be a TR NO_X Annual source, subject to the requirements of this subpart: any stationary, fossil-fuel-fired boiler or stationary, fossil-fuel-fired combustion turbine serving at any time, on or after January 1, 2005, a generator with nameplate capacity of more than 25 MWe producing electricity for sale.

(2) If a stationary boiler or stationary combustion turbine that, under paragraph (a)(1) of this section, is not a TR NO_X Annual unit begins to combust fossil fuel or to serve a generator with nameplate capacity of more than 25 MWe producing electricity for sale, the unit shall become a TR NO_X Annual unit as provided in paragraph (a)(1) of this section on the first date on which it both combusts fossil fuel and serves such generator.

(b) Any unit in a State (and Indian country within the borders of such State) that otherwise is a TR NO_X Annual unit under paragraph (a) of this section and that meets the requirements set forth in paragraph (b)(1)(i) or (2)(i) of this section shall not be a TR NO_X Annual unit:

(1)(i) Any unit:

(A) Qualifying as a cogeneration unit throughout the later of 2005 or the 12-month period starting on the date the unit first produces electricity and continuing to qualify as a cogeneration unit throughout each calendar year ending after the later of 2005 or such 12-month period; and

(B) Not supplying in 2005 or any calendar year thereafter more than one-third of the unit's potential electric output capacity or 219,000 MWh, whichever is greater, to any utility power distribution system for sale.

(ii) If, after qualifying under paragraph (b)(1)(i) of this section as not being a TR NO_X Annual unit, a unit subsequently no longer meets all the requirements of paragraph (b)(1)(i) of this section, the unit shall become a TR NO_X Annual unit starting on the earlier of January 1 after the first calendar year during which the unit first no longer qualifies as a cogeneration unit or January 1 after the first calendar year during which the unit no longer meets the requirements of paragraph (b)(1)(i)(B) of this section. The unit shall thereafter continue to be a TR NO_X Annual unit.

(2)(i) Any unit:

(A) Qualifying as a solid waste incineration unit throughout the later of 2005 or the 12-month period starting on the date the unit first produces electricity and continuing to qualify as a solid waste incineration unit throughout each calendar year ending after the later of 2005 or such 12-month period; and

(B) With an average annual fuel consumption of fossil fuel for the first 3 consecutive calendar years of operation starting no earlier than 2005 of less than 20 percent (on a Btu basis) and an average annual fuel consumption of fossil fuel for any 3 consecutive calendar years thereafter of less than 20 percent (on a Btu basis).

(ii) If, after qualifying under paragraph (b)(2)(i) of this section as not being a TR NO_X Annual unit, a unit subsequently no longer meets all the requirements of paragraph (b)(1)(i) of this section, the unit shall become a TR NO_X Annual unit starting on the earlier of January 1 after the first calendar year during which the unit first no longer qualifies as a solid waste incineration unit or January 1 after the first 3 consecutive calendar years after 2005 for which the unit has an average annual fuel consumption of fossil fuel of 20 percent or more. The unit shall thereafter continue to be a TR NO_X Annual unit.

(c) A certifying official of an owner or operator of any unit or other equipment may submit a petition (including any supporting documents) to the Administrator at any time for a determination concerning the applicability, under paragraphs (a) and (b) of this section or a SIP revision approved under § 52.38(a)(4) or (5) of this chapter, of the TR NO_X Annual Trading Program to the unit or other equipment.

(1) Petition content. The petition shall be in writing and include the identification of the unit or other equipment and the relevant facts about the unit or other equipment. The petition and any other documents provided to the Administrator in connection with the petition shall include the following certification statement, signed by the certifying official: ''I am authorized to make this submission on behalf of the owners and operators of the unit or other equipment for which the submission is made. I certify under penalty of law that I have personally examined, and am familiar with, the statements and information submitted in this document and all its attachments. Based on my inquiry of those individuals with primary responsibility for obtaining the information, I certify that the statements

and information are to the best of my knowledge and belief true, accurate, and complete. I am aware that there are significant penalties for submitting false statements and information or omitting required statements and information, including the possibility of fine or imprisonment.''

(2) Response. The Administrator will issue a written response to the petition and may request supplemental information determined by the Administrator to be relevant to such petition. The Administrator's determination concerning the applicability, under paragraphs (a) and (b) of this section, of the TR NO_X Annual Trading Program to the unit or other equipment shall be binding on any State or permitting authority unless the Administrator determines that the petition or other documents or information provided in connection with the petition contained significant, relevant errors or omissions.

§ 97.405 Retired unit exemption.

(a)(1) Any TR NO_X Annual unit that is permanently retired shall be exempt from § 97.406(b) and (c)(1), § 97.424, and §§ 97.430 through 97.435.

(2) The exemption under paragraph (a)(1) of this section shall become effective the day on which the TR NO_X Annual unit is permanently retired. Within 30 days of the unit's permanent retirement, the designated representative shall submit a statement to the Administrator. The statement shall state, in a format prescribed by the Administrator, that the unit was permanently retired on a specified date and will comply with the requirements of paragraph (b) of this section.

(b) Special provisions. (1) A unit exempt under paragraph (a) of this section shall not emit any NO_X, starting on the date that the exemption takes effect.

(2) For a period of 5 years from the date the records are created, the owners and operators of a unit exempt under paragraph (a) of this section shall retain, at the source that includes the unit, records demonstrating that the unit is permanently retired. The 5-year period for keeping records may be extended for cause, at any time before the end of the period, in writing by the Administrator. The owners and operators bear the burden of proof that the unit is permanently retired.

(3) The owners and operators and, to the extent applicable, the designated representative of a unit exempt under paragraph (a) of this section shall comply with the requirements of the TR NO_X Annual Trading Program concerning all periods for which the exemption is not in effect, even if such requirements arise, or must be complied with, after the exemption takes effect.

(4) A unit exempt under paragraph (a) of this section shall lose its exemption on the first date on which the unit resumes operation. Such unit shall be treated, for purposes of applying allocation, monitoring, reporting, and recordkeeping requirements under this subpart, as a unit that commences commercial operation on the first date on which the unit resumes operation.

§ 97.406 Standard requirements.

(a) *Designated representative requirements.* The owners and operators shall comply with the requirement to have a designated representative, and may have an alternate designated representative, in accordance with §§ 97.413 through 97.418.

(b) *Emissions monitoring, reporting, and recordkeeping requirements.*

(1) The owners and operators, and the designated representative, of each TR NO_X Annual source and each TR NO_X Annual unit at the source shall comply with the monitoring, reporting, and recordkeeping requirements of §§ 97.430 through 97.435.

(2) The emissions data determined in accordance with §§ 97.430 through 97.435 shall be used to calculate allocations of TR NO_X Annual allowances under §§ 97.411(a)(2) and (b) and 97.412 and to determine compliance with the TR NO_X Annual emissions limitation and assurance provisions under paragraph (c) of this section, provided that, for each monitoring location from which mass emissions are reported, the mass emissions amount used in calculating such allocations and determining such compliance shall be the mass emissions amount for the monitoring location determined in accordance with §§ 97.430 through 97.435 and rounded to the nearest ton, with any fraction of a ton less than 0.50 being deemed to be zero.

(c) *NO_X emissions requirements.* (1) TR NO_X Annual emissions limitation. (i) As of the allowance transfer deadline for a control period in a given year, the owners and operators of each TR NO_X Annual source and each TR NO_X Annual unit at the source shall hold, in the source's compliance account, TR NO_X Annual allowances available for deduction for such control period under § 97.424(a) in an amount not less than the tons of total NO_X emissions for such control period from all TR NO_X Annual units at the source.

(ii) If total NO_X emissions during a control period in a given year from the TR NO_X Annual units at a TR NO_X Annual source are in excess of the TR NO_X Annual emissions limitation set forth in paragraph (c)(1)(i) of this section, then:

(A) The owners and operators of the source and each TR NO_X Annual unit at the source shall hold the TR NO_X Annual allowances required for deduction under § 97.424(d); and

(B) The owners and operators of the source and each TR NO_X Annual unit at the source shall pay any fine, penalty, or assessment or comply with any other remedy imposed, for the same violations, under the Clean Air Act, and each ton of such excess emissions and each day of such control period shall constitute a separate violation of this subpart and the Clean Air Act.

(2) TR NO_X Annual assurance provisions. (i) If total NO_X emissions during a control period in a given year from all TR NO_X Annual units at TR NO_X Annual sources in a State (and Indian country within the borders of such State) exceed the State assurance level, then the owners and operators of such sources and units in each group of one or more sources and units having a common designated representative for such control period, where the common designated representative's share of such NO_X emissions during such control period exceeds the common designated representative's assurance level for the State and such control period, shall hold (in the assurance account established for the owners and operators of such group) TR NO_X Annual allowances available for deduction for such control period under § 97.425(a) in an amount equal to two times the product (rounded to the nearest whole number), as determined by the Administrator in accordance with § 97.425(b), of multiplying—

(A) The quotient of the amount by which the common designated representative's share of such NO_X emissions exceeds the common designated representative's assurance level divided by the sum of the amounts, determined for all common designated representatives for such sources and units in the State (and Indian country within the borders of such State) for such control period, by which each common designated representative's share of such NO_X emissions exceeds the respective common designated representative's assurance level; and

(B) The amount by which total NO_X emissions from all TR NO_X Annual units at TR NO_X Annual sources in the State (and Indian country within the borders of such State) for such control period exceed the State assurance level.

(ii) The owners and operators shall hold the TR NO_X Annual allowances required under paragraph (c)(2)(i) of this section, as of midnight of November 1 (if it is a business day), or midnight of the first business day thereafter (if November 1 is not a business day), immediately after such control period.

(iii) Total NO_X emissions from all TR NO_X Annual units at TR NO_X Annual sources in a State (and Indian country within the borders of such State) during a control period in a given year exceed the State assurance level if such total NO_X emissions exceed the sum, for such control period, of the State NO_X Annual trading budget under § 97.410(a) and the State's variability limit under § 97.410(b).

(iv) It shall not be a violation of this subpart or of the Clean Air Act if total NO_X emissions from all TR NO_X Annual units at TR NO_X Annual sources in a State (and Indian country within the borders of such State) during a control period exceed the State assurance level or if a common designated representative's share of total NO_X emissions from the TR NO_X Annual units at TR NO_X Annual sources in a State (and Indian country within the borders of such State) during a control period exceeds the common designated representative's assurance level.

(v) To the extent the owners and operators fail to hold TR NO_X Annual allowances for a control period in a given year in accordance with paragraphs (c)(2)(i) through (iii) of this section,

(A) The owners and operators shall pay any fine, penalty, or assessment or comply with any other remedy imposed under the Clean Air Act; and

(B) Each TR NO_X Annual allowance that the owners and operators fail to hold for such control period in accordance with paragraphs (c)(2)(i) through (iii) of this section and each day of such control period shall constitute a separate violation of this subpart and the Clean Air Act.

(3) Compliance periods. A TR NO_X Annual unit shall be subject to the requirements under paragraphs (c)(1) and (c)(2) of this section for the control period starting on the later of January 1, 2012 or the deadline for meeting the unit's monitor certification requirements under § 97.430(b) and for each control period thereafter.

(4) Vintage of allowances held for compliance. (i) A TR NO_X Annual allowance held for compliance with the requirements under paragraph (c)(1)(i) of this section for a control period in a given year must be a TR NO_X Annual allowance that was allocated for such control period or a control period in a prior year.

(ii) A TR NO_X Annual allowance held for compliance with the requirements under paragraphs (c)(1)(ii)(A) and (2)(i) through (iii) of this section for a control period in a given year must be a TR NO_X Annual allowance that was allocated for a control period in a prior year or the control period in the given year or in the immediately following year.

(5) Allowance Management System requirements. Each TR NO_X Annual allowance shall be held in, deducted from, or transferred into, out of, or between Allowance Management System accounts in accordance with this subpart.

(6) Limited authorization. A TR NO_X Annual allowance is a limited authorization to emit one ton of NO_X during the control period in one year. Such authorization is limited in its use and duration as follows:

(i) Such authorization shall only be used in accordance with the TR NO_X Annual Trading Program; and

(ii) Notwithstanding any other provision of this subpart, the Administrator has the authority to terminate or limit the use and duration of such authorization to the extent the Administrator determines is necessary or appropriate to implement any provision of the Clean Air Act.

(7) Property right. A TR NO_X Annual allowance does not constitute a property right.

(d) *Title V permit requirements.* (1) No title V permit revision shall be required for any allocation, holding, deduction, or transfer of TR NO_X Annual allowances in accordance with this subpart.

(2) A description of whether a unit is required to monitor and report NO_X emissions using a continuous emission monitoring system (under subpart H of part 75 of this chapter), an excepted monitoring system (under appendices D and E to part 75 of this chapter), a low mass emissions excepted monitoring methodology (under § 75.19 of this chapter), or an alternative monitoring system (under subpart E of part 75 of this chapter) in accordance with §§ 97.430 through 97.435 may be added to, or changed in, a title V permit using minor permit modification procedures in accordance with §§ 70.7(e)(2) and 71.7(e)(1) of this chapter, provided that the requirements applicable to the described monitoring and reporting (as added or changed, respectively) are already incorporated in such permit. This paragraph explicitly provides that the addition of, or change to, a unit's description as described in the prior sentence is eligible for minor permit modification procedures in accordance with §§ 70.7(e)(2)(i)(B) and 71.7(e)(1)(i)(B) of this chapter.

(e) *Additional recordkeeping and reporting requirements.* (1) Unless otherwise provided, the owners and operators of each TR NO_X Annual source and each TR NO_X Annual unit at the source shall keep on site at the source each of the following documents (in hardcopy or electronic format) for a period of 5 years from the date the document is created. This period may be extended for cause, at any time before the end of 5 years, in writing by the Administrator.

(i) The certificate of representation under § 97.416 for the designated representative for the source and each TR NO_X Annual unit at the source and all documents that demonstrate the truth of the statements in the certificate of representation; provided that the certificate and documents shall be retained on site at the source beyond such 5-year period until such certificate of representation and documents are superseded because of the submission of a new certificate of representation under § 97.416 changing the designated representative.

(ii) All emissions monitoring information, in accordance with this subpart.

(iii) Copies of all reports, compliance certifications, and other submissions and all records made or required under, or to demonstrate compliance with the requirements of, the TR NO_X Annual Trading Program.

(2) The designated representative of a TR NO_X Annual source and each TR NO_X Annual unit at the source shall make all submissions required under the TR NO_X Annual Trading Program, except as provided in § 97.418. This requirement does not change, create an exemption from, or or otherwise affect the responsible official submission requirements under a title V operating permit program in parts 70 and 71 of this chapter.

(f) *Liability.* (1) Any provision of the TR NO_X Annual Trading Program that applies to a TR NO_X Annual source or the designated representative of a TR NO_X Annual source shall also apply to the owners and operators of such source and of the TR NO_X Annual units at the source.

(2) Any provision of the TR NO_X Annual Trading Program that applies to a TR NO_X Annual unit or the designated representative of a TR NO_X Annual unit shall also apply to the owners and operators of such unit.

(g) *Effect on other authorities.* No provision of the TR NO_X Annual Trading Program or exemption under

§ 97.405 shall be construed as exempting or excluding the owners and operators, and the designated representative, of a TR NO_X Annual source or TR NO_X Annual unit from compliance with any other provision of the applicable, approved State implementation plan, a federally enforceable permit, or the Clean Air Act.

§ 97.407 Computation of time.

(a) Unless otherwise stated, any time period scheduled, under the TR NO_X Annual Trading Program, to begin on the occurrence of an act or event shall begin on the day the act or event occurs.

(b) Unless otherwise stated, any time period scheduled, under the TR NO_X Annual Trading Program, to begin before the occurrence of an act or event shall be computed so that the period ends the day before the act or event occurs.

(c) Unless otherwise stated, if the final day of any time period, under the TR NO_X Annual Trading Program, is not a business day, the time period shall be extended to the next business day.

§ 97.408 Administrative appeal procedures.

The administrative appeal procedures for decisions of the Administrator under the TR NO_X Annual Trading Program are set forth in part 78 of this chapter.

§ 97.409 [Reserved]

§ 97.410 State NO_X Annual trading budgets, new unit set-asides, Indian country new unit set-aside, and variability limits.

(a) The State NO_X Annual trading budgets, new unit set-asides, and Indian country new unit set-asides for allocations of TR NO_X Annual allowances for the control periods in 2012 and thereafter are as follows:

State	NO_X Annual trading budget (tons)* for 2012 and 2013	New unit set-aside (tons) for 2012 and 2013	Indian country new unit set-aside (tons) for 2012 and 2013
Alabama	72,691	1,454	.....
Georgia	62,010	1,240	.....
Illinois	47,872	3,830	.....
Indiana	109,726	3,292	.....
Iowa	38,335	729	38
Kansas	30,714	583	31
Kentucky	85,086	3,403	.....
Maryland	16,633	333	.....
Michigan	60,193	1,144	60
Minnesota	29,572	561	30
Missouri	52,374	1,571	.....
Nebraska	26,440	1,825	26
New Jersey	7,266	145	.....
New York	17,543	508	18
North Carolina	50,587	2,984	51
Ohio	92,703	1,854	.....
Pennsylvania	119,986	2,400	.....
South Carolina	32,498	617	33
Tennessee	35,703	714	.....
Texas	133,595	3,874	134
Virginia	33,242	1,662	.....
West Virginia	59,472	2,974	.....
Wisconsin	31,628	1,866	32

State	NO_X Annual trading budget (tons)* for 2014 and thereafter	New unit set-aside (tons) for 2014 and thereafter	Indian country new unit set-aside (tons) for 2014 and thereafter
Alabama	71,962	1,439	.....
Georgia	40,540	811	.....
Illinois	47,872	3,830	.....
Indiana	108,424	3,253	.....
Iowa	37,498	712	38
Kansas	25,560	485	26
Kentucky	77,238	3,090	.....
Maryland	16,574	331	.....
Michigan	57,812	1,098	58
Minnesota	29,572	561	30
Missouri	48,717	1,462	.....
Nebraska	26,440	1,825	26
New Jersey	7,266	145	.....
New York	17,543	508	18
North Carolina	41,553	2,451	42
Ohio	87,493	1,750	.....
Pennsylvania	119,194	2,384	.....
South Carolina	32,498	617	33
Tennessee	19,337	387	.....

State	NO_X Annual trading budget (tons)* for 2014 and thereafter	New unit set-aside (tons) for 2014 and thereafter	Indian country new unit set-aside (tons) for 2014 and thereafter
Texas	133,595	3,874	134
Virginia	33,242	1,662	.....
West Virginia	54,582	2,729	.....
Wisconsin	30,398	1,794	30

* Each trading budget includes the new unit set-aside and, where applicable, the Indian country new unit set-aside and does not include the variability limit.

(b) The States' variability limits for the State NO_X Annual trading budgets for the control periods in 2012 and thereafter are as follows:

State	Variability limits for 2012 and 2013	Variability limits for 2014 and thereafter
Alabama	13,084	12,953
Georgia	11,162	7,297
Illinois	8,617	8,617
Indiana	19,751	19,516
Iowa	6,900	6,750
Kansas	5,529	4,601
Kentucky	15,315	13,903
Maryland	2,994	2,983
Michigan	10,835	10,406
Minnesota	5,323	5,323
Missouri	9,427	8,769
Nebraska	4,759	4,759
New Jersey	1,308	1,308
New York	3,158	3,158
North Carolina	9,106	7,480
Ohio	16,687	15,749
Pennsylvania	21,597	21,455
South Carolina	5,850	5,850
Tennessee	6,427	3,481
Texas	24,047	24,047
Virginia	5,984	5,984
West Virginia	10,705	9,825
Wisconsin	5,693	5,472

§ 97.411 Timing requirements for TR NO_X Annual allowance allocations.

(a) *Existing units.* (1) TR NO_X Annual allowances are allocated, for the control periods in 2012 and each year thereafter, as provided in a notice of data availability issued by the Administrator. Providing an allocation to a unit in such notice does not constitute a determination that the unit is a TR NO_X Annual unit, and not providing an allocation to a unit in such notice does not constitute a determination that the unit is not a TR NO_X Annual unit.

(2) Notwithstanding paragraph (a)(1) of this section, if a unit provided an allocation in the notice of data availability issued under paragraph (a)(1) of this section does not operate, starting after 2011, during the control period in two consecutive years, such unit will not be allocated the TR NO_X Annual allowances provided in such notice for the unit for the control periods in the fifth year after the first such year and in each year after that fifth year. All TR NO_X Annual allowances that would otherwise have been allocated to such unit will be allocated to the new unit set-aside for the State where such unit is located and for the respective years involved. If such unit resumes operation, the Administrator will allocate TR NO_X Annual allowances to the unit in accordance with paragraph (b) of this section.

(b) *New units.* (1) New unit set-asides. (i) By June 1, 2012 and June 1 of each year thereafter, the Administrator will calculate the TR NO_X Annual allowance allocation to each TR NO_X Annual unit in a State, in accordance with § 97.412(a)(2) through (7) and (12), for the control period in the year of the applicable calculation deadline under this paragraph and will promulgate a notice of data availability of the results of the calculations.

(ii) For each notice of data availability required in paragraph (b)(1)(i) of this section, the Administrator will provide an opportunity for submission of objections to the calculations referenced in such notice.

(A) Objections shall be submitted by the deadline specified in each notice of data availability required in paragraph (b)(1)(i) of this section and shall be limited to addressing whether the calculations (including the identification of the TR NO_X Annual units) are in accordance with § 97.412(a)(2) through (7) and (12) and §§ 97.406(b)(2) and 97.430 through 97.435.

(B) The Administrator will adjust the calculations to the extent necessary to ensure that they are in accordance with the provisions referenced in paragraph (b)(1)(ii)(A) of this section. By August 1 immediately after the promulgation of each notice of data availability required in paragraph (b)(1)(i) of this section, the

Administrator will promulgate a notice of data availability of any adjustments that the Administrator determines to be necessary with regard to allocations under § 97.412(a)(2) through (7) and (12) and the reasons for accepting or rejecting any objections submitted in accordance with paragraph (b)(1)(ii)(A) of this section.

(iii) If the new unit set-aside for such control period contains any TR NO_X Annual allowances that have not been allocated in the applicable notice of data availability required in paragraph (b)(1)(ii) of this section, the Administrator will promulgate, by December 15 immediately after such notice, a notice of data availability that identifies any TR NO_X Annual units that commenced commercial operation during the period starting January 1 of the year before the year of such control period and ending November 30 of year of such control period.

(iv) For each notice of data availability required in paragraph (b)(1)(iii) of this section, the Administrator will provide an opportunity for submission of objections to the identification of TR NO_X annual units in such notice.

(A) Objections shall be submitted by the deadline specified in each notice of data availability required in paragraph (b)(1)(iii) of this section and shall be limited to addressing whether the identification of TR NO_X annual units in such notice is in accordance with paragraph (b)(1)(iii) of this section.

(B) The Administrator will adjust the identification of TR NO_X Annual units in the each notice of data availability required in paragraph (b)(1)(iii) of this section to the extent necessary to ensure that it is in accordance with paragraph (b)(1)(iii) of this section and will calculate the TR NO_X Annual allowance allocation to each TR NO_X Annual unit in accordance with § 97.412(a)(9), (10), and (12) and §§ 97.406(b)(2) and 97.430 through 97.435. By February 15 immediately after the promulgation of each notice of data availability required in paragraph (b)(1)(iii) of this section, the Administrator will promulgate a notice of data availability of any adjustments of the identification of TR NO_X Annual units that the Administrator determines to be necessary, the reasons for accepting or rejecting any objections submitted in accordance with paragraph (b)(1)(iv)(A) of this section, and the results of such calculations.

(v) To the extent any TR NO_X Annual allowances are added to the new unit set-aside after promulgation of each notice of data availability required in paragraph (b)(1)(iv) of this section, the Administrator will promulgate additional notices of data availability, as deemed appropriate, of the allocation of such TR NO_X Annual allowances in accordance with § 97.412(a)(10).

(2) Indian country new unit set-asides. (i) By June 1, 2012 and June 1 of each year thereafter, the Administrator will calculate the TR NO_X Annual allowance allocation to each TR NO_X Annual unit in Indian country within the borders of a State, in accordance with § 97.412(b)(2) through (7) and (12), for the control period in the year of the applicable calculation deadline under this paragraph and will promulgate a notice of data availability of the results of the calculations.

(ii) For each notice of data availability required in paragraph (b)(2)(i) of this section, the Administrator will provide an opportunity for submission of objections to the calculations referenced in such notice.

(A) Objections shall be submitted by the deadline specified in each notice of data availability required in paragraph (b)(2)(i) of this section and shall be limited to addressing whether the calculations (including the identification of the TR NO_X Annual units) are in accordance with § 97.412(b)(2) through (7) and (12) and §§ 97.406(b)(2) and 97.430 through 97.435.

(B) The Administrator will adjust the calculations to the extent necessary to ensure that they are in accordance with the provisions referenced in paragraph (b)(2)(ii)(A) of this section. By August 1 immediately after the promulgation of each notice of data availability required in paragraph (b)(2)(i) of this section, the Administrator will promulgate a notice of data availability of any adjustments that the Administrator determines to be necessary with regard to allocations under § 97.412(b)(2) through (7) and (12) and the reasons for accepting or rejecting any objections submitted in accordance with paragraph (b)(2)(ii)(A) of this section.

(iii) If the Indian country new unit set-aside for such control period contains any TR NO_X Annual allowances that have not been allocated in the applicable notice of data availability required in paragraph (b)(2)(ii) of this section, the Administrator will promulgate, by December 15 immediately after such notice, a notice of data availability that identifies any TR NO_X Annual units that commenced commercial operation during the period starting January 1 of the year before the year of such control period and ending November 30 of year of such control period.

(iv) For each notice of data availability required in paragraph (b)(2)(iii) of this section, the Administrator will provide an opportunity for submission of objections to the identification of TR NO_X annual units in such notice.

(A) Objections shall be submitted by the deadline specified in each notice of data availability required in paragraph (b)(2)(iii) of this section and shall be limited to addressing whether the identification of TR NO_X annual units in such notice is in accordance with paragraph (b)(2)(iii) of this section.

(B) The Administrator will adjust the identification of TR NO_X Annual units in the each notice of data availability required in paragraph (b)(2)(iii) of this section to the extent necessary to ensure that it is in accordance with paragraph (b)(2)(iii) of this section and will calculate the TR NO_X Annual allowance allocation to each TR NO_X Annual unit in accordance with § 97.412(b)(9), (10), and (12) and §§ 97.406(b)(2) and 97.430 through 97.435. By February 15 immediately after the promulgation of each notice of data availability required in paragraph (b)(2)(iii) of this section, the Administrator will promulgate a notice of data availability of any adjustments of the identification of TR NO_X Annual units that the Administrator determines to be necessary, the reasons for accepting or rejecting any objections submitted in accordance with paragraph (b)(2)(iv)(A) of this section, and the results of such calculations.

(v) To the extent any TR NO_X Annual allowances are added to the Indian country new unit set-aside after promulgation of each notice of data availability required in paragraph (b)(2)(iv) of this section, the Administrator will promulgate additional notices of data availability, as deemed appropriate, of the allocation of such TR NO_X Annual allowances in accordance with § 97.412(b)(10).

(c) *Units incorrectly allocated* TR NO_X *Annual allowances.* (1) For each control period in 2012 and thereafter, if the Administrator determines that TR NO_X Annual allowances were allocated under paragraph (a) of this section, or under a provision of a SIP revision approved under § 52.38(a)(3), (4), or (5) of this chapter, where such control period and the recipient are covered by the provisions of paragraph (c)(1)(i) of this section or were allocated under § 97.412(a)(2) through (7), (9), and (12) and (b)(2) through (7), (9), and (12), or under a provision of a SIP revision approved under § 52.38(a)(4) or (5) of this chapter, where such control period and the recipient are covered by the

provisions of paragraph (c)(1)(ii) of this section, then the Administrator will notify the designated representative of the recipient and will act in accordance with the procedures set forth in paragraphs (c)(2) through (5) of this section:

(i)(A) The recipient is not actually a TR NO_X Annual unit under § 97.404 as of January 1, 2012 and is allocated TR NO_X Annual allowances for such control period or, in the case of an allocation under a provision of a SIP revision approved under § 52.38(a)(3), (4), or (5) of this chapter, the recipient is not actually a TR NO_X Annual unit as of January 1, 2012 and is allocated TR NO_X Annual allowances for such control period that the SIP revision provides should be allocated only to recipients that are TR NO_X Annual units as of January 1, 2012; or

(B) The recipient is not located as of January 1 of the control period in the State from whose NO_X Annual trading budget the TR NO_X Annual allowances allocated under paragraph (a) of this section, or under a provision of a SIP revision approved under § 52.38(a)(3), (4), or (5) of this chapter, were allocated for such control period.

(ii) The recipient is not actually a TR NO_X Annual unit under § 97.404 as of January 1 of such control period and is allocated TR NO_X Annual allowances for such control period or, in the case of an allocation under a provision of a SIP revision approved under § 52.38(a)(3), (4), or (5) of this chapter, the recipient is not actually a TR NO_X Annual unit as of January 1 of such control period and is allocated TR NO_X Annual allowances for such control period that the SIP revision provides should be allocated only to recipients that are TR NO_X Annual units as of January 1 of such control period.

(2) Except as provided in paragraph (c)(3) or (4) of this section, the Administrator will not record such TR NO_X Annual allowances under § 97.421.

(3) If the Administrator already recorded such TR NO_X Annual allowances under § 97.421 and if the Administrator makes the determination under paragraph (c)(1) of this section before making deductions for the source that includes such recipient under § 97.424(b) for such control period, then the Administrator will deduct from the account in which such TR NO_X Annual allowances were recorded an amount of TR NO_X Annual allowances allocated for the same or a prior control period equal to the amount of such already recorded TR NO_X Annual allowances. The authorized account representative shall ensure that there are sufficient TR NO_X Annual allowances in such account for completion of the deduction.

(4) If the Administrator already recorded such TR NO_X Annual allowances under § 97.421 and if the Administrator makes the determination under paragraph (c)(1) of this section after making deductions for the source that includes such recipient under § 97.424(b) for such control period, then the Administrator will not make any deduction to take account of such already recorded TR NO_X Annual allowances.

(5)(i) With regard to the TR NO_X Annual allowances that are not recorded, or that are deducted as an incorrect allocation, in accordance with paragraphs (c)(2) and (3) of this section for a recipient under paragraph (c)(1)(i) of this section, the Administrator will:

(A) Transfer such TR NO_X Annual allowances to the new unit set-aside for such control period for the State from whose NO_X Annual trading budget the TR NO_X Annual allowances were allocated; or

(B) If the State has a SIP revision approved under § 52.38(a)(4) or (5) covering such control period, include such TR NO_X Annual allowances in the portion of the State NO_X Annual trading budget that may be allocated for such control period in accordance with such SIP revision.

(ii) With regard to the TR NO_X Annual allowances that were not allocated from the Indian country new unit set-aside for such control period and that are not recorded, or that are deducted as an incorrect allocation, in accordance with paragraphs (c)(2) and (3) of this section for a recipient under paragraph (c)(1)(ii) of this paragraph, the Administrator will:

(A) Transfer such TR NO_X Annual allowances to the new unit set-aside for such control period; or

(B) If the State has a SIP revision approved under § 52.38(a)(4) or (5) covering such control period, include such TR NO_X Annual allowances in the portion of the State NO_X Annual trading budget that may be allocated for such control period in accordance with such SIP revision.

(iii) With regard to the TR NO_X Annual allowances that were allocated from the Indian country new unit set-aside for such control period and that are not recorded, or that are deducted as an incorrect allocation, in accordance with paragraphs (c)(2) and (3) of this section for a recipient under paragraph (c)(1)(ii) of this paragraph, the Administrator will transfer such TR NO_X Annual allowances to the Indian country new unit set-aside for such control period.

§ 97.412 TR NO_X Annual allowance allocations to new units.

(a) For each control period in 2012 and thereafter and for the TR NO_X Annual units in each State, the Administrator will allocate TR NO_X Annual allowances to the TR NO_X Annual units as follows:

(1) The TR NO_X Annual allowances will be allocated to the following TR NO_X Annual units, except as provided in paragraph (a)(10) of this section:

(i) TR NO_X Annual units that are not allocated an amount of TR NO_X Annual allowances in the notice of data availability issued under § 97.411(a)(1);

(ii) TR NO_X Annual units whose allocation of an amount of TR NO_X Annual allowances for such control period in the notice of data availability issued under § 97.411(a)(1) is covered by § 97.411(c)(2) or (3);

(iii) TR NO_X Annual units that are allocated an amount of TR NO_X Annual allowances for such control period in the notice of data availability issued under § 97.411(a)(1), which allocation is terminated for such control period pursuant to § 97.411(a)(2), and that operate during the control period immediately preceding such control period; or

(iv) For purposes of paragraph (a)(9) of this section, TR NO_X Annual units under § 97.411(c)(1)(ii) whose allocation of an amount of TR NO_X Annual allowances for such control period in the notice of data availability issued under § 97.411(b)(1)(ii)(B) is covered by § 97.411(c)(2) or (3).

(2) The Administrator will establish a separate new unit set-aside for the State for each such control period. Each such new unit set-aside will be allocated TR NO_X Annual allowances in an amount equal to the applicable amount of tons of NO_X emissions as set forth in § 97.410(a) and will be allocated additional TR NO_X Annual allowances (if any) in accordance with §§ 97.411(a)(2) and (c)(5) and paragraph (b)(10) of this section.

(3) The Administrator will determine, for each TR NO_X Annual unit described in paragraph (a)(1) of this section, an allocation of TR NO_X Annual allowances for the later of the following control periods and for each subsequent control period:

(i) The control period in 2012;

(ii) The first control period after the control period in which the TR NO_X Annual unit commences commercial operation;

(iii) For a unit described in paragraph (a)(1)(ii) of this section, the first control period in which the TR NO_X Annual unit operates in the State after operating in another jurisdiction and for which

the unit is not already allocated one or more TR NO_X Annual allowances; and

(iv) For a unit described in paragraph (a)(1)(iii) of this section, the first control period after the control period in which the unit resumes operation.

(4)(i) The allocation to each TR NO_X annual unit described in paragraph (a)(1)(i) through (iii) of this section and for each control period described in paragraph (a)(3) of this section will be an amount equal to the unit's total tons of NO_X emissions during the immediately preceding control period.

(ii) The Administrator will adjust the allocation amount in paragraph (a)(4)(i) in accordance with paragraphs (a)(5) through (7) and (12) of this section.

(5) The Administrator will calculate the sum of the TR NO_X Annual allowances determined for all such TR NO_X Annual units under paragraph (a)(4)(i) of this section in the State for such control period.

(6) If the amount of TR NO_X Annual allowances in the new unit set-aside for the State for such control period is greater than or equal to the sum under paragraph (a)(5) of this section, then the Administrator will allocate the amount of TR NO_X Annual allowances determined for each such TR NO_X Annual unit under paragraph (a)(4)(i) of this section.

(7) If the amount of TR NO_X Annual allowances in the new unit set-aside for the State for such control period is less than the sum under paragraph (a)(5) of this section, then the Administrator will allocate to each such TR NO_X Annual unit the amount of the TR NO_X Annual allowances determined under paragraph (a)(4)(i) of this section for the unit, multiplied by the amount of TR NO_X Annual allowances in the new unit set-aside for such control period, divided by the sum under paragraph (a)(5) of this section, and rounded to the nearest allowance.

(8) The Administrator will notify the public, through the promulgation of the notices of data availability described in § 97.411(b)(1)(i) and (ii), of the amount of TR NO_X Annual allowances allocated under paragraphs (a)(2) through (7) and (12) of this section for such control period to each TR NO_X Annual unit eligible for such allocation.

(9) If, after completion of the procedures under paragraphs (a)(5) through (8) of this section for such control period, any unallocated TR NO_X Annual allowances remain in the new unit set-aside for the State for such control period, the Administrator will allocate such TR NO_X Annual allowances as follows—

(i) The Administrator will determine, for each unit described in paragraph (a)(1) of this section that commenced commercial operation during the period starting January 1 of the year before the year of such control period and ending November 30 of year of such control period, the positive difference (if any) between the unit's emissions during such control period and the amount of TR NO_X Annual allowances referenced in the notice of data availability required under § 97.411(b)(1)(ii) for the unit for such control period;

(ii) The Administrator will determine the sum of the positive differences determined under paragraph (a)(9)(i) of this section;

(iii) If the amount of unallocated TR NO_X Annual allowances remaining in the new unit set-aside for the State for such control period is greater than or equal to the sum determined under paragraph (a)(9)(ii) of this section, then the Administrator will allocate the amount of TR NO_X Annual allowances determined for each such TR NO_X Annual unit under paragraph (a)(9)(i) of this section; and

(iv) If the amount of unallocated TR NO_X Annual allowances remaining in the new unit set-aside for the State for such control period is less than the sum under paragraph (a)(9)(ii) of this section, then the Administrator will allocate to each such TR NO_X Annual unit the amount of the TR NO_X Annual allowances determined under paragraph (a)(9)(i) of this section for the unit, multiplied by the amount of unallocated TR NO_X Annual allowances remaining in the new unit set-aside for such control period, divided by the sum under paragraph (a)(9)(ii) of this section, and rounded to the nearest allowance.

(10) If, after completion of the procedures under paragraphs (a)(9) and (12) of this section for such control period, any unallocated TR NO_X Annual allowances remain in the new unit set-aside for the State for such control period, the Administrator will allocate to each TR NO_X Annual unit that is in the State, is allocated an amount of TR NO_X Annual allowances in the notice of data availability issued under § 97.411(a)(1), and continues to be allocated TR NO_X Annual allowances for such control period in accordance with § 97.411(a)(2), an amount of TR NO_X Annual allowances equal to the following: the total amount of such remaining unallocated TR NO_X Annual allowances in such new unit set-aside, multiplied by the unit's allocation under § 97.411(a) for such control period, divided by the remainder of the amount of tons in the applicable State NO_X Annual trading budget minus the sum of the amounts of tons in such new unit set-aside and the Indian country new unit set-aside for the State for such control period, and rounded to the nearest allowance.

(11) The Administrator will notify the public, through the promulgation of the notices of data availability described in § 97.411(b)(1)(iii), (iv), and (v), of the amount of TR NO_X Annual allowances allocated under paragraphs (a)(9), (10), and (12) of this section for such control period to each TR NO_X Annual unit eligible for such allocation.

(12)(i) Notwithstanding the requirements of paragraphs (a)(2) through (11) of this section, if the calculations of allocations of a new unit set-aside for a control period in a given year under paragraph (a)(7) of this section, paragraphs (a)(6) and (9)(iv) of this section, or paragraphs (a)(6), (9)(iii), and (10) of this section would otherwise result in total allocations of such new unit set-aside exceeding the total amount of such new unit set-aside, then the Administrator will adjust the results of the calculations under paragraph (a)(7), (9)(iv), or (10) of this section, as applicable, as follows. The Administrator will list the TR NO_X Annual units in descending order based on the amount of such units' allocations under paragraph (a)(7), (9)(iv), or (10) of this section, as applicable, and, in cases of equal allocation amounts, in alphabetical order of the relevant source's name and numerical order of the relevant unit's identification number, and will reduce each unit's allocation under paragraph (a)(7), (9)(iv), or (10) of this section, as applicable, by one TR NO_X Annual allowance (but not below zero) in the order in which the units are listed and will repeat this reduction process as necessary, until the total allocations of such new unit set-aside equal the total amount of such new unit set-aside.

(ii) Notwithstanding the requirements of paragraphs (a)(10) and (11) of this section, if the calculations of allocations of a new unit set-aside for a control period in a given year under paragraphs (a)(6), (9)(iii), and (10) of this section would otherwise result in a total allocations of such new unit set-aside less than the total amount of such new unit set-aside, then the Administrator will adjust the results of the calculations under paragraph (a)(10) of this section, as follows. The Administrator will list the TR NO_X Annual units in descending order based on the amount of such units' allocations under paragraph (a)(10) of this section and, in cases of equal allocation amounts, in alphabetical order of the relevant source's name and numerical order of the relevant unit's identification number, and will increase each unit's

allocation under paragraph (a)(10) of this section by one TR NO_X Annual allowance in the order in which the units are listed and will repeat this increase process as necessary, until the total allocations of such new unit set-aside equal the total amount of such new unit set-aside.

(b) For each control period in 2012 and thereafter and for the TR NO_X Annual units located in Indian country within the borders of each State, the Administrator will allocate TR NO_X Annual allowances to the TR NO_X Annual units as follows:

(1) The TR NO_X Annual allowances will be allocated to the following TR NO_X Annual units, except as provided in paragraph (b)(10) of this section:

(i) TR NO_X Annual units that are not allocated an amount of TR NO_X Annual allowances in the notice of data availability issued under § 97.411(a)(1); or

(ii) For purposes of paragraph (b)(9) of this section, TR NO_X Annual units under § 97.411(c)(1)(ii) whose allocation of an amount of TR NO_X Annual allowances for such control period in the notice of data availability issued under § 97.411(b)(2)(ii)(B) is covered by § 97.411(c)(2) or (3).

(2) The Administrator will establish a separate Indian country new unit set-aside for the State for each such control period. Each such Indian country new unit set-aside will be allocated TR NO_X Annual allowances in an amount equal to the applicable amount of tons of NO_X emissions as set forth in § 97.410(a) and will be allocated additional TR NO_X Annual allowances (if any) in accordance with § 97.411(c)(5).

(3) The Administrator will determine, for each TR NO_X Annual unit described in paragraph (b)(1) of this section, an allocation of TR NO_X Annual allowances for the later of the following control periods and for each subsequent control period:

(i) The control period in 2012; and

(ii) The first control period after the control period in which the TR NO_X Annual unit commences commercial operation.

(4)(i) The allocation to each TR NO_X annual unit described in paragraph (b)(1)(i) of this section and for each control period described in paragraph (b)(3) of this section will be an amount equal to the unit's total tons of NO_X emissions during the immediately preceding control period.

(ii) The Administrator will adjust the allocation amount in paragraph (b)(4)(i) in accordance with paragraphs (b)(5) through (7) and (12) of this section.

(5) The Administrator will calculate the sum of the TR NO_X Annual allowances determined for all such TR NO_X Annual units under paragraph (b)(4)(i) of this section in Indian country within the borders of the State for such control period.

(6) If the amount of TR NO_X Annual allowances in the Indian country new unit set-aside for the State for such control period is greater than or equal to the sum under paragraph (b)(5) of this section, then the Administrator will allocate the amount of TR NO_X Annual allowances determined for each such TR NO_X Annual unit under paragraph (b)(4)(i) of this section.

(7) If the amount of TR NO_X Annual allowances in the Indian country new unit set-aside for the State for such control period is less than the sum under paragraph (b)(5) of this section, then the Administrator will allocate to each such TR NO_X Annual unit the amount of the TR NO_X Annual allowances determined under paragraph (b)(4)(i) of this section for the unit, multiplied by the amount of TR NO_X Annual allowances in the Indian country new unit set-aside for such control period, divided by the sum under paragraph (b)(5) of this section, and rounded to the nearest allowance.

(8) The Administrator will notify the public, through the promulgation of the notices of data availability described in § 97.411(b)(2)(i) and (ii), of the amount of TR NO_X Annual allowances allocated under paragraphs (b)(2) through (7) and (12) of this section for such control period to each TR NO_X Annual unit eligible for such allocation.

(9) If, after completion of the procedures under paragraphs (b)(5) through (8) of this section for such control period, any unallocated TR NO_X Annual allowances remain in the Indian country new unit set-aside for the State for such control period, the Administrator will allocate such TR NO_X Annual allowances as follows—

(i) The Administrator will determine, for each unit described in paragraph (b)(1) of this section that commenced commercial operation during the period starting January 1 of the year before the year of such control period and ending November 30 of year of such control period, the positive difference (if any) between the unit's emissions during such control period and the amount of TR NO_X Annual allowances referenced in the notice of data availability required under § 97.411(b)(2)(ii) for the unit for such control period;

(ii) The Administrator will determine the sum of the positive differences determined under paragraph (b)(9)(i) of this section;

(iii) If the amount of unallocated TR NO_X Annual allowances remaining in the Indian country new unit set-aside for the State for such control period is greater than or equal to the sum determined under paragraph (b)(9)(ii) of this section, then the Administrator will allocate the amount of TR NO_X Annual allowances determined for each such TR NO_X Annual unit under paragraph (b)(9)(i) of this section; and

(iv) If the amount of unallocated TR NO_X Annual allowances remaining in the Indian country new unit set-aside for the State for such control period is less than the sum under paragraph (b)(9)(ii) of this section, then the Administrator will allocate to each such TR NO_X Annual unit the amount of the TR NO_X Annual allowances determined under paragraph (b)(9)(i) of this section for the unit, multiplied by the amount of unallocated TR NO_X Annual allowances remaining in the Indian country new unit set-aside for such control period, divided by the sum under paragraph (b)(9)(ii) of this section, and rounded to the nearest allowance.

(10) If, after completion of the procedures under paragraphs (b)(9) and (12) of this section for such control period, any unallocated TR NO_X Annual allowances remain in the Indian country new unit set-aside for the State for such control period, the Administrator will:

(i) Transfer such unallocated TR NO_X Annual allowances to the new unit set-aside for the State for such control period; or

(ii) If the State has a SIP revision approved under § 52.38(a)(4) or (5) covering such control period, include such unallocated TR NO_X Annual allowances in the portion of the State NO_X Annual trading budget that may be allocated for such control period in accordance with such SIP revision.

(11) The Administrator will notify the public, through the promulgation of the notices of data availability described in § 97.411(b)(2)(iii), (iv), and (v), of the amount of TR NO_X Annual allowances allocated under paragraphs (b)(9), (10), and (12) of this section for such control period to each TR NO_X Annual unit eligible for such allocation.

(12)(i) Notwithstanding the requirements of paragraphs (b)(2) through (11) of this section, if the calculations of allocations of an Indian country new unit set-aside for a control period in a given year under paragraph (b)(7) of this section, paragraphs (b)(6) and (9)(iv) of this section, or paragraphs (b)(6), (9)(iii), and (10) of this section would otherwise result in total allocations of such Indian country new unit set-aside exceeding the total amount of such Indian country new unit set-aside, then the Administrator will adjust the results of the calculations

under paragraph (b)(7), (9)(iv), or (10) of this section, as applicable, as follows. The Administrator will list the TR NO_X Annual units in descending order based on the amount of such units' allocations under paragraph (b)(7), (9)(iv), or (10) of this section, as applicable, and, in cases of equal allocation amounts, in alphabetical order of the relevant source's name and numerical order of the relevant unit's identification number, and will reduce each unit's allocation under paragraph (b)(7), (9)(iv), or (10) of this section, as applicable, by one TR NO_X Annual allowance (but not below zero) in the order in which the units are listed and will repeat this reduction process as necessary, until the total allocations of such Indian country new unit set-aside equal the total amount of such Indian country new unit set-aside.

(ii) Notwithstanding the requirements of paragraphs (b)(10) and (11) of this section, if the calculations of allocations of an Indian country new unit set-aside for a control period in a given year under paragraphs (b)(6), (9)(iii), and (10) of this section would otherwise result in a total allocations of such Indian country new unit set-aside less than the total amount of such Indian country new unit set-aside, then the Administrator will adjust the results of the calculations under paragraph (b)(10) of this section, as follows. The Administrator will list the TR NO_X Annual units in descending order based on the amount of such units' allocations under paragraph (b)(10) of this section and, in cases of equal allocation amounts, in alphabetical order of the relevant source's name and numerical order of the relevant unit's identification number, and will increase each unit's allocation under paragraph (b)(10) of this section by one TR NO_X Annual allowance in the order in which the units are listed and will repeat this increase process as necessary, until the total allocations of such Indian country new unit set-aside equal the total amount of such Indian country new unit set-aside.

§ 97.413 Authorization of designated representative and alternate designated representative.

(a) Except as provided under § 97.415, each TR NO_X Annual source, including all TR NO_X Annual units at the source, shall have one and only one designated representative, with regard to all matters under the TR NO_X Annual Trading Program.

(1) The designated representative shall be selected by an agreement binding on the owners and operators of the source and all TR NO_X Annual units at the source and shall act in accordance with the certification statement in § 97.416(a)(4)(iii).

(2) Upon and after receipt by the Administrator of a complete certificate of representation under § 97.416:

(i) The designated representative shall be authorized and shall represent and, by his or her representations, actions, inactions, or submissions, legally bind each owner and operator of the source and each TR NO_X Annual unit at the source in all matters pertaining to the TR NO_X Annual Trading Program, notwithstanding any agreement between the designated representative and such owners and operators; and

(ii) The owners and operators of the source and each TR NO_X Annual unit at the source shall be bound by any decision or order issued to the designated representative by the Administrator regarding the source or any such unit.

(b) Except as provided under § 97.415, each TR NO_X Annual source may have one and only one alternate designated representative, who may act on behalf of the designated representative. The agreement by which the alternate designated representative is selected shall include a procedure for authorizing the alternate designated representative to act in lieu of the designated representative.

(1) The alternate designated representative shall be selected by an agreement binding on the owners and operators of the source and all TR NO_X Annual units at the source and shall act in accordance with the certification statement in § 97.416(a)(4)(iii).

(2) Upon and after receipt by the Administrator of a complete certificate of representation under § 97.416,

(i) The alternate designated representative shall be authorized;

(ii) Any representation, action, inaction, or submission by the alternate designated representative shall be deemed to be a representation, action, inaction, or submission by the designated representative; and

(iii) The owners and operators of the source and each TR NO_X Annual unit at the source shall be bound by any decision or order issued to the alternate designated representative by the Administrator regarding the source or any such unit.

(c) Except in this section, § 97.402, and §§ 97.414 through 97.418, whenever the term ''designated representative'' (as distinguished from the term ''common designated representative'') is used in this subpart, the term shall be construed to include the designated representative or any alternate designated representative.

§ 97.414 Responsibilities of designated representative and alternate designated representative.

(a) Except as provided under § 97.418 concerning delegation of authority to make submissions, each submission under the TR NO_X Annual Trading Program shall be made, signed, and certified by the designated representative or alternate designated representative for each TR NO_X Annual source and TR NO_X Annual unit for which the submission is made. Each such submission shall include the following certification statement by the designated representative or alternate designated representative: ''I am authorized to make this submission on behalf of the owners and operators of the source or units for which the submission is made. I certify under penalty of law that I have personally examined, and am familiar with, the statements and information submitted in this document and all its attachments. Based on my inquiry of those individuals with primary responsibility for obtaining the information, I certify that the statements and information are to the best of my knowledge and belief true, accurate, and complete. I am aware that there are significant penalties for submitting false statements and information or omitting required statements and information, including the possibility of fine or imprisonment.''

(b) The Administrator will accept or act on a submission made for a TR NO_X Annual source or a TR NO_X Annual unit only if the submission has been made, signed, and certified in accordance with paragraph (a) of this section and § 97.418.

§ 97.415 Changing designated representative and alternate designated representative; changes in owners and operators; changes in units at the source.

(a) *Changing designated representative.* The designated representative may be changed at any time upon receipt by the Administrator of a superseding complete certificate of representation under § 97.416. Notwithstanding any such change, all representations, actions, inactions, and submissions by the previous designated representative before the time and date when the Administrator receives the superseding certificate of representation shall be binding on the new designated representative and the owners and operators of the TR NO_X Annual source and the TR NO_X Annual units at the source.

(b) *Changing alternate designated representative.* The alternate designated representative may be changed at any

time upon receipt by the Administrator of a superseding complete certificate of representation under § 97.416. Notwithstanding any such change, all representations, actions, inactions, and submissions by the previous alternate designated representative before the time and date when the Administrator receives the superseding certificate of representation shall be binding on the new alternate designated representative, the designated representative, and the owners and operators of the TR NO_X Annual source and the TR NO_X Annual units at the source.

(c) *Changes in owners and operators.* (1) In the event an owner or operator of a TR NO_X Annual source or a TR NO_X Annual unit at the source is not included in the list of owners and operators in the certificate of representation under § 97.416, such owner or operator shall be deemed to be subject to and bound by the certificate of representation, the representations, actions, inactions, and submissions of the designated representative and any alternate designated representative of the source or unit, and the decisions and orders of the Administrator, as if the owner or operator were included in such list.

(2) Within 30 days after any change in the owners and operators of a TR NO_X Annual source or a TR NO_X Annual unit at the source, including the addition or removal of an owner or operator, the designated representative or any alternate designated representative shall submit a revision to the certificate of representation under § 97.416 amending the list of owners and operators to reflect the change.

(d) *Changes in units at the source.* Within 30 days of any change in which units are located at a TR NO_X Annual source (including the addition or removal of a unit), the designated representative or any alternate designated representative shall submit a certificate of representation under § 97.416 amending the list of units to reflect the change.

(1) If the change is the addition of a unit that operated (other than for purposes of testing by the manufacturer before initial installation) before being located at the source, then the certificate of representation shall identify, in a format prescribed by the Administrator, the entity from whom the unit was purchased or otherwise obtained (including name, address, telephone number, and facsimile number (if any)), the date on which the unit was purchased or otherwise obtained, and the date on which the unit became located at the source.

(2) If the change is the removal of a unit, then the certificate of representation shall identify, in a format prescribed by the Administrator, the entity to which the unit was sold or that otherwise obtained the unit (including name, address, telephone number, and facsimile number (if any)), the date on which the unit was sold or otherwise obtained, and the date on which the unit became no longer located at the source.

§ 97.416 Certificate of representation.

(a) A complete certificate of representation for a designated representative or an alternate designated representative shall include the following elements in a format prescribed by the Administrator:

(1) Identification of the TR NO_X Annual source, and each TR NO_X Annual unit at the source, for which the certificate of representation is submitted, including source name, source category and NAICS code (or, in the absence of a NAICS code, an equivalent code), State, plant code, county, latitude and longitude, unit identification number and type, identification number and nameplate capacity (in MWe, rounded to the nearest tenth) of each generator served by each such unit, actual or projected date of commencement of commercial operation, and a statement of whether such source is located in Indian Country. If a projected date of commencement of commercial operation is provided, the actual date of commencement of commercial operation shall be provided when such information becomes available.

(2) The name, address, e-mail address (if any), telephone number, and facsimile transmission number (if any) of the designated representative and any alternate designated representative.

(3) A list of the owners and operators of the TR NO_X Annual source and of each TR NO_X Annual unit at the source.

(4) The following certification statements by the designated representative and any alternate designated representative—

(i) ''I certify that I was selected as the designated representative or alternate designated representative, as applicable, by an agreement binding on the owners and operators of the source and each TR NO_X Annual unit at the source.''

(ii) ''I certify that I have all the necessary authority to carry out my duties and responsibilities under the TR NO_X Annual Trading Program on behalf of the owners and operators of the source and of each TR NO_X Annual unit at the source and that each such owner and operator shall be fully bound by my representations, actions, inactions, or submissions and by any decision or order issued to me by the Administrator regarding the source or unit.''

(iii) ''Where there are multiple holders of a legal or equitable title to, or a leasehold interest in, a TR NO_X Annual unit, or where a utility or industrial customer purchases power from a TR NO_X Annual unit under a life-of-the-unit, firm power contractual arrangement, I certify that: I have given a written notice of my selection as the 'designated representative' or 'alternate designated representative', as applicable, and of the agreement by which I was selected to each owner and operator of the source and of each TR NO_X Annual unit at the source; and TR NO_X Annual allowances and proceeds of transactions involving TR NO_X Annual allowances will be deemed to be held or distributed in proportion to each holder's legal, equitable, leasehold, or contractual reservation or entitlement, except that, if such multiple holders have expressly provided for a different distribution of TR NO_X Annual allowances by contract, TR NO_X Annual allowances and proceeds of transactions involving TR NO_X Annual allowances will be deemed to be held or distributed in accordance with the contract.''

(5) The signature of the designated representative and any alternate designated representative and the dates signed.

(b) Unless otherwise required by the Administrator, documents of agreement referred to in the certificate of representation shall not be submitted to the Administrator. The Administrator shall not be under any obligation to review or evaluate the sufficiency of such documents, if submitted.

§ 97.417 Objections concerning designated representative and alternate designated representative.

(a) Once a complete certificate of representation under § 97.416 has been submitted and received, the Administrator will rely on the certificate of representation unless and until a superseding complete certificate of representation under § 97.416 is received by the Administrator.

(b) Except as provided in paragraph (a) of this section, no objection or other communication submitted to the Administrator concerning the authorization, or any representation, action, inaction, or submission, of a designated representative or alternate designated representative shall affect any representation, action, inaction, or submission of the designated representative or alternate designated representative or the finality of any

decision or order by the Administrator under the TR NO_X Annual Trading Program.

(c) The Administrator will not adjudicate any private legal dispute concerning the authorization or any representation, action, inaction, or submission of any designated representative or alternate designated representative, including private legal disputes concerning the proceeds of TR NO_X Annual allowance transfers.

§ 97.418 Delegation by designated representative and alternate designated representative.

(a) A designated representative may delegate, to one or more natural persons, his or her authority to make an electronic submission to the Administrator provided for or required under this subpart.

(b) An alternate designated representative may delegate, to one or more natural persons, his or her authority to make an electronic submission to the Administrator provided for or required under this subpart.

(c) In order to delegate authority to a natural person to make an electronic submission to the Administrator in accordance with paragraph (a) or (b) of this section, the designated representative or alternate designated representative, as appropriate, must submit to the Administrator a notice of delegation, in a format prescribed by the Administrator, that includes the following elements:

(1) The name, address, e-mail address, telephone number, and facsimile transmission number (if any) of such designated representative or alternate designated representative;

(2) The name, address, e-mail address, telephone number, and facsimile transmission number (if any) of each such natural person (referred to in this section as an ''agent'');

(3) For each such natural person, a list of the type or types of electronic submissions under paragraph (a) or (b) of this section for which authority is delegated to him or her; and

(4) The following certification statements by such designated representative or alternate designated representative:

(i) ''I agree that any electronic submission to the Administrator that is made by an agent identified in this notice of delegation and of a type listed for such agent in this notice of delegation and that is made when I am a designated representative or alternate designated representative, as appropriate, and before this notice of delegation is superseded by another notice of delegation under 40 CFR 97.418(d) shall be deemed to be an electronic submission by me.''

(ii) ''Until this notice of delegation is superseded by another notice of delegation under 40 CFR 97.418(d), I agree to maintain an e-mail account and to notify the Administrator immediately of any change in my e-mail address unless all delegation of authority by me under 40 CFR 97.418 is terminated.''.

(d) A notice of delegation submitted under paragraph (c) of this section shall be effective, with regard to the designated representative or alternate designated representative identified in such notice, upon receipt of such notice by the Administrator and until receipt by the Administrator of a superseding notice of delegation submitted by such designated representative or alternate designated representative, as appropriate. The superseding notice of delegation may replace any previously identified agent, add a new agent, or eliminate entirely any delegation of authority.

(e) Any electronic submission covered by the certification in paragraph (c)(4)(i) of this section and made in accordance with a notice of delegation effective under paragraph (d) of this section shall be deemed to be an electronic submission by the designated representative or alternate designated representative submitting such notice of delegation.

§ 97.419 [Reserved]

§ 97.420 Establishment of compliance accounts, assurance accounts, and general accounts.

(a) *Compliance accounts.* Upon receipt of a complete certificate of representation under § 97.416, the Administrator will establish a compliance account for the TR NO_X Annual source for which the certificate of representation was submitted, unless the source already has a compliance account. The designated representative and any alternate designated representative of the source shall be the authorized account representative and the alternate authorized account representative respectively of the compliance account.

(b) *Assurance accounts.* The Administrator will establish assurance accounts for certain owners and operators and States in accordance with § 97.425(b)(3).

(c) *General accounts.* (1) Application for general account. (i) Any person may apply to open a general account, for the purpose of holding and transferring TR NO_X Annual allowances, by submitting to the Administrator a complete application for a general account. Such application shall designate one and only one authorized account representative and may designate one and only one alternate authorized account representative who may act on behalf of the authorized account representative.

(A) The authorized account representative and alternate authorized account representative shall be selected by an agreement binding on the persons who have an ownership interest with respect to TR NO_X Annual allowances held in the general account.

(B) The agreement by which the alternate authorized account representative is selected shall include a procedure for authorizing the alternate authorized account representative to act in lieu of the authorized account representative.

(ii) A complete application for a general account shall include the following elements in a format prescribed by the Administrator:

(A) Name, mailing address, e-mail address (if any), telephone number, and facsimile transmission number (if any) of the authorized account representative and any alternate authorized account representative;

(B) An identifying name for the general account;

(C) A list of all persons subject to a binding agreement for the authorized account representative and any alternate authorized account representative to represent their ownership interest with respect to the TR NO_X Annual allowances held in the general account;

(D) The following certification statement by the authorized account representative and any alternate authorized account representative: ''I certify that I was selected as the authorized account representative or the alternate authorized account representative, as applicable, by an agreement that is binding on all persons who have an ownership interest with respect to TR NO_X Annual allowances held in the general account. I certify that I have all the necessary authority to carry out my duties and responsibilities under the TR NO_X Annual Trading Program on behalf of such persons and that each such person shall be fully bound by my representations, actions, inactions, or submissions and by any decision or order issued to me by the Administrator regarding the general account.''

(E) The signature of the authorized account representative and any alternate authorized account representative and the dates signed.

(iii) Unless otherwise required by the Administrator, documents of agreement referred to in the application for a

general account shall not be submitted to the Administrator. The Administrator shall not be under any obligation to review or evaluate the sufficiency of such documents, if submitted.

(2) Authorization of authorized account representative and alternate authorized account representative. (i) Upon receipt by the Administrator of a complete application for a general account under paragraph (b)(1) of this section, the Administrator will establish a general account for the person or persons for whom the application is submitted, and upon and after such receipt by the Administrator:

(A) The authorized account representative of the general account shall be authorized and shall represent and, by his or her representations, actions, inactions, or submissions, legally bind each person who has an ownership interest with respect to TR NO_X Annual allowances held in the general account in all matters pertaining to the TR NO_X Annual Trading Program, notwithstanding any agreement between the authorized account representative and such person.

(B) Any alternate authorized account representative shall be authorized, and any representation, action, inaction, or submission by any alternate authorized account representative shall be deemed to be a representation, action, inaction, or submission by the authorized account representative.

(C) Each person who has an ownership interest with respect to TR NO_X Annual allowances held in the general account shall be bound by any decision or order issued to the authorized account representative or alternate authorized account representative by the Administrator regarding the general account.

(ii) Except as provided in paragraph (c)(5) of this section concerning delegation of authority to make submissions, each submission concerning the general account shall be made, signed, and certified by the authorized account representative or any alternate authorized account representative for the persons having an ownership interest with respect to TR NO_X Annual allowances held in the general account. Each such submission shall include the following certification statement by the authorized account representative or any alternate authorized account representative: ''I am authorized to make this submission on behalf of the persons having an ownership interest with respect to the TR NO_X Annual allowances held in the general account. I certify under penalty of law that I have personally examined, and am familiar with, the statements and information submitted in this document and all its attachments. Based on my inquiry of those individuals with primary responsibility for obtaining the information, I certify that the statements and information are to the best of my knowledge and belief true, accurate, and complete. I am aware that there are significant penalties for submitting false statements and information or omitting required statements and information, including the possibility of fine or imprisonment.''

(iii) Except in this section, whenever the term ''authorized account representative'' is used in this subpart, the term shall be construed to include the authorized account representative or any alternate authorized account representative.

(3) Changing authorized account representative and alternate authorized account representative; changes in persons with ownership interest. (i) The authorized account representative of a general account may be changed at any time upon receipt by the Administrator of a superseding complete application for a general account under paragraph (c)(1) of this section. Notwithstanding any such change, all representations, actions, inactions, and submissions by the previous authorized account representative before the time and date when the Administrator receives the superseding application for a general account shall be binding on the new authorized account representative and the persons with an ownership interest with respect to the TR NO_X Annual allowances in the general account.

(ii) The alternate authorized account representative of a general account may be changed at any time upon receipt by the Administrator of a superseding complete application for a general account under paragraph (c)(1) of this section. Notwithstanding any such change, all representations, actions, inactions, and submissions by the previous alternate authorized account representative before the time and date when the Administrator receives the superseding application for a general account shall be binding on the new alternate authorized account representative, the authorized account representative, and the persons with an ownership interest with respect to the TR NO_X Annual allowances in the general account.

(iii)(A) In the event a person having an ownership interest with respect to TR NO_X Annual allowances in the general account is not included in the list of such persons in the application for a general account, such person shall be deemed to be subject to and bound by the application for a general account, the representation, actions, inactions, and submissions of the authorized account representative and any alternate authorized account representative of the account, and the decisions and orders of the Administrator, as if the person were included in such list.

(B) Within 30 days after any change in the persons having an ownership interest with respect to NO_X Annual allowances in the general account, including the addition or removal of a person, the authorized account representative or any alternate authorized account representative shall submit a revision to the application for a general account amending the list of persons having an ownership interest with respect to the TR NO_X Annual allowances in the general account to include the change.

(4) Objections concerning authorized account representative and alternate authorized account representative. (i) Once a complete application for a general account under paragraph (c)(1) of this section has been submitted and received, the Administrator will rely on the application unless and until a superseding complete application for a general account under paragraph (b)(1) of this section is received by the Administrator.

(ii) Except as provided in paragraph (c)(4)(i) of this section, no objection or other communication submitted to the Administrator concerning the authorization, or any representation, action, inaction, or submission of the authorized account representative or any alternate authorized account representative of a general account shall affect any representation, action, inaction, or submission of the authorized account representative or any alternate authorized account representative or the finality of any decision or order by the Administrator under the TR NO_X Annual Trading Program.

(iii) The Administrator will not adjudicate any private legal dispute concerning the authorization or any representation, action, inaction, or submission of the authorized account representative or any alternate authorized account representative of a general account, including private legal disputes concerning the proceeds of TR NO_X Annual allowance transfers.

(5) Delegation by authorized account representative and alternate authorized account representative. (i) An authorized account representative of a general account may delegate, to one or more natural persons, his or her authority to make an electronic submission to the Administrator

provided for or required under this subpart.

(ii) An alternate authorized account representative of a general account may delegate, to one or more natural persons, his or her authority to make an electronic submission to the Administrator provided for or required under this subpart.

(iii) In order to delegate authority to a natural person to make an electronic submission to the Administrator in accordance with paragraph (c)(5)(i) or (ii) of this section, the authorized account representative or alternate authorized account representative, as appropriate, must submit to the Administrator a notice of delegation, in a format prescribed by the Administrator, that includes the following elements:

(A) The name, address, e-mail address, telephone number, and facsimile transmission number (if any) of such authorized account representative or alternate authorized account representative;

(B) The name, address, e-mail address, telephone number, and facsimile transmission number (if any) of each such natural person (referred to in this section as an ''agent'');

(C) For each such natural person, a list of the type or types of electronic submissions under paragraph (c)(5)(i) or (ii) of this section for which authority is delegated to him or her;

(D) The following certification statement by such authorized account representative or alternate authorized account representative: ''I agree that any electronic submission to the Administrator that is made by an agent identified in this notice of delegation and of a type listed for such agent in this notice of delegation and that is made when I am an authorized account representative or alternate authorized representative, as appropriate, and before this notice of delegation is superseded by another notice of delegation under 40 CFR 97.420(c)(5)(iv) shall be deemed to be an electronic submission by me.''; and

(E) The following certification statement by such authorized account representative or alternate authorized account representative: ''Until this notice of delegation is superseded by another notice of delegation under 40 CFR 97.420(c)(5)(iv), I agree to maintain an e-mail account and to notify the Administrator immediately of any change in my e-mail address unless all delegation of authority by me under 40 CFR 97.420(c)(5) is terminated.''.

(iv) A notice of delegation submitted under paragraph (c)(5)(iii) of this section shall be effective, with regard to the authorized account representative or alternate authorized account representative identified in such notice, upon receipt of such notice by the Administrator and until receipt by the Administrator of a superseding notice of delegation submitted by such authorized account representative or alternate authorized account representative, as appropriate. The superseding notice of delegation may replace any previously identified agent, add a new agent, or eliminate entirely any delegation of authority.

(v) Any electronic submission covered by the certification in paragraph (c)(5)(iii)(D) of this section and made in accordance with a notice of delegation effective under paragraph (c)(5)(iv) of this section shall be deemed to be an electronic submission by the designated representative or alternate designated representative submitting such notice of delegation.

(6) Closing a general account. (i) The authorized account representative or alternate authorized account representative of a general account may submit to the Administrator a request to close the account. Such request shall include a correctly submitted TR NO_X Annual allowance transfer under § 97.422 for any TR NO_X Annual allowances in the account to one or more other Allowance Management System accounts.

(ii) If a general account has no TR NO_X Annual allowance transfers to or from the account for a 12-month period or longer and does not contain any TR NO_X Annual allowances, the Administrator may notify the authorized account representative for the account that the account will be closed after 30 days after the notice is sent. The account will be closed after the 30-day period unless, before the end of the 30-day period, the Administrator receives a correctly submitted TR NO_X Annual allowance transfer under § 97.422 to the account or a statement submitted by the authorized account representative or alternate authorized account representative demonstrating to the satisfaction of the Administrator good cause as to why the account should not be closed.

(d) *Account identification.* The Administrator will assign a unique identifying number to each account established under paragraph (a), (b), or (c) of this section.

(e) *Responsibilities of authorized account representative and alternate authorized account representative.* After the establishment of a compliance account or general account, the Administrator will accept or act on a submission pertaining to the account, including, but not limited to, submissions concerning the deduction or transfer of TR NO_X Annual allowances in the account, only if the submission has been made, signed, and certified in accordance with §§ 97.414(a) and 97.418 or paragraphs (c)(2)(ii) and (c)(5) of this section.

§ 97.421 Recordation of TR NO_X Annual allowance allocations and auction results.

(a) By November 7, 2011, the Administrator will record in each TR NO_X Annual source's compliance account the TR NO_X Annual allowances allocated to the TR NO_X Annual units at the source in accordance with § 97.411(a) for the control period in 2012.

(b) By November 7, 2011, the Administrator will record in each TR NO_X Annual source's compliance account the TR NO_X Annual allowances allocated to the TR NO_X Annual units at the source in accordance with § 97.411(a) for the control period in 2013, unless the State in which the source is located notifies the Administrator in writing by October 17, 2011 of the State's intent to submit to the Administrator a complete SIP revision by April 1, 2012 meeting the requirements of § 52.38(a)(3)(i) through (iv) of this chapter.

(1) If, by April 1, 2012, the State does not submit to the Administrator such complete SIP revision, the Administrator will record by April 15, 2012 in each TR NO_X Annual source's compliance account the TR NO_X Annual allowances allocated to the TR NO_X Annual units at the source in accordance with § 97.411(a) for the control period in 2013.

(2) If the State submits to the Administrator by April 1, 2012, and the Administrator approves by October 1, 2012, such complete SIP revision, the Administrator will record by October 1, 2012 in each TR NO_X Annual source's compliance account the TR NO_X Annual allowances allocated to the TR NO_X Annual units at the source as provided in such approved, complete SIP revision for the control period in 2013.

(3) If the State submits to the Administrator by April 1, 2012, and the Administrator does not approve by October 1, 2012, such complete SIP revision, the Administrator will record by October 1, 2012 in each TR NO_X Annual source's compliance account the TR NO_X Annual allowances allocated to the TR NO_X Annual units at the source in accordance with § 97.411(a) for the control period in 2013.

(c) By July 1, 2013, the Administrator will record in each TR NO_X Annual source's compliance account the TR

NO_X Annual allowances allocated to the TR NO_X Annual units at the source, or in each appropriate Allowance Management System account the TR NO_X Annual allowances auctioned to TR NO_X Annual units, in accordance with § 97.411(a), or with a SIP revision approved under § 52.38(a)(4) or (5) of this chapter, for the control period in 2014 and 2015.

(d) By July 1, 2014, the Administrator will record in each TR NO_X Annual source's compliance account the TR NO_X Annual allowances allocated to the TR NO_X Annual units at the source, or in each appropriate Allowance Management System account the TR NO_X Annual allowances auctioned to TR NO_X Annual units, in accordance with § 97.411(a), or with a SIP revision approved under § 52.38(a)(4) or (5) of this chapter, for the control period in 2016 and 2017.

(e) By July 1, 2015, the Administrator will record in each TR NO_X Annual source's compliance account the TR NO_X Annual allowances allocated to the TR NO_X Annual units at the source, or in each appropriate Allowance Management System account the TR NO_X Annual allowances auctioned to TR NO_X Annual units, in accordance with § 97.411(a), or with a SIP revision approved under § 52.38(a)(4) or (5) of this chapter, for the control period in 2018 and 2019.

(f) By July 1, 2016 and July 1 of each year thereafter, the Administrator will record in each TR NO_X Annual source's compliance account the TR NO_X Annual allowances allocated to the TR NO_X Annual units at the source, or in each appropriate Allowance Management System account the TR NO_X Annual allowances auctioned to TR NO_X Annual units, in accordance with § 97.411(a), or with a SIP revision approved under § 52.38(a)(4) or (5) of this chapter, for the control period in the fourth year after the year of the applicable recordation deadline under this paragraph.

(g) By August 1, 2012 and August 1 of each year thereafter, the Administrator will record in each TR NO_X Annual source's compliance account the TR NO_X Annual allowances allocated to the TR NO_X Annual units at the source, or in each appropriate Allowance Management System account the TR NO_X Annual allowances auctioned to TR NO_X Annual units, in accordance with § 97.412(a)(2) through (8) and (12), or with a SIP revision approved under § 52.38(a)(4) or (5) of this chapter, for the control period in the year of the applicable recordation deadline under this paragraph.

(h) By August 1, 2012 and August 1 of each year thereafter, the Administrator will record in each TR NO_X Annual source's compliance account the TR NO_X Annual allowances allocated to the TR NO_X Annual units at the source in accordance with § 97.412(b)(2) through (8) and (12) for the control period in the year of the applicable recordation deadline under this paragraph.

(i) By February 15, 2013 and February 15 of each year thereafter, the Administrator will record in each TR NO_X Annual source's compliance account the TR NO_X Annual allowances allocated to the TR NO_X Annual units at the source in accordance with § 97.412(a)(9) through (12), for the control period in the year before the year of the applicable recordation deadline under this paragraph.

(j) By the date on which any allocation or auction results, other than an allocation or auction results described in paragraphs (a) through (i) of this section, of TR NO_X Annual allowances to a recipient is made by or are submitted to the Administrator in accordance with § 97.411 or § 97.412 or with a SIP revision approved under § 52.38(a)(4) or (5) of this chapter, the Administrator will record such allocation or auction results in the appropriate Allowance Management System account.

(k) When recording the allocation or auction of TR NO_X Annual allowances to a TR NO_X Annual unit or other entity in an Allowance Management System account, the Administrator will assign each TR NO_X Annual allowance a unique identification number that will include digits identifying the year of the control period for which the TR NO_X Annual allowance is allocated or auctioned.

§ 97.422 Submission of TR NO_X Annual allowance transfers.

(a) An authorized account representative seeking recordation of a TR NO_X Annual allowance transfer shall submit the transfer to the Administrator.

(b) A TR NO_X Annual allowance transfer shall be correctly submitted if:

(1) The transfer includes the following elements, in a format prescribed by the Administrator:

(i) The account numbers established by the Administrator for both the transferor and transferee accounts;

(ii) The serial number of each TR NO_X Annual allowance that is in the transferor account and is to be transferred; and

(iii) The name and signature of the authorized account representative of the transferor account and the date signed; and

(2) When the Administrator attempts to record the transfer, the transferor account includes each TR NO_X Annual allowance identified by serial number in the transfer.

§ 97.423 Recordation of TR NO_X Annual allowance transfers.

(a) Within 5 business days (except as provided in paragraph (b) of this section) of receiving a TR NO_X Annual allowance transfer that is correctly submitted under § 97.422, the Administrator will record a TR NO_X Annual allowance transfer by moving each TR NO_X Annual allowance from the transferor account to the transferee account as specified in the transfer.

(b) A TR NO_X Annual allowance transfer to or from a compliance account that is submitted for recordation after the allowance transfer deadline for a control period and that includes any TR NO_X Annual allowances allocated for any control period before such allowance transfer deadline will not be recorded until after the Administrator completes the deductions from such compliance account under § 97.424 for the control period immediately before such allowance transfer deadline.

(c) Where a TR NO_X Annual allowance transfer is not correctly submitted under § 97.422, the Administrator will not record such transfer.

(d) Within 5 business days of recordation of a TR NO_X Annual allowance transfer under paragraphs (a) and (b) of the section, the Administrator will notify the authorized account representatives of both the transferor and transferee accounts.

(e) Within 10 business days of receipt of a TR NO_X Annual allowance transfer that is not correctly submitted under § 97.422, the Administrator will notify the authorized account representatives of both accounts subject to the transfer of:

(1) A decision not to record the transfer, and

(2) The reasons for such non-recordation.

§ 97.424 Compliance with TR NO_X Annual emissions limitation.

(a) *Availability for deduction for compliance.* TR NO_X Annual allowances are available to be deducted for compliance with a source's TR NO_X Annual emissions limitation for a control period in a given year only if the TR NO_X Annual allowances:

(1) Were allocated for such control period or a control period in a prior year; and

(2) Are held in the source's compliance account as of the allowance transfer deadline for such control period.

(b) *Deductions for compliance.* After the recordation, in accordance with § 97.423, of TR NO_X Annual allowance transfers submitted by the allowance transfer deadline for a control period in a given year, the Administrator will deduct from each source's compliance account TR NO_X Annual allowances available under paragraph (a) of this section in order to determine whether the source meets the TR NO_X Annual emissions limitation for such control period, as follows:

(1) Until the amount of TR NO_X Annual allowances deducted equals the number of tons of total NO_X emissions from all TR NO_X Annual units at the source for such control period; or

(2) If there are insufficient TR NO_X Annual allowances to complete the deductions in paragraph (b)(1) of this section, until no more TR NO_X Annual allowances available under paragraph (a) of this section remain in the compliance account.

(c)(1) *Identification of TR NO_X Annual allowances by serial number.* The authorized account representative for a source's compliance account may request that specific TR NO_X Annual allowances, identified by serial number, in the compliance account be deducted for emissions or excess emissions for a control period in a given year in accordance with paragraph (b) or (d) of this section. In order to be complete, such request shall be submitted to the Administrator by the allowance transfer deadline for such control period and include, in a format prescribed by the Administrator, the identification of the TR NO_X Annual source and the appropriate serial numbers.

(2) *First-in, first-out.* The Administrator will deduct TR NO_X Annual allowances under paragraph (b) or (d) of this section from the source's compliance account in accordance with a complete request under paragraph (c)(1) of this section or, in the absence of such request or in the case of identification of an insufficient amount of TR NO_X Annual allowances in such request, on a first-in, first-out accounting basis in the following order:

(i) Any TR NO_X Annual allowances that were allocated to the units at the source and not transferred out of the compliance account, in the order of recordation; and then

(ii) Any TR NO_X Annual allowances that were allocated to any unit and transferred to and recorded in the compliance account pursuant to this subpart, in the order of recordation.

(d) *Deductions for excess emissions.* After making the deductions for compliance under paragraph (b) of this section for a control period in a year in which the TR NO_X Annual source has excess emissions, the Administrator will deduct from the source's compliance account an amount of TR NO_X Annual allowances, allocated for a control period in a prior year or the control period in the year of the excess emissions or in the immediately following year, equal to two times the number of tons of the source's excess emissions.

(e) *Recordation of deductions.* The Administrator will record in the appropriate compliance account all deductions from such an account under paragraphs (b) and (d) of this section.

§ 97.425 Compliance with TR NO_X Annual assurance provisions.

(a) *Availability for deduction.* TR NO_X Annual allowances are available to be deducted for compliance with the TR NO_X Annual assurance provisions for a control period in a given year by the owners and operators of a group of one or more TR NO_X Annual sources and units in a State (and Indian country within the borders of such State) only if the TR NO_X Annual allowances:

(1) Were allocated for a control period in a prior year or the control period in the given year or in the immediately following year; and

(2) Are held in the assurance account, established by the Administrator for such owners and operators of such group of TR NO_X Annual sources and units in such State (and Indian country within the borders of such State) under paragraph (b)(3) of this section, as of the deadline established in paragraph (b)(4) of this section.

(b) *Deductions for compliance.* The Administrator will deduct TR NO_X Annual allowances available under paragraph (a) of this section for compliance with the TR NO_X Annual assurance provisions for a State for a control period in a given year in accordance with the following procedures:

(1) By June 1, 2013 and June 1 of each year thereafter, the Administrator will:

(i) Calculate, for each State (and Indian country within the borders of such State), the total NO_X emissions from all TR NO_X Annual units at TR NO_X Annual sources in the State (and Indian country within the borders of such State) during the control period in the year before the year of this calculation deadline and the amount, if any, by which such total NO_X emissions exceed the State assurance level as described in § 97.406(c)(2)(iii); and

(ii) Promulgate a notice of data availability of the results of the calculations required in paragraph (b)(1)(i) of this section, including separate calculations of the NO_X emissions from each TR NO_X Annual source.

(2) For each notice of data availability required in paragraph (b)(1)(ii) of this section and for any State (and Indian country within the borders of such State) identified in such notice as having TR NO_X Annual units with total NO_X emissions exceeding the State assurance level for a control period in a given year, as described in § 97.406(c)(2)(iii):

(i) By July 1 immediately after the promulgation of such notice, the designated representative of each TR NO_X Annual source in each such State (and Indian country within the borders of such State) shall submit a statement, in a format prescribed by the Administrator, providing for each TR NO_X Annual unit (if any) at the source that operates during, but is not allocated an amount of TR NO_X Annual allowances for, such control period, the unit's allowable NO_X emission rate for such control period and, if such rate is expressed in lb per mmBtu, the unit's heat rate.

(ii) By August 1 immediately after the promulgation of such notice, the Administrator will calculate, for each such State (and Indian country within the borders of such State) and such control period and each common designated representative for such control period for a group of one or more TR NO_X Annual sources and units in the State (and Indian country within the borders of such State), the common designated representative's share of the total NO_X emissions from all TR NO_X Annual units at TR NO_X Annual sources in the State (and Indian country within the borders of such State), the common designated representative's assurance level, and the amount (if any) of TR NO_X Annual allowances that the owners and operators of such group of sources and units must hold in accordance with the calculation formula in § 97.406(c)(2)(i) and will promulgate a notice of data availability of the results of these calculations.

(iii) The Administrator will provide an opportunity for submission of objections to the calculations referenced by the notice of data availability required in paragraph (b)(2)(ii) of this section and the calculations referenced by the relevant notice of data availability required in paragraph (b)(1)(i) of this section.

(A) Objections shall be submitted by the deadline specified in such notice

and shall be limited to addressing whether the calculations referenced in the relevant notice required under paragraph (b)(1)(ii) of this section and referenced in the notice required under paragraph (b)(2)(ii) of this section are in accordance with § 97.406(c)(2)(iii), §§ 97.406(b) and 97.430 through 97.435, the definitions of ''common designated representative'', ''common designated representative's assurance level'', and ''common designated representative's share'' in § 97.402, and the calculation formula in § 97.406(c)(2)(i).

(B) The Administrator will adjust the calculations to the extent necessary to ensure that they are in accordance with the provisions referenced in paragraph (b)(2)(iii)(A) of this section. By October 1 immediately after the promulgation of such notice, the Administrator will promulgate a notice of data availability of any adjustments that the Administrator determines to be necessary and the reasons for accepting or rejecting any objections submitted in accordance with paragraph (b)(2)(iii)(A) of this section.

(3) For any State (and Indian country within the borders of such State) referenced in each notice of data availability required in paragraph (b)(2)(iii)(B) of this section as having TR NO_X Annual units with total NO_X emissions exceeding the State assurance level for a control period in a given year, the Administrator will establish one assurance account for each set of owners and operators referenced, in the notice of data availability required under paragraph (b)(2)(iii)(B) of this section, as all of the owners and operators of a group of TR NO_X Annual sources and units in the State (and Indian country within the borders of such State) having a common designated representative for such control period and as being required to hold TR NO_X Annual allowances.

(4)(i) As of midnight of November 1 immediately after the promulgation of each notice of data availability required in paragraph (b)(2)(iii)(B) of this section, the owners and operators described in paragraph (b)(3) of this section shall hold in the assurance account established for the them and for the appropriate TR NO_X Annual sources, TR NO_X Annual units, and State (and Indian country within the borders of such State) under paragraph (b)(3) of this section a total amount of TR NO_X Annual allowances, available for deduction under paragraph (a) of this section, equal to the amount such owners and operators are required to hold with regard to such sources, units and State (and Indian country within the borders of such State) as calculated by the Administrator and referenced in such notice.

(ii) Notwithstanding the allowance-holding deadline specified in paragraph (b)(4)(i) of this section, if November 1 is not a business day, then such allowance-holding deadline shall be midnight of the first business day thereafter.

(5) After November 1 (or the date described in paragraph (b)(4)(ii) of this section) immediately after the promulgation of each notice of data availability required in paragraph (b)(2)(iii)(B) of this section and after the recordation, in accordance with § 97.423, of TR NO_X Annual allowance transfers submitted by midnight of such date, the Administrator will determine whether the owners and operators described in paragraph (b)(3) of this section hold, in the assurance account for the appropriate TR NO_X Annual sources, TR NO_X Annual units, and State (and Indian country within the borders of such State) established under paragraph (b)(3) of this section, the amount of TR NO_X Annual allowances available under paragraph (a) of this section that the owners and operators are required to hold with regard to such sources, units, and State (and Indian country within the borders of such State) as calculated by the Administrator and referenced in the notice required in paragraph (b)(2)(iii)(B) of this section.

(6) Notwithstanding any other provision of this subpart and any revision, made by or submitted to the Administrator after the promulgation of the notice of data availability required in paragraph (b)(2)(iii)(B) of this section for a control period in a given year, of any data used in making the calculations referenced in such notice, the amounts of TR NO_X Annual allowances that the owners and operators are required to hold in accordance with § 97.406(c)(2)(i) for such control period shall continue to be such amounts as calculated by the Administrator and referenced in such notice required in paragraph (b)(2)(iii)(B) of this section, except as follows:

(i) If any such data are revised by the Administrator as a result of a decision in or settlement of litigation concerning such data on appeal under part 78 of this chapter of such notice, or on appeal under section 307 of the Clean Air Act of a decision rendered under part 78 of this chapter on appeal of such notice, then the Administrator will use the data as so revised to recalculate the amounts of TR NO_X Annual allowances that owners and operators are required to hold in accordance with the calculation formula in § 97.406(c)(2)(i) for such control period with regard to the TR NO_X Annual sources, TR NO_X Annual units, and State (and Indian country within the borders of such State) involved, provided that such litigation under part 78 of this chapter, or the proceeding under part 78 of this chapter that resulted in the decision appealed in such litigation under section 307 of the Clean Air Act, was initiated no later than 30 days after promulgation of such notice required in paragraph (b)(2)(iii)(B) of this section.

(ii) If any such data are revised by the owners and operators of a TR NO_X Annual source and TR NO_X Annual unit whose designated representative submitted such data under paragraph (b)(2)(i) of this section, as a result of a decision in or settlement of litigation concerning such submission, then the Administrator will use the data as so revised to recalculate the amounts of TR NO_X Annual allowances that owners and operators are required to hold in accordance with the calculation formula in § 97.406(c)(2)(i) for such control period with regard to the TR NO_X Annual sources, TR NO_X Annual units, and State (and Indian country within the borders of such State) involved, provided that such litigation was initiated no later than 30 days after promulgation of such notice required in paragraph (b)(2)(iii)(B) of this section.

(iii) If the revised data are used to recalculate, in accordance with paragraphs (b)(6)(i) and (ii) of this section, the amount of TR NO_X Annual allowances that the owners and operators are required to hold for such control period with regard to the TR NO_X Annual sources, TR NO_X Annual units, and State (and Indian country within the borders of such State) involved—

(A) Where the amount of TR NO_X Annual allowances that the owners and operators are required to hold increases as a result of the use of all such revised data, the Administrator will establish a new, reasonable deadline on which the owners and operators shall hold the additional amount of TR NO_X Annual allowances in the assurance account established by the Administrator for the appropriate TR NO_X Annual sources, TR NO_X Annual units, and State (and Indian country within the borders of such State) under paragraph (b)(3) of this section. The owners' and operators' failure to hold such additional amount, as required, before the new deadline shall not be a violation of the Clean Air Act. The owners' and operators' failure to hold such additional amount, as required, as of the new deadline shall be a violation of the Clean Air Act. Each

TR NO_X Annual allowance that the owners and operators fail to hold as required as of the new deadline, and each day in such control period, shall be a separate violation of the Clean Air Act.

(B) For the owners and operators for which the amount of TR NO_X Annual allowances required to be held decreases as a result of the use of all such revised data, the Administrator will record, in all accounts from which TR NO_X Annual allowances were transferred by such owners and operators for such control period to the assurance account established by the Administrator for the appropriate at TR NO_X Annual sources, TR NO_X Annual units, and State (and Indian country within the borders of such State) under paragraph (b)(3) of this section, a total amount of the TR NO_X Annual allowances held in such assurance account equal to the amount of the decrease. If TR NO_X Annual allowances were transferred to such assurance account from more than one account, the amount of TR NO_X Annual allowances recorded in each such transferor account will be in proportion to the percentage of the total amount of TR NO_X Annual allowances transferred to such assurance account for such control period from such transferor account.

(C) Each TR NO_X Annual allowance held under paragraph (b)(6)(iii)(A) of this section as a result of recalculation of requirements under the TR NO_X Annual assurance provisions for such control period must be a TR NO_X Annual allowance allocated for a control period in a year before or the year immediately following, or in the same year as, the year of such control period.

§ 97.426 Banking.

(a) A TR NO_X Annual allowance may be banked for future use or transfer in a compliance account or a general account in accordance with paragraph (b) of this section.

(b) Any TR NO_X Annual allowance that is held in a compliance account or a general account will remain in such account unless and until the TR NO_X Annual allowance is deducted or transferred under § 97.411(c), § 97.423, § 97.424, § 97.425, 97.427, or 97.428.

§ 97.427 Account error.

The Administrator may, at his or her sole discretion and on his or her own motion, correct any error in any Allowance Management System account. Within 10 business days of making such correction, the Administrator will notify the authorized account representative for the account.

§ 97.428 Administrator's action on submissions.

(a) The Administrator may review and conduct independent audits concerning any submission under the TR NO_X Annual Trading Program and make appropriate adjustments of the information in the submission.

(b) The Administrator may deduct TR NO_X Annual allowances from or transfer TR NO_X Annual allowances to a compliance account or an assurance account, based on the information in a submission, as adjusted under paragraph (a)(1) of this section, and record such deductions and transfers.

§ 97.429 [Reserved]

§ 97.430 General monitoring, recordkeeping, and reporting requirements.

The owners and operators, and to the extent applicable, the designated representative, of a TR NO_X Annual unit, shall comply with the monitoring, recordkeeping, and reporting requirements as provided in this subpart and subpart H of part 75 of this chapter. For purposes of applying such requirements, the definitions in § 97.402 and in § 72.2 of this chapter shall apply, the terms ''affected unit,'' ''designated representative,'' and ''continuous emission monitoring system'' (or ''CEMS'') in part 75 of this chapter shall be deemed to refer to the terms ''TR NO_X Annual unit,'' ''designated representative,'' and ''continuous emission monitoring system'' (or ''CEMS'') respectively as defined in § 97.402, and the term ''newly affected unit'' shall be deemed to mean ''newly affected TR NO_X Annual unit''. The owner or operator of a unit that is not a TR NO_X Annual unit but that is monitored under § 75.72(b)(2)(ii) of this chapter shall comply with the same monitoring, recordkeeping, and reporting requirements as a TR NO_X Annual unit.

(a) *Requirements for installation, certification, and data accounting.* The owner or operator of each TR NO_X Annual unit shall:

(1) Install all monitoring systems required under this subpart for monitoring NO_X mass emissions and individual unit heat input (including all systems required to monitor NO_X emission rate, NO_X concentration, stack gas moisture content, stack gas flow rate, CO_2 or O_2 concentration, and fuel flow rate, as applicable, in accordance with §§ 75.71 and 75.72 of this chapter);

(2) Successfully complete all certification tests required under § 97.431 and meet all other requirements of this subpart and part 75 of this chapter applicable to the monitoring systems under paragraph (a)(1) of this section; and

(3) Record, report, and quality-assure the data from the monitoring systems under paragraph (a)(1) of this section.

(b) *Compliance deadlines.* Except as provided in paragraph (e) of this section, the owner or operator shall meet the monitoring system certification and other requirements of paragraphs (a)(1) and (2) of this section on or before the following dates and shall record, report, and quality-assure the data from the monitoring systems under paragraph (a)(1) of this section on and after the following dates.

(1) For the owner or operator of a TR NO_X Annual unit that commences commercial operation before July 1, 2011, January 1, 2012;

(2) For the owner or operator of a TR NO_X Annual unit that commences commercial operation on or after July 1, 2011, the later of the following:

(i) January 1, 2012; or

(ii) 180 calendar days after the date on which the unit commences commercial operation;

(3) The owner or operator of a TR NO_X Annual unit for which construction of a new stack or flue or installation of add-on NO_X emission controls is completed after the applicable deadline under paragraph (b)(1) or (2) of this section shall meet the requirements of §§ 75.4(e)(1) through (e)(4) of this chapter, except that:

(i) Such requirements shall apply to the monitoring systems required under § 97.430 through § 97.435, rather than the monitoring systems required under part 75 of this chapter;

(ii) NO_X emission rate, NO_X concentration, stack gas moisture content, stack gas volumetric flow rate, and O_2 or CO_2 concentration data shall be determined and reported, rather than the data listed in § 75.4(e)(2) of this chapter; and

(iii) Any petition for another procedure under § 75.4(e)(2) of this chapter shall be submitted under § 97.435, rather than § 75.66.

(c) *Reporting data.* The owner or operator of a TR NO_X Annual unit that does not meet the applicable compliance date set forth in paragraph (b) of this section for any monitoring system under paragraph (a)(1) of this section shall, for each such monitoring system, determine, record, and report maximum potential (or, as appropriate, minimum potential) values for NO_X concentration, NO_X emission rate, stack gas flow rate, stack gas moisture content, fuel flow rate, and any other parameters required to determine NO_X mass emissions and heat input in accordance with § 75.31(b)(2) or (c)(3) of

this chapter, section 2.4 of appendix D to part 75 of this chapter, or section 2.5 of appendix E to part 75 of this chapter, as applicable.

(d) *Prohibitions.* (1) No owner or operator of a TR NO_X Annual unit shall use any alternative monitoring system, alternative reference method, or any other alternative to any requirement of this subpart without having obtained prior written approval in accordance with § 97.435.

(2) No owner or operator of a TR NO_X Annual unit shall operate the unit so as to discharge, or allow to be discharged, NO_X to the atmosphere without accounting for all such NO_X in accordance with the applicable provisions of this subpart and part 75 of this chapter.

(3) No owner or operator of a TR NO_X Annual unit shall disrupt the continuous emission monitoring system, any portion thereof, or any other approved emission monitoring method, and thereby avoid monitoring and recording NO_X mass discharged into the atmosphere or heat input, except for periods of recertification or periods when calibration, quality assurance testing, or maintenance is performed in accordance with the applicable provisions of this subpart and part 75 of this chapter.

(4) No owner or operator of a TR NO_X Annual unit shall retire or permanently discontinue use of the continuous emission monitoring system, any component thereof, or any other approved monitoring system under this subpart, except under any one of the following circumstances:

(i) During the period that the unit is covered by an exemption under § 97.405 that is in effect;

(ii) The owner or operator is monitoring emissions from the unit with another certified monitoring system approved, in accordance with the applicable provisions of this subpart and part 75 of this chapter, by the Administrator for use at that unit that provides emission data for the same pollutant or parameter as the retired or discontinued monitoring system; or

(iii) The designated representative submits notification of the date of certification testing of a replacement monitoring system for the retired or discontinued monitoring system in accordance with § 97.431(d)(3)(i).

(e) *Long-term cold storage.* The owner or operator of a TR NO_X Annual unit is subject to the applicable provisions of § 75.4(d) of this chapter concerning units in long-term cold storage.

§ 97.431 Initial monitoring system certification and recertification procedures.

(a) The owner or operator of a TR NO_X Annual unit shall be exempt from the initial certification requirements of this section for a monitoring system under § 97.430(a)(1) if the following conditions are met:

(1) The monitoring system has been previously certified in accordance with part 75 of this chapter; and

(2) The applicable quality-assurance and quality-control requirements of § 75.21 of this chapter and appendices B, D, and E to part 75 of this chapter are fully met for the certified monitoring system described in paragraph (a)(1) of this section.

(b) The recertification provisions of this section shall apply to a monitoring system under § 97.430(a)(1) that is exempt from initial certification requirements under paragraph (a) of this section.

(c) If the Administrator has previously approved a petition under § 75.17(a) or (b) of this chapter for apportioning the NO_X emission rate measured in a common stack or a petition under § 75.66 of this chapter for an alternative to a requirement in § 75.12 or § 75.17 of this chapter, the designated representative shall resubmit the petition to the Administrator under § 97.435 to determine whether the approval applies under the TR NO_X Annual Trading Program.

(d) Except as provided in paragraph (a) of this section, the owner or operator of a TR NO_X Annual unit shall comply with the following initial certification and recertification procedures for a continuous monitoring system (*i.e.,* a continuous emission monitoring system and an excepted monitoring system under appendices D and E to part 75 of this chapter) under § 97.430(a)(1). The owner or operator of a unit that qualifies to use the low mass emissions excepted monitoring methodology under § 75.19 of this chapter or that qualifies to use an alternative monitoring system under subpart E of part 75 of this chapter shall comply with the procedures in paragraph (e) or (f) of this section respectively.

(1) Requirements for initial certification. The owner or operator shall ensure that each continuous monitoring system under § 97.430(a)(1) (including the automated data acquisition and handling system) successfully completes all of the initial certification testing required under § 75.20 of this chapter by the applicable deadline in § 97.430(b). In addition, whenever the owner or operator installs a monitoring system to meet the requirements of this subpart in a location where no such monitoring system was previously installed, initial certification in accordance with § 75.20 of this chapter is required.

(2) Requirements for recertification. Whenever the owner or operator makes a replacement, modification, or change in any certified continuous emission monitoring system under § 97.430(a)(1) that may significantly affect the ability of the system to accurately measure or record NO_X mass emissions or heat input rate or to meet the quality-assurance and quality-control requirements of § 75.21 of this chapter or appendix B to part 75 of this chapter, the owner or operator shall recertify the monitoring system in accordance with § 75.20(b) of this chapter. Furthermore, whenever the owner or operator makes a replacement, modification, or change to the flue gas handling system or the unit's operation that may significantly change the stack flow or concentration profile, the owner or operator shall recertify each continuous emission monitoring system whose accuracy is potentially affected by the change, in accordance with § 75.20(b) of this chapter. Examples of changes to a continuous emission monitoring system that require recertification include replacement of the analyzer, complete replacement of an existing continuous emission monitoring system, or change in location or orientation of the sampling probe or site. Any fuel flowmeter system, and any excepted NO_X monitoring system under appendix E to part 75 of this chapter, under § 97.430(a)(1) are subject to the recertification requirements in § 75.20(g)(6) of this chapter.

(3) Approval process for initial certification and recertification. For initial certification of a continuous monitoring system under § 97.430(a)(1), paragraphs (d)(3)(i) through (v) of this section apply. For recertifications of such monitoring systems, paragraphs (d)(3)(i) through (iv) of this section and the procedures in §§ 75.20(b)(5) and (g)(7) of this chapter (in lieu of the procedures in paragraph (d)(3)(v) of this section) apply, provided that in applying paragraphs (d)(3)(i) through (iv) of this section, the words ''certification'' and ''initial certification'' are replaced by the word ''recertification'' and the word ''certified'' is replaced by with the word ''recertified''.

(i) Notification of certification. The designated representative shall submit to the appropriate EPA Regional Office and the Administrator written notice of the dates of certification testing, in accordance with § 97.433.

(ii) Certification application. The designated representative shall submit to the Administrator a certification application for each monitoring system. A complete certification application shall include the information specified in § 75.63 of this chapter.

(iii) Provisional certification date. The provisional certification date for a monitoring system shall be determined in accordance with § 75.20(a)(3) of this chapter. A provisionally certified monitoring system may be used under the TR NO_X Annual Trading Program for a period not to exceed 120 days after receipt by the Administrator of the complete certification application for the monitoring system under paragraph (d)(3)(ii) of this section. Data measured and recorded by the provisionally certified monitoring system, in accordance with the requirements of part 75 of this chapter, will be considered valid quality-assured data (retroactive to the date and time of provisional certification), provided that the Administrator does not invalidate the provisional certification by issuing a notice of disapproval within 120 days of the date of receipt of the complete certification application by the Administrator.

(iv) Certification application approval process. The Administrator will issue a written notice of approval or disapproval of the certification application to the owner or operator within 120 days of receipt of the complete certification application under paragraph (d)(3)(ii) of this section. In the event the Administrator does not issue such a notice within such 120-day period, each monitoring system that meets the applicable performance requirements of part 75 of this chapter and is included in the certification application will be deemed certified for use under the TR NO_X Annual Trading Program.

(A) Approval notice. If the certification application is complete and shows that each monitoring system meets the applicable performance requirements of part 75 of this chapter, then the Administrator will issue a written notice of approval of the certification application within 120 days of receipt.

(B) Incomplete application notice. If the certification application is not complete, then the Administrator will issue a written notice of incompleteness that sets a reasonable date by which the designated representative must submit the additional information required to complete the certification application. If the designated representative does not comply with the notice of incompleteness by the specified date, then the Administrator may issue a notice of disapproval under paragraph (d)(3)(iv)(C) of this section.

(C) Disapproval notice. If the certification application shows that any monitoring system does not meet the performance requirements of part 75 of this chapter or if the certification application is incomplete and the requirement for disapproval under paragraph (d)(3)(iv)(B) of this section is met, then the Administrator will issue a written notice of disapproval of the certification application. Upon issuance of such notice of disapproval, the provisional certification is invalidated by the Administrator and the data measured and recorded by each uncertified monitoring system shall not be considered valid quality-assured data beginning with the date and hour of provisional certification (as defined under § 75.20(a)(3) of this chapter).

(D) Audit decertification. The Administrator may issue a notice of disapproval of the certification status of a monitor in accordance with § 97.432(b).

(v) Procedures for loss of certification. If the Administrator issues a notice of disapproval of a certification application under paragraph (d)(3)(iv)(C) of this section or a notice of disapproval of certification status under paragraph (d)(3)(iv)(D) of this section, then:

(A) The owner or operator shall substitute the following values, for each disapproved monitoring system, for each hour of unit operation during the period of invalid data specified under § 75.20(a)(4)(iii), § 75.20(g)(7), or § 75.21(e) of this chapter and continuing until the applicable date and hour specified under § 75.20(a)(5)(i) or (g)(7) of this chapter:

(*1*) For a disapproved NO_X emission rate (*i.e.,* NO_X-diluent) system, the maximum potential NO_X emission rate, as defined in § 72.2 of this chapter.

(*2*) For a disapproved NO_X pollutant concentration monitor and disapproved flow monitor, respectively, the maximum potential concentration of NO_X and the maximum potential flow rate, as defined in sections 2.1.2.1 and 2.1.4.1 of appendix A to part 75 of this chapter.

(*3*) For a disapproved moisture monitoring system and disapproved diluent gas monitoring system, respectively, the minimum potential moisture percentage and either the maximum potential CO_2 concentration or the minimum potential O_2 concentration (as applicable), as defined in sections 2.1.5, 2.1.3.1, and 2.1.3.2 of appendix A to part 75 of this chapter.

(*4*) For a disapproved fuel flowmeter system, the maximum potential fuel flow rate, as defined in section 2.4.2.1 of appendix D to part 75 of this chapter.

(*5*) For a disapproved excepted NO_X monitoring system under appendix E to part 75 of this chapter, the fuel-specific maximum potential NO_X emission rate, as defined in § 72.2 of this chapter.

(B) The designated representative shall submit a notification of certification retest dates and a new certification application in accordance with paragraphs (d)(3)(i) and (ii) of this section.

(C) The owner or operator shall repeat all certification tests or other requirements that were failed by the monitoring system, as indicated in the Administrator's notice of disapproval, no later than 30 unit operating days after the date of issuance of the notice of disapproval.

(e) The owner or operator of a unit qualified to use the low mass emissions (LME) excepted methodology under § 75.19 of this chapter shall meet the applicable certification and recertification requirements in §§ 75.19(a)(2) and 75.20(h) of this chapter. If the owner or operator of such a unit elects to certify a fuel flowmeter system for heat input determination, the owner or operator shall also meet the certification and recertification requirements in § 75.20(g) of this chapter.

(f) The designated representative of each unit for which the owner or operator intends to use an alternative monitoring system approved by the Administrator under subpart E of part 75 of this chapter shall comply with the applicable notification and application procedures of § 75.20(f) of this chapter.

§ 97.432 Monitoring system out-of-control periods.

(a) *General provisions.* Whenever any monitoring system fails to meet the quality-assurance and quality-control requirements or data validation requirements of part 75 of this chapter, data shall be substituted using the applicable missing data procedures in subpart D or subpart H of, or appendix D or appendix E to, part 75 of this chapter.

(b) *Audit decertification.* Whenever both an audit of a monitoring system and a review of the initial certification or recertification application reveal that any monitoring system should not have been certified or recertified because it did not meet a particular performance specification or other requirement under § 97.431 or the applicable provisions of part 75 of this chapter, both at the time of the initial certification or

recertification application submission and at the time of the audit, the Administrator will issue a notice of disapproval of the certification status of such monitoring system. For the purposes of this paragraph, an audit shall be either a field audit or an audit of any information submitted to the Administrator or any State or permitting authority. By issuing the notice of disapproval, the Administrator revokes prospectively the certification status of the monitoring system. The data measured and recorded by the monitoring system shall not be considered valid quality-assured data from the date of issuance of the notification of the revoked certification status until the date and time that the owner or operator completes subsequently approved initial certification or recertification tests for the monitoring system. The owner or operator shall follow the applicable initial certification or recertification procedures in § 97.431 for each disapproved monitoring system.

§ 97.433 Notifications concerning monitoring.

The designated representative of a TR NO_X Annual unit shall submit written notice to the Administrator in accordance with § 75.61 of this chapter.

§ 97.434 Recordkeeping and reporting.

(a) *General provisions.* The designated representative shall comply with all recordkeeping and reporting requirements in paragraphs (b) through (e) of this section, the applicable recordkeeping and reporting requirements under § 75.73 of this chapter, and the requirements of § 97.414(a).

(b) *Monitoring plans.* The owner or operator of a TR NO_X Annual unit shall comply with requirements of § 75.73(c) and (e) of this chapter.

(c) *Certification applications.* The designated representative shall submit an application to the Administrator within 45 days after completing all initial certification or recertification tests required under § 97.431, including the information required under § 75.63 of this chapter.

(d) *Quarterly reports.* The designated representative shall submit quarterly reports, as follows:

(1) The designated representative shall report the NO_X mass emissions data and heat input data for the TR NO_X Annual unit, in an electronic quarterly report in a format prescribed by the Administrator, for each calendar quarter beginning with:

(i) For a unit that commences commercial operation before July 1, 2011, the calendar quarter covering January 1, 2012 through March 31, 2012; or

(ii) For a unit that commences commercial operation on or after July 1, 2011, the calendar quarter corresponding to the earlier of the date of provisional certification or the applicable deadline for initial certification under § 97.430(b), unless that quarter is the third or fourth quarter of 2011, in which case reporting shall commence in the quarter covering January 1, 2012 through March 31, 2012.

(2) The designated representative shall submit each quarterly report to the Administrator within 30 days after the end of the calendar quarter covered by the report. Quarterly reports shall be submitted in the manner specified in § 75.73(f) of this chapter.

(3) For TR NO_X Annual units that are also subject to the Acid Rain Program, TR NO_X Ozone Season Trading Program, TR SO_2 Group 1 Trading Program, or TR SO_2 Group 2 Trading Program, quarterly reports shall include the applicable data and information required by subparts F through H of part 75 of this chapter as applicable, in addition to the NO_X mass emission data, heat input data, and other information required by this subpart.

(4) The Administrator may review and conduct independent audits of any quarterly report in order to determine whether the quarterly report meets the requirements of this subpart and part 75 of this chapter, including the requirement to use substitute data.

(i) The Administrator will notify the designated representative of any determination that the quarterly report fails to meet any such requirements and specify in such notification any corrections that the Administrator believes are necessary to make through resubmission of the quarterly report and a reasonable time period within which the designated representative must respond. Upon request by the designated representative, the Administrator may specify reasonable extensions of such time period. Within the time period (including any such extensions) specified by the Administrator, the designated representative shall resubmit the quarterly report with the corrections specified by the Administrator, except to the extent the designated representative provides information demonstrating that a specified correction is not necessary because the quarterly report already meets the requirements of this subpart and part 75 of this chapter that are relevant to the specified correction.

(ii) Any resubmission of a quarterly report shall meet the requirements applicable to the submission of a quarterly report under this subpart and part 75 of this chapter, except for the deadline set forth in paragraph (d)(2) of this section.

(e) *Compliance certification.* The designated representative shall submit to the Administrator a compliance certification (in a format prescribed by the Administrator) in support of each quarterly report based on reasonable inquiry of those persons with primary responsibility for ensuring that all of the unit's emissions are correctly and fully monitored. The certification shall state that:

(1) The monitoring data submitted were recorded in accordance with the applicable requirements of this subpart and part 75 of this chapter, including the quality assurance procedures and specifications; and

(2) For a unit with add-on NO_X emission controls and for all hours where NO_X data are substituted in accordance with § 75.34(a)(1) of this chapter, the add-on emission controls were operating within the range of parameters listed in the quality assurance/quality control program under appendix B to part 75 of this chapter and the substitute data values do not systematically underestimate NO_X emissions.

§ 97.435 Petitions for alternatives to monitoring, recordkeeping, or reporting requirements.

(a) The designated representative of a TR NO_X Annual unit may submit a petition under § 75.66 of this chapter to the Administrator, requesting approval to apply an alternative to any requirement of §§ 97.430 through 97.434.

(b) A petition submitted under paragraph (a) of this section shall include sufficient information for the evaluation of the petition, including, at a minimum, the following information:

(i) Identification of each unit and source covered by the petition;

(ii) A detailed explanation of why the proposed alternative is being suggested in lieu of the requirement;

(iii) A description and diagram of any equipment and procedures used in the proposed alternative;

(iv) A demonstration that the proposed alternative is consistent with the purposes of the requirement for which the alternative is proposed and with the purposes of this subpart and part 75 of this chapter and that any adverse effect of approving the alternative will be *de minimis;* and

(v) Any other relevant information that the Administrator may require.

(c) Use of an alternative to any requirement referenced in paragraph (a) of this section is in accordance with this subpart only to the extent that the petition is approved in writing by the Administrator and that such use is in accordance with such approval.

■ 75. Part 97 is amended by adding subpart BBBBB to read as follows:

Subpart BBBBB—TR NO_X Ozone Season Trading Program

97.501 Purpose.
97.502 Definitions.
97.503 Measurements, abbreviations, and acronyms.
97.504 Applicability.
97.505 Retired unit exemption.
97.506 Standard requirements.
97.507 Computation of time.
97.508 Administrative appeal procedures.
97.509 [Reserved]
97.510 State NO_X Ozone Season trading budgets, new unit set-asides, Indian country new unit set-asides and variability limits.
97.511 Timing requirements for TR NO_X Ozone Season allowance allocations.
97.512 TR NO_X Ozone Season allowance allocations to new units.
97.513 Authorization of designated representative and alternate designated representative.
97.514 Responsibilities of designated representative and alternate designated representative.
97.515 Changing designated representative and alternate designated representative; changes in owners and operators.
97.516 Certificate of representation.
97.517 Objections concerning designated representative and alternate designated representative.
97.518 Delegation by designated representative and alternate designated representative.
97.519 [Reserved]
97.520 Establishment of compliance accounts and general accounts.
97.521 Recordation of TR NO_X Ozone Season allowance allocations.
97.522 Submission of TR NO_X Ozone Season allowance transfers.
97.523 Recordation of TR NO_X Ozone Season allowance transfers.
97.524 Compliance with TR NO_X Ozone Season emissions limitation.
97.525 Compliance with TR NO_X Ozone Season assurance provisions.
97.526 Banking.
97.527 Account error.
97.528 Administrator's action on submissions.
97.529 [RESERVED]
97.530 General monitoring, recordkeeping, and reporting requirements.
97.531 Initial monitoring system certification and recertification procedures.
97.532 Monitoring system out-of-control periods.
97.533 Notifications concerning monitoring.
97.534 Recordkeeping and reporting.
97.535 Petitions for alternatives to monitoring, recordkeeping, or reporting requirements.

Subpart BBBBB—TR NO_X Ozone Season Trading Program

§ 97.501 Purpose.

This subpart sets forth the general, designated representative, allowance, and monitoring provisions for the Transport Rule (TR) NO_X Ozone Season Trading Program, under section 110 of the Clean Air Act and § 52.38 of this chapter, as a means of mitigating interstate transport of ozone and nitrogen oxides.

§ 97.502 Definitions.

The terms used in this subpart shall have the meanings set forth in this section as follows:

Acid Rain Program means a multi-state SO_2 and NO_X air pollution control and emission reduction program established by the Administrator under title IV of the Clean Air Act and parts 72 through 78 of this chapter.

Administrator means the Administrator of the United States Environmental Protection Agency or the Director of the Clean Air Markets Division (or its successor determined by the Administrator) of the United States Environmental Protection Agency, the Administrator's duly authorized representative under this subpart.

Allocate or *allocation* means, with regard to TR NO_X Ozone Season allowances, the determination by the Administrator, State, or permitting authority, in accordance with this subpart and any SIP revision submitted by the State and approved by the Administrator under § 52.38(b)(3), (4), or (5) of this chapter, of the amount of such TR NO_X Ozone Season allowances to be initially credited, at no cost to the recipient, to:

(1) A TR NO_X Ozone Season unit;

(2) A new unit set-aside;

(3) An Indian country new unit set-aside; or

(4) An entity not listed in paragraphs (1) through (3) of this definition;

(5) Provided that, if the Administrator, State, or permitting authority initially credits, to a TR NO_X Ozone Season unit qualifying for an initial credit, a credit in the amount of zero TR NO_X Ozone Season allowances, the TR NO_X Ozone Season unit will be treated as being allocated an amount (*i.e.,* zero) of TR NO_X Ozone Season allowances.

Allowable NO_X emission rate means, for a unit, the most stringent State or federal NO_X emission rate limit (in lb/MWhr or, if in lb/mmBtu, converted to lb/MWhr by multiplying it by the unit's heat rate in mmBtu/MWhr) that is applicable to the unit and covers the longest averaging period not exceeding one year.

Allowance Management System means the system by which the Administrator records allocations, deductions, and transfers of TR NO_X Ozone Season allowances under the TR NO_X Ozone Season Trading Program. Such allowances are allocated, recorded, held, deducted, or transferred only as whole allowances.

Allowance Management System account means an account in the Allowance Management System established by the Administrator for purposes of recording the allocation, holding, transfer, or deduction of TR NO_X Ozone Season allowances.

Allowance transfer deadline means, for a control period in a given year, midnight of December 1 (if it is a business day), or midnight of the first business day thereafter (if December 1 is not a business day), immediately after such control period and is the deadline by which a TR NO_X Ozone Season allowance transfer must be submitted for recordation in a TR NO_X Ozone Season source's compliance account in order to be available for use in complying with the source's TR NO_X Ozone Season emissions limitation for such control period in accordance with §§ 97.506 and 97.524.

Alternate designated representative means, for a TR NO_X Ozone Season source and each TR NO_X Ozone Season unit at the source, the natural person who is authorized by the owners and operators of the source and all such units at the source, in accordance with this subpart, to act on behalf of the designated representative in matters pertaining to the TR NO_X Ozone Season Trading Program. If the TR NO_X Ozone Season source is also subject to the Acid Rain Program, TR NO_X Annual Trading Program, TR SO_2 Group 1 Trading Program, or TR SO_2 Group 2 Trading Program, then this natural person shall be the same natural person as the alternate designated representative, as defined in the respective program.

Assurance account means an Allowance Management System account, established by the Administrator under § 97.525(b)(3) for certain owners and operators of a group of one or more TR NO_X Ozone Season sources and units in a given State (and Indian country within the borders of such State), in which are held TR NO_X Ozone Season allowances available for use for a control period in a given year in complying with the TR NO_X Ozone

Season assurance provisions in accordance with §§ 97.506 and 97.525.

Authorized account representative means, for a general account, the natural person who is authorized, in accordance with this subpart, to transfer and otherwise dispose of TR NO_X Ozone Season allowances held in the general account and, for a TR NO_X Ozone Season source's compliance account, the designated representative of the source.

Automated data acquisition and handling system or *DAHS* means the component of the continuous emission monitoring system, or other emissions monitoring system approved for use under this subpart, designed to interpret and convert individual output signals from pollutant concentration monitors, flow monitors, diluent gas monitors, and other component parts of the monitoring system to produce a continuous record of the measured parameters in the measurement units required by this subpart.

Biomass means—

(1) Any organic material grown for the purpose of being converted to energy;

(2) Any organic byproduct of agriculture that can be converted into energy; or

(3) Any material that can be converted into energy and is nonmerchantable for other purposes, that is segregated from other material that is nonmerchantable for other purposes, and that is;

(i) A forest-related organic resource, including mill residues, precommercial thinnings, slash, brush, or byproduct from conversion of trees to merchantable material; or

(ii) A wood material, including pallets, crates, dunnage, manufacturing and construction materials (other than pressure-treated, chemically-treated, or painted wood products), and landscape or right-of-way tree trimmings.

Boiler means an enclosed fossil- or other-fuel-fired combustion device used to produce heat and to transfer heat to recirculating water, steam, or other medium.

Bottoming-cycle unit means a unit in which the energy input to the unit is first used to produce useful thermal energy, where at least some of the reject heat from the useful thermal energy application or process is then used for electricity production.

Business day means a day that does not fall on a weekend or a federal holiday.

Certifying official means a natural person who is:

(1) For a corporation, a president, secretary, treasurer, or vice-president of the corporation in charge of a principal business function or any other person who performs similar policy- or decision-making functions for the corporation;

(2) For a partnership or sole proprietorship, a general partner or the proprietor respectively; or

(3) For a local government entity or State, federal, or other public agency, a principal executive officer or ranking elected official.

Clean Air Act means the Clean Air Act, 42 U.S.C. 7401, *et seq.*

Coal means ''coal'' as defined in § 72.2 of this chapter.

Coal-derived fuel means any fuel (whether in a solid, liquid, or gaseous state) produced by the mechanical, thermal, or chemical processing of coal.

Cogeneration system means an integrated group, at a source, of equipment (including a boiler, or combustion turbine, and a steam turbine generator) designed to produce useful thermal energy for industrial, commercial, heating, or cooling purposes and electricity through the sequential use of energy.

Cogeneration unit means a stationary, fossil-fuel-fired boiler or stationary, fossil-fuel-fired combustion turbine that is a topping-cycle unit or a bottoming-cycle unit:

(1) Operating as part of a cogeneration system; and

(2) Producing on an annual average basis—

(i) For a topping-cycle unit,

(A) Useful thermal energy not less than 5 percent of total energy output; and

(B) Useful power that, when added to one-half of useful thermal energy produced, is not less than 42.5 percent of total energy input, if useful thermal energy produced is 15 percent or more of total energy output, or not less than 45 percent of total energy input, if useful thermal energy produced is less than 15 percent of total energy output.

(ii) For a bottoming-cycle unit, useful power not less than 45 percent of total energy input;

(3) Provided that the requirements in paragraph (2) of this definition shall not apply to a calendar year referenced in paragraph (2) of this definition during which the unit did not operate at all;

(4) Provided that the total energy input under paragraphs (2)(i)(B) and (2)(ii) of this definition shall equal the unit's total energy input from all fuel, except biomass if the unit is a boiler; and

(5) Provided that, if, throughout its operation during the 12-month period or a calendar year referenced in paragraph (2) of this definition, a unit is operated as part of a cogeneration system and the cogeneration system meets on a system-wide basis the requirement in paragraph (2)(i)(B) or (2)(ii) of this definition, the unit shall be deemed to meet such requirement during that 12-month period or calendar year.

Combustion turbine means an enclosed device comprising:

(1) If the device is simple cycle, a compressor, a combustor, and a turbine and in which the flue gas resulting from the combustion of fuel in the combustor passes through the turbine, rotating the turbine; and

(2) If the device is combined cycle, the equipment described in paragraph (1) of this definition and any associated duct burner, heat recovery steam generator, and steam turbine.

Commence commercial operation means, with regard to a unit:

(1) To have begun to produce steam, gas, or other heated medium used to generate electricity for sale or use, including test generation, except as provided in § 97.505.

(i) For a unit that is a TR NO_X Ozone Season unit under § 97.504 on the later of January 1, 2005 or the date the unit commences commercial operation as defined in the introductory text of paragraph (1) of this definition and that subsequently undergoes a physical change or is moved to a new location or source, such date shall remain the date of commencement of commercial operation of the unit, which shall continue to be treated as the same unit.

(ii) For a unit that is a TR NO_X Ozone Season unit under § 97.504 on the later of January 1, 2005 or the date the unit commences commercial operation as defined in the introductory text of paragraph (1) of this definition and that is subsequently replaced by a unit at the same or a different source, such date shall remain the replaced unit's date of commencement of commercial operation, and the replacement unit shall be treated as a separate unit with a separate date for commencement of commercial operation as defined in paragraph (1) or (2) of this definition as appropriate.

(2) Notwithstanding paragraph (1) of this definition and except as provided in § 97.505, for a unit that is not a TR NO_X Ozone Season unit under § 97.504 on the later of January 1, 2005 or the date the unit commences commercial operation as defined in introductory text of paragraph (1) of this definition, the unit's date for commencement of commercial operation shall be the date on which the unit becomes a TR NO_X Ozone Season unit under § 97.504.

(i) For a unit with a date for commencement of commercial operation as defined in the introductory text of paragraph (2) of this definition

and that subsequently undergoes a physical change or is moved to a different location or source, such date shall remain the date of commencement of commercial operation of the unit, which shall continue to be treated as the same unit.

(ii) For a unit with a date for commencement of commercial operation as defined in the introductory text of paragraph (2) of this definition and that is subsequently replaced by a unit at the same or a different source, such date shall remain the replaced unit's date of commencement of commercial operation, and the replacement unit shall be treated as a separate unit with a separate date for commencement of commercial operation as defined in paragraph (1) or (2) of this definition as appropriate.

Common designated representative means, with regard to a control period in a given year, a designated representative where, as of April 1 immediately after the allowance transfer deadline for such control period, the same natural person is authorized under §§ 97.513(a) and 97.515(a) as the designated representative for a group of one or more TR NO_X Ozone Season sources and units located in a State (and Indian country within the borders of such State).

Common designated representative's assurance level means, with regard to a specific common designated representative and a State (and Indian country within the borders of such State) and control period in a given year for which the State assurance level is exceeded as described in § 97.506(c)(2)(iii), the common designated representative's share of the State NO_X Ozone Season trading budget with the variability limit for the State for such control period.

Common designated representative's share means, with regard to a specific common designated representative for a control period in a given year:

(1) With regard to a total amount of NO_X emissions from all TR NO_X Ozone Season units in a State (and Indian country within the borders of such State) during such control period, the total tonnage of NO_X emissions during such control period from a group of one or more TR NO_X Ozone Season units located in such State (and such Indian country) and having the common designated representative for such control period;

(2) With regard to a State NO_X Ozone Season trading budget with the variability limit for such control period, the amount (rounded to the nearest allowance) equal to the sum of the total amount of TR NO_X Ozone Season allowances allocated for such control period to a group of one or more TR NO_X Ozone Season units located in the State (and Indian country within the borders of such State) and having the common designated representative for such control period and of the total amount of TR NO_X Ozone Season allowances purchased by an owner or operator of such TR NO_X Ozone Season units in an auction for such control period and submitted by the State or the permitting authority to the Administrator for recordation in the compliance accounts for such TR NO_X Ozone Season units in accordance with the TR NO_X Ozone Season allowance auction provisions in a SIP revision approved by the Administrator under § 52.38(b)(4) or (5) of this chapter, multiplied by the sum of the State NO_X Ozone Season trading budget under § 97.510(a) and the State's variability limit under § 97.510(b) for such control period and divided by such State NO_X Ozone Season trading budget;

(3) Provided that, in the case of a unit that operates during, but has no amount of TR NO_X Ozone Season allowances allocated under §§ 97.511 and 97.512 for, such control period, the unit shall be treated, solely for purposes of this definition, as being allocated an amount (rounded to the nearest allowance) of TR NO_X Ozone Season allowances for such control period equal to the unit's allowable NO_X emission rate applicable to such control period, multiplied by a capacity factor of 0.92 (if the unit is a boiler combusting any amount of coal or coal-derived fuel during such control period), 0.32 (if the unit is a simple combustion turbine during such control period), 0.71 (if the unit is a combined cycle turbine during such control period), 0.73 (if the unit is an integrated coal gasification combined cycle unit during such control period), or 0.44 (for any other unit), multiplied by the unit's maximum hourly load as reported in accordance with this subpart and by 3,672 hours/control period, and divided by 2,000 lb/ton.

Common stack means a single flue through which emissions from 2 or more units are exhausted.

Compliance account means an Allowance Management System account, established by the Administrator for a TR NO_X Ozone Season source under this subpart, in which any TR NO_X Ozone Season allowance allocations to the TR NO_X Ozone Season units at the source are recorded and in which are held any TR NO_X Ozone Season allowances available for use for a control period in a given year in complying with the source's TR NO_X Ozone Season emissions limitation in accordance with §§ 97.506 and 97.524.

Continuous emission monitoring system or *CEMS* means the equipment required under this subpart to sample, analyze, measure, and provide, by means of readings recorded at least once every 15 minutes and using an automated data acquisition and handling system (DAHS), a permanent record of NO_X emissions, stack gas volumetric flow rate, stack gas moisture content, and O_2 or CO_2 concentration (as applicable), in a manner consistent with part 75 of this chapter and §§ 97.530 through 97.535. The following systems are the principal types of continuous emission monitoring systems:

(1) A flow monitoring system, consisting of a stack flow rate monitor and an automated data acquisition and handling system and providing a permanent, continuous record of stack gas volumetric flow rate, in standard cubic feet per hour (scfh);

(2) A NO_X concentration monitoring system, consisting of a NO_X pollutant concentration monitor and an automated data acquisition and handling system and providing a permanent, continuous record of NO_X emissions, in parts per million (ppm);

(3) A NO_X emission rate (or NO_X-diluent) monitoring system, consisting of a NO_X pollutant concentration monitor, a diluent gas (CO_2 or O_2) monitor, and an automated data acquisition and handling system and providing a permanent, continuous record of NO_X concentration, in parts per million (ppm), diluent gas concentration, in percent CO_2 or O_2, and NO_X emission rate, in pounds per million British thermal units (lb/mmBtu);

(4) A moisture monitoring system, as defined in § 75.11(b)(2) of this chapter and providing a permanent, continuous record of the stack gas moisture content, in percent H_2O;

(5) A CO_2 monitoring system, consisting of a CO_2 pollutant concentration monitor (or an O_2 monitor plus suitable mathematical equations from which the CO_2 concentration is derived) and an automated data acquisition and handling system and providing a permanent, continuous record of CO_2 emissions, in percent CO_2; and

(6) An O_2 monitoring system, consisting of an O_2 concentration monitor and an automated data acquisition and handling system and providing a permanent, continuous record of O_2, in percent O_2.

Control period means the period starting May 1 of a calendar year, except as provided in § 97.506(c)(3), and

ending on September 30 of the same year, inclusive.

Designated representative means, for a TR NO_X Ozone Season source and each TR NO_X Ozone Season unit at the source, the natural person who is authorized by the owners and operators of the source and all such units at the source, in accordance with this subpart, to represent and legally bind each owner and operator in matters pertaining to the TR NO_X Ozone Season Trading Program. If the TR NO_X Ozone Season source is also subject to the Acid Rain Program, TR NO_X Annual Trading Program, TR SO_2 Group 1 Trading Program, or TR SO_2 Group 2 Trading Program, then this natural person shall be the same natural person as the designated representative, as defined in the respective program.

Emissions means air pollutants exhausted from a unit or source into the atmosphere, as measured, recorded, and reported to the Administrator by the designated representative, and as modified by the Administrator:

(1) In accordance with this subpart; and

(2) With regard to a period before the unit or source is required to measure, record, and report such air pollutants in accordance with this subpart, in accordance with part 75 of this chapter.

Excess emissions means any ton of emissions from the TR NO_X Ozone Season units at a TR NO_X Ozone Season source during a control period in a given year that exceeds the TR NO_X Ozone Season emissions limitation for the source for such control period.

Fossil fuel means—

(1) Natural gas, petroleum, coal, or any form of solid, liquid, or gaseous fuel derived from such material; or

(2) For purposes of applying the limitation on ''average annual fuel consumption of fossil fuel'' in §§ 97.504(b)(2)(i)(B) and (ii), natural gas, petroleum, coal, or any form of solid, liquid, or gaseous fuel derived from such material for the purpose of creating useful heat.

Fossil-fuel-fired means, with regard to a unit, combusting any amount of fossil fuel in 2005 or any calendar year thereafter.

General account means an Allowance Management System account, established under this subpart, that is not a compliance account or an assurance account.

Generator means a device that produces electricity.

Gross electrical output means, for a unit, electricity made available for use, including any such electricity used in the power production process (which process includes, but is not limited to, any on-site processing or treatment of fuel combusted at the unit and any on-site emission controls).

Heat input means, for a unit for a specified period of time, the product (in mmBtu/time) of the gross calorific value of the fuel (in mmBtu/lb) fed into the unit multiplied by the fuel feed rate (in lb of fuel/time), as measured, recorded, and reported to the Administrator by the designated representative and as modified by the Administrator in accordance with this subpart and excluding the heat derived from preheated combustion air, recirculated flue gases, or exhaust.

Heat input rate means, for a unit, the amount of heat input (in mmBtu) divided by unit operating time (in hr) or, for a unit and a specific fuel, the amount of heat input attributed to the fuel (in mmBtu) divided by the unit operating time (in hr) during which the unit combusts the fuel.

Heat rate means, for a unit, the unit's maximum design heat input (in Btu/hr), divided by the product of 1,000,000 Btu/mmBtu and the unit's maximum hourly load.

Indian country means ''Indian country'' as defined in 18 U.S.C. 1151.

Life-of-the-unit, firm power contractual arrangement means a unit participation power sales agreement under which a utility or industrial customer reserves, or is entitled to receive, a specified amount or percentage of nameplate capacity and associated energy generated by any specified unit and pays its proportional amount of such unit's total costs, pursuant to a contract:

(1) For the life of the unit;

(2) For a cumulative term of no less than 30 years, including contracts that permit an election for early termination; or

(3) For a period no less than 25 years or 70 percent of the economic useful life of the unit determined as of the time the unit is built, with option rights to purchase or release some portion of the nameplate capacity and associated energy generated by the unit at the end of the period.

Maximum design heat input means, for a unit, the maximum amount of fuel per hour (in Btu/hr) that the unit is capable of combusting on a steady state basis as of the initial installation of the unit as specified by the manufacturer of the unit.

Monitoring system means any monitoring system that meets the requirements of this subpart, including a continuous emission monitoring system, an alternative monitoring system, or an excepted monitoring system under part 75 of this chapter.

Nameplate capacity means, starting from the initial installation of a generator, the maximum electrical generating output (in MWe, rounded to the nearest tenth) that the generator is capable of producing on a steady state basis and during continuous operation (when not restricted by seasonal or other deratings) as of such installation as specified by the manufacturer of the generator or, starting from the completion of any subsequent physical change in the generator resulting in an increase in the maximum electrical generating output that the generator is capable of producing on a steady state basis and during continuous operation (when not restricted by seasonal or other deratings), such increased maximum amount (in MWe, rounded to the nearest tenth) as of such completion as specified by the person conducting the physical change.

Natural gas means ''natural gas'' as defined in § 72.2 of this chapter.

Newly affected TR NO_X Ozone Season unit means a unit that was not a TR NO_X Ozone Season unit when it began operating but that thereafter becomes a TR NO_X Ozone Season unit.

Operate or *operation* means, with regard to a unit, to combust fuel.

Operator means, for a TR NO_X Ozone Season source or a TR NO_X Ozone Season unit at a source respectively, any person who operates, controls, or supervises a TR NO_X Ozone Season unit at the source or the TR NO_X Ozone Season unit and shall include, but not be limited to, any holding company, utility system, or plant manager of such source or unit.

Owner means, for a TR NO_X Ozone Season source or a TR NO_X Ozone Season unit at a source respectively, any of the following persons:

(1) Any holder of any portion of the legal or equitable title in a TR NO_X Ozone Season unit at the source or the TR NO_X Ozone Season unit;

(2) Any holder of a leasehold interest in a TR NO_X Ozone Season unit at the source or the TR NO_X Ozone Season unit, provided that, unless expressly provided for in a leasehold agreement, ''owner'' shall not include a passive lessor, or a person who has an equitable interest through such lessor, whose rental payments are not based (either directly or indirectly) on the revenues or income from such TR NO_X Ozone Season unit; and

(3) Any purchaser of power from a TR NO_X Ozone Season unit at the source or the TR NO_X Ozone Season unit under a life-of-the-unit, firm power contractual arrangement.

Permanently retired means, with regard to a unit, a unit that is

unavailable for service and that the unit's owners and operators do not expect to return to service in the future.

Permitting authority means ''permitting authority'' as defined in §§ 70.2 and 71.2 of this chapter.

Potential electrical output capacity means, for a unit, 33 percent of the unit's maximum design heat input, divided by 3,413 Btu/kWh, divided by 1,000 kWh/MWh, and multiplied by 8,760 hr/yr.

Receive or *receipt of* means, when referring to the Administrator, to come into possession of a document, information, or correspondence (whether sent in hard copy or by authorized electronic transmission), as indicated in an official log, or by a notation made on the document, information, or correspondence, by the Administrator in the regular course of business.

Recordation, record, or *recorded* means, with regard to TR NO_X Ozone Season allowances, the moving of TR NO_X Ozone Season allowances by the Administrator into, out of, or between Allowance Management System accounts, for purposes of allocation, auction, transfer, or deduction.

Reference method means any direct test method of sampling and analyzing for an air pollutant as specified in § 75.22 of this chapter.

Replacement, replace, or *replaced* means, with regard to a unit, the demolishing of a unit, or the permanent retirement and permanent disabling of a unit, and the construction of another unit (the replacement unit) to be used instead of the demolished or retired unit (the replaced unit).

Sequential use of energy means:

(1) The use of reject heat from electricity production in a useful thermal energy application or process; or

(2) The use of reject heat from useful thermal energy application or process in electricity production.

Serial number means, for a TR NO_X Ozone Season allowance, the unique identification number assigned to each TR NO_X Ozone Season allowance by the Administrator.

Solid waste incineration unit means a stationary, fossil-fuel-fired boiler or stationary, fossil-fuel-fired combustion turbine that is a ''solid waste incineration unit'' as defined in section 129(g)(1) of the Clean Air Act.

Source means all buildings, structures, or installations located in one or more contiguous or adjacent properties under common control of the same person or persons. This definition does not change or otherwise affect the definition of ''major source'', ''stationary source'', or ''source'' as set forth and implemented in a title V operating permit program or any other program under the Clean Air Act.

State means one of the States that is subject to the TR NO_X Ozone Season Trading Program pursuant to § 52.38(b) of this chapter.

Submit or *serve* means to send or transmit a document, information, or correspondence to the person specified in accordance with the applicable regulation:

(1) In person;

(2) By United States Postal Service; or

(3) By other means of dispatch or transmission and delivery;

(4) Provided that compliance with any ''submission'' or ''service'' deadline shall be determined by the date of dispatch, transmission, or mailing and not the date of receipt.

Topping-cycle unit means a unit in which the energy input to the unit is first used to produce useful power, including electricity, where at least some of the reject heat from the electricity production is then used to provide useful thermal energy.

Total energy input means, for a unit, total energy of all forms supplied to the unit, excluding energy produced by the unit. Each form of energy supplied shall be measured by the lower heating value of that form of energy calculated as follows:

$$LHV = HHV - 10.55\ (W + 9H)$$

Where:

LHV = lower heating value of the form of energy in Btu/lb,

HHV = higher heating value of the form of energy in Btu/lb,

W = weight % of moisture in the form of energy, and

H = weight % of hydrogen in the form of energy.

Total energy output means, for a unit, the sum of useful power and useful thermal energy produced by the unit.

TR NO_X Annual Trading Program means a multi-state NO_X air pollution control and emission reduction program established in accordance with subpart AAAAA of this part and § 52.38(a) of this chapter (including such a program that is revised in a SIP revision approved by the Administrator under § 52.38(a)(3) or (4) of this chapter or that is established in a SIP revision approved by the Administrator under § 52.38(a)(5) of this chapter), as a means of mitigating interstate transport of fine particulates and NO_X.

TR NO_X Ozone Season allowance means a limited authorization issued and allocated or auctioned by the Administrator under this subpart, or by a State or permitting authority under a SIP revision approved by the Administrator under § 52.38(b)(3), (4), or (5) of this chapter, to emit one ton of NO_X during a control period of the specified calendar year for which the authorization is allocated or auctioned or of any calendar year thereafter under the TR NO_X Ozone Season Trading Program.

TR NO_X Ozone Season allowance deduction or deduct TR NO_X Ozone Season allowances means the permanent withdrawal of TR NO_X Ozone Season allowances by the Administrator from a compliance account (*e.g.*, in order to account for compliance with the TR NO_X Ozone Season emissions limitation) or from an assurance account (*e.g.*, in order to account for compliance with the assurance provisions under §§ 97.506 and 97.525).

TR NO_X Ozone Season allowances held or hold TR NO_X Ozone Season allowances means the TR NO_X Ozone Season allowances treated as included in an Allowance Management System account as of a specified point in time because at that time they:

(1) Have been recorded by the Administrator in the account or transferred into the account by a correctly submitted, but not yet recorded, TR NO_X Ozone Season allowance transfer in accordance with this subpart; and

(2) Have not been transferred out of the account by a correctly submitted, but not yet recorded, TR NO_X Ozone Season allowance transfer in accordance with this subpart.

TR NO_X Ozone Season emissions limitation means, for a TR NO_X Ozone Season source, the tonnage of NO_X emissions authorized in a control period in a given year by the TR NO_X Ozone Season allowances available for deduction for the source under § 97.524(a) for such control period.

TR NO_X Ozone Season source means a source that includes one or more TR NO_X Ozone Season units.

TR NO_X Ozone Season Trading Program means a multi-state NO_X air pollution control and emission reduction program established in accordance with this subpart and § 52.38(b) of this chapter (including such a program that is revised in a SIP revision approved by the Administrator under § 52.38(b)(3) or (4) of this chapter or that is established in a SIP revision approved by the Administrator under § 52.38(b)(5) of this chapter), as a means of mitigating interstate transport of ozone and NO_X.

TR NO_X Ozone Season unit means a unit that is subject to the TR NO_X Ozone Season Trading Program.

TR SO_2 Group 1 Trading Program means a multi-state SO_2 air pollution control and emission reduction program established in accordance with subpart CCCCC of this part and 52.39(a), (b), (d) through (f), (j), and (k) of this chapter (including such a program that is revised in a SIP revision approved by the Administrator under § 52.39(d) or (e) of this chapter or that is established in a SIP revision approved by the Administrator under § 52.39(f) of this chapter), as a means of mitigating interstate transport of fine particulates and SO_2.

TR SO_2 Group 2 Trading Program means a multi-state SO_2 air pollution control and emission reduction program established in accordance with subpart DDDDD of this part and 52.39(a), (c), and (g) through (k) of this chapter (including such a program that is revised in a SIP revision approved by the Administrator under § 52.39(g) or (h) of this chapter or that is established in a SIP revision approved by the Administrator under § 52.39(i) of this chapter), as a means of mitigating interstate transport of fine particulates and SO_2.

Unit means a stationary, fossil-fuel-fired boiler, stationary, fossil-fuel-fired combustion turbine, or other stationary, fossil-fuel-fired combustion device. A unit that undergoes a physical change or is moved to a different location or source shall continue to be treated as the same unit. A unit (the replaced unit) that is replaced by another unit (the replacement unit) at the same or a different source shall continue to be treated as the same unit, and the replacement unit shall be treated as a separate unit.

Unit operating day means, with regard to a unit, a calendar day in which the unit combusts any fuel.

Unit operating hour or *hour of unit operation* means, with regard to a unit, an hour in which the unit combusts any fuel.

Useful power means, with regard to a unit, electricity or mechanical energy that the unit makes available for use, excluding any such energy used in the power production process (which process includes, but is not limited to, any on-site processing or treatment of fuel combusted at the unit and any on-site emission controls).

Useful thermal energy means thermal energy that is:

(1) Made available to an industrial or commercial process (not a power production process), excluding any heat contained in condensate return or makeup water;

(2) Used in a heating application (*e.g.*, space heating or domestic hot water heating); or

(3) Used in a space cooling application (*i.e.*, in an absorption chiller).

Utility power distribution system means the portion of an electricity grid owned or operated by a utility and dedicated to delivering electricity to customers.

§ 97.503 Measurements, abbreviations, and acronyms.

Measurements, abbreviations, and acronyms used in this subpart are defined as follows:

Btu—British thermal unit
CO_2—carbon dioxide
H_2O—water
hr—hour
kW—kilowatt electrical
kWh—kilowatt hour
lb—pound
mmBtu—million Btu
MWe—megawatt electrical
MWh—megawatt hour
NO_X—nitrogen oxides
O_2—oxygen
ppm—parts per million
scfh—standard cubic feet per hour
SO_2—sulfur dioxide
yr—year

§ 97.504 Applicability.

(a) Except as provided in paragraph (b) of this section:

(1) The following units in a State (and Indian country within the borders of such State) shall be TR NO_X Ozone Season units, and any source that includes one or more such units shall be a TR NO_X Ozone Season source, subject to the requirements of this subpart: any stationary, fossil-fuel-fired boiler or stationary, fossil-fuel-fired combustion turbine serving at any time, on or after January 1, 2005, a generator with nameplate capacity of more than 25 MWe producing electricity for sale.

(2) If a stationary boiler or stationary combustion turbine that, under paragraph (a)(1) of this section, is not a TR NO_X Ozone Season unit begins to combust fossil fuel or to serve a generator with nameplate capacity of more than 25 MWe producing electricity for sale, the unit shall become a TR NO_X Ozone Season unit as provided in paragraph (a)(1) of this section on the first date on which it both combusts fossil fuel and serves such generator.

(b) Any unit in a State (and Indian country within the borders of such State) that otherwise is a TR NO_X Ozone Season unit under paragraph (a) of this section and that meets the requirements set forth in paragraph (b)(1)(i) or (2)(i) of this section shall not be a TR NO_X Ozone Season unit:

(1)(i) Any unit:

(A) Qualifying as a cogeneration unit throughout the later of 2005 or the 12-month period starting on the date the unit first produces electricity and continuing to qualify as a cogeneration unit throughout each calendar year ending after the later of 2005 or such 12-month period; and

(B) Not supplying in 2005 or any calendar year thereafter more than one-third of the unit's potential electric output capacity or 219,000 MWh, whichever is greater, to any utility power distribution system for sale.

(ii) If, after qualifying under paragraph (b)(1)(i) of this section as not being a TR NO_X Ozone Season unit, a unit subsequently no longer meets all the requirements of paragraph (b)(1)(i) of this section, the unit shall become a TR NO_X Ozone Season unit starting on the earlier of January 1 after the first calendar year during which the unit first no longer qualifies as a cogeneration unit or January 1 after the first calendar year during which the unit no longer meets the requirements of paragraph (b)(1)(i)(B) of this section. The unit shall thereafter continue to be a TR NO_X Ozone Season unit.

(2)(i) Any unit:

(A) Qualifying as a solid waste incineration unit throughout the later of 2005 or the 12-month period starting on the date the unit first produces electricity and continuing to qualify as a solid waste incineration unit throughout each calendar year ending after the later of 2005 or such 12-month period; and

(B) With an average annual fuel consumption of fossil fuel for the first 3 consecutive calendar years of operation starting no earlier than 2005 of less than 20 percent (on a Btu basis) and an average annual fuel consumption of fossil fuel for any 3 consecutive calendar years thereafter of less than 20 percent (on a Btu basis).

(ii) If, after qualifying under paragraph (b)(2)(i) of this section as not being a TR NO_X Ozone Season unit, a unit subsequently no longer meets all the requirements of paragraph (b)(1)(i) of this section, the unit shall become a TR NO_X Ozone Season unit starting on the earlier of January 1 after the first calendar year during which the unit first no longer qualifies as a solid waste incineration unit or January 1 after the first 3 consecutive calendar years after 2005 for which the unit has an average annual fuel consumption of fossil fuel of 20 percent or more. The unit shall thereafter continue to be a TR NOX Ozone Season unit.

(c) A certifying official of an owner or operator of any unit or other equipment

may submit a petition (including any supporting documents) to the Administrator at any time for a determination concerning the applicability, under paragraphs (a) and (b) of this section or a SIP revision approved under § 52.38(b)(4) or (5) of this chapter, of the TR NO_X Ozone Season Trading Program to the unit or other equipment.

(1) Petition content. The petition shall be in writing and include the identification of the unit or other equipment and the relevant facts about the unit or other equipment. The petition and any other documents provided to the Administrator in connection with the petition shall include the following certification statement, signed by the certifying official: ''I am authorized to make this submission on behalf of the owners and operators of the unit or other equipment for which the submission is made. I certify under penalty of law that I have personally examined, and am familiar with, the statements and information submitted in this document and all its attachments. Based on my inquiry of those individuals with primary responsibility for obtaining the information, I certify that the statements and information are to the best of my knowledge and belief true, accurate, and complete. I am aware that there are significant penalties for submitting false statements and information or omitting required statements and information, including the possibility of fine or imprisonment.''

(2) Response. The Administrator will issue a written response to the petition and may request supplemental information determined by the Administrator to be relevant to such petition. The Administrator's determination concerning the applicability, under paragraphs (a) and (b) of this section, of the TR NO_X Ozone Season Trading Program to the unit or other equipment shall be binding on any State or permitting authority unless the Administrator determines that the petition or other documents or information provided in connection with the petition contained significant, relevant errors or omissions.

§ 97.505 Retired unit exemption.

(a)(1) Any TR NO_X Ozone Season unit that is permanently retired shall be exempt from § 97.506(b) and (c)(1), § 97.524, and §§ 97.530 through 97.535.

(2) The exemption under paragraph (a)(1) of this section shall become effective the day on which the TR NO_X Ozone Season unit is permanently retired. Within 30 days of the unit's permanent retirement, the designated representative shall submit a statement to the Administrator. The statement shall state, in a format prescribed by the Administrator, that the unit was permanently retired on a specified date and will comply with the requirements of paragraph (b) of this section.

(b) Special provisions. (1) A unit exempt under paragraph (a) of this section shall not emit any NO_X, starting on the date that the exemption takes effect.

(2) For a period of 5 years from the date the records are created, the owners and operators of a unit exempt under paragraph (a) of this section shall retain, at the source that includes the unit, records demonstrating that the unit is permanently retired. The 5-year period for keeping records may be extended for cause, at any time before the end of the period, in writing by the Administrator. The owners and operators bear the burden of proof that the unit is permanently retired.

(3) The owners and operators and, to the extent applicable, the designated representative of a unit exempt under paragraph (a) of this section shall comply with the requirements of the TR NO_X Ozone Season Trading Program concerning all periods for which the exemption is not in effect, even if such requirements arise, or must be complied with, after the exemption takes effect.

(4) A unit exempt under paragraph (a) of this section shall lose its exemption on the first date on which the unit resumes operation. Such unit shall be treated, for purposes of applying allocation, monitoring, reporting, and recordkeeping requirements under this subpart, as a unit that commences commercial operation on the first date on which the unit resumes operation.

§ 97.506 Standard requirements.

(a) *Designated representative requirements.* The owners and operators shall comply with the requirement to have a designated representative, and may have an alternate designated representative, in accordance with §§ 97.513 through 97.518.

(b) *Emissions monitoring, reporting, and recordkeeping requirements.* (1) The owners and operators, and the designated representative, of each TR NO_X Ozone Season source and each TR NO_X Ozone Season unit at the source shall comply with the monitoring, reporting, and recordkeeping requirements of §§ 97.530 through 97.535.

(2) The emissions data determined in accordance with §§ 97.530 through 97.535 shall be used to calculate allocations of TR NO_X Ozone Season allowances under §§ 97.511(a)(2) and (b) and 97.512 and to determine compliance with the TR NO_X Ozone Season emissions limitation and assurance provisions under paragraph (c) of this section, provided that, for each monitoring location from which mass emissions are reported, the mass emissions amount used in calculating such allocations and determining such compliance shall be the mass emissions amount for the monitoring location determined in accordance with §§ 97.530 through 97.535 and rounded to the nearest ton, with any fraction of a ton less than 0.50 being deemed to be zero.

(c) NO_X emissions requirements. (1) TR NO_X Ozone Season emissions limitation. (i) As of the allowance transfer deadline for a control period in a given year, the owners and operators of each TR NO_X Ozone Season source and each TR NO_X Ozone Season unit at the source shall hold, in the source's compliance account, TR NO_X Ozone Season allowances available for deduction for such control period under § 97.524(a) in an amount not less than the tons of total NO_X emissions for such control period from all TR NO_X Ozone Season units at the source.

(ii) If total NO_X emissions during a control period in a given year from the TR NO_X Ozone Season units at a TR NO_X Ozone Season source are in excess of the TR NO_X Ozone Season emissions limitation set forth in paragraph (c)(1)(i) of this section, then:

(A) The owners and operators of the source and each TR NO_X Ozone Season unit at the source shall hold the TR NO_X Ozone Season allowances required for deduction under § 97.524(d); and

(B) The owners and operators of the source and each TR NO_X Ozone Season unit at the source shall pay any fine, penalty, or assessment or comply with any other remedy imposed, for the same violations, under the Clean Air Act, and each ton of such excess emissions and each day of such control period shall constitute a separate violation of this subpart and the Clean Air Act.

(2) TR NO_X Ozone Season assurance provisions. (i) If total NO_X emissions during a control period in a given year from all TR NO_X Ozone Season units at TR NO_X Ozone Season sources in a State (and Indian country within the borders of such State) exceed the State assurance level, then the owners and operators of such sources and units in each group of one or more sources and units having a common designated representative for such control period, where the common designated representative's share of such NO_X emissions during such control period exceeds the common designated

representative's assurance level for the State and such control period, shall hold (in the assurance account established for the owners and operators of such group) TR NO_X Ozone Season allowances available for deduction for such control period under § 97.525(a) in an amount equal to two times the product (rounded to the nearest whole number), as determined by the Administrator in accordance with § 97.525(b), of multiplying—

(A) The quotient of the amount by which the common designated representative's share of such NO_X emissions exceeds the common designated representative's assurance level divided by the sum of the amounts, determined for all common designated representatives for such sources and units in the State (and Indian country within the borders of such State) for such control period, by which each common designated representative's share of such NO_X emissions exceeds the respective common designated representative's assurance level; and

(B) The amount by which total NO_X emissions from all TR NO_X Ozone Season units at TR NO_X Ozone Season sources in the State (and Indian country within the borders of such State) for such control period exceed the State assurance level.

(ii) The owners and operators shall hold the TR NO_X Ozone Season allowances required under paragraph (c)(2)(i) of this section, as of midnight of November 1 (if it is a business day), or midnight of the first business day thereafter (if November 1 is not a business day), immediately after such control period.

(iii) Total NO_X emissions from all TR NO_X Ozone Season units at TR NO_X Ozone Season sources in a State (and Indian country within the borders of such State) during a control period in a given year exceed the State assurance level if such total NO_X emissions exceed the sum, for such control period, of the State NO_X Ozone Season trading budget under § 97.510(a) and the State's variability limit under § 97.510(b).

(iv) It shall not be a violation of this subpart or of the Clean Air Act if total NO_X emissions from all TR NO_X Ozone Season units at TR NO_X Ozone Season sources in a State (and Indian country within the borders of such State) during a control period exceed the State assurance level or if a common designated representative's share of total NO_X emissions from the TR NO_X Ozone Season units at TR NO_X Ozone Season sources in a State (and Indian country within the borders of such State) during a control period exceeds the common designated representative's assurance level.

(v) To the extent the owners and operators fail to hold TR NO_X Ozone Season allowances for a control period in a given year in accordance with paragraphs (c)(2)(i) through (iii) of this section,

(A) The owners and operators shall pay any fine, penalty, or assessment or comply with any other remedy imposed under the Clean Air Act; and

(B) Each TR NO_X Ozone Season allowance that the owners and operators fail to hold for such control period in accordance with paragraphs (c)(2)(i) through (iii) of this section and each day of such control period shall constitute a separate violation of this subpart and the Clean Air Act.

(3) Compliance periods. A TR NO_X Ozone Season unit shall be subject to the requirements under paragraphs (c)(1) and (c)(2) of this section for the control period starting on the later of May 1, 2012 or the deadline for meeting the unit's monitor certification requirements under § 97.530(b) and for each control period thereafter.

(4) Vintage of allowances held for compliance. (i) A TR NO_X Ozone Season allowance held for compliance with the requirements under paragraph (c)(1)(i) of this section for a control period in a given year must be a TR NO_X Ozone Season allowance that was allocated for such control period or a control period in a prior year.

(ii) A TR NO_X Ozone Season allowance held for compliance with the requirements under paragraphs (c)(1)(ii)(A) and (2)(i) through (iii) of this section for a control period in a given year must be a TR NO_X Ozone Season allowance that was allocated for a control period in a prior year or the control period in the given year or in the immediately following year.

(5) Allowance Management System requirements. Each TR NO_X Ozone Season allowance shall be held in, deducted from, or transferred into, out of, or between Allowance Management System accounts in accordance with this subpart.

(6) Limited authorization. A TR NO_X Ozone Season allowance is a limited authorization to emit one ton of NO_X during the control period in one year. Such authorization is limited in its use and duration as follows:

(i) Such authorization shall only be used in accordance with the TR NO_X Ozone Season Trading Program; and

(ii) Notwithstanding any other provision of this subpart, the Administrator has the authority to terminate or limit the use and duration of such authorization to the extent the Administrator determines is necessary or appropriate to implement any provision of the Clean Air Act.

(7) Property right. A TR NO_X Ozone Season allowance does not constitute a property right.

(d) *Title V permit requirements.* (1) No title V permit revision shall be required for any allocation, holding, deduction, or transfer of TR NO_X Ozone Season allowances in accordance with this subpart.

(2) A description of whether a unit is required to monitor and report NO_X emissions using a continuous emission monitoring system (under subpart H of part 75 of this chapter), an excepted monitoring system (under appendices D and E to part 75 of this chapter), a low mass emissions excepted monitoring methodology (under § 75.19 of this chapter), or an alternative monitoring system (under subpart E of part 75 of this chapter) in accordance with §§ 97.530 through 97.535 may be added to, or changed in, a title V permit using minor permit modification procedures in accordance with §§ 70.7(e)(2) and 71.7(e)(1) of this chapter, provided that the requirements applicable to the described monitoring and reporting (as added or changed, respectively) are already incorporated in such permit. This paragraph explicitly provides that the addition of, or change to, a unit's description as described in the prior sentence is eligible for minor permit modification procedures in accordance with §§ 70.7(e)(2)(i)(B) and 71.7(e)(1)(i)(B) of this chapter.

(e) *Additional recordkeeping and reporting requirements.* (1) Unless otherwise provided, the owners and operators of each TR NO_X Ozone Season source and each TR NO_X Ozone Season unit at the source shall keep on site at the source each of the following documents (in hardcopy or electronic format) for a period of 5 years from the date the document is created. This period may be extended for cause, at any time before the end of 5 years, in writing by the Administrator.

(i) The certificate of representation under § 97.516 for the designated representative for the source and each TR NO_X Ozone Season unit at the source and all documents that demonstrate the truth of the statements in the certificate of representation; provided that the certificate and documents shall be retained on site at the source beyond such 5-year period until such certificate of representation and documents are superseded because of the submission of a new certificate of representation under § 97.516 changing the designated representative.

(ii) All emissions monitoring information, in accordance with this subpart.

(iii) Copies of all reports, compliance certifications, and other submissions and all records made or required under, or to demonstrate compliance with the requirements of, the TR NO_X Ozone Season Trading Program.

(2) The designated representative of a TR NO_X Ozone Season source and each TR NO_X Ozone Season unit at the source shall make all submissions required under the TR NO_X Ozone Season Trading Program, except as provided in § 97.518. This requirement does not change, create an exemption from, or otherwise affect the responsible official submission requirements under a title V operating permit program in parts 70 and 71 of this chapter.

(f) *Liability.* (1) Any provision of the TR NO_X Ozone Season Trading Program that applies to a TR NO_X Ozone Season source or the designated representative of a TR NO_X Ozone Season source shall also apply to the owners and operators of such source and of the TR NO_X Ozone Season units at the source.

(2) Any provision of the TR NO_X Ozone Season Trading Program that applies to a TR NO_X Ozone Season unit or the designated representative of a TR NO_X Ozone Season unit shall also apply to the owners and operators of such unit.

(g) *Effect on other authorities.* No provision of the TR NO_X Ozone Season Trading Program or exemption under § 97.505 shall be construed as exempting or excluding the owners and operators, and the designated representative, of a TR NO_X Ozone Season source or TR NO_X Ozone Season unit from compliance with any other provision of the applicable, approved State implementation plan, a federally enforceable permit, or the Clean Air Act.

§ 97.507 Computation of time.

(a) Unless otherwise stated, any time period scheduled, under the TR NO_X Ozone Season Trading Program, to begin on the occurrence of an act or event shall begin on the day the act or event occurs.

(b) Unless otherwise stated, any time period scheduled, under the TR NO_X Ozone Season Trading Program, to begin before the occurrence of an act or event shall be computed so that the period ends the day before the act or event occurs.

(c) Unless otherwise stated, if the final day of any time period, under the TR NO_X Ozone Season Trading Program, is not a business day, the time period shall be extended to the next business day.

§ 97.508 Administrative appeal procedures.

The administrative appeal procedures for decisions of the Administrator under the TR NO_X Ozone Season Trading Program are set forth in part 78 of this chapter.

§ 97.509 [Reserved]

§ 97.510 State NO_X Ozone Season trading budgets, new unit set-asides, Indian country new unit set-aside, and variability limits.

(a) The State NO_X Ozone Season trading budgets, new unit set-asides, and Indian country new unit set-asides for allocations of TR NO_X Ozone Season allowances for the control periods in 2012 and thereafter are as follows:

State	NO_X Ozone Season trading budget (tons)* for 2012 and 2013	New unit set-aside (tons) for 2012 and 2013	Indian country new unit set-aside (tons) for 2012 and 2013
Alabama	31,746	635	.....
Arkansas	15,037	301	.....
Florida	27,825	529	28
Georgia	27,944	559	.....
Illinois	21,208	1,697	.....
Indiana	46,876	1,406	.....
Kentucky	36,167	1,447	.....
Louisiana	13,432	390	13
Maryland	7,179	144	.....
Mississippi	10,160	193	10
New Jersey	3,382	68	.....
New York	8,331	242	8
North Carolina	22,168	1,308	22
Ohio	40,063	801	.....
Pennsylvania	52,201	1,044	.....
South Carolina	13,909	264	14
Tennessee	14,908	298	.....
Texas	63,043	1,828	63
Virginia	14,452	723	.....
West Virginia	25,283	1,264	.....

State	NO_X Ozone Season trading budget (tons)* for 2014 and thereafter	New unit set-aside (tons) for 2014 and thereafter	Indian country new unit set-aside (tons) for 2014 and thereafter
Alabama	31,499	630	.....
Arkansas	15,037	301	.....
Florida	27,825	529	28
Georgia	18,279	366	.....
Illinois	21,208	1,697	.....
Indiana	46,175	1,385	.....
Kentucky	32,674	1,307	.....
Louisiana	13,432	390	13
Maryland	7,179	144	.....
Mississippi	10,160	193	10
New Jersey	3,382	68	.....

State	NO_X Ozone Season trading budget (tons) * for 2014 and thereafter	New unit set-aside (tons) for 2014 and thereafter	Indian country new unit set-aside (tons) for 2014 and thereafter
New York	8,331	242	8
North Carolina	18,455	1,089	18
Ohio	37,792	756	
Pennsylvania	51,912	1,038	
South Carolina	13,909	264	14
Tennessee	8,016	160	
Texas	63,043	1,828	63
Virginia	14,452	723	
West Virginia	23,291	1,165	

* Each trading budget includes the new unit set-aside and, where applicable, the Indian country new unit set-aside and does not include the variability limit.

(b) The States' variability limits for the State NO_X Ozone Season trading budgets for the control periods in 2012 and thereafter are as follows:

State	Variability limits for 2012 and 2013	Variability limits for 2014 and thereafter
Alabama	6,667	6,615
Arkansas	3,158	3,158
Florida	5,843	5,843
Georgia	5,868	3,839
Illinois	4,454	4,454
Indiana	9,844	9,697
Kentucky	7,595	6,862
Louisiana	2,821	2,821
Maryland	1,508	1,508
Mississippi	2,134	2,134
New Jersey	710	710
New York	1,750	1,750
North Carolina	4,655	3,876
Ohio	8,413	7,936
Pennsylvania	10,962	10,902
South Carolina	2,921	2,921
Tennessee	3,131	1,683
Texas	13,239	13,239
Virginia	3,035	3,035
West Virginia	5,309	4,891

§ 97.511 Timing requirements for TR NO_X Ozone Season allowance allocations.

(a) *Existing units.* (1) TR NO_X Ozone Season allowances are allocated, for the control periods in 2012 and each year thereafter, as provided in a notice of data availability issued by the Administrator. Providing an allocation to a unit in such notice does not constitute a determination that the unit is a TR NO_X Ozone Season unit, and not providing an allocation to a unit in such notice does not constitute a determination that the unit is not a TR NO_X Ozone Season unit.

(2) Notwithstanding paragraph (a)(1) of this section, if a unit provided an allocation in the notice of data availability issued under paragraph (a)(1) of this section does not operate, starting after 2011, during the control period in two consecutive years, such unit will not be allocated the TR NO_X Ozone Season allowances provided in such notice for the unit for the control periods in the fifth year after the first such year and in each year after that fifth year. All TR NO_X Ozone Season allowances that would otherwise have been allocated to such unit will be allocated to the new unit set-aside for the State where such unit is located and for the respective years involved. If such unit resumes operation, the Administrator will allocate TR NO_X Ozone Season allowances to the unit in accordance with paragraph (b) of this section.

(b) *New units.*—(1) New unit set-asides. (i) By June 1, 2012 and June 1 of each year thereafter, the Administrator will calculate the TR NO_X Ozone Season allowance allocation to each TR NO_X Ozone Season unit in a State, in accordance with § 97.512(a)(2) through (7) and (12), for the control period in the year of the applicable calculation deadline under this paragraph and will promulgate a notice of data availability of the results of the calculations.

(ii) For each notice of data availability required in paragraph (b)(1)(i) of this section, the Administrator will provide an opportunity for submission of objections to the calculations referenced in such notice.

(A) Objections shall be submitted by the deadline specified in each notice of data availability required in paragraph (b)(1)(i) of this section and shall be limited to addressing whether the calculations (including the identification of the TR NO_X Ozone Season units) are in accordance with § 97.512(a)(2) through (7) and (12) and §§ 97.506(b)(2) and 97.530 through 97.535.

(B) The Administrator will adjust the calculations to the extent necessary to ensure that they are in accordance with the provisions referenced in paragraph (b)(1)(ii)(A) of this section. By August 1 immediately after the promulgation of each notice of data availability required in paragraph (b)(1)(i) of this section, the Administrator will promulgate a notice

of data availability of any adjustments that the Administrator determines to be necessary with regard to allocations under § 97.512(a)(2) through (7) and (12) and the reasons for accepting or rejecting any objections submitted in accordance with paragraph (b)(1)(ii)(A) of this section.

(iii) If the new unit set-aside for such control period contains any TR NO_X Ozone Season allowances that have not been allocated in the applicable notice of data availability required in paragraph (b)(1)(ii) of this section, the Administrator will promulgate, by September 15 immediately after such notice, a notice of data availability that identifies any TR NO_X Ozone Season units that commenced commercial operation during the period starting May 1 of the year before the year of such control period and ending August 31 of year of such control period.

(iv) For each notice of data availability required in paragraph (b)(1)(iii) of this section, the Administrator will provide an opportunity for submission of objections to the identification of TR NO_X Ozone Season units in such notice.

(A) Objections shall be submitted by the deadline specified in each notice of data availability required in paragraph (b)(1)(iii) of this section and shall be limited to addressing whether the identification of TR NO_X Ozone Season units in such notice is in accordance with paragraph (b)(1)(iii) of this section.

(B) The Administrator will adjust the identification of TR NO_X Ozone Season units in the each notice of data availability required in paragraph (b)(1)(iii) of this section to the extent necessary to ensure that it is in accordance with paragraph (b)(1)(iii) of this section and will calculate the TR NO_X Ozone Season allowance allocation to each TR NO_X Ozone Season unit in accordance with § 97.512(a)(9), (10), and (12) and §§ 97.506(b)(2) and 97.530 through 97.535. By November 15 immediately after the promulgation of each notice of data availability required in paragraph (b)(1)(iii) of this section, the Administrator will promulgate a notice of data availability of any adjustments of the identification of TR NO_X Ozone Season units that the Administrator determines to be necessary, the reasons for accepting or rejecting any objections submitted in accordance with paragraph (b)(1)(iv)(A) of this section, and the results of such calculations.

(v) To the extent any TR NO_X Ozone Season allowances are added to the new unit set-aside after promulgation of each notice of data availability required in paragraph (b)(1)(iv) of this section, the Administrator will promulgate additional notices of data availability, as deemed appropriate, of the allocation of such TR NO_X Ozone Season allowances in accordance with § 97.512(a)(10).

(2) Indian country new unit set-asides. (i) By June 1, 2012 and June 1 of each year thereafter, the Administrator will calculate the TR NO_X Ozone Season allowance allocation to each TR NO_X Ozone Season unit in Indian country within the borders of a State, in accordance with § 97.512(b)(2) through (7) and (12), for the control period in the year of the applicable calculation deadline under this paragraph and will promulgate a notice of data availability of the results of the calculations.

(ii) For each notice of data availability required in paragraph (b)(2)(i) of this section, the Administrator will provide an opportunity for submission of objections to the calculations referenced in such notice.

(A) Objections shall be submitted by the deadline specified in each notice of data availability required in paragraph (b)(2)(i) of this section and shall be limited to addressing whether the calculations (including the identification of the TR NO_X Ozone Season units) are in accordance with § 97.512(b)(2) through (7) and (12) and §§ 97.506(b)(2) and 97.530 through 97.535.

(B) The Administrator will adjust the calculations to the extent necessary to ensure that they are in accordance with the provisions referenced in paragraph (b)(2)(ii)(A) of this section. By August 1 immediately after the promulgation of each notice of data availability required in paragraph (b)(2)(i) of this section, the Administrator will promulgate a notice of data availability of any adjustments that the Administrator determines to be necessary with regard to allocations under § 97.512(b)(2) through (7) and (12) and the reasons for accepting or rejecting any objections submitted in accordance with paragraph (b)(2)(ii)(A) of this section.

(iii) If the Indian country new unit set-aside for such control period contains any TR NO_X Ozone Season allowances that have not been allocated in the applicable notice of data availability required in paragraph (b)(2)(ii) of this section, the Administrator will promulgate, by September 15 immediately after such notice, a notice of data availability that identifies any TR NO_X Ozone Season units that commenced commercial operation during the period starting May 1 of the year before the year of such control period and ending August 31 of year of such control period.

(iv) For each notice of data availability required in paragraph (b)(2)(iii) of this section, the Administrator will provide an opportunity for submission of objections to the identification of TR NO_X Ozone Season units in such notice.

(A) Objections shall be submitted by the deadline specified in each notice of data availability required in paragraph (b)(2)(iii) of this section and shall be limited to addressing whether the identification of TR NO_X Ozone Season units in such notice is in accordance with paragraph (b)(2)(iii) of this section.

(B) The Administrator will adjust the identification of TR NO_X Ozone Season units in the each notice of data availability required in paragraph (b)(2)(iii) of this section to the extent necessary to ensure that it is in accordance with paragraph (b)(2)(iii) of this section and will calculate the TR NO_X Ozone Season allowance allocation to each TR NO_X Ozone Season unit in accordance with § 97.512(b)(9), (10), and (12) and §§ 97.506(b)(2) and 97.530 through 97.535. By November 15 immediately after the promulgation of each notice of data availability required in paragraph (b)(2)(iii) of this section, the Administrator will promulgate a notice of data availability of any adjustments of the identification of TR NO_X Ozone Season units that the Administrator determines to be necessary, the reasons for accepting or rejecting any objections submitted in accordance with paragraph (b)(2)(iv)(A) of this section, and the results of such calculations. (v) To the extent any TR NO_X Ozone Season allowances are added to the Indian country new unit set-aside after promulgation of each notice of data availability required in paragraph (b)(2)(iv) of this section, the Administrator will promulgate additional notices of data availability, as deemed appropriate, of the allocation of such TR NO_X Ozone Season allowances in accordance with § 97.512(b)(10).

(c) *Units incorrectly allocated TR NO_X Ozone Season allowances.* (1) For each control period in 2012 and thereafter, if the Administrator determines that TR NO_X Ozone Season allowances were allocated under paragraph (a) of this section, or under a provision of a SIP revision approved under § 52.38(b)(3), (4), or (5) of this chapter, where such control period and the recipient are covered by the provisions of paragraph (c)(1)(i) of this section or were allocated under § 97.512(a)(2) through (7), (9), and (12) and (b)(2) through (7), (9), and (12), or under a provision of a SIP revision approved under § 52.38(b)(4) or (5) of this chapter, where such control period and the recipient are covered by the

provisions of paragraph (c)(1)(ii) of this section, then the Administrator will notify the designated representative of the recipient and will act in accordance with the procedures set forth in paragraphs (c)(2) through (5) of this section:

(i)(A) The recipient is not actually a TR NO_X Ozone Season unit under § 97.504 as of May 1, 2012 and is allocated TR NO_X Ozone Season allowances for such control period or, in the case of an allocation under a provision of a SIP revision approved under § 52.38(b)(3), (4), or (5) of this chapter, the recipient is not actually a TR NO_X Ozone Season unit as of May 1, 2012 and is allocated TR NO_X Ozone Season allowances for such control period that the SIP revision provides should be allocated only to recipients that are TR NO_X Ozone Season units as of May 1, 2012; or

(B) The recipient is not located as of May 1 of the control period in the State from whose NO_X Ozone Season trading budget the TR NO_X Ozone Season allowances allocated under paragraph (a) of this section, or under a provision of a SIP revision approved under § 52.38(b)(3), (4), or (5) of this chapter, were allocated for such control period.

(ii) The recipient is not actually a TR NO_X Ozone Season unit under § 97.504 as of May 1 of such control period and is allocated TR NO_X Ozone Season allowances for such control period or, in the case of an allocation under a provision of a SIP revision approved under § 52.38(b)(3), (4), or (5) of this chapter, the recipient is not actually a TR NO_X Ozone Season unit as of January 1 of such control period and is allocated TR NO_X Ozone Season allowances for such control period that the SIP revision provides should be allocated only to recipients that are TR NO_X Ozone Season units as of May 1 of such control period.

(2) Except as provided in paragraph (c)(3) or (4) of this section, the Administrator will not record such TR NO_X Ozone Season allowances under § 97.521.

(3) If the Administrator already recorded such TR NO_X Ozone Season allowances under § 97.521 and if the Administrator makes the determination under paragraph (c)(1) of this section before making deductions for the source that includes such recipient under § 97.524(b) for such control period, then the Administrator will deduct from the account in which such TR NO_X Ozone Season allowances were recorded an amount of TR NO_X Ozone Season allowances allocated for the same or a prior control period equal to the amount of such already recorded TR NO_X Ozone Season allowances. The authorized account representative shall ensure that there are sufficient TR NO_X Ozone Season allowances in such account for completion of the deduction.

(4) If the Administrator already recorded such TR NO_X Ozone Season allowances under § 97.521 and if the Administrator makes the determination under paragraph (c)(1) of this section after making deductions for the source that includes such recipient under § 97.524(b) for such control period, then the Administrator will not make any deduction to take account of such already recorded TR NO_X Ozone Season allowances.

(5)(i) With regard to the TR NO_X Ozone Season allowances that are not recorded, or that are deducted as an incorrect allocation, in accordance with paragraphs (c)(2) and (3) of this section for a recipient under paragraph (c)(1)(i) of this section, the Administrator will:

(A) Transfer such TR NO_X Ozone Season allowances to the new unit set-aside for such control period for the State from whose NO_X Ozone Season trading budget the TR NO_X Ozone Season allowances were allocated; or

(B) If the State has a SIP revision approved under § 52.38(b)(4) or (5) covering such control period, include such TR NO_X Annual allowances in the portion of the State NO_X Ozone Season trading budget that may be allocated for such control period in accordance with such SIP revision.

(ii) With regard to the TR NO_X Ozone Season allowances that were not allocated from the Indian country new unit set-aside for such control period and that are not recorded, or that are deducted as an incorrect allocation, in accordance with paragraphs (c)(2) and (3) of this section for a recipient under paragraph (c)(1)(ii) of this paragraph, the Administrator will:

(A) Transfer such TR NO_X Ozone Season allowances to the new unit set-aside for such control period; or

(B) If the State has a SIP revision approved under § 52.38(b)(4) or (5) covering such control period, include such TR NO_X Ozone Season allowances in the portion of the State NO_X Ozone Season trading budget that may be allocated for such control period in accordance with such SIP revision.

(iii) With regard to the TR NO_X Ozone Season allowances that were allocated from the Indian country new unit set-aside for such control period and that are not recorded, or that are deducted as an incorrect allocation, in accordance with paragraphs (c)(2) and (3) of this section for a recipient under paragraph (c)(1)(ii) of this paragraph, the Administrator will transfer such TR NO_X Ozone Season allowances to the Indian country new unit set-aside for such control period.

§ 97.512 TR NO_X Ozone Season allowance allocations to new units.

(a) For each control period in 2012 and thereafter and for the TR NO_X Ozone Season units in each State, the Administrator will allocate TR NO_X Ozone Season allowances to the TR NO_X Ozone Season units as follows:

(1) The TR NO_X Ozone Season allowances will be allocated to the following TR NO_X Ozone Season units, except as provided in paragraph (a)(10) of this section:

(i) TR NO_X Ozone Season units that are not allocated an amount of TR NO_X Ozone Season allowances in the notice of data availability issued under § 97.511(a)(1);

(ii) TR NO_X Ozone Season units whose allocation of an amount of TR NO_X Ozone Season allowances for such control period in the notice of data availability issued under § 97.511(a)(1) is covered by § 97.511(c)(2) or (3);

(iii) TR NO_X Ozone Season units that are allocated an amount of TR NO_X Ozone Season allowances for such control period in the notice of data availability issued under § 97.511(a)(1), which allocation is terminated for such control period pursuant to § 97.511(a)(2), and that operate during the control period immediately preceding such control period; or

(iv) For purposes of paragraph (a)(9) of this section, TR NO_X Ozone Season units under § 97.511(c)(1)(ii) whose allocation of an amount of TR NO_X Ozone Season allowances for such control period in the notice of data availability issued under § 97.511(b)(1)(ii)(B) is covered by § 97.511(c)(2) or (3).

(2) The Administrator will establish a separate new unit set-aside for the State for each such control period. Each such new unit set-aside will be allocated TR NO_X Ozone Season allowances in an amount equal to the applicable amount of tons of NO_X emissions as set forth in § 97.510(a) and will be allocated additional TR NO_X Ozone Season allowances (if any) in accordance with §§ 97.511(a)(2) and (c)(5) and paragraph (b)(10) of this section.

(3) The Administrator will determine, for each TR NO_X Ozone Season unit described in paragraph (a)(1) of this section, an allocation of TR NO_X Ozone Season allowances for the later of the following control periods and for each subsequent control period:

(i) The control period in 2012;

(ii) The first control period after the control period in which the TR NO_X

Ozone Season unit commences commercial operation;

(iii) For a unit described in paragraph (a)(1)(ii) of this section, the first control period in which the TR NO_X Ozone Season unit operates in the State after operating in another jurisdiction and for which the unit is not already allocated one or more TR NO_X Ozone Season allowances; and

(iv) For a unit described in paragraph (a)(1)(iii) of this section, the first control period after the control period in which the unit resumes operation.

(4)(i) The allocation to each TR NO_X Ozone Season unit described in paragraph (a)(1)(i) through (iii) of this section and for each control period described in paragraph (a)(3) of this section will be an amount equal to the unit's total tons of NO_X emissions during the immediately preceding control period.

(ii) The Administrator will adjust the allocation amount in paragraph (a)(4)(i) in accordance with paragraphs (a)(5) through (7) and (12) of this section.

(5) The Administrator will calculate the sum of the TR NO_X Ozone Season allowances determined for all such TR NO_X Ozone Season units under paragraph (a)(4)(i) of this section in the State for such control period.

(6) If the amount of TR NO_X Ozone Season allowances in the new unit set-aside for the State for such control period is greater than or equal to the sum under paragraph (a)(5) of this section, then the Administrator will allocate the amount of TR NO_X Ozone Season allowances determined for each such TR NO_X Ozone Season unit under paragraph (a)(4)(i) of this section.

(7) If the amount of TR NO_X Ozone Season allowances in the new unit set-aside for the State for such control period is less than the sum under paragraph (a)(5) of this section, then the Administrator will allocate to each such TR NO_X Ozone Season unit the amount of the TR NO_X Ozone Season allowances determined under paragraph (a)(4)(i) of this section for the unit, multiplied by the amount of TR NO_X Ozone Season allowances in the new unit set-aside for such control period, divided by the sum under paragraph (a)(5) of this section, and rounded to the nearest allowance.

(8) The Administrator will notify the public, through the promulgation of the notices of data availability described in § 97.511(b)(1)(i) and (ii), of the amount of TR NO_X Ozone Season allowances allocated under paragraphs (a)(2) through (7) and (12) of this section for such control period to each TR NO_X Ozone Season unit eligible for such allocation.

(9) If, after completion of the procedures under paragraphs (a)(5) through (8) of this section for such control period, any unallocated TR NO_X Ozone Season allowances remain in the new unit set-aside for the State for such control period, the Administrator will allocate such TR NO_X Ozone Season allowances as follows—

(i) The Administrator will determine, for each unit described in paragraph (a)(1) of this section that commenced commercial operation during the period starting May 1 of the year before the year of such control period and ending August 31 of year of such control period, the positive difference (if any) between the unit's emissions during such control period and the amount of TR NO_X Ozone Season allowances referenced in the notice of data availability required under § 97.511(b)(1)(ii) for the unit for such control period;

(ii) The Administrator will determine the sum of the positive differences determined under paragraph (a)(9)(i) of this section;

(iii) If the amount of unallocated TR NO_X Ozone Season allowances remaining in the new unit set-aside for the State for such control period is greater than or equal to the sum determined under paragraph (a)(9)(ii) of this section, then the Administrator will allocate the amount of TR NO_X Ozone Season allowances determined for each such TR NO_X Ozone Season unit under paragraph (a)(9)(i) of this section; and

(iv) If the amount of unallocated TR NO_X Ozone Season allowances remaining in the new unit set-aside for the State for such control period is less than the sum under paragraph (a)(9)(ii) of this section, then the Administrator will allocate to each such TR NO_X Ozone Season unit the amount of the TR NO_X Ozone Season allowances determined under paragraph (a)(9)(i) of this section for the unit, multiplied by the amount of unallocated TR NO_X Ozone Season allowances remaining in the new unit set-aside for such control period, divided by the sum under paragraph (a)(9)(ii) of this section, and rounded to the nearest allowance.

(10) If, after completion of the procedures under paragraphs (a)(9) and (12) of this section for such control period, any unallocated TR NO_X Ozone Season allowances remain in the new unit set-aside for the State for such control period, the Administrator will allocate to each TR NO_X Ozone Season unit that is in the State, is allocated an amount of TR NO_X Ozone Season allowances in the notice of data availability issued under § 97.511(a)(1), and continues to be allocated TR NO_X Ozone Season allowances for such control period in accordance with § 97.511(a)(2), an amount of TR NO_X Ozone Season allowances equal to the following: the total amount of such remaining unallocated TR NO_X Ozone Season allowances in such new unit set-aside, multiplied by the unit's allocation under § 97.511(a) for such control period, divided by the remainder of the amount of tons in the applicable State NO_X Ozone Season trading budget minus the sum of the amounts of tons in such new unit set-aside and the Indian country new unit set-aside for the State for such control period, and rounded to the nearest allowance.

(11) The Administrator will notify the public, through the promulgation of the notices of data availability described in § 97.511(b)(1)(iii), (iv), and (v), of the amount of TR NO_X Ozone Season allowances allocated under paragraphs (a)(9), (10), and (12) of this section for such control period to each TR NO_X Ozone Season unit eligible for such allocation.

(12)(i) Notwithstanding the requirements of paragraphs (a)(2) through (11) of this section, if the calculations of allocations of a new unit set-aside for a control period in a given year under paragraph (a)(7) of this section, paragraphs (a)(6) and (9)(iv) of this section, or paragraphs (a)(6), (9)(iii), and (10) of this section would otherwise result in total allocations of such new unit set-aside exceeding the total amount of such new unit set-aside, then the Administrator will adjust the results of the calculations under paragraph (a)(7), (9)(iv), or (10) of this section, as applicable, as follows. The Administrator will list the TR NO_X Ozone Season units in descending order based on the amount of such units' allocations under paragraph (a)(7), (9)(iv), or (10) of this section, as applicable, and, in cases of equal allocation amounts, in alphabetical order of the relevant source's name and numerical order of the relevant unit's identification number, and will reduce each unit's allocation under paragraph (a)(7), (9)(iv), or (10) of this section, as applicable, by one TR NO_X Ozone Season allowance (but not below zero) in the order in which the units are listed and will repeat this reduction process as necessary, until the total allocations of such new unit set-aside equal the total amount of such new unit set-aside.

(ii) Notwithstanding the requirements of paragraphs (a)(10) and (11) of this section, if the calculations of allocations of a new unit set-aside for a control period in a given year under paragraphs (a)(6), (9)(iii), and (10) of this section would otherwise result in a total

allocations of such new unit set-aside less than the total amount of such new unit set-aside, then the Administrator will adjust the results of the calculations under paragraph (a)(10) of this section, as follows. The Administrator will list the TR NO_X Ozone Season units in descending order based on the amount of such units' allocations under paragraph (a)(10) of this section and, in cases of equal allocation amounts, in alphabetical order of the relevant source's name and numerical order of the relevant unit's identification number, and will increase each unit's allocation under paragraph (a)(10) of this section by one TR NO_X Ozone Season allowance in the order in which the units are listed and will repeat this increase process as necessary, until the total allocations of such new unit set-aside equal the total amount of such new unit set-aside.

(b) For each control period in 2012 and thereafter and for the TR NO_X Ozone Season units located in Indian country within the borders of each State, the Administrator will allocate TR NO_X Ozone Season allowances to the TR NO_X Ozone Season units as follows:

(1) The TR NO_X Ozone Season allowances will be allocated to the following TR NO_X Ozone Season units, except as provided in paragraph (b)(10) of this section:

(i) TR NO_X Ozone Season units that are not allocated an amount of TR NO_X Ozone Season allowances in the notice of data availability issued under § 97.511(a)(1); or

(ii) For purposes of paragraph (b)(9) of this section, TR NO_X Ozone Season units under § 97.511(c)(1)(ii) whose allocation of an amount of TR NO_X Ozone Season allowances for such control period in the notice of data availability issued under § 97.511(b)(2)(ii)(B) is covered by § 97.511(c)(2) or (3).

(2) The Administrator will establish a separate Indian country new unit set-aside for the State for each such control period. Each such Indian country new unit set-aside will be allocated TR NO_X Ozone Season allowances in an amount equal to the applicable amount of tons of NO_X emissions as set forth in § 97.510(a) and will be allocated additional TR NO_X Ozone Season allowances (if any) in accordance with § 97.511(c)(5).

(3) The Administrator will determine, for each TR NO_X Ozone Season unit described in paragraph (b)(1) of this section, an allocation of TR NO_X Ozone Season allowances for the later of the following control periods and for each subsequent control period:

(i) The control period in 2012; and

(ii) The first control period after the control period in which the TR NO_X Ozone Season unit commences commercial operation.

(4)(i) The allocation to each TR NO_X Ozone Season unit described in paragraph (b)(1)(i) of this section and for each control period described in paragraph (b)(3) of this section will be an amount equal to the unit's total tons of NO_X emissions during the immediately preceding control period.

(ii) The Administrator will adjust the allocation amount in paragraph (b)(4)(i) in accordance with paragraphs (b)(5) through (7) and (12) of this section.

(5) The Administrator will calculate the sum of the TR NO_X Ozone Season allowances determined for all such TR NO_X Ozone Season units under paragraph (b)(4)(i) of this section in Indian country within the borders of the State for such control period.

(6) If the amount of TR NO_X Ozone Season allowances in the Indian country new unit set-aside for the State for such control period is greater than or equal to the sum under paragraph (b)(5) of this section, then the Administrator will allocate the amount of TR NO_X Ozone Season allowances determined for each such TR NO_X Ozone Season unit under paragraph (b)(4)(i) of this section.

(7) If the amount of TR NO_X Ozone Season allowances in the Indian country new unit set-aside for the State for such control period is less than the sum under paragraph (b)(5) of this section, then the Administrator will allocate to each such TR NO_X Ozone Season unit the amount of the TR NO_X Ozone Season allowances determined under paragraph (b)(4)(i) of this section for the unit, multiplied by the amount of TR NO_X Ozone Season allowances in the Indian country new unit set-aside for such control period, divided by the sum under paragraph (b)(5) of this section, and rounded to the nearest allowance.

(8) The Administrator will notify the public, through the promulgation of the notices of data availability described in § 97.511(b)(2)(i) and (ii), of the amount of TR NO_X Ozone Season allowances allocated under paragraphs (b)(2) through (7) and (12) of this section for such control period to each TR NO_X Ozone Season unit eligible for such allocation.

(9) If, after completion of the procedures under paragraphs (b)(5) through (8) of this section for such control period, any unallocated TR NO_X Ozone Season allowances remain in the Indian country new unit set-aside for the State for such control period, the Administrator will allocate such TR NO_X Ozone Season allowances as follows—

(i) The Administrator will determine, for each unit described in paragraph (b)(1) of this section that commenced commercial operation during the period starting May 1 of the year before the year of such control period and ending August 31 of year of such control period, the positive difference (if any) between the unit's emissions during such control period and the amount of TR NO_X Ozone Season allowances referenced in the notice of data availability required under § 97.511(b)(2)(ii) for the unit for such control period;

(ii) The Administrator will determine the sum of the positive differences determined under paragraph (b)(9)(i) of this section;

(iii) If the amount of unallocated TR NO_X Ozone Season allowances remaining in the Indian country new unit set-aside for the State for such control period is greater than or equal to the sum determined under paragraph (b)(9)(ii) of this section, then the Administrator will allocate the amount of TR NO_X Ozone Season allowances determined for each such TR NO_X Ozone Season unit under paragraph (b)(9)(i) of this section; and

(iv) If the amount of unallocated TR NO_X Ozone Season allowances remaining in the Indian country new unit set-aside for the State for such control period is less than the sum under paragraph (b)(9)(ii) of this section, then the Administrator will allocate to each such TR NO_X Ozone Season unit the amount of the TR NO_X Ozone Season allowances determined under paragraph (b)(9)(i) of this section for the unit, multiplied by the amount of unallocated TR NO_X Ozone Season allowances remaining in the Indian country new unit set-aside for such control period, divided by the sum under paragraph (b)(9)(ii) of this section, and rounded to the nearest allowance.

(10) If, after completion of the procedures under paragraphs (b)(9) and (12) of this section for such control period, any unallocated TR NO_X Ozone Season allowances remain in the Indian country new unit set-aside for the State for such control period, the Administrator will:

(i) Transfer such unallocated TR NO_X Ozone Season allowances to the new unit set-aside for the State for such control period; or

(ii) If the State has a SIP revision approved under § 52.38(b)(4) or (5) covering such control period, include such unallocated TR NO_X Ozone Season allowances in the portion of the State NO_X Ozone Season trading budget that may be allocated for such control period in accordance with such SIP revision.

(11) The Administrator will notify the public, through the promulgation of the notices of data availability described in § 97.511(b)(2)(iii), (iv), and (v), of the amount of TR NO_X Ozone Season allowances allocated under paragraphs (b)(9), (10), and (12) of this section for such control period to each TR NO_X Ozone Season unit eligible for such allocation.

(12)(i) Notwithstanding the requirements of paragraphs (b)(2) through (11) of this section, if the calculations of allocations of an Indian country new unit set-aside for a control period in a given year under paragraph (b)(7) of this section, paragraphs (b)(6) and (9)(iv) of this section, or paragraphs (b)(6), (9)(iii), and (10) of this section would otherwise result in total allocations of such Indian country new unit set-aside exceeding the total amount of such Indian country new unit set-aside, then the Administrator will adjust the results of the calculations under paragraph (b)(7), (9)(iv), or (10) of this section, as applicable, as follows. The Administrator will list the TR NO_X Ozone Season units in descending order based on the amount of such units' allocations under paragraph (b)(7), (9)(iv), or (10) of this section, as applicable, and, in cases of equal allocation amounts, in alphabetical order of the relevant source's name and numerical order of the relevant unit's identification number, and will reduce each unit's allocation under paragraph (b)(7), (9)(iv), or (10) of this section, as applicable, by one TR NO_X Ozone Season allowance (but not below zero) in the order in which the units are listed and will repeat this reduction process as necessary, until the total allocations of such Indian country new unit set-aside equal the total amount of such Indian country new unit set-aside.

(ii) Notwithstanding the requirements of paragraphs (b)(10) and (11) of this section, if the calculations of allocations of an Indian country new unit set-aside for a control period in a given year under paragraphs (b)(6), (9)(iii), and (10) of this section would otherwise result in a total allocations of such Indian country new unit set-aside less than the total amount of such Indian country new unit set-aside, then the Administrator will adjust the results of the calculations under paragraph (b)(10) of this section, as follows. The Administrator will list the TR NO_X Ozone Season units in descending order based on the amount of such units' allocations under paragraph (b)(10) of this section and, in cases of equal allocation amounts, in alphabetical order of the relevant source's name and numerical order of the relevant unit's identification number, and will increase each unit's allocation under paragraph (b)(10) of this section by one TR NO_X Ozone Season allowance in the order in which the units are listed and will repeat this increase process as necessary, until the total allocations of such Indian country new unit set-aside equal the total amount of such Indian country new unit set-aside.

§ 97.513 Authorization of designated representative and alternate designated representative.

(a) Except as provided under § 97.515, each TR NO_X Ozone Season source, including all TR NO_X Ozone Season units at the source, shall have one and only one designated representative, with regard to all matters under the TR NO_X Ozone Season Trading Program.

(1) The designated representative shall be selected by an agreement binding on the owners and operators of the source and all TR NO_X Ozone Season units at the source and shall act in accordance with the certification statement in § 97.516(a)(4)(iii).

(2) Upon and after receipt by the Administrator of a complete certificate of representation under § 97.516:

(i) The designated representative shall be authorized and shall represent and, by his or her representations, actions, inactions, or submissions, legally bind each owner and operator of the source and each TR NO_X Ozone Season unit at the source in all matters pertaining to the TR NO_X Ozone Season Trading Program, notwithstanding any agreement between the designated representative and such owners and operators; and

(ii) The owners and operators of the source and each TR NO_X Ozone Season unit at the source shall be bound by any decision or order issued to the designated representative by the Administrator regarding the source or any such unit.

(b) Except as provided under § 97.515, each TR NO_X Ozone Season source may have one and only one alternate designated representative, who may act on behalf of the designated representative. The agreement by which the alternate designated representative is selected shall include a procedure for authorizing the alternate designated representative to act in lieu of the designated representative.

(1) The alternate designated representative shall be selected by an agreement binding on the owners and operators of the source and all TR NO_X Ozone Season units at the source and shall act in accordance with the certification statement in § 97.516(a)(4)(iii).

(2) Upon and after receipt by the Administrator of a complete certificate of representation under § 97.516,

(i) The alternate designated representative shall be authorized;

(ii) Any representation, action, inaction, or submission by the alternate designated representative shall be deemed to be a representation, action, inaction, or submission by the designated representative; and

(iii) The owners and operators of the source and each TR NO_X Ozone Season unit at the source shall be bound by any decision or order issued to the alternate designated representative by the Administrator regarding the source or any such unit.

(c) Except in this section, § 97.502, and §§ 97.514 through 97.518, whenever the term ''designated representative'' (as distinguished from the term ''common designated representative'') is used in this subpart, the term shall be construed to include the designated representative or any alternate designated representative.

§ 97.514 Responsibilities of designated representative and alternate designated representative.

(a) Except as provided under § 97.518 concerning delegation of authority to make submissions, each submission under the TR NO_X Ozone Season Trading Program shall be made, signed, and certified by the designated representative or alternate designated representative for each TR NO_X Ozone Season source and TR NO_X Ozone Season unit for which the submission is made. Each such submission shall include the following certification statement by the designated representative or alternate designated representative: ''I am authorized to make this submission on behalf of the owners and operators of the source or units for which the submission is made. I certify under penalty of law that I have personally examined, and am familiar with, the statements and information submitted in this document and all its attachments. Based on my inquiry of those individuals with primary responsibility for obtaining the information, I certify that the statements and information are to the best of my knowledge and belief true, accurate, and complete. I am aware that there are significant penalties for submitting false statements and information or omitting required statements and information, including the possibility of fine or imprisonment.''

(b) The Administrator will accept or act on a submission made for a TR NO_X Ozone Season source or a TR NO_X Ozone Season unit only if the

submission has been made, signed, and certified in accordance with paragraph (a) of this section and § 97.518.

§ 97.515 Changing designated representative and alternate designated representative; changes in owners and operators; changes in units at the source.

(a) *Changing designated representative.* The designated representative may be changed at any time upon receipt by the Administrator of a superseding complete certificate of representation under § 97.516. Notwithstanding any such change, all representations, actions, inactions, and submissions by the previous designated representative before the time and date when the Administrator receives the superseding certificate of representation shall be binding on the new designated representative and the owners and operators of the TR NO_X Ozone Season source and the TR NO_X Ozone Season units at the source.

(b) *Changing alternate designated representative.* The alternate designated representative may be changed at any time upon receipt by the Administrator of a superseding complete certificate of representation under § 97.516. Notwithstanding any such change, all representations, actions, inactions, and submissions by the previous alternate designated representative before the time and date when the Administrator receives the superseding certificate of representation shall be binding on the new alternate designated representative, the designated representative, and the owners and operators of the TR NO_X Ozone Season source and the TR NO_X Ozone Season units at the source.

(c) *Changes in owners and operators.* (1) In the event an owner or operator of a TR NO_X Ozone Season source or a TR NO_X Ozone Season unit at the source is not included in the list of owners and operators in the certificate of representation under § 97.516, such owner or operator shall be deemed to be subject to and bound by the certificate of representation, the representations, actions, inactions, and submissions of the designated representative and any alternate designated representative of the source or unit, and the decisions and orders of the Administrator, as if the owner or operator were included in such list.

(2) Within 30 days after any change in the owners and operators of a TR NO_X Ozone Season source or a TR NO_X Ozone Season unit at the source, including the addition or removal of an owner or operator, the designated representative or any alternate designated representative shall submit a revision to the certificate of representation under § 97.516 amending the list of owners and operators to reflect the change.

(d) *Changes in units at the source.* Within 30 days of any change in which units are located at a TR NO_X Ozone Season source (including the addition or removal of a unit), the designated representative or any alternate designated representative shall submit a certificate of representation under § 97.516 amending the list of units to reflect the change.

(1) If the change is the addition of a unit that operated (other than for purposes of testing by the manufacturer before initial installation) before being located at the source, then the certificate of representation shall identify, in a format prescribed by the Administrator, the entity from whom the unit was purchased or otherwise obtained (including name, address, telephone number, and facsimile number (if any)), the date on which the unit was purchased or otherwise obtained, and the date on which the unit became located at the source.

(2) If the change is the removal of a unit, then the certificate of representation shall identify, in a format prescribed by the Administrator, the entity to which the unit was sold or that otherwise obtained the unit (including name, address, telephone number, and facsimile number (if any)), the date on which the unit was sold or otherwise obtained, and the date on which the unit became no longer located at the source.

§ 97.516 Certificate of representation.

(a) A complete certificate of representation for a designated representative or an alternate designated representative shall include the following elements in a format prescribed by the Administrator:

(1) Identification of the TR NO_X Ozone Season source, and each TR NO_X Ozone Season unit at the source, for which the certificate of representation is submitted, including source name, source category and NAICS code (or, in the absence of a NAICS code, an equivalent code), State, plant code, county, latitude and longitude, unit identification number and type, identification number and nameplate capacity (in MWe, rounded to the nearest tenth) of each generator served by each such unit, actual or projected date of commencement of commercial operation, and a statement of whether such source is located in Indian Country. If a projected date of commencement of commercial operation is provided, the actual date of commencement of commercial operation shall be provided when such information becomes available.

(2) The name, address, e-mail address (if any), telephone number, and facsimile transmission number (if any) of the designated representative and any alternate designated representative.

(3) A list of the owners and operators of the TR NO_X Ozone Season source and of each TR NO_X Ozone Season unit at the source.

(4) The following certification statements by the designated representative and any alternate designated representative—

(i) ''I certify that I was selected as the designated representative or alternate designated representative, as applicable, by an agreement binding on the owners and operators of the source and each TR NO_X Ozone Season unit at the source.''

(ii) ''I certify that I have all the necessary authority to carry out my duties and responsibilities under the TR NO_X Ozone Season Trading Program on behalf of the owners and operators of the source and of each TR NO_X Ozone Season unit at the source and that each such owner and operator shall be fully bound by my representations, actions, inactions, or submissions and by any decision or order issued to me by the Administrator regarding the source or unit.''

(iii) ''Where there are multiple holders of a legal or equitable title to, or a leasehold interest in, a TR NO_X Ozone Season unit, or where a utility or industrial customer purchases power from a TR NO_X Ozone Season unit under a life-of-the-unit, firm power contractual arrangement, I certify that: I have given a written notice of my selection as the 'designated representative' or 'alternate designated representative', as applicable, and of the agreement by which I was selected to each owner and operator of the source and of each TR NO_X Ozone Season unit at the source; and TR NO_X Ozone Season allowances and proceeds of transactions involving TR NO_X Ozone Season allowances will be deemed to be held or distributed in proportion to each holder's legal, equitable, leasehold, or contractual reservation or entitlement, except that, if such multiple holders have expressly provided for a different distribution of TR NO_X Ozone Season allowances by contract, TR NO_X Ozone Season allowances and proceeds of transactions involving TR NO_X Ozone Season allowances will be deemed to be held or distributed in accordance with the contract.''

(5) The signature of the designated representative and any alternate designated representative and the dates signed.

(b) Unless otherwise required by the Administrator, documents of agreement referred to in the certificate of representation shall not be submitted to the Administrator. The Administrator shall not be under any obligation to review or evaluate the sufficiency of such documents, if submitted.

§ 97.517 Objections concerning designated representative and alternate designated representative.

(a) Once a complete certificate of representation under § 97.516 has been submitted and received, the Administrator will rely on the certificate of representation unless and until a superseding complete certificate of representation under § 97.516 is received by the Administrator.

(b) Except as provided in paragraph (a) of this section, no objection or other communication submitted to the Administrator concerning the authorization, or any representation, action, inaction, or submission, of a designated representative or alternate designated representative shall affect any representation, action, inaction, or submission of the designated representative or alternate designated representative or the finality of any decision or order by the Administrator under the TR NO_X Ozone Season Trading Program.

(c) The Administrator will not adjudicate any private legal dispute concerning the authorization or any representation, action, inaction, or submission of any designated representative or alternate designated representative, including private legal disputes concerning the proceeds of TR NO_X Ozone Season allowance transfers.

§ 97.518 Delegation by designated representative and alternate designated representative.

(a) A designated representative may delegate, to one or more natural persons, his or her authority to make an electronic submission to the Administrator provided for or required under this subpart.

(b) An alternate designated representative may delegate, to one or more natural persons, his or her authority to make an electronic submission to the Administrator provided for or required under this subpart.

(c) In order to delegate authority to a natural person to make an electronic submission to the Administrator in accordance with paragraph (a) or (b) of this section, the designated representative or alternate designated representative, as appropriate, must submit to the Administrator a notice of delegation, in a format prescribed by the Administrator, that includes the following elements:

(1) The name, address, e-mail address, telephone number, and facsimile transmission number (if any) of such designated representative or alternate designated representative;

(2) The name, address, e-mail address, telephone number, and facsimile transmission number (if any) of each such natural person (referred to in this section as an ''agent'');

(3) For each such natural person, a list of the type or types of electronic submissions under paragraph (a) or (b) of this section for which authority is delegated to him or her; and

(4) The following certification statements by such designated representative or alternate designated representative:

(i) ''I agree that any electronic submission to the Administrator that is made by an agent identified in this notice of delegation and of a type listed for such agent in this notice of delegation and that is made when I am a designated representative or alternate designated representative, as appropriate, and before this notice of delegation is superseded by another notice of delegation under 40 CFR 97.518(d) shall be deemed to be an electronic submission by me.''

(ii) ''Until this notice of delegation is superseded by another notice of delegation under 40 CFR 97.518(d), I agree to maintain an e-mail account and to notify the Administrator immediately of any change in my e-mail address unless all delegation of authority by me under 40 CFR 97.518 is terminated.''.

(d) A notice of delegation submitted under paragraph (c) of this section shall be effective, with regard to the designated representative or alternate designated representative identified in such notice, upon receipt of such notice by the Administrator and until receipt by the Administrator of a superseding notice of delegation submitted by such designated representative or alternate designated representative, as appropriate. The superseding notice of delegation may replace any previously identified agent, add a new agent, or eliminate entirely any delegation of authority.

(e) Any electronic submission covered by the certification in paragraph (c)(4)(i) of this section and made in accordance with a notice of delegation effective under paragraph (d) of this section shall be deemed to be an electronic submission by the designated representative or alternate designated representative submitting such notice of delegation.

§ 97.519 [Reserved]

§ 97.520 Establishment of compliance accounts, assurance accounts, and general accounts.

(a) *Compliance accounts.* Upon receipt of a complete certificate of representation under § 97.516, the Administrator will establish a compliance account for the TR NO_X Ozone Season source for which the certificate of representation was submitted, unless the source already has a compliance account. The designated representative and any alternate designated representative of the source shall be the authorized account representative and the alternate authorized account representative respectively of the compliance account.

(b) *Assurance accounts.* The Administrator will establish assurance accounts for certain owners and operators and States in accordance with § 97.525(b)(3).

(c) *General accounts.* (1) Application for general account. (i) Any person may apply to open a general account, for the purpose of holding and transferring TR NO_X Ozone Season allowances, by submitting to the Administrator a complete application for a general account. Such application shall designate one and only one authorized account representative and may designate one and only one alternate authorized account representative who may act on behalf of the authorized account representative.

(A) The authorized account representative and alternate authorized account representative shall be selected by an agreement binding on the persons who have an ownership interest with respect to TR NO_X Ozone Season allowances held in the general account.

(B) The agreement by which the alternate authorized account representative is selected shall include a procedure for authorizing the alternate authorized account representative to act in lieu of the authorized account representative.

(ii) A complete application for a general account shall include the following elements in a format prescribed by the Administrator:

(A) Name, mailing address, e-mail address (if any), telephone number, and facsimile transmission number (if any) of the authorized account representative and any alternate authorized account representative;

(B) An identifying name for the general account;

(C) A list of all persons subject to a binding agreement for the authorized account representative and any alternate authorized account representative to

represent their ownership interest with respect to the TR NO_X Ozone Season allowances held in the general account;

(D) The following certification statement by the authorized account representative and any alternate authorized account representative: ''I certify that I was selected as the authorized account representative or the alternate authorized account representative, as applicable, by an agreement that is binding on all persons who have an ownership interest with respect to TR NO_X Ozone Season allowances held in the general account. I certify that I have all the necessary authority to carry out my duties and responsibilities under the TR NO_X Ozone Season Trading Program on behalf of such persons and that each such person shall be fully bound by my representations, actions, inactions, or submissions and by any decision or order issued to me by the Administrator regarding the general account.''

(E) The signature of the authorized account representative and any alternate authorized account representative and the dates signed.

(iii) Unless otherwise required by the Administrator, documents of agreement referred to in the application for a general account shall not be submitted to the Administrator. The Administrator shall not be under any obligation to review or evaluate the sufficiency of such documents, if submitted.

(2) Authorization of authorized account representative and alternate authorized account representative. (i) Upon receipt by the Administrator of a complete application for a general account under paragraph (b)(1) of this section, the Administrator will establish a general account for the person or persons for whom the application is submitted, and upon and after such receipt by the Administrator:

(A) The authorized account representative of the general account shall be authorized and shall represent and, by his or her representations, actions, inactions, or submissions, legally bind each person who has an ownership interest with respect to TR NO_X Ozone Season allowances held in the general account in all matters pertaining to the TR NO_X Ozone Season Trading Program, notwithstanding any agreement between the authorized account representative and such person.

(B) Any alternate authorized account representative shall be authorized, and any representation, action, inaction, or submission by any alternate authorized account representative shall be deemed to be a representation, action, inaction, or submission by the authorized account representative.

(C) Each person who has an ownership interest with respect to TR NO_X Ozone Season allowances held in the general account shall be bound by any decision or order issued to the authorized account representative or alternate authorized account representative by the Administrator regarding the general account.

(ii) Except as provided in paragraph (c)(5) of this section concerning delegation of authority to make submissions, each submission concerning the general account shall be made, signed, and certified by the authorized account representative or any alternate authorized account representative for the persons having an ownership interest with respect to TR NO_X Ozone Season allowances held in the general account. Each such submission shall include the following certification statement by the authorized account representative or any alternate authorized account representative: ''I am authorized to make this submission on behalf of the persons having an ownership interest with respect to the TR NO_X Ozone Season allowances held in the general account. I certify under penalty of law that I have personally examined, and am familiar with, the statements and information submitted in this document and all its attachments. Based on my inquiry of those individuals with primary responsibility for obtaining the information, I certify that the statements and information are to the best of my knowledge and belief true, accurate, and complete. I am aware that there are significant penalties for submitting false statements and information or omitting required statements and information, including the possibility of fine or imprisonment.''

(iii) Except in this section, whenever the term ''authorized account representative'' is used in this subpart, the term shall be construed to include the authorized account representative or any alternate authorized account representative.

(3) Changing authorized account representative and alternate authorized account representative; changes in persons with ownership interest. (i) The authorized account representative of a general account may be changed at any time upon receipt by the Administrator of a superseding complete application for a general account under paragraph (c)(1) of this section. Notwithstanding any such change, all representations, actions, inactions, and submissions by the previous authorized account representative before the time and date when the Administrator receives the superseding application for a general account shall be binding on the new authorized account representative and the persons with an ownership interest with respect to the TR NO_X Ozone Season allowances in the general account.

(ii) The alternate authorized account representative of a general account may be changed at any time upon receipt by the Administrator of a superseding complete application for a general account under paragraph (c)(1) of this section. Notwithstanding any such change, all representations, actions, inactions, and submissions by the previous alternate authorized account representative before the time and date when the Administrator receives the superseding application for a general account shall be binding on the new alternate authorized account representative, the authorized account representative, and the persons with an ownership interest with respect to the TR NO_X Ozone Season allowances in the general account.

(iii)(A) In the event a person having an ownership interest with respect to TR NO_X Ozone Season allowances in the general account is not included in the list of such persons in the application for a general account, such person shall be deemed to be subject to and bound by the application for a general account, the representation, actions, inactions, and submissions of the authorized account representative and any alternate authorized account representative of the account, and the decisions and orders of the Administrator, as if the person were included in such list.

(B) Within 30 days after any change in the persons having an ownership interest with respect to NO_X Ozone Season allowances in the general account, including the addition or removal of a person, the authorized account representative or any alternate authorized account representative shall submit a revision to the application for a general account amending the list of persons having an ownership interest with respect to the TR NO_X Ozone Season allowances in the general account to include the change.

(4) Objections concerning authorized account representative and alternate authorized account representative. (i) Once a complete application for a general account under paragraph (c)(1) of this section has been submitted and received, the Administrator will rely on the application unless and until a superseding complete application for a general account under paragraph (b)(1) of this section is received by the Administrator.

(ii) Except as provided in paragraph (c)(4)(i) of this section, no objection or other communication submitted to the Administrator concerning the authorization, or any representation, action, inaction, or submission of the authorized account representative or any alternate authorized account representative of a general account shall affect any representation, action, inaction, or submission of the authorized account representative or any alternate authorized account representative or the finality of any decision or order by the Administrator under the TR NO_X Ozone Season Trading Program.

(iii) The Administrator will not adjudicate any private legal dispute concerning the authorization or any representation, action, inaction, or submission of the authorized account representative or any alternate authorized account representative of a general account, including private legal disputes concerning the proceeds of TR NO_X Ozone Season allowance transfers.

(5) Delegation by authorized account representative and alternate authorized account representative. (i) An authorized account representative of a general account may delegate, to one or more natural persons, his or her authority to make an electronic submission to the Administrator provided for or required under this subpart.

(ii) An alternate authorized account representative of a general account may delegate, to one or more natural persons, his or her authority to make an electronic submission to the Administrator provided for or required under this subpart.

(iii) In order to delegate authority to a natural person to make an electronic submission to the Administrator in accordance with paragraph (c)(5)(i) or (ii) of this section, the authorized account representative or alternate authorized account representative, as appropriate, must submit to the Administrator a notice of delegation, in a format prescribed by the Administrator, that includes the following elements:

(A) The name, address, e-mail address, telephone number, and facsimile transmission number (if any) of such authorized account representative or alternate authorized account representative;

(B) The name, address, e-mail address, telephone number, and facsimile transmission number (if any) of each such natural person (referred to in this section as an ''agent'');

(C) For each such natural person, a list of the type or types of electronic submissions under paragraph (c)(5)(i) or (ii) of this section for which authority is delegated to him or her;

(D) The following certification statement by such authorized account representative or alternate authorized account representative: ''I agree that any electronic submission to the Administrator that is made by an agent identified in this notice of delegation and of a type listed for such agent in this notice of delegation and that is made when I am an authorized account representative or alternate authorized representative, as appropriate, and before this notice of delegation is superseded by another notice of delegation under 40 CFR 97.520(c)(5)(iv) shall be deemed to be an electronic submission by me.''; and

(E) The following certification statement by such authorized account representative or alternate authorized account representative: ''Until this notice of delegation is superseded by another notice of delegation under 40 CFR 97.520(c)(5)(iv), I agree to maintain an e-mail account and to notify the Administrator immediately of any change in my e-mail address unless all delegation of authority by me under 40 CFR 97.520(c)(5) is terminated.''.

(iv) A notice of delegation submitted under paragraph (c)(5)(iii) of this section shall be effective, with regard to the authorized account representative or alternate authorized account representative identified in such notice, upon receipt of such notice by the Administrator and until receipt by the Administrator of a superseding notice of delegation submitted by such authorized account representative or alternate authorized account representative, as appropriate. The superseding notice of delegation may replace any previously identified agent, add a new agent, or eliminate entirely any delegation of authority.

(v) Any electronic submission covered by the certification in paragraph (c)(5)(iii)(D) of this section and made in accordance with a notice of delegation effective under paragraph (c)(5)(iv) of this section shall be deemed to be an electronic submission by the designated representative or alternate designated representative submitting such notice of delegation.

(6) Closing a general account. (i) The authorized account representative or alternate authorized account representative of a general account may submit to the Administrator a request to close the account. Such request shall include a correctly submitted TR NO_X Ozone Season allowance transfer under § 97.522 for any TR NO_X Ozone Season allowances in the account to one or more other Allowance Management System accounts.

(ii) If a general account has no TR NO_X Ozone Season allowance transfers to or from the account for a 12-month period or longer and does not contain any TR NO_X Ozone Season allowances, the Administrator may notify the authorized account representative for the account that the account will be closed after 30 days after the notice is sent. The account will be closed after the 30-day period unless, before the end of the 30-day period, the Administrator receives a correctly submitted TR NO_X Ozone Season allowance transfer under § 97.522 to the account or a statement submitted by the authorized account representative or alternate authorized account representative demonstrating to the satisfaction of the Administrator good cause as to why the account should not be closed.

(d) *Account identification.* The Administrator will assign a unique identifying number to each account established under paragraph (a), (b), or (c) of this section.

(e) *Responsibilities of authorized account representative and alternate authorized account representative.* After the establishment of a compliance account or general account, the Administrator will accept or act on a submission pertaining to the account, including, but not limited to, submissions concerning the deduction or transfer of TR NO_X Ozone Season allowances in the account, only if the submission has been made, signed, and certified in accordance with §§ 97.514(a) and 97.518 or paragraphs (c)(2)(ii) and (c)(5) of this section.

§ 97.521 Recordation of TR NO_X Ozone Season allowance allocations and auction results.

(a) By November 7, 2011, the Administrator will record in each TR NO_X Ozone Season source's compliance account the TR NO_X Ozone Season allowances allocated to the TR NO_X Ozone Season units at the source in accordance with § 97.511(a) for the control period in 2012.

(b) By November 7, 2011, the Administrator will record in each TR NO_X Ozone Season source's compliance account the TR NO_X Ozone Season allowances allocated to the TR NO_X Ozone Season units at the source in accordance with § 97.511(a) for the control period in 2013, unless the State in which the source is located notifies the Administrator in writing by October 17, 2011 of the State's intent to submit to the Administrator a complete SIP revision by April 1, 2012 meeting the

requirements of § 52.38(b)(3)(i) through (iv) of this chapter.

(1) If, by April 1, 2012, the State does not submit to the Administrator such complete SIP revision, the Administrator will record by April 15, 2012 in each TR NO_X Ozone Season source's compliance account the TR NO_X Ozone Season allowances allocated to the TR NO_X Ozone Season units at the source in accordance with § 97.511(a) for the control period in 2013.

(2) If the State submits to the Administrator by April 1, 2012, and the Administrator approves by October 1, 2012, such complete SIP revision, the Administrator will record by October 1, 2012 in each TR NO_X Ozone Season source's compliance account the TR NO_X Ozone Season allowances allocated to the TR NO_X Ozone Season units at the source as provided in such approved, complete SIP revision for the control period in 2013.

(3) If the State submits to the Administrator by April 1, 2012, and the Administrator does not approve by October 1, 2012, such complete SIP revision, the Administrator will record by October 1, 2012 in each TR NO_X Ozone Season source's compliance account the TR NO_X Ozone Season allowances allocated to the TR NO_X Ozone Season units at the source in accordance with § 97.511(a) for the control period in 2013.

(c) By July 1, 2013, the Administrator will record in each TR NO_X Ozone Season source's compliance account the TR NO_X Ozone Season allowances allocated to the TR NO_X Ozone Season units at the source, or in each appropriate Allowance Management System account the TR NO_X Ozone Season allowances auctioned to TR NO_X Ozone Season units, in accordance with § 97.511(a), or with a SIP revision approved under § 52.38(b)(4) or (5) of this chapter, for the control period in 2014 and 2015.

(d) By July 1, 2014, the Administrator will record in each TR NO_X Ozone Season source's compliance account the TR NO_X Ozone Season allowances allocated to the TR NO_X Ozone Season units at the source, or in each appropriate Allowance Management System account the TR NO_X Ozone Season allowances auctioned to TR NO_X Ozone Season units, in accordance with § 97.511(a), or with a SIP revision approved under § 52.38(b)(4) or (5) of this chapter, for the control period in 2016 and 2017.

(e) By July 1, 2015, the Administrator will record in each TR NO_X Ozone Season source's compliance account the TR NO_X Ozone Season allowances allocated to the TR NO_X Ozone Season units at the source, or in each appropriate Allowance Management System account the TR NO_X Ozone Season allowances auctioned to TR NO_X Ozone Season units, in accordance with § 97.511(a), or with a SIP revision approved under § 52.38(b)(4) or (5) of this chapter, for the control period in 2018 and 2019.

(f) By July 1, 2016 and July 1 of each year thereafter, the Administrator will record in each TR NO_X Ozone Season source's compliance account the TR NO_X Ozone Season allowances allocated to the TR NO_X Ozone Season units at the source, or in each appropriate Allowance Management System account the TR NO_X Ozone Season allowances auctioned to TR NO_X Ozone Season units, in accordance with § 97.511(a), or with a SIP revision approved under § 52.38(b)(4) or (5) of this chapter, for the control period in the fourth year after the year of the applicable recordation deadline under this paragraph.

(g) By August 1, 2012 and August 1 of each year thereafter, the Administrator will record in each TR NO_X Ozone Season source's compliance account the TR NO_X Ozone Season allowances allocated to the TR NO_X Ozone Season units at the source, or in each appropriate Allowance Management System account the TR NO_X Ozone Season allowances auctioned to TR NO_X Ozone Season units, in accordance with § 97.512(a)(2) through (8) and (12), or with a SIP revision approved under § 52.38(b)(4) or (5) of this chapter, for the control period in the year of the applicable recordation deadline under this paragraph.

(h) By August 1, 2012 and August 1 of each year thereafter, the Administrator will record in each TR NO_X Ozone Season source's compliance account the TR NO_X Ozone Season allowances allocated to the TR NO_X Ozone Season units at the source in accordance with § 97.512(b)(2) through (8) and (12) for the control period in the year of the applicable recordation deadline under this paragraph.

(i) By November 15, 2012 and November 15 of each year thereafter, the Administrator will record in each TR NO_X Ozone Season source's compliance account the TR NO_X Ozone Season allowances allocated to the TR NO_X Ozone Season units at the source in accordance with § 97.512(a)(9) through (12), for the control period in the year of the applicable recordation deadline under this paragraph.

(j) By the date on which any allocation or auction results, other than an allocation or auction results described in paragraphs (a) through (i) of this section, of TR NO_X Ozone Season allowances to a recipient is made by or are submitted to the Administrator in accordance with § 97.511 or § 97.512 or with a SIP revision approved under § 52.38(b)(4) or (5) of this chapter, the Administrator will record such allocation or auction results in the appropriate Allowance Management System account.

(k) When recording the allocation or auction of TR NO_X Ozone Season allowances to a TR NO_X Ozone Season unit or other entity in an Allowance Management System account, the Administrator will assign each TR NO_X Ozone Season allowance a unique identification number that will include digits identifying the year of the control period for which the TR NO_X Ozone Season allowance is allocated or auctioned.

§ 97.522 Submission of TR NO_X Ozone Season allowance transfers.

(a) An authorized account representative seeking recordation of a TR NO_X Ozone Season allowance transfer shall submit the transfer to the Administrator.

(b) A TR NO_X Ozone Season allowance transfer shall be correctly submitted if:

(1) The transfer includes the following elements, in a format prescribed by the Administrator:

(i) The account numbers established by the Administrator for both the transferor and transferee accounts;

(ii) The serial number of each TR NO_X Ozone Season allowance that is in the transferor account and is to be transferred; and

(iii) The name and signature of the authorized account representative of the transferor account and the date signed; and

(2) When the Administrator attempts to record the transfer, the transferor account includes each TR NO_X Ozone Season allowance identified by serial number in the transfer.

§ 97.523 Recordation of TR NO_X Ozone Season allowance transfers.

(a) Within 5 business days (except as provided in paragraph (b) of this section) of receiving a TR NO_X Ozone Season allowance transfer that is correctly submitted under § 97.522, the Administrator will record a TR NO_X Ozone Season allowance transfer by moving each TR NO_X Ozone Season allowance from the transferor account to the transferee account as specified in the transfer.

(b) A TR NO_X Ozone Season allowance transfer to or from a

compliance account that is submitted for recordation after the allowance transfer deadline for a control period and that includes any TR NO_X Ozone Season allowances allocated for any control period before such allowance transfer deadline will not be recorded until after the Administrator completes the deductions from such compliance account under § 97.524 for the control period immediately before such allowance transfer deadline.

(c) Where a TR NO_X Ozone Season allowance transfer is not correctly submitted under § 97.522, the Administrator will not record such transfer.

(d) Within 5 business days of recordation of a TR NO_X Ozone Season allowance transfer under paragraphs (a) and (b) of the section, the Administrator will notify the authorized account representatives of both the transferor and transferee accounts.

(e) Within 10 business days of receipt of a TR NO_X Ozone Season allowance transfer that is not correctly submitted under § 97.522, the Administrator will notify the authorized account representatives of both accounts subject to the transfer of:

(1) A decision not to record the transfer, and

(2) The reasons for such non-recordation.

§ 97.524 Compliance with TR NO_X Ozone Season emissions limitation.

(a) *Availability for deduction for compliance.* TR NO_X Ozone Season allowances are available to be deducted for compliance with a source's TR NO_X Ozone Season emissions limitation for a control period in a given year only if the TR NO_X Ozone Season allowances:

(1) Were allocated for such control period or a control period in a prior year; and

(2) Are held in the source's compliance account as of the allowance transfer deadline for such control period.

(b) *Deductions for compliance.* After the recordation, in accordance with § 97.523, of TR NO_X Ozone Season allowance transfers submitted by the allowance transfer deadline for a control period in a given year, the Administrator will deduct from each source's compliance account TR NO_X Ozone Season allowances available under paragraph (a) of this section in order to determine whether the source meets the TR NO_X Ozone Season emissions limitation for such control period, as follows:

(1) Until the amount of TR NO_X Ozone Season allowances deducted equals the number of tons of total NO_X emissions from all TR NO_X Ozone Season units at the source for such control period; or

(2) If there are insufficient TR NO_X Ozone Season allowances to complete the deductions in paragraph (b)(1) of this section, until no more TR NO_X Ozone Season allowances available under paragraph (a) of this section remain in the compliance account.

(c)(1) *Identification of TR NO_X Ozone Season allowances by serial number.* The authorized account representative for a source's compliance account may request that specific TR NO_X Ozone Season allowances, identified by serial number, in the compliance account be deducted for emissions or excess emissions for a control period in a given year in accordance with paragraph (b) or (d) of this section. In order to be complete, such request shall be submitted to the Administrator by the allowance transfer deadline for such control period and include, in a format prescribed by the Administrator, the identification of the TR NO_X Ozone Season source and the appropriate serial numbers.

(2) *First-in, first-out.* The Administrator will deduct TR NO_X Ozone Season allowances under paragraph (b) or (d) of this section from the source's compliance account in accordance with a complete request under paragraph (c)(1) of this section or, in the absence of such request or in the case of identification of an insufficient amount of TR NO_X Ozone Season allowances in such request, on a first-in, first-out accounting basis in the following order:

(i) Any TR NO_X Ozone Season allowances that were allocated to the units at the source and not transferred out of the compliance account, in the order of recordation; and then

(ii) Any TR NO_X Ozone Season allowances that were allocated to any unit and transferred to and recorded in the compliance account pursuant to this subpart, in the order of recordation.

(d) *Deductions for excess emissions.* After making the deductions for compliance under paragraph (b) of this section for a control period in a year in which the TR NO_X Ozone Season source has excess emissions, the Administrator will deduct from the source's compliance account an amount of TR NO_X Ozone Season allowances, allocated for a control period in a prior year or the control period in the year of the excess emissions or in the immediately following year, equal to two times the number of tons of the source's excess emissions.

(e) *Recordation of deductions.* The Administrator will record in the appropriate compliance account all deductions from such an account under paragraphs (b) and (d) of this section.

§ 97.525 Compliance with TR NO_X Ozone Season assurance provisions.

(a) *Availability for deduction.* TR NO_X Ozone Season allowances are available to be deducted for compliance with the TR NO_X Ozone Season assurance provisions for a control period in a given year by the owners and operators of a group of one or more TR NO_X Ozone Season sources and units in a State (and Indian country within the borders of such State) only if the TR NO_X Ozone Season allowances:

(1) Were allocated for a control period in a prior year or the control period in the given year or in the immediately following year; and

(2) Are held in the assurance account, established by the Administrator for such owners and operators of such group of TR NO_X Ozone Season sources and units in such State (and Indian country within the borders of such State) under paragraph (b)(3) of this section, as of the deadline established in paragraph (b)(4) of this section.

(b) *Deductions for compliance.* The Administrator will deduct TR NO_X Ozone Season allowances available under paragraph (a) of this section for compliance with the TR NO_X Ozone Season assurance provisions for a State for a control period in a given year in accordance with the following procedures:

(1) By June 1, 2013 and June 1 of each year thereafter, the Administrator will:

(i) Calculate, for each State (and Indian country within the borders of such State), the total NO_X emissions from all TR NO_X Ozone Season units at TR NO_X Ozone Season sources in the State (and Indian country within the borders of such State) during the control period in the year before the year of this calculation deadline and the amount, if any, by which such total NO_X emissions exceed the State assurance level as described in § 97.506(c)(2)(iii); and

(ii) Promulgate a notice of data availability of the results of the calculations required in paragraph (b)(1)(i) of this section, including separate calculations of the NO_X emissions from each TR NO_X Ozone Season source.

(2) For each notice of data availability required in paragraph (b)(1)(ii) of this section and for any State (and Indian country within the borders of such State) identified in such notice as having TR NO_X Ozone Season units with total NO_X emissions exceeding the State assurance level for a control

period in a given year, as described in § 97.506(c)(2)(iii):

(i) By July 1 immediately after the promulgation of such notice, the designated representative of each TR NO_X Ozone Season source in each such State (and Indian country within the borders of such State) shall submit a statement, in a format prescribed by the Administrator, providing for each TR NO_X Ozone Season unit (if any) at the source that operates during, but is not allocated an amount of TR NO_X Ozone Season allowances for, such control period, the unit's allowable NO_X emission rate for such control period and, if such rate is expressed in lb per mmBtu, the unit's heat rate.

(ii) By August 1 immediately after the promulgation of such notice, the Administrator will calculate, for each such State (and Indian country within the borders of such State) and such control period and each common designated representative for such control period for a group of one or more TR NO_X Ozone Season sources and units in the State (and Indian country within the borders of such State), the common designated representative's share of the total NO_X emissions from all TR NO_X Ozone Season units at TR NO_X Ozone Season sources in the State (and Indian country within the borders of such State), the common designated representative's assurance level, and the amount (if any) of TR NO_X Ozone Season allowances that the owners and operators of such group of sources and units must hold in accordance with the calculation formula in § 97.506(c)(2)(i) and will promulgate a notice of data availability of the results of these calculations.

(iii) The Administrator will provide an opportunity for submission of objections to the calculations referenced by the notice of data availability required in paragraph (b)(2)(ii) of this section and the calculations referenced by the relevant notice of data availability required in paragraph (b)(1)(i) of this section.

(A) Objections shall be submitted by the deadline specified in such notice and shall be limited to addressing whether the calculations referenced in the relevant notice required under paragraph (b)(1)(ii) of this section and referenced in the notice required under paragraph (b)(2)(ii) of this section are in accordance with § 97.506(c)(2)(iii), §§ 97.506(b) and 97.530 through 97.535, the definitions of ''common designated representative'', ''common designated representative's assurance level'', and ''common designated representative's share'' in § 97.502, and the calculation formula in § 97.506(c)(2)(i).

(B) The Administrator will adjust the calculations to the extent necessary to ensure that they are in accordance with the provisions referenced in paragraph (b)(2)(iii)(A) of this section. By October 1 immediately after the promulgation of such notice, the Administrator will promulgate a notice of data availability of any adjustments that the Administrator determines to be necessary and the reasons for accepting or rejecting any objections submitted in accordance with paragraph (b)(2)(iii)(A) of this section.

(3) For any State (and Indian country within the borders of such State) referenced in each notice of data availability required in paragraph (b)(2)(iii)(B) of this section as having TR NO_X Ozone Season units with total NO_X emissions exceeding the State assurance level for a control period in a given year, the Administrator will establish one assurance account for each set of owners and operators referenced, in the notice of data availability required under paragraph (b)(2)(iii)(B) of this section, as all of the owners and operators of a group of TR NO_X Ozone Season sources and units in the State (and Indian country within the borders of such State) having a common designated representative for such control period and as being required to hold TR NO_X Ozone Season allowances.

(4)(i) As of midnight of November 1 immediately after the promulgation of each notice of data availability required in paragraph (b)(2)(iii)(B) of this section, the owners and operators described in paragraph (b)(3) of this section shall hold in the assurance account established for the them and for the appropriate TR NO_X Ozone Season sources, TR NO_X Ozone Season units, and State (and Indian country within the borders of such State) under paragraph (b)(3) of this section a total amount of TR NO_X Ozone Season allowances, available for deduction under paragraph (a) of this section, equal to the amount such owners and operators are required to hold with regard to such sources, units and State (and Indian country within the borders of such State) as calculated by the Administrator and referenced in such notice.

(ii) Notwithstanding the allowance-holding deadline specified in paragraph (b)(4)(i) of this section, if November 1 is not a business day, then such allowance-holding deadline shall be midnight of the first business day thereafter.

(5) After November 1 (or the date described in paragraph (b)(4)(ii) of this section) immediately after the promulgation of each notice of data availability required in paragraph (b)(2)(iii)(B) of this section and after the recordation, in accordance with § 97.523, of TR NO_X Ozone Season allowance transfers submitted by midnight of such date, the Administrator will determine whether the owners and operators described in paragraph (b)(3) of this section hold, in the assurance account for the appropriate TR NO_X Ozone Season sources, TR NO_X Ozone Season units, and State (and Indian country within the borders of such State) established under paragraph (b)(3) of this section, the amount of TR NO_X Ozone Season allowances available under paragraph (a) of this section that the owners and operators are required to hold with regard to such sources, units, and State (and Indian country within the borders of such State) as calculated by the Administrator and referenced in the notice required in paragraph (b)(2)(iii)(B) of this section.

(6) Notwithstanding any other provision of this subpart and any revision, made by or submitted to the Administrator after the promulgation of the notice of data availability required in paragraph (b)(2)(iii)(B) of this section for a control period in a given year, of any data used in making the calculations referenced in such notice, the amounts of TR NO_X Ozone Season allowances that the owners and operators are required to hold in accordance with § 97.506(c)(2)(i) for such control period shall continue to be such amounts as calculated by the Administrator and referenced in such notice required in paragraph (b)(2)(iii)(B) of this section, except as follows:

(i) If any such data are revised by the Administrator as a result of a decision in or settlement of litigation concerning such data on appeal under part 78 of this chapter of such notice, or on appeal under section 307 of the Clean Air Act of a decision rendered under part 78 of this chapter on appeal of such notice, then the Administrator will use the data as so revised to recalculate the amounts of TR NO_X Ozone Season allowances that owners and operators are required to hold in accordance with the calculation formula in § 97.506(c)(2)(i) for such control period with regard to the TR NO_X Ozone Season sources, TR NO_X Ozone Season units, and State (and Indian country within the borders of such State) involved, provided that such litigation under part 78 of this chapter, or the proceeding under part 78 of this chapter that resulted in the decision appealed in such litigation under section 307 of the Clean Air Act, was initiated no later than 30 days after

promulgation of such notice required in paragraph (b)(2)(iii)(B) of this section.

(ii) If any such data are revised by the owners and operators of a TR NO_X Ozone Season source and TR NO_X Ozone Season unit whose designated representative submitted such data under paragraph (b)(2)(i) of this section, as a result of a decision in or settlement of litigation concerning such submission, then the Administrator will use the data as so revised to recalculate the amounts of TR NO_X Ozone Season allowances that owners and operators are required to hold in accordance with the calculation formula in § 97.506(c)(2)(i) for such control period with regard to the TR NO_X Ozone Season sources, TR NO_X Ozone Season units, and State (and Indian country within the borders of such State) involved, provided that such litigation was initiated no later than 30 days after promulgation of such notice required in paragraph (b)(2)(iii)(B) of this section.

(iii) If the revised data are used to recalculate, in accordance with paragraphs (b)(6)(i) and (ii) of this section, the amount of TR NO_X Ozone Season allowances that the owners and operators are required to hold for such control period with regard to the TR NO_X Ozone Season sources, TR NO_X Ozone Season units, and State (and Indian country within the borders of such State) involved—

(A) Where the amount of TR NO_X Ozone Season allowances that the owners and operators are required to hold increases as a result of the use of all such revised data, the Administrator will establish a new, reasonable deadline on which the owners and operators shall hold the additional amount of TR NO_X Ozone Season allowances in the assurance account established by the Administrator for the appropriate TR NO_X Ozone Season sources, TR NO_X Ozone Season units, and State (and Indian country within the borders of such State) under paragraph (b)(3) of this section. The owners' and operators' failure to hold such additional amount, as required, before the new deadline shall not be a violation of the Clean Air Act. The owners' and operators' failure to hold such additional amount, as required, as of the new deadline shall be a violation of the Clean Air Act. Each TR NO_X Ozone Season allowance that the owners and operators fail to hold as required as of the new deadline, and each day in such control period, shall be a separate violation of the Clean Air Act.

(B) For the owners and operators for which the amount of TR NO_X Ozone Season allowances required to be held decreases as a result of the use of all such revised data, the Administrator will record, in all accounts from which TR NO_X Ozone Season allowances were transferred by such owners and operators for such control period to the assurance account established by the Administrator for the appropriate at TR NO_X Ozone Season sources, TR NO_X Ozone Season units, and State (and Indian country within the borders of such State) under paragraph (b)(3) of this section, a total amount of the TR NO_X Ozone Season allowances held in such assurance account equal to the amount of the decrease. If TR NO_X Ozone Season allowances were transferred to such assurance account from more than one account, the amount of TR NO_X Ozone Season allowances recorded in each such transferor account will be in proportion to the percentage of the total amount of TR NO_X Ozone Season allowances transferred to such assurance account for such control period from such transferor account.

(C) Each TR NO_X Ozone Season allowance held under paragraph (b)(6)(iii)(A) of this section as a result of recalculation of requirements under the TR NO_X Ozone Season assurance provisions for such control period must be a TR NO_X Ozone Season allowance allocated for a control period in a year before or the year immediately following, or in the same year as, the year of such control period.

§ 97.526 Banking.

(a) A TR NO_X Ozone Season allowance may be banked for future use or transfer in a compliance account or a general account in accordance with paragraph (b) of this section.

(b) Any TR NO_X Ozone Season allowance that is held in a compliance account or a general account will remain in such account unless and until the TR NO_X Ozone Season allowance is deducted or transferred under § 97.511(c), § 97.523, § 97.524, § 97.525, § 97.527, or § 97.528.

§ 97.527 Account error.

The Administrator may, at his or her sole discretion and on his or her own motion, correct any error in any Allowance Management System account. Within 10 business days of making such correction, the Administrator will notify the authorized account representative for the account.

§ 97.528 Administrator's action on submissions.

(a) The Administrator may review and conduct independent audits concerning any submission under the TR NO_X Ozone Season Trading Program and make appropriate adjustments of the information in the submission.

(b) The Administrator may deduct TR NO_X Ozone Season allowances from or transfer TR NO_X Ozone Season allowances to a compliance account or an assurance account, based on the information in a submission, as adjusted under paragraph (a)(1) of this section, and record such deductions and transfers.

§ 97.529 [Reserved]

§ 97.530 General monitoring, recordkeeping, and reporting requirements.

The owners and operators, and to the extent applicable, the designated representative, of a TR NO_X Ozone Season unit, shall comply with the monitoring, recordkeeping, and reporting requirements as provided in this subpart and subpart H of part 75 of this chapter. For purposes of applying such requirements, the definitions in § 97.502 and in § 72.2 of this chapter shall apply, the terms ''affected unit,'' ''designated representative,'' and ''continuous emission monitoring system'' (or ''CEMS'') in part 75 of this chapter shall be deemed to refer to the terms ''TR NO_X Ozone Season unit,'' ''designated representative,'' and ''continuous emission monitoring system'' (or ''CEMS'') respectively as defined in § 97.502, and the term ''newly affected unit'' shall be deemed to mean ''newly affected TR NO_X Ozone Season unit''. The owner or operator of a unit that is not a TR NO_X Ozone Season unit but that is monitored under § 75.72(b)(2)(ii) of this chapter shall comply with the same monitoring, recordkeeping, and reporting requirements as a TR NO_X Ozone Season unit.

(a) *Requirements for installation, certification, and data accounting.* The owner or operator of each TR NO_X Ozone Season unit shall:

(1) Install all monitoring systems required under this subpart for monitoring NO_X mass emissions and individual unit heat input (including all systems required to monitor NO_X emission rate, NO_X concentration, stack gas moisture content, stack gas flow rate, CO_2 or O_2 concentration, and fuel flow rate, as applicable, in accordance with §§ 75.71 and 75.72 of this chapter);

(2) Successfully complete all certification tests required under § 97.531 and meet all other requirements of this subpart and part 75 of this chapter applicable to the monitoring systems under paragraph (a)(1) of this section; and

(3) Record, report, and quality-assure the data from the monitoring systems under paragraph (a)(1) of this section.

(b) *Compliance deadlines.* Except as provided in paragraph (e) of this section, the owner or operator shall meet the monitoring system certification and other requirements of paragraphs (a)(1) and (2) of this section on or before the following dates and shall record, report, and quality-assure the data from the monitoring systems under paragraph (a)(1) of this section on and after the following dates.

(1) For the owner or operator of a TR NO_X Ozone Season unit that commences commercial operation before July 1, 2011, May 1, 2012.

(2) For the owner or operator of a TR NO_X Ozone Season unit that commences commercial operation on or after July 1, 2011 and that reports on an annual basis under § 97.534(d), by the later of the following:

(i) 180 calendar days after the date on which the unit commences commercial operation; or

(ii) May 1, 2012.

(3) For the owner or operator of a TR NO_X Ozone Season unit that commences commercial operation on or after July 1, 2011 and that reports on a control period basis under § 97.534(d)(2)(ii), by the following date:

(i) 180 calendar days after the date on which the unit commences commercial operation; or

(ii) If the compliance date under paragraph (b)(3)(i) of this section is not during a control period, May 1 immediately after the compliance date under paragraph (b)(3)(i) of this section.

(4) The owner or operator of a TR NO_X Ozone Season unit for which construction of a new stack or flue or installation of add-on NO_X emission controls is completed after the applicable deadline under paragraph (b)(1), (2), or (3) of this section shall meet the requirements of §§ 75.4(e)(1) through (e)(4) of this chapter, except that:

(i) Such requirements shall apply to the monitoring systems required under § 97.530 through § 97.535, rather than the monitoring systems required under part 75 of this chapter;

(ii) NO_X emission rate, NO_X concentration, stack gas moisture content, stack gas volumetric flow rate, and O_2 or CO_2 concentration data shall be determined and reported, rather than the data listed in § 75.4(e)(2) of this chapter; and

(iii) Any petition for another procedure under § 75.4(e)(2) of this chapter shall be submitted under § 97.535, rather than § 75.66.

(c) *Reporting data.* The owner or operator of a TR NO_X Ozone Season unit that does not meet the applicable compliance date set forth in paragraph (b) of this section for any monitoring system under paragraph (a)(1) of this section shall, for each such monitoring system, determine, record, and report maximum potential (or, as appropriate, minimum potential) values for NO_X concentration, NO_X emission rate, stack gas flow rate, stack gas moisture content, fuel flow rate, and any other parameters required to determine NO_X mass emissions and heat input in accordance with § 75.31(b)(2) or (c)(3) of this chapter, section 2.4 of appendix D to part 75 of this chapter, or section 2.5 of appendix E to part 75 of this chapter, as applicable.

(d) *Prohibitions.* (1) No owner or operator of a TR NO_X Ozone Season unit shall use any alternative monitoring system, alternative reference method, or any other alternative to any requirement of this subpart without having obtained prior written approval in accordance with § 97.535.

(2) No owner or operator of a TR NO_X Ozone Season unit shall operate the unit so as to discharge, or allow to be discharged, NO_X to the atmosphere without accounting for all such NO_X in accordance with the applicable provisions of this subpart and part 75 of this chapter.

(3) No owner or operator of a TR NO_X Ozone Season unit shall disrupt the continuous emission monitoring system, any portion thereof, or any other approved emission monitoring method, and thereby avoid monitoring and recording NO_X mass discharged into the atmosphere or heat input, except for periods of recertification or periods when calibration, quality assurance testing, or maintenance is performed in accordance with the applicable provisions of this subpart and part 75 of this chapter.

(4) No owner or operator of a TR NO_X Ozone Season unit shall retire or permanently discontinue use of the continuous emission monitoring system, any component thereof, or any other approved monitoring system under this subpart, except under any one of the following circumstances:

(i) During the period that the unit is covered by an exemption under § 97.505 that is in effect;

(ii) The owner or operator is monitoring emissions from the unit with another certified monitoring system approved, in accordance with the applicable provisions of this subpart and part 75 of this chapter, by the Administrator for use at that unit that provides emission data for the same pollutant or parameter as the retired or discontinued monitoring system; or

(iii) The designated representative submits notification of the date of certification testing of a replacement monitoring system for the retired or discontinued monitoring system in accordance with § 97.531(d)(3)(i).

(e) *Long-term cold storage.* The owner or operator of a TR NO_X Ozone Season unit is subject to the applicable provisions of § 75.4(d) of this chapter concerning units in long-term cold storage.

§ 97.531 Initial monitoring system certification and recertification procedures.

(a) The owner or operator of a TR NO_X Ozone Season unit shall be exempt from the initial certification requirements of this section for a monitoring system under § 97.530(a)(1) if the following conditions are met:

(1) The monitoring system has been previously certified in accordance with part 75 of this chapter; and

(2) The applicable quality-assurance and quality-control requirements of § 75.21 of this chapter and appendices B, D, and E to part 75 of this chapter are fully met for the certified monitoring system described in paragraph (a)(1) of this section.

(b) The recertification provisions of this section shall apply to a monitoring system under § 97.530(a)(1) that is exempt from initial certification requirements under paragraph (a) of this section.

(c) If the Administrator has previously approved a petition under § 75.17(a) or (b) of this chapter for apportioning the NO_X emission rate measured in a common stack or a petition under § 75.66 of this chapter for an alternative to a requirement in § 75.12 or § 75.17 of this chapter, the designated representative shall resubmit the petition to the Administrator under § 97.535 to determine whether the approval applies under the TR NO_X Ozone Season Trading Program.

(d) Except as provided in paragraph (a) of this section, the owner or operator of a TR NO_X Ozone Season unit shall comply with the following initial certification and recertification procedures for a continuous monitoring system (*i.e.,* a continuous emission monitoring system and an excepted monitoring system under appendices D and E to part 75 of this chapter) under § 97.530(a)(1). The owner or operator of a unit that qualifies to use the low mass emissions excepted monitoring methodology under § 75.19 of this chapter or that qualifies to use an alternative monitoring system under subpart E of part 75 of this chapter shall comply with the procedures in paragraph (e) or (f) of this section respectively.

(1) Requirements for initial certification. The owner or operator shall ensure that each continuous monitoring system under § 97.530(a)(1) (including the automated data acquisition and handling system) successfully completes all of the initial certification testing required under § 75.20 of this chapter by the applicable deadline in § 97.530(b). In addition, whenever the owner or operator installs a monitoring system to meet the requirements of this subpart in a location where no such monitoring system was previously installed, initial certification in accordance with § 75.20 of this chapter is required.

(2) Requirements for recertification. Whenever the owner or operator makes a replacement, modification, or change in any certified continuous emission monitoring system under § 97.530(a)(1) that may significantly affect the ability of the system to accurately measure or record NO_X mass emissions or heat input rate or to meet the quality-assurance and quality-control requirements of § 75.21 of this chapter or appendix B to part 75 of this chapter, the owner or operator shall recertify the monitoring system in accordance with § 75.20(b) of this chapter. Furthermore, whenever the owner or operator makes a replacement, modification, or change to the flue gas handling system or the unit's operation that may significantly change the stack flow or concentration profile, the owner or operator shall recertify each continuous emission monitoring system whose accuracy is potentially affected by the change, in accordance with § 75.20(b) of this chapter. Examples of changes to a continuous emission monitoring system that require recertification include: replacement of the analyzer, complete replacement of an existing continuous emission monitoring system, or change in location or orientation of the sampling probe or site. Any fuel flowmeter system, and any excepted NO_X monitoring system under appendix E to part 75 of this chapter, under § 97.530(a)(1) are subject to the recertification requirements in § 75.20(g)(6) of this chapter.

(3) Approval process for initial certification and recertification. For initial certification of a continuous monitoring system under § 97.530(a)(1), paragraphs (d)(3)(i) through (v) of this section apply. For recertifications of such monitoring systems, paragraphs (d)(3)(i) through (iv) of this section and the procedures in §§ 75.20(b)(5) and (g)(7) of this chapter (in lieu of the procedures in paragraph (d)(3)(v) of this section) apply, provided that in applying paragraphs (d)(3)(i) through (iv) of this section, the words ''certification'' and ''initial certification'' are replaced by the word ''recertification'' and the word ''certified'' is replaced by with the word ''recertified''.

(i) Notification of certification. The designated representative shall submit to the appropriate EPA Regional Office and the Administrator written notice of the dates of certification testing, in accordance with § 97.533.

(ii) Certification application. The designated representative shall submit to the Administrator a certification application for each monitoring system. A complete certification application shall include the information specified in § 75.63 of this chapter.

(iii) Provisional certification date. The provisional certification date for a monitoring system shall be determined in accordance with § 75.20(a)(3) of this chapter. A provisionally certified monitoring system may be used under the TR NO_X Ozone Season Trading Program for a period not to exceed 120 days after receipt by the Administrator of the complete certification application for the monitoring system under paragraph (d)(3)(ii) of this section. Data measured and recorded by the provisionally certified monitoring system, in accordance with the requirements of part 75 of this chapter, will be considered valid quality-assured data (retroactive to the date and time of provisional certification), provided that the Administrator does not invalidate the provisional certification by issuing a notice of disapproval within 120 days of the date of receipt of the complete certification application by the Administrator.

(iv) Certification application approval process. The Administrator will issue a written notice of approval or disapproval of the certification application to the owner or operator within 120 days of receipt of the complete certification application under paragraph (d)(3)(ii) of this section. In the event the Administrator does not issue such a notice within such 120-day period, each monitoring system that meets the applicable performance requirements of part 75 of this chapter and is included in the certification application will be deemed certified for use under the TR NO_X Ozone Season Trading Program.

(A) Approval notice. If the certification application is complete and shows that each monitoring system meets the applicable performance requirements of part 75 of this chapter, then the Administrator will issue a written notice of approval of the certification application within 120 days of receipt.

(B) Incomplete application notice. If the certification application is not complete, then the Administrator will issue a written notice of incompleteness that sets a reasonable date by which the designated representative must submit the additional information required to complete the certification application. If the designated representative does not comply with the notice of incompleteness by the specified date, then the Administrator may issue a notice of disapproval under paragraph (d)(3)(iv)(C) of this section.

(C) Disapproval notice. If the certification application shows that any monitoring system does not meet the performance requirements of part 75 of this chapter or if the certification application is incomplete and the requirement for disapproval under paragraph (d)(3)(iv)(B) of this section is met, then the Administrator will issue a written notice of disapproval of the certification application. Upon issuance of such notice of disapproval, the provisional certification is invalidated by the Administrator and the data measured and recorded by each uncertified monitoring system shall not be considered valid quality-assured data beginning with the date and hour of provisional certification (as defined under § 75.20(a)(3) of this chapter).

(D) Audit decertification. The Administrator may issue a notice of disapproval of the certification status of a monitor in accordance with § 97.532(b).

(v) Procedures for loss of certification. If the Administrator issues a notice of disapproval of a certification application under paragraph (d)(3)(iv)(C) of this section or a notice of disapproval of certification status under paragraph (d)(3)(iv)(D) of this section, then:

(A) The owner or operator shall substitute the following values, for each disapproved monitoring system, for each hour of unit operation during the period of invalid data specified under § 75.20(a)(4)(iii), § 75.20(g)(7), or § 75.21(e) of this chapter and continuing until the applicable date and hour specified under § 75.20(a)(5)(i) or (g)(7) of this chapter:

(1) For a disapproved NO_X emission rate (*i.e.,* NO_X-diluent) system, the maximum potential NO_X emission rate, as defined in § 72.2 of this chapter.

(2) For a disapproved NO_X pollutant concentration monitor and disapproved flow monitor, respectively, the maximum potential concentration of NO_X and the maximum potential flow rate, as defined in sections 2.1.2.1 and

2.1.4.1 of appendix A to part 75 of this chapter.

(3) For a disapproved moisture monitoring system and disapproved diluent gas monitoring system, respectively, the minimum potential moisture percentage and either the maximum potential CO_2 concentration or the minimum potential O_2 concentration (as applicable), as defined in sections 2.1.5, 2.1.3.1, and 2.1.3.2 of appendix A to part 75 of this chapter.

(4) For a disapproved fuel flowmeter system, the maximum potential fuel flow rate, as defined in section 2.4.2.1 of appendix D to part 75 of this chapter.

(5) For a disapproved excepted NO_X monitoring system under appendix E to part 75 of this chapter, the fuel-specific maximum potential NO_X emission rate, as defined in § 72.2 of this chapter.

(B) The designated representative shall submit a notification of certification retest dates and a new certification application in accordance with paragraphs (d)(3)(i) and (ii) of this section.

(C) The owner or operator shall repeat all certification tests or other requirements that were failed by the monitoring system, as indicated in the Administrator's notice of disapproval, no later than 30 unit operating days after the date of issuance of the notice of disapproval.

(e) The owner or operator of a unit qualified to use the low mass emissions (LME) excepted methodology under § 75.19 of this chapter shall meet the applicable certification and recertification requirements in §§ 75.19(a)(2) and 75.20(h) of this chapter. If the owner or operator of such a unit elects to certify a fuel flowmeter system for heat input determination, the owner or operator shall also meet the certification and recertification requirements in § 75.20(g) of this chapter.

(f) The designated representative of each unit for which the owner or operator intends to use an alternative monitoring system approved by the Administrator under subpart E of part 75 of this chapter shall comply with the applicable notification and application procedures of § 75.20(f) of this chapter.

§ 97.532 Monitoring system out-of-control periods.

(a) *General provisions.* Whenever any monitoring system fails to meet the quality-assurance and quality-control requirements or data validation requirements of part 75 of this chapter, data shall be substituted using the applicable missing data procedures in subpart D or subpart H of, or appendix D or appendix E to, part 75 of this chapter.

(b) *Audit decertification.* Whenever both an audit of a monitoring system and a review of the initial certification or recertification application reveal that any monitoring system should not have been certified or recertified because it did not meet a particular performance specification or other requirement under § 97.531 or the applicable provisions of part 75 of this chapter, both at the time of the initial certification or recertification application submission and at the time of the audit, the Administrator will issue a notice of disapproval of the certification status of such monitoring system. For the purposes of this paragraph, an audit shall be either a field audit or an audit of any information submitted to the Administrator or any State or permitting authority. By issuing the notice of disapproval, the Administrator revokes prospectively the certification status of the monitoring system. The data measured and recorded by the monitoring system shall not be considered valid quality-assured data from the date of issuance of the notification of the revoked certification status until the date and time that the owner or operator completes subsequently approved initial certification or recertification tests for the monitoring system. The owner or operator shall follow the applicable initial certification or recertification procedures in § 97.531 for each disapproved monitoring system.

§ 97.533 Notifications concerning monitoring.

The designated representative of a TR NO_X Ozone Season unit shall submit written notice to the Administrator in accordance with § 75.61 of this chapter.

§ 97.534 Recordkeeping and reporting.

(a) *General provisions.* The designated representative shall comply with all recordkeeping and reporting requirements in paragraphs (b) through (e) of this section, the applicable recordkeeping and reporting requirements under § 75.73 of this chapter, and the requirements of § 97.514(a).

(b) *Monitoring plans.* The owner or operator of a TR NO_X Ozone Season unit shall comply with requirements of § 75.73(c) and (e) of this chapter.

(c) *Certification applications.* The designated representative shall submit an application to the Administrator within 45 days after completing all initial certification or recertification tests required under § 97.531, including the information required under § 75.63 of this chapter.

(d) *Quarterly reports.* The designated representative shall submit quarterly reports, as follows:

(1) If the TR NO_X Ozone Season unit is subject to the Acid Rain Program or a TR NO_X Annual emissions limitation or if the owner or operator of such unit chooses to report on an annual basis under this subpart, the designated representative shall meet the requirements of subpart H of part 75 of this chapter (concerning monitoring of NO_X mass emissions) for such unit for the entire year and shall report the NO_X mass emissions data and heat input data for such unit, in an electronic quarterly report in a format prescribed by the Administrator, for each calendar quarter beginning with:

(i) For a unit that commences commercial operation before July 1, 2011, the calendar quarter covering May 1, 2012 through June 30, 2012; or

(ii) For a unit that commences commercial operation on or after July 1, 2011, the calendar quarter corresponding to the earlier of the date of provisional certification or the applicable deadline for initial certification under § 97.530(b), unless that quarter is the third or fourth quarter of 2011 or the first quarter of 2012, in which case reporting shall commence in the quarter covering May 1, 2012 through June 30, 2012.

(2) If the TR NO_X Ozone Season unit is not subject to the Acid Rain Program or a TR NO_X Annual emissions limitation, then the designated representative shall either:

(i) Meet the requirements of subpart H of part 75 (concerning monitoring of NO_X mass emissions) for such unit for the entire year and report the NO_X mass emissions data and heat input data for such unit in accordance with paragraph (d)(1) of this section; or

(ii) Meet the requirements of subpart H of part 75 for the control period (including the requirements in § 75.74(c) of this chapter) and report NO_X mass emissions data and heat input data (including the data described in § 75.74(c)(6) of this chapter) for such unit only for the control period of each year and report, in an electronic quarterly report in a format prescribed by the Administrator, for each calendar quarter beginning with:

(A) For a unit that commences commercial operation before July 1, 2011, the calendar quarter covering May 1, 2012 through June 30, 2012; or

(B) For a unit that commences commercial operation on or after July 1, 2011, the calendar quarter corresponding to the earlier of the date

of provisional certification or the applicable deadline for initial certification under § 97.530(b), unless that date is not during a control period, in which case reporting shall commence in the quarter that includes May 1 through June 30 of the first control period after such date.

(3) The designated representative shall submit each quarterly report to the Administrator within 30 days after the end of the calendar quarter covered by the report. Quarterly reports shall be submitted in the manner specified in § 75.73(f) of this chapter.

(4) For TR NO_X Ozone Season units that are also subject to the Acid Rain Program, TR NO_X Annual Trading Program, TR SO_2 Group 1 Trading Program, or TR SO_2 Group 2 Trading Program, quarterly reports shall include the applicable data and information required by subparts F through H of part 75 of this chapter as applicable, in addition to the NO_X mass emission data, heat input data, and other information required by this subpart.

(5) The Administrator may review and conduct independent audits of any quarterly report in order to determine whether the quarterly report meets the requirements of this subpart and part 75 of this chapter, including the requirement to use substitute data.

(i) The Administrator will notify the designated representative of any determination that the quarterly report fails to meet any such requirements and specify in such notification any corrections that the Administrator believes are necessary to make through resubmission of the quarterly report and a reasonable time period within which the designated representative must respond. Upon request by the designated representative, the Administrator may specify reasonable extensions of such time period. Within the time period (including any such extensions) specified by the Administrator, the designated representative shall resubmit the quarterly report with the corrections specified by the Administrator, except to the extent the designated representative provides information demonstrating that a specified correction is not necessary because the quarterly report already meets the requirements of this subpart and part 75 of this chapter that are relevant to the specified correction.

(6) Any resubmission of a quarterly report shall meet the requirements applicable to the submission of a quarterly report under this subpart and part 75 of this chapter, except for the deadline set forth in paragraph (d)(3) of this section.

(e) *Compliance certification*. The designated representative shall submit to the Administrator a compliance certification (in a format prescribed by the Administrator) in support of each quarterly report based on reasonable inquiry of those persons with primary responsibility for ensuring that all of the unit's emissions are correctly and fully monitored. The certification shall state that:

(1) The monitoring data submitted were recorded in accordance with the applicable requirements of this subpart and part 75 of this chapter, including the quality assurance procedures and specifications;

(2) For a unit with add-on NO_X emission controls and for all hours where NO_X data are substituted in accordance with § 75.34(a)(1) of this chapter, the add-on emission controls were operating within the range of parameters listed in the quality assurance/quality control program under appendix B to part 75 of this chapter and the substitute data values do not systematically underestimate NO_X emissions; and

(3) For a unit that is reporting on a control period basis under paragraph (d)(2)(ii) of this section, the NO_X emission rate and NO_X concentration values substituted for missing data under subpart D of part 75 of this chapter are calculated using only values from a control period and do not systematically underestimate NO_X emissions.

§ 97.535 Petitions for alternatives to monitoring, recordkeeping, or reporting requirements.

(a) The designated representative of a TR NO_X Ozone Season unit may submit a petition under § 75.66 of this chapter to the Administrator, requesting approval to apply an alternative to any requirement of §§ 97.530 through 97.534.

(b) A petition submitted under paragraph (a) of this section shall include sufficient information for the evaluation of the petition, including, at a minimum, the following information:

(i) Identification of each unit and source covered by the petition;

(ii) A detailed explanation of why the proposed alternative is being suggested in lieu of the requirement;

(iii) A description and diagram of any equipment and procedures used in the proposed alternative;

(iv) A demonstration that the proposed alternative is consistent with the purposes of the requirement for which the alternative is proposed and with the purposes of this subpart and part 75 of this chapter and that any adverse effect of approving the alternative will be *de minimis*: and

(v) Any other relevant information that the Administrator may require.

(c) Use of an alternative to any requirement referenced in paragraph (a) of this section is in accordance with this subpart only to the extent that the petition is approved in writing by the Administrator and that such use is in accordance with such approval.

76. Part 97 is amended by adding subpart CCCCC to read as follows:

Subpart CCCCC—TR SO_2 Group 1 Trading Program

Sec.

97.601 Purpose.
97.602 Definitions.
97.603 Measurements, abbreviations, and acronyms.
97.604 Applicability.
97.605 Retired unit exemption.
97.606 Standard requirements.
97.607 Computation of time.
97.608 Administrative appeal procedures.
97.609 [Reserved]
97.610 State SO_2 Group 1 trading budgets, new unit set-asides, Indian country new unit set-asides and variability limits.
97.611 Timing requirements for TR SO_2 Group 1 allowance allocations.
97.612 TR SO_2 Group 1 allowance allocations to new units.
97.613 Authorization of designated representative and alternate designated representative.
97.614 Responsibilities of designated representative and alternate designated representative.
97.615 Changing designated representative and alternate designated representative; changes in owners and operators.
97.616 Certificate of representation.
97.617 Objections concerning designated representative and alternate designated representative.
97.618 Delegation by designated representative and alternate designated representative.
97.619 [Reserved]
97.620 Establishment of compliance accounts and general accounts.
97.621 Recordation of TR SO_2 Group 1 allowance allocations.
97.622 Submission of TR SO_2 Group 1 allowance transfers.
97.623 Recordation of TR SO_2 Group 1 allowance transfers.
97.624 Compliance with TR SO_2 Group 1 emissions limitation.
97.625 Compliance with TR SO_2 Group 1 assurance provisions.
97.626 Banking.
97.627 Account error.
97.628 Administrator's action on submissions.
97.629 [Reserved]
97.630 General monitoring, recordkeeping, and reporting requirements.
97.631 Initial monitoring system certification and recertification procedures.
97.632 Monitoring system out-of-control periods.

97.633 Notifications concerning monitoring.
97.634 Recordkeeping and reporting.
97.635 Petitions for alternatives to monitoring, recordkeeping, or reporting requirements.

Subpart CCCCC—TR SO_2 Group 1 Trading Program

§ 97.601 Purpose.

This subpart sets forth the general, designated representative, allowance, and monitoring provisions for the Transport Rule (TR) SO_2 Group 1 Trading Program, under section 110 of the Clean Air Act and § 52.39 of this chapter, as a means of mitigating interstate transport of fine particulates and sulfur dioxide.

§ 97.602 Definitions.

The terms used in this subpart shall have the meanings set forth in this section as follows:

Acid Rain Program means a multi-state SO_2 and NO_X air pollution control and emission reduction program established by the Administrator under title IV of the Clean Air Act and parts 72 through 78 of this chapter.

Administrator means the Administrator of the United States Environmental Protection Agency or the Director of the Clean Air Markets Division (or its successor determined by the Administrator) of the United States Environmental Protection Agency, the Administrator's duly authorized representative under this subpart.

Allocate or *allocation* means, with regard to TR SO_2 Group 1 allowances, the determination by the Administrator, State, or permitting authority, in accordance with this subpart and any SIP revision submitted by the State and approved by the Administrator under § 52.39(d), (e), or (f) of this chapter, of the amount of such TR SO_2 Group 1 allowances to be initially credited, at no cost to the recipient, to:

(1) A TR SO_2 Group 1 unit;

(2) A new unit set-aside;

(3) An Indian country new unit set-aside; or

(4) An entity not listed in paragraphs (1) through (3) of this definition;

(5) Provided that, if the Administrator, State, or permitting authority initially credits, to a TR SO_2 Group 1 unit qualifying for an initial credit, a credit in the amount of zero TR SO_2 Group 1 allowances, the TR SO_2 Group 1 unit will be treated as being allocated an amount (*i.e.,* zero) of TR SO_2 Group 1 allowances.

Allowable SO_2 emission rate means, for a unit, the most stringent State or federal SO_2 emission rate limit (in lb/MWhr or, if in lb/mmBtu, converted to lb/MWhr by multiplying it by the unit's heat rate in mmBtu/MWhr) that is applicable to the unit and covers the longest averaging period not exceeding one year.

Allowance Management System means the system by which the Administrator records allocations, deductions, and transfers of TR SO_2 Group 1 allowances under the TR SO_2 Group 1 Trading Program. Such allowances are allocated, recorded, held, deducted, or transferred only as whole allowances.

Allowance Management System account means an account in the Allowance Management System established by the Administrator for purposes of recording the allocation, holding, transfer, or deduction of TR SO_2 Group 1 allowances.

Allowance transfer deadline means, for a control period in a given year, midnight of March 1 (if it is a business day), or midnight of the first business day thereafter (if March 1 is not a business day), immediately after such control period and is the deadline by which a TR SO_2 Group 1 allowance transfer must be submitted for recordation in a TR SO_2 Group 1 source's compliance account in order to be available for use in complying with the source's TR SO_2 Group 1 emissions limitation for such control period in accordance with §§ 97.606 and 97.624.

Alternate designated representative means, for a TR SO_2 Group 1 source and each TR SO_2 Group 1 unit at the source, the natural person who is authorized by the owners and operators of the source and all such units at the source, in accordance with this subpart, to act on behalf of the designated representative in matters pertaining to the TR SO_2 Group 1 Trading Program. If the TR SO_2 Group 1 source is also subject to the Acid Rain Program, TR NO_X Annual Trading Program, or TR NO_X Ozone Season Trading Program, then this natural person shall be the same natural person as the alternate designated representative, as defined in the respective program.

Assurance account means an Allowance Management System account, established by the Administrator under § 97.625(b)(3) for certain owners and operators of a group of one or more TR SO_2 Group 1 sources and units in a given State (and Indian country within the borders of such State), in which are held TR SO_2 Group 1 allowances available for use for a control period in a given year in complying with the TR SO_2 Group 1 assurance provisions in accordance with §§ 97.606 and 97.625.

Authorized account representative means, for a general account, the natural person who is authorized, in accordance with this subpart, to transfer and otherwise dispose of TR SO_2 Group 1 allowances held in the general account and, for a TR SO_2 Group 1 source's compliance account, the designated representative of the source.

Automated data acquisition and handling system or *DAHS* means the component of the continuous emission monitoring system, or other emissions monitoring system approved for use under this subpart, designed to interpret and convert individual output signals from pollutant concentration monitors, flow monitors, diluent gas monitors, and other component parts of the monitoring system to produce a continuous record of the measured parameters in the measurement units required by this subpart.

Biomass means—

(1) Any organic material grown for the purpose of being converted to energy;

(2) Any organic byproduct of agriculture that can be converted into energy; or

(3) Any material that can be converted into energy and is nonmerchantable for other purposes, that is segregated from other material that is nonmerchantable for other purposes, and that is;

(i) A forest-related organic resource, including mill residues, precommercial thinnings, slash, brush, or byproduct from conversion of trees to merchantable material; or

(ii) A wood material, including pallets, crates, dunnage, manufacturing and construction materials (other than pressure-treated, chemically-treated, or painted wood products), and landscape or right-of-way tree trimmings.

Boiler means an enclosed fossil- or other-fuel-fired combustion device used to produce heat and to transfer heat to recirculating water, steam, or other medium.

Bottoming-cycle unit means a unit in which the energy input to the unit is first used to produce useful thermal energy, where at least some of the reject heat from the useful thermal energy application or process is then used for electricity production.

Business day means a day that does not fall on a weekend or a federal holiday.

Certifying official means a natural person who is:

(1) For a corporation, a president, secretary, treasurer, or vice-president of the corporation in charge of a principal business function or any other person who performs similar policy- or decision-making functions for the corporation;

(2) For a partnership or sole proprietorship, a general partner or the proprietor respectively; or

(3) For a local government entity or State, federal, or other public agency, a principal executive officer or ranking elected official.

Clean Air Act means the Clean Air Act, 42 U.S.C. 7401, *et seq.*

Coal means ''coal'' as defined in § 72.2 of this chapter.

Coal-derived fuel means any fuel (whether in a solid, liquid, or gaseous state) produced by the mechanical, thermal, or chemical processing of coal.

Cogeneration system means an integrated group, at a source, of equipment (including a boiler, or combustion turbine, and a steam turbine generator) designed to produce useful thermal energy for industrial, commercial, heating, or cooling purposes and electricity through the sequential use of energy.

Cogeneration unit means a stationary, fossil-fuel-fired boiler or stationary, fossil-fuel-fired combustion turbine that is a topping-cycle unit or a bottoming-cycle unit:

(1) Operating as part of a cogeneration system; and

(2) Producing on an annual average basis—

(i) For a topping-cycle unit,

(A) Useful thermal energy not less than 5 percent of total energy output; and

(B) Useful power that, when added to one-half of useful thermal energy produced, is not less than 42.5 percent of total energy input, if useful thermal energy produced is 15 percent or more of total energy output, or not less than 45 percent of total energy input, if useful thermal energy produced is less than 15 percent of total energy output.

(ii) For a bottoming-cycle unit, useful power not less than 45 percent of total energy input;

(3) Provided that the requirements in paragraph (2) of this definition shall not apply to a calendar year referenced in paragraph (2) of this definition during which the unit did not operate at all;

(4) Provided that the total energy input under paragraphs (2)(i)(B) and (2)(ii) of this definition shall equal the unit's total energy input from all fuel, except biomass if the unit is a boiler; and

(5) Provided that, if, throughout its operation during the 12-month period or a calendar year referenced in paragraph (2) of this definition, a unit is operated as part of a cogeneration system and the cogeneration system meets on a system-wide basis the requirement in paragraph (2)(i)(B) or (2)(ii) of this definition, the unit shall be deemed to meet such requirement during that 12-month period or calendar year.

Combustion turbine means an enclosed device comprising:

(1) If the device is simple cycle, a compressor, a combustor, and a turbine and in which the flue gas resulting from the combustion of fuel in the combustor passes through the turbine, rotating the turbine; and

(2) If the device is combined cycle, the equipment described in paragraph (1) of this definition and any associated duct burner, heat recovery steam generator, and steam turbine.

Commence commercial operation means, with regard to a unit:

(1) To have begun to produce steam, gas, or other heated medium used to generate electricity for sale or use, including test generation, except as provided in § 97.605.

(i) For a unit that is a TR SO_2 Group 1 unit under § 97.604 on the later of January 1, 2005 or the date the unit commences commercial operation as defined in the introductory text of paragraph (1) of this definition and that subsequently undergoes a physical change or is moved to a new location or source, such date shall remain the date of commencement of commercial operation of the unit, which shall continue to be treated as the same unit.

(ii) For a unit that is a TR SO_2 Group 1 unit under § 97.604 on the later of January 1, 2005 or the date the unit commences commercial operation as defined in the introductory text of paragraph (1) of this definition and that is subsequently replaced by a unit at the same or a different source, such date shall remain the replaced unit's date of commencement of commercial operation, and the replacement unit shall be treated as a separate unit with a separate date for commencement of commercial operation as defined in paragraph (1) or (2) of this definition as appropriate.

(2) Notwithstanding paragraph (1) of this definition and except as provided in § 97.605, for a unit that is not a TR SO_2 Group 1 unit under § 97.604 on the later of January 1, 2005 or the date the unit commences commercial operation as defined in introductory text of paragraph (1) of this definition, the unit's date for commencement of commercial operation shall be the date on which the unit becomes a TR SO_2 Group 1 unit under § 97.604.

(i) For a unit with a date for commencement of commercial operation as defined in the introductory text of paragraph (2) of this definition and that subsequently undergoes a physical change or is moved to a different location or source, such date shall remain the date of commencement of commercial operation of the unit, which shall continue to be treated as the same unit.

(ii) For a unit with a date for commencement of commercial operation as defined in the introductory text of paragraph (2) of this definition and that is subsequently replaced by a unit at the same or a different source, such date shall remain the replaced unit's date of commencement of commercial operation, and the replacement unit shall be treated as a separate unit with a separate date for commencement of commercial operation as defined in paragraph (1) or (2) of this definition as appropriate.

Common designated representative means, with regard to a control period in a given year, a designated representative where, as of April 1 immediately after the allowance transfer deadline for such control period, the same natural person is authorized under §§ 97.613(a) and 97.615(a) as the designated representative for a group of one or more TR SO_2 Group 1 sources and units located in a State (and Indian country within the borders of such State).

Common designated representative's assurance level means, with regard to a specific common designated representative and a State (and Indian country within the borders of such State) and control period in a given year for which the State assurance level is exceeded as described in § 97.606(c)(2)(iii), the common designated representative's share of the State SO_2 Group 1 trading budget with the variability limit for the State for such control period.

Common designated representative's share means, with regard to a specific common designated representative for a control period in a given year:

(1) With regard to a total amount of SO_2 emissions from all TR SO_2 Group 1 units in a State (and Indian country within the borders of such State) during such control period, the total tonnage of SO_2 emissions during such control period from a group of one or more TR SO_2 Group 1 units located in such State (and such Indian country) and having the common designated representative for such control period;

(2) With regard to a State SO_2 Group 1 trading budget with the variability limit for such control period, the amount (rounded to the nearest allowance) equal to the sum of the total amount of TR SO_2 Group 1 allowances allocated for such control period to a group of one or more TR SO_2 Group 1 units located in the State (and Indian country within the borders of such

State) and having the common designated representative for such control period and of the total amount of TR SO_2 Group 1 allowances purchased by an owner or operator of such TR SO_2 Group 1 units in an auction for such control period and submitted by the State or the permitting authority to the Administrator for recordation in the compliance accounts for such TR SO_2 Group 1 units in accordance with the TR SO_2 Group 1 allowance auction provisions in a SIP revision approved by the Administrator under § 52.39(e) or (f) of this chapter, multiplied by the sum of the State SO_2 Group 1 trading budget under § 97.610(a) and the State's variability limit under § 97.610(b) for such control period and divided by such State SO_2 Group 1 trading budget;

(3) Provided that, in the case of a unit that operates during, but has no amount of TR SO_2 Group 1 allowances allocated under §§ 97.611 and 97.612 for, such control period, the unit shall be treated, solely for purposes of this definition, as being allocated an amount (rounded to the nearest allowance) of TR SO_2 Group 1 allowances for such control period equal to the unit's allowable SO_2 emission rate applicable to such control period, multiplied by a capacity factor of 0.85 (if the unit is a boiler combusting any amount of coal or coal-derived fuel during such control period), 0.24 (if the unit is a simple combustion turbine during such control period), 0.67 (if the unit is a combined cycle turbine during such control period), 0.74 (if the unit is an integrated coal gasification combined cycle unit during such control period), or 0.36 (for any other unit), multiplied by the unit's maximum hourly load as reported in accordance with this subpart and by 8,760 hours/control period, and divided by 2,000 lb/ton.

Common stack means a single flue through which emissions from 2 or more units are exhausted.

Compliance account means an Allowance Management System account, established by the Administrator for a TR SO_2 Group 1 source under this subpart, in which any TR SO_2 Group 1 allowance allocations to the TR SO_2 Group 1 units at the source are recorded and in which are held any TR SO_2 Group 1 allowances available for use for a control period in a given year in complying with the source's TR SO_2 Group 1 emissions limitation in accordance with §§ 97.606 and 97.624.

Continuous emission monitoring system or *CEMS* means the equipment required under this subpart to sample, analyze, measure, and provide, by means of readings recorded at least once every 15 minutes and using an automated data acquisition and handling system (DAHS), a permanent record of SO_2 emissions, stack gas volumetric flow rate, stack gas moisture content, and O_2 or CO_2 concentration (as applicable), in a manner consistent with part 75 of this chapter and §§ 97.630 through 97.635. The following systems are the principal types of continuous emission monitoring systems:

(1) A flow monitoring system, consisting of a stack flow rate monitor and an automated data acquisition and handling system and providing a permanent, continuous record of stack gas volumetric flow rate, in standard cubic feet per hour (scfh);

(2) A SO_2 monitoring system, consisting of a SO_2 pollutant concentration monitor and an automated data acquisition and handling system and providing a permanent, continuous record of SO_2 emissions, in parts per million (ppm);

(3) A moisture monitoring system, as defined in § 75.11(b)(2) of this chapter and providing a permanent, continuous record of the stack gas moisture content, in percent H_2O;

(4) A CO_2 monitoring system, consisting of a CO_2 pollutant concentration monitor (or an O_2 monitor plus suitable mathematical equations from which the CO_2 concentration is derived) and an automated data acquisition and handling system and providing a permanent, continuous record of CO_2 emissions, in percent CO_2; and

(5) An O_2 monitoring system, consisting of an O_2 concentration monitor and an automated data acquisition and handling system and providing a permanent, continuous record of O_2, in percent O_2.

Control period means the period starting January 1 of a calendar year, except as provided in § 97.606(c)(3), and ending on December 31 of the same year, inclusive.

Designated representative means, for a TR SO_2 Group 1 source and each TR SO_2 Group 1 unit at the source, the natural person who is authorized by the owners and operators of the source and all such units at the source, in accordance with this subpart, to represent and legally bind each owner and operator in matters pertaining to the TR SO_2 Group 1 Trading Program. If the TR SO_2 Group 1 source is also subject to the Acid Rain Program, TR NO_X Annual Trading Program, or TR NO_X Ozone Season Trading Program, then this natural person shall be the same natural person as the designated representative, as defined in the respective program.

Emissions means air pollutants exhausted from a unit or source into the atmosphere, as measured, recorded, and reported to the Administrator by the designated representative, and as modified by the Administrator:

(1) In accordance with this subpart; and

(2) With regard to a period before the unit or source is required to measure, record, and report such air pollutants in accordance with this subpart, in accordance with part 75 of this chapter.

Excess emissions means any ton of emissions from the TR SO_2 Group 1 units at a TR SO_2 Group 1 source during a control period in a given year that exceeds the TR SO_2 Group 1 emissions limitation for the source for such control period.

Fossil fuel means—

(1) Natural gas, petroleum, coal, or any form of solid, liquid, or gaseous fuel derived from such material; or

(2) For purposes of applying the limitation on ''average annual fuel consumption of fossil fuel'' in §§ 97.604(b)(2)(i)(B) and (ii), natural gas, petroleum, coal, or any form of solid, liquid, or gaseous fuel derived from such material for the purpose of creating useful heat.

Fossil-fuel-fired means, with regard to a unit, combusting any amount of fossil fuel in 2005 or any calendar year thereafter.

General account means an Allowance Management System account, established under this subpart, that is not a compliance account or an assurance account.

Generator means a device that produces electricity.

Gross electrical output means, for a unit, electricity made available for use, including any such electricity used in the power production process (which process includes, but is not limited to, any on-site processing or treatment of fuel combusted at the unit and any on-site emission controls).

Heat input means, for a unit for a specified period of time, the product (in mmBtu/time) of the gross calorific value of the fuel (in mmBtu/lb) fed into the unit multiplied by the fuel feed rate (in lb of fuel/time), as measured, recorded, and reported to the Administrator by the designated representative and as modified by the Administrator in accordance with this subpart and excluding the heat derived from preheated combustion air, recirculated flue gases, or exhaust.

Heat input rate means, for a unit, the amount of heat input (in mmBtu) divided by unit operating time (in hr) or, for a unit and a specific fuel, the amount of heat input attributed to the

fuel (in mmBtu) divided by the unit operating time (in hr) during which the unit combusts the fuel.

Heat rate means, for a unit, the unit's maximum design heat input (in Btu/hr), divided by the product of 1,000,000 Btu/mmBtu and the unit's maximum hourly load.

Indian country means ''Indian country'' as defined in 18 U.S.C. 1151.

Life-of-the-unit, firm power contractual arrangement means a unit participation power sales agreement under which a utility or industrial customer reserves, or is entitled to receive, a specified amount or percentage of nameplate capacity and associated energy generated by any specified unit and pays its proportional amount of such unit's total costs, pursuant to a contract:

(1) For the life of the unit;

(2) For a cumulative term of no less than 30 years, including contracts that permit an election for early termination; or

(3) For a period no less than 25 years or 70 percent of the economic useful life of the unit determined as of the time the unit is built, with option rights to purchase or release some portion of the nameplate capacity and associated energy generated by the unit at the end of the period.

Maximum design heat input means, for a unit, the maximum amount of fuel per hour (in Btu/hr) that the unit is capable of combusting on a steady state basis as of the initial installation of the unit as specified by the manufacturer of the unit.

Monitoring system means any monitoring system that meets the requirements of this subpart, including a continuous emission monitoring system, an alternative monitoring system, or an excepted monitoring system under part 75 of this chapter.

Nameplate capacity means, starting from the initial installation of a generator, the maximum electrical generating output (in MWe, rounded to the nearest tenth) that the generator is capable of producing on a steady state basis and during continuous operation (when not restricted by seasonal or other deratings) as of such installation as specified by the manufacturer of the generator or, starting from the completion of any subsequent physical change in the generator resulting in an increase in the maximum electrical generating output that the generator is capable of producing on a steady state basis and during continuous operation (when not restricted by seasonal or other deratings), such increased maximum amount (in MWe, rounded to the nearest tenth) as of such completion as specified by the person conducting the physical change.

Natural gas means ''natural gas'' as defined in § 72.2 of this chapter.

Newly affected TR SO_2 Group 1 unit means a unit that was not a TR SO_2 Group 1 unit when it began operating but that thereafter becomes a TR SO_2 Group 1 unit.

Operate or *operation* means, with regard to a unit, to combust fuel.

Operator means, for a TR SO_2 Group 1 source or a TR SO_2 Group 1 unit at a source respectively, any person who operates, controls, or supervises a TR SO_2 Group 1 unit at the source or the TR SO_2 Group 1 unit and shall include, but not be limited to, any holding company, utility system, or plant manager of such source or unit.

Owner means, for a TR SO_2 Group 1 source or a TR SO_2 Group 1 unit at a source respectively, any of the following persons:

(1) Any holder of any portion of the legal or equitable title in a TR SO_2 Group 1 unit at the source or the TR SO_2 Group 1 unit;

(2) Any holder of a leasehold interest in a TR SO_2 Group 1 unit at the source or the TR SO_2 Group 1 unit, provided that, unless expressly provided for in a leasehold agreement, ''owner'' shall not include a passive lessor, or a person who has an equitable interest through such lessor, whose rental payments are not based (either directly or indirectly) on the revenues or income from such TR SO_2 Group 1 unit; and

(3) Any purchaser of power from a TR SO_2 Group 1 unit at the source or the TR SO_2 Group 1 unit under a life-of-the-unit, firm power contractual arrangement.

Permanently retired means, with regard to a unit, a unit that is unavailable for service and that the unit's owners and operators do not expect to return to service in the future.

Permitting authority means ''permitting authority'' as defined in §§ 70.2 and 71.2 of this chapter.

Potential electrical output capacity means, for a unit, 33 percent of the unit's maximum design heat input, divided by 3,413 Btu/kWh, divided by 1,000 kWh/MWh, and multiplied by 8,760 hr/yr.

Receive or *receipt of* means, when referring to the Administrator, to come into possession of a document, information, or correspondence (whether sent in hard copy or by authorized electronic transmission), as indicated in an official log, or by a notation made on the document, information, or correspondence, by the Administrator in the regular course of business.

Recordation, record, or *recorded* means, with regard to TR SO_2 Group 1 allowances, the moving of TR SO_2 Group 1 allowances by the Administrator into, out of, or between Allowance Management System accounts, for purposes of allocation, auction, transfer, or deduction.

Reference method means any direct test method of sampling and analyzing for an air pollutant as specified in § 75.22 of this chapter.

Replacement, replace, or *replaced* means, with regard to a unit, the demolishing of a unit, or the permanent retirement and permanent disabling of a unit, and the construction of another unit (the replacement unit) to be used instead of the demolished or retired unit (the replaced unit).

Sequential use of energy means:

(1) The use of reject heat from electricity production in a useful thermal energy application or process; or

(2) The use of reject heat from useful thermal energy application or process in electricity production.

Serial number means, for a TR SO_2 Group 1 allowance, the unique identification number assigned to each TR SO_2 Group 1 allowance by the Administrator.

Solid waste incineration unit means a stationary, fossil-fuel-fired boiler or stationary, fossil-fuel-fired combustion turbine that is a ''solid waste incineration unit'' as defined in section 129(g)(1) of the Clean Air Act.

Source means all buildings, structures, or installations located in one or more contiguous or adjacent properties under common control of the same person or persons. This definition does not change or otherwise affect the definition of ''major source'', ''stationary source'', or ''source'' as set forth and implemented in a title V operating permit program or any other program under the Clean Air Act.

State means one of the States that is subject to the TR SO_2 Group 1 Trading Program pursuant to § 52.39(a), (b), (d), (e), and (f) of this chapter.

Submit or *serve* means to send or transmit a document, information, or correspondence to the person specified in accordance with the applicable regulation:

(1) In person;

(2) By United States Postal Service; or

(3) By other means of dispatch or transmission and delivery;

(4) Provided that compliance with any ''submission'' or ''service'' deadline shall be determined by the date of dispatch, transmission, or mailing and not the date of receipt.

Topping-cycle unit means a unit in which the energy input to the unit is first used to produce useful power, including electricity, where at least some of the reject heat from the electricity production is then used to provide useful thermal energy.

Total energy input means, for a unit, total energy of all forms supplied to the unit, excluding energy produced by the unit. Each form of energy supplied shall be measured by the lower heating value of that form of energy calculated as follows:

$$LHV = HHV - 10.55(W + 9H)$$

Where:

LHV = lower heating value of the form of energy in Btu/lb,
HHV = higher heating value of the form of energy in Btu/lb,
W = weight % of moisture in the form of energy, and
H = weight % of hydrogen in the form of energy.

Total energy output means, for a unit, the sum of useful power and useful thermal energy produced by the unit.

TR NO_X Annual Trading Program means a multi-state NO_X air pollution control and emission reduction program established in accordance with subpart AAAAA of this part and § 52.38(a) of this chapter (including such a program that is revised in a SIP revision approved by the Administrator under § 52.38(a)(3) or (4) of this chapter or that is established in a SIP revision approved by the Administrator under § 52.38(a)(5) of this chapter), as a means of mitigating interstate transport of fine particulates and NO_X.

TR NO_X Ozone Season Trading Program means a multi-state NO_X air pollution control and emission reduction program established in accordance with subpart BBBBB of this part and § 52.38(b) of this chapter (including such a program that is revised in a SIP revision approved by the Administrator under § 52.38(b)(3) or (4) of this chapter or that is established in a SIP revision approved by the Administrator under § 52.38(b)(5) of this chapter), as a means of mitigating interstate transport of ozone and NO_X.

TR SO_2 Group 1 allowance means a limited authorization issued and allocated or auctioned by the Administrator under this subpart, or by a State or permitting authority under a SIP revision approved by the Administrator under § 52.39(d), (e), or (f) of this chapter, to emit one ton of SO_2 during a control period of the specified calendar year for which the authorization is allocated or auctioned or of any calendar year thereafter under the TR SO_2 Group 1 Trading Program.

TR SO_2 Group 1 allowance deduction or *deduct TR SO_2 Group 1 allowances* means the permanent withdrawal of TR SO_2 Group 1 allowances by the Administrator from a compliance account (*e.g.,* in order to account for compliance with the TR SO_2 Group 1 emissions limitation) or from an assurance account (*e.g.,* in order to account for compliance with the assurance provisions under §§ 97.606 and 97.625).

TR SO_2 Group 1 allowances held or *hold TR SO_2 Group 1 allowances* means the TR SO_2 Group 1 allowances treated as included in an Allowance Management System account as of a specified point in time because at that time they:

(1) Have been recorded by the Administrator in the account or transferred into the account by a correctly submitted, but not yet recorded, TR SO_2 Group 1 allowance transfer in accordance with this subpart; and

(2) Have not been transferred out of the account by a correctly submitted, but not yet recorded, TR SO_2 Group 1 allowance transfer in accordance with this subpart.

TR SO_2 Group 1 emissions limitation means, for a TR SO_2 Group 1 source, the tonnage of SO_2 emissions authorized in a control period by the TR SO_2 Group 1 allowances available for deduction for the source under § 97.624(a) for such control period.

TR SO_2 Group 1 source means a source that includes one or more TR SO_2 Group 1 units.

TR SO_2 Group 1 Trading Program means a multi-state SO_2 air pollution control and emission reduction program established in accordance with this subpart and § 52.39(a), (b), (d) through (f), (j), and (k) of this chapter (including such a program that is revised in a SIP revision approved by the Administrator under § 52.39(d) or (e) of this chapter or that is established in a SIP revision approved by the Administrator under § 52.39(f) of this chapter), as a means of mitigating interstate transport of fine particulates and SO_2.

TR SO_2 Group 1 unit means a unit that is subject to the TR SO_2 Group 1 Trading Program under § 97.604.

Unit means a stationary, fossil-fuel-fired boiler, stationary, fossil-fuel-fired combustion turbine, or other stationary, fossil-fuel-fired combustion device. A unit that undergoes a physical change or is moved to a different location or source shall continue to be treated as the same unit. A unit (the replaced unit) that is replaced by another unit (the replacement unit) at the same or a different source shall continue to be treated as the same unit, and the replacement unit shall be treated as a separate unit.

Unit operating day means, with regard to a unit, a calendar day in which the unit combusts any fuel.

Unit operating hour or hour of unit operation means, with regard to a unit, an hour in which the unit combusts any fuel.

Useful power means, with regard to a unit, electricity or mechanical energy that the unit makes available for use, excluding any such energy used in the power production process (which process includes, but is not limited to, any on-site processing or treatment of fuel combusted at the unit and any on-site emission controls).

Useful thermal energy means thermal energy that is:

(1) Made available to an industrial or commercial process (not a power production process), excluding any heat contained in condensate return or makeup water;

(2) Used in a heating application (*e.g.,* space heating or domestic hot water heating); or

(3) Used in a space cooling application (*i.e.,* in an absorption chiller).

Utility power distribution system means the portion of an electricity grid owned or operated by a utility and dedicated to delivering electricity to customers.

§ 97.603 Measurements, abbreviations, and acronyms.

Measurements, abbreviations, and acronyms used in this subpart are defined as follows:

Btu—British thermal unit
CO_2—carbon dioxide
H_2O—water
hr—hour
kW—kilowatt electrical
kWh—kilowatt hour
lb—pound
mmBtu—million Btu
MWe—megawatt electrical
MWh—megawatt hour
NO_X—nitrogen oxides
O_2—oxygen
ppm—parts per million
scfh—standard cubic feet per hour
SO_2—sulfur dioxide
yr—year

§ 97.604 Applicability.

(a) Except as provided in paragraph (b) of this section:

(1) The following units in a State (and Indian country within the borders of such State) shall be TR SO_2 Group 1 units, and any source that includes one or more such units shall be a TR SO_2 Group 1 source, subject to the requirements of this subpart: any stationary, fossil-fuel-fired boiler or

stationary, fossil-fuel-fired combustion turbine serving at any time, on or after January 1, 2005, a generator with nameplate capacity of more than 25 MWe producing electricity for sale.

(2) If a stationary boiler or stationary combustion turbine that, under paragraph (a)(1) of this section, is not a TR SO_2 Group 1 unit begins to combust fossil fuel or to serve a generator with nameplate capacity of more than 25 MWe producing electricity for sale, the unit shall become a TR SO_2 Group 1 unit as provided in paragraph (a)(1) of this section on the first date on which it both combusts fossil fuel and serves such generator.

(b) Any unit in a State (and Indian country within the borders of such State) that otherwise is a TR SO_2 Group 1 unit under paragraph (a) of this section and that meets the requirements set forth in paragraph (b)(1)(i) or (2)(i) of this section shall not be a TR SO_2 Group 1 unit:

(1)(i) Any unit:

(A) Qualifying as a cogeneration unit throughout the later of 2005 or the 12-month period starting on the date the unit first produces electricity and continuing to qualify as a cogeneration unit throughout each calendar year ending after the later of 2005 or such 12-month period; and

(B) Not supplying in 2005 or any calendar year thereafter more than one-third of the unit's potential electric output capacity or 219,000 MWh, whichever is greater, to any utility power distribution system for sale.

(ii) If, after qualifying under paragraph (b)(1)(i) of this section as not being a TR SO_2 Group 1 unit, a unit subsequently no longer meets all the requirements of paragraph (b)(1)(i) of this section, the unit shall become a TR SO_2 Group 1 unit starting on the earlier of January 1 after the first calendar year during which the unit first no longer qualifies as a cogeneration unit or January 1 after the first calendar year during which the unit no longer meets the requirements of paragraph (b)(1)(i)(B) of this section. The unit shall thereafter continue to be a TR SO_2 Group 1 unit.

(2)(i) Any unit:

(A) Qualifying as a solid waste incineration unit throughout the later of 2005 or the 12-month period starting on the date the unit first produces electricity and continuing to qualify as a solid waste incineration unit throughout each calendar year ending after the later of 2005 or such 12-month period; and

(B) With an average annual fuel consumption of fossil fuel for the first 3 consecutive calendar years of operation starting no earlier than 2005 of less than 20 percent (on a Btu basis) and an average annual fuel consumption of fossil fuel for any 3 consecutive calendar years thereafter of less than 20 percent (on a Btu basis).

(ii) If, after qualifying under paragraph (b)(2)(i) of this section as not being a TR SO_2 Group 1 unit, a unit subsequently no longer meets all the requirements of paragraph (b)(1)(i) of this section, the unit shall become a TR SO_2 Group 1 unit starting on the earlier of January 1 after the first calendar year during which the unit first no longer qualifies as a solid waste incineration unit or January 1 after the first 3 consecutive calendar years after 2005 for which the unit has an average annual fuel consumption of fossil fuel of 20 percent or more. The unit shall thereafter continue to be a TR SO_2 Group 1 unit.

(c) A certifying official of an owner or operator of any unit or other equipment may submit a petition (including any supporting documents) to the Administrator at any time for a determination concerning the applicability, under paragraphs (a) and (b) of this section or a SIP revision approved under § 52.39(e) or (f) of this chapter, of the TR SO_2 Group 1 Trading Program to the unit or other equipment.

(1) Petition content. The petition shall be in writing and include the identification of the unit or other equipment and the relevant facts about the unit or other equipment. The petition and any other documents provided to the Administrator in connection with the petition shall include the following certification statement, signed by the certifying official: ''I am authorized to make this submission on behalf of the owners and operators of the unit or other equipment for which the submission is made. I certify under penalty of law that I have personally examined, and am familiar with, the statements and information submitted in this document and all its attachments. Based on my inquiry of those individuals with primary responsibility for obtaining the information, I certify that the statements and information are to the best of my knowledge and belief true, accurate, and complete. I am aware that there are significant penalties for submitting false statements and information or omitting required statements and information, including the possibility of fine or imprisonment.''

(2) Response. The Administrator will issue a written response to the petition and may request supplemental information determined by the Administrator to be relevant to such petition. The Administrator's determination concerning the applicability, under paragraphs (a) and (b) of this section, of the TR SO_2 Group 1 Trading Program to the unit or other equipment shall be binding on any State or permitting authority unless the Administrator determines that the petition or other documents or information provided in connection with the petition contained significant, relevant errors or omissions.

§ 97.605 Retired unit exemption.

(a)(1) Any TR SO_2 Group 1 unit that is permanently retired shall be exempt from § 97.606(b) and (c)(1), § 97.624, and §§ 97.630 through 97.635.

(2) The exemption under paragraph (a)(1) of this section shall become effective the day on which the TR SO_2 Group 1 unit is permanently retired. Within 30 days of the unit's permanent retirement, the designated representative shall submit a statement to the Administrator. The statement shall state, in a format prescribed by the Administrator, that the unit was permanently retired on a specified date and will comply with the requirements of paragraph (b) of this section.

(b) Special provisions. (1) A unit exempt under paragraph (a) of this section shall not emit any SO_2, starting on the date that the exemption takes effect.

(2) For a period of 5 years from the date the records are created, the owners and operators of a unit exempt under paragraph (a) of this section shall retain, at the source that includes the unit, records demonstrating that the unit is permanently retired. The 5-year period for keeping records may be extended for cause, at any time before the end of the period, in writing by the Administrator. The owners and operators bear the burden of proof that the unit is permanently retired.

(3) The owners and operators and, to the extent applicable, the designated representative of a unit exempt under paragraph (a) of this section shall comply with the requirements of the TR SO_2 Group 1 Trading Program concerning all periods for which the exemption is not in effect, even if such requirements arise, or must be complied with, after the exemption takes effect.

(4) A unit exempt under paragraph (a) of this section shall lose its exemption on the first date on which the unit resumes operation. Such unit shall be treated, for purposes of applying allocation, monitoring, reporting, and recordkeeping requirements under this subpart, as a unit that commences commercial operation on the first date on which the unit resumes operation.

§ 97.606 Standard requirements.

(a) *Designated representative requirements.* The owners and operators shall comply with the requirement to have a designated representative, and may have an alternate designated representative, in accordance with §§ 97.613 through 97.618.

(b) *Emissions monitoring, reporting, and recordkeeping requirements.* (1) The owners and operators, and the designated representative, of each TR SO_2 Group 1 source and each TR SO_2 Group 1 unit at the source shall comply with the monitoring, reporting, and recordkeeping requirements of §§ 97.630 through 97.635.

(2) The emissions data determined in accordance with §§ 97.630 through 97.635 shall be used to calculate allocations of TR SO_2 Group 1 allowances under §§ 97.611(a)(2) and (b) and 97.612 and to determine compliance with the TR SO_2 Group 1 emissions limitation and assurance provisions under paragraph (c) of this section, provided that, for each monitoring location from which mass emissions are reported, the mass emissions amount used in calculating such allocations and determining such compliance shall be the mass emissions amount for the monitoring location determined in accordance with §§ 97.630 through 97.635 and rounded to the nearest ton, with any fraction of a ton less than 0.50 being deemed to be zero.

(c) *SO_2 emissions requirements.* (1) TR SO_2 Group 1 emissions limitation. (i) As of the allowance transfer deadline for a control period in a given year, the owners and operators of each TR SO_2 Group 1 source and each TR SO_2 Group 1 unit at the source shall hold, in the source's compliance account, TR SO_2 Group 1 allowances available for deduction for such control period under § 97.624(a) in an amount not less than the tons of total SO_2 emissions for such control period from all TR SO_2 Group 1 units at the source.

(ii) If total SO_2 emissions during a control period in a given year from the TR SO_2 Group 1 units at a TR SO_2 Group 1 source are in excess of the TR SO_2 Group 1 emissions limitation set forth in paragraph (c)(1)(i) of this section, then:

(A) The owners and operators of the source and each TR SO_2 Group 1 unit at the source shall hold the TR SO_2 Group 1 allowances required for deduction under § 97.624(d); and

(B) The owners and operators of the source and each TR SO_2 Group 1 unit at the source shall pay any fine, penalty, or assessment or comply with any other remedy imposed, for the same violations, under the Clean Air Act, and each ton of such excess emissions and each day of such control period shall constitute a separate violation of this subpart and the Clean Air Act.

(2) TR SO_2 Group 1 assurance provisions. (i) If total SO_2 emissions during a control period in a given year from all TR SO_2 Group 1 units at TR SO_2 Group 1 sources in a State (and Indian country within the borders of such State) exceed the State assurance level, then the owners and operators of such sources and units in each group of one or more sources and units having a common designated representative for such control period, where the common designated representative's share of such SO_2 emissions during such control period exceeds the common designated representative's assurance level for the State and such control period, shall hold (in the assurance account established for the owners and operators of such group) TR SO_2 Group 1 allowances available for deduction for such control period under § 97.625(a) in an amount equal to two times the product (rounded to the nearest whole number), as determined by the Administrator in accordance with § 97.625(b), of multiplying—

(A) The quotient of the amount by which the common designated representative's share of such SO_2 emissions exceeds the common designated representative's assurance level divided by the sum of the amounts, determined for all common designated representatives for such sources and units in the State (and Indian country within the borders of such State) for such control period, by which each common designated representative's share of such SO_2 emissions exceeds the respective common designated representative's assurance level; and

(B) The amount by which total SO_2 emissions from all TR SO_2 Group 1 units at TR SO_2 Group 1 sources in the State (and Indian country within the borders of such State) for such control period exceed the State assurance level.

(ii) The owners and operators shall hold the TR SO_2 Group 1 allowances required under paragraph (c)(2)(i) of this section, as of midnight of November 1 (if it is a business day), or midnight of the first business day thereafter (if November 1 is not a business day), immediately after such control period.

(iii) Total SO_2 emissions from all TR SO_2 Group 1 units at TR SO_2 Group 1 sources in a State (and Indian country within the borders of such State) during a control period in a given year exceed the State assurance level if such total SO_2 emissions exceed the sum, for such control period, of the State SO_2 Group 1 trading budget under § 97.610(a) and the State's variability limit under § 97.610(b).

(iv) It shall not be a violation of this subpart or of the Clean Air Act if total SO_2 emissions from all TR SO_2 Group 1 units at TR SO_2 Group 1 sources in a State (and Indian country within the borders of such State) during a control period exceed the State assurance level or if a common designated representative's share of total SO_2 emissions from the TR SO_2 Group 1 units at TR SO_2 Group 1 sources in a State (and Indian country within the borders of such State) during a control period exceeds the common designated representative's assurance level.

(v) To the extent the owners and operators fail to hold TR SO_2 Group 1 allowances for a control period in a given year in accordance with paragraphs (c)(2)(i) through (iii) of this section,

(A) The owners and operators shall pay any fine, penalty, or assessment or comply with any other remedy imposed under the Clean Air Act; and

(B) Each TR SO_2 Group 1 allowance that the owners and operators fail to hold for such control period in accordance with paragraphs (c)(2)(i) through (iii) of this section and each day of such control period shall constitute a separate violation of this subpart and the Clean Air Act.

(3) Compliance periods. A TR SO_2 Group 1 unit shall be subject to the requirements under paragraphs (c)(1) and (c)(2) of this section for the control period starting on the later of January 1, 2012 or the deadline for meeting the unit's monitor certification requirements under § 97.630(b) and for each control period thereafter.

(4) Vintage of allowances held for compliance. (i) A TR SO_2 Group 1 allowance held for compliance with the requirements under paragraph (c)(1)(i) of this section for a control period in a given year must be a TR SO_2 Group 1 allowance that was allocated for such control period or a control period in a prior year.

(ii) A TR SO_2 Group 1 allowance held for compliance with the requirements under paragraphs (c)(1)(ii)(A) and (2)(i) through (iii) of this section for a control period in a given year must be a TR SO_2 Group 1 allowance that was allocated for a control period in a prior year or the control period in the given year or in the immediately following year.

(5) Allowance Management System requirements. Each TR SO_2 Group 1 allowance shall be held in, deducted from, or transferred into, out of, or between Allowance Management

System accounts in accordance with this subpart.

(6) Limited authorization. A TR SO_2 Group 1 allowance is a limited authorization to emit one ton of SO_2 during the control period in one year. Such authorization is limited in its use and duration as follows:

(i) Such authorization shall only be used in accordance with the TR SO_2 Group 1 Trading Program; and

(ii) Notwithstanding any other provision of this subpart, the Administrator has the authority to terminate or limit the use and duration of such authorization to the extent the Administrator determines is necessary or appropriate to implement any provision of the Clean Air Act.

(7) Property right. A TR SO_2 Group 1 allowance does not constitute a property right.

(d) *Title V permit requirements.* (1) No title V permit revision shall be required for any allocation, holding, deduction, or transfer of TR SO_2 Group 1 allowances in accordance with this subpart.

(2) A description of whether a unit is required to monitor and report SO_2 emissions using a continuous emission monitoring system (under subpart H of part 75 of this chapter), an excepted monitoring system (under appendices D and E to part 75 of this chapter), a low mass emissions excepted monitoring methodology (under § 75.19 of this chapter), or an alternative monitoring system (under subpart E of part 75 of this chapter) in accordance with §§ 97.630 through 97.635 may be added to, or changed in, a title V permit using minor permit modification procedures in accordance with §§ 70.7(e)(2) and 71.7(e)(1) of this chapter, provided that the requirements applicable to the described monitoring and reporting (as added or changed, respectively) are already incorporated in such permit. This paragraph explicitly provides that the addition of, or change to, a unit's description as described in the prior sentence is eligible for minor permit modification procedures in accordance with §§ 70.7(e)(2)(i)(B) and 71.7(e)(1)(i)(B) of this chapter.

(e) *Additional recordkeeping and reporting requirements.* (1) Unless otherwise provided, the owners and operators of each TR SO_2 Group 1 source and each TR SO_2 Group 1 unit at the source shall keep on site at the source each of the following documents (in hardcopy or electronic format) for a period of 5 years from the date the document is created. This period may be extended for cause, at any time before the end of 5 years, in writing by the Administrator.

(i) The certificate of representation under § 97.616 for the designated representative for the source and each TR SO_2 Group 1 unit at the source and all documents that demonstrate the truth of the statements in the certificate of representation; provided that the certificate and documents shall be retained on site at the source beyond such 5-year period until such certificate of representation and documents are superseded because of the submission of a new certificate of representation under § 97.616 changing the designated representative.

(ii) All emissions monitoring information, in accordance with this subpart.

(iii) Copies of all reports, compliance certifications, and other submissions and all records made or required under, or to demonstrate compliance with the requirements of, the TR SO_2 Group 1 Trading Program.

(2) The designated representative of a TR SO_2 Group 1 source and each TR SO_2 Group 1 unit at the source shall make all submissions required under the TR SO_2 Group 1 Trading Program, except as provided in § 97.618. This requirement does not change, create an exemption from, or or otherwise affect the responsible official submission requirements under a title V operating permit program in parts 70 and 71 of this chapter.

(f) *Liability.* (1) Any provision of the TR SO_2 Group 1 Trading Program that applies to a TR SO_2 Group 1 source or the designated representative of a TR SO_2 Group 1 source shall also apply to the owners and operators of such source and of the TR SO_2 Group 1 units at the source.

(2) Any provision of the TR SO_2 Group 1 Trading Program that applies to a TR SO_2 Group 1 unit or the designated representative of a TR SO_2 Group 1 unit shall also apply to the owners and operators of such unit.

(g) *Effect on other authorities.* No provision of the TR SO_2 Group 1 Trading Program or exemption under § 97.605 shall be construed as exempting or excluding the owners and operators, and the designated representative, of a TR SO_2 Group 1 source or TR SO_2 Group 1 unit from compliance with any other provision of the applicable, approved State implementation plan, a federally enforceable permit, or the Clean Air Act.

§ 97.607 Computation of time.

(a) Unless otherwise stated, any time period scheduled, under the TR SO_2 Group 1 Trading Program, to begin on the occurrence of an act or event shall begin on the day the act or event occurs.

(b) Unless otherwise stated, any time period scheduled, under the TR SO_2 Group 1 Trading Program, to begin before the occurrence of an act or event shall be computed so that the period ends the day before the act or event occurs.

(c) Unless otherwise stated, if the final day of any time period, under the TR SO_2 Group 1 Trading Program, is not a business day, the time period shall be extended to the next business day.

§ 97.608 Administrative appeal procedures.

The administrative appeal procedures for decisions of the Administrator under the TR SO_2 Group 1 Trading Program are set forth in part 78 of this chapter.

§ 97.609 [Reserved]

§ 97.610 State SO_2 Group 1 trading budgets, new unit set-asides, Indian country new unit set-aside, and variability limits.

(a) The State SO_2 Group 1 trading budgets, new unit set-asides, and Indian country new unit set-asides for allocations of TR SO_2 Group 1 allowances for the control periods in 2012 and thereafter are as follows:

State	SO_2 Group 1 trading budget (tons) * for 2012 and 2013	New unit set-aside (tons) for 2012 and 2013	Indian country new unit set-aside (tons) for 2012 and 2013
Illinois	234,889	11,744	.....
Indiana	285,424	8,563	.....
Iowa	107,085	2,035	107
Kentucky	232,662	13,960	.....
Maryland	30,120	602	.....
Michigan	229,303	4,357	229
Missouri	207,466	4,149	.....
New Jersey	5,574	111	.....

State	SO_2 Group 1 trading budget (tons)* for 2012 and 2013	New unit set-aside (tons) for 2012 and 2013	Indian country new unit set-aside (tons) for 2012 and 2013
New York	27,325	520	27
North Carolina	136,881	10,813	137
Ohio	310,230	6,205	
Pennsylvania	278,651	5,573	
Tennessee	148,150	2,963	
Virginia	70,820	2,833	
West Virginia	146,174	10,232	
Wisconsin	79,480	3,894	80

State	SO_2 Group 1 trading budget (tons)* for 2014 and thereafter	New unit set-aside (tons) for 2014 and thereafter	Indian country new unit set-aside (tons) for 2014 and thereafter
Illinois	124,123	6,206	
Indiana	161,111	4,833	
Iowa	75,184	1,429	75
Kentucky	106,284	6,377	
Maryland	28,203	564	
Michigan	143,995	2,736	144
Missouri	165,941	3,319	
New Jersey	5,574	111	
New York	18,585	353	19
North Carolina	57,620	4,552	58
Ohio	137,077	2,742	
Pennsylvania	112,021	2,240	
Tennessee	58,833	1,177	
Virginia	35,057	1,402	
West Virginia	75,668	5,297	
Wisconsin	40,126	1,966	40

* Each trading budget includes the new unit set-aside and, where applicable, the Indian country new unit set-aside and does not include the variability limit.

(b) The States' variability limits for the State SO_2 Group 1 trading budgets for the control periods in 2012 and thereafter are as follows:

State	Variability limits for 2012 and 2013	Variability limits for 2014 and thereafter
Illinois	42,280	22,342
Indiana	51,376	29,000
Iowa	19,275	13,533
Kentucky	41,879	19,131
Maryland	5,422	5,077
Michigan	41,275	25,919
Missouri	37,344	29,869
New Jersey	1,003	1,003
New York	4,919	3,345
North Carolina	24,639	10,372
Ohio	55,841	24,674
Pennsylvania	50,157	20,164
Tennessee	26,667	10,590
Virginia	12,748	6,310
West Virginia	26,311	13,620
Wisconsin	14,306	7,223

§ 97.611 Timing requirements for TR SO_2 Group 1 allowance allocations.

(a) *Existing units.* (1) TR SO_2 Group 1 allowances are allocated, for the control periods in 2012 and each year thereafter, as provided in a notice of data availability issued by the Administrator. Providing an allocation to a unit in such notice does not constitute a determination that the unit is a TR SO_2 Group 1 unit, and not providing an allocation to a unit in such notice does not constitute a determination that the unit is not a TR SO_2 Group 1 unit.

(2) Notwithstanding paragraph (a)(1) of this section, if a unit provided an allocation in the notice of data availability issued under paragraph (a)(1) of this section does not operate, starting after 2011, during the control period in two consecutive years, such unit will not be allocated the TR SO_2 Group 1 allowances provided in such notice for the unit for the control periods in the fifth year after the first such year and in each year after that fifth year. All TR SO_2 Group 1 allowances that would otherwise have been allocated to such unit will be

allocated to the new unit set-aside for the State where such unit is located and for the respective years involved. If such unit resumes operation, the Administrator will allocate TR SO_2 Group 1 allowances to the unit in accordance with paragraph (b) of this section.

(b) *New units.* (1) New unit set-asides. (i) By June 1, 2012 and June 1 of each year thereafter, the Administrator will calculate the TR SO_2 Group 1 allowance allocation to each TR SO_2 Group 1 unit in a State, in accordance with § 97.612(a)(2) through (7) and (12), for the control period in the year of the applicable calculation deadline under this paragraph and will promulgate a notice of data availability of the results of the calculations.

(ii) For each notice of data availability required in paragraph (b)(1)(i) of this section, the Administrator will provide an opportunity for submission of objections to the calculations referenced in such notice.

(A) Objections shall be submitted by the deadline specified in each notice of data availability required in paragraph (b)(1)(i) of this section and shall be limited to addressing whether the calculations (including the identification of the TR SO_2 Group 1 units) are in accordance with § 97.612(a)(2) through (7) and (12) and §§ 97.606(b)(2) and 97.630 through 97.635.

(B) The Administrator will adjust the calculations to the extent necessary to ensure that they are in accordance with the provisions referenced in paragraph (b)(1)(ii)(A) of this section. By August 1 immediately after the promulgation of each notice of data availability required in paragraph (b)(1)(i) of this section, the Administrator will promulgate a notice of data availability of any adjustments that the Administrator determines to be necessary with regard to allocations under § 97.612(a)(2) through (7) and (12) and the reasons for accepting or rejecting any objections submitted in accordance with paragraph (b)(1)(ii)(A) of this section.

(iii) If the new unit set-aside for such control period contains any TR SO_2 Group 1 allowances that have not been allocated in the applicable notice of data availability required in paragraph (b)(1)(ii) of this section, the Administrator will promulgate, by December 15 immediately after such notice, a notice of data availability that identifies any TR SO_2 Group 1 units that commenced commercial operation during the period starting January 1 of the year before the year of such control period and ending November 30 of year of such control period.

(iv) For each notice of data availability required in paragraph (b)(1)(iii) of this section, the Administrator will provide an opportunity for submission of objections to the identification of TR SO_2 annual units in such notice.

(A) Objections shall be submitted by the deadline specified in each notice of data availability required in paragraph (b)(1)(iii) of this section and shall be limited to addressing whether the identification of TR SO_2 annual units in such notice is in accordance with paragraph (b)(1)(iii) of this section.

(B) The Administrator will adjust the identification of TR SO_2 Group 1 units in each notice of data availability required in paragraph (b)(1)(iii) of this section to the extent necessary to ensure that it is in accordance with paragraph (b)(1)(iii) of this section and will calculate the TR SO_2 Group 1 allowance allocation to each TR SO_2 Group 1 unit in accordance with § 97.612(a)(9), (10), and (12) and §§ 97.606(b)(2) and 97.630 through 97.635. By February 15 immediately after the promulgation of each notice of data availability required in paragraph (b)(1)(iii) of this section, the Administrator will promulgate a notice of data availability of any adjustments of the identification of TR SO_2 Group 1 units that the Administrator determines to be necessary, the reasons for accepting or rejecting any objections submitted in accordance with paragraph (b)(1)(iv)(A) of this section, and the results of such calculations.

(v) To the extent any TR SO_2 Group 1 allowances are added to the new unit set-aside after promulgation of each notice of data availability required in paragraph (b)(1)(iv) of this section, the Administrator will promulgate additional notices of data availability, as deemed appropriate, of the allocation of such TR SO_2 Group 1 allowances in accordance with § 97.612(a)(10).

(2) Indian country new unit set-asides. (i) By June 1, 2012 and June 1 of each year thereafter, the Administrator will calculate the TR SO_2 Group 1 allowance allocation to each TR SO_2 Group 1 unit in Indian country within the borders of a State, in accordance with § 97.612(b)(2) through (7) and (12), for the control period in the year of the applicable calculation deadline under this paragraph and will promulgate a notice of data availability of the results of the calculations.

(ii) For each notice of data availability required in paragraph (b)(2)(i) of this section, the Administrator will provide an opportunity for submission of objections to the calculations referenced in such notice.

(A) Objections shall be submitted by the deadline specified in each notice of data availability required in paragraph (b)(2)(i) of this section and shall be limited to addressing whether the calculations (including the identification of the TR SO_2 Group 1 units) are in accordance with § 97.612(b)(2) through (7) and (12) and §§ 97.606(b)(2) and 97.630 through 97.635.

(B) The Administrator will adjust the calculations to the extent necessary to ensure that they are in accordance with the provisions referenced in paragraph (b)(2)(ii)(A) of this section. By August 1 immediately after the promulgation of each notice of data availability required in paragraph (b)(2)(i) of this section, the Administrator will promulgate a notice of data availability of any adjustments that the Administrator determines to be necessary with regard to allocations under § 97.612(b)(2) through (7) and (12) and the reasons for accepting or rejecting any objections submitted in accordance with paragraph (b)(2)(ii)(A) of this section.

(iii) If the Indian country new unit set-aside for such control period contains any TR SO_2 Group 1 allowances that have not been allocated in the applicable notice of data availability required in paragraph (b)(2)(ii) of this section, the Administrator will promulgate, by December 15 immediately after such notice, a notice of data availability that identifies any TR SO_2 Group 1 units that commenced commercial operation during the period starting January 1 of the year before the year of such control period and ending November 30 of year of such control period.

(iv) For each notice of data availability required in paragraph (b)(2)(iii) of this section, the Administrator will provide an opportunity for submission of objections to the identification of TR SO_2 annual units in such notice.

(A) Objections shall be submitted by the deadline specified in each notice of data availability required in paragraph (b)(2)(iii) of this section and shall be limited to addressing whether the identification of TR SO_2 annual units in such notice is in accordance with paragraph (b)(2)(iii) of this section.

(B) The Administrator will adjust the identification of TR SO_2 Group 1 units in each notice of data availability required in paragraph (b)(2)(iii) of this section to the extent necessary to ensure that it is in accordance with paragraph (b)(2)(iii) of this section and will calculate the TR SO_2 Group 1 allowance allocation to each TR SO_2 Group 1 unit in accordance with § 97.612(b)(9), (10),

and (12) and §§ 97.606(b)(2) and 97.630 through 97.635. By February 15 immediately after the promulgation of each notice of data availability required in paragraph (b)(2)(iii) of this section, the Administrator will promulgate a notice of data availability of any adjustments of the identification of TR SO_2 Group 1 units that the Administrator determines to be necessary, the reasons for accepting or rejecting any objections submitted in accordance with paragraph (b)(2)(iv)(A) of this section, and the results of such calculations.

(v) To the extent any TR SO_2 Group 1 allowances are added to the Indian country new unit set-aside after promulgation of each notice of data availability required in paragraph (b)(2)(iv) of this section, the Administrator will promulgate additional notices of data availability, as deemed appropriate, of the allocation of such TR NO_X Annual allowances in accordance with § 97.612(b)(10).

(c) *Units incorrectly allocated TR SO_2* Group 1 allowances. (1) For each control period in 2012 and thereafter, if the Administrator determines that TR SO_2 Group 1 allowances were allocated under paragraph (a) of this section, or under a provision of a SIP revision approved under § 52.39(d), (e), or (f) of this chapter, where such control period and the recipient are covered by the provisions of paragraph (c)(1)(i) of this section or were allocated under § 97.612(a)(2) through (7), (9), and (12) and (b)(2) through (7), (9), and (12), or under a provision of a SIP revision approved under § 52.39(e) or (f) of this chapter, where such control period and the recipient are covered by the provisions of paragraph (c)(1)(ii) of this section, then the Administrator will notify the designated representative of the recipient and will act in accordance with the procedures set forth in paragraphs (c)(2) through (5) of this section:

(i)(A) The recipient is not actually a TR SO_2 Group 1 unit under § 97.604 as of January 1, 2012 and is allocated TR SO_2 Group 1 allowances for such control period or, in the case of an allocation under a provision of a SIP revision approved under § 52.39(d), (e), or (f) of this chapter, the recipient is not actually a TR SO_2 Group 1 unit as of January 1, 2012 and is allocated TR SO_2 Group 1 allowances for such control period that the SIP revision provides should be allocated only to recipients that are TR SO_2 Group 1 units as of January 1, 2012; or

(B) The recipient is not located as of January 1 of the control period in the State from whose SO_2 Group 1 trading budget the TR SO_2 Group 1 allowances allocated under paragraph (a) of this section, or under a provision of a SIP revision approved under § 52.39(d), (e), or (f) of this chapter, were allocated for such control period.

(ii) The recipient is not actually a TR SO_2 Group 1 unit under § 97.604 as of January 1 of such control period and is allocated TR SO_2 Group 1 allowances for such control period or, in the case of an allocation under a provision of a SIP revision approved under § 52.39(d), (e), or (f) of this chapter, the recipient is not actually a TR SO_2 Group 1 unit as of January 1 of such control period and is allocated TR SO_2 Group 1 allowances for such control period that the SIP revision provides should be allocated only to recipients that are TR SO_2 Group 1 units as of January 1 of such control period.

(2) Except as provided in paragraph (c)(3) or (4) of this section, the Administrator will not record such TR SO_2 Group 1 allowances under § 97.621.

(3) If the Administrator already recorded such TR SO_2 Group 1 allowances under § 97.621 and if the Administrator makes the determination under paragraph (c)(1) of this section before making deductions for the source that includes such recipient under § 97.624(b) for such control period, then the Administrator will deduct from the account in which such TR SO_2 Group 1 allowances were recorded an amount of TR SO_2 Group 1 allowances allocated for the same or a prior control period equal to the amount of such already recorded TR SO_2 Group 1 allowances. The authorized account representative shall ensure that there are sufficient TR SO_2 Group 1 allowances in such account for completion of the deduction.

(4) If the Administrator already recorded such TR SO_2 Group 1 allowances under § 97.621 and if the Administrator makes the determination under paragraph (c)(1) of this section after making deductions for the source that includes such recipient under § 97.624(b) for such control period, then the Administrator will not make any deduction to take account of such already recorded TR SO_2 Group 1 allowances.

(5)(i) With regard to the TR SO_2 Group 1 allowances that are not recorded, or that are deducted as an incorrect allocation, in accordance with paragraphs (c)(2) and (3) of this section for a recipient under paragraph (c)(1)(i) of this section, the Administrator will:

(A) Transfer such TR SO_2 Group 1 allowances to the new unit set-aside for such control period for the State from whose SO_2 Group 1 trading budget the TR SO_2 Group 1 allowances were allocated; or

(B) If the State has a SIP revision approved under § 52.39(e) or (f) covering such control period, include such TR SO_2 Group 1 allowances in the portion of the State SO_2 Group 1 trading budget that may be allocated for such control period in accordance with such SIP revision.

(ii) With regard to the TR SO_2 Group 1 allowances that were not allocated from the Indian country new unit set-aside for such control period and that are not recorded, or that are deducted as an incorrect allocation, in accordance with paragraphs (c)(2) and (3) of this section for a recipient under paragraph (c)(1)(ii) of this paragraph, the Administrator will:

(A) Transfer such TR SO_2 Group 1 allowances to the new unit set-aside for such control period; or

(B) If the State has a SIP revision approved under § 52.39(e) or (f) covering such control period, include such TR SO_2 Group 1 allowances in the portion of the State SO_2 Group 1 trading budget that may be allocated for such control period in accordance with such SIP revision.

(iii) With regard to the TR SO_2 Group 1 allowances that were allocated from the Indian country new unit set-aside for such control period and that are not recorded, or that are deducted as an incorrect allocation, in accordance with paragraphs (c)(2) and (3) of this section for a recipient under paragraph (c)(1)(ii) of this paragraph, the Administrator will transfer such TR SO_2 Group 1 allowances to the Indian country new unit set-aside for such control period.

§ 97.612 TR SO_2 Group 1 allowance allocations to new units.

(a) For each control period in 2012 and thereafter and for the TR SO_2 Group 1 units in each State, the Administrator will allocate TR SO_2 Group 1 allowances to the TR SO_2 Group 1 units as follows:

(1) The TR SO_2 Group 1 allowances will be allocated to the following TR SO_2 Group 1 units, except as provided in paragraph (a)(10) of this section:

(i) TR SO_2 Group 1 units that are not allocated an amount of TR SO_2 Group 1 allowances in the notice of data availability issued under § 97.611(a)(1);

(ii) TR SO_2 Group 1 units whose allocation of an amount of TR SO_2 Group 1 allowances for such control period in the notice of data availability issued under § 97.611(a)(1) is covered by § 97.611(c)(2) or (3);

(iii) TR SO_2 Group 1 units that are allocated an amount of TR SO_2 Group 1 allowances for such control period in

the notice of data availability issued under § 97.611(a)(1), which allocation is terminated for such control period pursuant to § 97.611(a)(2), and that operate during the control period immediately preceding such control period; or

(iv) For purposes of paragraph (a)(9) of this section, TR SO_2 Group 1 units under § 97.611(c)(1)(ii) whose allocation of an amount of TR SO_2 Group 1 allowances for such control period in the notice of data availability issued under § 97.611(b)(1)(ii)(B) is covered by § 97.611(c)(2) or (3).

(2) The Administrator will establish a separate new unit set-aside for the State for each such control period. Each such new unit set-aside will be allocated TR SO_2 Group 1 allowances in an amount equal to the applicable amount of tons of SO_2 emissions as set forth in § 97.610(a) and will be allocated additional TR SO_2 Group 1 allowances (if any) in accordance with §§ 97.611(a)(2) and (c)(5) and paragraph (b)(10) of this section.

(3) The Administrator will determine, for each TR SO_2 Group 1 unit described in paragraph (a)(1) of this section, an allocation of TR SO_2 Group 1 allowances for the later of the following control periods and for each subsequent control period:

(i) The control period in 2012;

(ii) The first control period after the control period in which the TR SO_2 Group 1 unit commences commercial operation;

(iii) For a unit described in paragraph (a)(1)(ii) of this section, the first control period in which the TR SO_2 Group 1 unit operates in the State after operating in another jurisdiction and for which the unit is not already allocated one or more TR SO_2 Group 1 allowances; and

(iv) For a unit described in paragraph (a)(1)(iii) of this section, the first control period after the control period in which the unit resumes operation.

(4)(i) The allocation to each TR SO_2 annual unit described in paragraph (a)(1)(i) through (iii) of this section and for each control period described in paragraph (a)(3) of this section will be an amount equal to the unit's total tons of SO_2 emissions during the immediately preceding control period.

(ii) The Administrator will adjust the allocation amount in paragraph (a)(4)(i) in accordance with paragraphs (a)(5) through (7) and (12) of this section.

(5) The Administrator will calculate the sum of the TR SO_2 Group 1 allowances determined for all such TR SO_2 Group 1 units under paragraph (a)(4)(i) of this section in the State for such control period.

(6) If the amount of TR SO_2 Group 1 allowances in the new unit set-aside for the State for such control period is greater than or equal to the sum under paragraph (a)(5) of this section, then the Administrator will allocate the amount of TR SO_2 Group 1 allowances determined for each such TR SO_2 Group 1 unit under paragraph (a)(4)(i) of this section.

(7) If the amount of TR SO_2 Group 1 allowances in the new unit set-aside for the State for such control period is less than the sum under paragraph (a)(5) of this section, then the Administrator will allocate to each such TR SO_2 Group 1 unit the amount of the TR SO_2 Group 1 allowances determined under paragraph (a)(4)(i) of this section for the unit, multiplied by the amount of TR SO_2 Group 1 allowances in the new unit set-aside for such control period, divided by the sum under paragraph (a)(5) of this section, and rounded to the nearest allowance.

(8) The Administrator will notify the public, through the promulgation of the notices of data availability described in § 97.611(b)(1)(i) and (ii), of the amount of TR SO_2 Group 1 allowances allocated under paragraphs (a)(2) through (7) and (12) of this section for such control period to each TR SO_2 Group 1 unit eligible for such allocation.

(9) If, after completion of the procedures under paragraphs (a)(5) through (8) of this section for such control period, any unallocated TR SO_2 Group 1 allowances remain in the new unit set-aside for the State for such control period, the Administrator will allocate such TR SO_2 Group 1 allowances as follows—

(i) The Administrator will determine, for each unit described in paragraph (a)(1) of this section that commenced commercial operation during the period starting January 1 of the year before the year of such control period and ending November 30 of year of such control period, the positive difference (if any) between the unit's emissions during such control period and the amount of TR SO_2 Group 1 allowances referenced in the notice of data availability required under § 97.611(b)(1)(ii) for the unit for such control period;

(ii) The Administrator will determine the sum of the positive differences determined under paragraph (a)(9)(i) of this section;

(iii) If the amount of unallocated TR SO_2 Group 1 allowances remaining in the new unit set-aside for the State for such control period is greater than or equal to the sum determined under paragraph (a)(9)(ii) of this section, then the Administrator will allocate the amount of TR SO_2 Group 1 allowances determined for each such TR SO_2 Group 1 unit under paragraph (a)(9)(i) of this section; and

(iv) If the amount of unallocated TR SO_2 Group 1 allowances remaining in the new unit set-aside for the State for such control period is less than the sum under paragraph (a)(9)(ii) of this section, then the Administrator will allocate to each such TR SO_2 Group 1 unit the amount of the TR SO_2 Group 1 allowances determined under paragraph (a)(9)(i) of this section for the unit, multiplied by the amount of unallocated TR SO_2 Group 1 allowances remaining in the new unit set-aside for such control period, divided by the sum under paragraph (a)(9)(ii) of this section, and rounded to the nearest allowance.

(10) If, after completion of the procedures under paragraphs (a)(9) and (12) of this section for such control period, any unallocated TR SO_2 Group 1 allowances remain in the new unit set-aside for the State for such control period, the Administrator will allocate to each TR SO_2 Group 1 unit that is in the State, is allocated an amount of TR SO_2 Group 1 allowances in the notice of data availability issued under § 97.611(a)(1), and continues to be allocated TR SO_2 Group 1 allowances for such control period in accordance with § 97.611(a)(2), an amount of TR SO_2 Group 1 allowances equal to the following: The total amount of such remaining unallocated TR SO_2 Group 1 allowances in such new unit set-aside, multiplied by the unit's allocation under § 97.611(a) for such control period, divided by the remainder of the amount of tons in the applicable State SO_2 Group 1 trading budget minus the sum of the amounts of tons in such new unit set-aside and the Indian country new unit set-aside for the State for such control period, and rounded to the nearest allowance.

(11) The Administrator will notify the public, through the promulgation of the notices of data availability described in § 97.611(b)(1)(iii), (iv), and (v), of the amount of TR SO_2 Group 1 allowances allocated under paragraphs (a)(9), (10), and (12) of this section for such control period to each TR SO_2 Group 1 unit eligible for such allocation.

(12)(i) Notwithstanding the requirements of paragraphs (a)(2) through (11) of this section, if the calculations of allocations of a new unit set-aside for a control period in a given year under paragraph (a)(7) of this section, paragraphs (a)(6) and (9)(iv) of this section, or paragraphs (a)(6), (9)(iii), and (10) of this section would otherwise result in total allocations of such new unit set-aside exceeding the total amount of such new unit set-aside, then

the Administrator will adjust the results of the calculations under paragraph (a)(7), (9)(iv), or (10) of this section, as applicable, as follows. The Administrator will list the TR SO_2 Group 1 units in descending order based on the amount of such units' allocations under paragraph (a)(7), (9)(iv), or (10) of this section, as applicable, and, in cases of equal allocation amounts, in alphabetical order of the relevant source's name and numerical order of the relevant unit's identification number, and will reduce each unit's allocation under paragraph (a)(7), (9)(iv), or (10) of this section, as applicable, by one TR SO_2 Group 1 allowance (but not below zero) in the order in which the units are listed and will repeat this reduction process as necessary, until the total allocations of such new unit set-aside equal the total amount of such new unit set-aside.

(ii) Notwithstanding the requirements of paragraphs (a)(10) and (11) of this section, if the calculations of allocations of a new unit set-aside for a control period in a given year under paragraphs (a)(6), (9)(iii), and (10) of this section would otherwise result in a total allocations of such new unit set-aside less than the total amount of such new unit set-aside, then the Administrator will adjust the results of the calculations under paragraph (a)(10) of this section, as follows. The Administrator will list the TR SO_2 Group 1 units in descending order based on the amount of such units' allocations under paragraph (a)(10) of this section and, in cases of equal allocation amounts, in alphabetical order of the relevant source's name and numerical order of the relevant unit's identification number, and will increase each unit's allocation under paragraph (a)(10) of this section by one TR SO_2 Group 1 allowance in the order in which the units are listed and will repeat this increase process as necessary, until the total allocations of such new unit set-aside equal the total amount of such new unit set-aside.

(b) For each control period in 2012 and thereafter and for the TR SO_2 Group 1 units located in Indian country within the borders of each State, the Administrator will allocate TR SO_2 Group 1 allowances to the TR SO_2 Group 1 units as follows:

(1) The TR SO_2 Group 1 allowances will be allocated to the following TR SO_2 Group 1 units, except as provided in paragraph (b)(10) of this section:

(i) TR SO_2 Group 1 units that are not allocated an amount of TR SO_2 Group 1 allowances in the notice of data availability issued under § 97.611(a)(1); or

(ii) For purposes of paragraph (b)(9) of this section, TR SO_2 Group 1 units under § 97.611(c)(1)(ii) whose allocation of an amount of TR SO_2 Group 1 allowances for such control period in the notice of data availability issued under § 97.611(b)(2)(ii)(B) is covered by § 97.611(c)(2) or (3).

(2) The Administrator will establish a separate Indian country new unit set-aside for the State for each such control period. Each such Indian country new unit set-aside will be allocated TR SO_2 Group 1 allowances in an amount equal to the applicable amount of tons of SO_2 emissions as set forth in § 97.610(a) and will be allocated additional TR SO_2 Group 1 allowances (if any) in accordance with § 97.611(c)(5).

(3) The Administrator will determine, for each TR SO_2 Group 1 unit described in paragraph (b)(1) of this section, an allocation of TR SO_2 Group 1 allowances for the later of the following control periods and for each subsequent control period:

(i) The control period in 2012; and

(ii) The first control period after the control period in which the TR SO_2 Group 1 unit commences commercial operation.

(4)(i) The allocation to each TR SO_2 annual unit described in paragraph (b)(1)(i) of this section and for each control period described in paragraph (b)(3) of this section will be an amount equal to the unit's total tons of SO_2 emissions during the immediately preceding control period.

(ii) The Administrator will adjust the allocation amount in paragraph (b)(4)(i) in accordance with paragraphs (b)(5) through (7) and (12) of this section.

(5) The Administrator will calculate the sum of the TR SO_2 Group 1 allowances determined for all such TR SO_2 Group 1 units under paragraph (b)(4)(i) of this section in Indian country within the borders of the State for such control period.

(6) If the amount of TR SO_2 Group 1 allowances in the Indian country new unit set-aside for the State for such control period is greater than or equal to the sum under paragraph (b)(5) of this section, then the Administrator will allocate the amount of TR SO_2 Group 1 allowances determined for each such TR SO_2 Group 1 unit under paragraph (b)(4)(i) of this section.

(7) If the amount of TR SO_2 Group 1 allowances in the Indian country new unit set-aside for the State for such control period is less than the sum under paragraph (b)(5) of this section, then the Administrator will allocate to each such TR SO_2 Group 1 unit the amount of the TR SO_2 Group 1 allowances determined under paragraph (b)(4)(i) of this section for the unit, multiplied by the amount of TR SO_2 Group 1 allowances in the Indian country new unit set-aside for such control period, divided by the sum under paragraph (b)(5) of this section, and rounded to the nearest allowance.

(8) The Administrator will notify the public, through the promulgation of the notices of data availability described in § 97.611(b)(2)(i) and (ii), of the amount of TR SO_2 Group 1 allowances allocated under paragraphs (b)(2) through (7) and (12) of this section for such control period to each TR SO_2 Group 1 unit eligible for such allocation.

(9) If, after completion of the procedures under paragraphs (b)(5) through (8) of this section for such control period, any unallocated TR SO_2 Group 1 allowances remain in the Indian country new unit set-aside for the State for such control period, the Administrator will allocate such TR SO_2 Group 1 allowances as follows—

(i) The Administrator will determine, for each unit described in paragraph (b)(1) of this section that commenced commercial operation during the period starting January 1 of the year before the year of such control period and ending November 30 of year of such control period, the positive difference (if any) between the unit's emissions during such control period and the amount of TR SO_2 Group 1 allowances referenced in the notice of data availability required under § 97.611(b)(2)(ii) for the unit for such control period;

(ii) The Administrator will determine the sum of the positive differences determined under paragraph (b)(9)(i) of this section;

(iii) If the amount of unallocated TR SO_2 Group 1 allowances remaining in the Indian country new unit set-aside for the State for such control period is greater than or equal to the sum determined under paragraph (b)(9)(ii) of this section, then the Administrator will allocate the amount of TR SO_2 Group 1 allowances determined for each such TR SO_2 Group 1 unit under paragraph (b)(9)(i) of this section; and

(iv) If the amount of unallocated TR SO_2 Group 1 allowances remaining in the Indian country new unit set-aside for the State for such control period is less than the sum under paragraph (b)(9)(ii) of this section, then the Administrator will allocate to each such TR SO_2 Group 1 unit the amount of the TR SO_2 Group 1 allowances determined under paragraph (b)(9)(i) of this section for the unit, multiplied by the amount of unallocated TR SO_2 Group 1 allowances remaining in the Indian country new unit set-aside for such control period, divided by the sum

under paragraph (b)(9)(ii) of this section, and rounded to the nearest allowance.

(10) If, after completion of the procedures under paragraphs (b)(9) and (12) of this section for such control period, any unallocated TR SO_2 Group 1 allowances remain in the Indian country new unit set-aside for the State for such control period, the Administrator will:

(i) Transfer such unallocated TR SO_2 Group 1 allowances to the new unit set-aside for the State for such control period; or

(ii) If the State has a SIP revision approved under § 52.39(d), (e), or (f) of this chapter covering such control period, include such unallocated TR SO_2 Group 1 allowances in the portion of the State SO_2 Group 1 trading budget that may be allocated for such control period in accordance with such SIP revision.

(11) The Administrator will notify the public, through the promulgation of the notices of data availability described in § 97.611(b)(2)(iii), (iv), and (v), of the amount of TR SO_2 Group 1 allowances allocated under paragraphs (b)(9), (10), and (12) for such control period to each TR SO_2 Group 1 unit eligible for such allocation.

(12)(i) Notwithstanding the requirements of paragraphs (b)(2) through (11) of this section, if the calculations of allocations of an Indian country new unit set-aside for a control period in a given year under paragraph (b)(7) of this section, paragraphs (b)(6) and (9)(iv) of this section, or paragraphs (b)(6), (9)(iii), and (10) of this section would otherwise result in total allocations of such Indian country new unit set-aside exceeding the total amount of such Indian country new unit set-aside, then the Administrator will adjust the results of the calculations under paragraph (b)(7), (9)(iv), or (10) of this section, as applicable, as follows. The Administrator will list the TR SO_2 Group 1 units in descending order based on the amount of such units' allocations under paragraph (b)(7), (9)(iv), or (10) of this section, as applicable, and, in cases of equal allocation amounts, in alphabetical order of the relevant source's name and numerical order of the relevant unit's identification number, and will reduce each unit's allocation under paragraph (b)(7), (9)(iv), or (10) of this section, as applicable, by one TR SO_2 Group 1 allowance (but not below zero) in the order in which the units are listed and will repeat this reduction process as necessary, until the total allocations of such Indian country new unit set-aside equal the total amount of such Indian country new unit set-aside.

(ii) Notwithstanding the requirements of paragraphs (b)(10) and (11) of this section, if the calculations of allocations of an Indian country new unit set-aside for a control period in a given year under paragraphs (b)(6), (9)(iii), and (10) of this section would otherwise result in a total allocations of such Indian country new unit set-aside less than the total amount of such Indian country new unit set-aside, then the Administrator will adjust the results of the calculations under paragraph (b)(10) of this section, as follows. The Administrator will list the TR SO_2 Group 1 units in descending order based on the amount of such units' allocations under paragraph (b)(10) of this section and, in cases of equal allocation amounts, in alphabetical order of the relevant source's name and numerical order of the relevant unit's identification number, and will increase each unit's allocation under paragraph (b)(10) of this section by one TR SO_2 Group 1 allowance in the order in which the units are listed and will repeat this increase process as necessary, until the total allocations of such Indian country new unit set-aside equal the total amount of such Indian country new unit set-aside.

§ 97.613 Authorization of designated representative and alternate designated representative.

(a) Except as provided under § 97.615, each TR SO_2 Group 1 source, including all TR SO_2 Group 1 units at the source, shall have one and only one designated representative, with regard to all matters under the TR SO_2 Group 1 Trading Program.

(1) The designated representative shall be selected by an agreement binding on the owners and operators of the source and all TR SO_2 Group 1 units at the source and shall act in accordance with the certification statement in § 97.616(a)(4)(iii).

(2) Upon and after receipt by the Administrator of a complete certificate of representation under § 97.616:

(i) The designated representative shall be authorized and shall represent and, by his or her representations, actions, inactions, or submissions, legally bind each owner and operator of the source and each TR SO_2 Group 1 unit at the source in all matters pertaining to the TR SO_2 Group 1 Trading Program, notwithstanding any agreement between the designated representative and such owners and operators; and

(ii) The owners and operators of the source and each TR SO_2 Group 1 unit at the source shall be bound by any decision or order issued to the designated representative by the Administrator regarding the source or any such unit.

(b) Except as provided under § 97.615, each TR SO_2 Group 1 source may have one and only one alternate designated representative, who may act on behalf of the designated representative. The agreement by which the alternate designated representative is selected shall include a procedure for authorizing the alternate designated representative to act in lieu of the designated representative.

(1) The alternate designated representative shall be selected by an agreement binding on the owners and operators of the source and all TR SO_2 Group 1 units at the source and shall act in accordance with the certification statement in § 97.616(a)(4)(iii).

(2) Upon and after receipt by the Administrator of a complete certificate of representation under § 97.616,

(i) The alternate designated representative shall be authorized;

(ii) Any representation, action, inaction, or submission by the alternate designated representative shall be deemed to be a representation, action, inaction, or submission by the designated representative; and

(iii) The owners and operators of the source and each TR SO_2 Group 1 unit at the source shall be bound by any decision or order issued to the alternate designated representative by the Administrator regarding the source or any such unit.

(c) Except in this section, § 97.602, and §§ 97.614 through 97.618, whenever the term ''designated representative'' (as distinguished from the term ''common designated representative'') is used in this subpart, the term shall be construed to include the designated representative or any alternate designated representative.

§ 97.614 Responsibilities of designated representative and alternate designated representative.

(a) Except as provided under § 97.618 concerning delegation of authority to make submissions, each submission under the TR SO_2 Group 1 Trading Program shall be made, signed, and certified by the designated representative or alternate designated representative for each TR SO_2 Group 1 source and TR SO_2 Group 1 unit for which the submission is made. Each such submission shall include the following certification statement by the designated representative or alternate designated representative: ''I am authorized to make this submission on behalf of the owners and operators of the source or units for which the submission is made. I certify under

penalty of law that I have personally examined, and am familiar with, the statements and information submitted in this document and all its attachments. Based on my inquiry of those individuals with primary responsibility for obtaining the information, I certify that the statements and information are to the best of my knowledge and belief true, accurate, and complete. I am aware that there are significant penalties for submitting false statements and information or omitting required statements and information, including the possibility of fine or imprisonment.''

(b) The Administrator will accept or act on a submission made for a TR SO_2 Group 1 source or a TR SO_2 Group 1 unit only if the submission has been made, signed, and certified in accordance with paragraph (a) of this section and § 97.618.

§ 97.615 Changing designated representative and alternate designated representative; changes in owners and operators; changes in units at the source.

(a) *Changing designated representative.* The designated representative may be changed at any time upon receipt by the Administrator of a superseding complete certificate of representation under § 97.616. Notwithstanding any such change, all representations, actions, inactions, and submissions by the previous designated representative before the time and date when the Administrator receives the superseding certificate of representation shall be binding on the new designated representative and the owners and operators of the TR SO_2 Group 1 source and the TR SO_2 Group 1 units at the source.

(b) *Changing alternate designated representative.* The alternate designated representative may be changed at any time upon receipt by the Administrator of a superseding complete certificate of representation under § 97.616. Notwithstanding any such change, all representations, actions, inactions, and submissions by the previous alternate designated representative before the time and date when the Administrator receives the superseding certificate of representation shall be binding on the new alternate designated representative, the designated representative, and the owners and operators of the TR SO_2 Group 1 source and the TR SO_2 Group 1 units at the source.

(c) *Changes in owners and operators.* (1) In the event an owner or operator of a TR SO_2 Group 1 source or a TR SO_2 Group 1 unit at the source is not included in the list of owners and operators in the certificate of representation under § 97.616, such owner or operator shall be deemed to be subject to and bound by the certificate of representation, the representations, actions, inactions, and submissions of the designated representative and any alternate designated representative of the source or unit, and the decisions and orders of the Administrator, as if the owner or operator were included in such list.

(2) Within 30 days after any change in the owners and operators of a TR SO_2 Group 1 source or a TR SO_2 Group 1 unit at the source, including the addition or removal of an owner or operator, the designated representative or any alternate designated representative shall submit a revision to the certificate of representation under § 97.616 amending the list of owners and operators to reflect the change.

(d) *Changes in units at the source.* Within 30 days of any change in which units are located at a TR SO_2 Group 1 source (including the addition or removal of a unit), the designated representative or any alternate designated representative shall submit a certificate of representation under § 97.616 amending the list of units to reflect the change.

(1) If the change is the addition of a unit that operated (other than for purposes of testing by the manufacturer before initial installation) before being located at the source, then the certificate of representation shall identify, in a format prescribed by the Administrator, the entity from whom the unit was purchased or otherwise obtained (including name, address, telephone number, and facsimile number (if any)), the date on which the unit was purchased or otherwise obtained, and the date on which the unit became located at the source.

(2) If the change is the removal of a unit, then the certificate of representation shall identify, in a format prescribed by the Administrator, the entity to which the unit was sold or that otherwise obtained the unit (including name, address, telephone number, and facsimile number (if any)), the date on which the unit was sold or otherwise obtained, and the date on which the unit became no longer located at the source.

§ 97.616 Certificate of representation.

(a) A complete certificate of representation for a designated representative or an alternate designated representative shall include the following elements in a format prescribed by the Administrator:

(1) Identification of the TR SO_2 Group 1 source, and each TR SO_2 Group 1 unit at the source, for which the certificate of representation is submitted, including source name, source category and NAICS code (or, in the absence of a NAICS code, an equivalent code), State, plant code, county, latitude and longitude, unit identification number and type, identification number and nameplate capacity (in MWe, rounded to the nearest tenth) of each generator served by each such unit, actual or projected date of commencement of commercial operation, and a statement of whether such source is located in Indian Country. If a projected date of commencement of commercial operation is provided, the actual date of commencement of commercial operation shall be provided when such information becomes available.

(2) The name, address, e-mail address (if any), telephone number, and facsimile transmission number (if any) of the designated representative and any alternate designated representative.

(3) A list of the owners and operators of the TR SO_2 Group 1 source and of each TR SO_2 Group 1 unit at the source.

(4) The following certification statements by the designated representative and any alternate designated representative—

(i) ''I certify that I was selected as the designated representative or alternate designated representative, as applicable, by an agreement binding on the owners and operators of the source and each TR SO_2 Group 1 unit at the source.''

(ii) ''I certify that I have all the necessary authority to carry out my duties and responsibilities under the TR SO_2 Group 1 Trading Program on behalf of the owners and operators of the source and of each TR SO_2 Group 1 unit at the source and that each such owner and operator shall be fully bound by my representations, actions, inactions, or submissions and by any decision or order issued to me by the Administrator regarding the source or unit.''

(iii) ''Where there are multiple holders of a legal or equitable title to, or a leasehold interest in, a TR SO_2 Group 1 unit, or where a utility or industrial customer purchases power from a TR SO_2 Group 1 unit under a life-of-the-unit, firm power contractual arrangement, I certify that: I have given a written notice of my selection as the 'designated representative' or 'alternate designated representative', as applicable, and of the agreement by which I was selected to each owner and operator of the source and of each TR SO_2 Group 1 unit at the source; and TR SO_2 Group 1 allowances and proceeds of transactions involving TR SO_2 Group 1 allowances will be deemed to be held or distributed in proportion to each

holder's legal, equitable, leasehold, or contractual reservation or entitlement, except that, if such multiple holders have expressly provided for a different distribution of TR SO_2 Group 1 allowances by contract, TR SO_2 Group 1 allowances and proceeds of transactions involving TR SO_2 Group 1 allowances will be deemed to be held or distributed in accordance with the contract.''

(5) The signature of the designated representative and any alternate designated representative and the dates signed.

(b) Unless otherwise required by the Administrator, documents of agreement referred to in the certificate of representation shall not be submitted to the Administrator. The Administrator shall not be under any obligation to review or evaluate the sufficiency of such documents, if submitted.

§ 97.617 Objections concerning designated representative and alternate designated representative.

(a) Once a complete certificate of representation under § 97.616 has been submitted and received, the Administrator will rely on the certificate of representation unless and until a superseding complete certificate of representation under § 97.616 is received by the Administrator.

(b) Except as provided in paragraph (a) of this section, no objection or other communication submitted to the Administrator concerning the authorization, or any representation, action, inaction, or submission, of a designated representative or alternate designated representative shall affect any representation, action, inaction, or submission of the designated representative or alternate designated representative or the finality of any decision or order by the Administrator under the TR SO_2 Group 1 Trading Program.

(c) The Administrator will not adjudicate any private legal dispute concerning the authorization or any representation, action, inaction, or submission of any designated representative or alternate designated representative, including private legal disputes concerning the proceeds of TR SO_2 Group 1 allowance transfers.

§ 97.618 Delegation by designated representative and alternate designated representative.

(a) A designated representative may delegate, to one or more natural persons, his or her authority to make an electronic submission to the Administrator provided for or required under this subpart.

(b) An alternate designated representative may delegate, to one or more natural persons, his or her authority to make an electronic submission to the Administrator provided for or required under this subpart.

(c) In order to delegate authority to a natural person to make an electronic submission to the Administrator in accordance with paragraph (a) or (b) of this section, the designated representative or alternate designated representative, as appropriate, must submit to the Administrator a notice of delegation, in a format prescribed by the Administrator, that includes the following elements:

(1) The name, address, e-mail address, telephone number, and facsimile transmission number (if any) of such designated representative or alternate designated representative;

(2) The name, address, e-mail address, telephone number, and facsimile transmission number (if any) of each such natural person (referred to in this section as an ''agent'');

(3) For each such natural person, a list of the type or types of electronic submissions under paragraph (a) or (b) of this section for which authority is delegated to him or her; and

(4) The following certification statements by such designated representative or alternate designated representative:

(i) ''I agree that any electronic submission to the Administrator that is made by an agent identified in this notice of delegation and of a type listed for such agent in this notice of delegation and that is made when I am a designated representative or alternate designated representative, as appropriate, and before this notice of delegation is superseded by another notice of delegation under 40 CFR 97.618(d) shall be deemed to be an electronic submission by me.''

(ii) ''Until this notice of delegation is superseded by another notice of delegation under 40 CFR 97.618(d), I agree to maintain an e-mail account and to notify the Administrator immediately of any change in my e-mail address unless all delegation of authority by me under 40 CFR 97.618 is terminated.''.

(d) A notice of delegation submitted under paragraph (c) of this section shall be effective, with regard to the designated representative or alternate designated representative identified in such notice, upon receipt of such notice by the Administrator and until receipt by the Administrator of a superseding notice of delegation submitted by such designated representative or alternate designated representative, as appropriate. The superseding notice of delegation may replace any previously identified agent, add a new agent, or eliminate entirely any delegation of authority.

(e) Any electronic submission covered by the certification in paragraph (c)(4)(i) of this section and made in accordance with a notice of delegation effective under paragraph (d) of this section shall be deemed to be an electronic submission by the designated representative or alternate designated representative submitting such notice of delegation.

§ 97.619 [Reserved]

§ 97.620 Establishment of compliance accounts, assurance accounts, and general accounts.

(a) *Compliance accounts.* Upon receipt of a complete certificate of representation under § 97.616, the Administrator will establish a compliance account for the TR SO_2 Group 1 source for which the certificate of representation was submitted, unless the source already has a compliance account. The designated representative and any alternate designated representative of the source shall be the authorized account representative and the alternate authorized account representative respectively of the compliance account.

(b) *Assurance accounts.* The Administrator will establish assurance accounts for certain owners and operators and States in accordance with § 97.625(b)(3).

(c) *General accounts.* (1) Application for general account. (i) Any person may apply to open a general account, for the purpose of holding and transferring TR SO_2 Group 1 allowances, by submitting to the Administrator a complete application for a general account. Such application shall designate one and only one authorized account representative and may designate one and only one alternate authorized account representative who may act on behalf of the authorized account representative.

(A) The authorized account representative and alternate authorized account representative shall be selected by an agreement binding on the persons who have an ownership interest with respect to TR SO_2 Group 1 allowances held in the general account.

(B) The agreement by which the alternate authorized account representative is selected shall include a procedure for authorizing the alternate authorized account representative to act in lieu of the authorized account representative.

(ii) A complete application for a general account shall include the

following elements in a format prescribed by the Administrator:

(A) Name, mailing address, e-mail address (if any), telephone number, and facsimile transmission number (if any) of the authorized account representative and any alternate authorized account representative;

(B) An identifying name for the general account;

(C) A list of all persons subject to a binding agreement for the authorized account representative and any alternate authorized account representative to represent their ownership interest with respect to the TR SO_2 Group 1 allowances held in the general account;

(D) The following certification statement by the authorized account representative and any alternate authorized account representative: ''I certify that I was selected as the authorized account representative or the alternate authorized account representative, as applicable, by an agreement that is binding on all persons who have an ownership interest with respect to TR SO_2 Group 1 allowances held in the general account. I certify that I have all the necessary authority to carry out my duties and responsibilities under the TR SO_2 Group 1 Trading Program on behalf of such persons and that each such person shall be fully bound by my representations, actions, inactions, or submissions and by any decision or order issued to me by the Administrator regarding the general account.''

(E) The signature of the authorized account representative and any alternate authorized account representative and the dates signed.

(iii) Unless otherwise required by the Administrator, documents of agreement referred to in the application for a general account shall not be submitted to the Administrator. The Administrator shall not be under any obligation to review or evaluate the sufficiency of such documents, if submitted.

(2) Authorization of authorized account representative and alternate authorized account representative. (i) Upon receipt by the Administrator of a complete application for a general account under paragraph (b)(1) of this section, the Administrator will establish a general account for the person or persons for whom the application is submitted, and upon and after such receipt by the Administrator:

(A) The authorized account representative of the general account shall be authorized and shall represent and, by his or her representations, actions, inactions, or submissions, legally bind each person who has an ownership interest with respect to TR SO_2 Group 1 allowances held in the general account in all matters pertaining to the TR SO_2 Group 1 Trading Program, notwithstanding any agreement between the authorized account representative and such person.

(B) Any alternate authorized account representative shall be authorized, and any representation, action, inaction, or submission by any alternate authorized account representative shall be deemed to be a representation, action, inaction, or submission by the authorized account representative.

(C) Each person who has an ownership interest with respect to TR SO_2 Group 1 allowances held in the general account shall be bound by any decision or order issued to the authorized account representative or alternate authorized account representative by the Administrator regarding the general account.

(ii) Except as provided in paragraph (c)(5) of this section concerning delegation of authority to make submissions, each submission concerning the general account shall be made, signed, and certified by the authorized account representative or any alternate authorized account representative for the persons having an ownership interest with respect to TR SO_2 Group 1 allowances held in the general account. Each such submission shall include the following certification statement by the authorized account representative or any alternate authorized account representative: ''I am authorized to make this submission on behalf of the persons having an ownership interest with respect to the TR SO_2 Group 1 allowances held in the general account. I certify under penalty of law that I have personally examined, and am familiar with, the statements and information submitted in this document and all its attachments. Based on my inquiry of those individuals with primary responsibility for obtaining the information, I certify that the statements and information are to the best of my knowledge and belief true, accurate, and complete. I am aware that there are significant penalties for submitting false statements and information or omitting required statements and information, including the possibility of fine or imprisonment.''

(iii) Except in this section, whenever the term ''authorized account representative'' is used in this subpart, the term shall be construed to include the authorized account representative or any alternate authorized account representative.

(3) Changing authorized account representative and alternate authorized account representative; changes in persons with ownership interest. (i) The authorized account representative of a general account may be changed at any time upon receipt by the Administrator of a superseding complete application for a general account under paragraph (c)(1) of this section. Notwithstanding any such change, all representations, actions, inactions, and submissions by the previous authorized account representative before the time and date when the Administrator receives the superseding application for a general account shall be binding on the new authorized account representative and the persons with an ownership interest with respect to the TR SO_2 Group 1 allowances in the general account.

(ii) The alternate authorized account representative of a general account may be changed at any time upon receipt by the Administrator of a superseding complete application for a general account under paragraph (c)(1) of this section. Notwithstanding any such change, all representations, actions, inactions, and submissions by the previous alternate authorized account representative before the time and date when the Administrator receives the superseding application for a general account shall be binding on the new alternate authorized account representative, the authorized account representative, and the persons with an ownership interest with respect to the TR SO_2 Group 1 allowances in the general account.

(iii)(A) In the event a person having an ownership interest with respect to TR SO_2 Group 1 allowances in the general account is not included in the list of such persons in the application for a general account, such person shall be deemed to be subject to and bound by the application for a general account, the representation, actions, inactions, and submissions of the authorized account representative and any alternate authorized account representative of the account, and the decisions and orders of the Administrator, as if the person were included in such list.

(B) Within 30 days after any change in the persons having an ownership interest with respect to SO_2 Group 1 allowances in the general account, including the addition or removal of a person, the authorized account representative or any alternate authorized account representative shall submit a revision to the application for a general account amending the list of persons having an ownership interest with respect to the TR SO_2 Group 1 allowances in the general account to include the change.

(4) Objections concerning authorized account representative and alternate

authorized account representative. (i) Once a complete application for a general account under paragraph (c)(1) of this section has been submitted and received, the Administrator will rely on the application unless and until a superseding complete application for a general account under paragraph (b)(1) of this section is received by the Administrator.

(ii) Except as provided in paragraph (c)(4)(i) of this section, no objection or other communication submitted to the Administrator concerning the authorization, or any representation, action, inaction, or submission of the authorized account representative or any alternate authorized account representative of a general account shall affect any representation, action, inaction, or submission of the authorized account representative or any alternate authorized account representative or the finality of any decision or order by the Administrator under the TR SO_2 Group 1 Trading Program.

(iii) The Administrator will not adjudicate any private legal dispute concerning the authorization or any representation, action, inaction, or submission of the authorized account representative or any alternate authorized account representative of a general account, including private legal disputes concerning the proceeds of TR SO_2 Group 1 allowance transfers.

(5) Delegation by authorized account representative and alternate authorized account representative. (i) An authorized account representative of a general account may delegate, to one or more natural persons, his or her authority to make an electronic submission to the Administrator provided for or required under this subpart.

(ii) An alternate authorized account representative of a general account may delegate, to one or more natural persons, his or her authority to make an electronic submission to the Administrator provided for or required under this subpart.

(iii) In order to delegate authority to a natural person to make an electronic submission to the Administrator in accordance with paragraph (c)(5)(i) or (ii) of this section, the authorized account representative or alternate authorized account representative, as appropriate, must submit to the Administrator a notice of delegation, in a format prescribed by the Administrator, that includes the following elements:

(A) The name, address, e-mail address, telephone number, and facsimile transmission number (if any) of such authorized account representative or alternate authorized account representative;

(B) The name, address, e-mail address, telephone number, and facsimile transmission number (if any) of each such natural person (referred to in this section as an ''agent'');

(C) For each such natural person, a list of the type or types of electronic submissions under paragraph (c)(5)(i) or (ii) of this section for which authority is delegated to him or her;

(D) The following certification statement by such authorized account representative or alternate authorized account representative: ''I agree that any electronic submission to the Administrator that is made by an agent identified in this notice of delegation and of a type listed for such agent in this notice of delegation and that is made when I am an authorized account representative or alternate authorized representative, as appropriate, and before this notice of delegation is superseded by another notice of delegation under 40 CFR 97.620(c)(5)(iv) shall be deemed to be an electronic submission by me.''; and

(E) The following certification statement by such authorized account representative or alternate authorized account representative: ''Until this notice of delegation is superseded by another notice of delegation under 40 CFR 97.620(c)(5)(iv), I agree to maintain an e-mail account and to notify the Administrator immediately of any change in my e-mail address unless all delegation of authority by me under 40 CFR 97.620(c)(5) is terminated.''.

(iv) A notice of delegation submitted under paragraph (c)(5)(iii) of this section shall be effective, with regard to the authorized account representative or alternate authorized account representative identified in such notice, upon receipt of such notice by the Administrator and until receipt by the Administrator of a superseding notice of delegation submitted by such authorized account representative or alternate authorized account representative, as appropriate. The superseding notice of delegation may replace any previously identified agent, add a new agent, or eliminate entirely any delegation of authority.

(v) Any electronic submission covered by the certification in paragraph (c)(5)(iii)(D) of this section and made in accordance with a notice of delegation effective under paragraph (c)(5)(iv) of this section shall be deemed to be an electronic submission by the designated representative or alternate designated representative submitting such notice of delegation.

(6) Closing a general account. (i) The authorized account representative or alternate authorized account representative of a general account may submit to the Administrator a request to close the account. Such request shall include a correctly submitted TR SO_2 Group 1 allowance transfer under § 97.622 for any TR SO_2 Group 1 allowances in the account to one or more other Allowance Management System accounts.

(ii) If a general account has no TR SO_2 Group 1 allowance transfers to or from the account for a 12-month period or longer and does not contain any TR SO_2 Group 1 allowances, the Administrator may notify the authorized account representative for the account that the account will be closed after 30 days after the notice is sent. The account will be closed after the 30-day period unless, before the end of the 30-day period, the Administrator receives a correctly submitted TR SO_2 Group 1 allowance transfer under § 97.622 to the account or a statement submitted by the authorized account representative or alternate authorized account representative demonstrating to the satisfaction of the Administrator good cause as to why the account should not be closed.

(d) *Account identification.* The Administrator will assign a unique identifying number to each account established under paragraph (a), (b), or (c) of this section.

(e) *Responsibilities of authorized account representative and alternate authorized account representative.* After the establishment of a compliance account or general account, the Administrator will accept or act on a submission pertaining to the account, including, but not limited to, submissions concerning the deduction or transfer of TR SO_2 Group 1 allowances in the account, only if the submission has been made, signed, and certified in accordance with §§ 97.614(a) and 97.618 or paragraphs (c)(2)(ii) and (c)(5) of this section.

§ 97.621 Recordation of TR SO_2 Group 1 allowance allocations and auction results.

(a) By November 7, 2011, the Administrator will record in each TR SO_2 Group 1 source's compliance account the TR SO_2 Group 1 allowances allocated to the TR SO_2 Group 1 units at the source in accordance with § 97.611(a) for the control period in 2012.

(b) By November 7, 2011, the Administrator will record in each TR SO_2 Group 1 source's compliance account the TR SO_2 Group 1 allowances allocated to the TR SO_2 Group 1 units at the source in accordance with

§ 97.611(a) for the control period in 2013, unless the State in which the source is located notifies the Administrator in writing by October 17, 2011 of the State's intent to submit to the Administrator a complete SIP revision by April 1, 2012 meeting the requirements of § 52.39(d)(1) through (4) of this chapter.

(1) If, by April 1, 2012, the State does not submit to the Administrator such complete SIP revision, the Administrator will record by April 15, 2012 in each TR SO_2 Group 1 source's compliance account the TR SO_2 Group 1 allowances allocated to the TR SO_2 Group 1 units at the source in accordance with § 97.611(a) for the control period in 2013.

(2) If the State submits to the Administrator by April 1, 2012, and the Administrator approves by October 1, 2012, such complete SIP revision, the Administrator will record by October 1, 2012 in each TR SO_2 Group 1 source's compliance account the TR SO_2 Group 1 allowances allocated to the TR SO_2 Group 1 units at the source as provided in such approved, complete SIP revision for the control period in 2013.

(3) If the State submits to the Administrator by April 1, 2012, and the Administrator does not approve by October 1, 2012, such complete SIP revision, the Administrator will record by October 1, 2012 in each TR SO_2 Group 1 source's compliance account the TR SO_2 Group 1 allowances allocated to the TR SO_2 Group 1 units at the source in accordance with § 97.611(a) for the control period in 2013.

(c) By July 1, 2013, the Administrator will record in each TR SO_2 Group 1 source's compliance account the TR SO_2 Group 1 allowances allocated to the TR SO_2 Group 1 units at the source, or in each appropriate Allowance Management System account the TR SO_2 Group 1 allowances auctioned to TR SO_2 Group 1 units, in accordance with § 97.611(a), or with a SIP revision approved under § 52.39(e) or (f) of this chapter, for the control period in 2014 and 2015.

(d) By July 1, 2014, the Administrator will record in each TR SO_2 Group 1 source's compliance account the TR SO_2 Group 1 allowances allocated to the TR SO_2 Group 1 units at the source, or in each appropriate Allowance Management System account the TR SO_2 Group 1 allowances auctioned to TR SO_2 Group 1 units, in accordance with § 97.611(a), or with a SIP revision approved under § 52.39(e) or (f) of this chapter, for the control period in 2016 and 2017.

(e) By July 1, 2015, the Administrator will record in each TR SO_2 Group 1 source's compliance account the TR SO_2 Group 1 allowances allocated to the TR SO_2 Group 1 units at the source, or in each appropriate Allowance Management System account the TR SO_2 Group 1 allowances auctioned to TR SO_2 Group 1 units, in accordance with § 97.611(a), or with a SIP revision approved under § 52.39(e) or (f) of this chapter, for the control period in 2018 and 2019.

(f) By July 1, 2016 and July 1 of each year thereafter, the Administrator will record in each TR SO_2 Group 1 source's compliance account the TR SO_2 Group 1 allowances allocated to the TR SO_2 Group 1 units at the source, or in each appropriate Allowance Management System account the TR SO_2 Group 1 allowances auctioned to TR SO_2 Group 1 units, in accordance with § 97.611(a), or with a SIP revision approved under § 52.39(e) and (f) of this chapter, for the control period in the fourth year after the year of the applicable recordation deadline under this paragraph.

(g) By August 1, 2012 and August 1 of each year thereafter, the Administrator will record in each TR SO_2 Group 1 source's compliance account the TR SO_2 Group 1 allowances allocated to the TR SO_2 Group 1 units at the source, or in each appropriate Allowance Management System account the TR SO_2 Group 1 allowances auctioned to TR SO_2 Group 1 units, in accordance with § 97.612(a)(2) through (8) and (12), or with a SIP revision approved under § 52.39(e) and (f) of this chapter, for the control period in the year of the applicable recordation deadline under this paragraph.

(h) By August 1, 2012 and August 1 of each year thereafter, the Administrator will record in each TR SO_2 Group 1 source's compliance account the TR SO_2 Group 1 allowances allocated to the TR SO_2 Group 1 units at the source in accordance with § 97.612(b)(2) through (8) and (12) for the control period in the year of the applicable recordation deadline under this paragraph.

(i) By February 15, 2013 and February 15 of each year thereafter, the Administrator will record in each TR SO_2 Group 1 source's compliance account the TR SO_2 Group 1 allowances allocated to the TR SO_2 Group 1 units at the source in accordance with § 97.612(a)(9) through (12), for the control period in the year before the year of the applicable recordation deadline under this paragraph.

(j) By the date on which any allocation or auction results, other than an allocation or auction results described in paragraphs (a) through (i) of this section, of TR SO_2 Group 1 allowances to a recipient is made by or are submitted to the Administrator in accordance with § 97.611 or § 97.612 or with a SIP revision approved under § 52.39(e) or (f) of this chapter, the Administrator will record such allocation or auction results in the appropriate Allowance Management System account.

(k) When recording the allocation or auction of TR SO_2 Group 1 allowances to a TR SO_2 Group 1 unit or other entity in an Allowance Management System account, the Administrator will assign each TR SO_2 Group 1 allowance a unique identification number that will include digits identifying the year of the control period for which the TR SO_2 Group 1 allowance is allocated or auctioned.

§ 97.622 Submission of TR SO_2 Group 1 allowance transfers.

(a) An authorized account representative seeking recordation of a TR SO_2 Group 1 allowance transfer shall submit the transfer to the Administrator.

(b) A TR SO_2 Group 1 allowance transfer shall be correctly submitted if:

(1) The transfer includes the following elements, in a format prescribed by the Administrator:

(i) The account numbers established by the Administrator for both the transferor and transferee accounts;

(ii) The serial number of each TR SO_2 Group 1 allowance that is in the transferor account and is to be transferred; and

(iii) The name and signature of the authorized account representative of the transferor account and the date signed; and

(2) When the Administrator attempts to record the transfer, the transferor account includes each TR SO_2 Group 1 allowance identified by serial number in the transfer.

§ 97.623 Recordation of TR SO_2 Group 1 allowance transfers.

(a) Within 5 business days (except as provided in paragraph (b) of this section) of receiving a TR SO_2 Group 1 allowance transfer that is correctly submitted under § 97.622, the Administrator will record a TR SO_2 Group 1 allowance transfer by moving each TR SO_2 Group 1 allowance from the transferor account to the transferee account as specified in the transfer.

(b) A TR SO_2 Group 1 allowance transfer to or from a compliance account that is submitted for recordation after the allowance transfer deadline for a control period and that includes any TR SO_2 Group 1 allowances allocated for

any control period before such allowance transfer deadline will not be recorded until after the Administrator completes the deductions from such compliance account under § 97.624 for the control period immediately before such allowance transfer deadline.

(c) Where a TR SO_2 Group 1 allowance transfer is not correctly submitted under § 97.622, the Administrator will not record such transfer.

(d) Within 5 business days of recordation of a TR SO_2 Group 1 allowance transfer under paragraphs (a) and (b) of the section, the Administrator will notify the authorized account representatives of both the transferor and transferee accounts.

(e) Within 10 business days of receipt of a TR SO_2 Group 1 allowance transfer that is not correctly submitted under § 97.622, the Administrator will notify the authorized account representatives of both accounts subject to the transfer of:

(1) A decision not to record the transfer, and

(2) The reasons for such non-recordation.

§ 97.624 Compliance with TR SO_2 Group 1 emissions limitation.

(a) *Availability for deduction for compliance.* TR SO_2 Group 1 allowances are available to be deducted for compliance with a source's TR SO_2 Group 1 emissions limitation for a control period in a given year only if the TR SO_2 Group 1 allowances:

(1) Were allocated for such control period or a control period in a prior year; and

(2) Are held in the source's compliance account as of the allowance transfer deadline for such control period.

(b) *Deductions for compliance.* After the recordation, in accordance with § 97.623, of TR SO_2 Group 1 allowance transfers submitted by the allowance transfer deadline for a control period in a given year, the Administrator will deduct from each source's compliance account TR SO_2 Group 1 allowances available under paragraph (a) of this section in order to determine whether the source meets the TR SO_2 Group 1 emissions limitation for such control period, as follows:

(1) Until the amount of TR SO_2 Group 1 allowances deducted equals the number of tons of total SO_2 emissions from all TR SO_2 Group 1 units at the source for such control period; or

(2) If there are insufficient TR SO_2 Group 1 allowances to complete the deductions in paragraph (b)(1) of this section, until no more TR SO_2 Group 1 allowances available under paragraph (a) of this section remain in the compliance account.

(c)(1) *Identification of TR SO_2 Group 1 allowances by serial number.* The authorized account representative for a source's compliance account may request that specific TR SO_2 Group 1 allowances, identified by serial number, in the compliance account be deducted for emissions or excess emissions for a control period in a given year in accordance with paragraph (b) or (d) of this section. In order to be complete, such request shall be submitted to the Administrator by the allowance transfer deadline for such control period and include, in a format prescribed by the Administrator, the identification of the TR SO_2 Group 1 source and the appropriate serial numbers.

(2) *First-in, first-out.* The Administrator will deduct TR SO_2 Group 1 allowances under paragraph (b) or (d) of this section from the source's compliance account in accordance with a complete request under paragraph (c)(1) of this section or, in the absence of such request or in the case of identification of an insufficient amount of TR SO_2 Group 1 allowances in such request, on a first-in, first-out accounting basis in the following order:

(i) Any TR SO_2 Group 1 allowances that were allocated to the units at the source and not transferred out of the compliance account, in the order of recordation; and then

(ii) Any TR SO_2 Group 1 allowances that were allocated to any unit and transferred to and recorded in the compliance account pursuant to this subpart, in the order of recordation.

(d) *Deductions for excess emissions.* After making the deductions for compliance under paragraph (b) of this section for a control period in a year in which the TR SO_2 Group 1 source has excess emissions, the Administrator will deduct from the source's compliance account an amount of TR SO_2 Group 1 allowances, allocated for a control period in a prior year or the control period in the year of the excess emissions or in the immediately following year, equal to two times the number of tons of the source's excess emissions.

(e) *Recordation of deductions.* The Administrator will record in the appropriate compliance account all deductions from such an account under paragraphs (b) and (d) of this section.

§ 97.625 Compliance with TR SO_2 Group 1 assurance provisions.

(a) *Availability for deduction.* TR SO_2 Group 1 allowances are available to be deducted for compliance with the TR SO_2 Group 1 assurance provisions for a control period in a given year by the owners and operators of a group of one or more TR SO_2 Group 1 sources and units in a State (and Indian country within the borders of such State) only if the TR SO_2 Group 1 allowances:

(1) Were allocated for a control period in a prior year or the control period in the given year or in the immediately following year; and

(2) Are held in the assurance account, established by the Administrator for such owners and operators of such group of TR SO_2 Group 1 sources and units in such State (and Indian country within the borders of such State) under paragraph (b)(3) of this section, as of the deadline established in paragraph (b)(4) of this section.

(b) *Deductions for compliance.* The Administrator will deduct TR SO_2 Group 1 allowances available under paragraph (a) of this section for compliance with the TR SO_2 Group 1 assurance provisions for a State for a control period in a given year in accordance with the following procedures:

(1) By June 1, 2013 and June 1 of each year thereafter, the Administrator will:

(i) Calculate, for each State (and Indian country within the borders of such State), the total SO_2 emissions from all TR SO_2 Group 1 units at TR SO_2 Group 1 sources in the State (and Indian country within the borders of such State) during the control period in the year before the year of this calculation deadline and the amount, if any, by which such total SO_2 emissions exceed the State assurance level as described in § 97.606(c)(2)(iii); and

(ii) Promulgate a notice of data availability of the results of the calculations required in paragraph (b)(1)(i) of this section, including separate calculations of the SO_2 emissions from each TR SO_2 Group 1 source.

(2) For each notice of data availability required in paragraph (b)(1)(ii) of this section and for any State (and Indian country within the borders of such State) identified in such notice as having TR SO_2 Group 1 units with total SO_2 emissions exceeding the State assurance level for a control period in a given year, as described in § 97.606(c)(2)(iii):

(i) By July 1 immediately after the promulgation of such notice, the designated representative of each TR SO_2 Group 1 source in each such State (and Indian country within the borders of such State) shall submit a statement, in a format prescribed by the Administrator, providing for each TR SO_2 Group 1 unit (if any) at the source

that operates during, but is not allocated an amount of TR SO_2 Group 1 allowances for, such control period, the unit's allowable SO_2 emission rate for such control period and, if such rate is expressed in lb per mmBtu, the unit's heat rate.

(ii) By August 1 immediately after the promulgation of such notice, the Administrator will calculate, for each such State (and Indian country within the borders of such State) and such control period and each common designated representative for such control period for a group of one or more TR SO_2 Group 1 sources and units in the State (and Indian country within the borders of such State), the common designated representative's share of the total SO_2 emissions from all TR SO_2 Group 1 units at TR SO_2 Group 1 sources in the State (and Indian country within the borders of such State), the common designated representative's assurance level, and the amount (if any) of TR SO_2 Group 1 allowances that the owners and operators of such group of sources and units must hold in accordance with the calculation formula in § 97.606(c)(2)(i) and will promulgate a notice of data availability of the results of these calculations.

(iii) The Administrator will provide an opportunity for submission of objections to the calculations referenced by the notice of data availability required in paragraph (b)(2)(ii) of this section and the calculations referenced by the relevant notice of data availability required in paragraph (b)(1)(i) of this section.

(A) Objections shall be submitted by the deadline specified in such notice and shall be limited to addressing whether the calculations referenced in the relevant notice required under paragraph (b)(1)(ii) of this section and referenced in the notice required under paragraph (b)(2)(ii) of this section are in accordance with § 97.606(c)(2)(iii), §§ 97.606(b) and 97.630 through 97.635, the definitions of ''common designated representative'', ''common designated representative's assurance level'', and ''common designated representative's share'' in § 97.602, and the calculation formula in § 97.606(c)(2)(i).

(B) The Administrator will adjust the calculations to the extent necessary to ensure that they are in accordance with the provisions referenced in paragraph (b)(2)(iii)(A) of this section. By October 1 immediately after the promulgation of such notice, the Administrator will promulgate a notice of data availability of any adjustments that the Administrator determines to be necessary and the reasons for accepting or rejecting any objections submitted in accordance with paragraph (b)(2)(iii)(A) of this section.

(3) For any State (and Indian country within the borders of such State) referenced in each notice of data availability required in paragraph (b)(2)(iii)(B) of this section as having TR SO_2 Group 1 units with total SO_2 emissions exceeding the State assurance level for a control period in a given year, the Administrator will establish one assurance account for each set of owners and operators referenced, in the notice of data availability required under paragraph (b)(2)(iii)(B) of this section, as all of the owners and operators of a group of TR SO_2 Group 1 sources and units in the State (and Indian country within the borders of such State) having a common designated representative for such control period and as being required to hold TR SO_2 Group 1 allowances.

(4)(i) As of midnight of November 1 immediately after the promulgation of each notice of data availability required in paragraph (b)(2)(iii)(B) of this section, the owners and operators described in paragraph (b)(3) of this section shall hold in the assurance account established for them and for the appropriate TR SO_2 Group 1 sources, TR SO_2 Group 1 units, and State (and Indian country within the borders of such State) under paragraph (b)(3) of this section a total amount of TR SO_2 Group 1 allowances, available for deduction under paragraph (a) of this section, equal to the amount such owners and operators are required to hold with regard to such sources, units and State (and Indian country within the borders of such State) as calculated by the Administrator and referenced in such notice.

(ii) Notwithstanding the allowance-holding deadline specified in paragraph (b)(4)(i) of this section, if November 1 is not a business day, then such allowance-holding deadline shall be midnight of the first business day thereafter.

(5) After November 1 (or the date described in paragraph (b)(4)(ii) of this section) immediately after the promulgation of each notice of data availability required in paragraph (b)(2)(iii)(B) of this section and after the recordation, in accordance with § 97.623, of TR SO_2 Group 1 allowance transfers submitted by midnight of such date, the Administrator will determine whether the owners and operators described in paragraph (b)(3) of this section hold, in the assurance account for the appropriate TR SO_2 Group 1 sources, TR SO_2 Group 1 units, and State (and Indian country within the borders of such State) established under paragraph (b)(3) of this section, the amount of TR SO_2 Group 1 allowances available under paragraph (a) of this section that the owners and operators are required to hold with regard to such sources, units, and State (and Indian country within the borders of such State) as calculated by the Administrator and referenced in the notice required in paragraph (b)(2)(iii)(B) of this section.

(6) Notwithstanding any other provision of this subpart and any revision, made by or submitted to the Administrator after the promulgation of the notice of data availability required in paragraph (b)(2)(iii)(B) of this section for a control period in a given year, of any data used in making the calculations referenced in such notice, the amounts of TR SO_2 Group 1 allowances that the owners and operators are required to hold in accordance with § 97.606(c)(2)(i) for such control period shall continue to be such amounts as calculated by the Administrator and referenced in such notice required in paragraph (b)(2)(iii)(B) of this section, except as follows:

(i) If any such data are revised by the Administrator as a result of a decision in or settlement of litigation concerning such data on appeal under part 78 of this chapter of such notice, or on appeal under section 307 of the Clean Air Act of a decision rendered under part 78 of this chapter on appeal of such notice, then the Administrator will use the data as so revised to recalculate the amounts of TR SO_2 Group 1 allowances that owners and operators are required to hold in accordance with the calculation formula in § 97.606(c)(2)(i) for such control period with regard to the TR SO_2 Group 1 sources, TR SO_2 Group 1 units, and State (and Indian country within the borders of such State) involved, provided that such litigation under part 78 of this chapter, or the proceeding under part 78 of this chapter that resulted in the decision appealed in such litigation under section 307 of the Clean Air Act, was initiated no later than 30 days after promulgation of such notice required in paragraph (b)(2)(iii)(B) of this section.

(ii) If any such data are revised by the owners and operators of a TR SO_2 Group 1 source and TR SO_2 Group 1 unit whose designated representative submitted such data under paragraph (b)(2)(i) of this section, as a result of a decision in or settlement of litigation concerning such submission, then the Administrator will use the data as so revised to recalculate the amounts of TR SO_2 Group 1 allowances that owners and operators are required to hold in

accordance with the calculation formula in § 97.606(c)(2)(i) for such control period with regard to the TR SO_2 Group 1 sources, TR SO_2 Group 1 units, and State (and Indian country within the borders of such State) involved, provided that such litigation was initiated no later than 30 days after promulgation of such notice required in paragraph (b)(2)(iii)(B) of this section.

(iii) If the revised data are used to recalculate, in accordance with paragraphs (b)(6)(i) and (ii) of this section, the amount of TR SO_2 Group 1 allowances that the owners and operators are required to hold for such control period with regard to the TR SO_2 Group 1 sources, TR SO_2 Group 1 units, and State (and Indian country within the borders of such State) involved—

(A) Where the amount of TR SO_2 Group 1 allowances that the owners and operators are required to hold increases as a result of the use of all such revised data, the Administrator will establish a new, reasonable deadline on which the owners and operators shall hold the additional amount of TR SO_2 Group 1 allowances in the assurance account established by the Administrator for the appropriate TR SO_2 Group 1 sources, TR SO_2 Group 1 units, and State (and Indian country within the borders of such State) under paragraph (b)(3) of this section. The owners' and operators' failure to hold such additional amount, as required, before the new deadline shall not be a violation of the Clean Air Act. The owners' and operators' failure to hold such additional amount, as required, as of the new deadline shall be a violation of the Clean Air Act. Each TR SO_2 Group 1 allowance that the owners and operators fail to hold as required as of the new deadline, and each day in such control period, shall be a separate violation of the Clean Air Act.

(B) For the owners and operators for which the amount of TR SO_2 Group 1 allowances required to be held decreases as a result of the use of all such revised data, the Administrator will record, in all accounts from which TR SO_2 Group 1 allowances were transferred by such owners and operators for such control period to the assurance account established by the Administrator for the appropriate TR SO_2 Group 1 sources, TR SO_2 Group 1 units, and State (and Indian country within the borders of such State) under paragraph (b)(3) of this section, a total amount of the TR SO_2 Group 1 allowances held in such assurance account equal to the amount of the decrease. If TR SO_2 Group 1 allowances were transferred to such assurance account from more than one account, the amount of TR SO_2 Group 1 allowances recorded in each such transferor account will be in proportion to the percentage of the total amount of TR SO_2 Group 1 allowances transferred to such assurance account for such control period from such transferor account.

(C) Each TR SO_2 Group 1 allowance held under paragraph (b)(6)(iii)(A) of this section as a result of recalculation of requirements under the TR SO_2 Group 1 assurance provisions for such control period must be a TR SO_2 Group 1 allowance allocated for a control period in a year before or the year immediately following, or in the same year as, the year of such control period.

§ 97.626 Banking.

(a) A TR SO_2 Group 1 allowance may be banked for future use or transfer in a compliance account or a general account in accordance with paragraph (b) of this section.

(b) Any TR SO_2 Group 1 allowance that is held in a compliance account or a general account will remain in such account unless and until the TR SO_2 Group 1 allowance is deducted or transferred under § 97.611(c), § 97.623, § 97.624, § 97.625, § 97.627, or § 97.628.

§ 97.627 Account error.

The Administrator may, at his or her sole discretion and on his or her own motion, correct any error in any Allowance Management System account. Within 10 business days of making such correction, the Administrator will notify the authorized account representative for the account.

§ 97.628 Administrator's action on submissions.

(a) The Administrator may review and conduct independent audits concerning any submission under the TR SO_2 Group 1 Trading Program and make appropriate adjustments of the information in the submission.

(b) The Administrator may deduct TR SO_2 Group 1 allowances from or transfer TR SO_2 Group 1 allowances to a compliance account or an assurance account, based on the information in a submission, as adjusted under paragraph (a)(1) of this section, and record such deductions and transfers.

§ 97.629 [Reserved]

§ 97.630 General monitoring, recordkeeping, and reporting requirements.

The owners and operators, and to the extent applicable, the designated representative, of a TR SO_2 Group 1 unit, shall comply with the monitoring, recordkeeping, and reporting requirements as provided in this subpart and subparts F and G of part 75 of this chapter. For purposes of applying such requirements, the definitions in § 97.602 and in § 72.2 of this chapter shall apply, the terms ''affected unit,'' ''designated representative,'' and ''continuous emission monitoring system'' (or ''CEMS'') in part 75 of this chapter shall be deemed to refer to the terms ''TR SO_2 Group 1 unit,'' ''designated representative,'' and ''continuous emission monitoring system'' (or ''CEMS'') respectively as defined in § 97.602, and the term ''newly affected unit'' shall be deemed to mean ''newly affected TR SO_2 Group 1 unit''. The owner or operator of a unit that is not a TR SO_2 Group 1 unit but that is monitored under § 75.16(b)(2) of this chapter shall comply with the same monitoring, recordkeeping, and reporting requirements as a TR SO_2 Group 1 unit.

(a) *Requirements for installation, certification, and data accounting.* The owner or operator of each TR SO_2 Group 1 unit shall:

(1) Install all monitoring systems required under this subpart for monitoring SO_2 mass emissions and individual unit heat input (including all systems required to monitor SO_2 concentration, stack gas moisture content, stack gas flow rate, CO_2 or O_2 concentration, and fuel flow rate, as applicable, in accordance with §§ 75.11 and 75.16 of this chapter);

(2) Successfully complete all certification tests required under § 97.631 and meet all other requirements of this subpart and part 75 of this chapter applicable to the monitoring systems under paragraph (a)(1) of this section; and

(3) Record, report, and quality-assure the data from the monitoring systems under paragraph (a)(1) of this section.

(b) *Compliance deadlines.* Except as provided in paragraph (e) of this section, the owner or operator shall meet the monitoring system certification and other requirements of paragraphs (a)(1) and (2) of this section on or before the following dates and shall record, report, and quality-assure the data from the monitoring systems under paragraph (a)(1) of this section on and after the following dates.

(1) For the owner or operator of a TR SO_2 Group 1 unit that commences commercial operation before July 1, 2011, January 1, 2012.

(2) For the owner or operator of a TR SO_2 Group 1 unit that commences commercial operation on or after July 1, 2011, by the later of the following:

(i) January 1, 2012; or

(ii) 180 calendar days after the date on which the unit commences commercial operation.

(3) The owner or operator of a TR SO_2 Group 1 unit for which construction of a new stack or flue or installation of add-on SO_2 emission controls is completed after the applicable deadline under paragraph (b)(1) or (2) of this section shall meet the requirements of §§ 75.4(e)(1) through (e)(4) of this chapter, except that:

(i) Such requirements shall apply to the monitoring systems required under § 97.630 through § 97.635, rather than the monitoring systems required under part 75 of this chapter;

(ii) SO_2 concentration, stack gas moisture content, stack gas volumetric flow rate, and O_2 or CO_2 concentration data shall be determined and reported, rather than the data listed in § 75.4(e)(2) of this chapter; and

(iii) Any petition for another procedure under § 75.4(e)(2) of this chapter shall be submitted under § 97.635, rather than § 75.66.

(c) *Reporting data.* The owner or operator of a TR SO_2 Group 1 unit that does not meet the applicable compliance date set forth in paragraph (b) of this section for any monitoring system under paragraph (a)(1) of this section shall, for each such monitoring system, determine, record, and report maximum potential (or, as appropriate, minimum potential) values for SO_2 concentration, stack gas flow rate, stack gas moisture content, fuel flow rate, and any other parameters required to determine SO_2 mass emissions and heat input in accordance with § 75.31(b)(2) or (c)(3) of this chapter or section 2.4 of appendix D to part 75 of this chapter, as applicable.

(d) *Prohibitions.* (1) No owner or operator of a TR SO_2 Group 1 unit shall use any alternative monitoring system, alternative reference method, or any other alternative to any requirement of this subpart without having obtained prior written approval in accordance with § 97.635.

(2) No owner or operator of a TR SO_2 Group 1 unit shall operate the unit so as to discharge, or allow to be discharged, SO_2 to the atmosphere without accounting for all such SO_2 in accordance with the applicable provisions of this subpart and part 75 of this chapter.

(3) No owner or operator of a TR SO_2 Group 1 unit shall disrupt the continuous emission monitoring system, any portion thereof, or any other approved emission monitoring method, and thereby avoid monitoring and recording SO_2 mass discharged into the atmosphere or heat input, except for periods of recertification or periods when calibration, quality assurance testing, or maintenance is performed in accordance with the applicable provisions of this subpart and part 75 of this chapter.

(4) No owner or operator of a TR SO_2 Group 1 unit shall retire or permanently discontinue use of the continuous emission monitoring system, any component thereof, or any other approved monitoring system under this subpart, except under any one of the following circumstances:

(i) During the period that the unit is covered by an exemption under § 97.605 that is in effect;

(ii) The owner or operator is monitoring emissions from the unit with another certified monitoring system approved, in accordance with the applicable provisions of this subpart and part 75 of this chapter, by the Administrator for use at that unit that provides emission data for the same pollutant or parameter as the retired or discontinued monitoring system; or

(iii) The designated representative submits notification of the date of certification testing of a replacement monitoring system for the retired or discontinued monitoring system in accordance with § 97.631(d)(3)(i).

(e) *Long-term cold storage.* The owner or operator of a TR SO_2 Group 1 unit is subject to the applicable provisions of § 75.4(d) of this chapter concerning units in long-term cold storage.

§ 97.631 Initial monitoring system certification and recertification procedures.

(a) The owner or operator of a TR SO_2 Group 1 unit shall be exempt from the initial certification requirements of this section for a monitoring system under § 97.630(a)(1) if the following conditions are met:

(1) The monitoring system has been previously certified in accordance with part 75 of this chapter; and

(2) The applicable quality-assurance and quality-control requirements of § 75.21 of this chapter and appendices B and D to part 75 of this chapter are fully met for the certified monitoring system described in paragraph (a)(1) of this section.

(b) The recertification provisions of this section shall apply to a monitoring system under § 97.630(a)(1) that is exempt from initial certification requirements under paragraph (a) of this section.

(c) [Reserved]

(d) Except as provided in paragraph (a) of this section, the owner or operator of a TR SO_2 Group 1 unit shall comply with the following initial certification and recertification procedures, for a continuous monitoring system (*i.e.,* a continuous emission monitoring system and an excepted monitoring system under appendix D to part 75 of this chapter) under § 97.630(a)(1). The owner or operator of a unit that qualifies to use the low mass emissions excepted monitoring methodology under § 75.19 of this chapter or that qualifies to use an alternative monitoring system under subpart E of part 75 of this chapter shall comply with the procedures in paragraph (e) or (f) of this section respectively.

(1) Requirements for initial certification. The owner or operator shall ensure that each continuous monitoring system under § 97.630(a)(1) (including the automated data acquisition and handling system) successfully completes all of the initial certification testing required under § 75.20 of this chapter by the applicable deadline in § 97.630(b). In addition, whenever the owner or operator installs a monitoring system to meet the requirements of this subpart in a location where no such monitoring system was previously installed, initial certification in accordance with § 75.20 of this chapter is required.

(2) Requirements for recertification. Whenever the owner or operator makes a replacement, modification, or change in any certified continuous emission monitoring system under § 97.630(a)(1) that may significantly affect the ability of the system to accurately measure or record SO_2 mass emissions or heat input rate or to meet the quality-assurance and quality-control requirements of § 75.21 of this chapter or appendix B to part 75 of this chapter, the owner or operator shall recertify the monitoring system in accordance with § 75.20(b) of this chapter. Furthermore, whenever the owner or operator makes a replacement, modification, or change to the flue gas handling system or the unit's operation that may significantly change the stack flow or concentration profile, the owner or operator shall recertify each continuous emission monitoring system whose accuracy is potentially affected by the change, in accordance with § 75.20(b) of this chapter. Examples of changes to a continuous emission monitoring system that require recertification include: Replacement of the analyzer, complete replacement of an existing continuous emission monitoring system, or change in location or orientation of the sampling probe or site. Any fuel flowmeter system under § 97.630(a)(1) is subject to the recertification requirements in § 75.20(g)(6) of this chapter.

(3) Approval process for initial certification and recertification. For initial certification of a continuous monitoring system under § 97.630(a)(1), paragraphs (d)(3)(i) through (v) of this

section apply. For recertifications of such monitoring systems, paragraphs (d)(3)(i) through (iv) of this section and the procedures in §§ 75.20(b)(5) and (g)(7) of this chapter (in lieu of the procedures in paragraph (d)(3)(v) of this section) apply, provided that in applying paragraphs (d)(3)(i) through (iv) of this section, the words ''certification'' and ''initial certification'' are replaced by the word ''recertification'' and the word ''certified'' is replaced by the word ''recertified''.

(i) Notification of certification. The designated representative shall submit to the appropriate EPA Regional Office and the Administrator written notice of the dates of certification testing, in accordance with § 97.633.

(ii) Certification application. The designated representative shall submit to the Administrator a certification application for each monitoring system. A complete certification application shall include the information specified in § 75.63 of this chapter.

(iii) Provisional certification date. The provisional certification date for a monitoring system shall be determined in accordance with § 75.20(a)(3) of this chapter. A provisionally certified monitoring system may be used under the TR SO_2 Group 1 Trading Program for a period not to exceed 120 days after receipt by the Administrator of the complete certification application for the monitoring system under paragraph (d)(3)(ii) of this section. Data measured and recorded by the provisionally certified monitoring system, in accordance with the requirements of part 75 of this chapter, will be considered valid quality-assured data (retroactive to the date and time of provisional certification), provided that the Administrator does not invalidate the provisional certification by issuing a notice of disapproval within 120 days of the date of receipt of the complete certification application by the Administrator.

(iv) Certification application approval process. The Administrator will issue a written notice of approval or disapproval of the certification application to the owner or operator within 120 days of receipt of the complete certification application under paragraph (d)(3)(ii) of this section. In the event the Administrator does not issue such a notice within such 120-day period, each monitoring system that meets the applicable performance requirements of part 75 of this chapter and is included in the certification application will be deemed certified for use under the TR SO_2 Group 1 Trading Program.

(A) Approval notice. If the certification application is complete and shows that each monitoring system meets the applicable performance requirements of part 75 of this chapter, then the Administrator will issue a written notice of approval of the certification application within 120 days of receipt.

(B) Incomplete application notice. If the certification application is not complete, then the Administrator will issue a written notice of incompleteness that sets a reasonable date by which the designated representative must submit the additional information required to complete the certification application. If the designated representative does not comply with the notice of incompleteness by the specified date, then the Administrator may issue a notice of disapproval under paragraph (d)(3)(iv)(C) of this section.

(C) Disapproval notice. If the certification application shows that any monitoring system does not meet the performance requirements of part 75 of this chapter or if the certification application is incomplete and the requirement for disapproval under paragraph (d)(3)(iv)(B) of this section is met, then the Administrator will issue a written notice of disapproval of the certification application. Upon issuance of such notice of disapproval, the provisional certification is invalidated by the Administrator and the data measured and recorded by each uncertified monitoring system shall not be considered valid quality-assured data beginning with the date and hour of provisional certification (as defined under § 75.20(a)(3) of this chapter).

(D) Audit decertification. The Administrator may issue a notice of disapproval of the certification status of a monitor in accordance with § 97.632(b).

(v) Procedures for loss of certification. If the Administrator issues a notice of disapproval of a certification application under paragraph (d)(3)(iv)(C) of this section or a notice of disapproval of certification status under paragraph (d)(3)(iv)(D) of this section, then:

(A) The owner or operator shall substitute the following values, for each disapproved monitoring system, for each hour of unit operation during the period of invalid data specified under § 75.20(a)(4)(iii), § 75.20(g)(7), or § 75.21(e) of this chapter and continuing until the applicable date and hour specified under § 75.20(a)(5)(i) or (g)(7) of this chapter:

(1) For a disapproved SO_2 pollutant concentration monitor and disapproved flow monitor, respectively, the maximum potential concentration of SO_2 and the maximum potential flow rate, as defined in sections 2.1.1.1 and 2.1.4.1 of appendix A to part 75 of this chapter.

(2) For a disapproved moisture monitoring system and disapproved diluent gas monitoring system, respectively, the minimum potential moisture percentage and either the maximum potential CO_2 concentration or the minimum potential O_2 concentration (as applicable), as defined in sections 2.1.5, 2.1.3.1, and 2.1.3.2 of appendix A to part 75 of this chapter.

(3) For a disapproved fuel flowmeter system, the maximum potential fuel flow rate, as defined in section 2.4.2.1 of appendix D to part 75 of this chapter.

(B) The designated representative shall submit a notification of certification retest dates and a new certification application in accordance with paragraphs (d)(3)(i) and (ii) of this section.

(C) The owner or operator shall repeat all certification tests or other requirements that were failed by the monitoring system, as indicated in the Administrator's notice of disapproval, no later than 30 unit operating days after the date of issuance of the notice of disapproval.

(e) The owner or operator of a unit qualified to use the low mass emissions (LME) excepted methodology under § 75.19 of this chapter shall meet the applicable certification and recertification requirements in §§ 75.19(a)(2) and 75.20(h) of this chapter. If the owner or operator of such a unit elects to certify a fuel flowmeter system for heat input determination, the owner or operator shall also meet the certification and recertification requirements in § 75.20(g) of this chapter.

(f) The designated representative of each unit for which the owner or operator intends to use an alternative monitoring system approved by the Administrator under subpart E of part 75 of this chapter shall comply with the applicable notification and application procedures of § 75.20(f) of this chapter.

§ 97.632 Monitoring system out-of-control periods.

(a) *General provisions.* Whenever any monitoring system fails to meet the quality-assurance and quality-control requirements or data validation requirements of part 75 of this chapter, data shall be substituted using the applicable missing data procedures in subpart D or appendix D to part 75 of this chapter.

(b) *Audit decertification.* Whenever both an audit of a monitoring system

and a review of the initial certification or recertification application reveal that any monitoring system should not have been certified or recertified because it did not meet a particular performance specification or other requirement under § 97.631 or the applicable provisions of part 75 of this chapter, both at the time of the initial certification or recertification application submission and at the time of the audit, the Administrator will issue a notice of disapproval of the certification status of such monitoring system. For the purposes of this paragraph, an audit shall be either a field audit or an audit of any information submitted to the Administrator or any State or permitting authority. By issuing the notice of disapproval, the Administrator revokes prospectively the certification status of the monitoring system. The data measured and recorded by the monitoring system shall not be considered valid quality-assured data from the date of issuance of the notification of the revoked certification status until the date and time that the owner or operator completes subsequently approved initial certification or recertification tests for the monitoring system. The owner or operator shall follow the applicable initial certification or recertification procedures in § 97.631 for each disapproved monitoring system.

§ 97.633 Notifications concerning monitoring.

The designated representative of a TR SO_2 Group 1 unit shall submit written notice to the Administrator in accordance with § 75.61 of this chapter.

§ 97.634 Recordkeeping and reporting.

(a) *General provisions.* The designated representative shall comply with all recordkeeping and reporting requirements in paragraphs (b) through (e) of this section, the applicable recordkeeping and reporting requirements in subparts F and G of part 75 of this chapter, and the requirements of § 97.614(a).

(b) *Monitoring plans.* The owner or operator of a TR SO_2 Group 1 unit shall comply with requirements of § 75.62 of this chapter.

(c) *Certification applications.* The designated representative shall submit an application to the Administrator within 45 days after completing all initial certification or recertification tests required under § 97.631, including the information required under § 75.63 of this chapter.

(d) *Quarterly reports.* The designated representative shall submit quarterly reports, as follows:

(1) The designated representative shall report the SO_2 mass emissions data and heat input data for the TR SO_2 Group 1 unit, in an electronic quarterly report in a format prescribed by the Administrator, for each calendar quarter beginning with:

(i) For a unit that commences commercial operation before July 1, 2011, the calendar quarter covering January 1, 2012 through March 31, 2012; or

(ii) For a unit that commences commercial operation on or after July 1, 2011, the calendar quarter corresponding to the earlier of the date of provisional certification or the applicable deadline for initial certification under § 97.630(b), unless that quarter is the third or fourth quarter of 2011, in which case reporting shall commence in the quarter covering January 1, 2012 through March 31, 2012.

(2) The designated representative shall submit each quarterly report to the Administrator within 30 days after the end of the calendar quarter covered by the report. Quarterly reports shall be submitted in the manner specified in § 75.64 of this chapter.

(3) For TR SO_2 Group 1 units that are also subject to the Acid Rain Program, TR NO_X Annual Trading Program, or TR NO_X Ozone Season Trading Program, quarterly reports shall include the applicable data and information required by subparts F through H of part 75 of this chapter as applicable, in addition to the SO_2 mass emission data, heat input data, and other information required by this subpart.

(4) The Administrator may review and conduct independent audits of any quarterly report in order to determine whether the quarterly report meets the requirements of this subpart and part 75 of this chapter, including the requirement to use substitute data.

(i) The Administrator will notify the designated representative of any determination that the quarterly report fails to meet any such requirements and specify in such notification any corrections that the Administrator believes are necessary to make through resubmission of the quarterly report and a reasonable time period within which the designated representative must respond. Upon request by the designated representative, the Administrator may specify reasonable extensions of such time period. Within the time period (including any such extensions) specified by the Administrator, the designated representative shall resubmit the quarterly report with the corrections specified by the Administrator, except to the extent the designated representative provides information demonstrating that a specified correction is not necessary because the quarterly report already meets the requirements of this subpart and part 75 of this chapter that are relevant to the specified correction.

(ii) Any resubmission of a quarterly report shall meet the requirements applicable to the submission of a quarterly report under this subpart and part 75 of this chapter, except for the deadline set forth in paragraph (d)(2) of this section.

(e) *Compliance certification.* The designated representative shall submit to the Administrator a compliance certification (in a format prescribed by the Administrator) in support of each quarterly report based on reasonable inquiry of those persons with primary responsibility for ensuring that all of the unit's emissions are correctly and fully monitored. The certification shall state that:

(1) The monitoring data submitted were recorded in accordance with the applicable requirements of this subpart and part 75 of this chapter, including the quality assurance procedures and specifications; and

(2) For a unit with add-on SO_2 emission controls and for all hours where SO_2 data are substituted in accordance with § 75.34(a)(1) of this chapter, the add-on emission controls were operating within the range of parameters listed in the quality assurance/quality control program under appendix B to part 75 of this chapter and the substitute data values do not systematically underestimate SO_2 emissions.

§ 97.635 Petitions for alternatives to monitoring, recordkeeping, or reporting requirements.

(a) The designated representative of a TR SO_2 Group 1 unit may submit a petition under § 75.66 of this chapter to the Administrator, requesting approval to apply an alternative to any requirement of §§ 97.630 through 97.634.

(b) A petition submitted under paragraph (a) of this section shall include sufficient information for the evaluation of the petition, including, at a minimum, the following information:

(i) Identification of each unit and source covered by the petition;

(ii) A detailed explanation of why the proposed alternative is being suggested in lieu of the requirement;

(iii) A description and diagram of any equipment and procedures used in the proposed alternative;

(iv) A demonstration that the proposed alternative is consistent with

the purposes of the requirement for which the alternative is proposed and with the purposes of this subpart and part 75 of this chapter and that any adverse effect of approving the alternative will be *de minimis;* and

(v) Any other relevant information that the Administrator may require.

(c) Use of an alternative to any requirement referenced in paragraph (a) of this section is in accordance with this subpart only to the extent that the petition is approved in writing by the Administrator and that such use is in accordance with such approval.

77. Part 97 is amended by adding subpart DDDDD to read as follows:

Subpart DDDDD—TR SO_2 Group 2 Trading Program

Sec.

97.701 Purpose.
97.702 Definitions.
97.703 Measurements, abbreviations, and acronyms.
97.704 Applicability.
97.705 Retired unit exemption.
97.706 Standard requirements.
97.707 Computation of time.
97.708 Administrative appeal procedures.
97.709 [Reserved]
97.710 State SO_2 Group 2 trading budgets, new unit set-asides, Indian country new unit set-asides and variability limits.
97.711 Timing requirements for TR SO_2 Group 2 allowance allocations.
97.712 TR SO_2 Group 2 allowance allocations to new units.
97.713 Authorization of designated representative and alternate designated representative.
97.714 Responsibilities of designated representative and alternate designated representative.
97.715 Changing designated representative and alternate designated representative; changes in owners and operators.
97.716 Certificate of representation.
97.717 Objections concerning designated representative and alternate designated representative.
97.718 Delegation by designated representative and alternate designated representative.
97.719 [Reserved]
97.720 Establishment of compliance accounts and general accounts.
97.721 Recordation of TR SO_2 Group 2 allowance allocations.
97.722 Submission of TR SO_2 Group 2 allowance transfers.
97.723 Recordation of TR SO_2 Group 2 allowance transfers.
97.724 Compliance with TR SO_2 Group 2 emissions limitation.
97.725 Compliance with TR SO_2 Group 2 assurance provisions.
97.726 Banking.
97.727 Account error.
97.728 Administrator's action on submissions.
97.729 [Reserved]
97.730 General monitoring, recordkeeping, and reporting requirements.
97.731 Initial monitoring system certification and recertification procedures.
97.732 Monitoring system out-of-control periods.
97.733 Notifications concerning monitoring.
97.734 Recordkeeping and reporting.
97.735 Petitions for alternatives to monitoring, recordkeeping, or reporting requirements.

Subpart DDDDD—TR SO_2 Group 2 Trading Program

§ 97.701 Purpose.

This subpart sets forth the general, designated representative, allowance, and monitoring provisions for the Transport Rule (TR) SO_2 Group 2 Trading Program, under section 110 of the Clean Air Act and § 52.39 of this chapter, as a means of mitigating interstate transport of fine particulates and sulfur dioxide.

§ 97.702 Definitions.

The terms used in this subpart shall have the meanings set forth in this section as follows:

Acid Rain Program means a multi-state SO_2 and NO_X air pollution control and emission reduction program established by the Administrator under title IV of the Clean Air Act and parts 72 through 78 of this chapter.

Administrator means the Administrator of the United States Environmental Protection Agency or the Director of the Clean Air Markets Division (or its successor determined by the Administrator) of the United States Environmental Protection Agency, the Administrator's duly authorized representative under this subpart.

Allocate or *allocation* means, with regard to TR SO_2 Group 2 allowances, the determination by the Administrator, State, or permitting authority, in accordance with this subpart and any SIP revision submitted by the State and approved by the Administrator under § 52.39(g), (h), or (i) of this chapter, of the amount of such TR SO_2 Group 2 allowances to be initially credited, at no cost to the recipient, to:

(1) A TR SO_2 Group 2 unit;

(2) A new unit set-aside;

(3) An Indian country new unit set-aside; or

(4) An entity not listed in paragraphs (1) through (3) of this definition;

(5) Provided that, if the Administrator, State, or permitting authority initially credits, to a TR SO_2 Group 2 unit qualifying for an initial credit, a credit in the amount of zero TR SO_2 Group 2 allowances, the TR SO_2 Group 2 unit will be treated as being allocated an amount (*i.e.*, zero) of TR SO_2 Group 2 allowances.

Allowable SO_2 emission rate means, for a unit, the most stringent State or federal SO_2 emission rate limit (in lb/MWhr or, if in lb/mmBtu, converted to lb/MWhr by multiplying it by the unit's heat rate in mmBtu/MWhr) that is applicable to the unit and covers the longest averaging period not exceeding one year.

Allowance Management System means the system by which the Administrator records allocations, deductions, and transfers of TR SO_2 Group 2 allowances under the TR SO_2 Group 2 Trading Program. Such allowances are allocated, recorded, held, deducted, or transferred only as whole allowances.

Allowance Management System account means an account in the Allowance Management System established by the Administrator for purposes of recording the allocation, holding, transfer, or deduction of TR SO_2 Group 2 allowances.

Allowance transfer deadline means, for a control period in a given year, midnight of March 1 (if it is a business day), or midnight of the first business day thereafter (if March 1 is not a business day), immediately after such control period and is the deadline by which a TR SO_2 Group 2 allowance transfer must be submitted for recordation in a TR SO_2 Group 2 source's compliance account in order to be available for use in complying with the source's TR SO_2 Group 2 emissions limitation for such control period in accordance with §§ 97.706 and 97.724.

Alternate designated representative means, for a TR SO_2 Group 2 source and each TR SO_2 Group 2 unit at the source, the natural person who is authorized by the owners and operators of the source and all such units at the source, in accordance with this subpart, to act on behalf of the designated representative in matters pertaining to the TR SO_2 Group 2 Trading Program. If the TR SO_2 Group 2 source is also subject to the Acid Rain Program, TR NO_X Annual Trading Program, or TR NO_X Ozone Season Trading Program, then this natural person shall be the same natural person as the alternate designated representative, as defined in the respective program.

Assurance account means an Allowance Management System account, established by the Administrator under § 97.725(b)(3) for certain owners and operators of a group of one or more TR SO_2 Group 2 sources and units in a given State (and Indian country within the borders of such State), in which are held TR SO_2 Group 2 allowances available for use for a control period in a given year in

complying with the TR SO_2 Group 2 assurance provisions in accordance with §§ 97.706 and 97.725.

Authorized account representative means, for a general account, the natural person who is authorized, in accordance with this subpart, to transfer and otherwise dispose of TR SO_2 Group 2 allowances held in the general account and, for a TR SO_2 Group 2 source's compliance account, the designated representative of the source.

Automated data acquisition and handling system or *DAHS* means the component of the continuous emission monitoring system, or other emissions monitoring system approved for use under this subpart, designed to interpret and convert individual output signals from pollutant concentration monitors, flow monitors, diluent gas monitors, and other component parts of the monitoring system to produce a continuous record of the measured parameters in the measurement units required by this subpart.

Biomass means—

(1) Any organic material grown for the purpose of being converted to energy;

(2) Any organic byproduct of agriculture that can be converted into energy; or

(3) Any material that can be converted into energy and is nonmerchantable for other purposes, that is segregated from other material that is nonmerchantable for other purposes, and that is;

(i) A forest-related organic resource, including mill residues, precommercial thinnings, slash, brush, or byproduct from conversion of trees to merchantable material; or

(ii) A wood material, including pallets, crates, dunnage, manufacturing and construction materials (other than pressure-treated, chemically-treated, or painted wood products), and landscape or right-of-way tree trimmings.

Boiler means an enclosed fossil- or other-fuel-fired combustion device used to produce heat and to transfer heat to recirculating water, steam, or other medium.

Bottoming-cycle unit means a unit in which the energy input to the unit is first used to produce useful thermal energy, where at least some of the reject heat from the useful thermal energy application or process is then used for electricity production.

Business day means a day that does not fall on a weekend or a federal holiday.

Certifying official means a natural person who is:

(1) For a corporation, a president, secretary, treasurer, or vice-president of the corporation in charge of a principal business function or any other person who performs similar policy- or decision-making functions for the corporation;

(2) For a partnership or sole proprietorship, a general partner or the proprietor respectively; or

(3) For a local government entity or State, federal, or other public agency, a principal executive officer or ranking elected official.

Clean Air Act means the Clean Air Act, 42 U.S.C. 7401, *et seq.*

Coal means ''coal'' as defined in § 72.2 of this chapter.

Coal-derived fuel means any fuel (whether in a solid, liquid, or gaseous state) produced by the mechanical, thermal, or chemical processing of coal.

Cogeneration system means an integrated group, at a source, of equipment (including a boiler, or combustion turbine, and a steam turbine generator) designed to produce useful thermal energy for industrial, commercial, heating, or cooling purposes and electricity through the sequential use of energy.

Cogeneration unit means a stationary, fossil-fuel-fired boiler or stationary, fossil-fuel-fired combustion turbine that is a topping-cycle unit or a bottoming-cycle unit:

(1) Operating as part of a cogeneration system; and

(2) Producing on an annual average basis—

(i) For a topping-cycle unit,

(A) Useful thermal energy not less than 5 percent of total energy output; and

(B) Useful power that, when added to one-half of useful thermal energy produced, is not less than 42.5 percent of total energy input, if useful thermal energy produced is 15 percent or more of total energy output, or not less than 45 percent of total energy input, if useful thermal energy produced is less than 15 percent of total energy output.

(ii) For a bottoming-cycle unit, useful power not less than 45 percent of total energy input;

(3) Provided that the requirements in paragraph (2) of this definition shall not apply to a calendar year referenced in paragraph (2) of this definition during which the unit did not operate at all;

(4) Provided that the total energy input under paragraphs (2)(i)(B) and (2)(ii) of this definition shall equal the unit's total energy input from all fuel, except biomass if the unit is a boiler; and

(5) Provided that, if, throughout its operation during the 12-month period or a calendar year referenced in paragraph (2) of this definition, a unit is operated as part of a cogeneration system and the cogeneration system meets on a system-wide basis the requirement in paragraph (2)(i)(B) or (2)(ii) of this definition, the unit shall be deemed to meet such requirement during that 12-month period or calendar year.

Combustion turbine means an enclosed device comprising:

(1) If the device is simple cycle, a compressor, a combustor, and a turbine and in which the flue gas resulting from the combustion of fuel in the combustor passes through the turbine, rotating the turbine; and

(2) If the device is combined cycle, the equipment described in paragraph (1) of this definition and any associated duct burner, heat recovery steam generator, and steam turbine.

Commence commercial operation means, with regard to a unit:

(1) To have begun to produce steam, gas, or other heated medium used to generate electricity for sale or use, including test generation, except as provided in § 97.705.

(i) For a unit that is a TR SO_2 Group 2 unit under § 97.704 on the later of January 1, 2005 or the date the unit commences commercial operation as defined in the introductory text of paragraph (1) of this definition and that subsequently undergoes a physical change or is moved to a new location or source, such date shall remain the date of commencement of commercial operation of the unit, which shall continue to be treated as the same unit.

(ii) For a unit that is a TR SO_2 Group 2 unit under § 97.704 on the later of January 1, 2005 or the date the unit commences commercial operation as defined in the introductory text of paragraph (1) of this definition and that is subsequently replaced by a unit at the same or a different source, such date shall remain the replaced unit's date of commencement of commercial operation, and the replacement unit shall be treated as a separate unit with a separate date for commencement of commercial operation as defined in paragraph (1) or (2) of this definition as appropriate.

(2) Notwithstanding paragraph (1) of this definition and except as provided in § 97.705, for a unit that is not a TR SO_2 Group 2 unit under § 97.704 on the later of January 1, 2005 or the date the unit commences commercial operation as defined in introductory text of paragraph (1) of this definition, the unit's date for commencement of commercial operation shall be the date on which the unit becomes a TR SO_2 Group 2 unit under § 97.704.

(i) For a unit with a date for commencement of commercial operation as defined in the introductory text of paragraph (2) of this definition

and that subsequently undergoes a physical change or is moved to a different location or source, such date shall remain the date of commencement of commercial operation of the unit, which shall continue to be treated as the same unit.

(ii) For a unit with a date for commencement of commercial operation as defined in the introductory text of paragraph (2) of this definition and that is subsequently replaced by a unit at the same or a different source, such date shall remain the replaced unit's date of commencement of commercial operation, and the replacement unit shall be treated as a separate unit with a separate date for commencement of commercial operation as defined in paragraph (1) or (2) of this definition as appropriate.

Common designated representative means, with regard to a control period in a given year, a designated representative where, as of April 1 immediately after the allowance transfer deadline for such control period, the same natural person is authorized under §§ 97.713(a) and 97.715(a) as the designated representative for a group of one or more TR SO_2 Group 2 sources and units located in a State (and Indian country within the borders of such State).

Common designated representative's assurance level means, with regard to a specific common designated representative and a State (and Indian country within the borders of such State) and control period in a given year for which the State assurance level is exceeded as described in § 97.706(c)(2)(iii), the common designated representative's share of the State SO_2 Group 2 trading budget with the variability limit for the State for such control period.

Common designated representative's share means, with regard to a specific common designated representative for a control period in a given year:

(1) With regard to a total amount of SO_2 emissions from all TR SO_2 Group 2 units in a State (and Indian country within the borders of such State) during such control period, the total tonnage of SO_2 emissions during such control period from a group of one or more TR SO_2 Group 2 units located in such State (and such Indian country) and having the common designated representative for such control period;

(2) With regard to a State SO_2 Group 2 trading budget with the variability limit for such control period, the amount (rounded to the nearest allowance) equal to the sum of the total amount of TR SO_2 Group 2 allowances allocated for such control period to a group of one or more TR SO_2 Group 2 units located in the State (and Indian country within the borders of such State) and having the common designated representative for such control period and of the total amount of TR SO_2 Group 2 allowances purchased by an owner or operator of such TR SO_2 Group 2 units in an auction for such control period and submitted by the State or the permitting authority to the Administrator for recordation in the compliance accounts for such TR SO_2 Group 2 units in accordance with the TR SO_2 Group 2 allowance auction provisions in a SIP revision approved by the Administrator under § 52.39(h) or (i) of this chapter, multiplied by the sum of the State SO_2 Group 2 trading budget under § 97.710(a) and the State's variability limit under § 97.710(b) for such control period and divided by such State SO_2 Group 2 trading budget;

(3) Provided that, in the case of a unit that operates during, but has no amount of TR SO_2 Group 2 allowances allocated under §§ 97.711 and 97.712 for, such control period, the unit shall be treated, solely for purposes of this definition, as being allocated an amount (rounded to the nearest allowance) of TR SO_2 Group 2 allowances for such control period equal to the unit's allowable SO_2 emission rate applicable to such control period, multiplied by a capacity factor of 0.85 (if the unit is a boiler combusting any amount of coal or coal-derived fuel during such control period), 0.24 (if the unit is a simple combustion turbine during such control period), 0.67 (if the unit is a combined cycle turbine during such control period), 0.74 (if the unit is an integrated coal gasification combined cycle unit during such control period), or 0.36 (for any other unit), multiplied by the unit's maximum hourly load as reported in accordance with this subpart and by 8,760 hours/control period, and divided by 2,000 lb/ton.

Common stack means a single flue through which emissions from 2 or more units are exhausted.

Compliance account means an Allowance Management System account, established by the Administrator for a TR SO_2 Group 2 source under this subpart, in which any TR SO_2 Group 2 allowance allocations to the TR SO_2 Group 2 units at the source are recorded and in which are held any TR SO_2 Group 2 allowances available for use for a control period in a given year in complying with the source's TR SO_2 Group 2 emissions limitation in accordance with §§ 97.706 and 97.724.

Continuous emission monitoring system or *CEMS* means the equipment required under this subpart to sample, analyze, measure, and provide, by means of readings recorded at least once every 15 minutes and using an automated data acquisition and handling system (DAHS), a permanent record of SO_2 emissions, stack gas volumetric flow rate, stack gas moisture content, and O_2 or CO_2 concentration (as applicable), in a manner consistent with part 75 of this chapter and §§ 97.730 through 97.735. The following systems are the principal types of continuous emission monitoring systems:

(1) A flow monitoring system, consisting of a stack flow rate monitor and an automated data acquisition and handling system and providing a permanent, continuous record of stack gas volumetric flow rate, in standard cubic feet per hour (scfh);

(2) A SO_2 monitoring system, consisting of a SO_2 pollutant concentration monitor and an automated data acquisition and handling system and providing a permanent, continuous record of SO_2 emissions, in parts per million (ppm);

(3) A moisture monitoring system, as defined in § 75.11(b)(2) of this chapter and providing a permanent, continuous record of the stack gas moisture content, in percent H_2O;

(4) A CO_2 monitoring system, consisting of a CO_2 pollutant concentration monitor (or an O_2 monitor plus suitable mathematical equations from which the CO_2 concentration is derived) and an automated data acquisition and handling system and providing a permanent, continuous record of CO_2 emissions, in percent CO_2; and

(5) An O_2 monitoring system, consisting of an O_2 concentration monitor and an automated data acquisition and handling system and providing a permanent, continuous record of O_2, in percent O_2.

Control period means the period starting January 1 of a calendar year, except as provided in § 97.706(c)(3), and ending on December 31 of the same year, inclusive.

Designated representative means, for a TR SO_2 Group 2 source and each TR SO_2 Group 2 unit at the source, the natural person who is authorized by the owners and operators of the source and all such units at the source, in accordance with this subpart, to represent and legally bind each owner and operator in matters pertaining to the TR SO_2 Group 2 Trading Program. If the TR SO_2 Group 2 source is also subject to the Acid Rain Program, TR NO_X Annual Trading Program, or TR NO_X Ozone Season Trading Program, then this natural person shall be the same

natural person as the designated representative, as defined in the respective program.

Emissions means air pollutants exhausted from a unit or source into the atmosphere, as measured, recorded, and reported to the Administrator by the designated representative, and as modified by the Administrator:

(1) In accordance with this subpart; and

(2) With regard to a period before the unit or source is required to measure, record, and report such air pollutants in accordance with this subpart, in accordance with part 75 of this chapter.

Excess emissions means any ton of emissions from the TR SO_2 Group 2 units at a TR SO_2 Group 2 source during a control period in a given year that exceeds the TR SO_2 Group 2 emissions limitation for the source for such control period.

Fossil fuel means—

(1) Natural gas, petroleum, coal, or any form of solid, liquid, or gaseous fuel derived from such material; or

(2) For purposes of applying the limitation on ''average annual fuel consumption of fossil fuel'' in §§ 97.704(b)(2)(i)(B) and (ii), natural gas, petroleum, coal, or any form of solid, liquid, or gaseous fuel derived from such material for the purpose of creating useful heat.

Fossil-fuel-fired means, with regard to a unit, combusting any amount of fossil fuel in 2005 or any calendar year thereafter.

General account means an Allowance Management System account, established under this subpart, that is not a compliance account or an assurance account.

Generator means a device that produces electricity.

Gross electrical output means, for a unit, electricity made available for use, including any such electricity used in the power production process (which process includes, but is not limited to, any on-site processing or treatment of fuel combusted at the unit and any on-site emission controls).

Heat input means, for a unit for a specified period of time, the product (in mmBtu/time) of the gross calorific value of the fuel (in mmBtu/lb) fed into the unit multiplied by the fuel feed rate (in lb of fuel/time), as measured, recorded, and reported to the Administrator by the designated representative and as modified by the Administrator in accordance with this subpart and excluding the heat derived from preheated combustion air, recirculated flue gases, or exhaust.

Heat input rate means, for a unit, the amount of heat input (in mmBtu) divided by unit operating time (in hr) or, for a unit and a specific fuel, the amount of heat input attributed to the fuel (in mmBtu) divided by the unit operating time (in hr) during which the unit combusts the fuel.

Heat rate means, for a unit, the unit's maximum design heat input (in Btu/hr), divided by the product of 1,000,000 Btu/mmBtu and the unit's maximum hourly load.

Indian country means ''Indian country'' as defined in 18 U.S.C. 1151.

Life-of-the-unit, firm power contractual arrangement means a unit participation power sales agreement under which a utility or industrial customer reserves, or is entitled to receive, a specified amount or percentage of nameplate capacity and associated energy generated by any specified unit and pays its proportional amount of such unit's total costs, pursuant to a contract:

(1) For the life of the unit;

(2) For a cumulative term of no less than 30 years, including contracts that permit an election for early termination; or

(3) For a period no less than 25 years or 70 percent of the economic useful life of the unit determined as of the time the unit is built, with option rights to purchase or release some portion of the nameplate capacity and associated energy generated by the unit at the end of the period.

Maximum design heat input means, for a unit, the maximum amount of fuel per hour (in Btu/hr) that the unit is capable of combusting on a steady state basis as of the initial installation of the unit as specified by the manufacturer of the unit.

Monitoring system means any monitoring system that meets the requirements of this subpart, including a continuous emission monitoring system, an alternative monitoring system, or an excepted monitoring system under part 75 of this chapter.

Nameplate capacity means, starting from the initial installation of a generator, the maximum electrical generating output (in MWe, rounded to the nearest tenth) that the generator is capable of producing on a steady state basis and during continuous operation (when not restricted by seasonal or other deratings) as of such installation as specified by the manufacturer of the generator or, starting from the completion of any subsequent physical change in the generator resulting in an increase in the maximum electrical generating output that the generator is capable of producing on a steady state basis and during continuous operation (when not restricted by seasonal or other deratings), such increased maximum amount (in MWe, rounded to the nearest tenth) as of such completion as specified by the person conducting the physical change.

Natural gas means ''natural gas'' as defined in § 72.2 of this chapter.

Newly affected TR SO_2 Group 2 unit means a unit that was not a TR SO_2 Group 2 unit when it began operating but that thereafter becomes a TR SO_2 Group 2 unit.

Operate or *operation* means, with regard to a unit, to combust fuel.

Operator means, for a TR SO_2 Group 2 source or a TR SO_2 Group 2 unit at a source respectively, any person who operates, controls, or supervises a TR SO_2 Group 2 unit at the source or the TR SO_2 Group 2 unit and shall include, but not be limited to, any holding company, utility system, or plant manager of such source or unit.

Owner means, for a TR SO_2 Group 2 source or a TR SO_2 Group 2 unit at a source respectively, any of the following persons:

(1) Any holder of any portion of the legal or equitable title in a TR SO_2 Group 2 unit at the source or the TR SO_2 Group 2 unit;

(2) Any holder of a leasehold interest in a TR SO_2 Group 2 unit at the source or the TR SO_2 Group 2 unit, provided that, unless expressly provided for in a leasehold agreement, ''owner'' shall not include a passive lessor, or a person who has an equitable interest through such lessor, whose rental payments are not based (either directly or indirectly) on the revenues or income from such TR SO_2 Group 2 unit; and

(3) Any purchaser of power from a TR SO_2 Group 2 unit at the source or the TR SO_2 Group 2 unit under a life-of-the-unit, firm power contractual arrangement.

Permanently retired means, with regard to a unit, a unit that is unavailable for service and that the unit's owners and operators do not expect to return to service in the future.

Permitting authority means ''permitting authority'' as defined in §§ 70.2 and 71.2 of this chapter.

Potential electrical output capacity means, for a unit, 33 percent of the unit's maximum design heat input, divided by 3,413 Btu/kWh, divided by 1,000 kWh/MWh, and multiplied by 8,760 hr/yr.

Receive or *receipt of* means, when referring to the Administrator, to come into possession of a document, information, or correspondence (whether sent in hard copy or by authorized electronic transmission), as indicated in an official log, or by a notation made on the document,

information, or correspondence, by the Administrator in the regular course of business.

Recordation, record, or *recorded* means, with regard to TR SO_2 Group 2 allowances, the moving of TR SO_2 Group 2 allowances by the Administrator into, out of, or between Allowance Management System accounts, for purposes of allocation, auction, transfer, or deduction.

Reference method means any direct test method of sampling and analyzing for an air pollutant as specified in § 75.22 of this chapter.

Replacement, replace, or *replaced* means, with regard to a unit, the demolishing of a unit, or the permanent retirement and permanent disabling of a unit, and the construction of another unit (the replacement unit) to be used instead of the demolished or retired unit (the replaced unit).

Sequential use of energy means:

(1) The use of reject heat from electricity production in a useful thermal energy application or process; or

(2) The use of reject heat from useful thermal energy application or process in electricity production.

Serial number means, for a TR SO_2 Group 2 allowance, the unique identification number assigned to each TR SO_2 Group 2 allowance by the Administrator.

Solid waste incineration unit means a stationary, fossil-fuel-fired boiler or stationary, fossil-fuel-fired combustion turbine that is a ''solid waste incineration unit'' as defined in section 129(g)(1) of the Clean Air Act.

Source means all buildings, structures, or installations located in one or more contiguous or adjacent properties under common control of the same person or persons. This definition does not change or otherwise affect the definition of ''major source'', ''stationary source'', or ''source'' as set forth and implemented in a title V operating permit program or any other program under the Clean Air Act.

State means one of the States that is subject to the TR SO_2 Group 2 Trading Program pursuant to § 52.39(a), (c), (g), (h), and (i) of this chapter.

Submit or *serve* means to send or transmit a document, information, or correspondence to the person specified in accordance with the applicable regulation:

(1) In person;

(2) By United States Postal Service; or

(3) By other means of dispatch or transmission and delivery;

(4) Provided that compliance with any ''submission'' or ''service'' deadline shall be determined by the date of dispatch, transmission, or mailing and not the date of receipt.

Topping-cycle unit means a unit in which the energy input to the unit is first used to produce useful power, including electricity, where at least some of the reject heat from the electricity production is then used to provide useful thermal energy.

Total energy input means, for a unit, total energy of all forms supplied to the unit, excluding energy produced by the unit. Each form of energy supplied shall be measured by the lower heating value of that form of energy calculated as follows:

$$LHV = HHV - 10.55(W + 9H)$$

Where:

LHV = lower heating value of the form of energy in Btu/lb,

HHV = higher heating value of the form of energy in Btu/lb,

W = weight % of moisture in the form of energy, and

H = weight % of hydrogen in the form of energy.

Total energy output means, for a unit, the sum of useful power and useful thermal energy produced by the unit.

TR NO_X Annual Trading Program means a multi-state NO_X air pollution control and emission reduction program established in accordance with subpart AAAAA of this part and § 52.38(a) of this chapter (including such a program that is revised in a SIP revision approved by the Administrator under § 52.38(a)(3) or (4) of this chapter or that is established in a SIP revision approved by the Administrator under § 52.38(a)(5) of this chapter), as a means of mitigating interstate transport of fine particulates and NO_X.

TR NO_X Ozone Season Trading Program means a multi-state NO_X air pollution control and emission reduction program established in accordance with subpart BBBBB of this part and § 52.38(b) of this chapter (including such a program that is revised in a SIP revision approved by the Administrator under § 52.38(b)(3) or (4) of this chapter or that is established in a SIP revision approved by the Administrator under § 52.38(b)(5) of this chapter), as a means of mitigating interstate transport of ozone and NO_X.

TR SO_2 Group 2 allowance means a limited authorization issued and allocated or auctioned by the Administrator under this subpart, or by a State or permitting authority under a SIP revision approved by the Administrator under § 52.39(g), (h), or (i) of this chapter, to emit one ton of SO_2 during a control period of the specified calendar year for which the authorization is allocated or auctioned or of any calendar year thereafter under the TR SO_2 Group 2 Trading Program.

TR SO_2 Group 2 allowance deduction or *deduct TR SO_2* Group 2 allowances means the permanent withdrawal of TR SO_2 Group 2 allowances by the Administrator from a compliance account (*e.g.,* in order to account for compliance with the TR SO_2 Group 2 emissions limitation) or from an assurance account (*e.g.,* in order to account for compliance with the assurance provisions under §§ 97.706 and 97.725).

TR SO_2 Group 2 allowances held or *hold TR SO_2* Group 2 allowances means the TR SO_2 Group 2 allowances treated as included in an Allowance Management System account as of a specified point in time because at that time they:

(1) Have been recorded by the Administrator in the account or transferred into the account by a correctly submitted, but not yet recorded, TR SO_2 Group 2 allowance transfer in accordance with this subpart; and

(2) Have not been transferred out of the account by a correctly submitted, but not yet recorded, TR SO_2 Group 2 allowance transfer in accordance with this subpart.

TR SO_2 Group 2 emissions limitation means, for a TR SO_2 Group 2 source, the tonnage of SO_2 emissions authorized in a control period by the TR SO_2 Group 2 allowances available for deduction for the source under § 97.724(a) for such control period.

TR SO_2 Group 2 source means a source that includes one or more TR SO_2 Group 2 units.

TR SO_2 Group 2 Trading Program means a multi-state SO_2 air pollution control and emission reduction program established in accordance with this subpart and § 52.39(a), (c), and (g) through (k) of this chapter (including such a program that is revised in a SIP revision approved by the Administrator under § 52.39(g) or (h) of this chapter or that is established in a SIP revision approved by the Administrator under § 52.39(i) of this chapter), as a means of mitigating interstate transport of fine particulates and SO_2.

TR SO_2 Group 2 unit means a unit that is subject to the TR SO_2 Group 2 Trading Program under § 97.704.

Unit means a stationary, fossil-fuel-fired boiler, stationary, fossil-fuel-fired combustion turbine, or other stationary, fossil-fuel-fired combustion device. A unit that undergoes a physical change or is moved to a different location or source shall continue to be treated as the same unit. A unit (the replaced unit) that is replaced by another unit (the

replacement unit) at the same or a different source shall continue to be treated as the same unit, and the replacement unit shall be treated as a separate unit.

Unit operating day means, with regard to a unit, a calendar day in which the unit combusts any fuel.

Unit operating hour or hour of unit operation means, with regard to a unit, an hour in which the unit combusts any fuel.

Useful power means, with regard to a unit, electricity or mechanical energy that the unit makes available for use, excluding any such energy used in the power production process (which process includes, but is not limited to, any on-site processing or treatment of fuel combusted at the unit and any on-site emission controls).

Useful thermal energy means thermal energy that is:

(1) Made available to an industrial or commercial process (not a power production process), excluding any heat contained in condensate return or makeup water;

(2) Used in a heating application (*e.g.,* space heating or domestic hot water heating); or

(3) Used in a space cooling application (*i.e.,* in an absorption chiller).

Utility power distribution system means the portion of an electricity grid owned or operated by a utility and dedicated to delivering electricity to customers.

§ 97.703 Measurements, abbreviations, and acronyms.

Measurements, abbreviations, and acronyms used in this subpart are defined as follows:

Btu—British thermal unit
CO_2—carbon dioxide
H_2O—water
hr—hour
kW—kilowatt electrical
kWh—kilowatt hour
lb—pound
mmBtu—million Btu
MWe—megawatt electrical
MWh—megawatt hour
NO_X—nitrogen oxides
O_2—oxygen
ppm—parts per million
scfh—standard cubic feet per hour
SO_2—sulfur dioxide
yr—year

§ 97.704 Applicability.

(a) Except as provided in paragraph (b) of this section:

(1) The following units in a State (and Indian country within the borders of such State) shall be TR SO_2 Group 2 units, and any source that includes one or more such units shall be a TR SO_2 Group 2 source, subject to the requirements of this subpart: Any stationary, fossil-fuel-fired boiler or stationary, fossil-fuel-fired combustion turbine serving at any time, on or after January 1, 2005, a generator with nameplate capacity of more than 25 MWe producing electricity for sale.

(2) If a stationary boiler or stationary combustion turbine that, under paragraph (a)(1) of this section, is not a TR SO_2 Group 2 unit begins to combust fossil fuel or to serve a generator with nameplate capacity of more than 25 MWe producing electricity for sale, the unit shall become a TR SO_2 Group 2 unit as provided in paragraph (a)(1) of this section on the first date on which it both combusts fossil fuel and serves such generator.

(b) Any unit in a State (and Indian country within the borders of such State) that otherwise is a TR SO_2 Group 2 unit under paragraph (a) of this section and that meets the requirements set forth in paragraph (b)(1)(i) or (2)(i) of this section shall not be a TR SO_2 Group 2 unit:

(1)(i) Any unit:

(A) Qualifying as a cogeneration unit throughout the later of 2005 or the 12-month period starting on the date the unit first produces electricity and continuing to qualify as a cogeneration unit throughout each calendar year ending after the later of 2005 or such 12-month period; and

(B) Not supplying in 2005 or any calendar year thereafter more than one-third of the unit's potential electric output capacity or 219,000 MWh, whichever is greater, to any utility power distribution system for sale.

(ii) If, after qualifying under paragraph (b)(1)(i) of this section as not being a TR SO_2 Group 2 unit, a unit subsequently no longer meets all the requirements of paragraph (b)(1)(i) of this section, the unit shall become a TR SO_2 Group 2 unit starting on the earlier of January 1 after the first calendar year during which the unit first no longer qualifies as a cogeneration unit or January 1 after the first calendar year during which the unit no longer meets the requirements of paragraph (b)(1)(i)(B) of this section. The unit shall thereafter continue to be a TR SO_2 Group 2 unit.

(2)(i) Any unit:

(A) Qualifying as a solid waste incineration unit throughout the later of 2005 or the 12-month period starting on the date the unit first produces electricity and continuing to qualify as a solid waste incineration unit throughout each calendar year ending after the later of 2005 or such 12-month period; and

(B) With an average annual fuel consumption of fossil fuel for the first 3 consecutive calendar years of operation starting no earlier than 2005 of less than 20 percent (on a Btu basis) and an average annual fuel consumption of fossil fuel for any 3 consecutive calendar years thereafter of less than 20 percent (on a Btu basis).

(ii) If, after qualifying under paragraph (b)(2)(i) of this section as not being a TR SO_2 Group 2 unit, a unit subsequently no longer meets all the requirements of paragraph (b)(1)(i) of this section, the unit shall become a TR SO_2 Group 2 unit starting on the earlier of January 1 after the first calendar year during which the unit first no longer qualifies as a solid waste incineration unit or January 1 after the first 3 consecutive calendar years after 2005 for which the unit has an average annual fuel consumption of fossil fuel of 20 percent or more. The unit shall thereafter continue to be a TR SO_2 Group 2 unit.

(c) A certifying official of an owner or operator of any unit or other equipment may submit a petition (including any supporting documents) to the Administrator at any time for a determination concerning the applicability, under paragraphs (a) and (b) of this section or a SIP revision approved under § 52.39(h) or (i) of this chapter, of the TR SO_2 Group 2 Trading Program to the unit or other equipment.

(1) Petition content. The petition shall be in writing and include the identification of the unit or other equipment and the relevant facts about the unit or other equipment. The petition and any other documents provided to the Administrator in connection with the petition shall include the following certification statement, signed by the certifying official: ''I am authorized to make this submission on behalf of the owners and operators of the unit or other equipment for which the submission is made. I certify under penalty of law that I have personally examined, and am familiar with, the statements and information submitted in this document and all its attachments. Based on my inquiry of those individuals with primary responsibility for obtaining the information, I certify that the statements and information are to the best of my knowledge and belief true, accurate, and complete. I am aware that there are significant penalties for submitting false statements and information or omitting required statements and information, including the possibility of fine or imprisonment.''

(2) Response. The Administrator will issue a written response to the petition

and may request supplemental information determined by the Administrator to be relevant to such petition. The Administrator's determination concerning the applicability, under paragraphs (a) and (b) of this section, of the TR SO_2 Group 2 Trading Program to the unit or other equipment shall be binding on any State or permitting authority unless the Administrator determines that the petition or other documents or information provided in connection with the petition contained significant, relevant errors or omissions.

§ 97.705 Retired unit exemption.

(a)(1) Any TR SO_2 Group 2 unit that is permanently retired shall be exempt from § 97.706(b) and (c)(1), § 97.724, and §§ 97.730 through 97.735.

(2) The exemption under paragraph (a)(1) of this section shall become effective the day on which the TR SO_2 Group 2 unit is permanently retired. Within 30 days of the unit's permanent retirement, the designated representative shall submit a statement to the Administrator. The statement shall state, in a format prescribed by the Administrator, that the unit was permanently retired on a specified date and will comply with the requirements of paragraph (b) of this section.

(b) Special provisions. (1) A unit exempt under paragraph (a) of this section shall not emit any SO_2, starting on the date that the exemption takes effect.

(2) For a period of 5 years from the date the records are created, the owners and operators of a unit exempt under paragraph (a) of this section shall retain, at the source that includes the unit, records demonstrating that the unit is permanently retired. The 5-year period for keeping records may be extended for cause, at any time before the end of the period, in writing by the Administrator. The owners and operators bear the burden of proof that the unit is permanently retired.

(3) The owners and operators and, to the extent applicable, the designated representative of a unit exempt under paragraph (a) of this section shall comply with the requirements of the TR SO_2 Group 2 Trading Program concerning all periods for which the exemption is not in effect, even if such requirements arise, or must be complied with, after the exemption takes effect.

(4) A unit exempt under paragraph (a) of this section shall lose its exemption on the first date on which the unit resumes operation. Such unit shall be treated, for purposes of applying allocation, monitoring, reporting, and recordkeeping requirements under this subpart, as a unit that commences commercial operation on the first date on which the unit resumes operation.

§ 97.706 Standard requirements.

(a) *Designated representative requirements.* The owners and operators shall comply with the requirement to have a designated representative, and may have an alternate designated representative, in accordance with §§ 97.713 through 97.718.

(b) *Emissions monitoring, reporting, and recordkeeping requirements.* (1) The owners and operators, and the designated representative, of each TR SO_2 Group 2 source and each TR SO_2 Group 2 unit at the source shall comply with the monitoring, reporting, and recordkeeping requirements of §§ 97.730 through 97.735.

(2) The emissions data determined in accordance with §§ 97.730 through 97.735 shall be used to calculate allocations of TR SO_2 Group 2 allowances under §§ 97.711(a)(2) and (b) and 97.712 and to determine compliance with the TR SO_2 Group 2 emissions limitation and assurance provisions under paragraph (c) of this section, provided that, for each monitoring location from which mass emissions are reported, the mass emissions amount used in calculating such allocations and determining such compliance shall be the mass emissions amount for the monitoring location determined in accordance with §§ 97.730 through 97.735 and rounded to the nearest ton, with any fraction of a ton less than 0.50 being deemed to be zero.

(c) *SO_2 emissions requirements.* (1) TR SO_2 Group 2 emissions limitation. (i) As of the allowance transfer deadline for a control period in a given year, the owners and operators of each TR SO_2 Group 2 source and each TR SO_2 Group 2 unit at the source shall hold, in the source's compliance account, TR SO_2 Group 2 allowances available for deduction for such control period under § 97.724(a) in an amount not less than the tons of total SO_2 emissions for such control period from all TR SO_2 Group 2 units at the source.

(ii) If total SO_2 emissions during a control period in a given year from the TR SO_2 Group 2 units at a TR SO_2 Group 2 source are in excess of the TR SO_2 Group 2 emissions limitation set forth in paragraph (c)(1)(i) of this section, then:

(A) The owners and operators of the source and each TR SO_2 Group 2 unit at the source shall hold the TR SO_2 Group 2 allowances required for deduction under § 97.724(d); and

(B) The owners and operators of the source and each TR SO_2 Group 2 unit at the source shall pay any fine, penalty, or assessment or comply with any other remedy imposed, for the same violations, under the Clean Air Act, and each ton of such excess emissions and each day of such control period shall constitute a separate violation of this subpart and the Clean Air Act.

(2) TR SO_2 Group 2 assurance provisions. (i) If total SO_2 emissions during a control period in a given year from all TR SO_2 Group 2 units at TR SO_2 Group 2 sources in a State (and Indian country within the borders of such State) exceed the State assurance level, then the owners and operators of such sources and units in each group of one or more sources and units having a common designated representative for such control period, where the common designated representative's share of such SO_2 emissions during such control period exceeds the common designated representative's assurance level for the State and such control period, shall hold (in the assurance account established for the owners and operators of such group) TR SO_2 Group 2 allowances available for deduction for such control period under § 97.725(a) in an amount equal to two times the product (rounded to the nearest whole number), as determined by the Administrator in accordance with § 97.725(b), of multiplying—

(A) The quotient of the amount by which the common designated representative's share of such SO_2 emissions exceeds the common designated representative's assurance level divided by the sum of the amounts, determined for all common designated representatives for such sources and units in the State (and Indian country within the borders of such State) for such control period, by which each common designated representative's share of such SO_2 emissions exceeds the respective common designated representative's assurance level; and

(B) The amount by which total SO_2 emissions from all TR SO_2 Group 2 units at TR SO_2 Group 2 sources in the State (and Indian country within the borders of such State) for such control period exceed the State assurance level.

(ii) The owners and operators shall hold the TR SO_2 Group 2 allowances required under paragraph (c)(2)(i) of this section, as of midnight of November 1 (if it is a business day), or midnight of the first business day thereafter (if November 1 is not a business day), immediately after such control period.

(iii) Total SO_2 emissions from all TR SO_2 Group 2 units at TR SO_2 Group 2

sources in a State (and Indian country within the borders of such State) during a control period in a given year exceed the State assurance level if such total SO_2 emissions exceed the sum, for such control period, of the State SO_2 Group 2 trading budget under § 97.710(a) and the State's variability limit under § 97.710(b).

(iv) It shall not be a violation of this subpart or of the Clean Air Act if total SO_2 emissions from all TR SO_2 Group 2 units at TR SO_2 Group 2 sources in a State (and Indian country within the borders of such State) during a control period exceed the State assurance level or if a common designated representative's share of total SO_2 emissions from the TR SO_2 Group 2 units at TR SO_2 Group 2 sources in a State (and Indian country within the borders of such State) during a control period exceeds the common designated representative's assurance level.

(v) To the extent the owners and operators fail to hold TR SO_2 Group 2 allowances for a control period in a given year in accordance with paragraphs (c)(2)(i) through (iii) of this section,

(A) The owners and operators shall pay any fine, penalty, or assessment or comply with any other remedy imposed under the Clean Air Act; and

(B) Each TR SO_2 Group 2 allowance that the owners and operators fail to hold for such control period in accordance with paragraphs (c)(2)(i) through (iii) of this section and each day of such control period shall constitute a separate violation of this subpart and the Clean Air Act.

(3) Compliance periods. A TR SO_2 Group 2 unit shall be subject to the requirements under paragraphs (c)(1) and (c)(2) of this section for the control period starting on the later of January 1, 2012 or the deadline for meeting the unit's monitor certification requirements under § 97.730(b) and for each control period thereafter.

(4) Vintage of allowances held for compliance. (i) A TR SO_2 Group 2 allowance held for compliance with the requirements under paragraph (c)(1)(i) of this section for a control period in a given year must be a TR SO_2 Group 2 allowance that was allocated for such control period or a control period in a prior year.

(ii) A TR SO_2 Group 2 allowance held for compliance with the requirements under paragraphs (c)(1)(ii)(A) and (2)(i) through (iii) of this section for a control period in a given year must be a TR SO_2 Group 2 allowance that was allocated for a control period in a prior year or the control period in the given year or in the immediately following year.

(5) Allowance Management System requirements. Each TR SO_2 Group 2 allowance shall be held in, deducted from, or transferred into, out of, or between Allowance Management System accounts in accordance with this subpart.

(6) Limited authorization. A TR SO_2 Group 2 allowance is a limited authorization to emit one ton of SO_2 during the control period in one year. Such authorization is limited in its use and duration as follows:

(i) Such authorization shall only be used in accordance with the TR SO_2 Group 2 Trading Program; and

(ii) Notwithstanding any other provision of this subpart, the Administrator has the authority to terminate or limit the use and duration of such authorization to the extent the Administrator determines is necessary or appropriate to implement any provision of the Clean Air Act.

(7) Property right. A TR SO_2 Group 2 allowance does not constitute a property right.

(d) *Title V permit requirements.* (1) No title V permit revision shall be required for any allocation, holding, deduction, or transfer of TR SO_2 Group 2 allowances in accordance with this subpart.

(2) A description of whether a unit is required to monitor and report SO_2 emissions using a continuous emission monitoring system (under subpart H of part 75 of this chapter), an excepted monitoring system (under appendices D and E to part 75 of this chapter), a low mass emissions excepted monitoring methodology (under § 75.19 of this chapter), or an alternative monitoring system (under subpart E of part 75 of this chapter) in accordance with §§ 97.730 through 97.735 may be added to, or changed in, a title V permit using minor permit modification procedures in accordance with §§ 70.7(e)(2) and 71.7(e)(1) of this chapter, provided that the requirements applicable to the described monitoring and reporting (as added or changed, respectively) are already incorporated in such permit. This paragraph explicitly provides that the addition of, or change to, a unit's description as described in the prior sentence is eligible for minor permit modification procedures in accordance with §§ 70.7(e)(2)(i)(B) and 71.7(e)(1)(i)(B) of this chapter.

(e) *Additional recordkeeping and reporting requirements.* (1) Unless otherwise provided, the owners and operators of each TR SO_2 Group 2 source and each TR SO_2 Group 2 unit at the source shall keep on site at the source each of the following documents (in hardcopy or electronic format) for a period of 5 years from the date the document is created. This period may be extended for cause, at any time before the end of 5 years, in writing by the Administrator.

(i) The certificate of representation under § 97.716 for the designated representative for the source and each TR SO_2 Group 2 unit at the source and all documents that demonstrate the truth of the statements in the certificate of representation; provided that the certificate and documents shall be retained on site at the source beyond such 5-year period until such certificate of representation and documents are superseded because of the submission of a new certificate of representation under § 97.716 changing the designated representative.

(ii) All emissions monitoring information, in accordance with this subpart.

(iii) Copies of all reports, compliance certifications, and other submissions and all records made or required under, or to demonstrate compliance with the requirements of, the TR SO_2 Group 2 Trading Program.

(2) The designated representative of a TR SO_2 Group 2 source and each TR SO_2 Group 2 unit at the source shall make all submissions required under the TR SO_2 Group 2 Trading Program, except as provided in § 97.718. This requirement does not change, create an exemption from, or or otherwise affect the responsible official submission requirements under a title V operating permit program in parts 70 and 71 of this chapter.

(f) *Liability.* (1) Any provision of the TR SO_2 Group 2 Trading Program that applies to a TR SO_2 Group 2 source or the designated representative of a TR SO_2 Group 2 source shall also apply to the owners and operators of such source and of the TR SO_2 Group 2 units at the source.

(2) Any provision of the TR SO_2 Group 2 Trading Program that applies to a TR SO_2 Group 2 unit or the designated representative of a TR SO_2 Group 2 unit shall also apply to the owners and operators of such unit.

(g) *Effect on other authorities.* No provision of the TR SO_2 Group 2 Trading Program or exemption under § 97.705 shall be construed as exempting or excluding the owners and operators, and the designated representative, of a TR SO_2 Group 2 source or TR SO_2 Group 2 unit from compliance with any other provision of the applicable, approved State implementation plan, a federally enforceable permit, or the Clean Air Act.

§ 97.707 Computation of time.

(a) Unless otherwise stated, any time period scheduled, under the TR SO_2 Group 2 Trading Program, to begin on the occurrence of an act or event shall begin on the day the act or event occurs.

(b) Unless otherwise stated, any time period scheduled, under the TR SO_2 Group 2 Trading Program, to begin before the occurrence of an act or event shall be computed so that the period ends the day before the act or event occurs.

(c) Unless otherwise stated, if the final day of any time period, under the TR SO_2 Group 2 Trading Program, is not a business day, the time period shall be extended to the next business day.

§ 97.708 Administrative appeal procedures.

The administrative appeal procedures for decisions of the Administrator under the TR SO_2 Group 2 Trading Program are set forth in part 78 of this chapter.

§ 97.709 [Reserved]

§ 97.710 State SO_2 Group 2 trading budgets, new unit set-asides, Indian country new unit set-aside, and variability limits.

(a) The State SO_2 Group 2 trading budgets, new unit set-asides, and Indian country new unit set-asides for allocations of TR SO_2 Group 2 allowances for the control periods in 2012 and thereafter are as follows:

State	SO_2 Group 2 trading budget (tons) * for 2012 and 2013	New unit set-aside (tons) for 2012 and 2013	Indian country new unit set-aside (tons) for 2012 and 2013
Alabama	216,033	4,321	.....
Georgia	158,527	3,171	.....
Kansas	41,528	789	42
Minnesota	41,981	798	42
Nebraska	65,052	2,537	65
South Carolina	88,620	1,683	89
Texas	243,954	11,954	244

State	SO_2 Group 2 trading budget (tons) * for 2014 and thereafter	New unit set-aside (tons) for 2014 and thereafter	Indian country new unit set-aside (tons) for 2014 and thereafter
Alabama	213,258	4,265	.....
Georgia	95,231	1,905	.....
Kansas	41,528	789	42
Minnesota	41,981	798	42
Nebraska	65,052	2,537	65
South Carolina	88,620	1,683	89
Texas	243,954	11,954	244

* Each trading budget includes the new unit set-aside and, where applicable, the Indian country new unit set-aside and does not include the variability limit.

(b) The States' variability limits for the State SO_2 Group 2 trading budgets for the control periods in 2012 and thereafter are as follows:

State	Variability limits for 2012 and 2013	Variability limits for 2014 and thereafter
Alabama	38,886	38,386
Georgia	28,535	17,142
Kansas	7,475	7,475
Minnesota	7,557	7,557
Nebraska	11,709	11,709
South Carolina	15,952	15,952
Texas	43,912	43,912

§ 97.711 Timing requirements for TR SO_2 Group 2 allowance allocations.

(a) *Existing units.* (1) TR SO_2 Group 2 allowances are allocated, for the control periods in 2012 and each year thereafter, as provided in a notice of data availability issued by the Administrator. Providing an allocation to a unit in such notice does not constitute a determination that the unit is a TR SO_2 Group 2 unit, and not providing an allocation to a unit in such notice does not constitute a determination that the unit is not a TR SO_2 Group 2 unit.

(2) Notwithstanding paragraph (a)(1) of this section, if a unit provided an allocation in the notice of data availability issued under paragraph (a)(1) of this section does not operate, starting after 2011, during the control period in two consecutive years, such unit will not be allocated the TR SO_2 Group 2 allowances provided in such notice for the unit for the control periods in the fifth year after the first such year and in each year after that fifth year. All TR SO_2 Group 2 allowances that would otherwise have been allocated to such unit will be allocated to the new unit set-aside for the State where such unit is located and for the respective years involved. If such unit resumes operation, the Administrator will allocate TR SO_2 Group 2 allowances to the unit in accordance with paragraph (b) of this section.

(b) *New units.* (1) New unit set-asides. (i) By June 1, 2012 and June 1 of each year thereafter, the Administrator will calculate the TR SO_2 Group 2 allowance allocation to each TR SO_2 Group 2 unit in a State, in accordance with § 97.712(a)(2) through (7) and (12), for the control period in the year of the applicable calculation deadline under this paragraph and will promulgate a notice of data availability of the results of the calculations.

(ii) For each notice of data availability required in paragraph (b)(1)(i) of this section, the Administrator will provide an opportunity for submission of objections to the calculations referenced in such notice.

(A) Objections shall be submitted by the deadline specified in each notice of data availability required in paragraph (b)(1)(i) of this section and shall be limited to addressing whether the calculations (including the identification of the TR SO_2 Group 2 units) are in accordance with § 97.712(a)(2) through (7) and (12) and §§ 97.706(b)(2) and 97.730 through 97.735.

(B) The Administrator will adjust the calculations to the extent necessary to ensure that they are in accordance with the provisions referenced in paragraph (b)(1)(ii)(A) of this section. By August 1 immediately after the promulgation of each notice of data availability required in paragraph (b)(1)(i) of this section, the Administrator will promulgate a notice of data availability of any adjustments that the Administrator determines to be necessary with regard to allocations under § 97.712(a)(2) through (7) and (12) and the reasons for accepting or rejecting any objections submitted in accordance with paragraph (b)(1)(ii)(A) of this section.

(iii) If the new unit set-aside for such control period contains any TR SO_2 Group 2 allowances that have not been allocated in the applicable notice of data availability required in paragraph (b)(1)(ii) of this section, the Administrator will promulgate, by December 15 immediately after such notice, a notice of data availability that identifies any TR SO_2 Group 2 units that commenced commercial operation during the period starting January 1 of the year before the year of such control period and ending November 30 of year of such control period.

(iv) For each notice of data availability required in paragraph (b)(1)(iii) of this section, the Administrator will provide an opportunity for submission of objections to the identification of TR SO_2 annual units in such notice.

(A) Objections shall be submitted by the deadline specified in each notice of data availability required in paragraph (b)(1)(iii) of this section and shall be limited to addressing whether the identification of TR SO_2 annual units in such notice is in accordance with paragraph (b)(1)(iii) of this section.

(B) The Administrator will adjust the identification of TR SO_2 Group 2 units in the each notice of data availability required in paragraph (b)(1)(iii) of this section to the extent necessary to ensure that it is in accordance with paragraph (b)(1)(iii) of this section and will calculate the TR SO_2 Group 2 allowance allocation to each TR SO_2 Group 2 unit in accordance with § 97.712(a)(9), (10), and (12) and §§ 97.706(b)(2) and 97.730 through 97.735. By February 15 immediately after the promulgation of each notice of data availability required in paragraph (b)(1)(iii) of this section, the Administrator will promulgate a notice of data availability of any adjustments of the identification of TR SO_2 Group 2 units that the Administrator determines to be necessary, the reasons for accepting or rejecting any objections submitted in accordance with paragraph (b)(1)(iv)(A) of this section, and the results of such calculations.

(v) To the extent any TR SO_2 Group 2 allowances are added to the new unit set-aside after promulgation of each notice of data availability required in paragraph (b)(1)(iv) of this section, the Administrator will promulgate additional notices of data availability, as deemed appropriate, of the allocation of such TR SO_2 Group 2 allowances in accordance with § 97.712(a)(10).

(2) Indian country new unit set-asides. (i) By June 1, 2012 and June 1 of each year thereafter, the Administrator will calculate the TR SO_2 Group 2 allowance allocation to each TR SO_2 Group 2 unit in Indian country within the borders of a State, in accordance with § 97.712(b)(2) through (7) and (12), for the control period in the year of the applicable calculation deadline under this paragraph and will promulgate a notice of data availability of the results of the calculations.

(ii) For each notice of data availability required in paragraph (b)(2)(i) of this section, the Administrator will provide an opportunity for submission of objections to the calculations referenced in such notice.

(A) Objections shall be submitted by the deadline specified in each notice of data availability required in paragraph (b)(2)(i) of this section and shall be limited to addressing whether the calculations (including the identification of the TR SO_2 Group 2 units) are in accordance with § 97.712(b)(2) through (7) and (12) and §§ 97.706(b)(2) and 97.730 through 97.735.

(B) The Administrator will adjust the calculations to the extent necessary to ensure that they are in accordance with the provisions referenced in paragraph (b)(2)(ii)(A) of this section. By August 1 immediately after the promulgation of each notice of data availability required in paragraph (b)(2)(i) of this section, the Administrator will promulgate a notice of data availability of any adjustments that the Administrator determines to be necessary with regard to allocations under § 97.712(b)(2) through (7) and (12) and the reasons for accepting or rejecting any objections submitted in accordance with paragraph (b)(2)(ii)(A) of this section.

(iii) If the Indian country new unit set-aside for such control period contains any TR SO_2 Group 2 allowances that have not been allocated in the applicable notice of data availability required in paragraph (b)(2)(ii) of this section, the Administrator will promulgate, by December 15 immediately after such notice, a notice of data availability that identifies any TR SO_2 Group 2 units that commenced commercial operation during the period starting January 1 of the year before the year of such control period and ending November 30 of year of such control period.

(iv) For each notice of data availability required in paragraph (b)(2)(iii) of this section, the Administrator will provide an opportunity for submission of objections to the identification of TR SO_2 annual units in such notice.

(A) Objections shall be submitted by the deadline specified in each notice of data availability required in paragraph (b)(2)(iii) of this section and shall be limited to addressing whether the identification of TR SO_2 annual units in such notice is in accordance with paragraph (b)(2)(iii) of this section.

(B) The Administrator will adjust the identification of TR SO_2 Group 2 units in the each notice of data availability required in paragraph (b)(2)(iii) of this section to the extent necessary to ensure that it is in accordance with paragraph (b)(2)(iii) of this section and will calculate the TR SO_2 Group 2 allowance allocation to each TR SO_2 Group 2 unit in accordance with § 97.712(b)(9), (10), and (12) and §§ 97.706(b)(2) and 97.730 through 97.735. By February 15 immediately after the promulgation of each notice of data availability required in paragraph (b)(2)(iii) of this section, the Administrator will promulgate a notice of data availability of any

adjustments of the identification of TR SO_2 Group 2 units that the Administrator determines to be necessary, the reasons for accepting or rejecting any objections submitted in accordance with paragraph (b)(2)(iv)(A) of this section, and the results of such calculations.

(v) To the extent any TR SO_2 Group 2 allowances are added to the Indian country new unit set-aside after promulgation of each notice of data availability required in paragraph (b)(2)(iv) of this section, the Administrator will promulgate additional notices of data availability, as deemed appropriate, of the allocation of such TR SO_2 Group 2 allowances in accordance with § 97.712(b)(10).

(c) *Units incorrectly allocated TR SO_2* Group 2 allowances. (1) For each control period in 2012 and thereafter, if the Administrator determines that TR SO_2 Group 2 allowances were allocated under paragraph (a) of this section, or under a provision of a SIP revision approved § 52.39(g), (h), or (i) of this chapter, where such control period and the recipient are covered by the provisions of paragraph (c)(1)(i) of this section or were allocated under § 97.712(a)(2) through (7), (9), and (12) and (b)(2) through (7), (9), and (12), or under a provision of a SIP revision approved § 52.39(h) or (i) of this chapter, where such control period and the recipient are covered by the provisions of paragraph (c)(1)(ii) of this section, then the Administrator will notify the designated representative of the recipient and will act in accordance with the procedures set forth in paragraphs (c)(2) through (5) of this section:

(i)(A) The recipient is not actually a TR SO_2 Group 2 unit under § 97.704 as of January 1, 2012 and is allocated TR SO_2 Group 2 allowances for such control period or, in the case of an allocation under a provision of a SIP revision approved under § 52.39(g), (h), or (i) of this chapter, the recipient is not actually a TR SO_2 Group 2 unit as of January 1, 2012 and is allocated TR SO_2 Group 2 allowances for such control period that the SIP revision provides should be allocated only to recipients that are TR SO_2 Group 2 units as of January 1, 2012; or

(B) The recipient is not located as of January 1 of the control period in the State from whose SO_2 Group 2 trading budget the TR SO_2 Group 2 allowances allocated under paragraph (a) of this section, or under a provision of a SIP revision approved under § 52.39(g), (h), or (i) of this chapter, were allocated for such control period.

(ii) The recipient is not actually a TR SO_2 Group 2 unit under § 97.704 as of January 1 of such control period and is allocated TR SO_2 Group 2 allowances for such control period or, in the case of an allocation under a provision of a SIP revision approved under § 52.39(g), (h), or (i) of this chapter, the recipient is not actually a TR SO_2 Group 2 unit as of January 1 of such control period and is allocated TR SO_2 Group 2 allowances for such control period that the SIP revision provides should be allocated only to recipients that are TR SO_2 Group 2 units as of January 1 of such control period.

(2) Except as provided in paragraph (c)(3) or (4) of this section, the Administrator will not record such TR SO_2 Group 2 allowances under § 97.721.

(3) If the Administrator already recorded such TR SO_2 Group 2 allowances under § 97.721 and if the Administrator makes the determination under paragraph (c)(1) of this section before making deductions for the source that includes such recipient under § 97.724(b) for such control period, then the Administrator will deduct from the account in which such TR SO_2 Group 2 allowances were recorded an amount of TR SO_2 Group 2 allowances allocated for the same or a prior control period equal to the amount of such already recorded TR SO_2 Group 2 allowances. The authorized account representative shall ensure that there are sufficient TR SO_2 Group 2 allowances in such account for completion of the deduction.

(4) If the Administrator already recorded such TR SO_2 Group 2 allowances under § 97.721 and if the Administrator makes the determination under paragraph (c)(1) of this section after making deductions for the source that includes such recipient under § 97.724(b) for such control period, then the Administrator will not make any deduction to take account of such already recorded TR SO_2 Group 2 allowances.

(5)(i) With regard to the TR SO_2 Group 2 allowances that are not recorded, or that are deducted as an incorrect allocation, in accordance with paragraphs (c)(2) and (3) of this section for a recipient under paragraph (c)(1)(i) of this section, the Administrator will:

(A) Transfer such TR SO_2 Group 2 allowances to the new unit set-aside for such control period for the State from whose SO_2 Group 2 trading budget the TR SO_2 Group 2 allowances were allocated; or

(B) If the State has a SIP revision approved under § 52.39(h) or (i) covering such control period, include such TR SO_2 Group 2 allowances in the portion of the State SO_2 Group 2 trading budget that may be allocated for such control period in accordance with such SIP revision.

(ii) With regard to the TR SO_2 Group 2 allowances that were not allocated from the Indian country new unit set-aside for such control period and that are not recorded, or that are deducted as an incorrect allocation, in accordance with paragraphs (c)(2) and (3) of this section for a recipient under paragraph (c)(1)(ii) of this paragraph, the Administrator will:

(A) Transfer such TR SO_2 Group 2 allowances to the new unit set-aside for such control period; or

(B) If the State has a SIP revision approved under § 52.39(h) or (i) covering such control period, include such TR SO_2 Group 2 allowances in the portion of the State SO_2 Group 2 trading budget that may be allocated for such control period in accordance with such SIP revision.

(iii) With regard to the TR SO_2 Group 2 allowances that were allocated from the Indian country new unit set-aside for such control period and that are not recorded, or that are deducted as an incorrect allocation, in accordance with paragraphs (c)(2) and (3) of this section for a recipient under paragraph (c)(1)(ii) of this paragraph, the Administrator will transfer such TR SO_2 Group 2 allowances to the Indian country new unit set-aside for such control period.

§ 97.712 TR SO_2 Group 2 allowance allocations to new units.

(a) For each control period in 2012 and thereafter and for the TR SO_2 Group 2 units in each State, the Administrator will allocate TR SO_2 Group 2 allowances to the TR SO_2 Group 2 units as follows:

(1) The TR SO_2 Group 2 allowances will be allocated to the following TR SO_2 Group 2 units, except as provided in paragraph (a)(10) of this section:

(i) TR SO_2 Group 2 units that are not allocated an amount of TR SO_2 Group 2 allowances in the notice of data availability issued under § 97.711(a)(1);

(ii) TR SO_2 Group 2 units whose allocation of an amount of TR SO_2 Group 2 allowances for such control period in the notice of data availability issued under § 97.711(a)(1) is covered by § 97.711(c)(2) or (3);

(iii) TR SO_2 Group 2 units that are allocated an amount of TR SO_2 Group 2 allowances for such control period in the notice of data availability issued under § 97.711(a)(1), which allocation is terminated for such control period pursuant to § 97.711(a)(2), and that operate during the control period

immediately preceding such control period; or

(iv) For purposes of paragraph (a)(9) of this section, TR SO_2 Group 2 units under § 97.711(c)(1)(ii) whose allocation of an amount of TR SO_2 Group 2 allowances for such control period in the notice of data availability issued under § 97.711(b)(1)(ii)(B) is covered by § 97.711(c)(2) or (3).

(2) The Administrator will establish a separate new unit set-aside for the State for each such control period. Each such new unit set-aside will be allocated TR SO_2 Group 2 allowances in an amount equal to the applicable amount of tons of SO_2 emissions as set forth in § 97.710(a) and will be allocated additional TR SO_2 Group 2 allowances (if any) in accordance with §§ 97.711(a)(2) and (c)(5) and paragraph (b)(10) of this section.

(3) The Administrator will determine, for each TR SO_2 Group 2 unit described in paragraph (a)(1) of this section, an allocation of TR SO_2 Group 2 allowances for the later of the following control periods and for each subsequent control period:

(i) The control period in 2012;

(ii) The first control period after the control period in which the TR SO_2 Group 2 unit commences commercial operation;

(iii) For a unit described in paragraph (a)(1)(ii) of this section, the first control period in which the TR SO_2 Group 2 unit operates in the State after operating in another jurisdiction and for which the unit is not already allocated one or more TR SO_2 Group 2 allowances; and

(iv) For a unit described in paragraph (a)(1)(iii) of this section, the first control period after the control period in which the unit resumes operation.

(4)(i) The allocation to each TR SO_2 annual unit described in paragraph (a)(1)(i) through (iii) of this section and for each control period described in paragraph (a)(3) of this section will be an amount equal to the unit's total tons of SO_2 emissions during the immediately preceding control period.

(ii) The Administrator will adjust the allocation amount in paragraph (a)(4)(i) in accordance with paragraphs (a)(5) through (7) and (12) of this section.

(5) The Administrator will calculate the sum of the TR SO_2 Group 2 allowances determined for all such TR SO_2 Group 2 units under paragraph (a)(4)(i) of this section in the State for such control period.

(6) If the amount of TR SO_2 Group 2 allowances in the new unit set-aside for the State for such control period is greater than or equal to the sum under paragraph (a)(5) of this section, then the Administrator will allocate the amount of TR SO_2 Group 2 allowances determined for each such TR SO_2 Group 2 unit under paragraph (a)(4)(i) of this section.

(7) If the amount of TR SO_2 Group 2 allowances in the new unit set-aside for the State for such control period is less than the sum under paragraph (a)(5) of this section, then the Administrator will allocate to each such TR SO_2 Group 2 unit the amount of the TR SO_2 Group 2 allowances determined under paragraph (a)(4)(i) of this section for the unit, multiplied by the amount of TR SO_2 Group 2 allowances in the new unit set-aside for such control period, divided by the sum under paragraph (a)(5) of this section, and rounded to the nearest allowance.

(8) The Administrator will notify the public, through the promulgation of the notices of data availability described in § 97.711(b)(1)(i) and (ii), of the amount of TR SO_2 Group 2 allowances allocated under paragraphs (a)(2) through (7) and (12) of this section for such control period to each TR SO_2 Group 2 unit eligible for such allocation.

(9) If, after completion of the procedures under paragraphs (a)(5) through (8) of this section for such control period, any unallocated TR SO_2 Group 2 allowances remain in the new unit set-aside for the State for such control period, the Administrator will allocate such TR SO_2 Group 2 allowances as follows—

(i) The Administrator will determine, for each unit described in paragraph (a)(1) of this section that commenced commercial operation during the period starting January 1 of the year before the year of such control period and ending November 30 of year of such control period, the positive difference (if any) between the unit's emissions during such control period and the amount of TR SO_2 Group 2 allowances referenced in the notice of data availability required under § 97.711(b)(1)(ii) for the unit for such control period;

(ii) The Administrator will determine the sum of the positive differences determined under paragraph (a)(9)(i) of this section;

(iii) If the amount of unallocated TR SO_2 Group 2 allowances remaining in the new unit set-aside for the State for such control period is greater than or equal to the sum determined under paragraph (a)(9)(ii) of this section, then the Administrator will allocate the amount of TR SO_2 Group 2 allowances determined for each such TR SO_2 Group 2 unit under paragraph (a)(9)(i) of this section; and

(iv) If the amount of unallocated TR SO_2 Group 2 allowances remaining in the new unit set-aside for the State for such control period is less than the sum under paragraph (a)(9)(ii) of this section, then the Administrator will allocate to each such TR SO_2 Group 2 unit the amount of the TR SO_2 Group 2 allowances determined under paragraph (a)(9)(i) of this section for the unit, multiplied by the amount of unallocated TR SO_2 Group 2 allowances remaining in the new unit set-aside for such control period, divided by the sum under paragraph (a)(9)(ii) of this section, and rounded to the nearest allowance.

(10) If, after completion of the procedures under paragraphs (a)(9) and (12) of this section for such control period, any unallocated TR SO_2 Group 2 allowances remain in the new unit set-aside for the State for such control period, the Administrator will allocate to each TR SO_2 Group 2 unit that is in the State, is allocated an amount of TR SO_2 Group 2 allowances in the notice of data availability issued under § 97.711(a)(1), and continues to be allocated TR SO_2 Group 2 allowances for such control period in accordance with § 97.711(a)(2), an amount of TR SO_2 Group 2 allowances equal to the following: The total amount of such remaining unallocated TR SO_2 Group 2 allowances in such new unit set-aside, multiplied by the unit's allocation under § 97.711(a) for such control period, divided by the remainder of the amount of tons in the applicable State SO_2 Group 2 trading budget minus the sum of the amounts of tons in such new unit set-aside and the Indian country new unit set-aside for the State for such control period, and rounded to the nearest allowance.

(11) The Administrator will notify the public, through the promulgation of the notices of data availability described in § 97.711(b)(1)(iii), (iv), and (v), of the amount of TR SO_2 Group 2 allowances allocated under paragraphs (a)(9), (10), and (12) of this section for such control period to each TR SO_2 Group 2 unit eligible for such allocation.

(12)(i) Notwithstanding the requirements of paragraphs (a)(2) through (11) of this section, if the calculations of allocations of a new unit set-aside for a control period in a given year under paragraph (a)(7) of this section, paragraphs (a)(6) and (9)(iv) of this section, or paragraphs (a)(6), (9)(iii), and (10) of this section would otherwise result in total allocations of such new unit set-aside exceeding the total amount of such new unit set-aside, then the Administrator will adjust the results of the calculations under paragraph (a)(7), (9)(iv), or (10) of this section, as applicable, as follows. The Administrator will list the TR SO_2 Group 2 units in descending order based

on the amount of such units' allocations under paragraph (a)(7), (9)(iv), or (10) of this section, as applicable, and, in cases of equal allocation amounts, in alphabetical order of the relevant source's name and numerical order of the relevant unit's identification number, and will reduce each unit's allocation under paragraph (a)(7), (9)(iv), or (10) of this section, as applicable, by one TR SO_2 Group 2 allowance (but not below zero) in the order in which the units are listed and will repeat this reduction process as necessary, until the total allocations of such new unit set-aside equal the total amount of such new unit set-aside.

(ii) Notwithstanding the requirements of paragraphs (a)(10) and (11) of this section, if the calculations of allocations of a new unit set-aside for a control period in a given year under paragraphs (a)(6), (9)(iii), and (10) of this section would otherwise result in a total allocations of such new unit set-aside less than the total amount of such new unit set-aside, then the Administrator will adjust the results of the calculations under paragraph (a)(10) of this section, as follows. The Administrator will list the TR SO_2 Group 2 units in descending order based on the amount of such units' allocations under paragraph (a)(10) of this section and, in cases of equal allocation amounts, in alphabetical order of the relevant source's name and numerical order of the relevant unit's identification number, and will increase each unit's allocation under paragraph (a)(10) of this section by one TR SO_2 Group 2 allowance in the order in which the units are listed and will repeat this increase process as necessary, until the total allocations of such new unit set-aside equal the total amount of such new unit set-aside.

(b) For each control period in 2012 and thereafter and for the TR SO_2 Group 2 units located in Indian country within the borders of each State, the Administrator will allocate TR SO_2 Group 2 allowances to the TR SO_2 Group 2 units as follows:

(1) The TR SO_2 Group 2 allowances will be allocated to the following TR SO_2 Group 2 units, except as provided in paragraph (b)(10) of this section:

(i) TR SO_2 Group 2 units that are not allocated an amount of TR SO_2 Group 2 allowances in the notice of data availability issued under § 97.711(a)(1); or

(ii) For purposes of paragraph (b)(9) of this section, TR SO_2 Group 2 units under § 97.711(c)(1)(ii) whose allocation of an amount of TR SO_2 Group 2 allowances for such control period in the notice of data availability issued under § 97.711(b)(2)(ii)(B) is covered by § 97.711(c)(2) or (3).

(2) The Administrator will establish a separate Indian country new unit set-aside for the State for each such control period. Each such Indian country new unit set-aside will be allocated TR SO_2 Group 2 allowances in an amount equal to the applicable amount of tons of SO_2 emissions as set forth in § 97.710(a) and will be allocated additional TR SO_2 Group 2 allowances (if any) in accordance with § 97.711(c)(5).

(3) The Administrator will determine, for each TR SO_2 Group 2 unit described in paragraph (b)(1) of this section, an allocation of TR SO_2 Group 2 allowances for the later of the following control periods and for each subsequent control period:

(i) The control period in 2012; and

(ii) The first control period after the control period in which the TR SO_2 Group 2 unit commences commercial operation.

(4)(i) The allocation to each TR SO_2 annual unit described in paragraph (b)(1)(i) of this section and for each control period described in paragraph (b)(3) of this section will be an amount equal to the unit's total tons of SO_2 emissions during the immediately preceding control period.

(ii) The Administrator will adjust the allocation amount in paragraph (b)(4)(i) in accordance with paragraphs (b)(5) through (7) and (12) of this section.

(5) The Administrator will calculate the sum of the TR SO_2 Group 2 allowances determined for all such TR SO_2 Group 2 units under paragraph (b)(4)(i) of this section in Indian country within the borders of the State for such control period.

(6) If the amount of TR SO_2 Group 2 allowances in the Indian country new unit set-aside for the State for such control period is greater than or equal to the sum under paragraph (b)(5) of this section, then the Administrator will allocate the amount of TR SO_2 Group 2 allowances determined for each such TR SO_2 Group 2 unit under paragraph (b)(4)(i) of this section.

(7) If the amount of TR SO_2 Group 2 allowances in the Indian country new unit set-aside for the State for such control period is less than the sum under paragraph (b)(5) of this section, then the Administrator will allocate to each such TR SO_2 Group 2 unit the amount of the TR SO_2 Group 2 allowances determined under paragraph (b)(4)(i) of this section for the unit, multiplied by the amount of TR SO_2 Group 2 allowances in the Indian country new unit set-aside for such control period, divided by the sum under paragraph (b)(5) of this section, and rounded to the nearest allowance.

(8) The Administrator will notify the public, through the promulgation of the notices of data availability described in § 97.711(b)(2)(i) and (ii), of the amount of TR SO_2 Group 2 allowances allocated under paragraphs (b)(2) through (7) and (12) of this section for such control period to each TR SO_2 Group 2 unit eligible for such allocation.

(9) If, after completion of the procedures under paragraphs (b)(5) through (8) of this section for such control period, any unallocated TR SO_2 Group 2 allowances remain in the Indian country new unit set-aside for the State for such control period, the Administrator will allocate such TR SO_2 Group 2 allowances as follows—

(i) The Administrator will determine, for each unit described in paragraph (b)(1) of this section that commenced commercial operation during the period starting January 1 of the year before the year of such control period and ending November 30 of year of such control period, the positive difference (if any) between the unit's emissions during such control period and the amount of TR SO_2 Group 2 allowances referenced in the notice of data availability required under § 97.711(b)(2)(ii) for the unit for such control period;

(ii) The Administrator will determine the sum of the positive differences determined under paragraph (b)(9)(i) of this section;

(iii) If the amount of unallocated TR SO_2 Group 2 allowances remaining in the Indian country new unit set-aside for the State for such control period is greater than or equal to the sum determined under paragraph (b)(9)(ii) of this section, then the Administrator will allocate the amount of TR SO_2 Group 2 allowances determined for each such TR SO_2 Group 2 unit under paragraph (b)(9)(i) of this section; and

(iv) If the amount of unallocated TR SO_2 Group 2 allowances remaining in the Indian country new unit set-aside for the State for such control period is less than the sum under paragraph (b)(9)(ii) of this section, then the Administrator will allocate to each such TR SO_2 Group 2 unit the amount of the TR SO_2 Group 2 allowances determined under paragraph (b)(9)(i) of this section for the unit, multiplied by the amount of unallocated TR SO_2 Group 2 allowances remaining in the Indian country new unit set-aside for such control period, divided by the sum under paragraph (b)(9)(ii) of this section, and rounded to the nearest allowance.

(10) If, after completion of the procedures under paragraphs (b)(9) and (12) of this section for such control

period, any unallocated TR SO_2 Group 2 allowances remain in the Indian country new unit set-aside for the State for such control period, the Administrator will:

(i) Transfer such unallocated TR SO_2 Group 2 allowances to the new unit set-aside for the State for such control period; or

(ii) If the State has a SIP revision approved under § 52.39(g), (h), or (i) of this chapter covering such control period, include such unallocated TR SO_2 Group 2 allowances in the portion of the State SO_2 Group 2 trading budget that may be allocated for such control period in accordance with such SIP revision.

(11) The Administrator will notify the public, through the promulgation of the notices of data availability described in § 97.711(b)(2)(iii), (iv), and (v), of the amount of TR SO_2 Group 2 allowances allocated under paragraphs (b)(9), (10), and (12) of this section for such control period to each TR SO_2 Group 2 unit eligible for such allocation.

(12)(i) Notwithstanding the requirements of paragraphs (b)(2) through (11) of this section, if the calculations of allocations of an Indian country new unit set-aside for a control period in a given year under paragraph (b)(7) of this section, paragraphs (b)(6) and (9)(iv) of this section, or paragraphs (b)(6), (9)(iii), and (10) of this section would otherwise result in total allocations of such Indian country new unit set-aside exceeding the total amount of such Indian country new unit set-aside, then the Administrator will adjust the results of the calculations under paragraph (b)(7), (9)(iv), or (10) of this section, as applicable, as follows. The Administrator will list the TR SO_2 Group 2 units in descending order based on the amount of such units' allocations under paragraph (b)(7), (9)(iv), or (10) of this section, as applicable, and, in cases of equal allocation amounts, in alphabetical order of the relevant source's name and numerical order of the relevant unit's identification number, and will reduce each unit's allocation under paragraph (b)(7), (9)(iv), or (10) of this section, as applicable, by one TR SO_2 Group 2 allowance (but not below zero) in the order in which the units are listed and will repeat this reduction process as necessary, until the total allocations of such Indian country new unit set-aside equal the total amount of such Indian country new unit set-aside.

(ii) Notwithstanding the requirements of paragraphs (b)(10) and (11) of this section, if the calculations of allocations of an Indian country new unit set-aside for a control period in a given year under paragraphs (b)(6), (9)(iii), and (10) of this section would otherwise result in a total allocations of such Indian country new unit set-aside less than the total amount of such Indian country new unit set-aside, then the Administrator will adjust the results of the calculations under paragraph (b)(10) of this section, as follows. The Administrator will list the TR SO_2 Group 2 units in descending order based on the amount of such units' allocations under paragraph (b)(10) of this section and, in cases of equal allocation amounts, in alphabetical order of the relevant source's name and numerical order of the relevant unit's identification number, and will increase each unit's allocation under paragraph (b)(10) of this section by one TR SO_2 Group 2 allowance in the order in which the units are listed and will repeat this increase process as necessary, until the total allocations of such Indian country new unit set-aside equal the total amount of such Indian country new unit set-aside.

§ 97.713 Authorization of designated representative and alternate designated representative.

(a) Except as provided under § 97.715, each TR SO_2 Group 2 source, including all TR SO_2 Group 2 units at the source, shall have one and only one designated representative, with regard to all matters under the TR SO_2 Group 2 Trading Program.

(1) The designated representative shall be selected by an agreement binding on the owners and operators of the source and all TR SO_2 Group 2 units at the source and shall act in accordance with the certification statement in § 97.716(a)(4)(iii).

(2) Upon and after receipt by the Administrator of a complete certificate of representation under § 97.716:

(i) The designated representative shall be authorized and shall represent and, by his or her representations, actions, inactions, or submissions, legally bind each owner and operator of the source and each TR SO_2 Group 2 unit at the source in all matters pertaining to the TR SO_2 Group 2 Trading Program, notwithstanding any agreement between the designated representative and such owners and operators; and

(ii) The owners and operators of the source and each TR SO_2 Group 2 unit at the source shall be bound by any decision or order issued to the designated representative by the Administrator regarding the source or any such unit.

(b) Except as provided under § 97.715, each TR SO_2 Group 2 source may have one and only one alternate designated representative, who may act on behalf of the designated representative. The agreement by which the alternate designated representative is selected shall include a procedure for authorizing the alternate designated representative to act in lieu of the designated representative.

(1) The alternate designated representative shall be selected by an agreement binding on the owners and operators of the source and all TR SO_2 Group 2 units at the source and shall act in accordance with the certification statement in § 97.716(a)(4)(iii).

(2) Upon and after receipt by the Administrator of a complete certificate of representation under § 97.716,

(i) The alternate designated representative shall be authorized;

(ii) Any representation, action, inaction, or submission by the alternate designated representative shall be deemed to be a representation, action, inaction, or submission by the designated representative; and

(iii) The owners and operators of the source and each TR SO_2 Group 2 unit at the source shall be bound by any decision or order issued to the alternate designated representative by the Administrator regarding the source or any such unit.

(c) Except in this section, § 97.702, and §§ 97.714 through 97.718, whenever the term ''designated representative'' (as distinguished from the term ''common designated representative'') is used in this subpart, the term shall be construed to include the designated representative or any alternate designated representative.

§ 97.714 Responsibilities of designated representative and alternate designated representative.

(a) Except as provided under § 97.718 concerning delegation of authority to make submissions, each submission under the TR SO_2 Group 2 Trading Program shall be made, signed, and certified by the designated representative or alternate designated representative for each TR SO_2 Group 2 source and TR SO_2 Group 2 unit for which the submission is made. Each such submission shall include the following certification statement by the designated representative or alternate designated representative: ''I am authorized to make this submission on behalf of the owners and operators of the source or units for which the submission is made. I certify under penalty of law that I have personally examined, and am familiar with, the statements and information submitted in this document and all its attachments. Based on my inquiry of

those individuals with primary responsibility for obtaining the information, I certify that the statements and information are to the best of my knowledge and belief true, accurate, and complete. I am aware that there are significant penalties for submitting false statements and information or omitting required statements and information, including the possibility of fine or imprisonment.''

(b) The Administrator will accept or act on a submission made for a TR SO_2 Group 2 source or a TR SO_2 Group 2 unit only if the submission has been made, signed, and certified in accordance with paragraph (a) of this section and § 97.718.

§ 97.715 Changing designated representative and alternate designated representative; changes in owners and operators; changes in units at the source.

(a) *Changing designated representative.* The designated representative may be changed at any time upon receipt by the Administrator of a superseding complete certificate of representation under § 97.716. Notwithstanding any such change, all representations, actions, inactions, and submissions by the previous designated representative before the time and date when the Administrator receives the superseding certificate of representation shall be binding on the new designated representative and the owners and operators of the TR SO_2 Group 2 source and the TR SO_2 Group 2 units at the source.

(b) *Changing alternate designated representative.* The alternate designated representative may be changed at any time upon receipt by the Administrator of a superseding complete certificate of representation under § 97.716. Notwithstanding any such change, all representations, actions, inactions, and submissions by the previous alternate designated representative before the time and date when the Administrator receives the superseding certificate of representation shall be binding on the new alternate designated representative, the designated representative, and the owners and operators of the TR SO_2 Group 2 source and the TR SO_2 Group 2 units at the source.

(c) *Changes in owners and operators.* (1) In the event an owner or operator of a TR SO_2 Group 2 source or a TR SO_2 Group 2 unit at the source is not included in the list of owners and operators in the certificate of representation under § 97.716, such owner or operator shall be deemed to be subject to and bound by the certificate of representation, the representations, actions, inactions, and submissions of the designated representative and any alternate designated representative of the source or unit, and the decisions and orders of the Administrator, as if the owner or operator were included in such list.

(2) Within 30 days after any change in the owners and operators of a TR SO_2 Group 2 source or a TR SO_2 Group 2 unit at the source, including the addition or removal of an owner or operator, the designated representative or any alternate designated representative shall submit a revision to the certificate of representation under § 97.716 amending the list of owners and operators to reflect the change.

(d) *Changes in units at the source.* Within 30 days of any change in which units are located at a TR SO_2 Group 2 source (including the addition or removal of a unit), the designated representative or any alternate designated representative shall submit a certificate of representation under § 97.716 amending the list of units to reflect the change.

(1) If the change is the addition of a unit that operated (other than for purposes of testing by the manufacturer before initial installation) before being located at the source, then the certificate of representation shall identify, in a format prescribed by the Administrator, the entity from whom the unit was purchased or otherwise obtained (including name, address, telephone number, and facsimile number (if any)), the date on which the unit was purchased or otherwise obtained, and the date on which the unit became located at the source.

(2) If the change is the removal of a unit, then the certificate of representation shall identify, in a format prescribed by the Administrator, the entity to which the unit was sold or that otherwise obtained the unit (including name, address, telephone number, and facsimile number (if any)), the date on which the unit was sold or otherwise obtained, and the date on which the unit became no longer located at the source.

§ 97.716 Certificate of representation.

(a) A complete certificate of representation for a designated representative or an alternate designated representative shall include the following elements in a format prescribed by the Administrator:

(1) Identification of the TR SO_2 Group 2 source, and each TR SO_2 Group 2 unit at the source, for which the certificate of representation is submitted, including source name, source category and NAICS code (or, in the absence of a NAICS code, an equivalent code), State, plant code, county, latitude and longitude, unit identification number and type, identification number and nameplate capacity (in MWe, rounded to the nearest tenth) of each generator served by each such unit, actual or projected date of commencement of commercial operation, and a statement of whether such source is located in Indian Country. If a projected date of commencement of commercial operation is provided, the actual date of commencement of commercial operation shall be provided when such information becomes available.

(2) The name, address, e-mail address (if any), telephone number, and facsimile transmission number (if any) of the designated representative and any alternate designated representative.

(3) A list of the owners and operators of the TR SO_2 Group 2 source and of each TR SO_2 Group 2 unit at the source.

(4) The following certification statements by the designated representative and any alternate designated representative—

(i) ''I certify that I was selected as the designated representative or alternate designated representative, as applicable, by an agreement binding on the owners and operators of the source and each TR SO_2 Group 2 unit at the source.''

(ii) ''I certify that I have all the necessary authority to carry out my duties and responsibilities under the TR SO_2 Group 2 Trading Program on behalf of the owners and operators of the source and of each TR SO_2 Group 2 unit at the source and that each such owner and operator shall be fully bound by my representations, actions, inactions, or submissions and by any decision or order issued to me by the Administrator regarding the source or unit.''

(iii) ''Where there are multiple holders of a legal or equitable title to, or a leasehold interest in, a TR SO_2 Group 2 unit, or where a utility or industrial customer purchases power from a TR SO_2 Group 2 unit under a life-of-the-unit, firm power contractual arrangement, I certify that: I have given a written notice of my selection as the 'designated representative' or 'alternate designated representative', as applicable, and of the agreement by which I was selected to each owner and operator of the source and of each TR SO_2 Group 2 unit at the source; and TR SO_2 Group 2 allowances and proceeds of transactions involving TR SO_2 Group 2 allowances will be deemed to be held or distributed in proportion to each holder's legal, equitable, leasehold, or contractual reservation or entitlement, except that, if such multiple holders have expressly provided for a different distribution of TR SO_2 Group 2

allowances by contract, TR SO_2 Group 2 allowances and proceeds of transactions involving TR SO_2 Group 2 allowances will be deemed to be held or distributed in accordance with the contract.''

(5) The signature of the designated representative and any alternate designated representative and the dates signed.

(b) Unless otherwise required by the Administrator, documents of agreement referred to in the certificate of representation shall not be submitted to the Administrator. The Administrator shall not be under any obligation to review or evaluate the sufficiency of such documents, if submitted.

§ 97.717 Objections concerning designated representative and alternate designated representative.

(a) Once a complete certificate of representation under § 97.716 has been submitted and received, the Administrator will rely on the certificate of representation unless and until a superseding complete certificate of representation under § 97.716 is received by the Administrator.

(b) Except as provided in paragraph (a) of this section, no objection or other communication submitted to the Administrator concerning the authorization, or any representation, action, inaction, or submission, of a designated representative or alternate designated representative shall affect any representation, action, inaction, or submission of the designated representative or alternate designated representative or the finality of any decision or order by the Administrator under the TR SO_2 Group 2 Trading Program.

(c) The Administrator will not adjudicate any private legal dispute concerning the authorization or any representation, action, inaction, or submission of any designated representative or alternate designated representative, including private legal disputes concerning the proceeds of TR SO_2 Group 2 allowance transfers.

§ 97.718 Delegation by designated representative and alternate designated representative.

(a) A designated representative may delegate, to one or more natural persons, his or her authority to make an electronic submission to the Administrator provided for or required under this subpart.

(b) An alternate designated representative may delegate, to one or more natural persons, his or her authority to make an electronic submission to the Administrator provided for or required under this subpart.

(c) In order to delegate authority to a natural person to make an electronic submission to the Administrator in accordance with paragraph (a) or (b) of this section, the designated representative or alternate designated representative, as appropriate, must submit to the Administrator a notice of delegation, in a format prescribed by the Administrator, that includes the following elements:

(1) The name, address, e-mail address, telephone number, and facsimile transmission number (if any) of such designated representative or alternate designated representative;

(2) The name, address, e-mail address, telephone number, and facsimile transmission number (if any) of each such natural person (referred to in this section as an ''agent'');

(3) For each such natural person, a list of the type or types of electronic submissions under paragraph (a) or (b) of this section for which authority is delegated to him or her; and

(4) The following certification statements by such designated representative or alternate designated representative:

(i) ''I agree that any electronic submission to the Administrator that is made by an agent identified in this notice of delegation and of a type listed for such agent in this notice of delegation and that is made when I am a designated representative or alternate designated representative, as appropriate, and before this notice of delegation is superseded by another notice of delegation under 40 CFR 97.718(d) shall be deemed to be an electronic submission by me.''

(ii) ''Until this notice of delegation is superseded by another notice of delegation under 40 CFR 97.718(d), I agree to maintain an e-mail account and to notify the Administrator immediately of any change in my e-mail address unless all delegation of authority by me under 40 CFR 97.718 is terminated.''.

(d) A notice of delegation submitted under paragraph (c) of this section shall be effective, with regard to the designated representative or alternate designated representative identified in such notice, upon receipt of such notice by the Administrator and until receipt by the Administrator of a superseding notice of delegation submitted by such designated representative or alternate designated representative, as appropriate. The superseding notice of delegation may replace any previously identified agent, add a new agent, or eliminate entirely any delegation of authority.

(e) Any electronic submission covered by the certification in paragraph (c)(4)(i) of this section and made in accordance with a notice of delegation effective under paragraph (d) of this section shall be deemed to be an electronic submission by the designated representative or alternate designated representative submitting such notice of delegation.

§ 97.719 [Reserved]

§ 97.720 Establishment of compliance accounts, assurance accounts, and general accounts.

(a) *Compliance accounts.* Upon receipt of a complete certificate of representation under § 97.716, the Administrator will establish a compliance account for the TR SO_2 Group 2 source for which the certificate of representation was submitted, unless the source already has a compliance account. The designated representative and any alternate designated representative of the source shall be the authorized account representative and the alternate authorized account representative respectively of the compliance account.

(b) *Assurance accounts.* The Administrator will establish assurance accounts for certain owners and operators and States in accordance with § 97.725(b)(3).

(c) *General accounts.* (1) Application for general account. (i) Any person may apply to open a general account, for the purpose of holding and transferring TR SO_2 Group 2 allowances, by submitting to the Administrator a complete application for a general account. Such application shall designate one and only one authorized account representative and may designate one and only one alternate authorized account representative who may act on behalf of the authorized account representative.

(A) The authorized account representative and alternate authorized account representative shall be selected by an agreement binding on the persons who have an ownership interest with respect to TR SO_2 Group 2 allowances held in the general account.

(B) The agreement by which the alternate authorized account representative is selected shall include a procedure for authorizing the alternate authorized account representative to act in lieu of the authorized account representative.

(ii) A complete application for a general account shall include the following elements in a format prescribed by the Administrator:

(A) Name, mailing address, e-mail address (if any), telephone number, and

facsimile transmission number (if any) of the authorized account representative and any alternate authorized account representative;

(B) An identifying name for the general account;

(C) A list of all persons subject to a binding agreement for the authorized account representative and any alternate authorized account representative to represent their ownership interest with respect to the TR SO_2 Group 2 allowances held in the general account;

(D) The following certification statement by the authorized account representative and any alternate authorized account representative: ''I certify that I was selected as the authorized account representative or the alternate authorized account representative, as applicable, by an agreement that is binding on all persons who have an ownership interest with respect to TR SO_2 Group 2 allowances held in the general account. I certify that I have all the necessary authority to carry out my duties and responsibilities under the TR SO_2 Group 2 Trading Program on behalf of such persons and that each such person shall be fully bound by my representations, actions, inactions, or submissions and by any decision or order issued to me by the Administrator regarding the general account.''

(E) The signature of the authorized account representative and any alternate authorized account representative and the dates signed.

(iii) Unless otherwise required by the Administrator, documents of agreement referred to in the application for a general account shall not be submitted to the Administrator. The Administrator shall not be under any obligation to review or evaluate the sufficiency of such documents, if submitted.

(2) Authorization of authorized account representative and alternate authorized account representative. (i) Upon receipt by the Administrator of a complete application for a general account under paragraph (b)(1) of this section, the Administrator will establish a general account for the person or persons for whom the application is submitted, and upon and after such receipt by the Administrator:

(A) The authorized account representative of the general account shall be authorized and shall represent and, by his or her representations, actions, inactions, or submissions, legally bind each person who has an ownership interest with respect to TR SO_2 Group 2 allowances held in the general account in all matters pertaining to the TR SO_2 Group 2 Trading Program, notwithstanding any agreement between the authorized account representative and such person.

(B) Any alternate authorized account representative shall be authorized, and any representation, action, inaction, or submission by any alternate authorized account representative shall be deemed to be a representation, action, inaction, or submission by the authorized account representative.

(C) Each person who has an ownership interest with respect to TR SO_2 Group 2 allowances held in the general account shall be bound by any decision or order issued to the authorized account representative or alternate authorized account representative by the Administrator regarding the general account.

(ii) Except as provided in paragraph (c)(5) of this section concerning delegation of authority to make submissions, each submission concerning the general account shall be made, signed, and certified by the authorized account representative or any alternate authorized account representative for the persons having an ownership interest with respect to TR SO_2 Group 2 allowances held in the general account. Each such submission shall include the following certification statement by the authorized account representative or any alternate authorized account representative: ''I am authorized to make this submission on behalf of the persons having an ownership interest with respect to the TR SO_2 Group 2 allowances held in the general account. I certify under penalty of law that I have personally examined, and am familiar with, the statements and information submitted in this document and all its attachments. Based on my inquiry of those individuals with primary responsibility for obtaining the information, I certify that the statements and information are to the best of my knowledge and belief true, accurate, and complete. I am aware that there are significant penalties for submitting false statements and information or omitting required statements and information, including the possibility of fine or imprisonment.''

(iii) Except in this section, whenever the term ''authorized account representative'' is used in this subpart, the term shall be construed to include the authorized account representative or any alternate authorized account representative.

(3) Changing authorized account representative and alternate authorized account representative; changes in persons with ownership interest. (i) The authorized account representative of a general account may be changed at any time upon receipt by the Administrator of a superseding complete application for a general account under paragraph (c)(1) of this section. Notwithstanding any such change, all representations, actions, inactions, and submissions by the previous authorized account representative before the time and date when the Administrator receives the superseding application for a general account shall be binding on the new authorized account representative and the persons with an ownership interest with respect to the TR SO_2 Group 2 allowances in the general account.

(ii) The alternate authorized account representative of a general account may be changed at any time upon receipt by the Administrator of a superseding complete application for a general account under paragraph (c)(1) of this section. Notwithstanding any such change, all representations, actions, inactions, and submissions by the previous alternate authorized account representative before the time and date when the Administrator receives the superseding application for a general account shall be binding on the new alternate authorized account representative, the authorized account representative, and the persons with an ownership interest with respect to the TR SO_2 Group 2 allowances in the general account.

(iii)(A) In the event a person having an ownership interest with respect to TR SO_2 Group 2 allowances in the general account is not included in the list of such persons in the application for a general account, such person shall be deemed to be subject to and bound by the application for a general account, the representation, actions, inactions, and submissions of the authorized account representative and any alternate authorized account representative of the account, and the decisions and orders of the Administrator, as if the person were included in such list.

(B) Within 30 days after any change in the persons having an ownership interest with respect to SO_2 Group 2 allowances in the general account, including the addition or removal of a person, the authorized account representative or any alternate authorized account representative shall submit a revision to the application for a general account amending the list of persons having an ownership interest with respect to the TR SO_2 Group 2 allowances in the general account to include the change.

(4) Objections concerning authorized account representative and alternate authorized account representative. (i) Once a complete application for a general account under paragraph (c)(1) of this section has been submitted and

received, the Administrator will rely on the application unless and until a superseding complete application for a general account under paragraph (b)(1) of this section is received by the Administrator.

(ii) Except as provided in paragraph (c)(4)(i) of this section, no objection or other communication submitted to the Administrator concerning the authorization, or any representation, action, inaction, or submission of the authorized account representative or any alternate authorized account representative of a general account shall affect any representation, action, inaction, or submission of the authorized account representative or any alternate authorized account representative or the finality of any decision or order by the Administrator under the TR SO_2 Group 2 Trading Program.

(iii) The Administrator will not adjudicate any private legal dispute concerning the authorization or any representation, action, inaction, or submission of the authorized account representative or any alternate authorized account representative of a general account, including private legal disputes concerning the proceeds of TR SO_2 Group 2 allowance transfers.

(5) Delegation by authorized account representative and alternate authorized account representative. (i) An authorized account representative of a general account may delegate, to one or more natural persons, his or her authority to make an electronic submission to the Administrator provided for or required under this subpart.

(ii) An alternate authorized account representative of a general account may delegate, to one or more natural persons, his or her authority to make an electronic submission to the Administrator provided for or required under this subpart.

(iii) In order to delegate authority to a natural person to make an electronic submission to the Administrator in accordance with paragraph (c)(5)(i) or (ii) of this section, the authorized account representative or alternate authorized account representative, as appropriate, must submit to the Administrator a notice of delegation, in a format prescribed by the Administrator, that includes the following elements:

(A) The name, address, e-mail address, telephone number, and facsimile transmission number (if any) of such authorized account representative or alternate authorized account representative;

(B) The name, address, e-mail address, telephone number, and facsimile transmission number (if any) of each such natural person (referred to in this section as an ''agent'');

(C) For each such natural person, a list of the type or types of electronic submissions under paragraph (c)(5)(i) or (ii) of this section for which authority is delegated to him or her;

(D) The following certification statement by such authorized account representative or alternate authorized account representative: ''I agree that any electronic submission to the Administrator that is made by an agent identified in this notice of delegation and of a type listed for such agent in this notice of delegation and that is made when I am an authorized account representative or alternate authorized representative, as appropriate, and before this notice of delegation is superseded by another notice of delegation under 40 CFR 97.720(c)(5)(iv) shall be deemed to be an electronic submission by me.''; and

(E) The following certification statement by such authorized account representative or alternate authorized account representative: ''Until this notice of delegation is superseded by another notice of delegation under 40 CFR 97.720(c)(5)(iv), I agree to maintain an e-mail account and to notify the Administrator immediately of any change in my e-mail address unless all delegation of authority by me under 40 CFR 97.720(c)(5) is terminated.''.

(iv) A notice of delegation submitted under paragraph (c)(5)(iii) of this section shall be effective, with regard to the authorized account representative or alternate authorized account representative identified in such notice, upon receipt of such notice by the Administrator and until receipt by the Administrator of a superseding notice of delegation submitted by such authorized account representative or alternate authorized account representative, as appropriate. The superseding notice of delegation may replace any previously identified agent, add a new agent, or eliminate entirely any delegation of authority.

(v) Any electronic submission covered by the certification in paragraph (c)(5)(iii)(D) of this section and made in accordance with a notice of delegation effective under paragraph (c)(5)(iv) of this section shall be deemed to be an electronic submission by the designated representative or alternate designated representative submitting such notice of delegation.

(6) Closing a general account. (i) The authorized account representative or alternate authorized account representative of a general account may submit to the Administrator a request to close the account. Such request shall include a correctly submitted TR SO_2 Group 2 allowance transfer under § 97.722 for any TR SO_2 Group 2 allowances in the account to one or more other Allowance Management System accounts.

(ii) If a general account has no TR SO_2 Group 2 allowance transfers to or from the account for a 12-month period or longer and does not contain any TR SO_2 Group 2 allowances, the Administrator may notify the authorized account representative for the account that the account will be closed after 30 days after the notice is sent. The account will be closed after the 30-day period unless, before the end of the 30-day period, the Administrator receives a correctly submitted TR SO_2 Group 2 allowance transfer under § 97.722 to the account or a statement submitted by the authorized account representative or alternate authorized account representative demonstrating to the satisfaction of the Administrator good cause as to why the account should not be closed.

(d) *Account identification.* The Administrator will assign a unique identifying number to each account established under paragraph (a), (b), or (c) of this section.

(e) *Responsibilities of authorized account representative and alternate authorized account representative.* After the establishment of a compliance account or general account, the Administrator will accept or act on a submission pertaining to the account, including, but not limited to, submissions concerning the deduction or transfer of TR SO_2 Group 2 allowances in the account, only if the submission has been made, signed, and certified in accordance with §§ 97.714(a) and 97.718 or paragraphs (c)(2)(ii) and (c)(5) of this section.

§ 97.721 Recordation of TR SO_2 Group 2 allowance allocations and auction results.

(a) By November 7, 2011, the Administrator will record in each TR SO_2 Group 2 source's compliance account the TR SO_2 Group 2 allowances allocated to the TR SO_2 Group 2 units at the source in accordance with § 97.711(a) for the control period in 2012.

(b) By November 7, 2011, the Administrator will record in each TR SO_2 Group 2 source's compliance account the TR SO_2 Group 2 allowances allocated to the TR SO_2 Group 2 units at the source in accordance with § 97.711(a) for the control period in 2013, unless the State in which the source is located notifies the

Administrator in writing by October 17, 2011 of the State's intent to submit to the Administrator a complete SIP revision by April 1, 2012 meeting the requirements of § 52.39(g)(1) through (4) of this chapter.

(1) If, by April 1, 2012, the State does not submit to the Administrator such complete SIP revision, the Administrator will record by April 15, 2012 in each TR SO_2 Group 2 source's compliance account the TR SO_2 Group 2 allowances allocated to the TR SO_2 Group 2 units at the source in accordance with § 97.711(a) for the control period in 2013.

(2) If the State submits to the Administrator by April 1, 2012, and the Administrator approves by October 1, 2012, such complete SIP revision, the Administrator will record by October 1, 2012 in each TR SO_2 Group 2 source's compliance account the TR SO_2 Group 2 allowances allocated to the TR SO_2 Group 2 units at the source as provided in such approved, complete SIP revision for the control period in 2013.

(3) If the State submits to the Administrator by April 1, 2012, and the Administrator does not approve by October 1, 2012, such complete SIP revision, the Administrator will record by October 1, 2012 in each TR SO_2 Group 2 source's compliance account the TR SO_2 Group 2 allowances allocated to the TR SO_2 Group 2 units at the source in accordance with § 97.711(a) for the control period in 2013.

(c) By July 1, 2013, the Administrator will record in each TR SO_2 Group 2 source's compliance account the TR SO_2 Group 2 allowances allocated to the TR SO_2 Group 2 units at the source, or in each appropriate Allowance Management System account the TR SO_2 Group 2 allowances auctioned to TR SO_2 Group 2 units, in accordance with § 97.711(a), or with a SIP revision approved under § 52.39(h) or (i) of this chapter, for the control period in 2014 and 2015.

(d) By July 1, 2014, the Administrator will record in each TR SO_2 Group 2 source's compliance account the TR SO_2 Group 2 allowances allocated to the TR SO_2 Group 2 units at the source, or in each appropriate Allowance Management System account the TR SO_2 Group 2 allowances auctioned to TR SO_2 Group 2 units, in accordance with § 97.711(a), or with a SIP revision approved under § 52.39(h) or (i) of this chapter, for the control period in 2016 and 2017.

(e) By July 1, 2015, the Administrator will record in each TR SO_2 Group 2 source's compliance account the TR SO_2 Group 2 allowances allocated to the TR SO_2 Group 2 units at the source, or in each appropriate Allowance Management System account the TR SO_2 Group 2 allowances auctioned to TR SO_2 Group 2 units, in accordance with § 97.711(a), or with a SIP revision approved under § 52.39(h) or (i) of this chapter, for the control period in 2018 and 2019.

(f) By July 1, 2016 and July 1 of each year thereafter, the Administrator will record in each TR SO_2 Group 2 source's compliance account the TR SO_2 Group 2 allowances allocated to the TR SO_2 Group 2 units at the source, or in each appropriate Allowance Management System account the TR SO_2 Group 2 allowances auctioned to TR SO_2 Group 2 units, in accordance with § 97.711(a), or with a SIP revision approved under § 52.39(h) and (i) of this chapter, for the control period in the fourth year after the year of the applicable recordation deadline under this paragraph.

(g) By August 1, 2012 and August 1 of each year thereafter, the Administrator will record in each TR SO_2 Group 2 source's compliance account the TR SO_2 Group 2 allowances allocated to the TR SO_2 Group 2 units at the source, or in each appropriate Allowance Management System account the TR SO_2 Group 2 allowances auctioned to TR SO_2 Group 2 units, in accordance with § 97.712(a)(2) through (8) and (12), or with a SIP revision approved under § 52.39(h) and (i) of this chapter, for the control period in the year of the applicable recordation deadline under this paragraph.

(h) By August 1, 2012 and August 1 of each year thereafter, the Administrator will record in each TR SO_2 Group 2 source's compliance account the TR SO_2 Group 2 allowances allocated to the TR SO_2 Group 2 units at the source in accordance with § 97.712(b)(2) through (8) and (12) for the control period in the year of the applicable recordation deadline under this paragraph.

(i) By February 15, 2013 and February 15 of each year thereafter, the Administrator will record in each TR SO_2 Group 2 source's compliance account the TR SO_2 Group 2 allowances allocated to the TR SO_2 Group 2 units at the source in accordance with § 97.712(a)(9) through (12), for the control period in the year before the year of the applicable recordation deadline under this paragraph.

(j) By the date on which any allocation or auction results, other than an allocation or auction results, described in paragraphs (a) through (i) of this section, of TR SO_2 Group 2 allowances to a recipient is made by or are submitted to the Administrator in accordance with § 97.711 or § 97.712 or with a SIP revision approved under § 52.39(h) or (i) of this chapter, the Administrator will record such allocation or auction results in the appropriate Allowance Management System account.

(k) When recording the allocation or auction of TR SO_2 Group 2 allowances to a TR SO_2 Group 2 unit or other entity in an Allowance Management System account, the Administrator will assign each TR SO_2 Group 2 allowance a unique identification number that will include digits identifying the year of the control period for which the TR SO_2 Group 2 allowance is allocated or auctioned.

§ 97.722 Submission of TR SO_2 Group 2 allowance transfers.

(a) An authorized account representative seeking recordation of a TR SO_2 Group 2 allowance transfer shall submit the transfer to the Administrator.

(b) A TR SO_2 Group 2 allowance transfer shall be correctly submitted if:

(1) The transfer includes the following elements, in a format prescribed by the Administrator:

(i) The account numbers established by the Administrator for both the transferor and transferee accounts;

(ii) The serial number of each TR SO_2 Group 2 allowance that is in the transferor account and is to be transferred; and

(iii) The name and signature of the authorized account representative of the transferor account and the date signed; and

(2) When the Administrator attempts to record the transfer, the transferor account includes each TR SO_2 Group 2 allowance identified by serial number in the transfer.

§ 97.723 Recordation of TR SO_2 Group 2 allowance transfers.

(a) Within 5 business days (except as provided in paragraph (b) of this section) of receiving a TR SO_2 Group 2 allowance transfer that is correctly submitted under § 97.722, the Administrator will record a TR SO_2 Group 2 allowance transfer by moving each TR SO_2 Group 2 allowance from the transferor account to the transferee account as specified in the transfer.

(b) A TR SO_2 Group 2 allowance transfer to or from a compliance account that is submitted for recordation after the allowance transfer deadline for a control period and that includes any TR SO_2 Group 2 allowances allocated for any control period before such allowance transfer deadline will not be recorded until after the Administrator completes the deductions from such

compliance account under § 97.724 for the control period immediately before such allowance transfer deadline.

(c) Where a TR SO_2 Group 2 allowance transfer is not correctly submitted under § 97.722, the Administrator will not record such transfer.

(d) Within 5 business days of recordation of a TR SO_2 Group 2 allowance transfer under paragraphs (a) and (b) of the section, the Administrator will notify the authorized account representatives of both the transferor and transferee accounts.

(e) Within 10 business days of receipt of a TR SO_2 Group 2 allowance transfer that is not correctly submitted under § 97.722, the Administrator will notify the authorized account representatives of both accounts subject to the transfer of:

(1) A decision not to record the transfer, and

(2) The reasons for such non-recordation.

§ 97.724 Compliance with TR SO_2 Group 2 emissions limitation.

(a) *Availability for deduction for compliance.* TR SO_2 Group 2 allowances are available to be deducted for compliance with a source's TR SO_2 Group 2 emissions limitation for a control period in a given year only if the TR SO_2 Group 2 allowances:

(1) Were allocated for such control period or a control period in a prior year; and

(2) Are held in the source's compliance account as of the allowance transfer deadline for such control period.

(b) *Deductions for compliance.* After the recordation, in accordance with § 97.723, of TR SO_2 Group 2 allowance transfers submitted by the allowance transfer deadline for a control period in a given year, the Administrator will deduct from each source's compliance account TR SO_2 Group 2 allowances available under paragraph (a) of this section in order to determine whether the source meets the TR SO_2 Group 2 emissions limitation for such control period, as follows:

(1) Until the amount of TR SO_2 Group 2 allowances deducted equals the number of tons of total SO_2 emissions from all TR SO_2 Group 2 units at the source for such control period; or

(2) If there are insufficient TR SO_2 Group 2 allowances to complete the deductions in paragraph (b)(1) of this section, until no more TR SO_2 Group 2 allowances available under paragraph (a) of this section remain in the compliance account.

(c)(1) *Identification of TR SO_2 Group 2 allowances by serial number.* The authorized account representative for a source's compliance account may request that specific TR SO_2 Group 2 allowances, identified by serial number, in the compliance account be deducted for emissions or excess emissions for a control period in a given year in accordance with paragraph (b) or (d) of this section. In order to be complete, such request shall be submitted to the Administrator by the allowance transfer deadline for such control period and include, in a format prescribed by the Administrator, the identification of the TR SO_2 Group 2 source and the appropriate serial numbers.

(2) *First-in, first-out.* The Administrator will deduct TR SO_2 Group 2 allowances under paragraph (b) or (d) of this section from the source's compliance account in accordance with a complete request under paragraph (c)(1) of this section or, in the absence of such request or in the case of identification of an insufficient amount of TR SO_2 Group 2 allowances in such request, on a first-in, first-out accounting basis in the following order:

(i) Any TR SO_2 Group 2 allowances that were allocated to the units at the source and not transferred out of the compliance account, in the order of recordation; and then

(ii) Any TR SO_2 Group 2 allowances that were allocated to any unit and transferred to and recorded in the compliance account pursuant to this subpart, in the order of recordation.

(d) *Deductions for excess emissions.* After making the deductions for compliance under paragraph (b) of this section for a control period in a year in which the TR SO_2 Group 2 source has excess emissions, the Administrator will deduct from the source's compliance account an amount of TR SO_2 Group 2 allowances, allocated for a control period in a prior year or the control period in the year of the excess emissions or in the immediately following year, equal to two times the number of tons of the source's excess emissions.

(e) *Recordation of deductions.* The Administrator will record in the appropriate compliance account all deductions from such an account under paragraphs (b) and (d) of this section.

§ 97.725 Compliance with TR SO_2 Group 2 assurance provisions.

(a) *Availability for deduction.* TR SO_2 Group 2 allowances are available to be deducted for compliance with the TR SO_2 Group 2 assurance provisions for a control period in a given year by the owners and operators of a group of one or more TR SO_2 Group 2 sources and units in a State (and Indian country within the borders of such State) only if the TR SO_2 Group 2 allowances:

(1) Were allocated for a control period in a prior year or the control period in the given year or in the immediately following year; and

(2) Are held in the assurance account, established by the Administrator for such owners and operators of such group of TR SO_2 Group 2 sources and units in such State (and Indian country within the borders of such State) under paragraph (b)(3) of this section, as of the deadline established in paragraph (b)(4) of this section.

(b) *Deductions for compliance.* The Administrator will deduct TR SO_2 Group 2 allowances available under paragraph (a) of this section for compliance with the TR SO_2 Group 2 assurance provisions for a State for a control period in a given year in accordance with the following procedures:

(1) By June 1, 2013 and June 1 of each year thereafter, the Administrator will:

(i) Calculate, for each State (and Indian country within the borders of such State), the total SO_2 emissions from all TR SO_2 Group 2 units at TR SO_2 Group 2 sources in the State (and Indian country within the borders of such State) during the control period in the year before the year of this calculation deadline and the amount, if any, by which such total SO_2 emissions exceed the State assurance level as described in § 97.706(c)(2)(iii); and

(ii) Promulgate a notice of data availability of the results of the calculations required in paragraph (b)(1)(i) of this section, including separate calculations of the SO_2 emissions from each TR SO_2 Group 2 source.

(2) For each notice of data availability required in paragraph (b)(1)(ii) of this section and for any State (and Indian country within the borders of such State) identified in such notice as having TR SO_2 Group 2 units with total SO_2 emissions exceeding the State assurance level for a control period in a given year, as described in § 97.706(c)(2)(iii):

(i) By July 1 immediately after the promulgation of such notice, the designated representative of each TR SO_2 Group 2 source in each such State (and Indian country within the borders of such State) shall submit a statement, in a format prescribed by the Administrator, providing for each TR SO_2 Group 2 unit (if any) at the source that operates during, but is not allocated an amount of TR SO_2 Group 2 allowances for, such control period, the unit's allowable SO_2 emission rate for such control period and, if such rate is

expressed in lb per mmBtu, the unit's heat rate.

(ii) By August 1 immediately after the promulgation of such notice, the Administrator will calculate, for each such State (and Indian country within the borders of such State) and such control period and each common designated representative for such control period for a group of one or more TR SO_2 Group 2 sources and units in the State (and Indian country within the borders of such State), the common designated representative's share of the total SO_2 emissions from all TR SO_2 Group 2 units at TR SO_2 Group 2 sources in the State (and Indian country within the borders of such State), the common designated representative's assurance level, and the amount (if any) of TR SO_2 Group 2 allowances that the owners and operators of such group of sources and units must hold in accordance with the calculation formula in § 97.706(c)(2)(i) and will promulgate a notice of data availability of the results of these calculations.

(iii) The Administrator will provide an opportunity for submission of objections to the calculations referenced by the notice of data availability required in paragraph (b)(2)(ii) of this section and the calculations referenced by the relevant notice of data availability required in paragraph (b)(1)(i) of this section.

(A) Objections shall be submitted by the deadline specified in such notice and shall be limited to addressing whether the calculations referenced in the relevant notice required under paragraph (b)(1)(ii) of this section and referenced in the notice required under paragraph (b)(2)(ii) of this section are in accordance with § 97.706(c)(2)(iii), §§ 97.706(b) and 97.730 through 97.735, the definitions of ''common designated representative'', ''common designated representative's assurance level'', and ''common designated representative's share'' in § 97.702, and the calculation formula in § 97.706(c)(2)(i).

(B) The Administrator will adjust the calculations to the extent necessary to ensure that they are in accordance with the provisions referenced in paragraph (b)(2)(iii)(A) of this section. By October 1 immediately after the promulgation of such notice, the Administrator will promulgate a notice of data availability of any adjustments that the Administrator determines to be necessary and the reasons for accepting or rejecting any objections submitted in accordance with paragraph (b)(2)(iii)(A) of this section.

(3) For any State (and Indian country within the borders of such State) referenced in each notice of data availability required in paragraph (b)(2)(iii)(B) of this section as having TR SO_2 Group 2 units with total SO_2 emissions exceeding the State assurance level for a control period in a given year, the Administrator will establish one assurance account for each set of owners and operators referenced, in the notice of data availability required under paragraph (b)(2)(iii)(B) of this section, as all of the owners and operators of a group of TR SO_2 Group 2 sources and units in the State (and Indian country within the borders of such State) having a common designated representative for such control period and as being required to hold TR SO_2 Group 2 allowances.

(4)(i) As of midnight of November 1 immediately after the promulgation of each notice of data availability required in paragraph (b)(2)(iii)(B) of this section, the owners and operators described in paragraph (b)(3) of this section shall hold in the assurance account established for them and for the appropriate TR SO_2 Group 2 sources, TR SO_2 Group 2 units, and State (and Indian country within the borders of such State) under paragraph (b)(3) of this section a total amount of TR SO_2 Group 2 allowances, available for deduction under paragraph (a) of this section, equal to the amount such owners and operators are required to hold with regard to such sources, units and State (and Indian country within the borders of such State) as calculated by the Administrator and referenced in such notice.

(ii) Notwithstanding the allowance-holding deadline specified in paragraph (b)(4)(i) of this section, if November 1 is not a business day, then such allowance-holding deadline shall be midnight of the first business day thereafter.

(5) After November 1 (or the date described in paragraph (b)(4)(ii) of this section) immediately after the promulgation of each notice of data availability required in paragraph (b)(2)(iii)(B) of this section and after the recordation, in accordance with § 97.723, of TR SO_2 Group 2 allowance transfers submitted by midnight of such date, the Administrator will determine whether the owners and operators described in paragraph (b)(3) of this section hold, in the assurance account for the appropriate TR SO_2 Group 2 sources, TR SO_2 Group 2 units, and State (and Indian country within the borders of such State) established under paragraph (b)(3) of this section, the amount of TR SO_2 Group 2 allowances available under paragraph (a) of this section that the owners and operators are required to hold with regard to such sources, units, and State (and Indian country within the borders of such State) as calculated by the Administrator and referenced in the notice required in paragraph (b)(2)(iii)(B) of this section.

(6) Notwithstanding any other provision of this subpart and any revision, made by or submitted to the Administrator after the promulgation of the notice of data availability required in paragraph (b)(2)(iii)(B) of this section for a control period in a given year, of any data used in making the calculations referenced in such notice, the amounts of TR SO_2 Group 2 allowances that the owners and operators are required to hold in accordance with § 97.706(c)(2)(i) for such control period shall continue to be such amounts as calculated by the Administrator and referenced in such notice required in paragraph (b)(2)(iii)(B) of this section, except as follows:

(i) If any such data are revised by the Administrator as a result of a decision in or settlement of litigation concerning such data on appeal under part 78 of this chapter of such notice, or on appeal under section 307 of the Clean Air Act of a decision rendered under part 78 of this chapter on appeal of such notice, then the Administrator will use the data as so revised to recalculate the amounts of TR SO_2 Group 2 allowances that owners and operators are required to hold in accordance with the calculation formula in § 97.706(c)(2)(i) for such control period with regard to the TR SO_2 Group 2 sources, TR SO_2 Group 2 units, and State (and Indian country within the borders of such State) involved, provided that such litigation under part 78 of this chapter, or the proceeding under part 78 of this chapter that resulted in the decision appealed in such litigation under section 307 of the Clean Air Act, was initiated no later than 30 days after promulgation of such notice required in paragraph (b)(2)(iii)(B) of this section.

(ii) If any such data are revised by the owners and operators of a TR SO_2 Group 2 source and TR SO_2 Group 2 unit whose designated representative submitted such data under paragraph (b)(2)(i) of this section, as a result of a decision in or settlement of litigation concerning such submission, then the Administrator will use the data as so revised to recalculate the amounts of TR SO_2 Group 2 allowances that owners and operators are required to hold in accordance with the calculation formula in § 97.706(c)(2)(i) for such control period with regard to the TR SO_2 Group 2 sources, TR SO_2 Group 2 units, and State (and Indian country within the

borders of such State) involved, provided that such litigation was initiated no later than 30 days after promulgation of such notice required in paragraph (b)(2)(iii)(B) of this section.

(iii) If the revised data are used to recalculate, in accordance with paragraphs (b)(6)(i) and (ii) of this section, the amount of TR SO_2 Group 2 allowances that the owners and operators are required to hold for such control period with regard to the TR SO_2 Group 2 sources, TR SO_2 Group 2 units, and State (and Indian country within the borders of such State) involved—

(A) Where the amount of TR SO_2 Group 2 allowances that the owners and operators are required to hold increases as a result of the use of all such revised data, the Administrator will establish a new, reasonable deadline on which the owners and operators shall hold the additional amount of TR SO_2 Group 2 allowances in the assurance account established by the Administrator for the appropriate TR SO_2 Group 2 sources, TR SO_2 Group 2 units, and State (and Indian country within the borders of such State) under paragraph (b)(3) of this section. The owners' and operators' failure to hold such additional amount, as required, before the new deadline shall not be a violation of the Clean Air Act. The owners' and operators' failure to hold such additional amount, as required, as of the new deadline shall be a violation of the Clean Air Act. Each TR SO_2 Group 2 allowance that the owners and operators fail to hold as required as of the new deadline, and each day in such control period, shall be a separate violation of the Clean Air Act.

(B) For the owners and operators for which the amount of TR SO_2 Group 2 allowances required to be held decreases as a result of the use of all such revised data, the Administrator will record, in all accounts from which TR SO_2 Group 2 allowances were transferred by such owners and operators for such control period to the assurance account established by the Administrator for the appropriate at TR SO_2 Group 2 sources, TR SO_2 Group 2 units, and State (and Indian country within the borders of such State) under paragraph (b)(3) of this section, a total amount of the TR SO_2 Group 2 allowances held in such assurance account equal to the amount of the decrease. If TR SO_2 Group 2 allowances were transferred to such assurance account from more than one account, the amount of TR SO_2 Group 2 allowances recorded in each such transferor account will be in proportion to the percentage of the total amount of TR SO_2 Group 2 allowances transferred to such assurance account for such control period from such transferor account.

(C) Each TR SO_2 Group 2 allowance held under paragraph (b)(6)(iii)(A) of this section as a result of recalculation of requirements under the TR SO_2 Group 2 assurance provisions for such control period must be a TR SO_2 Group 2 allowance allocated for a control period in a year before or the year immediately following, or in the same year as, the year of such control period.

§ 97.726 Banking.

(a) A TR SO_2 Group 2 allowance may be banked for future use or transfer in a compliance account or a general account in accordance with paragraph (b) of this section.

(b) Any TR SO_2 Group 2 allowance that is held in a compliance account or a general account will remain in such account unless and until the TR SO_2 Group 2 allowance is deducted or transferred under § 97.711(c), § 97.723, § 97.724, § 97.725, § 97.727, or § 97.728.

§ 97.727 Account error.

The Administrator may, at his or her sole discretion and on his or her own motion, correct any error in any Allowance Management System account. Within 10 business days of making such correction, the Administrator will notify the authorized account representative for the account.

§ 97.728 Administrator's action on submissions.

(a) The Administrator may review and conduct independent audits concerning any submission under the TR SO_2 Group 2 Trading Program and make appropriate adjustments of the information in the submission.

(b) The Administrator may deduct TR SO_2 Group 2 allowances from or transfer TR SO_2 Group 2 allowances to a compliance account or an assurance account, based on the information in a submission, as adjusted under paragraph (a)(1) of this section, and record such deductions and transfers.

§ 97.729 [Reserved]

§ 97.730 General monitoring, recordkeeping, and reporting requirements.

The owners and operators, and to the extent applicable, the designated representative, of a TR SO_2 Group 2 unit, shall comply with the monitoring, recordkeeping, and reporting requirements as provided in this subpart and subparts F and G of part 75 of this chapter. For purposes of applying such requirements, the definitions in § 97.702 and in § 72.2 of this chapter shall apply, the terms ''affected unit,'' ''designated representative,'' and ''continuous emission monitoring system'' (or ''CEMS'') in part 75 of this chapter shall be deemed to refer to the terms ''TR SO_2 Group 2 unit,'' ''designated representative,'' and ''continuous emission monitoring system'' (or ''CEMS'') respectively as defined in § 97.702, and the term ''newly affected unit'' shall be deemed to mean ''newly affected TR SO_2 Group 2 unit''. The owner or operator of a unit that is not a TR SO_2 Group 2 unit but that is monitored under § 75.16(b)(2) of this chapter shall comply with the same monitoring, recordkeeping, and reporting requirements as a TR SO_2 Group 2 unit.

(a) Requirements for installation, certification, and data accounting. The owner or operator of each TR SO_2 Group 2 unit shall:

(1) Install all monitoring systems required under this subpart for monitoring SO_2 mass emissions and individual unit heat input (including all systems required to monitor SO_2 concentration, stack gas moisture content, stack gas flow rate, CO_2 or O_2 concentration, and fuel flow rate, as applicable, in accordance with §§ 75.11 and 75.16 of this chapter);

(2) Successfully complete all certification tests required under § 97.731 and meet all other requirements of this subpart and part 75 of this chapter applicable to the monitoring systems under paragraph (a)(1) of this section; and

(3) Record, report, and quality-assure the data from the monitoring systems under paragraph (a)(1) of this section.

(b) *Compliance deadlines.* Except as provided in paragraph (e) of this section, the owner or operator shall meet the monitoring system certification and other requirements of paragraphs (a)(1) and (2) of this section on or before the following dates and shall record, report, and quality-assure the data from the monitoring systems under paragraph (a)(1) of this section on and after the following dates.

(1) For the owner or operator of a TR SO_2 Group 2 unit that commences commercial operation before July 1, 2011, January 1, 2012.

(2) For the owner or operator of a TR SO_2 Group 2 unit that commences commercial operation on or after July 1, 2011, by the later of the following:

(i) January 1, 2012; or

(ii) 180 calendar days after the date on which the unit commences commercial operation.

(3) The owner or operator of a TR SO_2 Group 2 unit for which construction of a new stack or flue or installation of add-on SO_2 emission controls is completed after the applicable deadline

under paragraph (b)(1) or (2) of this section shall meet the requirements of §§ 75.4(e)(1) through (e)(4) of this chapter, except that:

(i) Such requirements shall apply to the monitoring systems required under § 97.730 through § 97.735, rather than the monitoring systems required under part 75 of this chapter;

(ii) SO_2 concentration, stack gas moisture content, stack gas volumetric flow rate, and O_2 or CO_2 concentration data shall be determined and reported, rather than the data listed in § 75.4(e)(2) of this chapter; and

(iii) Any petition for another procedure under § 75.4(e)(2) of this chapter shall be submitted under § 97.735, rather than § 75.66.

(c) *Reporting data.* The owner or operator of a TR SO_2 Group 2 unit that does not meet the applicable compliance date set forth in paragraph (b) of this section for any monitoring system under paragraph (a)(1) of this section shall, for each such monitoring system, determine, record, and report maximum potential (or, as appropriate, minimum potential) values for SO_2 concentration, stack gas flow rate, stack gas moisture content, fuel flow rate, and any other parameters required to determine SO_2 mass emissions and heat input in accordance with § 75.31(b)(2) or (c)(3) of this chapter or section 2.4 of appendix D to part 75 of this chapter, as applicable.

(d) *Prohibitions.* (1) No owner or operator of a TR SO_2 Group 2 unit shall use any alternative monitoring system, alternative reference method, or any other alternative to any requirement of this subpart without having obtained prior written approval in accordance with § 97.735.

(2) No owner or operator of a TR SO_2 Group 2 unit shall operate the unit so as to discharge, or allow to be discharged, SO_2 to the atmosphere without accounting for all such SO_2 in accordance with the applicable provisions of this subpart and part 75 of this chapter.

(3) No owner or operator of a TR SO_2 Group 2 unit shall disrupt the continuous emission monitoring system, any portion thereof, or any other approved emission monitoring method, and thereby avoid monitoring and recording SO_2 mass discharged into the atmosphere or heat input, except for periods of recertification or periods when calibration, quality assurance testing, or maintenance is performed in accordance with the applicable provisions of this subpart and part 75 of this chapter.

(4) No owner or operator of a TR SO_2 Group 2 unit shall retire or permanently discontinue use of the continuous emission monitoring system, any component thereof, or any other approved monitoring system under this subpart, except under any one of the following circumstances:

(i) During the period that the unit is covered by an exemption under § 97.705 that is in effect;

(ii) The owner or operator is monitoring emissions from the unit with another certified monitoring system approved, in accordance with the applicable provisions of this subpart and part 75 of this chapter, by the Administrator for use at that unit that provides emission data for the same pollutant or parameter as the retired or discontinued monitoring system; or

(iii) The designated representative submits notification of the date of certification testing of a replacement monitoring system for the retired or discontinued monitoring system in accordance with § 97.731(d)(3)(i).

(e) *Long-term cold storage.* The owner or operator of a TR SO_2 Group 2 unit is subject to the applicable provisions of § 75.4(d) of this chapter concerning units in long-term cold storage.

§ 97.731 Initial monitoring system certification and recertification procedures.

(a) The owner or operator of a TR SO_2 Group 2 unit shall be exempt from the initial certification requirements of this section for a monitoring system under § 97.730(a)(1) if the following conditions are met:

(1) The monitoring system has been previously certified in accordance with part 75 of this chapter; and

(2) The applicable quality-assurance and quality-control requirements of § 75.21 of this chapter and appendices B and D to part 75 of this chapter are fully met for the certified monitoring system described in paragraph (a)(1) of this section.

(b) The recertification provisions of this section shall apply to a monitoring system under § 97.730(a)(1) that is exempt from initial certification requirements under paragraph (a) of this section.

(c) [Reserved]

(d) Except as provided in paragraph (a) of this section, the owner or operator of a TR SO_2 Group 2 unit shall comply with the following initial certification and recertification procedures, for a continuous monitoring system (*i.e.,* a continuous emission monitoring system and an excepted monitoring system under appendix D to part 75 of this chapter) under § 97.730(a)(1). The owner or operator of a unit that qualifies to use the low mass emissions excepted monitoring methodology under § 75.19 of this chapter or that qualifies to use an alternative monitoring system under subpart E of part 75 of this chapter shall comply with the procedures in paragraph (e) or (f) of this section respectively.

(1) Requirements for initial certification. The owner or operator shall ensure that each continuous monitoring system under § 97.730(a)(1) (including the automated data acquisition and handling system) successfully completes all of the initial certification testing required under § 75.20 of this chapter by the applicable deadline in § 97.730(b). In addition, whenever the owner or operator installs a monitoring system to meet the requirements of this subpart in a location where no such monitoring system was previously installed, initial certification in accordance with § 75.20 of this chapter is required.

(2) Requirements for recertification. Whenever the owner or operator makes a replacement, modification, or change in any certified continuous emission monitoring system under § 97.730(a)(1) that may significantly affect the ability of the system to accurately measure or record SO_2 mass emissions or heat input rate or to meet the quality-assurance and quality-control requirements of § 75.21 of this chapter or appendix B to part 75 of this chapter, the owner or operator shall recertify the monitoring system in accordance with § 75.20(b) of this chapter. Furthermore, whenever the owner or operator makes a replacement, modification, or change to the flue gas handling system or the unit's operation that may significantly change the stack flow or concentration profile, the owner or operator shall recertify each continuous emission monitoring system whose accuracy is potentially affected by the change, in accordance with § 75.20(b) of this chapter. Examples of changes to a continuous emission monitoring system that require recertification include: Replacement of the analyzer, complete replacement of an existing continuous emission monitoring system, or change in location or orientation of the sampling probe or site. Any fuel flowmeter system under § 97.730(a)(1) is subject to the recertification requirements in § 75.20(g)(6) of this chapter.

(3) Approval process for initial certification and recertification. For initial certification of a continuous monitoring system under § 97.730(a)(1), paragraphs (d)(3)(i) through (v) of this section apply. For recertifications of such monitoring systems, paragraphs (d)(3)(i) through (iv) of this section and the procedures in §§ 75.20(b)(5) and (g)(7) of this chapter (in lieu of the

procedures in paragraph (d)(3)(v) of this section) apply, provided that in applying paragraphs (d)(3)(i) through (iv) of this section, the words ''certification'' and ''initial certification'' are replaced by the word ''recertification'' and the word ''certified'' is replaced by with the word ''recertified''.

(i) Notification of certification. The designated representative shall submit to the appropriate EPA Regional Office and the Administrator written notice of the dates of certification testing, in accordance with § 97.733.

(ii) Certification application. The designated representative shall submit to the Administrator a certification application for each monitoring system. A complete certification application shall include the information specified in § 75.63 of this chapter.

(iii) Provisional certification date. The provisional certification date for a monitoring system shall be determined in accordance with § 75.20(a)(3) of this chapter. A provisionally certified monitoring system may be used under the TR SO_2 Group 2 Trading Program for a period not to exceed 120 days after receipt by the Administrator of the complete certification application for the monitoring system under paragraph (d)(3)(ii) of this section. Data measured and recorded by the provisionally certified monitoring system, in accordance with the requirements of part 75 of this chapter, will be considered valid quality-assured data (retroactive to the date and time of provisional certification), provided that the Administrator does not invalidate the provisional certification by issuing a notice of disapproval within 120 days of the date of receipt of the complete certification application by the Administrator.

(iv) Certification application approval process. The Administrator will issue a written notice of approval or disapproval of the certification application to the owner or operator within 120 days of receipt of the complete certification application under paragraph (d)(3)(ii) of this section. In the event the Administrator does not issue such a notice within such 120-day period, each monitoring system that meets the applicable performance requirements of part 75 of this chapter and is included in the certification application will be deemed certified for use under the TR SO_2 Group 2 Trading Program.

(A) Approval notice. If the certification application is complete and shows that each monitoring system meets the applicable performance requirements of part 75 of this chapter, then the Administrator will issue a written notice of approval of the certification application within 120 days of receipt.

(B) Incomplete application notice. If the certification application is not complete, then the Administrator will issue a written notice of incompleteness that sets a reasonable date by which the designated representative must submit the additional information required to complete the certification application. If the designated representative does not comply with the notice of incompleteness by the specified date, then the Administrator may issue a notice of disapproval under paragraph (d)(3)(iv)(C) of this section.

(C) Disapproval notice. If the certification application shows that any monitoring system does not meet the performance requirements of part 75 of this chapter or if the certification application is incomplete and the requirement for disapproval under paragraph (d)(3)(iv)(B) of this section is met, then the Administrator will issue a written notice of disapproval of the certification application. Upon issuance of such notice of disapproval, the provisional certification is invalidated by the Administrator and the data measured and recorded by each uncertified monitoring system shall not be considered valid quality-assured data beginning with the date and hour of provisional certification (as defined under § 75.20(a)(3) of this chapter).

(D) Audit decertification. The Administrator may issue a notice of disapproval of the certification status of a monitor in accordance with § 97.732(b).

(v) Procedures for loss of certification. If the Administrator issues a notice of disapproval of a certification application under paragraph (d)(3)(iv)(C) of this section or a notice of disapproval of certification status under paragraph (d)(3)(iv)(D) of this section, then:

(A) The owner or operator shall substitute the following values, for each disapproved monitoring system, for each hour of unit operation during the period of invalid data specified under § 75.20(a)(4)(iii), § 75.20(g)(7), or § 75.21(e) of this chapter and continuing until the applicable date and hour specified under § 75.20(a)(5)(i) or (g)(7) of this chapter:

(1) For a disapproved SO_2 pollutant concentration monitor and disapproved flow monitor, respectively, the maximum potential concentration of SO_2 and the maximum potential flow rate, as defined in sections 2.1.1.1 and 2.1.4.1 of appendix A to part 75 of this chapter.

(2) For a disapproved moisture monitoring system and disapproved diluent gas monitoring system, respectively, the minimum potential moisture percentage and either the maximum potential CO_2 concentration or the minimum potential O_2 concentration (as applicable), as defined in sections 2.1.5, 2.1.3.1, and 2.1.3.2 of appendix A to part 75 of this chapter.

(3) For a disapproved fuel flowmeter system, the maximum potential fuel flow rate, as defined in section 2.4.2.1 of appendix D to part 75 of this chapter.

(B) The designated representative shall submit a notification of certification retest dates and a new certification application in accordance with paragraphs (d)(3)(i) and (ii) of this section.

(C) The owner or operator shall repeat all certification tests or other requirements that were failed by the monitoring system, as indicated in the Administrator's notice of disapproval, no later than 30 unit operating days after the date of issuance of the notice of disapproval.

(e) The owner or operator of a unit qualified to use the low mass emissions (LME) excepted methodology under § 75.19 of this chapter shall meet the applicable certification and recertification requirements in §§ 75.19(a)(2) and 75.20(h) of this chapter. If the owner or operator of such a unit elects to certify a fuel flowmeter system for heat input determination, the owner or operator shall also meet the certification and recertification requirements in § 75.20(g) of this chapter.

(f) The designated representative of each unit for which the owner or operator intends to use an alternative monitoring system approved by the Administrator under subpart E of part 75 of this chapter shall comply with the applicable notification and application procedures of § 75.20(f) of this chapter.

§ 97.732 Monitoring system out-of-control periods.

(a) *General provisions.* Whenever any monitoring system fails to meet the quality-assurance and quality-control requirements or data validation requirements of part 75 of this chapter, data shall be substituted using the applicable missing data procedures in subpart D or appendix D to part 75 of this chapter.

(b) *Audit decertification.* Whenever both an audit of a monitoring system and a review of the initial certification or recertification application reveal that any monitoring system should not have been certified or recertified because it did not meet a particular performance

specification or other requirement under § 97.731 or the applicable provisions of part 75 of this chapter, both at the time of the initial certification or recertification application submission and at the time of the audit, the Administrator will issue a notice of disapproval of the certification status of such monitoring system. For the purposes of this paragraph, an audit shall be either a field audit or an audit of any information submitted to the Administrator or any State or permitting authority. By issuing the notice of disapproval, the Administrator revokes prospectively the certification status of the monitoring system. The data measured and recorded by the monitoring system shall not be considered valid quality-assured data from the date of issuance of the notification of the revoked certification status until the date and time that the owner or operator completes subsequently approved initial certification or recertification tests for the monitoring system. The owner or operator shall follow the applicable initial certification or recertification procedures in § 97.731 for each disapproved monitoring system.

§ 97.733 Notifications concerning monitoring.

The designated representative of a TR SO_2 Group 2 unit shall submit written notice to the Administrator in accordance with § 75.61 of this chapter.

§ 97.734 Recordkeeping and reporting.

(a) *General provisions.* The designated representative shall comply with all recordkeeping and reporting requirements in paragraphs (b) through (e) of this section, the applicable recordkeeping and reporting requirements in subparts F and G of part 75 of this chapter, and the requirements of § 97.714(a).

(b) *Monitoring plans.* The owner or operator of a TR SO_2 Group 2 unit shall comply with requirements of § 75.62 of this chapter.

(c) *Certification applications.* The designated representative shall submit an application to the Administrator within 45 days after completing all initial certification or recertification tests required under § 97.731, including the information required under § 75.63 of this chapter.

(d) *Quarterly reports.* The designated representative shall submit quarterly reports, as follows:

(1) The designated representative shall report the SO_2 mass emissions data and heat input data for the TR SO_2 Group 2 unit, in an electronic quarterly report in a format prescribed by the Administrator, for each calendar quarter beginning with:

(i) For a unit that commences commercial operation before July 1, 2011, the calendar quarter covering January 1, 2012 through March 31, 2012; or

(ii) For a unit that commences commercial operation on or after July 1, 2011, the calendar quarter corresponding to the earlier of the date of provisional certification or the applicable deadline for initial certification under § 97.730(b), unless that quarter is the third or fourth quarter of 2011, in which case reporting shall commence in the quarter covering January 1, 2012 through March 31, 2012.

(2) The designated representative shall submit each quarterly report to the Administrator within 30 days after the end of the calendar quarter covered by the report. Quarterly reports shall be submitted in the manner specified in § 75.64 of this chapter.

(3) For TR SO_2 Group 2 units that are also subject to the Acid Rain Program, TR NO_X Annual Trading Program, or TR NO_X Ozone Season Trading Program, quarterly reports shall include the applicable data and information required by subparts F through H of part 75 of this chapter as applicable, in addition to the SO_2 mass emission data, heat input data, and other information required by this subpart.

(4) The Administrator may review and conduct independent audits of any quarterly report in order to determine whether the quarterly report meets the requirements of this subpart and part 75 of this chapter, including the requirement to use substitute data.

(i) The Administrator will notify the designated representative of any determination that the quarterly report fails to meet any such requirements and specify in such notification any corrections that the Administrator believes are necessary to make through resubmission of the quarterly report and a reasonable time period within which the designated representative must respond. Upon request by the designated representative, the Administrator may specify reasonable extensions of such time period. Within the time period (including any such extensions) specified by the Administrator, the designated representative shall resubmit the quarterly report with the corrections specified by the Administrator, except to the extent the designated representative provides information demonstrating that a specified correction is not necessary because the quarterly report already meets the requirements of this subpart and part 75 of this chapter that are relevant to the specified correction.

(ii) Any resubmission of a quarterly report shall meet the requirements applicable to the submission of a quarterly report under this subpart and part 75 of this chapter, except for the deadline set forth in paragraph (d)(2) of this section.

(e) *Compliance certification.* The designated representative shall submit to the Administrator a compliance certification (in a format prescribed by the Administrator) in support of each quarterly report based on reasonable inquiry of those persons with primary responsibility for ensuring that all of the unit's emissions are correctly and fully monitored. The certification shall state that:

(1) The monitoring data submitted were recorded in accordance with the applicable requirements of this subpart and part 75 of this chapter, including the quality assurance procedures and specifications; and

(2) For a unit with add-on SO_2 emission controls and for all hours where SO_2 data are substituted in accordance with § 75.34(a)(1) of this chapter, the add-on emission controls were operating within the range of parameters listed in the quality assurance/quality control program under appendix B to part 75 of this chapter and the substitute data values do not systematically underestimate SO_2 emissions.

§ 97.735 Petitions for alternatives to monitoring, recordkeeping, or reporting requirements.

(a) The designated representative of a TR SO_2 Group 2 unit may submit a petition under § 75.66 of this chapter to the Administrator, requesting approval to apply an alternative to any requirement of §§ 97.730 through 97.734.

(b) A petition submitted under paragraph (a) of this section shall include sufficient information for the evaluation of the petition, including, at a minimum, the following information:

(i) Identification of each unit and source covered by the petition;

(ii) A detailed explanation of why the proposed alternative is being suggested in lieu of the requirement;

(iii) A description and diagram of any equipment and procedures used in the proposed alternative;

(iv) A demonstration that the proposed alternative is consistent with the purposes of the requirement for which the alternative is proposed and with the purposes of this subpart and part 75 of this chapter and that any

adverse effect of approving the alternative will be *de minimis;* and

(v) Any other relevant information that the Administrator may require.

(c) Use of an alternative to any requirement referenced in paragraph (a) of this section is in accordance with this subpart only to the extent that the petition is approved in writing by the Administrator and that such use is in accordance with such approval.

[FR Doc. 2011–17600 Filed 8–5–11; 8:45 am]

BILLING CODE 6560–50–P

FEDERAL REGISTER

Vol. 76 Monday,

No. 152 August 8, 2011

Part III

Department of Health and Human Services

Centers for Medicare & Medicaid Services

42 CFR Part 413

Medicare Program; Prospective Payment System and Consolidated Billing for Skilled Nursing Facilities for FY 2012; Final Rule

DEPARTMENT OF HEALTH AND HUMAN SERVICES

Centers for Medicare & Medicaid Services

42 CFR Part 413

[CMS–1351–F]

RIN 0938–AQ29

Medicare Program; Prospective Payment System and Consolidated Billing for Skilled Nursing Facilities for FY 2012

AGENCY: Centers for Medicare & Medicaid Services (CMS), HHS.

ACTION: Final rule.

SUMMARY: This final rule updates the payment rates used under the prospective payment system for skilled nursing facilities (SNFs) for fiscal year 2012. In addition, it recalibrates the case-mix indexes so that they more accurately reflect parity in expenditures between RUG–IV and the previous case-mix classification system. It also includes a discussion of a Non-Therapy Ancillary component currently under development within CMS. In addition, this final rule discusses the impact of certain provisions of the Affordable Care Act, and reduces the SNF market basket percentage by the multi-factor productivity adjustment. This rule also implements certain changes relating to the payment of group therapy services and implements new resident assessment policies. Finally, this rule announces that the proposed provisions regarding the ownership disclosure requirements set forth in section 6101 of the Affordable Care Act will be finalized at a later date.

DATES: *Effective Date:* This final rule is effective on October 1, 2011.

FOR FURTHER INFORMATION CONTACT:

Penny Gershman, (410) 786–6643 (for information related to clinical issues).

John Kane, (410) 786–0557 (for information related to the development of the payment rates and case-mix indexes).

Kia Sidbury, (410) 786–7816 (for information related to the wage index).

Bill Ullman, (410) 786–5667 (for information related to level of care determinations, consolidated billing, and general information).

SUPPLEMENTARY INFORMATION:

Table of Contents

I. Background
A. Current System for Payment of SNF Services Under Part A of the Medicare Program
B. Requirements of the Balanced Budget Act of 1997 (BBA) for Updating the Prospective Payment System for Skilled Nursing Facilities
C. The Medicare, Medicaid, and SCHIP Balanced Budget Refinement Act of 1999 (BBRA)
D. The Medicare, Medicaid, and SCHIP Benefits Improvement and Protection Act of 2000 (BIPA)
E. The Medicare Prescription Drug, Improvement, and Modernization Act of 2003 (MMA)
F. The Affordable Care Act
G. Skilled Nursing Facility Prospective Payment—General Overview
1. Payment Provisions—Federal Rate
2. FY 2012 Rate Updates Using the Skilled Nursing Facility Market Basket Index
II. Summary of the Provisions of the FY 2012 Proposed Rule
III. Analysis of and Responses to Public Comments on the FY 2012 Proposed Rule
A. General Comments on the FY 2012 Proposed Rule
B. FY 2012 Annual Update of Payment Rates under the Prospective Payment System for Skilled Nursing Facilities
1. Federal Prospective Payment System
a. Costs and Services Covered by the Federal Rates
b. Methodology Used for the Calculation of the Federal Rates
2. Case-Mix Adjustments
a. Background
b. Development of Case-Mix Indexes
3. Wage Index Adjustment to Federal Rates
4. Updates to Federal Rates
5. Relationship of RUG–IV Case-Mix Classification System to Existing Skilled Nursing Facility Level-of-Care Criteria
6. Example of Computation of Adjusted PPS Rates and SNF Payment
C. Resource Utilization Groups, Version 4 (RUG–IV)
1. Prospective Payment for SNF Non-Therapy Ancillary Costs
D. Ongoing Initiatives Under the Affordable Care Act
1. Value-Based Purchasing (Section 3006)
2. Payment Adjustment for Hospital-Acquired Conditions (Section 3008)
3. Nursing Home Transparency and Improvement (Section 6104)
E. Other Issues
1. Required Disclosure of Ownership and Additional Disclosable Parties Information (Section 6101)
2. Therapy Student Supervision
3. Group Therapy and Therapy Documentation
4. Proposed Changes to the MDS 3.0 Assessment Schedule and Other Medicare-Required Assessments
5. Discussion of Possible Future Initiatives
F. The Skilled Nursing Facility Market Basket Index
1. Use of the Skilled Nursing Facility Market Basket Percentage
2. Market Basket Forecast Error Adjustment
3. Multifactor Productivity Adjustment
a. Incorporating the Multifactor Productivity Adjustment Into the Market Basket Update
b. Federal Rate Update Factor
G. Consolidated Billing
H. Application of the SNF PPS to SNF Services Furnished by Swing-Bed Hospitals
IV. Analysis of and Responses to Public Comments on the FY 2011 Update Notice With Comment
V. Provisions of the Final Rule
VI. Collection of Information Requirements
VII. Economic Analyses
A. Regulatory Impact Analysis
1. Introduction
2. Statement of Need
3. Overall Impacts
4. Detailed Economic Analysis
5. Alternatives Considered
6. Accounting Statement
7. Conclusion
B. Regulatory Flexibility Act Analysis
C. Unfunded Mandates Reform Act Analysis
D. Federalism Analysis
Regulation Text
Addendum: FY 2012 CBSA-Based Wage Index Tables (Tables A & B)

Acronyms

In addition, because of the many terms to which we refer by acronym in this final rule, we are listing these acronyms and their corresponding terms in alphabetical order below:

ABN Advance Beneficiary Notice
AIDS Acquired Immune Deficiency Syndrome
ARD Assessment Reference Date
ASAP Assessment Submission and Processing
BBA Balanced Budget Act of 1997, Public Law 105–33
BBRA Medicare, Medicaid, and SCHIP Balanced Budget Refinement Act of 1999, Public Law 106–113
BIMS Brief Interview for Mental Status
BIPA Medicare, Medicaid, and SCHIP Benefits Improvement and Protection Act of 2000, Public Law 106–554
CAH Critical Access Hospital
CBSA Core-Based Statistical Area
CCR Cost-to-Charge Ratio
CFR Code of Federal Regulations
CMI Case-Mix Index
CMS Centers for Medicare & Medicaid Services
COT Change of Therapy
EOT End of Therapy
EOT—R End of Therapy—Resumption
FQHC Federally Qualified Health Center
FR **Federal Register**
FY Fiscal Year
GAO Government Accountability Office
HAC Hospital-Acquired Condition
HCC Hierarchical Condition Category
HCPCS Healthcare Common Procedure Coding System
HIPAA Health Insurance Portability and Accountability Act of 1996
HR–III Hybrid Resource Utilization Groups, Version 3
IGI IHS (Information Handling Services) Global Insight, Inc.
MDS Minimum Data Set
MFP Multifactor Productivity
MIPPA Medicare Improvements for Patients and Providers Act of 2008, Public Law 110–275

MMA Medicare Prescription Drug, Improvement, and Modernization Act of 2003, Public Law 108–173
MMSEA Medicare, Medicaid, and SCHIP Extension Act of 2007, Public Law 110–173
MPAF Medicare PPS Assessment Form
MSA Metropolitan Statistical Area
NTA Non-Therapy Ancillary
OMB Office of Management and Budget
OMRA Other Medicare-Required Assessment
ONTA Other Non-Therapy Ancillary
OSCAR Online Survey Certification and Reporting System
PAC–PRD Post Acute Care Payment Reform Demonstration
PECOS Medicare Provider Enrollment, Chain, and Ownership System
PPS Prospective Payment System
QIES Quality Improvement and Evaluation System
RAI Resident Assessment Instrument
RAVEN Resident Assessment Validation Entry
RFA Regulatory Flexibility Act, Public Law 96–354
RNP Routine NTA Bundled Payment
RHC Rural Health Clinic
RIA Regulatory Impact Analysis
RTM Reimbursable Therapy Minutes
RUG–III Resource Utilization Groups, Version 3
RUG–IV Resource Utilization Groups, Version 4
RUG–53 Refined 53—Group RUG–III Case-Mix Classification System
SCHIP State Children's Health Insurance Program
SCPA Significant Correction of a Prior Assessment
SCSA Significant Change in Status Assessment
SNF Skilled Nursing Facility
STM Staff Time Measurement
STRIVE Staff Time and Resource Intensity Verification
TNP Tiered Non-Routine NTA Payment
UMRA Unfunded Mandates Reform Act, Public Law 104–4

I. Background

In the May 6, 2011 **Federal Register**, we published a proposed rule (76 FR 26364) (hereafter referred to as the FY 2012 proposed rule), setting forth potential updates to the payment rates used under the prospective payment system (PPS) for skilled nursing facilities (SNFs), for fiscal year (FY) 2012. Annual updates to the PPS rates for (SNFs) are required by section 1888(e) of the Social Security Act (the Act), as added by section 4432 of the Balanced Budget Act of 1997 (BBA, Pub. L. 105–33, enacted on August 5, 1997), and amended by subsequent legislation as discussed elsewhere in this preamble. Our most recent annual update occurred in an update notice with comment period (75 FR 42886, July 22, 2010) that set forth updates to the SNF PPS payment rates for fiscal year (FY) 2011. We subsequently published a correction notice (75 FR 55801, September 14, 2010) for those payment rate updates. We respond to public comments which relate to the FY 2011 update notice, along with those relating to the FY 2012 proposed rule, in this final rule.

A. Current System for Payment of Skilled Nursing Facility Services Under Part A of the Medicare Program

Section 4432 of the BBA amended section 1888 of the Act to provide for the implementation of a per diem PPS for SNFs, covering all costs (routine, ancillary, and capital-related) of covered SNF services furnished to beneficiaries under Part A of the Medicare program, effective for cost reporting periods beginning on or after July 1, 1998. In this final rule, we are updating the per diem payment rates for SNFs for FY 2012. Major elements of the SNF PPS include:

• *Rates.* As discussed in section I.G.1. of this final rule, we established per diem Federal rates for urban and rural areas using allowable costs from FY 1995 cost reports. These rates also included a ''Part B add-on'' (an estimate of the cost of those services that, before July 1, 1998, were paid under Part B but furnished to Medicare beneficiaries in a SNF during a Part A covered stay). We adjust the rates annually using a SNF market basket index, and we adjust them by the hospital inpatient wage index to account for geographic variation in wages. We also apply a case-mix adjustment to account for the relative resource utilization of different patient types. As further discussed in section I.G.1. of this final rule, for FY 2012 this adjustment will utilize the Resource Utilization Groups, version 4 (RUG–IV) case-mix classification, and will use information obtained from the required resident assessments using version 3.0 of the Minimum Data Set (MDS 3.0). (The information collection burden associated with the resident assessment is approved under OMB Control Number 0938–0739.) Additionally, as noted elsewhere in this preamble, the payment rates at various times have also reflected specific legislative provisions for certain temporary adjustments.

• *Transition.* Under sections 1888(e)(1)(A) and (e)(11) of the Act, the SNF PPS included an initial, three-phase transition that blended a facility-specific rate (reflecting the individual facility's historical cost experience) with the Federal case-mix adjusted rate. The transition extended through the facility's first three cost reporting periods under the PPS, up to and including the one that began in FY 2001. Thus, the SNF PPS is no longer operating under the transition, as all facilities have been paid at the full Federal rate effective with cost reporting periods beginning in FY 2002. As we now base payments entirely on the adjusted Federal per diem rates, we no longer include adjustment factors related to facility-specific rates for the coming fiscal year.

• *Coverage.* The establishment of the SNF PPS did not change Medicare's fundamental requirements for SNF coverage. However, because the case-mix classification is based, in part, on the beneficiary's need for skilled nursing care and therapy, we have attempted, where possible, to coordinate claims review procedures with the existing resident assessment process and case-mix classification system. As further discussed in section III.B.5. of this final rule, this approach includes an administrative presumption that utilizes a beneficiary's initial classification in one of the upper 52 RUGs of the 66-group RUG–IV case-mix classification system to assist in making certain SNF level of care determinations. In the July 30, 1999 final rule (64 FR 41670), we indicated that we would announce any changes to the guidelines for Medicare level of care determinations related to modifications in the case-mix classification structure (see section III.B.5. of this final rule for a more detailed discussion of the relationship between the case-mix classification system and SNF level of care determinations).

• *Consolidated Billing.* The SNF PPS includes a consolidated billing provision that requires a SNF to submit consolidated Medicare bills to its fiscal intermediary or Medicare Administrative Contractor for almost all of the services that its residents receive during the course of a covered Part A stay. In addition, this provision places with the SNF the Medicare billing responsibility for physical therapy, occupational therapy, and speech-language pathology services that the resident receives during a noncovered stay. The statute excludes a small list of services from the consolidated billing provision (primarily those of physicians and certain other types of practitioners), which remain separately billable under Part B when furnished to a SNF's Part A resident. A more detailed discussion of this provision appears in section III.G of this final rule.

• *Application of the SNF PPS to SNF services furnished by swing-bed hospitals.* Section 1883 of the Act permits certain small, rural hospitals to enter into a Medicare swing-bed agreement, under which the hospital can use its beds to provide either acute or SNF care, as needed. For critical

access hospitals (CAHs), Part A pays on a reasonable cost basis for SNF services furnished under a swing-bed agreement. However, in accordance with section 1888(e)(7) of the Act, these services furnished by non-CAH rural hospitals are paid under the SNF PPS, effective with cost reporting periods beginning on or after July 1, 2002. A more detailed discussion of this provision appears in section III.H. of this final rule.

B. Requirements of the Balanced Budget Act of 1997 (BBA) for Updating the Prospective Payment System for Skilled Nursing Facilities

Section 1888(e)(4)(H) of the Act requires that we provide for publication annually in the **Federal Register**:

(1) The unadjusted Federal per diem rates to be applied to days of covered SNF services furnished during the upcoming FY.

(2) The case-mix classification system to be applied for these services during the upcoming FY.

(3) The factors to be applied in making the area wage adjustment for these services.

Along with other revisions discussed later in this preamble, this final rule provides these required annual updates to the Federal rates.

C. The Medicare, Medicaid, and SCHIP Balanced Budget Refinement Act of 1999 (BBRA)

There were several provisions in the BBRA (Pub. L. 106–113, enacted on November 29, 1999) that resulted in adjustments to the SNF PPS. We described these provisions in detail in the SNF PPS final rule for FY 2001 (65 FR 46770, July 31, 2000). In particular, section 101(a) of the BBRA provided for a temporary 20 percent increase in the per diem adjusted payment rates for 15 specified groups in the original, 44-group Resource Utilization Groups, version 3 (RUG–III) case-mix classification system. In accordance with section 101(c)(2) of the BBRA, this temporary payment adjustment expired on January 1, 2006, upon the implementation of a refined, 53-group version of the RUG–III system, RUG–53 (see section I.G.1. of this final rule). We included further information on BBRA provisions that affected the SNF PPS in Program Memoranda A–99–53 and A–99–61 (December 1999).

Also, section 103 of the BBRA designated certain additional services for exclusion from the consolidated billing requirement, as discussed in section III.G. of this final rule. Further, for swing-bed hospitals with more than 49 (but less than 100) beds, section 408 of the BBRA provided for the repeal of certain statutory restrictions on length of stay and aggregate payment for patient days, effective with the end of the SNF PPS transition period described in section 1888(e)(2)(E) of the Act. In the final rule for FY 2002 (66 FR 39562, July 31, 2001), we made conforming changes to the regulations at § 413.114(d), effective for services furnished in cost reporting periods beginning on or after July 1, 2002, to reflect section 408 of the BBRA.

D. The Medicare, Medicaid, and SCHIP Benefits Improvement and Protection Act of 2000 (BIPA)

The BIPA (Pub. L. 106–554, enacted December 21, 2000) also included several provisions that resulted in adjustments to the SNF PPS. We described these provisions in detail in the final rule for FY 2002 (66 FR 39562, July 31, 2001). In particular:

- Section 203 of the BIPA exempted CAH swing beds from the SNF PPS. We included further information on this provision in Program Memorandum A–01–09 (Change Request #1509), issued January 16, 2001, which is available online at *http://www.cms.gov/transmittals/downloads/a0109.pdf*.
- Section 311 of the BIPA revised the statutory update formula for the SNF market basket, and also directed us to conduct a study of alternative case-mix classification systems for the SNF PPS. In 2006, we submitted a report to the Congress on this study, which is available online at *http://www.cms.gov/SNFPPS/Downloads/RC_2006_PC-PPSSNF.pdf*.
- Section 312 of the BIPA provided for a temporary increase of 16.66 percent in the nursing component of the case-mix adjusted Federal rate for services furnished on or after April 1, 2001, and before October 1, 2002; accordingly, this add-on is no longer in effect. This section also directed the Government Accountability Office (GAO) to conduct an audit of SNF nursing staff ratios and submit a report to the Congress on whether the temporary increase in the nursing component should be continued. The report (GAO–03–176), which GAO issued in November 2002, is available online at *http://www.gao.gov/new.items/d03176.pdf*.
- Section 313 of the BIPA repealed the consolidated billing requirement for services (other than physical therapy, occupational therapy, and speech-language pathology services) furnished to SNF residents during noncovered stays, effective January 1, 2001. (A more detailed discussion of this provision appears in section VII. of this final rule.)
- Section 314 of the BIPA corrected an anomaly involving three of the RUGs that section 101(a) of the BBRA had designated to receive the temporary payment adjustment discussed above in section I.C. of this final rule. (As noted previously, in accordance with section 101(c)(2) of the BBRA, this temporary payment adjustment expired upon the implementation of case-mix refinements on January 1, 2006.)
- Section 315 of the BIPA authorized us to establish a geographic reclassification procedure that is specific to SNFs, but only after collecting the data necessary to establish a SNF wage index that is based on wage data from nursing homes. To date, this has proven to be unfeasible due to the volatility of existing SNF wage data and the significant amount of resources that would be required to improve the quality of that data.

We included further information on several of the BIPA provisions in Program Memorandum A–01–08 (Change Request #1510), issued January 16, 2001, which is available online at *http://www.cms.gov/transmittals/downloads/a0108.pdf*.

E. The Medicare Prescription Drug, Improvement, and Modernization Act of 2003 (MMA)

The MMA (Pub. L. 108–173, enacted on December 8, 2003) included a provision that resulted in a further adjustment to the SNF PPS. Specifically, section 511 of the MMA amended section 1888(e)(12) of the Act, to provide for a temporary increase of 128 percent in the PPS per diem payment for any SNF residents with Acquired Immune Deficiency Syndrome (AIDS), effective with services furnished on or after October 1, 2004. This special AIDS add-on was to remain in effect until ''* * * the Secretary certifies that there is an appropriate adjustment in the case mix * * * to compensate for the increased costs associated with [such] residents. * * *'' The AIDS add-on is also discussed in Program Transmittal #160 (Change Request #3291), issued on April 30, 2004, which is available online at *http://www.cms.gov/transmittals/downloads/r160cp.pdf*. In the SNF PPS final rule for FY 2010 (74 FR 40288, August 11, 2009), we did not address the certification of the AIDS add-on in that final rule's implementation of the case-mix refinements for RUG–IV, thus allowing the temporary add-on payment created by section 511 of the MMA to remain in effect.

For the limited number of SNF residents that qualify for the AIDS add-on, implementation of this provision

results in a significant increase in payment. For example, using FY 2009 data, we identified less than 3,500 SNF residents with a diagnosis code of 042 (Human Immunodeficiency Virus (HIV) Infection). For FY 2012, an urban facility with a resident with AIDS in RUG–IV group ''HC2'' would have a case-mix adjusted payment of $401.48 (see Table 5) before the application of the MMA adjustment. After an increase of 128 percent, this urban facility would receive a case-mix adjusted payment of approximately $915.37.

In addition, section 410 of the MMA contained a provision that excluded from consolidated billing certain services furnished to SNF residents by rural health clinics (RHCs) and Federally Qualified Health Centers (FQHCs). (Further information on this provision appears in section III.G. of this final rule.)

F. The Affordable Care Act

On March 23, 2010, the Patient Protection and Affordable Care Act, Public Law 111–148, was enacted. Following the enactment of Public Law 111–148, the Health Care and Education Reconciliation Act of 2010 (Pub. L. 111–152, enacted on March 30, 2010) amended certain provisions of Public Law 111–148 and certain sections of the Social Security Act and, in certain instances, included ''freestanding'' provisions (Pub. L. 111–148 and Pub. L. 111–152 are collectively referred to in this final rule as ''the Affordable Care Act''). Section 10325 of the Affordable Care Act included a provision involving the SNF PPS. Section 10325 postponed the implementation of the RUG–IV case-mix classification system published in the FY 2010 SNF PPS final rule (74 FR 40288, August 11, 2009), requiring that the Secretary not implement the RUG–IV case-mix classification system before October 1, 2011. Notwithstanding this postponement of overall RUG–IV implementation, section 10325 further specified that the Secretary implement, effective October 1 2010, the changes related to concurrent therapy and the look-back period that were finalized as components of RUG–IV (see 74 FR 40315–19, 40322–24, August 11, 2009). As we noted in the FY 2011 SNF PPS Notice with Comment Period (75 FR 42889), implementing the particular combination of RUG–III and RUG–IV features specified in section 10325 of the Affordable Care Act would require developing a revised grouper, something that could not be accomplished by that provision's effective date (October 1, 2010) without risking serious disruption to providers, suppliers, and State agencies. Accordingly, in the FY 2011 Notice with Comment Period (75 FR 42889), we announced our intention to proceed on an interim basis with implementation of the full RUG–IV case-mix classification system as of October 1, 2010, followed by a retroactive claims adjustment, using a hybrid RUG–III (HR–III) system reflecting the Affordable Care Act configuration, once we had developed a revised grouper that could accommodate it. In that Notice with Comment period, we also invited public comment specifically on our plans for implementing section 10325 of the Affordable Care Act in this manner.

However, section 202 of the Medicare and Medicaid Extenders Act of 2010 (Pub. L. 111–309, enacted December 15, 2010) repealed section 10325 of the Affordable Care Act. Therefore, we leave in place the implementation of the full RUG–IV system as of FY 2011, as finalized in the FY 2010 SNF PPS final rule (74 FR 40288). Moreover, as the repeal of section 10325 of the Affordable Care Act eliminates the need for a subsequent transition to the HR–III system, this renders moot any further discussion of public comments that we had invited on our planned implementation of that transition. In addition, we note that implementation of version 3.0 of the Minimum Data Set (MDS 3.0) has proceeded as originally scheduled, with an effective date of October 1, 2010. The MDS 3.0 RAI Manual and MDS 3.0 Item Set are published on the MDS 3.0 Training Materials Web site, at *http://www.cms.gov/NursingHomeQualityInits/45_NHQIMDS30TrainingMaterials.asp.*

We note that a parity adjustment was applied to the RUG–53 nursing case-mix weights when the RUG–III system was initially refined in 2006, to ensure that the implementation of the refinements would not cause any change in overall payment levels (70 FR 45031, August 4, 2005). A detailed discussion of the parity adjustment in the specific context of the RUG–IV payment rates appears in the FY 2010 SNF PPS proposed rule (74 FR 22236–38, May 12, 2009) and final rule (74 FR 40338–40339, August 11, 2009), in the FY 2011 Notice with Comment Period (75 FR 42892–42893), and in the FY 2012 proposed rule (76 FR 26370 through 26377).

Accordingly, as discussed above, effective October 1, 2010, we implemented and paid claims under the RUG–IV system that was finalized in the FY 2010 SNF PPS final rule. In section III.D. of this final rule, we discuss certain ongoing Affordable Care Act initiatives that relate to SNFs, and in section III.E.1, we discuss proposed revisions involving section 6101 of the Affordable Care Act, regarding required disclosure of ownership and additional disclosable parties information.

G. Skilled Nursing Facility Prospective Payment—General Overview

We implemented the Medicare SNF PPS effective with cost reporting periods beginning on or after July 1, 1998. This methodology uses prospective, case-mix adjusted per diem payment rates applicable to all covered SNF services. These payment rates cover all costs of furnishing covered skilled nursing services (routine, ancillary, and capital-related costs) other than costs associated with approved educational activities and bad debts. Covered SNF services include post-hospital services for which benefits are provided under Part A, as well as those items and services (other than physician and certain other services specifically excluded under the BBA) which, before July 1, 1998, had been paid under Part B but furnished to Medicare beneficiaries in a SNF during a covered Part A stay. A comprehensive discussion of these provisions appears in the May 12, 1998 interim final rule (63 FR 26252).

1. Payment Provisions—Federal Rate

The PPS uses per diem Federal payment rates based on mean SNF costs in a base year (FY 1995) updated for inflation to the first effective period of the PPS. We developed the Federal payment rates using allowable costs from hospital-based and freestanding SNF cost reports for reporting periods beginning in FY 1995. The data used in developing the Federal rates also incorporated an estimate of the amounts that would be payable under Part B for covered SNF services furnished to individuals during the course of a covered Part A stay in a SNF.

In developing the rates for the initial period, we updated costs to the first effective year of the PPS (the 15-month period beginning July 1, 1998) using a SNF market basket index, and then standardized for the costs of facility differences in case mix and for geographic variations in wages. In compiling the database used to compute the Federal payment rates, we excluded those providers that received new provider exemptions from the routine cost limits, as well as costs related to payments for exceptions to the routine cost limits. Using the formula that the BBA prescribed, we set the Federal rates at a level equal to the weighted mean of freestanding costs plus 50 percent of the difference between the freestanding mean and weighted mean of all SNF

costs (hospital-based and freestanding) combined. We computed and applied separately the payment rates for facilities located in urban and rural areas. In addition, we adjusted the portion of the Federal rate attributable to wage-related costs by a wage index.

The Federal rate also incorporates adjustments to account for facility case-mix, using a classification system that accounts for the relative resource utilization of different patient types. The RUG–IV classification system uses beneficiary assessment data from the MDS 3.0 completed by SNFs to assign beneficiaries to one of 66 RUG–IV groups. The original RUG–III case-mix classification system used beneficiary assessment data from the MDS, version 2.0 (MDS 2.0) completed by SNFs to assign beneficiaries to one of 44 RUG–III groups. Then, under incremental refinements that became effective on January 1, 2006, we added nine new groups—comprising a new Rehabilitation plus Extensive Services category—at the top of the RUG–III hierarchy. The May 12, 1998 interim final rule (63 FR 26252) included a detailed description of the original 44-group RUG–III case-mix classification system. A comprehensive description of the refined RUG–53 system appeared in the proposed and final rules for FY 2006 (70 FR 29070, May 19, 2005, and 70 FR 45026, August 4, 2005), and a detailed description of the current 66-group RUG–IV system appeared in the proposed and final rules for FY 2010 (74 FR 22208, May 12, 2009, and 74 FR 40288, August 11, 2009).

Further, in accordance with sections 1888(e)(4)(E)(ii)(IV) and (e)(5) of the Act, the Federal rates in this final rule reflect an update to the rates that we published in the notice with comment period for FY 2011 (75 FR 42886, July 22, 2010) and the associated correction notice (75 FR 55801, September 14, 2010), equal to the full change in the SNF market basket index, adjusted by the forecast error correction, if applicable, and the Multifactor Productivity (MFP) adjustment for FY 2012. A more detailed discussion of the SNF market basket index and related issues appears in sections I.G.2. and III.F. of this final rule.

2. FY 2012 Rate Updates Using the Skilled Nursing Facility Market Basket Index

Section 1888(e)(5) of the Act requires us to establish a SNF market basket index that reflects changes over time in the prices of an appropriate mix of goods and services included in covered SNF services. We use the SNF market basket index, adjusted in the manner described below, to update the Federal rates on an annual basis. In the SNF PPS final rule for FY 2008 (72 FR 43425 through 43430, August 3, 2007), we revised and rebased the market basket, which included updating the base year from FY 1997 to FY 2004. The FY 2012 market basket increase is 2.7 percent, which is based on IHS Global Insight, Inc. (IGI) second quarter 2011 forecast with historical data through first quarter 2011.

In addition, as explained in the final rule for FY 2004 (66 FR 46058, August 4, 2003) and in section III.F.2. of this final rule, the annual update of the payment rates includes, as appropriate, an adjustment to account for market basket forecast error. As described in the final rule for FY 2008, the threshold percentage that serves to trigger an adjustment to account for market basket forecast error is 0.5 percentage point effective for FY 2008 and subsequent years. This adjustment takes into account the forecast error from the most recently available FY for which there is final data, and applies whenever the difference between the forecasted and actual change in the market basket exceeds a 0.5 percentage point threshold. For FY 2010 (the most recently available FY for which there is final data), the estimated increase in the market basket index was 2.2 percentage points, while the actual increase was 2.0 percentage points, resulting in the actual increase being 0.2 percentage point lower than the estimated increase. Accordingly, as the difference between the estimated and actual amount of change does not exceed the 0.5 percentage point threshold, the payment rates for FY 2012 do not include a forecast error adjustment. As we stated in the final rule for FY 2004 that first promulgated the forecast error adjustment (68 FR 46058, August 4, 2003), the adjustment will ''* * * reflect both upward and downward adjustments, as appropriate.'' Table 1 shows the forecasted and actual market basket amounts for FY 2010.

TABLE 1—DIFFERENCE BETWEEN THE FORECASTED AND ACTUAL MARKET BASKET INCREASES FOR FY 2010

Index	Forecasted FY 2010 increase *	Actual FY 2010 increase **	FY 2010 difference
SNF	2.2	2.0	−0.2

* Published in **Federal Register**; based on second quarter 2009 IHS Global Insight Inc. forecast (2004-based index).
** Based on the second quarter 2011 IHS Global Insight forecast, with historical data through the first quarter 2011 (2004-based index).

Furthermore, effective FY 2012, as required by section 3401(b) of the Affordable Care Act, the market basket percentage is reduced by a productivity adjustment equal to ''the 10-year moving average of changes in annual economy-wide private nonfarm business multi-factor productivity (as projected by the Secretary for the 10-year period ending with the applicable fiscal year, year, cost-reporting period or other annual period)'' (the MFP adjustment). As discussed in greater detail in section III.F.3 of this final rule, the MFP adjustment for FY 2012 is 1.0 percent.

II. Summary of the Provisions of the FY 2012 Proposed Rule

In the FY 2012 proposed rule (76 FR 26364), we presented two options for updating the payment rates used under the prospective payment system for skilled nursing facilities (SNFs), for fiscal year 2012. In this context, we examined recent changes in provider behavior relating to the implementation of the Resource Utilization Groups, version 4 (RUG–IV) case-mix classification system and considered a possible recalibration of the case-mix indexes so that they more accurately reflect parity in expenditures between RUG–IV and the previous case-mix classification system. We also included a discussion of a Non-Therapy Ancillary component and outlier research currently under development within CMS. In addition, the proposed rule discussed the impact of certain provisions of the Affordable Care Act. We proposed to require for fiscal year 2012 and subsequent fiscal years that the SNF market basket percentage change be reduced by the multi-factor productivity adjustment. We also proposed to require Medicare SNFs and Medicaid nursing facilities to disclose certain information to the Secretary of

the United States Department of Health and Human Services (the Secretary) and other entities regarding the ownership and organizational structure of their facilities. Finally, we proposed certain changes relating to the payment of group therapy services and proposed new resident assessment policies.

III. Analysis of and Responses to Public Comments on the FY 2012 Proposed Rule

In response to the publication of the FY 2012 proposed rule, we received over 170 timely public comments from individual providers, corporations, government agencies, private citizens, trade associations, and major organizations. The following are brief summaries of each proposed provision, a summary of the public comments that we received related to that proposal, and our responses to the comments.

A. General Comments on the FY 2012 Proposed Rule

In addition to the comments we received on the proposed rule's discussion of specific aspects of the SNF PPS (which we address later in this final rule), commenters also submitted the following, more general observations on the payment system. We received many comments expressing concern about the SNF PPS system as a whole and the MDS 3.0 and RUG–IV system.

Comment: We received a number of comments raising concerns about the complexity of the MDS 3.0 that included several new assessment types, the need to clarify the RAI manual, and the time required to become trained on the new MDS 3.0 requirements.

Response: We appreciate these concerns and we recognize that the transition to the MDS 3.0 was complex and labor-intensive. We provided extensive training and opportunities to assist with questions about the MDS 3.0 and RUG–IV models both prior to and after its October 1, 2010 implementation on audio conferences, at national training conferences, in the form of the RAI Manual and subsequent clarification updates, and postings to the MDS 3.0 and SNF PPS Web sites. We have also provided support in response to oral and written inquiries, and issued clarification during Open Door Forums, RAI Manual updates, and through online and telephone technical assistance. We are committed to continuing training on both the MDS 3.0 and RUG–IV systems. In fact, we are developing training programs to assist providers to adapt to any new policy changes introduced on and after October 1, 2011. Additionally, as we receive provider input through these efforts, we will continue to update and clarify the RAI manual to ensure that it continues to provide accurate information and guidance on CMS policies.

Comment: One commenter recommended that we address the need for stricter requirements for training and certification of food services directors and staff. The commenter states that stricter guidelines will improve patient health and safety.

Response: We appreciate this comment, but note that the specific issues the commenter raised about the requirements for food services staff relate to the certification standards for long-term care facilities and, therefore, are beyond the scope of this final rule. We have, however, shared these comments with CMS survey and certification staff so that they can consider these suggestions as part of their ongoing review and refinement of our policies.

B. FY 2012 Annual Update of Payment Rates Under the Prospective Payment System for Skilled Nursing Facilities

1. Federal Prospective Payment System

This final rule sets forth a schedule of Federal prospective payment rates applicable to Medicare Part A SNF services beginning October 1, 2011. The schedule incorporates per diem Federal rates that provide Part A payment for almost all costs of services furnished to a beneficiary in a SNF during a Medicare-covered stay.

a. Costs and Services Covered by the Federal Rates

In accordance with section 1888(e)(2)(B) of the Act, the Federal rates apply to all costs (routine, ancillary, and capital-related) of covered SNF services other than costs associated with approved educational activities as defined in § 413.85. Under section 1888(e)(2)(A)(i) of the Act, covered SNF services include post-hospital SNF services for which benefits are provided under Part A (the hospital insurance program), as well as items and services (other than those services excluded by statute) that, before July 1, 1998, were paid under Part B (the supplementary medical insurance program) but furnished to Medicare beneficiaries in a SNF during a Part A covered stay. (These excluded service categories are discussed in greater detail in section V.B.2 of the May 12, 1998 interim final rule (63 FR 26295 through 26297)).

b. Methodology Used for the Calculation of the Federal Rates

The FY 2012 rates reflect an update using the full amount of the latest market basket index reduced by the MFP adjustment. The FY 2012 market basket increase factor is 2.7 percent which, as discussed in section VI.C of this final rule, is reduced by a 1.0 percent MFP adjustment, resulting in an MFP-adjusted market basket percentage of 1.7 percent. A complete description of the multi-step process used to calculate Federal rates initially appeared in the May 12, 1998 interim final rule (63 FR 26252), as further revised in subsequent rules. We note that the temporary increase of 128 percent in the per diem adjusted payment rates for SNF residents with AIDS, enacted by section 511 of the MMA (and discussed previously in section I.E of this final rule), remains in effect.

We used the SNF update factor to adjust each per diem component of the Federal rates forward to reflect cost increases occurring between the midpoint of the Federal FY beginning October 1, 2010, and ending September 30, 2011 (FY 2011), and the midpoint of the Federal FY beginning October 1, 2011, and ending September 30, 2012 (FY 2012), to which the payment rates apply. In accordance with section 1888(e)(4)(E)(ii)(IV) of the Act, we update the payment rates for FY 2012 by a factor equal to the full market basket index percentage increase. As further explained in sections I.G.2 and III.F.2 of this final rule, as applicable, we adjust the market basket index by the forecast error from the most recently available FY for which there is final data and apply this adjustment whenever the difference between the forecasted and actual change in the market basket exceeds a 0.5 percentage point threshold. In addition, as further explained in sections I.G.2 and III.F.3 of this final rule, effective FY 2012 and each subsequent fiscal year, we are required to reduce the market basket percentage by the MFP adjustment. We further adjust the rates by a wage index budget neutrality factor, described later in this section. Tables 2 and 3 reflect the updated components of the unadjusted Federal rates for FY 2012, prior to adjustment for case-mix.

TABLE 2—FY 2012 UNADJUSTED FEDERAL RATE PER DIEM URBAN

Rate component	Nursing—case-mix	Therapy—case-mix	Therapy—non-case-mix	Non-case-mix
Per Diem Amount	$160.62	$120.99	$15.94	$81.97

TABLE 3—FY 2012 UNADJUSTED FEDERAL RATE PER DIEM RURAL

Rate component	Nursing—case-mix	Therapy—case-mix	Therapy—non-case-mix	Non-case-mix
Per Diem Amount	$153.46	$139.51	$17.02	$83.49

2. Case-Mix Adjustments

a. Background

Section 1888(e)(4)(G)(i) of the Act requires the Secretary to make an adjustment to account for case-mix. The statute specifies that the adjustment is to reflect both a resident classification system that the Secretary establishes to account for the relative resource use of different patient types, as well as resident assessment and other data that the Secretary considers appropriate. In first implementing the SNF PPS (63 FR 26252, May 12, 1998), we developed the RUG–III case-mix classification system, which tied the amount of payment to resident resource use in combination with resident characteristic information. Staff time measurement (STM) studies conducted in 1990, 1995, and 1997 provided information on resource use (time spent by staff members on residents) and resident characteristics that enabled us not only to establish RUG–III, but also to create case-mix indexes (CMIs).

Although the establishment of the SNF PPS did not change Medicare's fundamental requirements for SNF coverage, payment levels under the PPS vary based on the patient's anticipated care needs and resource utilization. One of the elements affecting the SNF PPS per diem rates is the case-mix adjustment derived from a classification system based on comprehensive resident assessments using the MDS. Case-mix classification is based, in part, on the beneficiary's need for skilled nursing care and therapy. The case-mix classification system uses clinical data from the MDS, and wage-adjusted staff time measurement data, to assign a case-mix group to each patient record that is then used to calculate a per diem payment under the SNF PPS. Because the MDS is used as the basis for payment as well as a clinical document, we have provided extensive training on proper coding and the time frames for MDS completion in our Resident Assessment Instrument (RAI) Manual. For an MDS to be considered valid for use in determining payment, the MDS assessment must be completed in compliance with the instructions in the RAI Manual in effect at the time the assessment is completed. For payment and quality monitoring purposes, the RAI Manual consists of both the Manual instructions and the interpretive guidance and policy clarifications posted on the appropriate MDS Web site at *http://www.cms.gov/NursingHomeQualityInits/25_NHQIMDS30.asp.*

The original RUG–III grouper logic was based on clinical data collected in 1990, 1995, and 1997. As discussed in the SNF PPS proposed rule for FY 2010 (74 FR 22208, May 12, 2009), we subsequently conducted a multi-year data collection and analysis under the Staff Time and Resource Intensity Verification (STRIVE) project to update the case-mix classification system for FY 2011. The resulting RUG–IV case-mix classification system reflected the data collected in 2006–2007 during the STRIVE project, and was finalized in the FY 2010 SNF PPS final rule (74 FR 40288, August 11, 2009) to take effect in FY 2011 concurrently with an updated new resident assessment instrument, the MDS 3.0, which collects the clinical data used for case-mix classification under RUG–IV.

Under the BBA, each update of the SNF PPS payment rates must include the case-mix classification methodology applicable for the coming Federal FY. As indicated in section I.G of this final rule, the payment rates set forth herein reflect the use of the RUG–IV case-mix classification system from October 1, 2011, through September 30, 2012.

b. Development of Case-Mix Indexes

In the FY 2012 proposed rule (76 FR 26370 through 36377), we discussed the implementation of the RUG–IV classification system, effective October 1, 2010. We also discussed the accompanying parity adjustment that was intended to ensure that estimated total payments under the RUG–IV model would be equal to those payments that would have been made under the 53-group RUG–III model that it replaced. We then explained that actual utilization patterns under the refined case-mix system differed significantly from the initial projections, and as a consequence, rather than achieving parity as intended, this adjustment to the new RUG–IV system triggered a significant increase in overall payment levels under the RUG–IV model, representing substantial overpayments to SNFs.

Accordingly, the FY 2012 proposed rule included a discussion of two options for updating the rates for FY 2012. The first option was to recalibrate the parity adjustment (using the methodology discussed in the FY 2012 proposed rule) to ensure that the adjustment actually achieves its intended purpose, to make the transition from RUG–53 to RUG–IV in a budget neutral manner, as discussed further below. Under the second option, CMS reserved the option not to implement a recalibration of the parity adjustment in FY 2012 if, as additional FY 2011 claims data became available, they indicated that utilization patterns are more consistent with our projections and expenditures are more in parity with those under the RUG–53 model. Under this second option, we stated we would simply update the payment rates for FY 2012 by the FY 2012 market basket adjustment of 2.7 percent, reduced by the MFP adjustment of 1.0 percent, for a net market basket increase factor of 1.7 percent.

As discussed in the FY 2012 proposed rule, the recalibration of the FY 2011 parity adjustment, which formed the basis of the first option discussed above, was initially determined through an analysis of utilization data from the first quarter of FY 2011. The methodology for determining the parity adjustment necessary given utilization patterns observed in the first quarter of FY 2011 is described in the FY 2012 proposed rule (76 FR 26370 through 26377) and follows the same basic methodology described in the FY 2006 SNF PPS

proposed rule (70 FR 29077 through 29079), the FY 2009 SNF PPS proposed rule (73 FR 25923) and the FY 2009 SNF PPS final rule (73 FR 46421–23).

In the FY 2012 proposed rule, we stated that this adjustment was based on a set of data derived from first quarter FY 2011 claims and MDS assessments. We further stated that we would continue to monitor claims data and utilization patterns in FY 2011 to confirm our preliminary assessment of the recalibration that would be necessary to achieve parity between the RUG–53 and RUG–IV models, and would update the parity adjustment accordingly. For this final rule, as further discussed below, we have been able to update the recalibration of the FY 2011 parity adjustment with a data set which includes claims and MDS 3.0 assessments for the first 8 months of FY 2011.

Using the same methodology for determining the recalibration discussed in the FY 2012 proposed rule and approximately 2.2 million claims matched to the MDS 3.0 assessment, representing 8 months (or nearly 3 full quarters) of FY 2011 (from October 1, 2011 through May 31, 2011), we determined that the utilization patterns identified in our analysis of the first quarter FY 2011 data continued throughout the entire 8-month period (these data are available at *http://www.cms.gov/SNFPPS/02_Spotlight.asp*). We then repeated our recalibration calculation using the full 8-month data set, which is available at *http://www.cms.gov/SNFPPS/02_Spotlight.asp.* We found that, while retaining the original 61 percent adjustment to the CMIs assigned to each of the RUG–IV non-therapy groups, the necessary adjustment to the nursing CMIs of the RUG–IV therapy groups would be 19.84 percent, a difference of only .03 percent from the 19.81 percent adjustment discussed in the proposed rule. We believe that this updated analysis confirms our preliminary analysis, and demonstrates effectively that the utilization patterns observed in the first quarter of FY 2011 were not temporary aberrations or the result of a learning curve with respect to the RUG–IV and MDS 3.0 transition, but instead represent a new pattern of provider behavior that differs significantly from expected utilization patterns that were the basis for the original parity adjustment, and which resulted in significant increases in overall payment levels under RUG–IV.

In addition, the increased expenditure levels due to the implementation of the RUG–IV system have been validated by the Office of the Inspector General (OIG) in a separate review of SNF payments during the first 6 months of FY 2011. According to a preliminary analysis by OIG, the utilization trends related to the shifts in the modes of therapy and the classification of high percentages of SNF beneficiaries into the highest-paying RUG–IV groups were even more pronounced in the FY 2011 second quarter (January through April 2011) than in the first quarter (October through December 2010) that was used for the analyses included in the FY 2012 proposed rule (This OIG report is available at *http://oig.hhs.gov/oei/reports/oei-02-09-00204.asp.*)

As we stated in the proposed rule (76 FR 26371), given that the most notable differences between expected and actual utilization patterns occurred within the therapy RUG categories, we believe that rather than applying the new parity adjustment percentage to all nursing CMIs, it is more appropriate to maintain the 61 percent adjustment to the nursing CMIS for the RUG–IV non-therapy groups, and reduce the 61 percent parity adjustment as it applied to the nursing CMIs for the RUG–IV therapy groups.

In the proposed rule, we invited comments on the two options discussed above. A discussion of these comments, including our responses, appears below.

Comment: We received a variety of comments regarding the two options presented in the proposed rule for updating the payment rates for FY 2012. Most commenters were opposed to the option to recalibrate the FY 2011 parity adjustment. Many of these commenters expressed their belief that the recalibration considered in the proposed rule will have a significantly negative impact on facilities and beneficiaries. These commenters believed that the recalibration discussed in the proposed rule should be either withdrawn or significantly reduced.

Response: In light of the previous recalibration of the SNF PPS case-mix indexes in FY 2010, which addressed excess payments associated with the RUG–53 implementation in FY 2006 but only after those excess payments had persisted for several years, we believe it is imperative that we act in a well-considered but expedient manner once excess payments such as those in FY 2011 are identified. Allowing these significant anomalies to persist and failing to take timely action to correct the situation creates instability under the RUG–IV system, in the SNF PPS, and the Medicare program generally, which ultimately affects Medicare beneficiary access and quality of care. As we explained in the FY 2012 proposed rule (76 FR 26370–26373), in recalibrating the CMIs under the RUG–IV model, we expect to restore payments to their appropriate level by correcting an inadvertent increase in overall payments. Because the recalibration is removing an unintended excess payment rather than decreasing an otherwise appropriate payment amount, we do not believe that the recalibration should negatively affect facilities, beneficiaries, or quality of care, or create an undue hardship on providers.

Further, in its March 2011 report to the Congress (available at *http://www.medpac.gov/documents/Mar11_EntireReport.pdf*), MedPAC reports that average Medicare margins have increased for freestanding SNFs since 2005. In 2009, the aggregate Medicare margin for freestanding SNFs, which represent more than 90 percent of all SNF facilities, was 18.1 percent, up from 16.6 percent in 2008 and representing the ninth consecutive year where the aggregate Medicare margin for freestanding SNFs was greater than 10 percent. For these reasons, we believe that the parity adjustment should not be withdrawn or reduced.

Comment: Several commenters asserted that the higher payments observed in FY 2011 were, at least partially, the result of real acuity changes which should be accounted for in the calculation of the parity adjustment. These commenters stated that, as an alternative approach, CMS should consider comparing data from FY 2010 and FY 2011 when calculating the recalibration factor, to account for changes in patient acuity.

Response: We disagree with this comment on the basis that, as described in the FY 2012 proposed rule (76 FR 26371), the same FY 2011 claims and MDS information were used to determine both RUG–III payments and RUG–IV payments. Using the same population for the same timeframe serves to control for acuity level changes, as well as other factors, such as patient volume, across the RUG–III and RUG–IV systems and provide an appropriate comparison for our financial analysis.

We would also note, as discussed further below, that we did a comparison of data from all of FY 2010 and from the first eight months of FY 2011 that did not control for changes in patient acuity, and found that it did not result in a significant difference in the recalibration factor necessary to equalize RUG–IV payments and RUG–III payments. In testing this alternative methodology, we did control for volume by calculating the percentage of FY 2010 days of service for each of the RUG–III groups, broken down by urban and rural days, and then multiplied each

percentage by the total number of urban or rural FY 2011 days of service, as appropriate, to determine the number of days of service for each RUG–III group, relative to the total volume for the first eight months of FY 2011. Therefore, even though the recalibration methodology discussed in the proposed rule (76 FR 26370–73) controls for changes in patient acuity, we note that the alternative approach above which was suggested by commenters would not change the recalibration factor.

Comment: Some commenters asserted that CMS failed to provide sufficient information for a third party to reproduce CMS's conclusions with regard to the parity adjustment. A few commenters stated that the lack of access to data, or the timeframe for when certain data were released, limited the ability of stakeholders to develop substantive comments on the recalibration considered in the proposed rule. Additionally, a few commenters referred to specific requests that were made by a few of the major nursing home trade associations for access to claims and MDS data for the fourth quarter of FY 2010 and the first quarter of FY 2011. They noted that we had declined to fulfill those data requests, due to certain data disclosure requirements in the privacy regulations that were promulgated under the Health Insurance Portability and Accountability Act of 1996 (Pub. L. 104–191, enacted on August 21, 1996) (HIPAA). These commenters asserted that CMS should reconsider its data security policies in light of the use of more ''real–time'' data.

Response: We do not agree with assertions that CMS provided inadequate data to evaluate and comment upon the proposals described in our proposed rule. The methodology used to establish the case-mix adjustments is the same as that described in detail in the FY 2006 SNF PPS proposed rule (70 FR 29077 through 29079), the FY 2009 SNF PPS proposed rule (73 FR 25923), and the FY 2009 SNF PPS final rule (73 FR 46421 through 46422), as updated in the FY 2012 proposed rule (76 FR 26370 through 26377). In addition, the data used to calculate the adjustments are publicly available on the CMS Web site, as explained below. We tested the ability to reproduce the parity adjustment calculation using only information available on the CMS Web site as of May 3, 2011, and in the proposed rule and were able to do so. We used the first quarter FY 2011 days of service for the RUG–IV system and a distribution of what those days would have looked like under RUG–III (available in the Downloads section of our Web site at *http://www.cms.gov/SNFPPS/02_Spotlight.asp*). We multiplied the RUG–IV and RUG–III days of service by the FY 2012 unadjusted Federal per diem payment rate components, multiplied by the unadjusted case-mix indexes (the unadjusted RUG–IV case-mix indexes can be calculated by dividing the adjusted case-mix indexes, provided in the proposed rule in Tables 5A or 6A, by the adjustment factor of 1.1981) to establish expenditures under the RUG–III and RUG–IV systems. The parity adjustment was determined as the percentage increase necessary for the nursing CMIs of the RUG–IV therapy groups to generate estimated expenditure levels under the RUG–IV system that were equal to estimated expenditure levels under the RUG–III system.

While this data alone would have been sufficient for a third party to reproduce our results, in an effort to respond to data requests from stakeholders and give the public as much information as possible to evaluate the two parity adjustment options considered in the proposed rule, we also made available on our Web site, as of June 16, 2011, a distribution of paid days by provider number and by month for the fourth quarter of FY 2010 under RUG–III and the first quarter of FY 2011 under RUG–III and RUG–IV. This data could be used to allow stakeholders to analyze acuity trends and further evaluate the adequacy of the data used to determine the appropriate recalibration. Finally, we posted on our Web site a detailed memo which outlined how stakeholders could use MDS 3.0 data to determine the appropriate RUG–III group for a given RUG–IV patient, even though this information was also already available to facilities on their final validation reports. Thus, we provided stakeholders and their trade associations with extensive data described earlier, so that they had multiple avenues for analyzing the underlying data and verifying CMS's results. We believe the additional information provided was beyond the information necessary to replicate our calculation. In this way, we provided even greater transparency of our methods and data analysis while fulfilling our data security responsibilities under HIPAA.

Furthermore, with regard to the ability of stakeholders to provide substantive comments, we do not agree with the commenter's statement that the necessary data were released too late to allow for analyses that would generate substantive comment on the proposed rule. As illustrated above, the data provided on the CMS Web site and in the proposed rule were more than sufficient for stakeholders to reproduce, evaluate, and critique the recalibration methodology and results. This is evident in the notable breadth and detail of the commenters' critiques of our supporting data, methodology, and results, which we view as at least in part a reflection of the extensive amount of data that we have made available to the public throughout this process, and of the ability of commenters to provide both timely and substantive comments on the proposed rule. Even after the issuance of the FY 2012 proposed rule, we continued to respond to requests for technical assistance and posted additional technical materials on our Web site so that all stakeholders could have access to the responses to the technical questions that we received.

Certain data, such as specific MDS and claims data requested by certain trade associations, could not be made available upon the request of stakeholders. CMS' data security policy, which derives from our responsibilities under HIPAA, does not allow CMS to release patient identifiable data when such data are not necessary to accomplish the purpose of the disclosure (here, analyzing our proposals). As noted above, these data were not necessary to provide substantive and timely comments on the proposals contained in the proposed rule, as evidenced by the ability of internal staff to replicate and verify the results of our calculation using data available on our Web site well before the end of the comment period. Accordingly, as the non-patient identifiable information was itself adequate for purposes of assessing our proposals, we were not able to release the requested patient identifiable information.

That said, CMS does make certain information available from the claims and MDS files. CMS has an established timeline for the release of such information, which normally allows for up to a year after the data have been finalized in order to screen and cleanse the data properly of anything that would permit patient identification. Any attempt to speed up this process would result in the assumption of unacceptable risks that patient-identifiable information would be released by mistake, which would threaten the basic privacy protections that beneficiaries must be afforded. Finally, as discussed above, some commenters suggested that, given our increased use of more real-time data (that is, data from the current fiscal year as opposed to claims data

from a prior year) for our recalibration analyses, we should consider updates to our data security policies to ensure that stakeholders have adequate access to data and that the rulemaking process is as transparent as possible. We agree that the process should remain transparent, but we also note that the data security policies that cover the patient-level claims and MDS data used as the basis of the parity adjustment recalibration implemented in this final rule are required by the HIPAA privacy regulations and exist first and foremost to protect Medicare beneficiaries. While commenters requested certain claims and MDS data in order to evaluate our recalibration results, assumptions, and methodology, as discussed above, the data requested were not necessary to provide substantive and timely comments on the proposals contained in the proposed rule so we were unable to provide such data under the HIPAA privacy rule's ''minimum necessary'' provisions. As we stated above, we believe the data we provided on the CMS Web site and in the proposed rule were more than sufficient for stakeholders to reproduce, evaluate, and critique the recalibration methodology and results. We will continue to make data available to stakeholders within the limits of the law. Finally, we have updated the data on our Web site to reflect the use of the eight months of data used to finalize this rule.

Comment: Many commenters raised general concerns over the data used to determine the appropriate recalibration of the FY 2011 parity adjustment. Many of these commenters believed that one fiscal quarter of data was insufficient to justify a recalibration of the magnitude discussed in the proposed rule and that CMS should wait until it has a greater set of data from which to draw conclusions about utilization patterns in FY 2011. Several commenters were concerned that, given the increased burden associated with transitioning both to RUG–IV and MDS 3.0 simultaneously, it is possible that the first quarter of FY 2011 may represent facilities working to transition properly rather than accurately representing evolving provider behavior. One commenter specifically stated that using one quarter of data would not adequately control for the possibility of ''seasonality'' in SNF PPS claims submission, payments, and acuity levels, and provided a detailed analysis of previous fiscal quarters to demonstrate the possibility of a difference between the first fiscal quarter of a given year and the remainder of that year. One commenter also raised concerns related to the provider-level data that CMS made available to stakeholders upon their request, specifically that the data provided for a certain set of providers did not match the data that this commenter acquired independently for this provider. A few commenters highlighted potential calculation errors in the analysis and data presented in the proposed rule, with one commenter specifically highlighting an error in the calculation of the nursing CMI for a certain non-therapy RUG–IV group.

Response: We acknowledge the commenters' concerns about relying solely on one fiscal quarter of data to finalize a recalibration of the magnitude discussed here. However, as noted in the proposed rule, the first quarter of data served only as the basis for our preliminary analysis of FY 2011 utilization. In the proposed rule, we committed to monitoring FY 2011 utilization data continually to confirm the results of our preliminary analysis regarding the need to recalibrate the parity adjustment. The stated purpose of the discussion of this first quarter FY 2011 data in the proposed rule was to ''provide the public with information on the potential scope and impact of the recalibration'' we considered in the proposed rule (76 FR 26371). Given that we have updated the data file with claims and MDS assessments ranging over 8 months of FY 2011 and for the reasons outlined below, we believe that the utilization patterns observed as part of our preliminary analysis do, in fact, represent an accurate reflection of utilization for the whole of FY 2011.

Additionally, as stated above, we have now updated the recalibration based on 8 months of FY 2011 data, and utilization patterns are virtually identical to FY 2011 first quarter findings (Data available at *http://www.cms.gov/SNFPPS/02_Spotlight.asp*). Therefore, we believe that observed utilization patterns are more likely the result of evolving provider behavior rather than errors and adjustments made during the early transition period to RUG–IV and MDS 3.0. Moreover, since facilities were given more than one year to prepare for the implementation of both RUG–IV and MDS 3.0, we believe that facilities were given ample time for education and preparation for the transition and that any confusion or mistakes due to transition issues would have been addressed prior to, or in the very early stages of, the RUG–IV and MDS transition.

With regard to commenters' claims related to ''seasonality'' of the first quarter FY 2011 data, our own analysis of FY 2010 claims data demonstrated that the first quarter of a given fiscal year does appear to provide a reasonable approximation of patient acuity levels and payments for the whole of that fiscal year. We reviewed the FY 2010 claims by RUG classification and by month for each month of FY 2010. Ultimately, we found that the distribution of RUG groups remained stable over the year and no particular quarter, or even month, stood out as demonstrating a different RUG distribution from the rest of that year (these data are available at *http://www.cms.gov/SNFPPS/02_Spotlight.asp*). In fact, the only real difference in SNF payment levels occurs in the transition between one fiscal year and another, where this difference is attributable to the annual payment update and market basket adjustment rather than to any ''seasonality'' existing between the fourth quarter of a given fiscal year and the first quarter of the following fiscal year.

Finally, with regard to the comment related to the provider-level data, we were unable to verify this commenter's claim as we were not provided with any details as to the location or type of provider in question. After a review of the data used to support the recalibration, we found the underlying data to be accurate, and sufficient to perform the proper calculation of the recalibration. We did identify one RUG category (LB2) where we incorrectly stated the nursing CMI as 1.46 in the proposed rule, when it should be 1.45. This correction, while it would have a very small effect on the per diem payment for that RUG group, did not have any impact on our calculation of the parity adjustment. This error has since been corrected and tables 5 and 6 in this final rule reflect the correct nursing CMI for LB2.

Comment: Many commenters expressed concern over the possibility of a reduction to Medicare payment rates in light of other reductions in areas such as Medicaid. Some commenters stated that Medicare should maintain SNF payment levels to cross-subsidize what they characterized as inadequate payment rates for nursing facilities under the Medicaid program. Other commenters urged CMS to reconsider the recalibration in light of the potential impact on the weak national economy. A few commenters discussed the importance of the health care industry, specifically SNFs, as representing a significant sector of job growth during the recent economic recession. Finally, a few commenters asserted that the recalibration would drive providers into bankruptcy, as they assert happened

when the SNF PPS was initially implemented in the late 1990s.

Response: We wish to clarify that it is not the appropriate role of the Medicare SNF benefit to cross-subsidize nursing home payments made under the Medicaid program. As noted by several commenters, the primary purpose of the Medicare SNF benefit is to provide accurate payment for Medicare Part A services provided in a SNF setting. Further, we note that MedPAC has also indicated that it is inappropriate for the Medicare program's SNF payments to be used to account for Medicaid shortfalls. Specifically, on page 159 of its March 2011 Report to Congress on Medicare Payment Policy (which is available online at *http://www.medpac.gov/documents/Mar11_EntireReport.pdf*), MedPAC stated:

* * * the Commission believes such cross-subsidization is not advisable for several reasons. First, on average, Medicare payments account for less than a quarter of revenues to freestanding skilled nursing facilities. A cross-subsidization policy would use a minority share of Medicare payments to underwrite a majority share of states' Medicaid payments. Second, raising Medicare rates to supplement low Medicaid payments would result in poorly targeted subsidies. Facilities with high shares of Medicare payments—presumably the facilities that need revenues the least—would receive the most in subsidies from the higher Medicare payments, while facilities with low Medicare shares—presumably the facilities with the greatest need—would receive the smallest subsidies. Third, increased Medicare payment rates could encourage states to further reduce their Medicaid payments and, in turn, create pressure to raise Medicare rates. In addition, a Medicare subsidy would have an uneven impact on payments, given the variation across states in the level and method of paying for nursing home care. In States where Medicaid payments were adequate, the subsidy would add to excessive payments. Last, higher Medicare payments could further encourage providers to select patients based on payer source or to rehospitalize dual-eligible patients to qualify them for a Medicare-covered, higher payment stay.

We agree with MedPAC, and therefore, do not agree with the commenters that cited cross-subsidizing Medicaid as a justification for maintaining Medicare SNF payments at any specific level.

We are also aware of the concerns that reductions in payment levels can have a negative impact on SNFs and the quality of care furnished to nursing home patients across the country. However, in this particular case, the recalibration discussed in the proposed rule and finalized in this final rule corrects, on a prospective basis only, the unintended excess payment that we observed for FY 2011. In addition, even with the recalibration, FY 2012 rates will still be 3.4 percent higher than FY 2010 rates, the period immediately preceding the introduction of RUG–IV and the unintended spike in payments. Also, FY 2010 expenditures increased by 4.8 percent over FY 2009, a period where both MedPAC and CMS have calculated margins for free-standing SNFs to average 18.1 percent. Moreover, we have not proposed any action to recoup retroactively the excess expenditures already made to SNFs during FY 2011. Instead, we are limiting the scope of the recalibration to restoring the intended SNF PPS payment levels on a prospective basis only effective October 1, 2011.

We have also considered the concerns raised by commenters that restoring the intended payment levels will result in job losses and add significant burden to health care workers and States. CMS cost report and Online Survey Certification and Reporting System (OSCAR) data show that, for the majority of freestanding SNFs and SNFs that operate as part of chains, there has been little change in staffing with the implementation of RUG–IV. Therefore, as data do not indicate that facilities increased staffing with the implementation of RUG–IV and aggregate payments will return to a level commensurate with those made under RUG–III, we do not believe that restoring payments to their intended and appropriate levels should necessarily result in job losses or add significant burden to health care workers or States.

As regards the comment that CMS should reconsider the recalibration in light of the potential impact on a weak economy, we do not believe that potential economic effects justify perpetuating observed and acknowledged excessive and inaccurate payments. Again, we note that MedPAC found in 2009 that the aggregate Medicare margin for freestanding SNFs, which represent more than 90 percent of all SNF facilities, was 18.1 percent, up from 16.6 percent in 2008 and representing the ninth consecutive year where the aggregate Medicare margin for freestanding SNFs was greater than 10 percent.

Finally, with regard to those comments which asserted that the recalibration would trigger bankruptcies similar to those that they attributed to the implementation of the SNF PPS in the late 1990s, studies have indicated multiple factors for nursing home closures during that time, such as chain membership, investment decisions in an uncertain market, and market competition. A more detailed analysis of the research in this area appears in the FY 2010 final rule (74 FR 40297 through 40298). Ultimately, the existing body of research fails to indicate that case-mix reimbursement is a significant contributor to nursing home bankruptcy, particularly considering the small percentage of facility revenues which derive from Medicare payments. Thus, we do not agree with those commenters who asserted that the recalibration, in and of itself, could lead to the bankruptcy of SNF providers or that it could create the degree of fiscal pressure that could impact negatively on facility staffing or the quality of care in SNFs.

Comment: Many commenters, while conceding that overpayments in FY 2011 do exist, questioned the magnitude of the recalibration deemed appropriate by CMS. Several commenters expressed concern with the distribution of RUG–III payment days used by CMS to calculate the parity adjustment. These commenters stated that the RUG–III distribution of days posted by CMS appeared to show incorrectly a decline in patient acuity (particularly in the case of Rehabilitation plus Extensive Services RUG groups) and that this apparent decline in patient acuity may have been due to flaws in the crosswalk methodology. These commenters believed that this led to an underestimation of RUG–III payments, thereby causing an overestimation of the necessary parity adjustment. A few commenters identified the methodology used by CMS to crosswalk between MDS 3.0 data and RUG–III group classification as potentially introducing certain biases and errors into the parity adjustment calculation. One commenter specifically referred to a potential inaccuracy in the crosswalk methodology as it related to ADL conversions, the depression scale used under MDS 2.0 and MDS 3.0, and certain MDS items (such as IV medications) which required facilities to ''look-back'' to services received during the patient's qualifying hospital stay.

Response: As stated above, several commenters suggested that the distribution of RUG–III payment days (which were derived from MDS 3.0 assessments submitted in FY 2011 or through review of final validation reports available to stakeholders) which appeared to reflect an apparent drop in patient acuity between FY 2010 and FY 2011, actually reflected a flaw in the crosswalk methodology used by CMS. In response to this comment and in response to the comments suggesting a potential inaccuracy in the RUG–III crosswalk, we conducted a detailed

analysis of this potential issue. We first confirmed that the physical programming for the crosswalk file was correct and found no errors in the programming. We then turned our attention to policy and assessment differences between the RUG–III and RUG–IV systems that could be affected by the simultaneous transition to MDS 3.0.

We identified a few areas where using the MDS 3.0 could possibly affect the determination of a patient's case-mix classification under RUG–III or RUG–IV. The first area was a difference on the depression scale used under MDS 2.0 and MDS 3.0 where we found, through an analysis of MDS data from July 2010 through April 2011, that the number of depression cases triggered under MDS 2.0 was greater than the number of depression cases triggered under MDS 3.0 by approximately 6.6 percent. However, since depression plays a small role in the determination of a patient's RUG classification (using either the MDS 2.0 FY 2010 data or the MDS 3.0 FY 2011 data, approximately 2 percent of all Medicare beneficiaries classified into RUG–III groups where depression was a qualifying factor), this difference would not have a significant impact on the RUG–III distribution or parity adjustment recalibration. We also examined the ADL scale used under MDS 2.0 and MDS 3.0 for the same period described above and found that the mean ADL scale score between the two assessments was virtually identical; that is, patients classified into the same ADL categories under both models. Therefore, the ADL scale could not be a source of differences in classification due to using the crosswalk.

Next, we examined the use of OMRAs, particularly the End of Therapy (EOT) OMRA and its accompanying policies. Specifically, under MDS 2.0, facilities could be paid at a therapy rate for 8 to 10 days after the discontinuation of all therapies before the EOT OMRA would be necessary. Under MDS 3.0, the ARD for the EOT OMRA must be set for 1 to 3 days after the discontinuation of all therapies, and the relevant non-therapy RUG rate is paid from the date that therapy was discontinued. We agree that the program used to estimate RUG–III payments did not adjust for the change in the EOT policy. Instead, any change from a therapy RUG group to a non-therapy RUG group that would normally result from the completion of an EOT OMRA, specifically under MDS 2.0, would only be picked up on the next scheduled MDS 2.0 assessment. As a result, the crosswalk in this case may have led to an overestimation of RUG–III payments, which would mean that we actually could have underestimated the parity adjustment necessary to bring RUG–IV payments in line with RUG–III payments.

Finally, one commenter specifically referred to a potential issue with the RUG–III crosswalk related to capturing IV services provided to SNF residents during the resident's qualifying hospital stay. The commenter stated that the crosswalk did not accurately account for these services, leading to an underestimation of RUG–III payments. Based on comments we received, we reviewed MDS assessment data related to the coding of IV medications received by the patient prior to admission to the SNF. After a review of MDS data from July 2010 through April 2011, we did find a significant drop in coding for IV services received prior to the resident's admission to the SNF between FY 2010 and FY 2011. However, given the lack of data, it would be very difficult to ascertain if this drop is the result of facilities admitting a lower volume of beneficiaries who had an IV while in the qualifying hospital stay or, as one commenter suggested, that it stemmed from the elimination of a payment incentive for collecting data from the prior hospital stay and failure to report this item accurately on the MDS 3.0. While this item would not affect the patient's RUG–IV classification, it would be necessary to provide an accurate classification of that patient into a RUG–III category, which is an essential aspect of the recalibration calculation. We note that many commenters believed that patient acuity likely did not drop from FY 2010 to FY 2011. Thus, it is possible that, as one commenter posited, some facilities failed to report accurately on the MDS 3.0 if the patient had received an IV prior to admission to the SNF, due to the elimination of the payment incentive for reporting this item. However, we do not have the data to confirm the basis for the drop in coding IV services.

We considered the potential impact of inaccurate reporting of IVs and other potential crosswalk issues, as described above. However, as stated above, it is impossible to ascertain the cause and extent of any observed reporting differences or to quantify the impact of the reporting change on aggregate expenditure levels. However, in order to approximate the impact of these coding changes, we compared the actual RUG–IV payments from first quarter FY 2011 with a data set from the fourth quarter of FY 2010 that included payments that were actually calculated under the RUG–III system. We found that the necessary recalibration using this much less precise methodology was remarkably similar to the recalibration results discussed in section III.B.2 of this final rule. In fact, these results were within 1.5 percent of the recalibration calculation performed using the FY 2011 data. It should be noted that by using different data sets for the comparisons, we could not control for acuity changes or any other factors, such as patient volume, but the difference in the final result was very minor. Therefore, we believe that any actual issues with the RUG–III crosswalk would have a negligible effect on the recalibration calculation. Moreover, because we cannot determine reliably whether the difference in observed versus historically predicted use of IVs during a patient's qualifying hospital stay reflects actual provider behavior and patient acuity changes, or merely a failure on the part of facilities to complete certain items on the MDS, we believe that an adjustment for any such potential factors would be inappropriate given its limited impact. We expect that facilities will report all necessary items on the MDS to capture accurately the patient's clinical and medical needs, rather than only coding those items relevant to the patient's payment level. Finally, we note that, as we discussed previously, we believe using FY 2011 data to determine the necessary recalibration factor controls for patient acuity, as the recalibration of the parity adjustment compares payments under the two case-mix systems using data from the same time period (FY 2011).

Comment: Many commenters questioned the appropriateness of the recalibration based on the potential impact of other proposed changes discussed in the proposed rule, such as the allocation of group therapy and other changes to the MDS 3.0. These commenters stated that reducing payments through a recalibration of the CMIs without accounting for the potential impact of other changes to the MDS will constitute a ''double hit'' on facilities. Some commenters requested that the recalibration be withdrawn until the impact of these other changes proposed for FY 2012 is better known.

Response: As illustrated by OACT baseline expenditure data from 2006 through 2011 (which can be ascertained by dividing the aggregate dollar impact of a rule for a given year by the aggregate percent impact listed in the impact table for the same rule), the SNF baseline has increased by over 40 percent between 2006 and 2011. Additionally, for 3 of the past 6 years, specifically in FY 2006, FY 2010, and FY 2011, we have attempted to restore budget neutrality in the transition to a

new case-mix classification system by applying a parity adjustment. In both case-mix transitions (from RUG–44 to RUG–53 and from RUG–53 to RUG–IV), we found that, rather than achieving budget neutrality, application of the parity adjustment to the new case-mix system resulted in excess payments to providers, because actual utilization patterns under the new case-mix system were different than we originally projected, thus necessitating a recalibration of the adjustment. After reviewing the effect of the FY 2011 RUG–IV policies, we have found that despite the adoption of clinical policies and coding changes, utilization patterns (as evidenced by the distribution of RUG groups) have not changed significantly in response to these policy revisions in ways that could be expected based on past operational and reporting practices. For example, while we anticipated certain changes in the case-mix distribution in response to the implementation of RUG–IV and the allocation of concurrent therapy along with several other policy and reporting changes, the percentage of residents classified into a rehab category between FY 2010 and FY 2011 remained stable at approximately 92 percent; moreover, the percentage of patients classified into the highest paying rehabilitation RUG category, Ultra High Rehabilitation, actually increased from 43 percent to 45 percent over the same period.

This analysis revealed that it can be difficult to predict provider behavior in response to any given policy changes. As a result, given the ability of facilities and stakeholders to adapt quickly to the changes in the SNF system in ways that maintain payments and consistent utilization patterns, from a practical and policy perspective, we do not believe it would be appropriate to attempt to consider the potential impact of other policy changes for FY 2012 as part of the FY 2011 recalibration calculation. Accordingly, given that it is unclear whether the FY 2012 changes to the MDS will have an effect on utilization patterns and the extent of any such effect, we do not agree that recalibrating the CMIs without accounting for such changes would necessarily result in a ''double hit.''

Further, consistent with past practice during a major case-mix system transition (that is, the transition from RUG–44 to RUG–53 in FY 2006 and the transition from RUG–53 to RUG–IV in FY 2011), aggregate payments under the new system have been adjusted to ensure parity with payments under the previous system. In the case of the transition from RUG–44 to RUG–53, the data used to recalibrate the parity adjustment were based on data from CY 2006 (the year the transition was first implemented), even though the recalibration was not made until FY 2010. As such, major changes in the SNF PPS case-mix classification system have been historically accompanied by a parity adjustment recalibration which uses data from the year in which the transition took place. In this case, consistent with past practice, the most appropriate data for recalibrating the FY 2011 parity adjustment are data from FY 2011, the year in which RUG–IV was implemented. If we were to use data from other years (including projected data for a future year such as FY 2012), this could skew the results due to changes in patient acuity, volume, or provider behavior, or other changes in SNF PPS policy.

Accordingly, because the policy refinements contained in this final rule (such as those related to the MDS 3.0) would apply starting in FY 2012, we believe that these changes should not be factored into the FY 2011 recalibration. As discussed above, we believe that it would be inappropriate to try to manipulate the FY 2011 recalibration to account for potential and unpredictable changes in payments resulting from policies to be implemented in FY 2012. As in prior years, policy refinements that do not constitute changes to the case-mix classification system as a whole are not necessarily made in a budget-neutral manner. Consistent with our past practice when implementing new policies, we will monitor utilization patterns and provider behaviors in response to the changes discussed in this final rule.

Comment: Several commenters suggested that CMS consider the possibility of phasing-in a recalibration over the course of several years. A few commenters further suggested that such a phase-in should also take into account the effects of any finalized FY 2012 policies.

Response: As discussed in section XII.A.5 of the proposed rule, we considered how the recalibration might be implemented so as to mitigate the economic impact of the recalibration on facilities. Specifically, we considered mitigating the impact of the recalibration by phasing in the negative adjustments prospectively over multiple years until parity was achieved. However, as noted in the proposed rule (76 FR 26404), phasing-in the recalibration would continue to reimburse facilities at levels that significantly exceed intended SNF payments. Further, as discussed in response to a preceding comment and elsewhere in this preamble, MedPAC found in 2009 that the aggregate Medicare margin for freestanding SNFs, which represent more than 90 percent of all SNF facilities, was 18.1 percent, up from 16.6 percent in 2008. Given these high Medicare margins, we do not believe that a phase-in approach is justified. It is also important to note that this recalibration would serve to remove an unintended spike in payments rather than decreasing an otherwise appropriate payment amount. Thus, we do not believe that the recalibration should negatively affect facilities, beneficiaries, or quality of care, or create an undue hardship on providers. In fact, notwithstanding the recalibration, the FY 2012 payment rates will actually be higher than the rates established for FY 2010, the period immediately preceding the unintended spike in payment levels. We continue to believe that in implementing RUG–IV, it is essential that we stabilize the baseline as quickly as possible without creating a significant adverse effect on the industry or to beneficiaries.

Furthermore, in response to the comment suggesting that a phase-in should take into account the effects of other policies finalized in FY 2012, as discussed in response to the previous comment, we do not believe it would be appropriate to take into account in the recalibration calculation, potential and unpredictable changes in payments resulting from policies to be implemented in FY 2012.

Comment: Several commenters stated that a shift in patients from Inpatient Rehabilitation Facilities (IRFs) to SNFs results in savings to the Medicare Trust Fund and that the current SNF spending levels are needed to treat higher-acuity patients that are now being treated in SNFs rather than in IRFs. Also, several commenters claimed that that providing increased levels of therapy has led to shorter lengths of stay for SNF residents, decreased the rate of hospital readmissions and increased discharges to the community, thereby creating significant savings for the Medicare program.

Response: We note that, in the absence of supporting evidence, and given the significant excess payments identified in FY 2011 and the Medicare profit margins for facilities identified by various sources, such as MedPAC, it is difficult to see how evolving utilization patterns have created savings for the Medicare program. In fact, MedPAC's analysis of recent quality measure data related to rehospitalizations, for example, which appears in their March 2011 Report to Congress (available at *http://www.medpac.gov/documents/Mar11_EntireReport.pdf*), suggests that

quality of care within SNFs has not been improving. On the topic of rehospitalizations, in its March 2011 report, MedPAC states:

''The quality of care furnished to patients during a Medicare-covered SNF stay continued to show mixed results. * * * Since 2000, one outcome measure * * * (the risk-adjusted rate of rehospitalization for any of five care-sensitive conditions) exhibited almost no change.''

Moreover, a basic principle of the SNF PPS is to pay appropriately for the services provided. CMS data are consistent with the commenters' statements that some patients formerly treated within IRFs are now being treated in SNFs. In fact, our data show that a portion of patients needing rehabilitation have always been treated at SNFs and other non-IRF post-acute care settings. The FY 2011 utilization data used to recalibrate the case-mix adjustments reflect an increase in rehabilitation patients, and likely includes patients who alternatively might have been admitted to IRFs prior to CMS enforcement of the IRF coverage criteria and more intensive medical review of IRF claims. However, we do not agree with the commenters' statement that these patients represent a higher level of acuity than the type of patients historically treated in SNFs. For some time, utilization data have demonstrated that nearly 90 percent of all SNF payment days are for rehabilitation services, with over 40 percent of those days falling into the Ultra High Rehabilitation category. For the former IRF patients who are appropriate for SNF care, we must pay the appropriate rate for the SNF services provided and cannot use a reduction in IRF payments as a reason to increase payments to SNFs arbitrarily. It is important to note that, as discussed above, recalibrating the case-mix system does not change the basic SNF PPS structure which provides higher payments for patients using more staff resources and services.

Finally, as one commenter highlighted, shifting IRF patients toward SNF care does not necessarily improve the quality of care provided to the beneficiaries. A March 2005 report in the Archives of Physical Medicine and Rehabilitation (available at *http://www.archives-pmr.org/article/PIIS0003999304012493/abstract*) found that 81.1 percent of IRF patients were discharged to home, compared to 45.5 percent of SNF residents. Additionally, IRF patients appeared to have shorter lengths of stay, averaging approximately a 13-day stay, compared to the average 36-day stay for a SNF resident. Finally, when patients discharged from each setting were reviewed 24 weeks after discharge, IRF patients had consistently better outcomes and displayed a faster rate of recovery. Given these findings, we do not agree with those commenters who would assume that shifting patients from the IRF setting to a SNF setting is necessarily more beneficial to the patient or the Medicare Trust Fund. We do, however, intend to conduct additional research to update these findings with more recent data. Any changes in utilization patterns, length of stay, and/or care outcomes will be addressed during future rule-making.

Comment: We received a number of comments related to our decision to apply the parity adjustment to only the nursing CMIs for therapy RUG–IV groups. Some commenters focused on reasons the parity adjustment should be applied to both the nursing and therapy indexes, while other suggested that the adjustment should be applied to the nursing CMIs for all RUG groups, as it has been applied in the past.

Response: We considered a variety of alternative applications of the parity adjustment, such as applying the adjustment to both the nursing and therapy CMIs, to all the nursing CMIs, or to the therapy CMIs only. However, we still believe it is most appropriate to apply the adjustment to the nursing CMIs within the therapy groups only. Even for RUG–IV therapy groups, the nursing component is a much larger portion of the associated per diem payment. When we tested adjusting only the therapy CMIs, we found that the reduction necessary to achieve parity was so significant as to reduce some of the recalibrated therapy CMIs to nearly a zero index, while reducing the relative differences between therapy groups significantly. To maintain the appropriate relative difference between each therapy group CMI, we found it best to apply the adjustment to the nursing CMIs for those therapy groups. Additionally, as the original parity adjustment discussed in the FY 2011 notice with comment period (75 FR 42886) was applied to the nursing CMIs, we considered it most appropriate to apply a recalibration of that adjustment to the nursing CMIs, albeit of select RUG–IV groups, rather than to apply the recalibration to the therapy CMIs or some combination of the nursing and therapy CMIs.

As discussed in the FY 2012 proposed rule (76 FR 26371), given that the most notable differences between expected and actual utilization patterns occurred within the therapy RUG categories, we believe it most appropriate to recalibrate the parity adjustment only as it applied to the RUG–IV therapy groups. As discussed in the proposed rule (76 FR 26372), we did evaluate the impact of applying a recalibration to all of the nursing CMIs, but found that rates for the complex medical groups were disproportionately affected negatively, in comparison to the therapy groups that represent 90 percent of SNF payment days. Since the vast majority of SNF residents are classified into a RUG–IV therapy group, and because the greatest differences between expected and actual utilization patterns could be found among the RUG–IV therapy groups, we believe that the most appropriate method for applying the recalibration is to apply it only to the RUG–IV therapy groups.

Comment: A few commenters discussed alternative parity adjustment methodologies, and recommended that instead of applying a fixed percentage increase to the nursing CMI (as is done in the case of the parity adjustment discussed in this final rule), we should apply a fixed percentage increase, or decrease presumably, to the final payment rates for each RUG group under the new classification system. CMS would then recalculate the appropriate nursing CMI necessary to reach the new total RUG payment. According to these commenters, this methodology would ensure that the relative difference in payments for each RUG group would remain the same.

Response: We agree that such a methodology would maintain the relative difference in the payments for each RUG category. However, the basic principle of the SNF PPS is to pay accurately for services based on the relative differences in resource and staff costs. The data underlying the RUG–IV CMIs, primarily the STRIVE study, are used to determine the relative difference between RUG groups with regard to their resource use. By applying the parity adjustment to the nursing CMIs, we are able to maintain the relative difference in resource use among the RUG–IV groups, rather than focusing on differences in payment. Ultimately, the prospective nature of the program demands that we focus more on predicting costs through relative utilization of resources, which are represented in the CMIs, rather than focusing solely on maintaining relative differences in the total payments for each RUG group.

Comment: A few commenters recommended that in lieu of or in addition to pursuing a recalibration, CMS should consider greater fraud and abuse monitoring, with one commenter suggesting that CMS consider medical review and audits of FY 2011 claims

and MDS data. One commenter pointed to the lack of program monitoring activities as an indication that there are no problems with the current parity adjustment.

Response: We appreciate these commenters' suggestions regarding the need for greater fraud and abuse monitoring and the need for audits of SNF records. We have increased our fraud and abuse monitoring efforts for SNFs and for the Medicare program in general. In fact, the Office of the Inspector General (OIG) has started a review of the increased frequency with which patients are assigned to the highest therapy groups. As discussed previously, OIG's initial research results also corroborate changes in SNF patterns of care that may have resulted in an inappropriate number of beneficiaries being classified into the highest-paying therapy groups. We will continue to work with OIG and with CMS contractors to provide greater monitoring of SNF utilization and reporting trends. (This research is available at *http://oig.hhs.gov/oei/reports/oei-02-09-00204.asp*.) Nevertheless, while we believe this monitoring activity is necessary, we also believe that it is necessary to implement the recalibration of the parity adjustment in FY 2012 to prevent continued reimbursement in amounts that significantly exceed our intended policy.

Accordingly, for the reasons specified in the FY 2012 proposed rule (76 FR 26370 through 26377) and the reasons discussed in this final rule, we are implementing the option discussed in the proposed rule to recalibrate the parity adjustment to the RUG–IV case-mix indexes to restore the intended parity in overall payments between the RUG–53 model and the RUG–IV model, using the methodology discussed in the proposed rule. As discussed previously, the parity adjustment finalized in this final rule is based on 8 months of FY 2011 claims and MDS 3.0 data. Thus, for FY 2012, the aggregate impact of this recalibration would be the difference between payments calculated using the original FY 2011 total nursing CMI increase for all RUG–IV groups of 61 percent, and payments calculated using the recalibrated total nursing CMI increase for all therapy RUG–IV groups of 19.84 percent, while maintaining the original 61 percent total nursing CMI increase for all non-therapy RUG–IV groups. The total difference is a decrease in payments of $4.47 billion (on an incurred basis) for FY 2012. We also note that the $4.47 billion reduction would be partly offset by the FY 2012 MFP-adjusted market basket update of 1.7 percent, or $600 million, with a net result of a 11.1 percent reduction, or $3.87 billion, in overall payments for FY 2012. As discussed previously, we are implementing the recalibration on a prospective basis beginning October 1, 2011, to restore payments to their intended levels and to end the current outflow of excess dollars. While the original FY 2011 system calibration had to be based on estimated data, this recalibration uses actual FY 2011 RUG–IV claims data, which we believe provide the best picture of the actual resources used under RUG–IV and result in more accurate payment. Consistent with past policy, we will continue to monitor utilization for the rest of FY 2011, but we do not anticipate that the remaining four months of FY 2011 will present a significantly different picture of SNF utilization patterns than using the first 8 months of data.

We list the case-mix adjusted payment rates separately for urban and rural SNFs in Tables 4 and 5, with the corresponding case-mix values. These tables do not reflect the AIDS add-on enacted by section 511 of the MMA, which we apply only after making all other adjustments, such as wage and case-mix.

BILLING CODE 4120–01–P

TABLE 4: RUG-IV Case-Mix Adjusted Federal Rates and Associated Indexes--URBAN

RUG-IV Category	Nursing Index	Therapy Index	Nursing Component	Therapy Component	Non-Case Mix Therapy Component	Non-case Mix Component	Total Rate
RUX	2.67	1.87	$428.86	$226.25		$81.97	$737.08
RUL	2.57	1.87	$412.79	$226.25		$81.97	$721.01
RVX	2.61	1.28	$419.22	$154.87		$81.97	$656.06
RVL	2.19	1.28	$351.76	$154.87		$81.97	$588.60
RHX	2.55	0.85	$409.58	$102.84		$81.97	$594.39
RHL	2.15	0.85	$345.33	$102.84		$81.97	$530.14
RMX	2.47	0.55	$396.73	$66.54		$81.97	$545.24
RML	2.19	0.55	$351.76	$66.54		$81.97	$500.27
RLX	2.26	0.28	$363.00	$33.88		$81.97	$478.85
RUC	1.56	1.87	$250.57	$226.25		$81.97	$558.79
RUB	1.56	1.87	$250.57	$226.25		$81.97	$558.79
RUA	0.99	1.87	$159.01	$226.25		$81.97	$467.23
RVC	1.51	1.28	$242.54	$154.87		$81.97	$479.38
RVB	1.11	1.28	$178.29	$154.87		$81.97	$415.13
RVA	1.10	1.28	$176.68	$154.87		$81.97	$413.52
RHC	1.45	0.85	$232.90	$102.84		$81.97	$417.71
RHB	1.19	0.85	$191.14	$102.84		$81.97	$375.95
RHA	0.91	0.85	$146.16	$102.84		$81.97	$330.97
RMC	1.36	0.55	$218.44	$66.54		$81.97	$366.95
RMB	1.22	0.55	$195.96	$66.54		$81.97	$344.47
RMA	0.84	0.55	$134.92	$66.54		$81.97	$283.43
RLB	1.50	0.28	$240.93	$33.88		$81.97	$356.78
RLA	0.71	0.28	$114.04	$33.88		$81.97	$229.89
ES3	3.58		$575.02		$15.94	$81.97	$672.93
ES2	2.67		$428.86		$15.94	$81.97	$526.77
ES1	2.32		$372.64		$15.94	$81.97	$470.55
HE2	2.22		$356.58		$15.94	$81.97	$454.49
HE1	1.74		$279.48		$15.94	$81.97	$377.39
HD2	2.04		$327.66		$15.94	$81.97	$425.57
HD1	1.60		$256.99		$15.94	$81.97	$354.90
HC2	1.89		$303.57		$15.94	$81.97	$401.48
HC1	1.48		$237.72		$15.94	$81.97	$335.63
HB2	1.86		$298.75		$15.94	$81.97	$396.66
HB1	1.46		$234.51		$15.94	$81.97	$332.42
LE2	1.96		$314.82		$15.94	$81.97	$412.73
LE1	1.54		$247.35		$15.94	$81.97	$345.26
LD2	1.86		$298.75		$15.94	$81.97	$396.66
LD1	1.46		$234.51		$15.94	$81.97	$332.42
LC2	1.56		$250.57		$15.94	$81.97	$348.48
LC1	1.22		$195.96		$15.94	$81.97	$293.87
LB2	1.45		$232.90		$15.94	$81.97	$330.81
LB1	1.14		$183.11		$15.94	$81.97	$281.02
CE2	1.68		$269.84		$15.94	$81.97	$367.75
CE1	1.50		$240.93		$15.94	$81.97	$338.84
CD2	1.56		$250.57		$15.94	$81.97	$348.48
CD1	1.38		$221.66		$15.94	$81.97	$319.57
CC2	1.29		$207.20		$15.94	$81.97	$305.11
CC1	1.15		$184.71		$15.94	$81.97	$282.62
CB2	1.15		$184.71		$15.94	$81.97	$282.62
CB1	1.02		$163.83		$15.94	$81.97	$261.74
CA2	0.88		$141.35		$15.94	$81.97	$239.26
CA1	0.78		$125.28		$15.94	$81.97	$223.19
BB2	0.97		$155.80		$15.94	$81.97	$253.71
BB1	0.90		$144.56		$15.94	$81.97	$242.47
BA2	0.70		$112.43		$15.94	$81.97	$210.34
BA1	0.64		$102.80		$15.94	$81.97	$200.71
PE2	1.50		$240.93		$15.94	$81.97	$338.84
PE1	1.40		$224.87		$15.94	$81.97	$322.78
PD2	1.38		$221.66		$15.94	$81.97	$319.57
PD1	1.28		$205.59		$15.94	$81.97	$303.50
PC2	1.10		$176.68		$15.94	$81.97	$274.59
PC1	1.02		$163.83		$15.94	$81.97	$261.74
PB2	0.84		$134.92		$15.94	$81.97	$232.83
PB1	0.78		$125.28		$15.94	$81.97	$223.19
PA2	0.59		$94.77		$15.94	$81.97	$192.68
PA1	0.54		$86.73		$15.94	$81.97	$184.64

TABLE 5: RUG-IV Case-Mix Adjusted Federal Rates and Associated Indexes--RURAL

RUG-IV Category	Nursing Index	Therapy Index	Nursing Component	Therapy Component	Non-Case Mix Therapy Component	Non-case Mix Component	Total Rate
RUX	2.67	1.87	$409.74	$260.88		$83.49	$754.11
RUL	2.57	1.87	$394.39	$260.88		$83.49	$738.76
RVX	2.61	1.28	$400.53	$178.57		$83.49	$662.59
RVL	2.19	1.28	$336.08	$178.57		$83.49	$598.14
RHX	2.55	0.85	$391.32	$118.58		$83.49	$593.39
RHL	2.15	0.85	$329.94	$118.58		$83.49	$532.01
RMX	2.47	0.55	$379.05	$76.73		$83.49	$539.27
RML	2.19	0.55	$336.08	$76.73		$83.49	$496.30

RUG-IV Category	Nursing Index	Therapy Index	Nursing Component	Therapy Component	Non-Case Mix Therapy Component	Non-case Mix Component	Total Rate
RLX	2.26	0.28	$346.82	$39.06		$83.49	$469.37
RUC	1.56	1.87	$239.40	$260.88		$83.49	$583.77
RUB	1.56	1.87	$239.40	$260.88		$83.49	$583.77
RUA	0.99	1.87	$151.93	$260.88		$83.49	$496.30
RVC	1.51	1.28	$231.72	$178.57		$83.49	$493.78
RVB	1.11	1.28	$170.34	$178.57		$83.49	$432.40
RVA	1.10	1.28	$168.81	$178.57		$83.49	$430.87
RHC	1.45	0.85	$222.52	$118.58		$83.49	$424.59
RHB	1.19	0.85	$182.62	$118.58		$83.49	$384.69
RHA	0.91	0.85	$139.65	$118.58		$83.49	$341.72
RMC	1.36	0.55	$208.71	$76.73		$83.49	$368.93
RMB	1.22	0.55	$187.22	$76.73		$83.49	$347.44
RMA	0.84	0.55	$128.91	$76.73		$83.49	$289.13
RLB	1.50	0.28	$230.19	$39.06		$83.49	$352.74
RLA	0.71	0.28	$108.96	$39.06		$83.49	$231.51
ES3	3.58		$549.39		$17.02	$83.49	$649.90
ES2	2.67		$409.74		$17.02	$83.49	$510.25
ES1	2.32		$356.03		$17.02	$83.49	$456.54
HE2	2.22		$340.68		$17.02	$83.49	$441.19
HE1	1.74		$267.02		$17.02	$83.49	$367.53
HD2	2.04		$313.06		$17.02	$83.49	$413.57
HD1	1.60		$245.54		$17.02	$83.49	$346.05
HC2	1.89		$290.04		$17.02	$83.49	$390.55
HC1	1.48		$227.12		$17.02	$83.49	$327.63
HB2	1.86		$285.44		$17.02	$83.49	$385.95
HB1	1.46		$224.05		$17.02	$83.49	$324.56
LE2	1.96		$300.78		$17.02	$83.49	$401.29
LE1	1.54		$236.33		$17.02	$83.49	$336.84
LD2	1.86		$285.44		$17.02	$83.49	$385.95
LD1	1.46		$224.05		$17.02	$83.49	$324.56
LC2	1.56		$239.40		$17.02	$83.49	$339.91
LC1	1.22		$187.22		$17.02	$83.49	$287.73
LB2	1.45		$222.52		$17.02	$83.49	$323.03
LB1	1.14		$174.94		$17.02	$83.49	$275.45
CE2	1.68		$257.81		$17.02	$83.49	$358.32
CE1	1.50		$230.19		$17.02	$83.49	$330.70
CD2	1.56		$239.40		$17.02	$83.49	$339.91
CD1	1.38		$211.77		$17.02	$83.49	$312.28
CC2	1.29		$197.96		$17.02	$83.49	$298.47
CC1	1.15		$176.48		$17.02	$83.49	$276.99
CB2	1.15		$176.48		$17.02	$83.49	$276.99
CB1	1.02		$156.53		$17.02	$83.49	$257.04
CA2	0.88		$135.04		$17.02	$83.49	$235.55
CA1	0.78		$119.70		$17.02	$83.49	$220.21

RUG-IV Category	Nursing Index	Therapy Index	Nursing Component	Therapy Component	Non-Case Mix Therapy Component	Non-case Mix Component	Total Rate
BB2	0.97		$148.86		$17.02	$83.49	$249.37
BB1	0.90		$138.11		$17.02	$83.49	$238.62
BA2	0.70		$107.42		$17.02	$83.49	$207.93
BA1	0.64		$98.21		$17.02	$83.49	$198.72
PE2	1.50		$230.19		$17.02	$83.49	$330.70
PE1	1.40		$214.84		$17.02	$83.49	$315.35
PD2	1.38		$211.77		$17.02	$83.49	$312.28
PD1	1.28		$196.43		$17.02	$83.49	$296.94
PC2	1.10		$168.81		$17.02	$83.49	$269.32
PC1	1.02		$156.53		$17.02	$83.49	$257.04
PB2	0.84		$128.91		$17.02	$83.49	$229.42
PB1	0.78		$119.70		$17.02	$83.49	$220.21
PA2	0.59		$90.54		$17.02	$83.49	$191.05
PA1	0.54		$82.87		$17.02	$83.49	$183.38

BILLING CODE 4120–01–C

3. Wage Index Adjustment to Federal Rates

Section 1888(e)(4)(G)(ii) of the Act requires that we adjust the Federal rates to account for differences in area wage levels, using a wage index that we find appropriate. Since the inception of a PPS for SNFs, we have used hospital wage data in developing a wage index to be applied to SNFs.

In the FY 2012 proposed rule, we proposed to continue that practice as we continue to believe that in the absence of SNF-specific wage data, using the hospital inpatient wage index is appropriate and reasonable for the SNF PPS. As explained in the update notice for FY 2005 (69 FR 45786, July 30, 2004), the SNF PPS does not use the hospital area wage index's occupational mix adjustment, as this adjustment serves specifically to define the occupational categories more clearly in a hospital setting; moreover, the collection of the occupational wage data also excludes any wage data related to SNFs. Therefore, we believe that using the updated wage data exclusive of the occupational mix adjustment continues to be appropriate for SNF payments.

In the FY 2012 proposed rule, we also proposed to continue using the same methodology discussed in the SNF PPS final rule for FY 2008 (72 FR 43423) to address those geographic areas in which there are no hospitals and, thus, no hospital wage index data on which to base the calculation of the FY 2012 SNF PPS wage index. For rural geographic areas that do not have hospitals and, therefore, lack hospital wage data on which to base an area wage adjustment, we proposed to use the average wage index from all contiguous CBSAs as a reasonable proxy. This methodology was used to construct the wage index for rural Massachusetts for FY 2011. However, as indicated in the FY 2012 proposed rule (76 FR 26378), there is now a rural hospital with wage data upon which to base an area wage index for rural Massachusetts. Therefore, it is not necessary to apply this methodology to rural Massachusetts for FY 2012. Furthermore, we indicated that we would not apply this methodology to rural Puerto Rico due to the distinct economic circumstances that exist there, but instead would continue using the most recent wage index previously available for that area. For urban areas without specific hospital wage index data, we proposed to use the average wage indexes of all of the urban areas within the State to serve as a reasonable proxy for the wage index of that urban CBSA. At the time of the proposed rule, both CBSA 49700, Yuba City, CA, and CBSA 25980, Hinesville-Fort Stewart, GA, did not have wage index data. However, for this final rule, Yuba City, CA now has wage index data. Therefore, the only urban area without wage index data available is CBSA 25980, Hinesville-Fort Stewart, GA.

The comments that we received on the wage index adjustment to the Federal rates, and our responses to those comments, appear below.

Comment: A commenter recommended that CMS improve its area wage index methodology, and recommended that any design, development, or implementation of a revised hospital wage index must consider other post-acute care settings. The commenter noted research by the Medicare Payment Advisory Commission (MedPAC) and Acumen, LLC (Acumen) to support its concern regarding areas such as reclassification, SNF-specific wage index, the use of U.S. Bureau of Labor Statistics (BLS), and commuting patterns of health care workers employed by SNFs.

Response: As several commenters noted, we have research currently under way to examine alternatives to the wage index methodology, including the issues the commenters mentioned about ensuring that the wage index minimizes fluctuations, matches the costs of labor in the market, and provides for a single wage index policy. Section 3137 of the Affordable Care Act provides that the Secretary of Health and Human Services shall submit a report to Congress by December 31, 2011, that includes a plan to reform the hospital wage index system. Section 3137 of the Affordable Care Act further instructs the Secretary to take into account MedPAC's recommendations on the Medicare wage index classification system, and to include one or more proposals to revise the wage index adjustment applied under section 1886(d)(3)(E) of the Act for purposes of the IPPS. The proposal(s) are to consider each of the following:

- The use of Bureau of Labor Statistics data or other data or methodologies to calculate relative wages for each geographic area.
- Minimizing variations in wage index adjustments between and within MSAs and statewide rural areas.
- Methods to minimize the volatility of wage index adjustments while maintaining the principle of budget neutrality.
- The effect that the implementation of the proposal would have on health care providers in each region of the country.
- Issues relating to occupational mix, such as staffing practices and any evidence on quality of care and patient safety, including any recommendations for alternative calculations to the occupational mix.
- Provide for a transition.

To assist us in meeting the requirements of section 106(b)(2) of the Tax Relief and Health Care Act of 2006 (Pub. L. 109–432, enacted on December 20, 2006) (TRHCA), in February 2008, we awarded a Task Order under our Expedited Research and Demonstration Contract to Acumen, LLC. Acumen, LLC conducted a study of both the current methodology used to construct the Medicare wage index and the recommendations reported to Congress by MedPAC. Parts 1 and 2 of Acumen's final report, which analyzes the strengths and weaknesses of the data sources used to construct the CMS and MedPAC indexes, is available online at *http://www.acumenllc.com/reports/cms.*

MedPAC's recommendations were presented in the FY 2009 IPPS final rule (available online at *http://edocket.access.gpo.gov/2008/pdf/E8-17914.pdf*). We plan to monitor these efforts closely, and to determine what impact or influence they may have on the SNF PPS wage index. At this time, we will continue to use the wage index policies and methodologies described in this final rule to adjust the SNF PPS Federal rates for differences in area wage levels. However, we will continue to monitor MedPAC and Acumen's progress on any revisions to the IPPS wage index to identify any policy changes that may be appropriate for SNFs and potential changes may be presented in a future proposed rule. We discuss the Federal rates by labor-related and non-labor related components for FY 2012 below.

To calculate the SNF PPS wage index adjustment, we apply the wage index adjustment to the labor-related portion of the Federal rate, which is 68.693 percent of the total rate. This percentage reflects the labor-related relative importance for FY 2012, using the revised and rebased FY 2004-based market basket. The labor-related relative importance for FY 2011 was 69.311, as shown in Table 9. We calculate the labor-related relative importance from the SNF market basket, and it approximates the labor-related portion of the total costs after taking into account historical and projected price changes between the base year and FY 2012. The price proxies that move the different cost categories in the market basket do not necessarily change at the same rate, and the relative importance captures these changes. Accordingly,

the relative importance figure more closely reflects the cost-share weights for FY 2012 than the base-year weights from the SNF market basket.

We calculate the labor-related relative importance for FY 2012 in four steps. First, we compute the FY 2012 price index level for the total market basket and each cost category of the market basket. Second, we calculate a ratio for each cost category by dividing the FY 2012 price index level for that cost category by the total market basket price index level. Third, we determine the FY 2012 relative importance for each cost category by multiplying this ratio by the base year (FY 2004) weight. Finally, we add the FY 2012 relative importance for each of the labor-related cost categories (wages and salaries, employee benefits, non-medical professional fees, labor-intensive services, and a portion of capital-related expenses) to produce the FY 2012 labor-related relative importance. Tables 6 and 7 show the case-mix adjusted RUG–IV Federal rates by labor-related and non-labor-related components.

BILLING CODE 4120–01–P

TABLE 6: RUG-IV Case-Mix Adjusted Federal Rates for Urban SNFs by Labor and Non-Labor Component

RUG-IV Category	Total Rate	Labor Portion	Non-Labor Portion
RUX	737.08	$506.32	$230.76
RUL	721.01	$495.28	$225.73
RVX	656.06	$450.67	$205.39
RVL	588.60	$404.33	$184.27
RHX	594.39	$408.30	$186.09
RHL	530.14	$364.17	$165.97
RMX	545.24	$374.54	$170.70
RML	500.27	$343.65	$156.62
RLX	478.85	$328.94	$149.91
RUC	558.79	$383.85	$174.94
RUB	558.79	$383.85	$174.94
RUA	467.23	$320.95	$146.28
RVC	479.38	$329.30	$150.08
RVB	415.13	$285.17	$129.96
RVA	413.52	$284.06	$129.46
RHC	417.71	$286.94	$130.77
RHB	375.95	$258.25	$117.70
RHA	330.97	$227.35	$103.62
RMC	366.95	$252.07	$114.88
RMB	344.47	$236.63	$107.84
RMA	283.43	$194.70	$88.73
RLB	356.78	$245.08	$111.70
RLA	229.89	$157.92	$71.97
ES3	672.93	$462.26	$210.67
ES2	526.77	$361.85	$164.92
ES1	470.55	$323.23	$147.32
HE2	454.49	$312.20	$142.29
HE1	377.39	$259.24	$118.15
HD2	425.57	$292.34	$133.23
HD1	354.90	$243.79	$111.11
HC2	401.48	$275.79	$125.69
HC1	335.63	$230.55	$105.08
HB2	396.66	$272.48	$124.18
HB1	332.42	$228.35	$104.07
LE2	412.73	$283.52	$129.21
LE1	345.26	$237.17	$108.09
LD2	396.66	$272.48	$124.18
LD1	332.42	$228.35	$104.07
LC2	348.48	$239.38	$109.10
LC1	293.87	$201.87	$92.00
LB2	330.81	$227.24	$103.57
LB1	281.02	$193.04	$87.98
CE2	367.75	$252.62	$115.13
CE1	338.84	$232.76	$106.08
CD2	348.48	$239.38	$109.10
CD1	319.57	$219.52	$100.05
CC2	305.11	$209.59	$95.52
CC1	282.62	$194.14	$88.48
CB2	282.62	$194.14	$88.48
CB1	261.74	$179.80	$81.94
CA2	239.26	$164.35	$74.91
CA1	223.19	$153.32	$69.87
BB2	253.71	$174.28	$79.43
BB1	242.47	$166.56	$75.91
BA2	210.34	$144.49	$65.85
BA1	200.71	$137.87	$62.84
PE2	338.84	$232.76	$106.08
PE1	322.78	$221.73	$101.05
PD2	319.57	$219.52	$100.05
PD1	303.50	$208.48	$95.02
PC2	274.59	$188.62	$85.97
PC1	261.74	$179.80	$81.94
PB2	232.83	$159.94	$72.89
PB1	223.19	$153.32	$69.87
PA2	192.68	$132.36	$60.32

RUG-IV Category	Total Rate	Labor Portion	Non-Labor Portion
PA1	184.64	$126.83	$57.81

TABLE 7: RUG-IV Case-Mix Adjusted Federal Rates for Rural SNFs by Labor and Non-Labor Component

RUG-IV Category	Total Rate	Labor Portion	Non-Labor Portion
RUX	754.11	$518.02	$236.09
RUL	738.76	$507.48	$231.28
RVX	662.59	$455.15	$207.44
RVL	598.14	$410.88	$187.26
RHX	593.39	$407.62	$185.77
RHL	532.01	$365.45	$166.56
RMX	539.27	$370.44	$168.83
RML	496.30	$340.92	$155.38
RLX	469.37	$322.42	$146.95
RUC	583.77	$401.01	$182.76
RUB	583.77	$401.01	$182.76
RUA	496.30	$340.92	$155.38
RVC	493.78	$339.19	$154.59
RVB	432.40	$297.03	$135.37
RVA	430.87	$295.98	$134.89
RHC	424.59	$291.66	$132.93
RHB	384.69	$264.26	$120.43
RHA	341.72	$234.74	$106.98
RMC	368.93	$253.43	$115.50
RMB	347.44	$238.67	$108.77
RMA	289.13	$198.61	$90.52
RLB	352.74	$242.31	$110.43
RLA	231.51	$159.03	$72.48
ES3	649.90	$446.44	$203.46
ES2	510.25	$350.51	$159.74
ES1	456.54	$313.61	$142.93
HE2	441.19	$303.07	$138.12
HE1	367.53	$252.47	$115.06
HD2	413.57	$284.09	$129.48
HD1	346.05	$237.71	$108.34
HC2	390.55	$268.28	$122.27
HC1	327.63	$225.06	$102.57
HB2	385.95	$265.12	$120.83
HB1	324.56	$222.95	$101.61
LE2	401.29	$275.66	$125.63
LE1	336.84	$231.39	$105.45
LD2	385.95	$265.12	$120.83
LD1	324.56	$222.95	$101.61
LC2	339.91	$233.49	$106.42
LC1	287.73	$197.65	$90.08
LB2	323.03	$221.90	$101.13
LB1	275.45	$189.21	$86.24
CE2	358.32	$246.14	$112.18
CE1	330.70	$227.17	$103.53
CD2	339.91	$233.49	$106.42
CD1	312.28	$214.51	$97.77
CC2	298.47	$205.03	$93.44
CC1	276.99	$190.27	$86.72
CB2	276.99	$190.27	$86.72
CB1	257.04	$176.57	$80.47
CA2	235.55	$161.81	$73.74
CA1	220.21	$151.27	$68.94
BB2	249.37	$171.30	$78.07
BB1	238.62	$163.92	$74.70
BA2	207.93	$142.83	$65.10
BA1	198.72	$136.51	$62.21
PE2	330.70	$227.17	$103.53
PE1	315.35	$216.62	$98.73
PD2	312.28	$214.51	$97.77
PD1	296.94	$203.98	$92.96
PC2	269.32	$185.00	$84.32
PC1	257.04	$176.57	$80.47
PB2	229.42	$157.60	$71.82
PB1	220.21	$151.27	$68.94
PA2	191.05	$131.24	$59.81
PA1	183.38	$125.97	$57.41

BILLING CODE 4120–01–C

Section 1888(e)(4)(G)(ii) of the Act also requires that we apply this wage index in a manner that does not result in aggregate payments that are greater or

less than would otherwise be made in the absence of the wage adjustment. For FY 2012 (Federal rates effective October 1, 2011), we apply an adjustment to fulfill the budget neutrality requirement. We meet this requirement by multiplying each of the components of the unadjusted Federal rates by a budget neutrality factor equal to the ratio of the weighted average wage adjustment factor for FY 2011 to the weighted average wage adjustment factor for FY 2012. For this calculation, we use the same 2010 claims utilization data for both the numerator and denominator of this ratio. We define the wage adjustment factor used in this calculation as the labor share of the rate component multiplied by the wage index plus the non-labor share of the rate component. The budget neutrality factor for this year is 1.0007. The wage index applicable to FY 2012 is set forth in Tables A and B, which appear in the Addendum of this final rule, and is also available on the CMS Web site at *http://www.cms.gov/SNFPPS/04_WageIndex.asp.*

Comment: One commenter estimated SNF reimbursements using both the FY 2012 SNF wage index in the proposed rule and in the absence of a wage index using simulation. The commenter found that SNF reimbursement was about $400 million lower with the wage index adjustment than without it. The commenter believes that CMS is incorrectly adjusting for the wage index and that payments during the 2002 to 2011 timeframe are nearly $3 billion too low.

Response: As previously stated in the final rule for FY 2010 (74 FR 40303), the intent of the wage index budget neutrality factor is to make sure that aggregate payments using the updated wage index are not greater or less than aggregate payments would be using the previous year's wage index. Because the wage index is based on the pre-floor, pre-reclassified, no occupational mix hospital wage index, the weighted average wage index would be equal to 1.0000 for hospitals. However, there are often multiple SNFs within a wage area with varying utilization levels. The weighted average wage index across all SNF providers may not be equal to 1.0000 for any given fiscal year, so payments could go up or down as a result of their application. Estimation of payments relies on the combination of the geographic wage index value for providers along with their distribution of service days. The change in the wage index values along with the utilization within each urban or rural area determines the change in aggregate payments related to the previous year, and therefore, the budget neutrality factor. The application of the budget neutrality factor ensures that aggregate payments will not increase or decrease due to the year-to-year change in the wage index. Therefore, we do not agree with the methodology used by the commenter, and believe that the 1.0007 budget neutrality factor will ensure equal payments after updating to the FY 2012 SNF PPS wage index, prior to any other policy changes.

In the SNF PPS final rule for FY 2006 (70 FR 45026, August 4, 2005), we adopted the changes discussed in the Office of Management and Budget (OMB) Bulletin No. 03–04 (June 6, 2003), available online at *http://www.whitehouse.gov/omb/bulletins_b03–04,* which announced revised definitions for Metropolitan Statistical Areas (MSAs), and the creation of Micropolitan Statistical Areas and Combined Statistical Areas. In addition, OMB published subsequent bulletins regarding CBSA changes, including changes in CBSA numbers and titles. As indicated in the FY 2008 SNF PPS final rule (72 FR 43423, August 3, 2007), this and all subsequent SNF PPS rules and notices are considered to incorporate the CBSA changes published in the most recent OMB bulletin that applies to the hospital wage data used to determine the current SNF PPS wage index. The OMB bulletins may be accessed online at *http://www.whitehouse.gov/omb/bulletins/index.html.*

In adopting the OMB Core-Based Statistical Area (CBSA) geographic designations, we provided for a 1-year transition with a blended wage index for all providers. For FY 2006, the wage index for each provider consisted of a blend of 50 percent of the FY 2006 MSA-based wage index and 50 percent of the FY 2006 CBSA-based wage index (both using FY 2002 hospital data). We referred to the blended wage index as the FY 2006 SNF PPS transition wage index. As discussed in the SNF PPS final rule for FY 2006 (70 FR 45041), subsequent to the expiration of this 1-year transition on September 30, 2006, we used the full CBSA-based wage index values, as now presented in Tables A and B in the Addendum of this final rule.

4. Updates to Federal Rates

In accordance with section 1888(e)(4)(E) of the Act, as amended by section 311 of the BIPA, and section 1888(e)(5)(B) of the Act, as amended by section 3401(b) of the Affordable Care Act, the payment rates in this final rule reflect an update equal to the full market basket, estimated at 2.7 percentage points, reduced by the MFP adjustment. As discussed in sections I.G.2 and VI.C of the FY 2012 proposed rule (76 FR 26368 through 26369 and 26394 through 26396), the annual update includes a reduction to account for the MFP adjustment described in the latter section. As discussed in section III.F.3 of this final rule, the final MFP adjustment is 1.0 percent, for a net update of 1.7 percent for FY 2012.

5. Relationship of RUG–IV Case-Mix Classification System to Existing Skilled Nursing Facility Level-of-Care Criteria

As discussed in § 413.345, we include in each update of the Federal payment rates in the **Federal Register** the designation of those specific RUGs under the classification system that represent the required SNF level of care, as provided in § 409.30. As set forth in the FY 2011 SNF PPS notice with comment period (75 FR 42910, July 22, 2010), this designation reflects an administrative presumption under the 66-group RUG–IV system that beneficiaries who are correctly assigned to one of the upper 52 RUG–IV groups on the initial 5-day, Medicare-required assessment are automatically classified as meeting the SNF level of care definition up to and including the assessment reference date on the 5-day Medicare-required assessment.

A beneficiary assigned to any of the lower 14 RUG–IV groups is not automatically classified as either meeting or not meeting the definition, but instead receives an individual level of care determination using the existing administrative criteria. This presumption recognizes the strong likelihood that beneficiaries assigned to one of the upper 52 RUG–IV groups during the immediate post-hospital period require a covered level of care, which would be less likely for those beneficiaries assigned to one of the lower 14 RUG–IV groups.

In this final rule, we are continuing the designation of the upper 52 RUG–IV groups for purposes of this administrative presumption, consisting of all groups encompassed by the following RUG–IV categories:

- Rehabilitation plus Extensive Services;
- Ultra High Rehabilitation;
- Very High Rehabilitation;
- High Rehabilitation;
- Medium Rehabilitation;
- Low Rehabilitation;
- Extensive Services;
- Special Care High;
- Special Care Low; and,
- Clinically Complex.

However, we note that this administrative presumption policy does

not supersede the SNF's responsibility to ensure that its decisions relating to level of care are appropriate and timely, including a review to confirm that the services prompting the beneficiary's assignment to one of the upper 52 RUG–IV groups (which, in turn, serves to trigger the administrative presumption) are themselves medically necessary. As we explained in the FY 2000 SNF PPS final rule (64 FR 41667, July 30, 1999), the administrative presumption

> * * * is itself rebuttable in those individual cases in which the services actually received by the resident do not meet the basic statutory criterion of being reasonable and necessary to diagnose or treat a beneficiary's condition (according to section 1862(a)(1) of the Act). Accordingly, the presumption would not apply, for example, in those situations in which a resident's assignment to one of the upper * * * groups is itself based on the receipt of services that are subsequently determined to be not reasonable and necessary.

Moreover, we want to stress the importance of careful monitoring for changes in each patient's condition to determine the continuing need for Part A SNF benefits after the assessment reference date of the 5-day assessment, after which the administrative presumption no longer applies.

Comment: One commenter stated that certain instructions contained in version 3.0 of the Long-Term Care Facility Resident Assessment Instrument (RAI) User's Manual (available online at *https://www.cms.gov/NursingHomeQualityInits/45_NHQIMDS30TrainingMaterials.asp*) are inconsistent with the SNF level of care presumption. Specifically, the commenter cited instructions in Chapter 3 (''Overview to the Item-by-Item Guide to the MDS 3.0''), Section O (''Special Treatments, Procedures, and Programs (V1.05)''), which provide that tracheostomy care may be coded on the assessment when performed by residents themselves. Similarly, these instructions provide for coding oxygen therapy when a resident places or removes his or her own oxygen mask/cannula, as well as when a resident performs his or her own dialysis. The commenter stated that allowing these items to be coded under such circumstances compromises not only the definition of ''skilled services'' but the entire RUG–IV case-mix classification system.

Response: We believe that the commenter errs in assuming that all of the ''special procedures'' described in this section of the manual necessarily equate directly to skilled services. For example, even though dialysis is a critically important, life-sustaining procedure, its various component tasks simply do not generally require the involvement of *skilled* personnel—as evidenced by the many instances in which beneficiaries can be successfully trained to self-dialyze (or where a friend or family member with no prior caregiving experience or training can readily be taught to perform the dialysis for them). Moreover, while it is true that dialysis is one of the discrete indicators for assignment to a RUG within the Special Care Low category—a category to which the level of care presumption applies for a short period of time at the start of a SNF stay—it is the *totality* of items and services included within a given RUG, not any one specific coded service, that actually serves to justify the presumption. As explained in the FY 2000 SNF PPS final rule (64 FR 41667, July 30, 1999), it is this entire cluster of services, when combined with the ''tendency * * * for the initial portion of an SNF stay to be the most intensive and unstable'' that provides the basis for making the level of care presumption, as triggered by a resident's assignment to one of the designated upper RUGs on the initial 5-day, Medicare-required assessment.

6. Example of Computation of Adjusted PPS Rates and SNF Payment

Using the hypothetical SNF XYZ described in Table 8, the following shows the adjustments made to the Federal per diem rate to compute the provider's actual per diem PPS payment. SNF XYZ's 12-month cost reporting period begins October 1, 2011. As illustrated in Table 8, SNF XYZ's total PPS payment would equal $40,053.06. We derive the Labor and Non-labor columns from Table 6 of this final rule.

TABLE 8—RUG–IV SNF XYZ: LOCATED IN CEDAR RAPIDS, IA (URBAN CBSA 16300)

[Wage index: 0.8831]

RUG–IV group	Labor	Wage index	Adjusted labor	Non-labor	Adjusted rate	Percent adjustment	Medicare days	Payment
RVX	$450.67	$0.8831	$397.99	$205.39	$603.38	$603.38	14	$8,447.32
ES2	361.85	0.8831	319.55	164.92	484.47	484.47	30	14,534.10
RHA	227.35	0.8831	200.77	103.62	304.39	304.39	16	4,870.24
CC2*	209.59	0.8831	185.09	95.52	280.61	639.79	10	6,397.90
BA2	144.49	0.8831	127.60	65.85	193.45	193.45	30	5,803.50
							100	40,053.06

* Reflects a 128 percent adjustment from section 511 of the MMA.

C. Resource Utilization Groups, Version 4 (RUG–IV)

1. Prospective Payment for SNF Non-Therapy Ancillary Costs

The FY 2012 proposed rule discussed the issue of payment for NTA costs under the SNF PPS (76 FR 26381 through 26384). This discussion described the previous research that has been conducted in this area, as well as current policy and analysis. Specifically, this discussion referenced the ongoing development of a two-part NTA component payment, as well as the conceptual analysis for the types of conditions and MDS-driven variables which may be used to predict and pay for patient NTA costs accurately. Finally, this discussion included reference to the impact of an NTA component payment as it relates to the temporary AIDS add-on payment established by section 511 of the MMA (as discussed in section I.E of this final rule). The comments that we received on this topic both this year and in response to the FY 2011 notice with comment period, and our responses, appear below.

Comment: All of the comments we received in response to this discussion supported CMS's broad objective to develop a new method for paying for NTAs received in the SNF, as well as the basic structure described in the proposed rule for a potential NTA rate component. The commenters also expressed their interest in working with CMS to develop an appropriate NTA rate component that is properly tailored to capture facility NTA costs accurately. Similarly, in response to the FY 2011 notice with comment period, several commenters also expressed their

support for development of a separate NTA component in line with CMS's current research.

Response: We appreciate the broad support that we received for the objective and overall model for designing a separate NTA rate component. The comments we received provided a number of interesting and creative ideas which will be considered during the research and development process. We look forward to working with providers and stakeholders in the future as we continue to develop this refinement to the SNF PPS.

Comment: A few commenters stated that the NTA rate component research should be updated to reflect data gathered on the MDS 3.0. One commenter asked that CMS consider the potential interplay between an NTA component and those drugs and services which may be subject to, or excluded from, consolidated billing. Several commenters also said that, given CMS's discussion related to reallocating some portion of the nursing component to fund the NTA component, CMS should ensure that the nursing component still reflects resource cost and utilization after the carve-out is done. Finally, one commenter, in response to the FY 2011 notice with comment period, requested that CMS pay special attention to NTA costs associated with providing ventilator services within the SNF.

Response: We agree with the commenters that our research must be aligned with continuous improvements made to the SNF PPS, particularly the MDS 3.0. We expect that, as more MDS 3.0 data become available, our NTA researchers will be able to incorporate these data into our analysis. Similarly, we are cognizant of the potential relationship between the NTA research and services and drugs which fall under consolidated billing. As we continue our analysis, we expect that such relationships will be considered in determining the appropriateness of the NTA component.

With regard to ensuring the adequacy of the nursing component after carving out a separate NTA component, we intend to ensure that the introduction of a new rate component for NTAs does not undermine the adequacy of payments for nursing services, and we will continue to monitor the adequacy of payments after any new rate component is implemented. It should be noted that any new carved-out NTA component would, in effect, remove from the nursing component only the costs of the NTA services themselves, which we would then adjust separately from nursing costs based on information that may better predict NTA costs.

Finally, as discussed in the FY 2010 final rule (74 FR 40341), ventilator patients are addressed to some extent within the RUG–IV system (through payments under the Extensive Services group), and we are continuing to monitor the adequacy of payments for this subset of SNF residents. Currently, payments for these services are still integrated into the nursing costs paid for the relevant case-mix group, but in our NTA research, we are considering a variety of special NTA subsets, including ventilator use, which might deserve special attention as part of the highest-tiered payment within the non-routine NTA tier system.

Comment: One commenter believed that the Post Acute Care Payment Reform Demonstration (PAC–PRD) and data collected as part of the research on the CARE tool would not serve as an appropriate source of data for the NTA research we are conducting. This commenter stated that it would be premature for CMS to make use of such data before it has been subject to both agency and Congressional review.

Response: We appreciate the commenter's concern regarding the use of these data and will certainly consider it as the research moves forward. We would note that data sources, such as the PAC–PRD, are being considered for their potential utility as part of developing an NTA component which would more accurately reimburse facilities for incurred NTA costs, though no final decision has been made as to what are the most appropriate sources. In the end, we will ensure that all data sources have been thoroughly reviewed for their accuracy and applicability within the SNF setting.

Comment: Several commenters discussed the possibility of including a cost pass-through for high-cost drugs and services as part of the outlier development.

Response: While we appreciate comments on the development of an SNF outlier policy, we would note that we do not have statutory authority to implement an outlier payment for certain NTA services.

D. Ongoing Initiatives Under the Affordable Care Act

1. Value-Based Purchasing (Section 3006)

In the FY 2012 proposed rule (76 FR 26384), we noted that section 3006(a) of the Affordable Care Act directs the Secretary to develop a plan to implement a value-based purchasing (VBP) program for SNFs, and submit a Report to Congress by October 1, 2011. As stated in the proposed rule, VBP is designed to tie payment to performance in such a way as to reduce inappropriate or poorly provided care and identify and reward those who provide effective and efficient patient care. We also stated that, in accordance with section 3006(a) of the Affordable Care Act, we would consult with stakeholders in developing the implementation plan, and consider the outcomes of any recent demonstration projects related to VBP which we believe might be relevant to the SNF setting. The comments we received on this topic, along with our responses, appear below.

Comment: We received some comments in response to our description of the requirements of section 3006(a) of the Affordable Care Act to develop a plan to implement a VBP program for SNFs, and to submit to Congress a report by October 1, 2011. Commenters supported our efforts to consider a VBP program for SNFs, and made suggestions for the content and timing of the Report to Congress.

Response: Between December 2010 and January 2011, we held discussions with key stakeholders representing consumers, providers, and research organizations about the development of a plan to implement a VBP program for SNFs and the Report to Congress. We also held an Open Door Forum on March 10, 2011, in which more than 700 stakeholders participated in the call. A number of organizations submitted follow-up written comments, which we will share with the VBP project team.

We are in the process of developing the SNF VBP plan to address areas required by the statute. As required by the statute, in developing the plan, we will consider, among other things, measures of quality and efficiency in SNFs, reporting, collection, and validation of quality data, the structure of VBP adjustments, including the determination of thresholds or improvements in quality that would substantiate a payment adjustment, the size of such payments, and the sources of funding for bonus payments. We plan to submit the Report to Congress by the statutory deadline of October 1, 2011.

2. Payment Adjustment for Hospital-Acquired Conditions (Section 3008)

One of the ongoing Affordable Care Act initiatives that we discussed in the FY 2012 SNF PPS proposed rule (76 FR 26384) is the payment adjustment added by section 3008(a) of the Affordable Care Act, which is intended to provide an incentive to reduce the occurrence of certain preventable hospital-acquired conditions. While this hospital provision is itself beyond the scope of the SNF PPS, in the proposed rule, we

additionally mentioned a study required under section 3008(b) of the Affordable Care Act, which directs the Secretary to evaluate possibly expanding the HAC policy from acute care hospitals to a variety of other settings, including SNFs, and to submit a report to Congress containing the results of the study by January 1, 2012.

Comment: We received a number of comments regarding the study referenced in the proposed rule that is required by section 3008(b) of the Affordable Care Act, which directs the Secretary to undertake a study and send a Report to Congress considering the feasibility of extending the Hospital Acquired Conditions-Present on Admission (HAC–POA) program to the other types of facilities. The commenters urged CMS to evaluate carefully the types of facility-acquired conditions that would be relevant to SNFs, and to avoid simply applying all of the hospital-acquired conditions to the postacute setting.

Response: We appreciate the comments we received on the issues that we should consider in the study and Report to Congress required by section 3008(b) of the Affordable Care Act. We are considering a broad range of issues related to extending the HAC–POA program to the other types of facilities specified in the Affordable Care Act. The required study and Report to Congress are currently in progress, and we intend to issue the report by the statutory deadline.

3. Nursing Home Transparency and Improvement (Section 6104)

In the FY 2011 proposed rule (76 FR 26385), we discussed section 6104 of the Affordable Care Act, which requires SNFs to report expenditures separately for direct care staff wages and benefits on the Medicare cost report, for cost reporting periods beginning on or after 2 years after enactment, and also requires the Secretary to perform certain related activities. We received no comments on this provision.

E. Other Issues

1. Required Disclosure of Ownership and Additional Disclosable Parties Information (Section 6101)

In the SNF PPS proposed rule for FY 2012 (76 FR 26364), we proposed to revise the reporting requirements that Medicare SNFs and Medicaid nursing facilities must disclose at the time of enrollment and when any change in ownership occurs, in accordance with section 6101 of the Affordable Care Act.

In certain regulations that apply to Medicare SNFs and Medicaid nursing facilities, we proposed to add a definition for ''additional disclosable party'' and ''organizational structure'' and to revise the definition for ''managing employee.'' These proposed definitions were consistent with the requirements set forth in section 6101 of Affordable Care Act. Given the arguably broad nature of the term ''additional disclosable parties,'' we solicited comments on how best to narrow the scope of the definition for this term. We also proposed to revise § 424.516 to implement certain new disclosure requirements that pertain to Medicare SNFs and to amend § 455.104 to implement certain new disclosure requirements that pertain to Medicaid nursing facilities. Furthermore, we requested comments on a potential alternative approach in which we would collect certain information from Medicare SNFs only upon revalidation consistent with the requirements set forth in § 424.515. In accordance with § 424.515, Medicare SNFs generally would be subject to revalidation requirements every 5 years. Section 424.515(d), however, provides for off-cycle revalidations. We received a number of comments on this potential alternative approach.

To respond properly to all of the comments received related to the disclosure of information requirements, we will publish a separate final rule specifically addressing these provisions at a later date. In accordance with the statutory requirements of section 6101 of the Affordable Care Act, we intend to publish that final rule early in CY 2012. Accordingly, we are not implementing these provisions in this SNF PPS final rule.

2. Therapy Student Supervision

In the FY 2012 proposed rule (76 FR 26385 through 26386), we proposed to revise a policy that had appeared previously in the preamble to the FY 2000 final rule, which had specified that a therapy student in the SNF setting must ''* * * be under the 'line-of-sight' level of supervision of the professional therapist'' (64 FR 41661, July 30, 1999). We proposed that line-of-sight supervision should no longer be required in the SNF setting. We proposed that, instead, each SNF would determine for itself the appropriate manner of supervision of therapy students consistent with applicable State and local laws and practice standards. We advanced this proposal in the interest of promoting greater conformity with the other inpatient settings under Part A (for example, acute care hospitals and IRFs), which already permit each provider to determine for itself the most appropriate manner of supervision in this context, consistent with applicable State and local laws and practice standards. The comments we received on this topic, along with our responses, may be found below.

Comment: The great majority of commenters were supportive of this revision, with some criticizing the existing policy as creating difficulty in securing therapy students in the SNF setting. One commenter expressed the belief that supervising therapists will now be able to offer an increased quality of care in the SNF setting, and that students will experience an elevated quality of learning that will prepare future clinicians to work in the SNF setting. Many commenters were concerned with how the time spent by therapy students with SNF patients could be billed, if at all. Several of the therapy trade associations offered detailed guidelines on therapy student supervision, with some of those also indicating that once a supervising therapist deems the student capable of treating a patient without line-of-sight supervision, the student's time should then be separately counted as skilled therapy minutes, over and above the therapist's own time. By contrast, another commenter stressed the importance of making clear that only the line-of-sight supervision requirement itself is being changed, to avoid triggering an inordinate increase in therapy student minutes that would create another distortion in the payment system. Several commenters suggested that CMS publish specific criteria that facilities should use to determine whether a student is capable to treat patients without line-of-sight supervision. Others suggested that beyond the specific criteria, CMS should specifically state that the supervising therapist, rather than the facility, should be the only entity to determine whether a student is capable of treating patients without line-of-sight supervision. However, two commenters were completely opposed to rescinding the line-of-sight requirement: One stated that eliminating this requirement would be inconsistent with existing Part B therapy instructions appearing in § 230 of the Medicare Benefit Policy Manual (MBPM), Chapter 15, while the other expressed concern that it could result in SNFs inappropriately misclassifying therapy time to increase reimbursement.

Response: Regarding the Part B instructions that one of the commenters cited in the MBPM, we note that these particular instructions do not actually mandate line-of-sight supervision for therapy students, but merely specify

that the services ''* * * performed by a student are not reimbursed *even if* provided under 'line of sight' supervision of the therapist'' (emphasis added). Further, with regard to the concerns over potential distortions in reimbursement, we wish to clarify that the change we have proposed would solely address the *specific manner* of supervision for a therapy student in this setting, but would in no way alter that individual's basic status as a student operating under the therapist's supervision. Thus, this policy change would not change the manner in which therapy minutes currently are recorded on the MDS or cause the student's time to become separately reimbursable.

In response to those commenters concerned with how to bill therapy student time spent with SNF patients, consistent with our existing policy as set forth in the RAI Manual, Chapter 3, Section O (pages O–20 through O–22), as the therapy student is under the direction of the supervising therapist (even if no longer required to be under line-of-sight supervision), the time the student spends with a patient will continue to be billed as if it were the supervising therapist alone providing the therapy. In other words, the therapy student, for the purpose of billing, is treated as simply an extension of the supervising therapist rather than being counted as an additional practitioner. It should be noted that all policies and definitions related to the type of therapy provided (individual, concurrent, and group) apply to the supervising therapist and therapy student as set forth in the RAI manual, Chapter 3, Section O (pages O–20 through O–22) even if the student is no longer required to be under line-of-sight supervision.

Finally, we agree that students who treat SNF residents without line-of-sight supervision should be qualified based on specific guidelines. As we stated in the proposed rule, ''* * * each SNF would determine for itself the appropriate manner of supervision of therapy students, consistent with applicable State and local laws and practice standards'' (76 FR 26835). We expect that professional associations, State and local licensing boards, and facilities should have very specific guidelines related to student clinicians' level of education and experience. Additionally, we expect that every student clinician should meet these standards and guidelines and that once met, the supervising therapist should have ultimate authority to determine whether a student clinician is adequately prepared to treat patients without line-of-sight supervision. In this context, we appreciate the detailed supervision guidelines that several of the trade associations have developed, which we recognize as playing a significant role in helping to define the applicable standards of practice on which providers rely in this context. However, we believe that the question of counting the student's time is actually a separate issue apart from providing guidance on appropriate supervisory practices themselves. As noted previously, a therapy student's time was not separately reimbursable prior to the elimination of the requirement for line-of-sight supervision, nor does it become so now as a result of this change.

Therefore, for the reasons outlined in this final rule and in the FY 2012 proposed rule (76 FR 26385 through 26386), we are finalizing our proposed revision to the line-of-sight supervision requirements as they pertain to students in a SNF setting. Accordingly, in this final rule, we are hereby discontinuing the policy announced in the FY 2000 final rule's preamble requiring line-of-sight supervision of therapy students in SNFs, as set forth in the FY 2012 proposed rule. Instead, effective October 1, 2011, as with other inpatient settings, each SNF will determine for itself the appropriate manner of supervision of therapy students consistent with State and local laws and practice standards. We will be monitoring student participation in SNFs and expect that facilities will ensure that students, though no longer required to be under line-of-sight supervision, will still be properly supervised for both the student's and patient's benefit.

3. Group Therapy and Therapy Documentation

Under our current policy, group therapy is the practice of one professional therapist treating multiple patients (up to a maximum of four) at the same time while the patients are performing either the same or similar activities, consistent with the policies first set forth in the FY 2000 SNF PPS final rule (64 FR 41662). In the FY 2012 proposed rule (76 FR 26386 through 26388), we proposed to make certain changes relating to the definition of group therapy and payment of group therapy services.

We noted that, using our STRIVE data as a baseline, we identified two significant changes in provider behavior related to the provision of therapy services to Medicare beneficiaries in SNFs under RUG–IV. First, we saw a major decrease in the amount of concurrent therapy performed in SNFs, the minutes for which are divided between the two concurrent therapy participants when determining the patient's appropriate RUG classification. At the same time, we found a significant increase in the amount of group therapy services, which are currently not subject to the allocation requirement. Given this increase in group therapy services, we expressed concern that the current method for reporting group therapy on the MDS creates an inappropriate payment incentive to perform the group therapy in place of individual therapy, because the current method of reporting group therapy time does not require allocation among patients, as noted by several commenters. In addition, the allocation of concurrent therapy minutes effective FY 2011 may have created an incentive to perform group therapy in place of concurrent therapy in situations where concurrent therapy otherwise may have been appropriate. In the proposed rule, we proposed to change our policies relating to group therapy as further discussed below.

First, we proposed to establish a standard that defines group therapy as therapy provided simultaneously to four patients who are performing the same or similar therapy activities (76 FR 26386 through 26387). As we stated in the proposed rule (76 FR 26386), because in group therapy patients are performing similar activities, in contrast to concurrent therapy, group therapy gives patients the opportunity to benefit from each other's therapy regimen by observing and interacting with one another, and applying the lessons learned from others to one's own therapy program in order to progress. Large groups, such as those of five or more participants, can make it difficult for the participants to engage with one another over the course of the session. In addition, we have long believed that individual therapists could not adequately supervise large groups, and since the inception of the SNF PPS in July 1998, we have capped the number of residents at four.

Furthermore, we believe that groups of fewer than four participants do not maximize the group therapy benefit for the participants. As we stated in the FY 2012 proposed rule (76 FR 26386), we believe that in groups of 2 or 3 participants, the opportunities for patients in the group to interact and learn from each other are significantly diminished given the small size of the group. Thus, we believe that groups of two or three participants, given their small size, significantly limit the ability of patients to derive the unique benefits associated with group therapy. In such small groups, these limitations become even more accentuated whenever one or two patients are absent from the therapy

session (in fact, with groups of two participants, if one patient is absent from the session, there are no longer any patients with whom the remaining participant can interact, thereby eliminating any benefit that could be derived from participation in a group). Thus, for the reasons discussed above and in the FY 2012 proposed rule (76 FR 26386 through 26387), we believe that the most appropriate group therapy size for the SNF setting is four, which we believe is the size that permits the therapy participants to derive the maximum benefit from the group therapy setting. Accordingly, we proposed to define group therapy as therapy provided simultaneously to four patients who are performing similar therapy activities (76 FR 26387).

In addition, we proposed to allocate group therapy among the four group therapy participants. As we stated in the FY 2012 proposed rule (76 FR 26387), the SNF PPS is based on resource utilization and costs. We believe that when a therapist treats four patients in a group for an hour, it does not cost the SNF four times the amount (or four hours of a therapist's salary) to provide those services. The therapist would appropriately receive one hour's salary for the hour of therapy provided. Accordingly, we believe that allocating group therapy minutes among the four group therapy participants would best capture the resource utilization and cost. For therapists treating patients in a group setting, the full time spent by the therapist with these patients would be divided by 4 (the number of patients that comprise a group). As we stated in the FY 2012 proposed rule (76 FR 26387), as is currently the procedure, the SNF would report the total unallocated group therapy minutes on the MDS 3.0 for each patient. In terms of RUG–IV classification, this total time would be allocated (that is, divided) among the four group therapy participants to determine the appropriate number of RTM and, therefore, the appropriate RUG–IV therapy group and payment level, for each participant. We stated in the FY 2012 proposed rule that the 25 percent cap on group therapy minutes, as defined in the July 30, 1999 final rule (64 FR 41662) will remain in effect, as we continue to believe that group therapy should serve only as an adjunct to individual therapy. The 25 percent cap would be applied to the patient's reimbursable group therapy minutes. In addition, consistent with our current policy (64 FR 41662), the supervising therapist may not be supervising any individuals other than the four individuals who are in the group at the time of the therapy session.

Additionally, we made a number of clarifications with regard to clinical documentation requirements related to a patient's plan of care (76 FR 26387 through 26388). In the proposed rule, we discussed these requirements and clarified a number of regulatory provisions related to documentation within the SNF setting (see 76 FR 26387 through 26388 for a full discussion). Specifically, we noted (76 FR 26387) that SNFs are currently required to follow a prescribed plan of care for the therapy provided to a SNF resident (§ 409.23) and that the plan must meet the requirements of the regulations in § 409.17(b) through (d). We further clarified that supporting medical record documentation is needed so that SNFs can verify that the plan of care is being followed, and can identify when significant changes in a patient's medical condition occur. In addition, we stated that such supporting medical record documentation has always been required so that contractors can verify medical necessity when they review SNF claims (76 FR 26387). One example of appropriate documentation would be to use time stamps to indicate the exact start and ending time of a therapy session. These time stamps could be tracked on a beneficiary's record to determine what discipline and mode of therapy they received. If necessary, these time stamps could be compared with a therapist's log in order to streamline the medical review process. We also clarified that providers should ensure that skilled therapy services are appropriate to the goals of a patient's individualized plan of care, and that it should be clear, based on the patient's medical record, therapy notes, and/or other related documentation, how the prescribed skilled therapy services contribute to the patient's anticipated progress toward the prescribed goals (76 FR 26388). We discussed the relationship between this documentation and the use of group therapy, clarifying that group therapy is not appropriate for every patient or for all conditions. Accordingly, SNFs should include justification for using group therapy as part of the patient's plan of care, to permit verification of the medical necessity and the appropriateness of the prescribed therapy plan (76 FR 26388). Finally, we discussed the need to update the patient's plan of care when changes occur that would affect the prescribed therapy plan or patient's condition, and clarified that any such changes in the therapy plan must be justified by changes in the beneficiary's underlying health condition, and that the provider is expected to describe in the plan of care the reasons for deviating from the original plan (76 FR 26388). We received a number of comments on these proposals and clarifications which, along with our responses, appear below.

Comment: Several commenters expressed support for the proposed change to allocate the group therapy minutes. Many others had general concerns about the allocation of group therapy. One commenter believed that during a group therapy session, every patient benefits for the full time of the session, rather than only one quarter of the session as the allocation of group time would suggest. Additionally, several commenters have expressed that there are psychosocial and functional benefits of group therapy and are concerned that residents will be negatively affected by the allocation of group therapy. We have received multiple comments claiming that the allocation of group therapy minutes will disincentivize therapists from performing group therapy in cases where group therapy may be the preferred mode of treatment, since their payments will decrease if they continue to provide the same volume of group therapy. Several commenters stated that planning and implementing group therapy tasks is a very time-consuming and challenging process, and that to allocate the group therapy minutes would mean that payment would not accurately reflect the time spent preparing for these therapy sessions and the additional costs of providing group therapy. One commenter stated it is more expensive to provide group therapy than individual or concurrent therapy.

Response: As we noted in the proposed rule (76 FR 26387), the allocation of group therapy time is based on accurately paying for the therapist's time, not the resident's time. During a one-hour group therapy session with four patients, while all four patients may receive a full hour of benefit from the therapy session, this still only constitutes one hour of the therapist's time. Given that the SNF PPS is based on resource utilization and cost, the payment for these services should reflect the amount of the therapist's time that was utilized as part of the therapy session.

As stated in our proposal, we agree with the commenters that there are unique benefits to group therapy. We do not believe that the allocation of group therapy minutes should be considered a deterrent to having group therapy

sessions or should negatively affect beneficiaries. Instead, allocation of group therapy brings Medicare payments in line with resource utilization and cost for these services and is intended to ensure that the therapist's time is being appropriately counted and reimbursed. We would expect therapists to continue to provide the mode of therapy that is most clinically appropriate for each patient.

Regarding the statement that the preparation for group therapy is a high-cost, time-consuming, and challenging process requiring careful evaluation of each patient, we agree that special care should be taken to plan for the most appropriate group therapy program for the designated patients. However, we expect that therapists will utilize high-quality standards of practice that require careful planning and documentation for all modes of therapy.

Moreover, these costs were included in the establishment of the per diem base rate, and are already being reimbursed as part of the SNF PPS. Additionally, while some commenters did maintain that group therapy costs more to provide than individual or concurrent therapy, other commenters believed the opposite, with one commenter stating the following regarding the allocation policy, ''The policy would undercut efficiency, while pushing patients into higher cost modes of care.'' We note that in allocating group therapy minutes, we are not dictating the mode of therapy that a SNF should provide to its patients. Instead, as discussed above, this policy brings Medicare payments more in line with resource utilization and cost for these services. Determinations regarding the appropriate mode of therapy should be made by the therapist based on the clinical needs of each patient.

Comment: Several commenters raised concerns regarding the strict allocation of group therapy minutes by four. The most common question we received from commenters was for clarification of why four was chosen to be the divisor, regardless of the number of participants in the group. Some commenters stated that using a hard divisor of four for group therapy minutes, rather than proposing to have facilities report the number of participants in the group and divide accordingly, contradicts CMS's reasoning that the allocation of group therapy is based on resource cost and utilization. These commenters also inquired as to how the facility should report the therapy time if four residents were scheduled for a group therapy session and one of the participants fell ill and was unable to participate. Several commenters asserted that we created a financial incentive to provide group therapy when we allocated concurrent therapy and did not address group therapy.

One commenter stated that as a rural provider, it is very rare ever to have a 4-person group. Another commenter discussed the ability of therapists to transition patients from a concurrent therapy environment to a group environment, and indicated that dividing by four makes it more difficult for providers to transition patients properly between concurrent and group therapy. Several commenters encouraged CMS to consult with clinical experts and professional therapy associations to determine the most appropriate number of group therapy participants based on clinical standards.

Response: Contrary to commenters' assertions, we did not propose to divide group therapy minutes by four regardless of the number of participants in the group. We proposed to divide by four in allocating group therapy minutes because we had proposed a definition of group therapy which requires four participants. In the FY 2012 proposed rule, we proposed to define group therapy as therapy provided simultaneously to four patients who are performing the same or similar activities. (76 FR 26387) Thus, based on our proposed definition of group therapy (which we are finalizing in this rule), we expect group therapy to be a structured, planned program with four participants for whom group therapy has been determined appropriate. As we stated in the proposed rule, we proposed ''allocating group therapy minutes among the *four* group therapy participants'' (76 FR 26387, emphasis added). Thus, given this definition of group therapy, dividing group therapy minutes by four captures resource utilization and cost associated with providing this mode of therapy, as under our proposed policy, groups would be required to have four participants. We note that, in situations where the definition of group therapy is not met, those minutes may not be coded on the MDS as group therapy.

We recognize that in some situations, one or more of the scheduled group therapy participants may not be able to attend a group session due to illness or otherwise, or may be unable to finish participating in the entire group session. Based on our definition of group therapy as finalized in this rule, we expect group therapy to be a structured, planned program with four participants. However, if one or more of the four participants are unexpectedly absent from a session or cannot finish participating in the entire session, rather than discontinuing payment or requiring the session to be rescheduled, we will continue to deem the therapy session as meeting the definition of group therapy as long as the therapy program originally had been planned for four patients. In this situation, we will continue to assume that there are four patients and, therefore, will divide the therapy minutes by four in allocating group therapy minutes among the group therapy participants. As discussed above, we believe the most appropriate size for group therapy in a SNF setting is four participants and, thus, we believe dividing by four reflects the resource utilization and cost associated with group therapy as we have defined it in this rule and as we expect it to be structured based on this definition.

Commenters have suggested that we recognize an alternative to allocating group therapy by four and, instead, divide the therapy minutes by the number of patients in the group. However, one commenter stated, ''Such an approach does not recognize the additional burdens and costs associated with the provision of group services, however, nor the difficulty providers and therapists would have in tracking the number of people in a group at all times and accurately counting minutes when patients are dropping in and dropping out throughout the session.'' As we stated above and in the FY 2012 proposed rule (76 FR 26387), we believe that most appropriate group therapy size in a SNF setting is four participants and, thus, we have defined group therapy accordingly. Given this definition, we believe that it is appropriate to allocate group therapy minutes among the participants by dividing by four. We note that the apparent lack of structure and discontinuity of the group interventions, as noted by the commenter, suggests that facilities may need to reassess their methods of providing group therapy services. In addition, we agree with many commenters that the implementation of RUG–IV created a payment incentive to provide group therapy and that the increase in group therapy may have been due to payment rather than clinical considerations. We note that by allocating group therapy among the four group therapy participants, we are also equalizing the reimbursement incentive across the modes of therapy. We believe this will once again encourage clinicians to choose the mode of therapy based on clinical rather than financial reasons. Several commenters agreed with this concept and one stated that ''Payments for different modalities of

therapy (concurrent, group, and individual) should reflect the different costs to provide the services. Otherwise providers will have financial incentives to furnish one modality over another, regardless of whether the modality is the most clinically appropriate for the patient.'' It is also important to keep in mind that every payment system has multiple incentives, both positive and negative. The management in each facility is faced with making cost/benefit choices on an almost daily basis. However, these choices must keep patient needs at the forefront of the decision-making process, and the existence of a payment incentive does not in itself justify the provision of a lower or less appropriate level of care merely in order to reduce facility costs.

We continue to believe that the provision of group therapy should be initiated only after determining that group therapy services are appropriate for each patient who receives them and that the group therapy provided is appropriate to the individual plans of care. As we noted in the proposed rule (76 FR 26388),

> It is incumbent upon providers to ensure that skilled therapy services provided to a given SNF resident are appropriate to the goals of the patient's individualized plan of care * * * Because group therapy is not appropriate for either all patients or all conditions, and in order to verify that group therapy is medically necessary and appropriate to the needs of the beneficiary, SNFs should include justification for the use of group, rather than individual or concurrent therapy. This description should include, but need not be limited to, the specific benefits to that particular patient of including the documented type and amount of group therapy; that is, how the prescribed type and amount of group therapy will meet the patient's needs and assist the patient in reaching the documented goals.

Therefore, we believe that to every extent possible, group therapy sessions should not fluctuate in size and membership. As we stated above, we believe the most appropriate group therapy size in a SNF setting is four participants, and thus we are defining group therapy accordingly. Thus, as we are defining group therapy as consisting of four participants, we believe that allocating the minutes among the four participants best captures resource utilization and cost.

As discussed above, one commenter discussed the ability of therapists to transition patients from a concurrent therapy environment to a group environment, and indicated that dividing by four makes it more difficult for providers to transition patients properly between concurrent and group therapy. Historically, prior to the implementation of the RUG–IV system, SNFs reported a low utilization of group therapy. The limited use of group therapy programs may well be related to the logistical difficulties mentioned by this commenter, such as transitioning the patients properly between concurrent and group therapy. However, we do not see how allocating group therapy minutes would make it more difficult to transition patients from one therapy mode to another, as such transitions should be based on clinical determinations. The purpose of our allocation policy is to provide payment that better reflects resource utilization and cost, and we do not believe this policy should affect clinical determinations regarding the appropriate mode of therapy provided to a patient. We recognize the unique challenges that rural facilities face, but as we discussed above and in the FY 2012 proposed rule, we believe that the most appropriate group therapy size for a SNF setting is four. We believe that group therapy should be used to supplement individual therapy when suitable. In facilities where fewer than four patients are consistently being treated with the same or similar therapeutic interventions, group therapy programs may not always be appropriate. We expect all facilities to make the best clinical decisions when providing group therapy.

For the reasons discussed above and in the FY 2012 proposed rule (76 FR 26386 through 26388), as proposed, effective October 1, 2011, group therapy will be defined as therapy provided simultaneously to four patients who are performing the same or similar activities, and group therapy time will be divided by four in determining the reimbursable therapy minutes for each group therapy participant and, therefore, the appropriate RUG–IV group.

As discussed above and in the FY 2012 proposed rule, we believe it is appropriate to define group therapy as consisting of four participants. However, we will continue to monitor group therapy utilization and will continue to consult with clinical experts, professional therapy associations, and other stakeholders on this issue.

Comment: Many commenters questioned our choice of four as the most appropriate number of participants in a therapy group. Several commenters disagreed that the optimal number for patients in a group is four and stated that there is no research data to support this notion. Additionally, commenters stated that there are many instances when 2 or 3-person groups are more effective than 4-person groups and that in some specific instances, a 4-person group might pose serious patient risks. Many commenters stated that the choice of four as the optimal number for group therapy undermines the clinical judgment of therapists, and that CMS does not have the authority to dictate the practice of therapy and, therefore, cannot instruct therapists to allocate group therapy.

Response: For the reasons discussed above and in the FY 2012 proposed rule (76 FR 26386 through 26387), we believe the most appropriate size for group therapy in a SNF setting is four participants, which we believe is the size that permits the therapy participants to derive the maximum benefit from the group therapy setting. Although we conducted a literature search and were unable to find research data to support any prescribed number of participants in a therapy group, for the reasons stated above and in the FY 2012 proposed rule, we continue to believe it is appropriate to establish a standard that defines group therapy as therapy provided simultaneously to four participants performing the same or similar therapy activities.

In defining group therapy as therapy provided to four patients simultaneously who are performing the same or similar activities, we are not attempting to dictate clinical practice. Each therapist should use his or her best clinical judgment in determining the mode and manner in which to provide therapy services to patients. We understand that at times the therapist may decide in his or her clinical judgment to treat 2 or 3 patients simultaneously, and we are not prohibiting therapists from making this clinical decision. However, for purposes of Medicare payment policy, for the reasons discussed above and in the FY 2012 proposed rule, we are defining group therapy as therapy provided simultaneously to four patients who are performing the same or similar therapy activities. Further, we are allocating group therapy minutes by dividing the total minutes by four, the number of participants in a group therapy session as defined above. Our goal in allocating group therapy is to pay appropriately based on resource utilization and cost, not to dictate the practice of therapy.

Regarding the concept that groups of 4 may pose serious patient risks, we conducted a literature review and did not find any evidence that a group of 4 would pose any more of a patient risk than treating any other specific number of patients at a time. As discussed above, we expect therapists to use their best clinical judgment when choosing

which mode of therapy to use. If they believe that a particular mode of therapy would pose an increased degree of risk to a patient, we would expect them not to use that mode of therapy.

Comment: Several commenters stated that with the implementation of RUG–IV and its related policies, such as the allocation of concurrent therapy, we created a financial incentive for facilities to shift patients receiving concurrent therapy into group therapy, as long as the patient's therapy needs were still being met. These commenters stated that CMS should have expected some shift in the modes of therapy services provided. Additionally, these commenters believed that the data we used were inconclusive, since no data were collected on the modality of therapy delivered under MDS 2.0 and RUG–III. Others have stated that CMS' decision to use data from the STRIVE study is unsound because the STRIVE study was flawed. One commenter suggested that CMS should not allocate group therapy minutes until we have a full year's worth of data under the RUG–IV and MDS 3.0 system.

Response: We agree that the decision to allocate concurrent therapy inadvertently created an inappropriate financial incentive for facilities to emphasize more group therapy and that these incentives have resulted in excess Medicare expenditures. Accordingly, to fulfill our responsibilities to ensure appropriate payment based on resource utilization and cost, we proposed the allocation of group therapy minutes, which equalizes the reimbursement incentives across modes of therapy.

The statement that no data were collected to address the modality of therapy delivered under MDS 2.0 and RUG–III is incorrect. STRIVE collected data from the MDS 2.0 and RUG–III to examine the different modes of therapy delivery. Regarding the statement that the STRIVE study was flawed, we addressed this general concern in the FY 2010 final rule (74 FR 40304).

One commenter suggested that we defer allocating group therapy minutes until we have received more data. However, we believe we do not need a full year's worth of data before making changes to allocate group therapy. Regardless of whether the initial trends for utilization of group therapy continue, we believe that the group therapy allocation policy finalized in this final rule will increase the accuracy of our payments by more closely basing payments on actual resource utilization and cost and, thus, we believe that it is appropriate to finalize our policy regarding allocation of group therapy minutes effective October 1, 2011, as proposed.

Comment: Many commenters recognized the need to make changes to group therapy but suggested alternatives to the allocation of group therapy. Several commenters recommended that to reduce the incentive to overutilize group therapy, we should examine the current 25 percent cap on group therapy and make the necessary adjustments. One commenter suggested that we limit patients to one group therapy session per week.

Response: We appreciate the suggested alternatives to our proposal. We should note that the 25 percent cap for group therapy was designed to ensure that group therapy is utilized as an adjunct to individual (and concurrent) therapy. Conversely, the allocation of therapy minutes will be used to pay accurately for the therapy provided in a group therapy session based on resource utilization and cost. We also appreciate the suggestion to limit patients to one group therapy session per week and may explore this alternative or similar alternatives in the future in assessing the amounts of group therapy that may be beneficial to SNF patients.

Comment: Several commenters stated that the allocation of group therapy will cause operational inefficiencies in SNFs and will cause SNFs to need to hire more therapists in a field that currently has a significant shortage of professionals.

Response: We do not believe that the allocation of group therapy would cause operational inefficiencies or cause SNFs to hire more therapists. We note that the personnel decisions of SNFs are essentially private business arrangements that are outside the scope of this rule. Moreover, the allocation of group therapy does not require a change in MDS reporting procedures. As we stated in the FY 2012 proposed rule (76 FR 26387), as is currently the procedure, the SNF would report the total unallocated group therapy minutes on the MDS 3.0 for each patient. Then this total time would be automatically divided among the four group therapy participants to determine the appropriate number of RTM, and thus the RUG–IV classification and payment level for each patient. Thus, the allocation of group therapy will not require extra work on the part of SNF staff. Accordingly, we do not believe that allocation of group therapy minutes will cause operational inefficiencies in SNFs.

Comment: In the proposed rule, we solicited comments on types of patients for whom group therapy might be appropriate. We received several comments in response to this solicitation, which included different diagnoses (for example, aphasia) and treatment types (for example, a functional communication group). One commenter stated that while there are specific conditions that might prompt the consideration for group therapy, it is important for group therapy to be part of an integrated plan of care established under medical direction. Commenters noted that not all patients would benefit from group therapy, nor would all conditions be appropriate to incorporate into a group therapy program.

Response: We appreciate the comments which suggested various diagnoses and treatment types that might benefit from group therapy. As we stated in the proposed rule (76 FR 26387), group therapy is not appropriate for either all patients or all conditions and is primarily effective as a supplement to individual therapy. We agree with the comment noting that while there are specific conditions that might prompt the consideration of group therapy, it is important for group therapy to be part of an integrated plan of care established under medical direction. Additionally, we believe that diagnoses and treatment techniques (such as communication or feeding groups) should not be the sole basis for choosing to initiate group therapy. Therapists should determine for each resident, regardless of diagnosis or condition, whether the resident is a good candidate for group therapy based on functional level and treatment potential, and whether this particular form of treatment is in the patient's best interest and within the goals of the overall plan of care. We will take the commenters' suggestions under consideration in assessing the appropriate use of group therapy in SNFs and may address this further in future rulemaking.

Comment: One commenter requested clarification of a sentence in the proposed rule, which stated that ''As is currently the procedure, the SNF would report the total unallocated group therapy minutes on the MDS 3.0 (60 minutes in the scenario above) for each patient'' (76 FR 26387). The commenter believed that the number of group therapy minutes stated in the parentheses of the above sentence, given the scenario referred to in that sentence, should be 120.

Response: After reviewing the sentence quoted above from the proposed rule (76 FR 26387), we agree with this commenter and wish to clarify that there is an error in this sentence. In the above-quoted sentence from the FY

2012 proposed rule, the minutes referred to in the parentheses should read 120 minutes rather than 60 minutes, given the immediately preceding scenario to which it refers. Thus, this sentence should have stated, ''As is currently the procedure, the SNFs would report the total unallocated group therapy minutes on the MDS 3.0 (120 minutes in the scenario above) for each patient.''.

Comment: One commenter suggested that an inconsistency of CMS's definition of group therapy between the FY 2010 final rule (74 FR 40315) and the MDS RAI Manual (Chapter 3, Section O) may have led to the increase in group therapy utilization. The commenter specifically references the words ''same'' versus ''similar'' as regards to type of group therapy services/activities. This commenter recommended that CMS make the definitions of group therapy consistent between the regulations and the RAI Manual.

Response: In the FY 2010 final rule (76 FR 40315), we stated that group therapy is therapy where a ''therapist provides the same services to everyone in the group.'' We note that later in the preamble of the FY 2010 final rule (74 FR 40317), we define group therapy as ''consisting of 2 to 4 patients (regardless of payer source) who are performing similar activities * * *'' In the RAI Manual (Chapter 3, Section O)], group therapy is also defined as ''the treatment of 2 to 4 residents, regardless of payer source, who are performing similar activities, * * *.'' We do not believe that this inconsistency in the definition may have led to the increase in group therapy utilization as we are not aware of evidence to support this claim. Additionally, we provided extensive training to providers both prior to and after the implementation of MDS 3.0. At the time of training, we did not receive questions on this issue, suggesting that there was not a significant amount of confusion on this point. To clarify, from this point forward, the definition of group therapy will be consistent in regulation and in the RAI manual. For the purposes of coding group therapy for Medicare Part A SNF payment, the existing definition of group therapy has been: 2–4 patients (regardless of payer source) who are simultaneously performing the same or similar activities and are supervised by a therapist (or assistant) who is not supervising any other individuals. However, as discussed in this final rule, beginning October 1, 2011, this definition will be: 4 patients (regardless of payer source) who are simultaneously performing the same or similar activities and are supervised by a therapist (or assistant) who is not supervising any other individuals. For purposes of coding concurrent therapy for Medicare Part A SNF payment, the definition of concurrent therapy will remain: therapy consisting of 2 patients who are not performing the same or similar activity (regardless of payer source), both of whom must be in line-of-sight of the treating therapist (or assistant).

Comment: Several commenters supported the clarification of our expectations for documenting group therapy services. Some commenters stated that rehabilitation professionals need to support the work they do through documentation, and that the documentation should reflect the need for skilled care as well as demonstrate how the therapy provision will support patients' needs and goals. Further, professional therapy associations commented on the documentation clarifications, stating that the requirement for adequate documentation to justify the use of each mode of therapy is necessary and that there should be no additional burden to provide this documentation, as it should be a standard part of any documentation. Others expressed concern that we proposed new and stricter guidelines for documenting group therapy. Some commenters stated that requiring a therapist to document why a specific mode of therapy was chosen for a patient would create an undue burden on the therapist. One commenter stated that requiring an additional, separate plan of care for group therapy would not improve the quality or efficacy of this mode of therapy delivery, and that it would be a disincentive for clinicians to perform group therapy due to the increased paperwork.

Response: We would like to clarify that we did not propose new documentation requirements for group therapy provision. In fact, these documentation requirements have been in place all along, and the intent of the discussion in the proposed rule was to clarify our expectations. Contrary to the commenter's statement, we are not requiring an additional, separate plan of care for group therapy. The regulations at § 409.17(c) and § 409.23(c) require that, in order for Medicare to pay for therapy in a SNF, a therapy plan of care must be in place and that it must include certain information. In the FY 2012 proposed rule (76 FR 26387 through 26388), and as discussed previously, we simply clarified what we expect to be included in the plan of care and supporting medical record documentation in cases where group therapy is provided.

Therefore, as this discussion in the proposed rule simply clarified existing expectations, we do not agree that these documentation guidelines will increase or create undue burden on therapists, or that these guidelines create a disincentive for clinicians to perform group therapy due to increased paperwork. As the commenters above suggested, there should be no additional burden to provide this documentation, as it should be a standard part of any documentation. We agree with those commenters who stated that rehabilitation professionals need to support the work they do through documentation, and that the documentation should reflect the need for skilled care and the mode of therapy provided, as well as demonstrate how the therapy provision will support patients' needs and goals.

Comment: One commenter stated that the clarification of CMS coverage and documentation expectations included in the proposed rule inappropriately broadens the documentation requirements of group therapy by applying standards beyond those found in the current law and regulations for SNF care. Specifically, the commenter indicated that the clarification incorrectly applies hospital regulations and inaccurately characterizes guidelines set forth in program manuals as binding for SNFs. This commenter recommended that CMS clarify therapy documentation requirements using only SNF law and regulations.

Response: We do not agree with the claim that the requirement to establish structured and well-documented group therapy programs applies to hospitals but not to SNFs. We would note that while it is the regulations themselves from which legal authority derives, the program manuals and other interpretive guidelines can serve to clarify or interpret the regulations set forth in the Code of Federal Regulations (CFR). The clarifications set forth in the FY 2012 proposed rule (76 FR 26387 through 26388) are based on regulations at § 409.17 and § 409.23, and interpretive guidance in the RAI Manual, all of which are applicable to SNFs. While the cited regulations in the proposed rule, specifically § 409.17(b) through (d), fall within Part 409, Subpart B (Inpatient Hospital Services and Inpatient Critical Access Hospital Services), these particular regulations also apply to SNFs with regard to their patients' plans of care and for guidance on specific documentation requirements. Specifically, § 409.23, which is located in Part 409, Subpart C (Posthospital SNF

Care), states that Medicare pays for SNF therapy services if they are furnished, among other things, in accordance with a plan of care that meets the requirements of § 409.17(b) through (d), thereby making § 409.17(b) through (d) applicable to SNFs. When we initially revised the SNF therapy regulations at § 409.23(c) to incorporate these plan of care requirements in the Medicare Physician Fee Schedule final rule for Calendar Year (CY) 2008 (72 FR 66331, November 27, 2007), we noted our belief that ''* * * therapy services should be provided according to the same standards and policies in all settings, to the extent possible and consistent with statute.'' Moreover, in the Medicare Physician Fee Schedule final rule for CY 2011 (75 FR 73583, November 29, 2010), we revised the hospital regulations at § 409.17(d) on therapy treatment plans—to which the corresponding SNF therapy regulations cross-refer—specifically to clarify that those particular hospital regulations also apply to SNFs. Thus, our clarifications do not exceed the current law and regulations applicable to SNFs.

Further, we do not agree with the commenter's implicit assumption that program guidelines are not relevant to this process. We note that such guidelines are based on the provisions of the regulations, and are made available to each provider to advise it of those provisions as well as of CMS's or the surveyor's expectations. While these guidelines are disseminated to providers, all providers are nevertheless expected to comply fully with the regulations on which the guidelines are based.

For the reasons discussed in section V.C of the FY 2012 proposed rule (76 FR 26386 through 26388), and for the reasons discussed in this final rule above, we are finalizing our proposed policies related to group therapy effective October 1, 2011. First, we are defining group therapy as therapy provided simultaneously to four patients (regardless of payer source) who are performing the same or similar activities and are supervised by a therapist (or assistant) who is not supervising any other individuals (76 FR 26386 through 26387). In addition, we are finalizing our proposed policies related to the reporting and allocation of group therapy minutes as discussed above and in the FY 2012 proposed rule (76 FR 26387). As is currently the procedure, the SNF will report the total unallocated group therapy minutes on the MDS 3.0. In terms of RUG–IV classification, this total time will be allocated (that is, divided) among the four group therapy participants to determine the appropriate number of RTM and, therefore, the appropriate RUG–IV therapy group and payment level, for each participant. In addition, as discussed above, if one or more of the four group therapy participants are unexpectedly absent from a session or cannot finish participating in the entire group session, rather than discontinuing payment or requiring the session to be rescheduled, we will continue to deem the therapy session as meeting the definition of group therapy as long as the therapy program originally had been planned for four patients. In this situation, we will continue to assume that there are four patients, and therefore will divide the therapy minutes by four in allocating group therapy minutes among the group therapy participants.

4. Proposed Changes to the MDS 3.0 Assessment Schedule and Other Medicare-Required Assessments

In the FY 2012 proposed rule (76 FR 26388 through 26393), we proposed to make certain modifications to the MDS assessment schedule and to the types of assessments to be completed. To receive proper payment for services provided during Part A Medicare SNF stays, SNFs must complete patient assessments in accordance with the assessment schedule established by CMS at § 413.343(b) and in the RAI Manual, version 3.0, Chapter 2. As we explained in the FY 2012 proposed rule (76 FR 26388 through 26389), we proposed to modify the current Medicare-required assessment schedule to incorporate new assessment windows and grace days to capture more appropriately the changes in patients' status and in services and treatments provided over the course of a stay, and to reduce the possibility that information from the same days of the patient's stay may be used on different scheduled MDS assessments. The current MDS assessment schedule and the proposed MDS assessment schedule may be found in Tables 10A and 10B in the proposed rule (76 FR 26389).

Additionally, regarding the completion of unscheduled PPS assessments, in the proposed rule (76 FR 26389 through 26390), we clarified the End of Therapy (EOT) OMRA policy (which first appeared in the FY 2010 final rule (74 FR 40347 through 40348)) by stating that the ARD for an EOT–OMRA must be set for 1 to 3 days after the discontinuation of all therapies, regardless of the reason for the discontinuation. Further, in determining the ARD for the EOT OMRA, we clarified that, as finalized in the FY 2010 final rule (74 FR 40348), currently days are counted differently for facilities that regularly provide therapy services 5 days per week as compared to facilities that regularly provide therapy services 7 days a week. Following the publication of the FY 2010 final rule, some SNFs expressed concern over the use of the phrase ''discontinuation of therapy services,'' as well as the distinction between 5- and 7-day-a-week facilities in determining the ARD for the EOT OMRA. In the FY 2012 proposed rule (76 FR 26389), we clarified that the term ''discontinuation of therapy services'' referred to both temporary, unplanned and planned discontinuations of therapy services. Accordingly, in the FY 2012 proposed rule (76 FR 26389 through 26390), we clarified that providers must complete an EOT OMRA for a patient classified in a RUG–IV therapy group if the patient goes 3 consecutive days without therapy, regardless of the reason for the discontinuation. Moreover, to mitigate confusion related to the distinction between 5-day and 7-day-a-week facilities, we proposed to eliminate the distinction altogether. We proposed that, effective October 1, 2011, an EOT OMRA would be required for a patient classified in a RUG–IV therapy group if that patient is not furnished any therapy services for 3 consecutive calendar days, regardless of whether the facility is a 5-day or 7-day facility. As we stated in the FY 2012 proposed rule (76 FR 26390), we believe that this policy appropriately reflects that the frail and vulnerable populations within SNFs require consistent therapy without significant breaks in services, and is consistent with § 409.34(b) (which states that a break of one or two days would not necessarily result in a provider having to complete an EOT OMRA).

In addition, in the proposed rule (76 FR 26390 through 26391), we addressed suggestions that the completion of an EOT OMRA and a subsequent Start-of-Therapy (SOT) OMRA may not be necessary for all patients, particularly in cases where therapy services resume at the same mode and intensity as the patient was receiving before the discontinuation of therapy. Therefore, for the reasons discussed in the proposed rule (76 FR 26390 through 26391), we proposed that, effective for services provided on or after October 1, 2011, when an EOT OMRA has been completed and therapy subsequently resumes, SNFs may complete an End-of-Therapy-Resumption (EOT–R) OMRA rather than an SOT OMRA, in cases where the resumption of therapy date is no more than 5 consecutive calendar days after the last day of therapy provided, and the therapy services have

resumed at the same RUG–IV classification level that had been in effect prior to the EOT OMRA. In the FY 2012 proposed rule, we stated that in the situation where therapy services have resumed within such a short period of time at the same RUG–IV classification level, we do not believe that a new therapy evaluation and SOT OMRA would be necessary to reclassify the patient back into a RUG–IV therapy group because, given that the therapy resumed at the same RUG–IV classification level, it is likely that the patient's clinical condition has not changed.

In addition, as discussed in the proposed rule (76 FR 26391), we have found some cases where therapy services recorded on a given PPS assessment did not provide an accurate account of the therapy provided to a given resident outside the observation window used for the most recent assessment. We believe that when service levels change, whether inside or outside the observation period, such changes should be based on medical evidence. However, we believe that the current range of PPS assessments may not permit SNFs adequate flexibility to report such changes in therapy services outside the observation window. As discussed in the FY 2012 proposed rule (76 FR 26392), we believe that such changes in resident status outside the observation window do not always generate an unscheduled assessment because the changes, while significant for payment, do not always rise to the level of a significant change in clinical status under § 483.20(b)(2)(ii). Accordingly, we proposed (76 FR 26392) that, effective for services provided on or after October 1, 2011, SNFs would be required to complete a Change of Therapy (COT) OMRA, for patients classified into a RUG–IV therapy group, whenever the intensity of therapy (that is, the total reimbursable therapy minutes, or RTM delivered) changes to such a degree that it would no longer reflect the RUG–IV classification and payment assigned for a given SNF resident based on that resident's most recent assessment used for Medicare payment. The COT OMRA would be a new type of required PPS assessment. The ARD of the COT OMRA would be set for Day 7 of a COT observation period, which is a successive 7-day window beginning on the day following the ARD set for the most recent scheduled or unscheduled PPS assessment (or beginning the day therapy resumes in cases where an EOT–R OMRA is completed), and ending every 7 calendar days thereafter. We proposed that SNFs would be required to complete a COT OMRA only if a patient's total RTM changes to such an extent that the patient's RUG classification, based on their last PPS assessment, is no longer an accurate representation of their current level of therapy.

We received a number of comments on these proposals and clarifications which, along with our responses, appear below.

Comment: Many commenters supported the changes to the MDS assessment schedule and agreed that the current assessment schedule does allow providers to use information from the same days of the patient's stay on different scheduled MDS assessments intended to capture changes in the patient's condition over time.

Others suggested that CMS conduct a detailed analysis to determine the efficacy of the proposed changes prior to implementation. These commenters opposed changes to the assessment schedule based on their belief that the changes would not reduce the frequency with which information from the same days of the patient's stay is used on different scheduled MDS assessments. Other commenters raised concerns that the proposed changes to the assessment schedule would limit flexibility in scheduling assessments and would be burdensome because the shorter window for providers to set the ARD for a scheduled PPS assessment would reduce the SNF staff's ability to stagger MDS due dates among residents.

One commenter stated that the proposed changes to the MDS schedule and assessments will take the clinical judgment away from licensed therapists. This commenter stated that the use of clinical judgment is crucial in ensuring that the patients receive needed services for which they qualify and that produce a positive clinical outcome. One commenter expressed concern that the proposed changes to the MDS assessments and schedules would impose an additional burden on software vendors, billing offices, and medical records personnel. Furthermore, the commenter stated that the proposed changes would affect MDS scheduling tools, calendars, billing effective dates, budget, and billing reports.

Response: We are pleased with the comments received in support of the proposed changes. Prior to proposing changes to the assessment schedule, we did conduct a detailed analysis on the likely effect of the updated policies. For this reason, we do not agree that the proposed changes to the MDS assessment schedule should be withdrawn until another study is completed. However, as with all new and revised policies, we will monitor the effects of the changes, and make any necessary modifications through future rulemaking. We recognize that, while the proposed changes eliminated most of the overlap in setting the observation periods for Medicare-required scheduled assessments, it is impossible to eliminate totally the potential for information from the same days of the patient's stay to be used on different scheduled MDS assessments, since changes in a beneficiary's condition can also require completion of several different types of unscheduled assessments (such as OMRAs, discharge assessments, significant change assessments, *etc.*) within short periods of time. However, as discussed in the proposed rule (76 FR 26388 through 26389), we believe by making the proposed changes to the assessment schedule (that is, by narrowing the assessment and grace day windows), we reduce the amount of information from the same days of the patient's stay that may be used on different scheduled MDS assessments while still allowing providers some flexibility in setting the ARD.

In terms of regular scheduled PPS assessments, the 5-day and 14-day scheduled Medicare assessments are used to determine payment for the first 30 days of a SNF stay. Under the current policy, it is possible that the clinical characteristics of a resident on days 5 through 8 of the resident's stay could be used on both the 5-day and 14-day assessments. In such a case, this effectively reduces the number of days that clinical information is collected and used to observe changes in the patient's condition over time. In cases where this overlap is used, payment is established for the first 30 days of the patient's stay based on only 10 days of service, with 4 days overlapping between observation windows, rather than the intended 14 days of service with little to no overlap between observation periods. We are confident that the proposed changes allow sufficient time to perform all required assessments, allow for flexibility in scheduling the assessments, and provide a more accurate method for determining payment across the entire 30-day period. As discussed above, we believe that these changes are necessary to reduce the possibility that information from the same days of the patient's stay may be used on different scheduled MDS assessments and to allow us to capture more appropriately the changes to patients' status and in

services and treatments provided over the course of a SNF stay and, as such, these changes will allow us to reimburse more accurately for SNF services.

Additionally, we do not agree that our proposed changes to the MDS schedule and assessments would take away clinical judgment from therapists. As discussed in the FY 2010 final rule, we are responsible for determining Medicare coverage and payment policy, that is, ''the scope of services that will be paid for by the Medicare program under the SNF PPS and the manner in which those services will be reported and paid'' (74 FR 40316). It is true that our proposed changes to the MDS assessments and schedules will affect the reporting and reimbursement of SNF services, including therapy services; however, we have not mandated the manner of providing these services. We agree that the licensed therapists are to use their clinical judgment to treat the patients in the most appropriate manner, and to maintain professional standards while providing all necessary services.

With regard to commenters' concern related to the burden arising from changes in the MDS assessment schedule and assessments, we would note that we gave draft specifications to vendors as soon as possible after we published the proposed rule. We acknowledge that the proposed changes to the MDS schedule and assessments may affect items listed by the commenter (scheduling tools, calendars, billing effective dates, budget, and billing reports), but believe that, for the reasons outlined here and in the proposed rule, such changes are nevertheless necessary to provide appropriate payment for services provided to residents, to enhance the reliability of the MDS, and to ensure the stability of the SNF PPS.

Comment: One commenter stated that in practice, by reducing the length of the assessment windows, we have minimized the usefulness of grace days to providers, and suggested that we officially eliminate the concept of grace days. Other commenters requested that we remove the grace days from the assessment schedule completely, and combine them with the ARD days. On the other hand, several commenters recommended expanding the assessment window to allow providers more flexibility in using grace days when determining the observation period. These commenters were concerned that, as CMS has stated that grace days should be used sparingly, any claim which makes use of an assessment where grace days are used might be considered as potentially inappropriate and subject to medical audit.

Response: Grace days are a longstanding part of the SNF PPS in order to allow clinical flexibility when setting the ARD dates of scheduled PPS assessments. We agree that in practice, there is no difference between regular ARD windows and grace days and we encourage the use of grace days if their use will allow a facility more clinical flexibility or will more accurately capture therapy and other treatments. Thus, we do not intend to penalize any facility that chooses to use the grace days for assessment scheduling or to audit facilities based solely on their regular use of grace days. We may explore the option of incorporating the grace days into the regular ARD window in the future; nevertheless, we will retain them as part of the assessment schedule at the present time consistent with the current policy and the new assessment schedule proposed in the proposed rule.

Comment: Many commenters supported the proposed change to consider all facilities 7-day facilities for purposes of setting the ARD for the EOT OMRA and the clarification that facilities are required to complete an EOT OMRA to classify residents into non-therapy RUG categories when therapy has been missed for 3 consecutive days. Others believed that an EOT OMRA should only be required if three scheduled days of therapy are missed, rather than unscheduled days, since it may be possible for a patient to receive the required amount of weekly therapy while still not being provided with any therapy for 3 consecutive days. Many commenters stated that it would not be unusual for patients to have 3-day lapses in therapy, especially if a weekend were involved. The commenters explained that it is common for patients in the SNF population to have brief episodes of illness or refusals, doctor appointments, or religious holidays that may cause a missed therapy day on a Friday or Monday, and that requiring an EOT OMRA following 3 consecutive calendar days of missed therapy is not logical, as it will entail a provider burden of additional paperwork.

Response: We are pleased that some commenters supported the proposal to eliminate the distinction between 5–day and 7-day facilities and to apply a uniform policy in setting the ARD for the EOT OMRA. However, we do not agree with comments that an EOT OMRA should only be required if 3 scheduled days of therapy are missed, rather than any three consecutive day periods. As stated in § 409.31(b)(1), to meet the skilled level of care requirement for coverage of post-hospital SNF care, ''the beneficiary must require skilled nursing or skilled rehabilitation services, or both, on a daily basis.'' Additionally, the criteria for ''daily basis'' under § 409.34(a)(2) state, '' As an exception, if skilled rehabilitation services are not available 7 days a week those services must be needed and provided at least 5 days a week.'' Therefore, according to these regulations, while a facility may determine that it does not have adequate resources to provide therapy 7 days a week, the facility is still required to ensure that therapy is provided for at least five days a week. In addition, the policy requiring an EOT OMRA to be completed when therapy has been discontinued for 3 consecutive calendar days is consistent with our discussion of § 409.34(b) in the FY 2010 final rule (74 FR 40348), in which we stated that a break of 1 or 2 days would not necessarily result in a provider having to complete an EOT OMRA. As we stated in the FY 2012 proposed rule (76 FR 26390), we believe that the policy of requiring all SNFs to set the ARD for the EOT OMRA by the third consecutive calendar day after the last day of therapy was provided appropriately reflects that the frail and vulnerable populations within SNFs require consistent therapy without significant breaks in service. Accordingly, we believe that regardless of whether the missed therapy day was scheduled, and no matter what the reason was for the missed therapy, if the resident missed 3 consecutive calendar days of therapy, we believe an EOT OMRA should be completed.

Commenters cited several specific examples of situations that would cause a resident to miss therapy. We realize that there may be a variety of reasons that therapy would be missed, whether the reason for the missed therapy was planned or unplanned. At the same time, it is the facility's responsibility to ensure that patients receive ongoing, rather than sporadic, care to promote each patient reaching his or her full potential. Thus, we emphasize that the EOT OMRA should be completed if therapy was missed for 3 consecutive calendar days for *any* reason, planned or unplanned. Additionally, the idea that a resident can receive the required amount of weekly therapy while still not being provided therapy for 3 consecutive days, as suggested by the commenter, assumes that there is a prescribed ''Medicare therapy week''. It should be noted, however, that there is no prescribed ''Medicare therapy week''

that spans across any specific days. Therapy utilization is measured across a rolling 7-day period as reported on the MDS assessments. Thus, for the reasons discussed above, the EOT OMRA should always be completed when a resident misses 3 consecutive calendar days of therapy.

Comment: One commenter recommended that CMS recalibrate the therapy thresholds, specifically in the Ultra High and Very High Rehabilitation RUG categories to distribute minutes more accurately and to establish more realistic sub-categories.

Response: We appreciate the commenter's recommendation. We intend to monitor these policies as well as provider behavior and we may consider such approaches in the future.

Comment: Several commenters requested additional guidance and clarification on the requirements for providing a SNF Advance Beneficiary Notice of Noncoverage (SNF ABN) or an expedited determination notice, also known as the Notice of Medicare Non-Coverage (NOMNC) when a beneficiary misses 3 consecutive days of skilled therapy and will enter into a noncovered stay because they will no longer be receiving skilled services. One commenter thought that CMS required a SNF ABN to be issued 48 hours prior to the delivery of noncovered care. The commenter was concerned that this 48-hour SNF ABN delivery ''requirement'' could not be met when a beneficiary receives no therapy on a weekend and refuses therapy on Monday.

Response: The SNF ABN is issued prior to delivering services for which Medicare might not pay because they are not medically reasonable and necessary and/or constitute custodial care, and the beneficiary is expected to receive these services and possibly incur financial liability. The policy for issuance of the SNF ABN has not changed in light of the policies being finalized in this rule. Please see the current manual instructions for the SNF ABN in the Medicare Claims Processing Manual, IOM 100–04, Chapter 30, Section 70, which can be accessed via this link: *http://www.cms.gov/Manuals/IOM/list.asp*.

There is no ''48-hour notice'' requirement associated with the SNF ABN. However, the SNF ABN should be given in a timely manner to provide the beneficiary or the representative sufficient time to make an informed decision about whether to receive care that may not be covered by Medicare, and/or make other arrangements for care. SNF providers should issue the SNF ABN as soon as it is clear that the beneficiary may enter into a non-covered stay.

We appreciate the commenters' concerns regarding understanding the requirements for the issuance of the SNF ABN in light of this rule; however, as noted previously, our policies related to issuance of the SNF ABN remain unchanged. Specifically, the timing of SNF ABN delivery remains unchanged, and as per current policy and as discussed above, it should be given prior to delivery of care for which Medicare might not pay, allowing the beneficiary or the representative a reasonable amount of time to make an informed decision about whether to receive the care and/or make other arrangements for care. Finally, we note that where the beneficiary misses 3 consecutive days of skilled therapy and will enter into a noncovered stay, either because therapy is not offered on those days or the beneficiary refuses or declines therapy, or any combination of the preceding, it is unlikely that a provider will need to issue the NOMNC. The NOMNC is a notice issued prior to the termination of Medicare-covered services, when the provider determines that such services are no longer covered based on Medicare coverage policies (see 42 CFR §§ 405.1200 and 405.1202). The NOMNC informs the beneficiary of the right to appeal the discontinuation of covered services. Our policies regarding issuance of an NOMNC have not changed in light of this rule. Consistent with current policy, if SNF covered services end solely because a beneficiary fails to meet the consecutive days of therapy requirement for the reasons set forth above, the NOMNC would not be issued. The NOMNC is a provider notice of termination of services and is not issued when a beneficiary initiates the end of care. The NOMNC is also not issued when care ends for provider business reasons, such as when a SNF does not offer therapy on certain days. We intend to publish guidance on NOMNC delivery in the Medicare Claims Processing Manual in the near future. We will also include further clarification on NOMNC delivery in other vehicles, such as CMS Open Door Forums, as deemed necessary.

Comment: Several commenters have stated that the requirement of the EOT OMRA after discontinuation of therapy for 3 consecutive days inhibits facilities from gradually reducing therapy services as residents approach the end of their SNF stay. The commenters explained that it is common to reduce the frequency and intensity of treatment prior to facility discharge to assure the resident will maintain their current level of function without the need for daily therapy.

Response: We do not agree that the requirements to complete an EOT OMRA following discontinuation of therapy for three consecutive calendar days discourages facilities from gradually reducing therapy services prior to discharge. The EOT OMRA would only need to be completed if 3 consecutive calendar days of all three therapy disciplines were missed. We believe that it is likely to be inconsistent with good clinical judgment for practitioners to purposely not provide any rehabilitation services in a 3-day period prior to an imminent discharge, especially given the frail and vulnerable nature of SNF populations.

Comment: Several commenters remarked that the requirement to complete an EOT OMRA after 3 consecutive days of missed therapy will negatively affect residents who are classified into Low Rehabilitation RUG groups. They stated that facilities might be required to complete an EOT OMRA on a weekly basis if these residents do not receive therapy on a Monday or Friday.

Response: Residents who fall into the Rehabilitation Low RUG groups continue to benefit from skilled therapy. Even though their conditions indicate that they only need to receive therapy for a minimum of 45 minutes per week over at least 3 days to be classified into these RUG groups, we believe that a significant break in therapy services may still be detrimental to their therapy goals and recovery. For example, if a facility treats one of these residents on a Monday, Tuesday, and Wednesday and they do not have another treatment session until the following Monday or Tuesday, this resident will go for 4 or 5 consecutive calendar days without therapy services. We believe that this significant break in therapy may cause this resident to regress from functional gains made during therapy thus far. For this reason, we require that an EOT OMRA also be completed for residents who are in the Rehabilitation Low RUG groups, when therapy services have been discontinued for 3 consecutive calendar days.

Comment: We have received numerous comments stating that providing 7-day-a-week therapy for rural facilities is very difficult. The commenters stated that it is quite possible that the EOT OMRA would be triggered frequently by 3 missed days of therapy over the weekend plus the adjoining days. The commenters suggested that the policy that requires an EOT OMRA in the event of 3 missed

days of therapy should be revised to at least 4 missed days.

Response: We recognize the concern of the rural facilities. However, our primary concern is that the SNF residents receive daily skilled rehabilitation as required under §§ 409.31 and 409.34. We expect that rural facilities and SNFs that cannot meet the ''daily basis'' requirement under § 409.34 will revisit their hiring and staffing practices as well as recruitment and retention options to assure they have the appropriate amount of staff to ensure that daily skilled care can be provided. Additionally, if facilities are having difficulty meeting the daily skilled needs of the residents in their care, they should also revisit their admissions policies and determine if they are accepting patients for whom they have the resources to provide the necessary daily skilled therapy services.

We do not agree with the suggestion to allow SNFs to discontinue therapy for 4 consecutive days prior to completing the EOT OMRA. As stated above, § 409.34 requires skilled nursing and/or rehabilitation services on a daily basis. We have made limited allowances for facilities that are unable to provide therapy services 7 days a week based on logistical constraints; however, we still expect SNFs to provide an adequate amount of skilled rehabilitation services to meet the patient's clinical needs. Allowing 4 missed days of therapy prior to completion of the EOT OMRA would undermine this concept. As we stated previously, the EOT OMRA policy we proposed and are finalizing in this final rule reflects that the frail and vulnerable populations in SNFs require consistent therapy without significant breaks in service.

Comment: One commenter asked if it is possible for computer software to calculate the appropriate RUG when therapy ends without another MDS being completed.

Response: The information needed to calculate a non-therapy RUG–IV group when therapy is discontinued is only reported on the MDS. The only option for automating the recalculation of the RUG–IV group would be to use a previously-submitted MDS. Since that assessment would reflect the beneficiary's condition in a prior period rather than the patient's condition when therapy ended, there would be no way to determine the most appropriate non-therapy RUG category for the patient from that assessment.

Comment: Many commenters stated that the proposed COT OMRA could accommodate for the missed 3-day treatment scenarios that necessitate EOT OMRA completion.

Response: We do not agree that the COT OMRA could address both changes in therapy provision and missed therapy days. The intent of the EOT OMRA is to pay SNFs the per diem medical RUG rate for the consecutive days that the resident did not receive therapy services. The COT OMRA addresses changes in minutes of therapy provided, not missed days.

Comment: Several commenters asked us to define the term ''treatment day'' for purposes of the EOT OMRA. These commenters asked us if a resident received less than 15 minutes of therapy a day, whether this time could still count toward the definition of a ''treatment day'' rather than as a missed therapy day.

Response: For purposes of determining when an EOT OMRA must be completed, a treatment day is defined exactly the same way as in the RAI Manual in Chapter 3, Section O, page O–16: 15 minutes of therapy a day. If a resident receives less than 15 minutes of therapy in a day, it is not coded on the MDS and it cannot be considered a day of therapy.

Comment: Several commenters expressed confusion about the process of re-starting therapy after an EOT OMRA was completed. Some were unsure about when to complete an SOT OMRA or an EOT–R OMRA. Others asked whether a new therapy evaluation is necessary in all cases of resumption. Additionally, although many commenters supported the proposal to implement the optional EOT–R OMRA, and approved of this option to lessen the burden of SNFs when the need to complete the EOT OMRA arose, many others expressed confusion and/or requested clarification as to whether the EOT–R OMRA is a new assessment type or a modification of an old assessment.

Response: As explained in the proposed rule (76 FR 26389 through 26390), the ARD for the EOT OMRA must be set 1 to 3 consecutive calendar days following the last day of therapy. Under current policy, if the patient was discharged from therapy with no expectation for it to continue or restart, then the EOT OMRA would classify the resident into a non-therapy RUG group which would be the basis of payment until the next PPS assessment. However, even if the resident was not discharged from therapy services and missed 3 or more consecutive days of therapy, an EOT OMRA still would have to be completed to classify the resident into a non-therapy RUG group for those days of missed therapy.

As explained in the FY 2012 proposed rule (76 FR 26390 through 26391), we recognize that the completion of an EOT OMRA and subsequent SOT OMRA may not be necessary for all patients. This may be the case where therapy was discontinued (for example, due to non-clinical reasons such as scheduling conflicts), and resumes shortly thereafter at the same RUG classification level. Therefore, we proposed the option to complete an EOT with Resumption or an EOT–R OMRA, rather than an SOT OMRA, in cases where the therapy resumption date is no more than 5 consecutive calendar days following the last day of therapy provided and the therapy services have resumed at the same RUG–IV classification level that had been in effect prior to the discontinuation of therapy services. As we stated in the FY 2012 proposed rule (76 FR 26390), in the situation where therapy services have resumed within such a short period of time at the same RUG–IV classification level, we do not believe that a new therapy evaluation and SOT OMRA would be necessary to reclassify the patient back into a RUG–IV therapy group because, given that the therapy resumed at the same RUG–IV classification level, it is likely that the patient's clinical condition has not changed. We appreciate the support for the proposal of the EOT–R OMRA.

We would like to clarify that the EOT–R OMRA is not a new assessment type. As explained in the FY 2012 proposed rule (76 FR 26390), it is an EOT OMRA with two additional items (O0450A and O0450B) to indicate whether therapy is expected to resume and the date of resumption of therapy. As stated above, an EOT–R OMRA may be used when therapy has been missed for at least 3 consecutive calendar days and is expected to resume (and actually does resume) within 5 calendar days following the last day of therapy. For example: Mr. A. received therapy every day Monday through Friday. He missed therapy on Saturday and Sunday because the SNF he was in did not provide therapy during the weekend. On Monday, Mr. A.'s family came to visit and he refused therapy. At this point, Mr. A. missed three days of therapy and an EOT OMRA would be required. He also missed therapy on Tuesday, due to a scheduled doctor's appointment. The interdisciplinary team made the determination that Mr. A.'s missed therapy did not result in a change in clinical condition that would make him tolerate less therapy and change his RUG–IV classification. Therefore, the facility completed an EOT OMRA on Monday indicating that

therapy had not occurred for at least three days. Then, on Wednesday, the EOT is modified into an EOT–R by reporting the actual date of resumption, which was Wednesday. In this case, a new therapy evaluation was not required and Mr. A resumed therapy on Wednesday at the same RUG–IV classification level.

If the reason for missed therapy was clinical in nature (meaning there was a possibility that the resident's clinical therapy status was affected by the missed therapy), it may not be appropriate for the facility to complete an EOT–R OMRA. In cases where the patient resumes therapy more than 5 consecutive calendar days after discontinuation of therapy services or where the patient resumes therapy at a different RUG classification level (even if it is no more than 5 consecutive calendar days after the date the last therapy service was furnished), an EOT–R OMRA cannot be used. In this case, the facility could either complete an optional SOT–OMRA and new therapy evaluation if therapy resumes, or wait until the completion of the next scheduled PPS assessment to classify the resident into a RUG–IV group. If the facility chooses not to complete an SOT OMRA and if the next scheduled PPS assessment is used to classify the patient into a therapy RUG group, a new therapy evaluation would also be required. Thus, in situations where an EOT OMRA was completed and therapy subsequently resumes, a new therapy evaluation is required when either an SOT OMRA or a scheduled PPS assessment is used to classify the resident into a RUG–IV therapy group. For example: Mr. B. received therapy every day Wednesday through Monday. On Tuesday, he felt ill and missed therapy that day and Wednesday. He then went to dialysis on Thursday and missed therapy that day as well. He missed a total of 3 days of therapy. Due to his illness and dialysis, he could not immediately resume therapy at the same level he was receiving prior to the three missed days. However, on Friday he felt well enough to start therapy again. The facility completed an EOT OMRA on Thursday to classify Mr. B. into a non-rehabilitation RUG group and to get paid the non-rehabilitation RUG rate for Tuesday, Wednesday, and Thursday. As Mr. B. could not resume therapy at the same RUG–IV classification level, a new therapy evaluation was completed by each discipline (physical therapy, occupational therapy, and/or speech therapy) treating Mr. B. and then an SOT OMRA was completed, and he was placed back into a rehabilitation RUG group. The facility was paid at the rehabilitation RUG rate from the day therapy restarted until the next PPS assessment was completed.

Comment: One commenter highlighted a potential error in an example we provided on page 26392 of the proposed rule, where we stated that ''* * * paid for Days 36 through 39 at the corresponding non-therapy rate, based on the patient's clinical condition reported on the 30-day assessment (because therapy services were discontinued on Day 36 and an EOT OMRA was completed) * * *'' (76 FR 26392). According to this commenter, the phrase ''30-day assessment'' should be replaced by ''EOT OMRA'' because the non-therapy RUG on the EOT OMRA is used to establish the payment for services during the period where no therapy services are provided.

Response: After careful review of the example in the proposed rule cited by the commenter, we agree with the commenter that we misstated the relevant assessment that would determine payment for Days 36 through 39 in the example provided. The text quoted above on page 26392 of the proposed rule should read ''* * * paid for Days 36 through 39 at the corresponding non-therapy rate, based on the patient's clinical condition reported on the EOT OMRA (because therapy services were discontinued on Day 36 and an EOT OMRA was completed) * * *'', as this accurately reflects how the payment for this resident would be calculated. We have reviewed the remainder of the example and found no additional errors.

Comment: Several commenters questioned whether therapy service changes outside of the MDS observation window are a significant issue. One commenter requested evidence that there is a widespread instance of misreporting therapy services. One commenter suggested that if this were such a major threat to the Medicare program, they would assume CMS would have involved the Recovery Audit Contractors (RACs), the Medicare Administrative Contractors (MACs), and CMS surveyors in the medical review process to address this issue.

Response: As we stated in the FY 2012 proposed rule (76 FR 26391), we have found some cases where therapy services recorded on a given PPS assessment did not provide an accurate account of the therapy provided to a given SNF resident outside the observation window for the most recent assessment. While in some of these cases, a patient's clinical status may have changed outside of the observation window requiring an adjustment to the intensity of therapy during that time, we have also been presented with a multitude of anecdotal evidence claiming the misreporting of therapy services. In addition, the Office of the Inspector General (OIG) of the Department of Health and Human Services conducted an independent study into questionable billing practices in SNFs. Report No: OEI–02–09–00204 (available online at *http://oig.hhs.gov/oei/reports/oei-02-09-00204.asp*) demonstrates that the OIG concurs with our statements in the FY 2012 proposed rule and supports the changes we have proposed to curb these practices. As cited in the OIG Report (page 11), ''Lastly, the data highlight the need for further changes to make RUGs and Medicare payments more consistent with beneficiaries' care and resource needs. These changes could include requiring SNFs to recalculate a beneficiary's RUG whenever his or her level of therapy changes substantially, as well as reducing the overlap that occurs in assessment periods.'' We agree with the commenter that we should utilize all of our available tools to identify and correct abusive practices. These issues have been referred to the appropriate entities for more intensive monitoring.

Comment: We received several comments supporting the addition of the COT OMRA. These commenters agreed that the COT OMRA would improve the accuracy of reimbursement for therapy services and quality of care to SNF patients. The commenters also believed that the implementation of the COT OMRA would help ensure that Medicare payments more accurately reflect the differences in resources utilized for patient care. However, many commenters stated that the COT OMRA would create an undue burden for facilities. Several commenters stated that the COT OMRA would increase supply costs associated with completing the actual form and that the additional paperwork required would affect the ''green'' efforts of many facilities. Some commenters stated that the additional assessments would reduce actual patient care due to the amount of time spent regulating and monitoring these assessments during the SNF stay. Some commenters expressed concern that the COT OMRA would require facilities to add new evaluation processes to monitor RTM. One commenter stated that the COT OMRA would increase confusion about the MDS process. One comment expressed concern that when the COT OMRA causes a resident to classify into a lower RUG category, this would cause facility workloads to

increase without an increase in personnel reimbursement.

Response: We would like to stress that SNFs would be required to complete a COT OMRA only if the intensity of therapy changes to such an extent that the patient's RUG classification, based on their last PPS assessment, is no longer an accurate representation of the patient's current clinical condition. Regarding the need for a new evaluation process to monitor and count RTM, we believe that facilities currently have processes in place that monitor the total amount of therapy minutes provided over any given period of time. Therefore, we do not agree that the process of evaluating RTM will add a significant time burden to facilities or reduce actual patient care. We would like to stress that if facilities tailor treatment time to the needs of each individual patient and continue to provide that therapy outside of the assessment window, facilities will be less likely to be required to complete as many COT OMRAs.

We cannot assess the accuracy of the statement that the COT OMRA will increase supply costs for form completion and affect the green efforts of facilities, as it depends on the facility management and environmental efforts of each specific facility. Nevertheless, we believe the COT OMRA is an appropriate measure to enhance the accuracy of payments and patient care. As we stated in the proposed rule (76 FR 26392), we believe the COT OMRA will allow us to track changes in the patient's condition and in the provision of therapy services more accurately, allowing reimbursement to reflect resource use more accurately, thereby improving the accuracy of reimbursement. Also, we believe that the ability to track changes in the patient's condition and in the provision of service more accurately will enhance a SNF's ability to provide quality care to residents.

We do not believe that the COT OMRA will increase confusion about the MDS process. As we have done in the past, we will update the RAI Manual to incorporate the changes and instructions for assessments and we will provide training opportunities prior to the October 1, 2011 implementation. Finally, we do not agree with the commenter who stated that when a COT OMRA causes a resident to classify into a lower RUG category, this will cause facility workload to increase without an increase in personnel reimbursement. We note that RUG–IV classification is based on resource utilization and cost. If a patient is classified into a lower therapy RUG category based on a change to the therapy delivered during the COT observation period, then the SNF would appropriately be paid the lower rate associated with that RUG category. The SNF PPS rates are designed to cover the costs of providing care, including related administrative costs.

Comment: Several commenters have asked whether the COT OMRA should be completed in cases of an increase in RTM to classify a resident into a higher RUG category in addition to cases where the resident would be classified into a lower RUG category based on the provision of RTM in the COT look-back period. One commenter asked if a COT OMRA would be required if there were a scheduled decrease in therapy provision (such as one that was caused by the discontinuation of one therapy discipline) or if the COT OMRA would be required for any reason that would cause a decrease in therapy. Additionally, commenters have questioned whether a resident's ADL score should be taken into account when determining whether a COT OMRA is required. One commenter asked whether COT OMRA requirements, including the COT observation period requirement, would apply if a resident was receiving therapy but was classified into a nursing RUG because of index maximization.

Response: As we stated in the FY 2012 proposed rule (76 FR 26392), a COT OMRA would be completed for a patient in a therapy RUG, if a patient's RTM has changed during the COT observation period to such a degree that the patient's current RUG classification, based on their last PPS assessment, is no longer an accurate representation of the patient's clinical condition (and the patient should be placed in a different RUG category). This applies whether the change in RTM is a scheduled change or an unscheduled or unplanned change, and whether the different RUG category is higher or lower than the RUG category in which the resident is currently placed. In addition, in response to the comment regarding whether other therapy changes such as the discontinuation of a particular therapy discipline would be sufficient to require a COT OMRA, upon further consideration, we believe that a COT OMRA should be required in any case where there is a change in the provision of therapy such that the patient's current RUG classification based on their last PPS assessment, is no longer an accurate representation of the patient's clinical condition and the patient should be placed in a different RUG–IV category. As we stated in the proposed rule (76 FR 26392) and in this final rule above, the purpose of the COT OMRA is to track changes in a patient's condition and in the provision of therapy services more accurately to ensure that the patient is placed in the appropriate RUG category, thereby improving the accuracy of reimbursement. Based on comments received in response to the proposed rule, we will require that the COT OMRA be completed where the provision of therapy services has changed in any manner as observed during the COT observation period such that the patient should be placed in a different RUG category (not just in cases where the RTM has changed). Therefore, if a therapy discipline is discontinued and this results in a patient no longer meeting the required number of therapy disciplines for the patient's current RUG category then a COT OMRA would be required. In addition, if a patient fails to receive the requisite number of days of therapy required for classification into the RUG category, then a COT OMRA would be required to change the patients' RUG category as appropriate. As discussed previously, the purpose of the COT OMRA is to ensure that the patient is placed in the appropriate therapy RUG category based on therapy services needed and received and to ensure more accurate payment. For example, a facility is evaluating whether a COT OMRA is required for a resident who was placed in a Very-High Rehabilitation RUG group after the last PPS assessment. Upon informal evaluation at the end of the COT observation period, the facility determines that the resident has had 720 minutes of therapy during the COT look-back period and meets all of the other criteria for classification in an Ultra-High Rehabilitation RUG group. A COT OMRA would be completed to place that resident into an Ultra High Rehabilitation RUG group. In response to the commenter's question regarding whether a resident's ADL score should be taken into account when determining whether a COT OMRA is required, ADL scores are not considered when deciding whether a COT OMRA needs to be completed as they are a refined grouping within the RUG category. However, when the COT OMRA is completed, the ADL score will be used in determining the appropriate RUG group in the grouper.

Additionally, one commenter asked whether a SNF would be required to comply with the COT OMRA requirements, including the COT observation period requirement, in cases where a resident is receiving therapy but is classified into a nursing RUG because of index maximization. Upon

consideration of this comment, we believe that the COT OMRA requirements, including the COT observation period requirement, should also apply in cases where a resident is receiving therapy but is classified into a nursing RUG because of index maximization. While this type of index maximization will affect only a small subset of beneficiaries receiving therapy, because such patients are receiving therapy services sufficient for classification into a therapy RUG and would be classified into a therapy RUG if index maximization had not been applied, we believe that it is appropriate to apply the COT OMRA policy as finalized in this rule to these patients as well, so that any changes in the intensity of therapy services delivered to the patient may be captured. For example, the evaluation performed at the end of the COT observation period for such a patient may indicate an increase in RTM delivered, which may necessitate placing the patient into a rehabilitation RUG category. Therefore, the COT OMRA policy, as finalized in this rule, will also apply to patients who are receiving a level of therapy sufficient for classification into a therapy RUG category, but are classified into a nursing RUG because of index maximization.

Comment: Many comments requested clarification about the COT OMRA. Specifically, several commenters asked whether the COT OMRA could replace or be combined with other scheduled PPS assessments. Also, one commenter asked us to clarify whether, if the ARD for the COT OMRA were not set for Day 7, a missed or late assessment penalty would be applied.

Response: As specified in Chapter 6, Section 30.3 of the Medicare Claims Processing Manual (CMS Pub. 100–04, which is available online at *http://www.cms.gov/manuals/downloads/clm104c06.pdf*), special billing requirements apply when there are multiple assessments within one Medicare-required assessment window. Consistent with our current policy, if an unscheduled PPS assessment (OMRA, Significant Change in Status Assessment (SCSA), or Significant Correction of a Prior Assessment (SCPA)) is required while in the assessment window of a scheduled PPS assessment that has not yet been completed, then facilities must combine the scheduled and unscheduled assessments by setting the ARD of the scheduled assessment for the same day that the unscheduled assessment is required. In such cases, facilities should provide the proper response to A0310 items to indicate which assessments are being combined, as completion of the combined assessment will be taken to fulfill the requirements for both the scheduled and unscheduled assessments. The purpose of this policy is to minimize the number of assessments required for SNF PPS payment purposes and to ensure that the assessments used for payment provide the most accurate picture of the patient's clinical condition and service needs. In practice, in cases where the COT OMRA is combined with a regularly scheduled assessment, the facility would complete the scheduled assessment, rather than the COT OMRA, since the COT OMRA only includes a subset of the required MDS data. This single full MDS assessment is then used to determine payment for both the COT OMRA observation period and the regular payment window for the scheduled assessment. Thus, for example, in cases where Day 7 of the COT observation period falls within the ARD window of the 30-day PPS assessment, a provider would set the ARD for the 30-day assessment on day 7 of the COT OMRA observation period, and code the reasons for assessment as both the 30-day and the COT OMRA assessment (MDS items A0310(B) and A0310(C)). Consistent with the COT OMRA policy we proposed in the FY 2012 proposed rule (76 FR 26392), the HIPPS code derived from the combined COT OMRA and scheduled PPS assessment would be effective starting the first day of the COT observation period (for example, for the first COT observation period after the previous assessment used for Medicare payment, the first day of the COT observation period is the day after the ARD of the previous assessment used for Medicare payment) and would remain in effect until the end of the payment window for the 30-day assessment (that is, day 60) or until a new unscheduled assessment (an OMRA, SCSA, or SCPA) is completed.

The ARD for the COT OMRA is Day 7 following the last scheduled or unscheduled PPS assessment or Day 7 following the end of the last COT observation period (in cases where therapy had not changed sufficiently to require a COT OMRA assessment to be performed for the previous COT observation period). If a COT OMRA is required but is completed late, the facility is still required to submit the late COT OMRA to CMS. The facility will be paid at the default rate for any days not in compliance with the ARD requirement. The ARD of the late COT OMRA restarts the 7-day review period for the next COT OMRA. Since SNFs are only permitted to bill after the appropriate assessment has been accepted into the CMS data base, failure to submit a required assessment while continuing to bill for services that would be covered by the assessment, would subject the claim to denial.

Comment: Many commenters offered suggestions and alternatives to the COT OMRA. Several commenters offered the general suggestion that CMS should seek alternate, less burdensome options to address the issue of therapy service level changes outside of the MDS observation windows. More specifically, commenters recommended that if we move forward with this proposal, we should allow flexibility in the choice of the ARD of the COT OMRA. One commenter suggested that we do this by allowing for grace days either at the beginning or end of the 7-day window for the COT observation period. Similarly, one commenter suggested that we incorporate the concept of ''grace minutes'' to offer facilities the flexibility to allow for an unexpected decrease in therapy minutes outside of the assessment window. Additionally, we received suggestions that the COT OMRA should be required only after the first 30 days of a patient's SNF stay.

Response: We appreciate the suggestions and alternatives offered. However, we believe that allowing flexibility in the choice of ARD by adding grace days and by allowing grace minutes, as suggested by the commenter, would defeat the purpose and intent of the COT OMRA, which is to determine whether the therapy provided during a successive 7-day window of therapy following the ARD of a scheduled or unscheduled PPS assessment (the COT observation period) corresponds to the resident's RUG–IV classification as reflected on the most recent PPS assessment. Adding grace days would allow facilities to provide a count of therapy minutes that may not be an accurate reflection of the actual therapy minutes provided during the successive 7-day period discussed above, contrary to the intent of the COT OMRA. Furthermore, we believe that allowing grace minutes would allow the facility to provide less therapy than anticipated with the expectation that CMS will reimburse the facility at a higher rate than appropriate. Additionally, the concept of ''grace minutes'' would indicate that providers are targeting a minimum threshold of minutes to qualify for a specific RUG category. We stress that there are not ''minimum minutes'' that should be met when determining how much therapy a resident will receive. We expect that facilities are determining the therapy minutes provided based on the needs of

each individual resident. Furthermore, we do not agree that we should require the COT OMRA only after the first 30 days of the SNF stay; instead, accurate payment should occur throughout the SNF stay. The majority of Medicare A Part stays are an average of 30 days in length, and thus, a COT OMRA that was only completed after day 30 would not adequately monitor for changes in therapy services during the Medicare Part A stay, which is the purpose of the COT OMRA.

Comment: Several commenters stated that the implementation of the COT OMRA implies that SNF payment is no longer prospective in nature. One commenter suggested that the retrospective nature of the COT OMRA undermines the principles of risk sharing inherent in a prospective payment system. One commenter suggested that rather than changing the nature of the PPS, we should modify the case-mix indexes (CMIs) and payment rates associated with the Rehabilitation RUG categories.

Response: As noted previously, we believe that the SNF PPS payments should reflect, as accurately as possible, resource utilization and cost. Classification of patients into therapy RUGs and payment for therapy services have always been based on the therapy services provided and reported on the MDS, and we do not view the COT OMRA as changing this. In implementing the COT OMRA, we are attempting to ensure that the therapy reported on the MDS and the therapy regimen chosen for the patient are a better reflection of the therapy needs of the patient, thereby ensuring more accurate payment. We appreciate the suggestion regarding modifying the CMIs and payment rates associated with the Rehabilitation RUG categories, and may consider this in the future to the extent appropriate. As stated in the proposed rule, CMS is considering a number of possible future initiatives that may help to ensure the long-term stability of the SNF PPS and further improve the accuracy of the rate-setting process. A discussion of these possible future initiatives is included in section III.E.5 below.

Comment: Several commenters raised concerns regarding the inability of the COT OMRA to account for the natural progression in a patient's therapy regimen. One commenter stated that as patients approach the end of their skilled therapy program, it is common practice to taper therapy down to prepare for discharge. Another commenter alleged that the requirement for the ARD of the COT OMRA to be set on Day 7 is arbitrary and that during any given payment period, clinical changes occur daily, especially at the beginning and end of the SNF stay. Other commenters were concerned that adhering to a strict 7-day evaluation schedule could prompt a patient's RUG category to change for as little as one lost minute of therapy.

Response: We believe that the COT OMRA, while based on changes in a therapy regimen, is primarily intended to capture the patient's appropriate RUG classification and, therefore, the payment level. Therapists should exercise their professional discretion with regard to the appropriate amount and modality of the therapy provided to a resident during a given SNF stay. We acknowledge the natural progression of a patient's therapy needs throughout a stay, and do not believe that the COT OMRA precludes therapists from having the freedom to tailor their provision of therapy services to the individual patient.

We do not agree that setting the ARD of the COT OMRA on Day 7 following the last PPS assessment or Day 7 of any succeeding COT observation period is arbitrary. The resident is placed in a Rehabilitation or Rehabilitation Plus Extensive Services RUG category partially based the amount of therapy that was received during a 7-day look-back period. One of the basic principles underlying the SNF PPS is that an assessment completed in one time period can be used in accurately calculating reimbursement for a future period. While we realize that there will be changes based on individual needs, it is expected that, on average, residents will receive approximately the same amount of therapy within the next 7-day period after a PPS assessment. The COT OMRA is an instrument that will better align payment with the amount of therapy that a resident actually needs and receives. Our analysis of therapy utilization across Medicare Part A stays indicates that patients tend to remain in the same therapy groups for the first 30 days of care; that is, as reported on the 5-day and 14-day assessments. Since the average length of stay is approximately 30 days, facilities that maintain a stable therapy schedule should not see a large volume of COT OMRAs. While it is more common to see changes in therapy and RUG–IV groups during longer stays, the volume of patients receiving Medicare Part A SNF care for stays exceeding 30 days is much lower.

In response to the comment that a strict 7-day evaluation schedule could prompt a patient's RUG category to change for as little as one lost minute of therapy, this is theoretically possible if the plan of care is designed to provide only the minimum number of minutes that qualify the patient for a specific therapy category. As noted above, the purpose of the COT OMRA is to determine whether the therapy provided during the 7 days of therapy following the ARD of a scheduled or unscheduled PPS assessment (and any succeeding COT observation period) correspond to the resident's RUG–IV classification, as reflected on the most recent PPS assessment. Slight variations during the 7-day period are expected, and it is up to the therapist to ensure that the patient receives the amount of therapy appropriate to his/her condition.

Accordingly, for the reasons discussed in this final rule and in the FY 2012 proposed rule (76 FR 26388 through 26393), we are finalizing our proposed policies related to the MDS Assessment Schedule, the EOT–OMRA, the EOT–R OMRA, and the COT OMRA. Specifically, effective October 1, 2011, as discussed in the proposed rule and in the final rule above, we are revising the Medicare-required assessment schedule in the manner set forth in Table 10B of the proposed rule (76 FR 26389); removing the distinction between 5-day and 7-day facilities for purposes of setting the ARD for the EOT OMRA, and requiring all facilities to set the ARD for the EOT ORMA by the third consecutive calendar day after a patient's therapy services have been discontinued (76 FR 26390); and permitting providers the option to complete an EOT–R OMRA rather than the optional SOT OMRA, in cases where the therapy resumption date is no more than 5 consecutive calendar days following the last day of therapy provided, and therapy services have resumed at the same RUG–IV classification level that had been in effect prior to the EOT OMRA (76 FR 26390 through 26391). In addition, effective October 1, 2011, we are requiring facilities to complete a COT OMRA for patients classified into a RUG–IV therapy category, whenever the intensity of therapy (that is, the total RTM delivered or other therapy category qualifiers, such as the number of days the patient received therapy during the week or the number of therapy disciplines) changes to such a degree that it would no longer reflect the RUG–IV classification and payment assigned for a given SNF resident based on the most recent assessment used for Medicare payment (as proposed, the need for a COT OMRA will be based on therapy services delivered during the COT observation period) (76 FR 26391 through 26393). In addition, as proposed, the new RUG–IV group resulting from the COT OMRA would be

billed starting the first day of the COT observation period for which the COT OMRA was completed, and would remain at this level until a new assessment is completed which changes the patient's RUG–IV classification. Finally, as discussed above, the COT OMRA policy, as finalized in this rule, will also apply to patients who are receiving a level of therapy sufficient for classification into a therapy RUG, but are classified into a nursing RUG because of index maximization.

5. Discussion of Possible Future Initiatives

In the FY 2012 proposed rule (76 FR 26393), we discussed some possible future initiatives that may help to ensure the long-term stability of the SNF PPS and further improve the accuracy of the rate-setting process. Specifically, we discussed three possible future initiatives. First, we discussed the possibility of evolving the manner in which we pay for therapy services toward a model that has previously been advocated by MedPAC, which would base payments for therapy services on the patient's characteristics. Similarly, we discussed the possibility of making partial prospective payments for therapy services, based on patient characteristics, and then reconciling payments after the services have been verified. Lastly, we discussed the possibility of annual recalibrations of the CMIs to account for fluctuations in provider practices, and MedPAC's analysis regarding the possibility of rebasing the system. As we stated in the FY 2012 proposed rule, we were not proposing any new Medicare policy in this discussion, as we recognized that depending on how such modifications are ultimately formulated, their implementation may require new statutory authority.

The comments we received related to this discussion, along with our responses, appear below.

Comment: We received a few general comments related to this discussion, the majority of which stated their support for working with CMS in the future on any future initiatives. We did not receive any comments about any specific initiatives discussed.

Response: We appreciate the support we received from commenters for considering these future initiatives and will continue to work with stakeholders on developing policies and programs that we consider necessary and appropriate to improve the SNF PPS.

F. The Skilled Nursing Facility Market Basket Index

Section 1888(e)(5)(A) of the Act requires us to establish a SNF market basket index (input price index), that reflects changes over time in the prices of an appropriate mix of goods and services included in the SNF PPS. In the FY 2012 proposed rule, we stated that the proposed rule incorporates the latest available projections of the SNF market basket. In this final rule, we are updating projections based on the latest available projections of the SNF market basket index at the time of publication. Accordingly, we have developed a SNF market basket index that encompasses the most commonly used cost categories for SNF routine services, ancillary services, and capital-related expenses.

Each year, we calculate a revised labor-related share based on the relative importance of labor-related cost categories in the input price index. Table 9 summarizes the updated labor-related share for FY 2012.

TABLE 9—LABOR-RELATED RELATIVE IMPORTANCE, FY 2011 AND FY 2012

	Relative importance, labor-related, FY 2011 10:2 forecast *	Relative importance, labor-related, FY 2012 11:2 forecast **
Wages and salaries	50.654	50.129
Employee benefits	11.511	11.502
Nonmedical professional fees	1.32	1.31
Labor-intensive services	3.427	3.394
Capital-related (.391)	2.399	2.358
Total	69.311	68.693

* Published in **Federal Register**; based on second quarter 2010 IHS Global Insight Inc. forecast.
** Based on the second quarter 2011 IHS Global Insight forecast, with historical data through the first quarter 2011.

1. Use of the Skilled Nursing Facility Market Basket Percentage

Section 1888(e)(5)(B) of the Act defines the SNF market basket percentage as the percentage change in the SNF market basket index from the average of the previous FY to the average of the current FY. For the Federal rates established in this final rule, we use the percentage increase in the SNF market basket index to compute the update factor for FY 2012. This is based on the IGI (formerly DRI–WEFA) second quarter 2011 forecast (with historical data through the first quarter 2011) of the FY 2012 percentage increase in the FY 2004-based SNF market basket index for routine, ancillary, and capital-related expenses, which is used to compute the update factor in this final rule. As discussed in section III.F.3 of this final rule, this market basket percentage change is reduced by the MFP adjustment as required by section 1888(e)(5)(B)(ii) of the Act. Finally, as discussed in section I.A of this final rule, we no longer compute update factors to adjust a facility-specific portion of the SNF PPS rates, because the initial three-phase transition period from facility-specific to full Federal rates that started with cost reporting periods beginning in July 1998 has expired.

2. Market Basket Forecast Error Adjustment

As discussed in the June 10, 2003, supplemental proposed rule (68 FR 34768) and finalized in the August 4, 2003, final rule (68 FR 46057 through 46059), the regulations at § 413.337(d)(2) provide for an adjustment to account for market basket forecast error. The initial adjustment applied to the update of the FY 2003 rate for FY 2004, and took into account the cumulative forecast error for the period from FY 2000 through FY 2002, resulting in an increase of 3.26 percent. Subsequent adjustments in succeeding FYs take into account the forecast error from the most recently available FY for which there is final data, and apply whenever the difference between the forecasted and actual change in the market basket exceeds a specified threshold. We originally used a 0.25 percentage point threshold for this purpose; however, for the reasons

specified in the FY 2008 SNF PPS final rule (72 FR 43425, August 3, 2007), we adopted a 0.5 percentage point threshold effective with FY 2008. As discussed previously in section I.G.2 of this final rule, as the difference between the estimated and actual amounts of increase in the market basket index for FY 2010 (the most recently available FY for which there is final data) does not exceed the 0.5 percentage point threshold, the payment rates for FY 2012 do not include a forecast error adjustment.

Comment: Several commenters suggested that CMS apply a cumulative forecast error adjustment to account for all of the variations in the market basket forecasts since FY 2004. These commenters stated that while the industry has accepted the adjustment process, the lack of any cumulative adjustment in recent years violates the precedent set by CMS in 2003 when the last cumulative adjustment was made and that the cumulative adjustment in 2003 demonstrated recognition by CMS of the cumulatively erosive effect of multi-year forecasting errors. The commenters recommended that CMS adopt a policy which recognizes the cumulative effect of multi-year market basket forecast errors and that adjustment be made to account for the cumulative errors, estimated at 0.7 percent, thus far.

Response: For FY 2004, we applied a one-time, cumulative forecast error correction of 3.26 percent (68 FR 46036, 46058). Since that time, the forecast errors have been relatively small and clustered near zero. As we stated in the FY 2004 final rule, we believe the forecast error correction should be applied only when the degree of forecast error in any given year is such that the SNF base payment rate does not adequately reflect the historical price changes faced by SNFs. Accordingly, we continue to believe that the forecast error adjustment mechanism should appropriately be reserved for the type of major, unexpected change that initially gave rise to this policy, rather than the minor variances that are a routine and inherent aspect of this type of statistical measurement. Further, we note that all of the Medicare prospective systems use an annual market basket adjustment factor to update rates to reflect inflation in the prices of goods and services used by providers.

3. Multifactor Productivity Adjustment

Section 3401(b) of the Affordable Care Act requires that, in FY 2012 (and in subsequent FYs), the market basket percentage under the SNF payment system as described in section 1888(e)(5)(B)(i) is to be reduced annually by the productivity adjustment described in section 1886(b)(3)(B)(xi)(II) of the Act. As explained in the Senate Finance Committee report that accompanied S. 1796 (''America's Healthy Future Act of 2009,'' the Senate's initial version of the health care reform legislation), the purpose of this type of productivity adjustment is to help ensure that the market basket update, in accounting for changes in the costs of goods and services used to provide patient care, also reflects ''* * * increases in provider productivity that could reduce the actual cost of providing services (such as through new technology, fewer inputs, *etc.*)'' (S. Rep. No. 111–89 at 261). Specifically, section 3401(a) of the Affordable Care Act amends section 1886(b)(3)(B) of the Act to add clause (xi)(II), which sets forth the definition of this productivity adjustment. The statute defines the productivity adjustment to be equal to the 10-year moving average of changes in annual economy-wide private nonfarm business multi-factor productivity (MFP) (as projected by the Secretary for the 10-year period ending with the applicable fiscal year, year, cost reporting period, or other annual period) (the ''MFP adjustment''). The Bureau of Labor Statistics (BLS) is the agency that publishes the official measure of private nonfarm business MFP. Please see *http://www.bls.gov/mfp* to obtain the BLS historical published MFP data. The projection of MFP is currently produced by IGI, an economic forecasting firm. To generate a forecast of MFP, IGI replicated the MFP measure calculated by the BLS, using a series of proxy variables derived from IGI's U.S. macroeconomic models. These models take into account a very broad range of factors that influence the total U.S. economy. IGI forecasts the underlying proxy components, such as Gross Domestic Product (GDP), capital, and labor inputs required to estimate MFP, and then combines those projections according to the BLS methodology. In Table 10, we identify each of the major MFP component series employed by the BLS to measure MFP. We also provide the corresponding concepts forecasted by IGI and determined to be the best available proxies for the BLS series.

TABLE 10—MULTIFACTOR PRODUCTIVITY COMPONENT SERIES EMPLOYED BY THE BUREAU OF LABOR STATISTICS AND IHS GLOBAL INSIGHT

BLS series	IGI series
Real value-added output, constant 2005 dollars	Non-housing non-government non-farm real GDP, Billions of chained 2005 dollars—annual rate.
Private non-farm business sector labor input; 2005 = 100.00	Hours of all persons in private nonfarm establishments, 2005 = 100.00, adjusted for labor composition effects.
Aggregate capital inputs; 2005 = 100.00	Real effective capital stock used for full employment GDP, Billions of chained 2005 dollars.

IGI found that the historical growth rates of the BLS components used to calculate MFP and the IGI components identified are consistent across all series and, therefore, suitable proxies for calculating MFP. We have included below a more detailed description of the methodology used by IGI to construct a forecast of MFP, which is aligned closely with the methodology employed by the BLS. For more information regarding the BLS method for estimating productivity, please see the following link: *http://www.bls.gov/mfp/mprtech.pdf*.

At the time of this final rule, the BLS has published a historical time series of private nonfarm business MFP for 1987 through 2010, with 2010 being a preliminary value. Using this historical MFP series and the IGI forecasted series, IGI developed a forecast of MFP for 2011 through 2021, as described below.

To create a forecast of BLS' MFP index, the forecasted annual growth rates of the ''non-housing, nongovernment, non-farm, real GDP,'' ''hours of all persons in private nonfarm establishments adjusted for labor composition,'' and ''real effective capital stock'' series (ranging from 2011 to 2021) are used to ''grow'' the levels of the ''real value-added output,'' ''private non-farm business sector labor input,''

and ''aggregate capital input'' series published by the BLS. Projections of the ''hours of all persons'' measure are calculated using the difference between the projected growth rates of real output per hour and real GDP. This difference is then adjusted to account for changes in labor composition in the forecast interval. Using these three key concepts, MFP is derived by subtracting the contribution of labor and capital inputs from output growth. However, to estimate MFP, we need to understand the relative contributions of labor and capital to total output growth. Therefore, two additional measures are needed to operationalize the estimation of the IGI MFP projection: Labor compensation and capital income. The sum of labor compensation and capital income represents total income. The BLS calculates labor compensation and capital income (in current dollar terms) to derive the nominal values of labor and capital inputs. IGI uses the ''nongovernment total compensation'' and ''flow of capital services from the total private non-residential capital stock'' series as proxies for the BLS's income measures. These two proxy measures for income are divided by total income to obtain the shares of labor compensation and capital income to total income. To estimate labor's contribution and capital's contribution to the growth in total output, the growth rates of the proxy variables for labor and capital inputs are multiplied by their respective shares of total income. These contributions of labor and capital to output growth are subtracted from total output growth to calculate the ''change in the growth rates of multifactor productivity'' using the following formula:

*MFP = Total output growth − ; ((labor input growth*labor compensation share) + (capital input growth * capital income share))*

The change in the growth rates (also referred to as the compound growth rates) of the IGI MFP are multiplied by 100 to calculate the percent change in growth rates (the percent change in growth rates is published by the BLS for its historical MFP measure). Finally, the growth rates of the IGI MFP are converted to index levels based to 2005 to be consistent with the BLS' methodology. For benchmarking purposes, the historical growth rates of IGI's proxy variables were used to estimate a historical measure of MFP, which was compared to the historical MFP estimate published by the BLS. The comparison revealed that the growth rates of the components were consistent across all series and, therefore, validated the use of the proxy variables in generating the IGI MFP projections. The resulting MFP index was then interpolated to a quarterly frequency using the Bassie method for temporal disaggregation. The Bassie technique utilizes an indicator (pattern) series for its calculations. IGI uses the index of output per hour (published by the BLS) as an indicator when interpolating the MFP index.

a. Incorporating the Multifactor Productivity Adjustment Into the Market Basket Update

According to section 1888(e)(5)(A) of the Act, the Secretary ''shall establish a skilled nursing facility market basket index that reflects changes over time in the prices of an appropriate mix of goods and services included in covered skilled nursing facility services.'' As described in section I.G.2 of this final rule, we estimate the SNF PPS market basket percentage for FY 2012 under section 1888(e)(5)(B)(i) of the Act based on the FY 2004-based SNF market basket. Section 3401(b) of the Affordable Care Act amends section 1888(e)(5)(B) of the Act, in part, by adding a new clause (ii), which requires that for FY 2012 and each subsequent FY, after determining the market basket percentage described in section 1888(e)(5)(B)(i) of the Act, ''the Secretary shall reduce such percentage by the productivity adjustment described in section 1886(b)(3)(B)(xi)(II)'' (which we refer to as the MFP adjustment). Section 1888(e)(5)(B)(ii) of the Act further states that the reduction of the market basket percentage by the MFP adjustment may result in the market basket percentage being less than zero for a FY, and may result in payment rates under section 1888(e) of the Act for a FY being less than such payment rates for the preceding FY. Thus, if the application of the MFP adjustment to the market basket percentage calculated under section 1888(e)(5)(B)(i) results in an MFP-adjusted market basket percentage that is less than zero, then the annual update to the unadjusted Federal per diem rates under section 1888(e)(4)(E)(ii) would be negative, and such rates would decrease relative to the prior FY.

We received the following comment on the incorporation of the MFP adjustment into the SNF market basket which, along with our response, appears below.

Comment: One commenter proposed to remove the statutory language requiring a multi-factor productivity adjustment to the SNF market basket increase and recommended an alternative approach to measuring productivity. The commenter recommended that CMS achieve productivity gains by implementing a mechanism that recognizes that the average length of stay in SNFs can be reduced, potentially resulting in aggregate savings.

Response: The commenter's proposal would require a change to the existing statute governing the SNF PPS and, therefore, the request is outside the scope of rulemaking. As stated previously, section 3401(b) of the Affordable Care Act requires that, in FY 2012 (and in subsequent FYs), the market basket percentage under the SNF payment system as described in section 1888(e)(5)(B)(i) of the Act is to be reduced annually by the productivity adjustment described in section 1886(b)(3)(B)(xi)(II) of the Act.

Accordingly, we are finalizing the methodology for calculating the MFP adjustment, and the incorporation of the MFP adjustment into the SNF market basket as discussed in this section of the final rule, and in section VI.C of the FY 2012 proposed rule (76 FR 26394 through 26396).

To calculate the MFP-adjusted update for the SNF PPS, we subtract the MFP percentage adjustment from the FY 2012 market basket percentage calculated using the FY 2004-based SNF market basket. In the FY 2012 proposed rule (76 FR 26395), we proposed that the end of the 10-year moving average of changes in the MFP would coincide with the end of the appropriate FY update period. Since the market basket percentage is reduced by the MFP adjustment to determine the annual update for the SNF PPS, we believe it is appropriate for the numbers associated with both components of the calculation (the market basket percentage and the productivity adjustment) to be projected as of the same end date so that changes in market conditions are aligned. Therefore, for the FY 2012 update, the MFP adjustment is calculated as the 10-year moving average of changes in MFP for the period ending September 30, 2012. We round the final annual adjustment to the one-tenth of one percentage point level up or down as applicable according to conventional rounding rules (that is, if the number we are rounding is followed by 5, 6, 7, 8, or 9, we round the number up; if the number we are rounding is followed by 0, 1, 2, 3, or 4, we round the number down).

In accordance with section 1888(e)(5)(B)(i) of the Act, the market basket percentage for FY 2012 for the SNF PPS is based on the 2nd quarter 2011 forecast of the FY 2004-based SNF

market basket update, which is estimated to be 2.7 percent. In accordance with section 1888(e)(5)(B)(ii) of the Act (as added by section 3401(b) of the Affordable Care Act), this market basket percentage is then reduced by the MFP adjustment (the 10-year moving average of changes in MFP for the period ending September 30, 2012) of 1.0 percent, which is calculated as described above and based on IGI's 2nd quarter 2011 forecast. The resulting MFP-adjusted market basket increase factor is equal to 1.7 percent, or 2.7 percent less 1.0 percentage points.

Furthermore, we proposed that in fiscal years where a forecast error adjustment is applicable, we would first apply the forecast error adjustment to the market basket percentage, before applying the MFP adjustment. As discussed previously, in determining whether a forecast error adjustment should be applied, CMS compares the forecasted market basket percentage computed under section 1888(e)(5)(B)(i) of the Act for the most recently available fiscal year for which there is final data to the actual market basket percentage for that fiscal year. Because the forecast error adjustment is intended to address errors in the forecast of the market basket percentage, we believe that this adjustment is part of the establishment of the appropriate market basket percentage under section 1888(e)(5)(B)(i) of the Act. Section 1888(e)(5)(B)(ii) of the Act (as added by section 3401(b) of the Affordable Care Act) requires the MFP adjustment to be applied ''after determining the percentage described in clause (i)''. Thus, we will apply the forecast error adjustment (when applicable) to the market basket percentage prior to applying the MFP adjustment, to determine the update to the unadjusted Federal per diem rates for a fiscal year.

As discussed in the FY 2012 proposed rule (76 FR 26396), we proposed to revise § 413.337 to reflect the policies discussed above and to conform the regulations to the corresponding statutory requirements at section 1888(e)(4)(E) of the Act. As we did not receive any comments on our proposed changes to § 413.337, we are finalizing these changes as proposed in the FY 2012 proposed rule, subject to the technical correction noted below. Accordingly, as we proposed in the FY 2012 proposed rule, we are revising § 413.337 by adding a new paragraph (d)(3) to require, for FY 2012 and each subsequent FY, that the market basket index percentage change (as modified by any applicable forecast error adjustment) be reduced by the MFP adjustment described in section 1886(b)(3)(B)(xi)(II) of the Act in determining the annual update of the unadjusted Federal per diem rates. Consistent with section 1888(e)(5)(B)(ii) of the Act (as added by section 3401(b) of the Affordable Care Act), as we proposed, we are further revising § 413.337(d)(3) to state that the reduction of the market basket index percentage change by the MFP adjustment may result in the market basket index percentage change being less than zero for a fiscal year, and may result in the unadjusted Federal payment rates for a fiscal year being less than such payment rates for the preceding fiscal year. We note that we have made a technical correction to the language we proposed for § 413.337(d)(3). In the last sentence, we are replacing the term ''market basket percentage change'' with ''market basket index percentage change'' to be consistent with the terminology used in the first sentence of § 413.337(d)(3) and in § 413.337(d)(1).

In addition, as we proposed, we are revising existing paragraphs (d)(1) and (d)(2) of § 413.337, as discussed below. First, we are revising § 413.337(d)(1) so that the text more accurately tracks the corresponding statutory requirements at section 1888(e)(4)(E) of the Act. As we stated in the FY 2012 proposed rule (76 FR 26396), currently, § 413.337(d)(1) does not reflect the amendments made to section 1888(e)(4)(E)(ii) by section 311 of the BIPA (see section I.D of this final rule). While we have always updated the unadjusted Federal per diem rates in accordance with the requirements set forth in section 1888(e)(4)(E)(ii) of the Act as amended by section 311 of the BIPA, we inadvertently failed to update the regulation text to conform with the BIPA requirements. Therefore, we are now revising § 413.337(d)(1) to conform with the current statutory language in section 1888(e)(4)(E) as amended by section 311 of the BIPA. Second, as we proposed, we are revising § 413.337(d)(2) to specify the existing thresholds we employ in determining whether a forecast error adjustment is applicable.

b. Federal Rate Update Factor

Section 1888(e)(4)(E)(ii)(IV) of the Act requires that the update factor used to establish the FY 2012 unadjusted Federal rates be at a level equal to the market basket percentage change. Accordingly, to establish the update factor, we determined the total growth from the average market basket level for the period of October 1, 2010 through September 30, 2011 to the average market basket level for the period of October 1, 2011 through September 30, 2012. Using this process, the market basket update factor for FY 2012 SNF PPS unadjusted Federal rates is 2.7 percent. As required by section 1888(e)(5)(B) of the Act, this market basket percentage is then reduced by the MFP adjustment (the 10-year moving average of changes in MFP for the period ending September 30, 2012) of 1.0 percent as described in section III.F.3. The resulting MFP-adjusted market basket increase factor is equal to 1.7 percent, or 2.7 percent less 1.0 percentage point. We used this MFP-adjusted market basket update factor to compute the SNF PPS rate shown in Tables 2 and 3.

G. Consolidated Billing

Section 4432(b) of the BBA established a consolidated billing requirement that places the Medicare billing responsibility for virtually all of the services that the SNF's residents receive with the SNF, except for a small number of services that the statute specifically identifies as being excluded from this provision. As noted previously in section I. of this final rule, subsequent legislation enacted a number of modifications in the consolidated billing provision.

Specifically, section 103 of the BBRA amended this provision by further excluding a number of individual ''high-cost, low probability'' services, identified by the Healthcare Common Procedure Coding System (HCPCS) codes, within several broader categories (chemotherapy and its administration, radioisotope services, and customized prosthetic devices) that otherwise remained subject to the provision. We discuss this BBRA amendment in greater detail in the proposed and final rules for FY 2001 (65 FR 19231 through 19232, April 10, 2000, and 65 FR 46790 through 46795, July 31, 2000), as well as in Program Memorandum AB–00–18 (Change Request #1070), issued March 2000, which is available online at *http://www.cms.hhs.gov/transmittals/downloads/ab001860.pdf.*

Section 313 of the BIPA further amended this provision by repealing its Part B aspect; that is, its applicability to services furnished to a resident during a SNF stay that Medicare Part A does not cover. (However, physical, occupational, and speech-language therapy remain subject to consolidated billing, regardless of whether the resident who receives these services is in a covered Part A stay.) We discuss this BIPA amendment in greater detail in the proposed and final rules for FY 2002 (66 FR 24020 through 24021, May

10, 2001, and 66 FR 39587 through 39588, July 31, 2001).

In addition, section 410 of the MMA amended this provision by excluding certain practitioner and other services furnished to SNF residents by RHCs and FQHCs. We discuss this MMA amendment in greater detail in the update notice for FY 2005 (69 FR 45818–45819, July 30, 2004), as well as in Medicare Learning Network (MLN) Matters article MM3575, issued December 10, 2004, which is available online at *http://www.cms.gov/MLNMattersArticles/downloads/MM3575.pdf.*

Further, while not substantively revising the consolidated billing requirement itself, a related provision was enacted in the Medicare Improvements for Patients and Providers Act of 2008 (MIPPA) (Pub. L. 110–275, enacted July 15, 2008). Specifically, section 149 of MIPPA amended section 1834(m)(4)(C)(ii) of the Act to create a new subclause (VII), which adds SNFs (as defined in section 1819(a) of the Act) to the list of entities that can serve as a telehealth ''originating site'' (that is, the location at which an eligible individual can receive, through the use of a telecommunications system, services furnished by a physician or other practitioner who is located elsewhere at a ''distant site'').

As explained in the Medicare Physician Fee Schedule (PFS) final rule for CY 2009 (73 FR 69726, 69879, November 19, 2008), a telehealth originating site receives a facility fee which is always separately payable under Part B outside of any other payment methodology. Section 149(b) of MIPPA amended section 1888(e)(2)(A)(ii) of the Act to exclude telehealth services furnished under section 1834(m)(4)(C)(ii)(VII) of the Act from the definition of ''covered skilled nursing facility services'' that are paid under the SNF PPS. Thus, a SNF ''* * * can receive separate payment for a telehealth originating site facility fee even in those instances where it also receives a bundled per diem payment under the SNF PPS for a resident's covered Part A stay'' (73 FR 69881). By contrast, under section 1834(m)(2)(A) of the Act, a telehealth distant site service is payable under Part B to an eligible physician or practitioner only to the same extent that it would have been so payable if furnished *without* the use of a telecommunications system. Thus, as explained in the CY 2009 PFS final rule, eligible distant site physicians or practitioners can receive payment for a telehealth service that they furnish

> * * * only if the service is separately payable under the PFS when furnished in a face-to-face encounter at that location. For example, we pay distant site physicians or practitioners for furnishing services via telehealth only if such services are not included in a bundled payment to the facility that serves as the originating site (73 FR 69880).

This means that in those situations where a SNF serves as the telehealth originating site, the distant site professional services would be separately payable under Part B only to the extent that they are not already included in the SNF PPS bundled per diem payment and subject to consolidated billing. Thus, for a type of practitioner whose services are not otherwise excluded from consolidated billing when furnished during a face-to-face encounter, the use of a telehealth distant site would not serve to unbundle those services. In fact, consolidated billing does exclude the professional services of physicians, along with those of most of the other types of telehealth practitioners that the law specifies at section 1842(b)(18)(C) of the Act, that is, physician assistants, nurse practitioners, clinical nurse specialists, certified registered nurse anesthetists, certified nurse midwives, and clinical psychologists (see section 1888(e)(2)(A)(ii) of the Act and § 411.15(p)(2)). However, the services of clinical social workers, registered dietitians and nutrition professionals remain subject to consolidated billing when furnished to a SNF's Part A resident and, thus, cannot qualify for separate Part B payment as telehealth distant site services in this situation. Additional information on this provision appears in Program Transmittal #1635 (Change Request #6215), issued November 14, 2008, which is available online at *http://www.cms.hhs.gov/transmittals/downloads/R1635CP.pdf.*

To date, the Congress has enacted no further legislation affecting the consolidated billing provision. However, as noted above and explained in the proposed rule for FY 2001 (65 FR 19232, April 10, 2000), the amendments enacted in section 103 of the BBRA not only identified for exclusion from this provision a number of particular service codes within four specified categories (that is, chemotherapy items, chemotherapy administration services, radioisotope services, and customized prosthetic devices), but also gave the Secretary ''* * * the authority to designate additional, individual services for exclusion within each of the specified service categories.'' In the proposed rule for FY 2001, we also noted that the BBRA Conference Report (H.R. Rep. No. 106–479 at 854 (1999) (Conf. Rep.)) characterizes the individual services that this legislation targets for exclusion as ''* * * high-cost, low probability events that could have devastating financial impacts because their costs far exceed the payment [SNFs] receive under the prospective payment system * * *''. According to the conferees, section 103(a) ''is an attempt to exclude from the PPS certain services and costly items that are provided infrequently in SNFs. For example * * * specific chemotherapy drugs * * * not typically administered in a SNF, or * * * requiring special staff expertise to administer * * *.'' By contrast, the remaining services within those four categories are not excluded (thus leaving all of those services subject to SNF consolidated billing), because they are relatively inexpensive and are furnished routinely in SNFs.

As we further explained in the final rule for FY 2001 (65 FR 46790, July 31, 2000), and as our longstanding policy, any additional service codes that we might designate for exclusion under our discretionary authority must meet the same statutory criteria used in identifying the original codes excluded from consolidated billing under section 103(a) of the BBRA: They must fall within one of the four service categories specified in the BBRA, and they also must meet the same standards of high cost and low probability in the SNF setting, as discussed in the BBRA Conference report. Accordingly, we characterized this statutory authority to identify additional service codes for exclusion ''* * * as essentially affording the flexibility to revise the list of excluded codes in response to changes of major significance that may occur over time (for example, the development of new medical technologies or other advances in the state of medical practice)'' (65 FR 46791). In the FY 2012 proposed rule, we specifically invited public comments identifying codes in any of these four service categories (chemotherapy items, chemotherapy administration services, radioisotope services, and customized prosthetic devices) representing recent medical advances that might meet our criteria for exclusion from SNF consolidated billing (76 FR 26397). The comments that we received on this subject, and our responses, appear below.

Comment: A review of the particular codes that commenters submitted in response to the proposed rule's solicitation for comment revealed that a significant number were identical to

codes that had already been submitted for consideration during the public comment period on the FY 2010 SNF PPS proposed rule or in earlier years, and which we had already decided previously not to exclude. These included items such as hyperbaric oxygen treatments, total parenteral nutrition, wound care devices, blood products, and ''chemotherapy'' drugs that are actually used in treating diseases other than cancer. Other codes that commenters submitted did fall within the particular service categories that the BBRA authorizes for exclusion; however, these were codes that were already in existence as of the BBRA's enactment, but did not fall within the specific statutory code ranges that the BBRA designated for exclusion. Examples would include customized prosthetic device codes L5010 (''partial foot, molded socket, ankle height, with toe filler''), L5020 (''partial foot, molded socket, tibial tubercle height, with toe filler''), and L5987 (''all lower extremity prosthesis, shank foot system with vertical loading pylon'').

Response: As discussed in the applicable prior final rules, we decline to add to the exclusion list those services submitted by commenters that have already been considered and not excluded in previous years based on their being outside the particular service categories that the statute authorizes for exclusion. These services include hyperbaric oxygen treatments as discussed previously in the SNF PPS final rules for FY 2001 (65 FR 46790–91, July 31, 2000), FY 2002 (66 FR 39588, July 31, 2001), FY 2004 (68 FR 46060–62, August 4, 2003), FY 2006 (70 FR 45048–50, August 4, 2005), FY 2008 (72 FR 43430–32, August 3, 2007), FY 2009 (73 FR 46435–37, August 8, 2008), and FY 2010 (74 FR 40353–56, August 11, 2009); total parenteral nutrition as discussed previously in the SNF PPS final rules for FY 2002, FY 2004, and FY 2006; and wound care devices as discussed previously in the SNF PPS final rules for FY 2004 and FY 2006. For the same reason—that is, being outside the particular service categories that the statute authorizes for exclusion—we decline to adopt the suggestion to exclude certain blood products, hemophilia clotting factor and intravenous infusion of immunoglobulin (IVIG). With respect to the reiteration of previous requests to exclude as chemotherapy drugs certain medications that are actually used to treat diseases other than cancer, we note that as indicated previously in the FY 2010 SNF PPS final rule (74 FR 40354, August 11, 2009), such medications do not fall within the scope of ''chemotherapy'' drugs for purposes of this exclusion. In addition, regarding those particular codes (such as the three L codes specified above) that were already in existence as of the BBRA's enactment, we explained previously in the FY 2010 SNF PPS final rule (74 FR 40354, August 11, 2009) that our position has always been that the BBRA's discretionary authority to exclude codes within certain designated service categories applies solely to codes that were created subsequent to the BBRA's enactment, and not to those codes that were already in existence as of July 1, 1999 (the date that the legislation itself uses as the reference point for identifying the codes that it designates for exclusion). As we explained in the FY 2010 final rule (74 FR 40354), this position reflects the assumption that if a particular code was already in existence as of that date but not designated for exclusion, this meant that it was intended to remain within the SNF PPS bundle, subject to the BBRA Conference Report's provision for a GAO review of the code set that was conducted the following year (H.R. Rep. No. 106–479 at 854 (1999) (Conf. Rep.)). Accordingly, we decline to add these codes to the exclusion list.

Comment: One commenter requested us to consider a particular chemotherapy drug, TREANDA® (HCPCS code J9033), that the commenter recommended as meeting the BBRA's ''high-cost, low probability'' criteria for exclusion.

Response: We note that in one respect, this drug would appear to be similar to the three L codes discussed in the preceding comment, in that it falls within one of the particular service categories (that is, chemotherapy items) that the BBRA authorizes for exclusion, but the excluded code ranges specified in the BBRA skip over the particular code number to which it was assigned. However, in contrast to those L codes, code J9033 was not in use at the time of the BBRA's enactment; in fact, this drug did not actually come into existence until almost a decade later. Accordingly, as there is no basis for assuming at the outset that this particular code's omission from the excluded ranges indicated an intent for it to remain bundled, it then becomes appropriate for us to consider the possibility of excluding the drug from consolidated billing. We have determined that this drug does, in fact, qualify for exclusion in that its cost is comparable to other excluded chemotherapy drugs and it is rarely administered to SNF inpatients. Thus, it meets the ''high-cost, low probability'' standard in the SNF setting, as discussed in the BBRA Conference Report. Accordingly, this new exclusion will appear in a forthcoming consolidated billing update, with an effective date of October 1, 2011.

Comment: Some commenters suggested that we consider the exclusion of PROVENGE® (Sipuleucel-T, HCPCS code Q2043), which is used in treating certain cases of metastatic prostate cancer. PROVENGE® is made by selectively removing leukocytes (white blood cells) from the patient's blood and sending them to a factory, which adds a protein commonly found in prostate cancer and an immune stimulating agent to the leukocytes. All three are mixed with lactated ringers and then sent back to the physician to administer to the patient. The commenters cited this drug as meeting the applicable standards for exclusion of high cost and low probability.

Response: We note that in accordance with the National Coverage Determination that was released on June 30, 2011 (available online at *http://www.cms.gov/medicare-coverage-database/details/nca-decision-memo.aspx?NCAId=247&fromdb=true*), PROVENGE® is not classified as a drug for purposes of this particular coverage, but rather, as a service that is furnished as an incident to the physician's professional services. As such, it remains subject to SNF consolidated billing, consistent with the longstanding policy that we first enunciated in the May 12, 1998 interim final rule (63 FR 26297):

> * * * while the SNF Consolidated Billing provision does not apply to the professional services that a physician or other exempt practitioner performs personally, it does apply to those services that are furnished to an SNF resident by someone other than the practitioner, as an incident to the practitioner's professional service. This position is consistent with the approach that has long been taken under the hospital bundling requirement, as well as with section 1888(e)(2)(A)(ii) of the Act, which specifically identifies ''physicians' services'' themselves as the service category that is excluded from SNF Consolidated Billing. Physicians' services, in turn, are covered by Part B under section 1861(s)(1) of the Act and are defined in section 1861(q) as being performed by a physician, while ''incident to'' services are covered under a separate statutory authority (section 1861(s)(2)(A) of the Act) and are, by definition, not performed by a physician * * * We believe that to do otherwise with regard to these ''incident to'' services would effectively create a loophole through which a potentially broad and diverse array of services could be unbundled, merely by virtue of being furnished under the general auspices of such practitioners. This, in turn, would ultimately defeat the very

purpose of the SNF Consolidated Billing provision—that is, to make the SNF itself responsible for billing Medicare for essentially all of its residents' services, other than those identified in a small number of narrow and specifically delimited exclusions. Further, as noted above, both the Consolidated Billing and SNF PPS provisions employ the same statutory list of excluded services. Thus, the approach we are adopting with regard to the limited range of services that qualify for exclusion is essential not only to safeguard the integrity of the Consolidated Billing requirement, but also that of the SNF PPS itself.

Comment: Some commenters reiterated previous suggestions on expanding the existing chemotherapy exclusion to encompass related drugs that are commonly administered in conjunction with chemotherapy to ameliorate the side effects of the chemotherapy drugs, such as anti-emetics (anti-nausea drugs).

Response: As we have noted previously in this final rule and in response to comments on this issue in the past (most recently, in the August 11, 2009 SNF PPS final rule for FY 2010 (74 FR 40354)), the BBRA authorizes us to identify additional service codes for exclusion only within those particular service categories—chemotherapy items; chemotherapy administration services; radioisotope services; and, customized prosthetic devices—that it has designated for this purpose, and does not give us the authority to exclude other services which, though they may be related, fall outside of the specified service categories themselves. Thus, while anti-emetics, for example, are commonly administered in conjunction with chemotherapy, they are not inherently chemotherapeutic in nature (that is, they are not themselves oncolytic drugs that actively destroy cancer cells) and, consequently, do not fall within the excluded chemotherapy category designated in the BBRA.

Comment: One commenter repeated calls from previous years to expand the existing exclusion for certain high-intensity outpatient hospital services to encompass services furnished in other, nonhospital settings, stating that such nonhospital services may be cheaper and more accessible in certain localities (such as rural settings) than those furnished by hospitals. In urging us to expand the administrative exclusion in this manner, the commenter also advanced the view that the test of service intensity under this exclusion was intended to be applied independently, regardless of whether the service in question is actually being furnished in the hospital setting.

Response: We have included in a number of previous rules an explanation of the setting-specific nature of the exclusion for certain high-intensity outpatient hospital services—most recently, in the FY 2010 SNF PPS final rule (74 FR 40355, August 11, 2009):

> We believe the comments that reflect previous suggestions for expanding this administrative exclusion to encompass services furnished in non-hospital settings indicate a continued misunderstanding of the underlying purpose of this provision. As we have consistently noted in response to comments on this issue in previous years * * * and as also explained in Medicare Learning Network (MLN) Matters article SE0432 (available online at *www.cms.hhs.gov/MLNMattersArticles/downloads/SE0432.pdf*), the rationale for establishing this exclusion was to address those types of services that are so far beyond the normal scope of SNF care that they require the intensity of the hospital setting in order to be furnished safely and effectively.
>
> Moreover, we note that when the Congress enacted the consolidated billing exclusion for certain RHC and FQHC services in section 410 of the MMA, the accompanying legislative history's description of present law acknowledged that the existing exclusions for exceptionally intensive outpatient services are specifically limited to ''* * * certain outpatient services from a Medicare-participating hospital or critical access hospital * * *'' (emphasis added). (See the House Ways and Means Committee Report (H. Rep. No. 108–178, Part 2 at 209), and the Conference Report (H. Conf. Rep. No. 108–391 at 641).) Therefore, these services are excluded from SNF consolidated billing only when furnished in the outpatient hospital or CAH setting, and not when furnished in other, freestanding (non-hospital or non-CAH) settings.

Further, the authority for us to establish a categorical exclusion for these services that would apply irrespective of the setting in which they are furnished does not exist in current law.

Finally, we do not agree with the commenter's analysis regarding the applicable standard for determining service intensity under this exclusion. Contrary to that commenter's statement, when we originally established the administrative exclusion for certain designated categories of high-intensity outpatient services, we did not envision creating a separate standard of service intensity that would exist independently from the service's performance in the hospital setting. In fact, the applicable discussion in the May 12, 1998 interim final rule (63 FR 26298) clearly indicates that this exclusion was created within the specific context of the concurrent development of a new PPS specifically for outpatient hospital services, reflecting the need ''* * * to delineate the respective areas of responsibility for the SNF under the Consolidated Billing provision, and for the *hospital* under the outpatient bundling provision, with regard to these services'' (emphasis added). This point was further reinforced in the subsequent SNF PPS final rule for FY 2000 (64 FR 41676, July 30, 1999), where we noted that

> * * * a key concern underlying the development of the consolidated billing exclusion of certain outpatient hospital services specifically involves the need to distinguish those services that comprise the SNF bundle from those that will become part of the outpatient hospital bundle that is currently being developed in connection with the outpatient hospital PPS. Accordingly, we are not extending the outpatient hospital exclusion from consolidated billing to encompass any other, freestanding settings.

Comment: One commenter noted that the administrative exclusion from consolidated billing for certain designated, highly intensive outpatient hospital services (such as emergency services) also serves to encompass an associated, medically necessary ambulance roundtrip from the SNF. The commenter requested clarification on whether this exclusion would still apply to an ambulance trip returning to the SNF following the receipt of emergency services, even though the emergency condition itself would have already been stabilized by that point.

Response: The return ambulance trip would still be excluded from consolidated billing in this scenario. As explained on page 3 of Medicare Learning Network (MLN) Matters Special Edition article #SE0433 (available online at *http://www.cms.gov/MLNMattersArticles/downloads/SE0433.pdf*),

> Since a beneficiary's departure from the SNF to receive one of these excluded types of outpatient hospital services is considered to end the beneficiary's status as an SNF resident for CB [consolidated billing] purposes with respect to those services, any associated ambulance trips are, themselves, excluded from CB as well. Therefore, an ambulance trip from the SNF to the hospital for the receipt of such services should be billed separately under Part B by the outside supplier. *Moreover, once the beneficiary's SNF resident status has ended in this situation, it does not resume until the point at which the beneficiary actually arrives back at the SNF; accordingly, the return ambulance trip from the hospital to the SNF would also be excluded from CB* (emphasis added).

Comment: One commenter requested that all chemotherapy drugs and customized prosthetic devices be excluded from consolidated billing, as well as transportation relating to the receipt of excluded radiation therapy services.

Response: As indicated previously in this final rule, in creating a statutory

carve-out for several designated types of services, the BBRA did not categorically exclude all such services from SNF consolidated billing. Instead, the legislation specifically identified individual excluded services within designated categories, by Healthcare Common Procedure Coding System (HCPCS) code. The BBRA's Conference Report explained that this legislation specifically targeted those ''high-cost, low probability'' items and services that ''* * * are not typically administered in a SNF, or are exceptionally expensive, or are given as infusions, thus requiring special staff expertise to administer'' (H.R. Conf. Rep. No. 106–479 at 854). By contrast, other types of services within those categories that ''* * * are relatively inexpensive and are administered routinely in SNFs'' remain subject to SNF consolidated billing under this legislation.

Regarding the comment concerning transports related to radiation therapy, we note that radiation therapy is one of the administratively excluded categories of high-intensity outpatient hospital services. As indicated in the preceding comment, this exclusion already encompasses not only the service itself, but also any associated, medically necessary ambulance transportation between the SNF and the hospital.

H. Application of the SNF PPS to SNF Services Furnished by Swing-Bed Hospitals

In accordance with section 1888(e)(7) of the Act, as amended by section 203 of the BIPA, Part A pays critical access hospitals (CAHs) on a reasonable cost basis for SNF services furnished under a swing-bed agreement. However, effective with cost reporting periods beginning on or after July 1, 2002, the swing-bed services of non-CAH rural hospitals are paid under the SNF PPS. As explained in the final rule for FY 2002 (66 FR 39562, July 31, 2001), we selected this effective date consistent with the statutory provision to integrate swing-bed rural hospitals into the SNF PPS by the end of the SNF transition period, June 30, 2002.

Accordingly, all non-CAH swing-bed rural hospitals have come under the SNF PPS as of June 30, 2003. Therefore, all rates and wage indexes outlined in earlier sections of this final rule for the SNF PPS also apply to all non-CAH swing-bed rural hospitals. A complete discussion of assessment schedules, the MDS and the transmission software (RAVEN–SB for Swing Beds) appears in the final rule for FY 2002 (66 FR 39562, July 31, 2001) and in the final rule for FY 2010 (74 FR 40288, August 11, 2009). As finalized in the FY 2010 SNF PPS final rule (74 FR 40356–57), effective October 1, 2010, non-CAH swing-bed rural hospitals are required to complete an MDS 3.0 swing-bed assessment which is limited to the required demographic, payment, and quality items. The latest changes in the MDS for swing-bed rural hospitals appear on the SNF PPS Web site, *http://www.cms.gov/snfpps.* We received no comments on this aspect of the proposed rule.

IV. Analysis of and Responses to Public Comments on the FY 2011 Update Notice With Comment

In addition to responding to comments received on the FY 2012 proposed rule, we are also taking the opportunity to respond in this section to those comments not addressed elsewhere in this final rule that were received on the FY 2011 notice with comment period, as discussed in the FY 2012 proposed rule (76 FR 26368).

Comment: We received a number of comments related to the delayed implementation of RUG–IV, the implementation of HR–III, and the transition from RUG–IV to HR–III. Many commenters asked for details on how the transition would be done and how claims would be reprocessed upon successful implementation of HR–III. One commenter requested further detail on educational materials that would be made available to providers to ease the system transition once the HR–III grouper has been developed. Some commenters asked that CMS be as transparent as possible in its management of the transition to HR–III.

Response: As discussed in section I.F of this final rule, section 202 of the ''Medicare and Medicaid Extenders Act of 2010'' (Pub. L. 111–309), enacted December 15, 2010, repealed section 10325 of the Affordable Care Act, effectively leaving in place the RUG–IV system as implemented on October 1, 2010. Therefore, HR–III is no longer necessary and there will be no reprocessing of claims related to HR–III. Moreover, as we also noted previously in the FY 2012 SNF PPS proposed rule (76 FR 26368), the repeal of this provision ''* * * effectively renders moot any further discussion of public comments that we had invited on our planned implementation'' of the transition to the HR–III system.

V. Provisions of the Final Rule

In this final rule, in addition to accomplishing the required annual update of the SNF PPS payment rates, we are also finalizing the following revisions to the regulation text:

As discussed previously in section III.F.3.a of this final rule, we are implementing section 3401(b) of the Affordable Care Act by revising § 413.337. We are adding a new paragraph (d)(3) to that section to require that, for FY 2012 and each subsequent FY, the market basket index percentage change (as modified by any applicable forecast error adjustment) be reduced by the MFP adjustment described in section 1886(b)(3)(B)(xi)(II) of the Act in determining the annual update of the unadjusted Federal per diem rates. In addition, consistent with section 1888(e)(5)(B)(ii) of the Act (as added by section 3401(b) of the Affordable Care Act), revised § 413.337(d)(3) also states that the reduction of the market basket index percentage change by the MFP adjustment may result in the market basket index percentage change being less than zero for a fiscal year, and may result in the unadjusted Federal payment rates for a fiscal year being less than such payment rates for the preceding fiscal year.

Further, as discussed in section III.F.3, we are also revising existing paragraphs (d)(1) and (d)(2) of § 413.337 so that the text more accurately tracks the corresponding statutory requirements at section 1888(e)(4)(E) of the Act (§ 413.337(d)(1)), and to specify the existing thresholds that we apply in determining whether a forecast error adjustment is appropriate (§ 413.337(d)(2)).

VI. Collection of Information Requirements

Under the Paperwork Reduction Act of 1995 (PRA), we are required to provide 30-day notice in the **Federal Register** and solicit public comment before a collection of information requirement is submitted to the OMB for review and approval. In order to fairly evaluate whether an information collection should be approved by OMB, section 3506(c)(2)(A) of the PRA requires that we solicit comment on the following issues:

- Need for the information collection and its usefulness in carrying out the proper functions of our agency.
- Accuracy of our estimate of the information collection burden.
- Quality, utility, and clarity of the information to be collected.
- Recommendations to minimize the information collection burden on the affected public, including automated collection techniques.

The information collection requirements referenced in this final rule with regard to resident assessment information used to determine facility

payments are currently approved under OMB control number (OCN): 0938–0739, which relates to the Medicare PPS Assessment Form (MPAF) information collection, and OCN: 0938–0872, which relates to the Minimum Data Set for Swing-Bed Hospitals. We note that this final rule will not affect the burden associated with either of those collections.

Section III.E.4 of this final rule contains a discussion of information collections related to a new required resident assessment, the COT OMRA. The following is a discussion of this new required PPS assessment.

As discussed previously in section III.E.4 of this final rule, we are making certain modifications in the existing requirements for completing OMRAs. We introduced a new COT OMRA, to be completed whenever the intensity of therapy changes to such an extent that it would no longer reflect the RUG–IV classification and payment assigned for a given SNF resident, based on the resident's most recent assessment used for Medicare payment. This will help to ensure that the SNF's payments accurately reflect the amount of therapy actually being provided.

SNFs are required to complete a COT OMRA only when the intensity of therapy actually being furnished changes to such a degree that it would no longer reflect the RUG–IV classification and payment assigned for a given SNF resident based on the most recent assessment used for Medicare payment. The burden associated with this requirement is the time and effort necessary to complete the COT OMRA, coding the appropriate responses, and data reporting timeframes. Because providers currently are not required to report therapy changes that occur outside the observation window of a given PPS assessment, we do not have the relevant data to predict with certainty the number of COT OMRAs that may be required per year. However, we have attempted to use the administrative data currently available as a reasonable proxy to determine estimates of provider burden. We estimate that, based on average burden associated with the EOT OMRA, which uses the same basic item set as the COT OMRA, it will take 50 minutes (0.83 hours) to collect the information necessary for coding a COT OMRA, 10 minutes (0.17 hours) to code the responses, and 2 minutes (0.03 hours) to transmit the results, or a total of 62 minutes (1.03 hours) to complete a single COT OMRA. The estimated cost per COT OMRA is $33.84, as discussed below.

Based on information from the Bureau of Labor Statistics of May, 2009, and a 30 percent benefits rate, we estimated hourly wage rates for a Registered Nurse (RN), and for a data operator. MDS preparation costs were estimated using RN hourly wage rates based on $56,060 per year, which amounts to $0.45 per minute without consideration of employee benefits, and $0.58 per minute after increasing the rate by 30 percent to account for employee benefit compensation. For coding functions, we used a blended rate of $41,090; this was the average for RNs ($56,060/year) and data operators ($26,120/year). The blended rate calculates to $0.33 per minute without consideration of employee benefits, and $0.43 per minute after increasing the rate by 30 percent to account for employee benefit compensation. The blended rate of RN and data operator wages reflects that SNF providers historically have used both RN and support staff for the data entry function. For transmission personnel, we used data operator wages of $26,120 per year, or $0.21 per minute without consideration of employee benefits, and $0.27 per minute after increasing the rate by 30 percent to account for employee benefit compensation. The total amount of time for a single COT OMRA is 62 minutes (1.03 hours), consisting of 50 minutes (0.8333 hours) of RN time for preparation, 10 minutes (0.1667 hours) of blended RN/data operator time for coding, and 2 minutes (0.0333 hours) of data operator time for transmission. This results in an average estimated cost per COT OMRA of $33.84.

The number of stays for 2009 was approximately 2.26 million. Based on a 30-day average length of stay for RUG–IV, we believe the average number of times that a COT OMRA would need to be completed due to a decrease in therapy is once per stay. Based on our review of the first eight months of FY 2011 data, we found that approximately 40 percent of the claims resulted in assignment to a higher-than-projected Rehabilitation RUG. A possible reason for the difference between projected and actual FY 2011 RUG–IV case-mix utilization could involve instances where the intensity of therapy actually being furnished changed (that is, decreased) within the payment period to such a degree that it no longer reflected the RUG–IV classification and payment assigned for a given SNF resident based on the most recent assessment used for Medicare payment. As discussed previously, if such changes or decreases in therapy utilization occur outside the observation window of a given PPS assessment, such changes currently are not captured on a resident assessment, and the provider would continue to be reimbursed under a higher-paying Rehabilitation RUG until the next PPS assessment.

For FY 2012, providers will be required to complete a COT OMRA in these situations. Although we believe that only some of the 40 percent difference is likely attributable to these instances, the 40 percent would provide a quantifiable maximum burden estimate for these cases. At this time, we are unable to determine other quantifiable estimates for decreases in therapy utilization necessitating a COT OMRA. Using the percentage of claims resulting in a higher-than-projected Rehabilitation RUG as a way to estimate the maximum number of times that a therapy decrease could result in the need for a COT OMRA, 40 percent or 813,074 stays could be affected. The total number of estimated COT OMRAs per SNF for FY 2011 would be 57.

In addition, the COT OMRA will also be used when providers find that the therapy provided a given resident warrants the resident being classified into a higher therapy RUG category. As stated above, providers currently are not required to report therapy changes that occur outside the observation window of a given PPS assessment; therefore, we do not have the relevant data to predict with certainty the number of COT OMRAs that may be required per year due to an increase in therapy. We have used the historical data available at this time to quantify situations where an increase in therapy occurs. The Start-of-Therapy (SOT) OMRA represents situations where therapy has increased to a level significant enough to change the RUG to a therapy RUG. The estimate for the possible number of times that a COT OMRA would be required due to an increase in therapy uses the number of SOT OMRAs as a proxy. Using the number of SOT OMRAs completed in the first eight months of FY 2011 projected for the entire year, we estimate that the total COT OMRAs required due to an increase in therapy would be 71,330, or 5 times per facility per year. Therefore, the estimated total number of COT OMRAs per facility per year is 62. The total annual hour burden for completing COT OMRAs is estimated to be 737,003 hours for reporting, 147,401 hours for coding, and 29,480 hours for transmission, for a total burden of 913,884 hours for all 14,266 SNFs. Based on an average estimated cost per COT OMRA of $33.84, we estimate that the additional annual cost across all SNFs would be approximately $29.93 million, or $2,097.87 per facility.

Further, we note that the completion of an EOT–R OMRA, as discussed in section III.E.4, would be entirely voluntary on the part of the facility and, thus, would not represent the imposition of a mandatory burden.

VII. Economic Analyses

A. Regulatory Impact Analysis

1. Introduction

We have examined the impacts of this final rule as required by Executive Order 12866 on Regulatory Planning and Review (September 30, 1993), Executive Order 13563 on Improving Regulation and Regulatory Review (January 18, 2011), the Regulatory Flexibility Act (RFA) (September 19, 1980, Pub. L. 96–354), section 1102(b) of the Act, section 202 of the Unfunded Mandates Reform Act of 1995 (UMRA, March 22, 1995; Pub. L. 104–4), Executive Order 13132 on Federalism (August 4, 1999), and the Congressional Review Act (5 U.S.C. 804(2)).

Executive Orders 12866 and 13563 direct agencies to assess all costs and benefits of available regulatory alternatives and, if regulation is necessary, to select regulatory approaches that maximize net benefits (including potential economic, environmental, public health and safety effects, distributive impacts, and equity). Executive Order 13563 emphasizes the importance of quantifying both costs and benefits, of reducing costs, of harmonizing rules, and of promoting flexibility. This rule has been designated an economically significant rule, under section 3(f)(1) of Executive Order 12866. Accordingly, we have prepared a regulatory impact analysis (RIA) as further discussed below. Also, the rule has been reviewed by the Office of Management and Budget.

2. Statement of Need

This final rule updates the SNF prospective payment rates for fiscal year 2012 as required under section 1888(e)(4)(E) of the Act. It also responds to section 1888(e)(4)(H) of the Act, which requires the Secretary to ''provide for publication in the **Federal Register**'' before the August 1 that precedes the start of each fiscal year, the unadjusted Federal per diem rates, the case-mix classification system, and the factors to be applied in making the area wage adjustment. As these statutory provisions prescribe a detailed methodology for calculating and disseminating payment rates under the SNF PPS, we do not have the discretion to adopt an alternative approach.

3. Overall Impacts

We estimate the aggregate impact of the FY 2012 final rule would be a net decrease of $3.87 billion in payments to SNFs, resulting from a $600 million increase from the update to the payment rates and a $4.47 billion reduction from the recalibration of the case-mix adjustment. Accordingly, we have prepared a RIA that, to the best of our ability, presents the costs and benefits of the rulemaking.

The update set forth in this final rule applies to payments in FY 2012. Accordingly, the analysis that follows only describes the impact of this single year. In accordance with the requirements of the Act, we will publish a notice for each subsequent FY that will provide for an update to the payment rates and include an associated impact analysis.

4. Detailed Economic Analysis

This final rule sets forth updates of the SNF PPS rates contained in the update notice for FY 2011 (75 FR 42886, July 22, 2010) and the associated correction notice (75 FR 55801, September 14, 2010). Based on the above, we estimate that the FY 2012 aggregate impact would be a net decrease of $3.87 billion in payments to SNFs, resulting from a $600 million increase from the update to the payment rates and a $4.47 billion reduction from the recalibration of the case-mix adjustment. The impact analysis of this final rule represents the projected effects of the changes in the SNF PPS from FY 2011 to FY 2012. We assess the effects by estimating payments while holding all other payment-related variables constant. Although the best data available are utilized, there is no attempt to predict behavioral responses to these changes, or to make adjustments for future changes in such variables as days or case-mix.

Certain events may occur to limit the scope or accuracy of our impact analysis, as this analysis is future-oriented and, thus, very susceptible to forecasting errors due to certain events that may occur within the assessed impact time period. Some examples of possible events may include newly legislated general Medicare program funding changes by the Congress, or changes specifically related to SNFs. In addition, changes to the Medicare program may continue to be made as a result of previously enacted legislation, or new statutory provisions. Although these changes may not be specific to the SNF PPS, the nature of the Medicare program is that the changes may interact and, thus, the complexity of the interaction of these changes could make it difficult to predict accurately the full scope of the impact upon SNFs.

In accordance with section 1888(e)(4)(E) and (e)(5) of the Act, we update the FY 2011 payment rates by a factor equal to the market basket index percentage increase adjusted by the FY 2010 forecast error adjustment (if applicable) and the MFP adjustment to determine the payment rates for FY 2012. As discussed previously, for FY 2012 and each subsequent FY, as required by section 1888(e)(5)(B) of the Act as amended by section 3401(b) of the Affordable Care Act, the market basket percentage is reduced by the MFP adjustment. The special AIDS add-on established by section 511 of the MMA remains in effect until ''* * * such date as the Secretary certifies that there is an appropriate adjustment in the case mix. * * *'' We have not provided a separate impact analysis for the MMA provision. Our latest estimates indicate that there are fewer than 3,500 beneficiaries who qualify for the AIDS add-on payment. The impact to Medicare is included in the ''total'' column of Table 11. In updating the rates for FY 2012, we made a number of standard annual revisions and clarifications mentioned elsewhere in this final rule (for example, the update to the wage and market basket indexes used for adjusting the Federal rates).

We estimate that the aggregate impact for the FY 2012 updates discussed in this final rule would be a net decrease of $3.87 billion in payments to SNFs, resulting from a $600 million increase from the update to the payment rates and a $4.47 billion reduction from the recalibration of the case-mix adjustment. The FY 2012 impacts are presented in Table 11.

The breakdown of the various categories of data in Table 11 is as follows.

The first column shows the breakdown of all SNFs by urban or rural status, hospital-based or freestanding status, and census region.

The ''total'' row shows the estimated effects of the various changes on all facilities. The next six rows show the effects on facilities split by hospital-based, freestanding, urban, and rural categories. The urban and rural designations are based on the location of the facility under the CBSA designation. The next 19 rows show the effects on urban versus rural status by census region. The last 3 rows show the effects on ownership by government, profit and non-profit status.

The second column in Table 11 shows the number of facilities in the impact database.

The third column in Table 11 shows the effects of recalibrating the nursing CMIs of the RUG–IV therapy groups. As explained previously in section III.B.2 of this final rule, we are implementing the recalibration so that the CMIs more accurately reflect parity in expenditures under the RUG–IV system introduced in FY 2011 relative to payments under the previous RUG–53 system, based on our review of the initial eight months of FY 2011 claims and MDS data. The total impact of this change is a decrease of 12.6 percent. We note that some individual providers may experience larger or smaller decreases in payment than others due to case-mix utilization.

The fourth column of Table 11 shows the effect of the annual update to the wage index. This represents the effect of using the most recent wage data available. The total impact of this change is zero percent; however, there are distributional effects of the change.

The fifth column of Table 11 shows the effect of all of the changes on the FY 2012 payments. The update of 1.7 percent, consisting of the market basket increase of 2.7 percentage points, reduced by the 1.0 percentage point MFP adjustment is constant for all providers and, though not shown individually, is included in the total column. It is projected that aggregate payments will decrease by 11.1 percent, assuming that facilities do not change their care delivery and billing practices in response.

As shown in Table 11, the combined effects of all of the changes vary by specific types of providers and by location.

TABLE 11—RUG–IV PROJECTED IMPACT TO THE SNF PPS FOR FY 2012

	Number of facilities	Revised CMIs percent	Update wage data	Total FY 2012 change (percent)
Group:				
Total	14,706	−12.6	0.0	−11.1
Urban	10,321	−12.8	0.0	−11.3
Rural	4,385	−11.9	0.1	−10.3
Hospital based urban	454	−12.4	0.1	−10.8
Freestanding urban	9,867	−12.8	0.0	−11.3
Hospital based rural	341	−11.3	0.0	−9.8
Freestanding rural	4,044	−11.9	0.1	−10.3
Urban by region:				
New England	807	−12.6	0.0	−11.1
Middle Atlantic	1,436	−12.9	0.1	−11.3
South Atlantic	1,714	−12.8	−0.1	−11.4
East North Central	2,001	−12.9	−0.5	−11.8
East South Central	493	−12.7	−0.4	−11.6
West North Central	848	−12.8	0.2	−11.1
West South Central	1,167	−12.6	0.5	−10.7
Mountain	472	−12.9	0.1	−11.3
Pacific	1,378	−12.8	0.3	−11.1
Outlying	5	−8.9	1.2	−6.3
Rural by region:				
New England	142	−11.7	1.0	−9.3
Middle Atlantic	236	−12.3	−0.1	−10.9
South Atlantic	558	−11.8	−0.2	−10.4
East North Central	891	−12.1	−0.2	−10.7
East South Central	464	−11.7	−0.5	−10.7
West North Central	1,043	−12.0	0.4	−10.1
West South Central	713	−11.7	0.8	−9.5
Mountain	219	−11.8	0.3	−10.0
Pacific	119	−11.8	1.0	−9.4
Ownership:				
Government	769	−12.4	−0.1	−11.0
Profit	10,172	−12.6	0.0	−11.1
Non-profit	3,765	−12.7	0.0	−11.2

Note: The Total column includes the 2.7 percent market basket increase, reduced by the 1.0 percentage point MFP adjustment. Additionally, we found no SNFs in rural outlying areas.

5. Alternatives Considered

As described above, the aggregate impact for FY 2012 of the updates discussed in this final rule would be a net decrease of $3.87 billion in payments to SNFs, resulting from a $600 million increase from the update to the payment rates and a $4.47 billion reduction from the recalibration of the case-mix adjustment. In view of the potential economic impact, we considered the alternatives described below.

Section 1888(e) of the Act establishes the SNF PPS for the payment of Medicare SNF services for cost reporting periods beginning on or after July 1, 1998. This section of the statute prescribes a detailed formula for calculating payment rates under the SNF PPS, and does not provide for the use of any alternative methodology. It specifies that the base year cost data to be used for computing the SNF PPS payment rates must be from FY 1995 (October 1, 1994, through September 30, 1995). In accordance with the statute, we also incorporated a number of elements into the SNF PPS (for example, case-mix classification methodology, market basket index, a wage index, and the urban and rural distinction used in the development or adjustment of the Federal rates). Further, section 1888(e)(4)(H) of the Act specifically requires us to disseminate the payment rates for each new FY through the **Federal Register**, and to do so before the August 1 that precedes the start of the new fiscal year. Accordingly, we are not

pursuing alternatives for the payment methodology as discussed above.

Using our authority to establish an appropriate adjustment for case mix under section 1888(e)(4)(G)(i) of the Act, this final rule finalizes a recalibration of the adjustment to the nursing case-mix indexes based on actual FY 2011 data. In the FY 2010 SNF PPS final rule (74 FR 40339), we committed to monitoring the accuracy and effectiveness of the parity adjustment to maintain budget neutrality. We believe that using actual FY 2011 claims data to perform the recalibration analysis results in case-mix weights that better reflect the resources used, produces more accurate payment, and represents an appropriate case-mix adjustment. Using FY 2011 data is consistent with our intent to make the change from the RUG–53 model to the RUG–IV model in a budget neutral manner.

In reviewing our initial projections, we found that the disparity between projected RUG–IV utilization for FY 2011 and actual RUG–IV utilization in FY 2011, which formed the basis for our considering a recalibration of the nursing case-mix indexes, was at least partially the result of a shift in the mode of therapy provided to beneficiaries in a Part A stay under RUG–IV. The amount of concurrent therapy decreased significantly from historical levels, with a significant portion of the SNFs reporting 0 minutes of concurrent therapy for all MDS 3.0 assessments submitted for FY 2011. Many of these facilities reported large increases in the amount of group therapy provided during the same time period.

For the proposed rule, we used 3 months of data (first quarter FY 2011) to calculate the initial parity adjustment and stated that we would observe utilization trends for a greater period of FY 2011 to confirm our preliminary assessment. We have now used 8 months of FY 2011 data as the basis for the recalibration discussed in section III.B.2 above and the data have confirmed our preliminary assessment. Therefore, as discussed in section III.B.2 of this final rule, we are implementing a recalibration of the nursing CMIs of the RUG–IV therapy groups based on eight months of FY 2011 MDS and claims data.

Both during development of the proposed rule (76 FR 26372, 26404) and in response to comments we received on the proposed rule, as discussed in section III.B.2 above, we considered various alternatives for implementing a recalibrated case-mix adjustment. Most notably, as discussed in section III.B.2 of this final rule, we considered applying the recalibration to all of the nursing CMIs, rather than just the nursing CMIs for the RUG–IV therapy groups as we have finalized in this final rule.

However, as noted in the proposed rule (76 FR 26372, 26404), we found that an across-the-board recalibration of the nursing CMIs that included the complex medical groups (approximately 8 percent of the total SNF Part A population), would affect patients in these complex medical groups disproportionately and negatively. Moreover, we are concerned that reducing payment rates for both the therapy and the complex medical patients could inadvertently create an access problem for beneficiaries with complex medical care needs. The increasing volume of therapy patients during the past several years, in combination with the increasing SNF Medicare profit margins, suggests that the care needs for therapy patients may be more predictable and less costly than those for beneficiaries with severe medical conditions. In reviewing FY 2011 MDS assessment data, we found that approximately 30 percent of the SNF Part A patients did not have a medical need that would qualify them for coverage under the SNF PPS. Reducing the rates paid for beneficiaries with complex medical conditions at the same time therapy rates are being adjusted may create access problems for patients with complex medical and rehabilitation needs. Thus, while we considered an across-the-board recalibration of the nursing CMIs, we decided it would be more prudent to keep the payment levels for the low-volume complex medical services at their present levels for 2012. We plan to reassess the adequacy of the complex medical payment rates as part of the development of the NTA component discussed in section III.C.1 of this final rule. We believe that applying the recalibration to only the nursing CMIs of the RUG–IV therapy groups will restore the system to the intended budget neutrality and ensure adequate access to quality SNF care for the important subset of Medicare beneficiaries needing complex medical care.

As described in section III.B.2 of this final rule and in sections XII.A.5 and II.B.2 of the proposed rule, we also considered how the recalibration might be implemented so as to mitigate the economic impact of the recalibration on facilities. Specifically, we considered mitigating the impact of the recalibration by phasing in the negative adjustments prospectively over multiple years until parity was achieved. However, as discussed elsewhere in this preamble, we believe that in implementing RUG–IV, it is essential that we stabilize the baseline as quickly as possible without creating a significant adverse effect on the industry or to beneficiaries. For the reasons discussed in section II.B.2 of this final rule, we do not believe that implementation of the full recalibration in FY 2012 should negatively impact facilities, beneficiaries or quality of care. Moreover, implementing the recalibration over a multi-year period would continue the significant overpayments observed in FY 2011 and could further destabilize the SNF PPS.

We received a number of comments on the impact analysis contained in the proposed rule which, along with our responses, appear below.

Comment: Several commenters believed that CMS did not consider adequately possible alternative methodologies for applying or implementing the recalibration of the case-mix indexes. Specifically, commenters believed that CMS should consider a phase-in approach for the recalibration, if it were to be finalized.

Response: We believe that the discussion of alternatives in this section above, in section III.B.2 above, as well as in the FY 2012 proposed rule (76 FR 26372, 26403 through 26404) provides sufficient consideration of alternatives as well as appropriate justification for our finalized changes. Regarding a phase-in approach, we noted in section III.B.2 above our belief that the 18.1 percent SNF profit margins for Medicare even before the FY 2011 overpayments occurred would justify a full recalibration in FY 2012. It is also important to note that this recalibration would serve to remove an unintended spike in payments rather than decreasing an otherwise appropriate payment amount; thus, we do not believe that the recalibration should negatively affect facilities, beneficiaries, or quality of care, or create an undue hardship on providers. In fact, notwithstanding the recalibration, the FY 2012 payment rates will actually be 3.4 percent higher than the rates established for FY 2010, the last period prior to the unintended spike in payment levels. We continue to believe that in implementing RUG–IV, it is essential that we stabilize the baseline as quickly as possible without creating a significant adverse effect on the industry or to beneficiaries. Utilizing a phase-in approach would only add to, rather than reduce, the cumulative excess payments.

Comment: Several commenters expressed concern that the impact analysis presented in the proposed rule did not account adequately for the total

economic impact of the policy changes discussed in the FY 2012 proposed rule. One commenter stated specifically that the implementation of the proposed changes could lead the U.S. economy back into a deep recession.

Response: As indicated in Table 11 above, the changes due to the recalibration of the CMIs (which is arguably the only proposed change which would have a definitive negative impact on current facility payments) are expected to result in a decrease in Medicare payments to SNFs of 12.6 percent. We note that the recalibration is only intended to restore budget neutrality between the RUG–53 and RUG–IV case-mix systems, which effectively will align overall payments under RUG–IV in FY 2012 with those under RUG–III, not accounting for subsequent increases associated with the annual market basket increase.

Based on a comparative analysis of the actual payment amounts reflected on claims paid in FY 2010 and in FY 2011, payments to facilities increased in FY 2011 by an average of approximately $66 per day per resident for all providers. Furthermore, as noted in section III.B.2 of this final rule, the aggregate Medicare margin for freestanding SNFs in FY 2009, prior to the implementation of the parity adjustment in FY 2011 and the resulting overpayments, was 18.1 percent, up from 16.6 percent in 2008. Therefore, given these high Medicare margins coupled with the fact that Medicare payments represent a small percentage of aggregate facility revenues (considering all payers), we do not believe it can be concluded that a return to the intended payment levels after the FY 2011 short-term spike in payments will result in a direct and significant negative macroeconomic effect on the U.S. economy. For these reasons, we believe that the regulatory impact analysis both in this final rule and in the proposed rule adequately assesses the economic impact of the changes to the RUG–IV system.

6. Accounting Statement

As required by OMB Circular A–4 (available online at *http://www.whitehouse.gov/sites/default/files/omb/assets/regulatory_matters_pdf/a-4.pdf*), in Table 12, we have prepared an accounting statement showing the classification of the expenditures associated with the provisions of this final rule. Tables 12 provides our best estimate of the possible changes in Medicare payments under the SNF PPS as a result of the policies in this final rule, based on the data for 14,706 SNFs in our database. All expenditures are classified as transfers to Medicare providers (that is, SNFs).

TABLE 12—ACCOUNTING STATEMENT: CLASSIFICATION OF ESTIMATED EXPENDITURES, FROM THE 2011 SNF PPS FISCAL YEAR TO THE 2012 SNF PPS FISCAL YEAR

Category	Transfers
Annualized Monetized Transfers	−$3.87 billion.*
From Whom To Whom?	Federal Government to SNF Medicare Providers.

*The net decrease of $3.87 billion in transfer payments is a result of the decrease of $4.47 billion due to the recalibration of the case mix adjustment, together with the increase of $600 million due to the MFP-adjusted market basket update.

7. Conclusion

The overall estimated payments for SNFs in FY 2012 are projected to decrease by $3.87 billion, or 11.1 percent, compared with those in FY 2011. We estimate that under RUG–IV, SNFs in urban and rural areas would experience, on average, an 11.3 and 10.3 percent decrease, respectively, in estimated payments compared with FY 2011. Providers in the urban East North Central region would experience the largest estimated decrease in payments of approximately 11.8 percent. In order to have achieved parity between the RUG–53 and RUG–IV case-mix systems in FY 2011, aggregated payments would have had to have been 11.1 percent lower. It should also be noted that the FY 2012 payment rates, which remove the unanticipated excess payments resulting from the FY 2011 parity adjustment, are still 3.4 percent higher than the FY 2010 rates, the last fiscal year before the introduction of RUG–IV.

B. Regulatory Flexibility Act Analysis

The Regulatory Flexibility Act (RFA) requires agencies to analyze options for regulatory relief of small entities, if a rule has a significant impact on a substantial number of small entities. For purposes of the RFA, small entities include small businesses, non-profit organizations, and small governmental jurisdictions. Most SNFs and most other providers and suppliers are small entities, either by their non-profit status or by having revenues of $13.5 million or less in any 1 year. For purposes of the RFA, approximately 91 percent of SNFs are considered small businesses according to the Small Business Administration's latest size standards, with total revenues of $13.5 million or less in any 1 year. (For details, see the Small Business Administration's Web site at *http://ecfr.gpoaccess.gov/cgi/t/text/text-idx?c=ecfr&sid=2465b064ba6965cc1fbd2eae60854b11&rgn=div8&view=text&node=13:1.0.1.1.16.1.266.9&idno=13*). Individuals and States are not included in the definition of a small entity. In addition, approximately 21 percent of SNFs classified as small entities are non-profit organizations. Finally, the estimated number of small business entities does not distinguish provider establishments that are within a single firm and, therefore, the number of SNFs classified as small entities may be higher than the estimate above.

This final rule updates the SNF PPS rates published in the update notice for FY 2011 (75 FR 42886, July 22, 2010) and the associated correction notice (75 FR 55801, September 14, 2010). We estimate that implementing the recalibration discussed in section II.B.2 above would result in a net decrease of $3.87 billion in payments to SNFs for FY 2012. This reflects a $600 million increase from the update to the payment rates and a $4.47 billion reduction from the recalibration of the case-mix adjustment. As indicated in Table 11, the estimated effect of the recalibration on facilities for FY 2012 would be an aggregate negative impact of 11.1 percent. While it is projected in Table 11 that all providers would experience a net decrease in payments, we note that some individual providers may experience larger decreases in payments than others due to the distributional impact of the FY 2012 wage indexes and the degree of Medicare utilization.

Guidance issued by the Department of Health and Human Services on the proper assessment of the impact on small entities in rulemakings, utilizes a cost or revenue impact of 3 to 5 percent as a significance threshold under the RFA. According to MedPAC, Medicare covers approximately 12 percent of total patient days in freestanding facilities and 23 percent of facility revenue (March 2011). However, it is worth

noting that the distribution of days and payments is highly variable. That is, the majority of SNFs have significantly lower Medicare utilization. As a result, for most facilities, when all payers are included in the revenue stream, the overall impact effect to total revenues should be substantially less than those presented in Table 11. Therefore, the Secretary has determined that this final rule may have a significant impact on a substantial number of small entities.

We offer an analysis of the alternatives considered in section VII.A.4 of this final rule. The analysis above, together with the remainder of this preamble, constitutes the final regulatory flexibility analysis.

In addition, section 1102(b) of the Social Security Act requires us to prepare a regulatory impact analysis (RIA) if a rule may have a significant impact on the operations of a substantial number of small rural hospitals. This analysis must conform to the provisions of section 603 of the RFA. For purposes of section 1102(b) of the Act, we define a small rural hospital as a hospital that is located outside of a Metropolitan Statistical Area and has fewer than 100 beds. This final rule will affect small rural hospitals that (a) furnish SNF services under a swing-bed agreement or (b) have a hospital-based SNF. We anticipate that the impact on small rural hospitals would be similar to the impact on SNF providers overall. Therefore, the Secretary has determined that this final rule may have a significant impact on the operations of a substantial number of small rural hospitals.

Comment: One commenter believed that the RFA analysis and RIA discussed in the proposed rule did not sufficiently account for the impact of the proposed changes, specifically the recalibration of the case-mix indexes, on small entities. Also, the commenter pointed out that the portion of SNFs which may be characterized properly as small entities may, in fact, be higher than our estimates. The commenter asserted that in evaluating the effect of the proposed changes on small entities ''as a whole,'' the analysis must necessarily consider their effect on the entity's overall margins. This commenter also asserted that CMS failed to provide sufficient discussion of possible alternatives. The commenter further suggested that the RIA cannot also serve to meet the requirements of the RFA.

Response: We do not agree with the commenter's assertion that the RFA or RIA discussions in the proposed rule were insufficient. First, we would note that, as discussed above, approximately 91 percent of all SNFs may be classified as small entities. As the commenter pointed out, the portion of SNFs which may be characterized properly as small entities may, in fact, be higher than our estimates. Therefore, any discussion of impacts throughout the proposed rule, as well as in this final rule, may be directly characterized as an analysis of the impact of the FY 2012 changes to the SNF PPS on small entities. Moreover, the focus on small entities in this instance (a category that would include the small rural hospitals that are the subject of a RIA) also means that the analyses required under the RIA and the RFA are, in fact, directly interlinked in this situation, as essentially the same factors are being examined in both contexts. Also, guidance issued by the Department of Health and Human Services on the proper assessment of the impact on small entities in rulemakings, utilizes a total cost or revenue impact of 3 to 5 percent as a significance threshold under the RFA analysis and not overall margins. As a result, the addition of other (non-Medicare) revenue streams effectively dilutes the impact of any Medicare changes, as we noted previously in this discussion as well as in the proposed rule: ''* * * for most facilities, when all payers are included in the revenue stream, the overall impact effect [of the Medicare changes] to total revenues should be substantially less * * *'' (76 FR 26405).

Furthermore, we would note that we provided additional data on our Web site on therapy utilization trends for the different types of SNF providers (profit, non-profit, and government), which are available online at *http://www.cms.gov/SNFPPS/02_Spotlight.asp.* This additional data, as well as our impact analysis in the proposed rule, illustrated that all SNFs, including small entities and non-profits, have experienced a significant increase in payments in FY 2011. We do not believe that the recalibration constitutes a rate cut but instead represents a return to the appropriate level of SNF payments, which have been found to be more than adequate for SNFs and small entities within the SNF industry. This information, as well as the discussion of alternatives in section XII.A.5 of the proposed rule, is sufficient to fulfill our obligations under the RFA.

Finally, given our discussion of alternatives in section VIII.D of this final rule and elsewhere in this preamble, and our analysis of the potential impacts on the SNF industry as a whole, we believe that the requirements under the RFA for providing this final RFA analysis have been properly addressed.

C. Unfunded Mandates Reform Act Analysis

Section 202 of the Unfunded Mandates Reform Act of 1995 (UMRA) also requires that agencies assess anticipated costs and benefits before issuing any rule whose mandates require spending in any 1 year of $100 million in 1995 dollars, updated annually for inflation. In 2011, that threshold is approximately $136 million. This final rule would not impose spending costs on State, local, or Tribal governments in the aggregate, or by the private sector, of $136 million.

D. Federalism Analysis

Executive Order 13132 establishes certain requirements that an agency must meet when it promulgates a proposed rule (and subsequent final rule) that impose substantial direct requirement costs on State and local governments, preempts State law, or otherwise has Federalism implications. This final rule would have no substantial direct effect on State and local governments, preempt State law, or otherwise have Federalism implications.

List of Subjects in 42 CFR Part 413

Health facilities, Kidney diseases, Medicare, Reporting and recordkeeping requirements.

For the reasons set forth in the preamble, the Centers for Medicare & Medicaid Services amends 42 CFR chapter IV as set forth below:

PART 413—PRINCIPLES OF REASONABLE COST REIMBURSEMENT; PAYMENT FOR END-STAGE RENAL DISEASE SERVICES; OPTIONAL PROSPECTIVELY DETERMINED PAYMENT RATES FOR SKILLED NURSING FACILITIES

■ 1. The authority citation for part 413 continues to read as follows:

Authority: Secs. 1102, 1812(d), 1814(b), 1815, 1833(a), (i), and (n), 1861(v), 1871, 1881, 1883, and 1886 of the Social Security Act (42 U.S.C. 1302, 1395d(d), 1395f(b), 1395g, 1395l(a), (i), and (n), 1395x(v), 1395hh, 1395rr, 1395tt, and 1395ww); and sec. 124 of Public Law 106–133 (113 Stat. 1501A–332).

Subpart J—Prospective Payment for Skilled Nursing Facilities

■ 2. Section 413.337 is amended by—

■ A. Revising paragraphs (d)(1) and (d)(2).

■ B. Adding paragraph (d)(3).

The revisions and addition read as follows:

§ 413.337 Methodology for calculating the prospective payment rates.

* * * * *

(d) * * *

(1) *Update formula.* The unadjusted Federal payment rate shall be updated as follows:

(i) For the initial period beginning on July 1, 1998, and ending on September 30, 1999, the unadjusted Federal payment rate is equal to the rate computed under paragraph (b)(5)(iii) of this section increased by a factor equal to the SNF market basket index percentage change for such period minus 1.0 percentage point.

(ii) For fiscal year 2000, the unadjusted Federal payment rate is equal to the rate computed for the initial period described in paragraph (d)(1)(i) of this section increased by a factor equal to the SNF market basket index percentage change for that period minus 1.0 percentage point.

(iii) For fiscal year 2001, the unadjusted Federal payment rate is equal to the rate computed for the previous fiscal year increased by a factor equal to the SNF market basket index percentage change for the fiscal year.

(iv) For fiscal years 2002 and 2003, the unadjusted Federal payment rate is equal to the rate computed for the previous fiscal year increased by a factor equal to the SNF market basket index percentage change for the fiscal year involved minus 0.5 percentage points.

(v) For each subsequent fiscal year, the unadjusted Federal payment rate is equal to the rate computed for the previous fiscal year increased by a factor equal to the SNF market basket index percentage change for the fiscal year involved.

(2) *Forecast error adjustment.* Beginning with fiscal year 2004, an adjustment to the annual update of the previous fiscal year's rate will be computed to account for forecast error. The initial adjustment (in fiscal year 2004) to the update of the previous fiscal year's rate will take into account the cumulative forecast error between fiscal years 2000 and 2002. Subsequent adjustments in succeeding fiscal years will take into account the forecast error from the most recently available fiscal year for which there is final data. The forecast error adjustment applies whenever the difference between the forecasted and actual percentage change in the SNF market basket index exceeds the following threshold:

(i) 0.25 percentage points for fiscal years 2004 through 2007; and

(ii) 0.5 percentage points for fiscal year 2008 and subsequent fiscal years.

(3) *Multifactor productivity (MFP) adjustment.* For fiscal year 2012 and each subsequent fiscal year, the SNF market basket index percentage change for the fiscal year (as modified by any applicable forecast error adjustment under paragraph (d)(2) of this section) shall be reduced by the MFP adjustment described in section 1886(b)(3)(B)(xi)(II) of the Act. The reduction of the market basket index percentage change by the MFP adjustment may result in the market basket index percentage change being less than zero for a fiscal year, and may result in the unadjusted Federal payment rates for a fiscal year being less than such payment rates for the preceding fiscal year.

* * * * *

Authority: (Catalog of Federal Domestic Assistance Program No. 93.773, Medicare—Hospital Insurance; and Program No. 93.774, Medicare—Supplementary Medical Insurance Program)

Dated: July 21, 2011.

Donald M. Berwick,

Administrator, Centers for Medicare & Medicaid Services.

Approved: July 27, 2011.

Kathleen Sebelius,

Secretary, Department of Health and Human Services.

Note: The following Addendum will not appear in the Code of Federal Regulations.

Addendum—FY 2012 CBSA Wage Index Tables

In this addendum, we provide the wage index tables referred to in the preamble to this final rule. Tables A and B display the CBSA-based wage index values for urban and rural providers.

BILLING CODE 4120–01–P

TABLE A: FY 2012 WAGE INDEX FOR URBAN AREAS BASED ON CBSA LABOR MARKET AREAS

CBSA Code	Urban Area (Constituent Counties)	Wage Index
10180	Abilene, TX Callahan County, TX Jones County, TX Taylor County, TX	0.8444
10380	Aguadilla-Isabela-San Sebastián, PR Aguada Municipio, PR Aguadilla Municipio, PR Añasco Municipio, PR Isabela Municipio, PR Lares Municipio, PR Moca Municipio, PR Rincón Municipio, PR San Sebastián Municipio, PR	0.3611
10420	Akron, OH Portage County, OH Summit County, OH	0.8814
10500	Albany, GA Baker County, GA Dougherty County, GA Lee County, GA Terrell County, GA Worth County, GA	0.8687
10580	Albany-Schenectady-Troy, NY Albany County, NY Rensselaer County, NY Saratoga County, NY Schenectady County, NY Schoharie County, NY	0.8680
10740	Albuquerque, NM Bernalillo County, NM Sandoval County, NM Torrance County, NM Valencia County, NM	0.9550
10780	Alexandria, LA Grant Parish, LA Rapides Parish, LA	0.8026
10900	Allentown-Bethlehem-Easton, PA-NJ Warren County, NJ Carbon County, PA Lehigh County, PA Northampton County, PA	0.9260
11020	Altoona, PA Blair County, PA	0.8917
11100	Amarillo, TX Armstrong County, TX Carson County, TX Potter County, TX Randall County, TX	0.8714
11180	Ames, IA Story County, IA	1.0009
11260	Anchorage, AK Anchorage Municipality, AK Matanuska-Susitna Borough, AK	1.2133
11300	Anderson, IN Madison County, IN	0.9266
11340	Anderson, SC Anderson County, SC	0.8524
11460	Ann Arbor, MI Washtenaw County, MI	1.0128
11500	Anniston-Oxford, AL Calhoun County, AL	0.7979

11540	Appleton, WI Calumet County, WI Outagamie County, WI	0.9226
11700	Asheville, NC Buncombe County, NC Haywood County, NC Henderson County, NC Madison County, NC	0.8918
12020	Athens-Clarke County, GA Clarke County, GA Madison County, GA Oconee County, GA Oglethorpe County, GA	0.9642
12060	Atlanta-Sandy Springs-Marietta, GA Barrow County, GA Bartow County, GA Butts County, GA Carroll County, GA Cherokee County, GA Clayton County, GA Cobb County, GA Coweta County, GA Dawson County, GA DeKalb County, GA Douglas County, GA Fayette County, GA Forsyth County, GA Fulton County, GA Gwinnett County, GA Haralson County, GA Heard County, GA Henry County, GA Jasper County, GA Lamar County, GA Meriwether County, GA Newton County, GA Paulding County, GA Pickens County, GA Pike County, GA Rockdale County, GA Spalding County, GA Walton County, GA	0.9575
12100	Atlantic City-Hammonton, NJ Atlantic County, NJ	1.1033
12220	Auburn-Opelika, AL Lee County, AL	0.7877
12260	Augusta-Richmond County, GA-SC Burke County, GA Columbia County, GA McDuffie County, GA Richmond County, GA Aiken County, SC Edgefield County, SC	0.9529
12420	Austin-Round Rock-San Marcos, TX Bastrop County, TX Caldwell County, TX Hays County, TX Travis County, TX Williamson County, TX	0.9535
12540	Bakersfield-Delano, CA Kern County, CA	1.1817
12580	Baltimore-Towson, MD Anne Arundel County, MD Baltimore County, MD Carroll County, MD Harford County, MD Howard County, MD Queen Anne's County, MD Baltimore City, MD	1.0151
12620	Bangor, ME Penobscot County, ME	0.9979
12700	Barnstable Town, MA Barnstable County, MA	1.2838
12940	Baton Rouge, LA Ascension Parish, LA East Baton Rouge Parish, LA East Feliciana Parish, LA Iberville Parish, LA Livingston Parish, LA Pointe Coupee Parish, LA St. Helena Parish, LA West Baton Rouge Parish, LA West Feliciana Parish, LA	0.8523
12980	Battle Creek, MI Calhoun County, MI	0.9935

13020	Bay City, MI Bay County, MI	0.8927
13140	Beaumont-Port Arthur, TX Hardin County, TX Jefferson County, TX Orange County, TX	0.8723
13380	Bellingham, WA Whatcom County, WA	1.1748
13460	Bend, OR Deschutes County, OR	1.1395
13644	Bethesda-Rockville-Frederick, MD Frederick County, MD Montgomery County, MD	1.0305
13740	Billings, MT Carbon County, MT Yellowstone County, MT	0.8576
13780	Binghamton, NY Broome County, NY Tioga County, NY	0.8731
13820	Birmingham-Hoover, AL Bibb County, AL Blount County, AL Chilton County, AL Jefferson County, AL St. Clair County, AL Shelby County, AL Walker County, AL	0.8436
13900	Bismarck, ND Burleigh County, ND Morton County, ND	0.7232
13980	Blacksburg-Christiansburg-Radford, VA Giles County, VA Montgomery County, VA Pulaski County, VA Radford City, VA	0.8281
14020	Bloomington, IN Greene County, IN Monroe County, IN Owen County, IN	0.8725
14060	Bloomington-Normal, IL McLean County, IL	0.9477
14260	Boise City-Nampa, ID Ada County, ID Boise County, ID Canyon County, ID Gem County, ID Owyhee County, ID	0.9279
14484	Boston-Quincy, MA Norfolk County, MA Plymouth County, MA Suffolk County, MA	1.2283
14500	Boulder, CO Boulder County, CO	1.0086
14540	Bowling Green, KY Edmonson County, KY Warren County, KY	0.8599
14740	Bremerton-Silverdale, WA Kitsap County, WA	1.1288
14860	Bridgeport-Stamford-Norwalk, CT Fairfield County, CT	1.2914
15180	Brownsville-Harlingen, TX Cameron County, TX	0.9183
15260	Brunswick, GA Brantley County, GA Glynn County, GA McIntosh County, GA	0.9068
15380	Buffalo-Niagara Falls, NY Erie County, NY Niagara County, NY	0.9750
15500	Burlington, NC Alamance County, NC	0.8665
15540	Burlington-South Burlington, VT Chittenden County, VT Franklin County, VT Grand Isle County, VT	1.0021
15764	Cambridge-Newton-Framingham, MA Middlesex County, MA	1.1210
15804	Camden, NJ Burlington County, NJ Camden County, NJ Gloucester County, NJ	1.0202

15940	Canton-Massillon, OH Carroll County, OH Stark County, OH	0.8939
15980	Cape Coral-Fort Myers, FL Lee County, FL	0.9341
16020	Cape Girardeau-Jackson, MO-IL Alexander County, IL Bollinger County, MO Cape Girardeau County, MO	0.8672
16180	Carson City, NV Carson City, NV	1.0597
16220	Casper, WY Natrona County, WY	1.0117
16300	Cedar Rapids, IA Benton County, IA Jones County, IA Linn County, IA	0.8831
16580	Champaign-Urbana, IL Champaign County, IL Ford County, IL Piatt County, IL	0.9890
16620	Charleston, WV Boone County, WV Clay County, WV Kanawha County, WV Lincoln County, WV Putnam County, WV	0.8144
16700	Charleston-North Charleston-Summerville, SC Berkeley County, SC Charleston County, SC Dorchester County, SC	0.9063
16740	Charlotte-Gastonia-Rock Hill, NC-SC Anson County, NC Cabarrus County, NC Gaston County, NC Mecklenburg County, NC Union County, NC York County, SC	0.9321
16820	Charlottesville, VA Albemarle County, VA Fluvanna County, VA Greene County, VA Nelson County, VA Charlottesville City, VA	0.9188
16860	Chattanooga, TN-GA Catoosa County, GA Dade County, GA Walker County, GA Hamilton County, TN Marion County, TN Sequatchie County, TN	0.8740
16940	Cheyenne, WY Laramie County, WY	0.9844
16974	Chicago-Joilet-Naperville, IL Cook County, IL DeKalb County, IL DuPage County, IL Grundy County, IL Kane County, IL Kendall County, IL McHenry County, IL Will County, IL	1.0600
17020	Chico, CA Butte County, CA	1.1094
17140	Cincinnati-Middletown, OH-KY-IN Dearborn County, IN Franklin County, IN Ohio County, IN Boone County, KY Bracken County, KY Campbell County, KY Gallatin County, KY Grant County, KY Kenton County, KY Pendleton County, KY Brown County, OH Butler County, OH Clermont County, OH Hamilton County, OH Warren County, OH	0.9430

17300	Clarksville, TN-KY Christian County, KY Trigg County, KY Montgomery County, TN Stewart County, TN	0.8193
17420	Cleveland, TN Bradley County, TN Polk County, TN	0.7674
17460	Cleveland-Elyria-Mentor, OH Cuyahoga County, OH Geauga County, OH Lake County, OH Lorain County, OH Medina County, OH	0.8941
17660	Coeur d'Alene, ID Kootenai County, ID	0.9367
17780	College Station-Bryan, TX Brazos County, TX Burleson County, TX Robertson County, TX	0.9690
17820	Colorado Springs, CO El Paso County, CO Teller County, CO	0.9846
17860	Columbia, MO Boone County, MO Howard County, MO	0.8105
17900	Columbia, SC Calhoun County, SC Fairfield County, SC Kershaw County, SC Lexington County, SC Richland County, SC Saluda County, SC	0.8758
17980	Columbus, GA-AL Russell County, AL Chattahoochee County, GA Harris County, GA Marion County, GA Muscogee County, GA	0.9040
18020	Columbus, IN Bartholomew County, IN	0.9723
18140	Columbus, OH Delaware County, OH Fairfield County, OH Franklin County, OH Licking County, OH Madison County, OH Morrow County, OH Pickaway County, OH Union County, OH	0.9994
18580	Corpus Christi, TX Aransas County, TX Nueces County, TX San Patricio County, TX	0.8677
18700	Corvallis, OR Benton County, OR	1.0898
18880	Crestview-Fort Walton Beach-Destin, FL Okaloosa County, FL	0.8961
19060	Cumberland, MD-WV Allegany County, MD Mineral County, WV	0.7825
19124	Dallas-Plano-Irving, TX Collin County, TX Dallas County, TX Delta County, TX Denton County, TX Ellis County, TX Hunt County, TX Kaufman County, TX Rockwall County, TX	0.9844
19140	Dalton, GA Murray County, GA Whitfield County, GA	0.8374
19180	Danville, IL Vermilion County, IL	0.9832
19260	Danville, VA Pittsylvania County, VA Danville City, VA	0.7896
19340	Davenport-Moline-Rock Island, IA-IL Henry County, IL Mercer County, IL Rock Island County, IL Scott County, IA	0.9056

19380	Dayton, OH Greene County, OH Miami County, OH Montgomery County, OH Preble County, OH	0.9281
19460	Decatur, AL Lawrence County, AL Morgan County, AL	0.7334
19500	Decatur, IL Macon County, IL	0.8008
19660	Deltona-Daytona Beach-Ormond Beach, FL Volusia County, FL	0.8865
19740	Denver-Aurora-Broomfield, CO Adams County, CO Arapahoe County, CO Broomfield County, CO Clear Creek County, CO Denver County, CO Douglas County, CO Elbert County, CO Gilpin County, CO Jefferson County, CO Park County, CO	1.0647
19780	Des Moines-West Des Moines, IA Dallas County, IA Guthrie County, IA Madison County, IA Polk County, IA Warren County, IA	0.9801
19804	Detroit-Livonia-Dearborn, MI Wayne County, MI	0.9511
20020	Dothan, AL Geneva County, AL Henry County, AL Houston County, AL	0.7130
20100	Dover, DE Kent County, DE	0.9909
20220	Dubuque, IA Dubuque County, IA	0.8698
20260	Duluth, MN-WI Carlton County, MN St. Louis County, MN Douglas County, WI	1.0335
20500	Durham-Chapel Hill, NC Chatham County, NC Durham County, NC Orange County, NC Person County, NC	0.9699
20740	Eau Claire, WI Chippewa County, WI Eau Claire County, WI	0.9597
20764	Edison-New Brunswick, NJ Middlesex County, NJ Monmouth County, NJ Ocean County, NJ Somerset County, NJ	1.0868
20940	El Centro, CA Imperial County, CA	0.9601
21060	Elizabethtown, KY Hardin County, KY Larue County, KY	0.8719
21140	Elkhart-Goshen, IN Elkhart County, IN	0.9405
21300	Elmira, NY Chemung County, NY	0.8522
21340	El Paso, TX El Paso County, TX	0.8515
21500	Erie, PA Erie County, PA	0.8147
21660	Eugene-Springfield, OR Lane County, OR	1.1587
21780	Evansville, IN-KY Gibson County, IN Posey County, IN Vanderburgh County, IN Warrick County, IN Henderson County, KY Webster County, KY	0.8679

21820	Fairbanks, AK Fairbanks North Star Borough, AK	1.1322
21940	Fajardo, PR Ceiba Municipio, PR Fajardo Municipio, PR Luquillo Municipio, PR	0.3823
22020	Fargo, ND-MN Cass County, ND Clay County, MN	0.8136
22140	Farmington, NM San Juan County, NM	0.9795
22180	Fayetteville, NC Cumberland County, NC Hoke County, NC	0.9213
22220	Fayetteville-Springdale-Rogers, AR-MO Benton County, AR Madison County, AR Washington County, AR McDonald County, MO	0.9263
22380	Flagstaff, AZ Coconino County, AZ	1.2427
22420	Flint, MI Genesee County, MI	1.1137
22500	Florence, SC Darlington County, SC Florence County, SC	0.8217
22520	Florence-Muscle Shoals, AL Colbert County, AL Lauderdale County, AL	0.7738
22540	Fond du Lac, WI Fond du Lac County, WI	0.9291
22660	Fort Collins-Loveland, CO Larimer County, CO	0.9876
22744	Fort Lauderdale-Pompano Beach-Deerfield, FL Broward County, FL	1.0160
22900	Fort Smith, AR-OK Crawford County, AR Franklin County, AR Sebastian County, AR Le Flore County, OK Sequoyah County, OK	0.7620
23060	Fort Wayne, IN Allen County, IN Wells County, IN Whitley County, IN	0.9368
23104	Fort Worth-Arlington, TX Johnson County, TX Parker County, TX Tarrant County, TX Wise County, TX	0.9525
23420	Fresno, CA Fresno County, CA	1.1281
23460	Gadsden, AL Etowah County, AL	0.7934
23540	Gainesville, FL Alachua County, FL Gilchrist County, FL	0.9375
23580	Gainesville, GA Hall County, GA	0.9010
23844	Gary, IN Jasper County, IN Lake County, IN Newton County, IN Porter County, IN	0.9193
24020	Glens Falls, NY Warren County, NY Washington County, NY	0.8504
24140	Goldsboro, NC Wayne County, NC	0.8690
24220	Grand Forks, ND-MN Polk County, MN Grand Forks County, ND	0.7573
24300	Grand Junction, CO Mesa County, CO	0.9394

24340	Grand Rapids-Wyoming, MI Barry County, MI Ionia County, MI Kent County, MI Newaygo County, MI	0.9145
24500	Great Falls, MT Cascade County, MT	0.8462
24540	Greeley, CO Weld County, CO	0.9553
24580	Green Bay, WI Brown County, WI Kewaunee County, WI Oconto County, WI	0.9824
24660	Greensboro-High Point, NC Guilford County, NC Randolph County, NC Rockingham County, NC	0.8798
24780	Greenville, NC Greene County, NC Pitt County, NC	0.9637
24860	Greenville-Mauldin-Easley, SC Greenville County, SC Laurens County, SC Pickens County, SC	0.9620
25020	Guayama, PR Arroyo Municipio, PR Guayama Municipio, PR Patillas Municipio, PR	0.3730
25060	Gulfport-Biloxi, MS Hancock County, MS Harrison County, MS Stone County, MS	0.8505
25180	Hagerstown-Martinsburg, MD-WV Washington County, MD Berkeley County, WV Morgan County, WV	0.9168
25260	Hanford-Corcoran, CA Kings County, CA	1.0700
25420	Harrisburg-Carlisle, PA Cumberland County, PA Dauphin County, PA Perry County, PA	0.9400
25500	Harrisonburg, VA Rockingham County, VA Harrisonburg City, VA	0.8773
25540	Hartford-West Hartford-East Hartford, CT Hartford County, CT Middlesex County, CT Tolland County, CT	1.0700
25620	Hattiesburg, MS Forrest County, MS Lamar County, MS Perry County, MS	0.7940
25860	Hickory-Lenoir-Morganton, NC Alexander County, NC Burke County, NC Caldwell County, NC Catawba County, NC	0.8859
25980	Hinesville-Fort Stewart, GA[1] Liberty County, GA Long County, GA	0.8926
26100	Holland-Grand Haven, MI Ottawa County, MI	0.8523
26180	Honolulu, HI Honolulu County, HI	1.1698
26300	Hot Springs, AR Garland County, AR	0.9076
26380	Houma-Bayou Cane-Thibodaux, LA Lafourche Parish, LA Terrebonne Parish, LA	0.7841
26420	Houston-Sugar Land-Baytown, TX Austin County, TX Brazoria County, TX Chambers County, TX Fort Bend County, TX Galveston County, TX Harris County, TX Liberty County, TX Montgomery County, TX San Jacinto County, TX Waller County, TX	0.9945

26580	Huntington-Ashland, WV-KY-OH Boyd County, KY Greenup County, KY Lawrence County, OH Cabell County, WV Wayne County, WV	0.8893
26620	Huntsville, AL Limestone County, AL Madison County, AL	0.8996
26820	Idaho Falls, ID Bonneville County, ID Jefferson County, ID	0.9336
26900	Indianapolis-Carmel, IN Boone County, IN Brown County, IN Hamilton County, IN Hancock County, IN Hendricks County, IN Johnson County, IN Marion County, IN Morgan County, IN Putnam County, IN Shelby County, IN	0.9662
26980	Iowa City, IA Johnson County, IA Washington County, IA	1.0070
27060	Ithaca, NY Tompkins County, NY	0.8819
27100	Jackson, MI Jackson County, MI	0.8938
27140	Jackson, MS Copiah County, MS Hinds County, MS Madison County, MS Rankin County, MS Simpson County, MS	0.8172
27180	Jackson, TN Chester County, TN Madison County, TN	0.8149
27260	Jacksonville, FL Baker County, FL Clay County, FL Duval County, FL Nassau County, FL St. Johns County, FL	0.8882
27340	Jacksonville, NC Onslow County, NC	0.8074
27500	Janesville, WI Rock County, WI	0.9234
27620	Jefferson City, MO Callaway County, MO Cole County, MO Moniteau County, MO Osage County, MO	0.8222
27740	Johnson City, TN Carter County, TN Unicoi County, TN Washington County, TN	0.7796
27780	Johnstown, PA Cambria County, PA	0.8715
27860	Jonesboro, AR Craighead County, AR Poinsett County, AR	0.7718
27900	Joplin, MO Jasper County, MO Newton County, MO	0.8227
28020	Kalamazoo-Portage, MI Kalamazoo County, MI Van Buren County, MI	0.9939
28100	Kankakee-Bradley, IL Kankakee County, IL	0.9807

28140	Kansas City, MO-KS Franklin County, KS Johnson County, KS Leavenworth County, KS Linn County, KS Miami County, KS Wyandotte County, KS Bates County, MO Caldwell County, MO Cass County, MO Clay County, MO Clinton County, MO Jackson County, MO Lafayette County, MO Platte County, MO Ray County, MO	0.9637
28420	Kennewick-Pasco-Richland, WA Benton County, WA Franklin County, WA	0.9582
28660	Killeen-Temple-Fort Hood, TX Bell County, TX Coryell County, TX Lampasas County, TX	0.9501
28700	Kingsport-Bristol-Bristol, TN-VA Hawkins County, TN Sullivan County, TN Bristol City, VA Scott County, VA Washington County, VA	0.7399
28740	Kingston, NY Ulster County, NY	0.9170
28940	Knoxville, TN Anderson County, TN Blount County, TN Knox County, TN Loudon County, TN Union County, TN	0.7838
29020	Kokomo, IN Howard County, IN Tipton County, IN	0.9186
29100	La Crosse, WI-MN Houston County, MN La Crosse County, WI	0.9685
29140	Lafayette, IN Benton County, IN Carroll County, IN Tippecanoe County, IN	0.9507
29180	Lafayette, LA Lafayette Parish, LA St. Martin Parish, LA	0.8319
29340	Lake Charles, LA Calcasieu Parish, LA Cameron Parish, LA	0.7998
29404	Lake County-Kenosha County, IL-WI Lake County, IL Kenosha County, WI	1.0311
29420	Lake Havasu City-Kingman, AZ Mohave County, AZ	0.9967
29460	Lakeland-Winter Haven, FL Polk County, FL	0.8432
29540	Lancaster, PA Lancaster County, PA	0.9439
29620	Lansing-East Lansing, MI Clinton County, MI Eaton County, MI Ingham County, MI	1.0477
29700	Laredo, TX Webb County, TX	0.7730
29740	Las Cruces, NM Dona Ana County, NM	0.9106
29820	Las Vegas-Paradise, NV Clark County, NV	1.2050
29940	Lawrence, KS Douglas County, KS	0.8853
30020	Lawton, OK Comanche County, OK	0.8545
30140	Lebanon, PA Lebanon County, PA	0.8042
30300	Lewiston, ID-WA Nez Perce County, ID Asotin County, WA	0.9067

30340	Lewiston-Auburn, ME Androscoggin County, ME	0.9038
30460	Lexington-Fayette, KY Bourbon County, KY Clark County, KY Fayette County, KY Jessamine County, KY Scott County, KY Woodford County, KY	0.8833
30620	Lima, OH Allen County, OH	0.9371
30700	Lincoln, NE Lancaster County, NE Seward County, NE	0.9612
30780	Little Rock-North Little Rock-Conway, AR Faulkner County, AR Grant County, AR Lonoke County, AR Perry County, AR Pulaski County, AR Saline County, AR	0.8558
30860	Logan, UT-ID Franklin County, ID Cache County, UT	0.8592
30980	Longview, TX Gregg County, TX Rusk County, TX Upshur County, TX	0.8530
31020	Longview, WA Cowlitz County, WA	0.9989
31084	Los Angeles-Long Beach-Santa Ana, CA Los Angeles County, CA	1.2287
31140	Louisville-Jefferson County, KY-IN Clark County, IN Floyd County, IN Harrison County, IN Washington County, IN Bullitt County, KY Henry County, KY Meade County, KY Nelson County, KY Oldham County, KY Shelby County, KY Spencer County, KY Trimble County, KY	0.8900
31180	Lubbock, TX Crosby County, TX Lubbock County, TX	0.8794
31340	Lynchburg, VA Amherst County, VA Appomattox County, VA Bedford County, VA Campbell County, VA Bedford City, VA Lynchburg City, VA	0.8768
31420	Macon, GA Bibb County, GA Crawford County, GA Jones County, GA Monroe County, GA Twiggs County, GA	0.9122
31460	Madera-Chowchilla, CA Madera County, CA	0.8114
31540	Madison, WI Columbia County, WI Dane County, WI Iowa County, WI	1.1234
31700	Manchester-Nashua, NH Hillsborough County, NH	1.0083
31740	Manhattan, KS Geary County, KS Pottawatomie County, KS Riley County, KS	0.7912

31860	Mankato-North Mankato, MN Blue Earth County, MN Nicollet County, MN	0.9346
31900	Mansfield, OH Richland County, OH	0.9215
32420	Mayagüez, PR Hormigueros Municipio, PR Mayagüez Municipio, PR	0.3676
32580	McAllen-Edinburg-Mission, TX Hidalgo County, TX	0.8878
32780	Medford, OR Jackson County, OR	1.0318
32820	Memphis, TN-MS-AR Crittenden County, AR DeSoto County, MS Marshall County, MS Tate County, MS Tunica County, MS Fayette County, TN Shelby County, TN Tipton County, TN	0.9275
32900	Merced, CA Merced County, CA	1.2424
33124	Miami-Miami Beach-Kendall, FL Miami-Dade County, FL	1.0085
33140	Michigan City-La Porte, IN LaPorte County, IN	0.9358
33260	Midland, TX Midland County, TX	1.0514
33340	Milwaukee-Waukesha-West Allis, WI Milwaukee County, WI Ozaukee County, WI Washington County, WI Waukesha County, WI	0.9961
33460	Minneapolis-St. Paul-Bloomington, MN-WI Anoka County, MN Carver County, MN Chisago County, MN Dakota County, MN Hennepin County, MN Isanti County, MN Ramsey County, MN Scott County, MN Sherburne County, MN Washington County, MN Wright County, MN Pierce County, WI St. Croix County, WI	1.1105
33540	Missoula, MT Missoula County, MT	0.9154
33660	Mobile, AL Mobile County, AL	0.8002
33700	Modesto, CA Stanislaus County, CA	1.2670
33740	Monroe, LA Ouachita Parish, LA Union Parish, LA	0.7915
33780	Monroe, MI Monroe County, MI	0.8727
33860	Montgomery, AL Autauga County, AL Elmore County, AL Lowndes County, AL Montgomery County, AL	0.8103
34060	Morgantown, WV Monongalia County, WV Preston County, WV	0.8197
34100	Morristown, TN Grainger County, TN Hamblen County, TN Jefferson County, TN	0.7031
34580	Mount Vernon-Anacortes, WA Skagit County, WA	1.0235
34620	Muncie, IN Delaware County, IN	0.7817

34740	Muskegon-Norton Shores, MI Muskegon County, MI	0.9967
34820	Myrtle Beach-North Myrtle Beach-Conway, SC Horry County, SC	0.8653
34900	Napa, CA Napa County, CA	1.4511
34940	Naples-Marco Island, FL Collier County, FL	0.9740
34980	Nashville-Davidson-Murfreesboro-Franklin, TN Cannon County, TN Cheatham County, TN Davidson County, TN Dickson County, TN Hickman County, TN Macon County, TN Robertson County, TN Rutherford County, TN Smith County, TN Sumner County, TN Trousdale County, TN Williamson County, TN Wilson County, TN	0.9340
35004	Nassau-Suffolk, NY Nassau County, NY Suffolk County, NY	1.2416
35084	Newark-Union, NJ-PA Essex County, NJ Hunterdon County, NJ Morris County, NJ Sussex County, NJ Union County, NJ Pike County, PA	1.1322
35300	New Haven-Milford, CT New Haven County, CT	1.1556
35380	New Orleans-Metairie-Kenner, LA Jefferson Parish, LA Orleans Parish, LA Plaquemines Parish, LA St. Bernard Parish, LA St. Charles Parish, LA St. John the Baptist Parish, LA St. Tammany Parish, LA	0.9026
35644	New York-White Plains-Wayne, NY-NJ Bergen County, NJ Hudson County, NJ Passaic County, NJ Bronx County, NY Kings County, NY New York County, NY Putnam County, NY Queens County, NY Richmond County, NY Rockland County, NY Westchester County, NY	1.3052
35660	Niles-Benton Harbor, MI Berrien County, MI	0.8653
35840	North Port-Bradenton-Sarasota, FL Manatee County, FL Sarasota County, FL	0.9435
35980	Norwich-New London, CT New London County, CT	1.1227
36084	Oakland-Fremont-Hayward, CA Alameda County, CA Contra Costa County, CA	1.6080
36100	Ocala, FL Marion County, FL	0.8449
36140	Ocean City, NJ Cape May County, NJ	1.0641
36220	Odessa, TX Ector County, TX	0.9809
36260	Ogden-Clearfield, UT Davis County, UT Morgan County, UT Weber County, UT	0.9220
36420	Oklahoma City, OK Canadian County, OK Cleveland County, OK Grady County, OK Lincoln County, OK Logan County, OK McClain County, OK Oklahoma County, OK	0.8934

36500	Olympia, WA Thurston County, WA	1.1339
36540	Omaha-Council Bluffs, NE-IA Harrison County, IA Mills County, IA Pottawattamie County, IA Cass County, NE Douglas County, NE Sarpy County, NE Saunders County, NE Washington County, NE	0.9864
36740	Orlando-Kissimmee-Sanford, FL Lake County, FL Orange County, FL Osceola County, FL Seminole County, FL	0.9128
36780	Oshkosh-Neenah, WI Winnebago County, WI	0.9319
36980	Owensboro, KY Daviess County, KY Hancock County, KY McLean County, KY	0.8202
37100	Oxnard-Thousand Oaks-Ventura, CA Ventura County, CA	1.2830
37340	Palm Bay-Melbourne-Titusville, FL Brevard County, FL	0.9042
37380	Palm Coast, FL Flagler County, FL	0.9373
37460	Panama City-Lynn Haven-Panama City Beach, FL Bay County, FL	0.8388
37620	Parkersburg-Marietta-Vienna, WV-OH Washington County, OH Pleasants County, WV Wirt County, WV Wood County, WV	0.7647
37700	Pascagoula, MS George County, MS Jackson County, MS	0.7885
37764	Peabody, MA Essex County, MA	1.0698
37860	Pensacola-Ferry Pass-Brent, FL Escambia County, FL Santa Rosa County, FL	0.8013
37900	Peoria, IL Marshall County, IL Peoria County, IL Stark County, IL Tazewell County, IL Woodford County, IL	0.8830
37964	Philadelphia, PA Bucks County, PA Chester County, PA Delaware County, PA Montgomery County, PA Philadelphia County, PA	1.0760
38060	Phoenix-Mesa-Glendale, AZ Maricopa County, AZ Pinal County, AZ	1.0566
38220	Pine Bluff, AR Cleveland County, AR Jefferson County, AR Lincoln County, AR	0.7700
38300	Pittsburgh, PA Allegheny County, PA Armstrong County, PA Beaver County, PA Butler County, PA Fayette County, PA Washington County, PA Westmoreland County, PA	0.8669
38340	Pittsfield, MA Berkshire County, MA	1.0616
38540	Pocatello, ID Bannock County, ID Power County, ID	0.9426
38660	Ponce, PR Juana Díaz Municipio, PR Ponce Municipio, PR Villalba Municipio, PR	0.4185
38860	Portland-South Portland-Biddeford, ME Cumberland County, ME Sagadahoc County, ME York County, ME	0.9661

38900	Portland-Vancouver-Hillsboro, OR-WA Clackamas County, OR Columbia County, OR Multnomah County, OR Washington County, OR Yamhill County, OR Clark County, WA Skamania County, WA	1.1454
38940	Port St. Lucie, FL Martin County, FL St. Lucie County, FL	0.9784
39100	Poughkeepsie-Newburgh-Middletown, NY Dutchess County, NY Orange County, NY	1.1339
39140	Prescott, AZ Yavapai County, AZ	1.2261
39300	Providence-New Bedford-Fall River, RI-MA Bristol County, MA Bristol County, RI Kent County, RI Newport County, RI Providence County, RI Washington County, RI	1.0639
39340	Provo-Orem, UT Juab County, UT Utah County, UT	0.9404
39380	Pueblo, CO Pueblo County, CO	0.8668
39460	Punta Gorda, FL Charlotte County, FL	0.8801
39540	Racine, WI Racine County, WI	0.8630
39580	Raleigh-Cary, NC Franklin County, NC Johnston County, NC Wake County, NC	0.9648
39660	Rapid City, SD Meade County, SD Pennington County, SD	1.0203
39740	Reading, PA Berks County, PA	0.9212
39820	Redding, CA Shasta County, CA	1.5584
39900	Reno-Sparks, NV Storey County, NV Washoe County, NV	1.0596
40060	Richmond, VA Amelia County, VA Caroline County, VA Charles City County, VA Chesterfield County, VA Cumberland County, VA Dinwiddie County, VA Goochland County, VA Hanover County, VA Henrico County, VA King and Queen County, VA King William County, VA Louisa County, VA New Kent County, VA Powhatan County, VA Prince George County, VA Sussex County, VA Colonial Heights City, VA Hopewell City, VA Petersburg City, VA Richmond City, VA	0.9791
40140	Riverside-San Bernardino-Ontario, CA Riverside County, CA San Bernardino County, CA	1.1463
40220	Roanoke, VA Botetourt County, VA Craig County, VA Franklin County, VA Roanoke County, VA Roanoke City, VA Salem City, VA	0.9166
40340	Rochester, MN Dodge County, MN Olmsted County, MN Wabasha County, MN	1.0802

40380	Rochester, NY Livingston County, NY Monroe County, NY Ontario County, NY Orleans County, NY Wayne County, NY	0.8602
40420	Rockford, IL Boone County, IL Winnebago County, IL	0.9938
40484	Rockingham County-Strafford County, NH Rockingham County, NH Strafford County, NH	1.0185
40580	Rocky Mount, NC Edgecombe County, NC Nash County, NC	0.9018
40660	Rome, GA Floyd County, GA	0.8838
40900	Sacramento-Arden-Arcade-Roseville, CA El Dorado County, CA Placer County, CA Sacramento County, CA Yolo County, CA	1.3777
40980	Saginaw-Saginaw Township North, MI Saginaw County, MI	0.8512
41060	St. Cloud, MN Benton County, MN Stearns County, MN	1.0724
41100	St. George, UT Washington County, UT	0.9070
41140	St. Joseph, MO-KS Doniphan County, KS Andrew County, MO Buchanan County, MO DeKalb County, MO	1.0255
41180	St. Louis, MO-IL Bond County, IL Calhoun County, IL Clinton County, IL Jersey County, IL Macoupin County, IL Madison County, IL Monroe County, IL St. Clair County, IL Crawford County, MO Franklin County, MO Jefferson County, MO Lincoln County, MO St. Charles County, MO St. Louis County, MO Warren County, MO Washington County, MO St. Louis City, MO	0.9165
41420	Salem, OR Marion County, OR Polk County, OR	1.1224
41500	Salinas, CA Monterey County, CA	1.5604
41540	Salisbury, MD Somerset County, MD Wicomico County, MD	0.9227
41620	Salt Lake City, UT Salt Lake County, UT Summit County, UT Tooele County, UT	0.9415
41660	San Angelo, TX Irion County, TX Tom Green County, TX	0.8273
41700	San Antonio-New Braunfels, TX Atascosa County, TX Bandera County, TX Bexar County, TX Comal County, TX Guadalupe County, TX Kendall County, TX Medina County, TX Wilson County, TX	0.9006

41740	San Diego-Carlsbad-San Marcos, CA San Diego County, CA	1.1950
41780	Sandusky, OH Erie County, OH	0.8167
41884	San Francisco-San Mateo-Redwood City, CA Marin County, CA San Francisco County, CA San Mateo County, CA	1.5904
41900	San Germán-Cabo Rojo, PR Cabo Rojo Municipio, PR Lajas Municipio, PR Sabana Grande Municipio, PR San Germán Municipio, PR	0.4612
41940	San Jose-Sunnyvale-Santa Clara, CA San Benito County, CA Santa Clara County, CA	1.6878
41980	San Juan-Caguas-Guaynabo, PR Aguas Buenas Municipio, PR Aibonito Municipio, PR Arecibo Municipio, PR Barceloneta Municipio, PR Barranquitas Municipio, PR Bayamón Municipio, PR Caguas Municipio, PR Camuy Municipio, PR Canóvanas Municipio, PR Carolina Municipio, PR Cataño Municipio, PR Cayey Municipio, PR Ciales Municipio, PR Cidra Municipio, PR Comerío Municipio, PR Corozal Municipio, PR Dorado Municipio, PR Florida Municipio, PR Guaynabo Municipio, PR Gurabo Municipio, PR Hatillo Municipio, PR Humacao Municipio, PR Juncos Municipio, PR Las Piedras Municipio, PR Loíza Municipio, PR Manatí Municipio, PR Maunabo Municipio, PR Morovis Municipio, PR Naguabo Municipio, PR Naranjito Municipio, PR Orocovis Municipio, PR Quebradillas Municipio, PR Río Grande Municipio, PR San Juan Municipio, PR San Lorenzo Municipio, PR Toa Alta Municipio, PR Toa Baja Municipio, PR Trujillo Alto Municipio, PR Vega Alta Municipio, PR Vega Baja Municipio, PR Yabucoa Municipio, PR	0.4340
42020	San Luis Obispo-Paso Robles, CA San Luis Obispo County, CA	1.3072

42044	Santa Ana-Anaheim-Irvine, CA Orange County, CA	1.2042
42060	Santa Barbara-Santa Maria-Goleta, CA Santa Barbara County, CA	1.2246
42100	Santa Cruz-Watsonville, CA Santa Cruz County, CA	1.7111
42140	Santa Fe, NM Santa Fe County, NM	1.0660
42220	Santa Rosa-Petaluma, CA Sonoma County, CA	1.6102
42340	Savannah, GA Bryan County, GA Chatham County, GA Effingham County, GA	0.9095
42540	Scranton--Wilkes-Barre, PA Lackawanna County, PA Luzerne County, PA Wyoming County, PA	0.8328
42644	Seattle-Bellevue-Everett, WA King County, WA Snohomish County, WA	1.1541
42680	Sebastian-Vero Beach, FL Indian River County, FL	0.9032
43100	Sheboygan, WI Sheboygan County, WI	0.9303
43300	Sherman-Denison, TX Grayson County, TX	0.8011
43340	Shreveport-Bossier City, LA Bossier Parish, LA Caddo Parish, LA De Soto Parish, LA	0.8505
43580	Sioux City, IA-NE-SD Woodbury County, IA Dakota County, NE Dixon County, NE Union County, SD	0.9538
43620	Sioux Falls, SD Lincoln County, SD McCook County, SD Minnehaha County, SD Turner County, SD	0.9153
43780	South Bend-Mishawaka, IN-MI St. Joseph County, IN Cass County, MI	0.9426
43900	Spartanburg, SC Spartanburg County, SC	0.9325
44060	Spokane, WA Spokane County, WA	1.0504
44100	Springfield, IL Menard County, IL Sangamon County, IL	0.8958
44140	Springfield, MA Franklin County, MA Hampden County, MA Hampshire County, MA	1.0247
44180	Springfield, MO Christian County, MO Dallas County, MO Greene County, MO Polk County, MO Webster County, MO	0.8680
44220	Springfield, OH Clark County, OH	0.8981
44300	State College, PA Centre County, PA	0.9251
44600	Steubenville-Weirton, OH-WV Jefferson County, OH Brooke County, WV Hancock County, WV	0.7054
44700	Stockton, CA San Joaquin County, CA	1.3052
44940	Sumter, SC Sumter County, SC	0.7551
45060	Syracuse, NY Madison County, NY Onondaga County, NY Oswego County, NY	0.9776

45104	Tacoma, WA Pierce County, WA	1.1384
45220	Tallahassee, FL Gadsden County, FL Jefferson County, FL Leon County, FL Wakulla County, FL	0.8593
45300	Tampa-St. Petersburg-Clearwater, FL Hernando County, FL Hillsborough County, FL Pasco County, FL Pinellas County, FL	0.9072
45460	Terre Haute, IN Clay County, IN Sullivan County, IN Vermillion County, IN Vigo County, IN	0.9209
45500	Texarkana, TX-Texarkana, AR Miller County, AR Bowie County, TX	0.7937
45780	Toledo, OH Fulton County, OH Lucas County, OH Ottawa County, OH Wood County, OH	0.9148
45820	Topeka, KS Jackson County, KS Jefferson County, KS Osage County, KS Shawnee County, KS Wabaunsee County, KS	0.8818
45940	Trenton-Ewing, NJ Mercer County, NJ	1.0062
46060	Tucson, AZ Pima County, AZ	0.9318
46140	Tulsa, OK Creek County, OK Okmulgee County, OK Osage County, OK Pawnee County, OK Rogers County, OK Tulsa County, OK Wagoner County, OK	0.8362
46220	Tuscaloosa, AL Greene County, AL Hale County, AL Tuscaloosa County, AL	0.8664
46340	Tyler, TX Smith County, TX	0.8335
46540	Utica-Rome, NY Herkimer County, NY Oneida County, NY	0.8441
46660	Valdosta, GA Brooks County, GA Echols County, GA Lanier County, GA Lowndes County, GA	0.7997
46700	Vallejo-Fairfield, CA Solano County, CA	1.4636
47020	Victoria, TX Calhoun County, TX Goliad County, TX Victoria County, TX	0.8434
47220	Vineland-Millville-Bridgeton, NJ Cumberland County, NJ	1.0222

47260	Virginia Beach-Norfolk-Newport News, VA-NC Currituck County, NC Gloucester County, VA Isle of Wight County, VA James City County, VA Mathews County, VA Surry County, VA York County, VA Chesapeake City, VA Hampton City, VA Newport News City, VA Norfolk City, VA Poquoson City, VA Portsmouth City, VA Suffolk City, VA Virginia Beach City, VA Williamsburg City, VA	0.9001
47300	Visalia-Porterville, CA Tulare County, CA	1.0343
47380	Waco, TX McLennan County, TX	0.8559
47580	Warner Robins, GA Houston County, GA	0.8245
47644	Warren-Troy-Farmington Hills, MI Lapeer County, MI Livingston County, MI Macomb County, MI Oakland County, MI St. Clair County, MI	0.9625
47894	Washington-Arlington-Alexandria, DC-VA-MD-WV District of Columbia, DC Calvert County, MD Charles County, MD Prince George's County, MD Arlington County, VA Clarke County, VA Fairfax County, VA Fauquier County, VA Loudoun County, VA Prince William County, VA Spotsylvania County, VA Stafford County, VA Warren County, VA Alexandria City, VA Fairfax City, VA Falls Church City, VA Fredericksburg City, VA Manassas City, VA Manassas Park City, VA Jefferson County, WV	1.0807
47940	Waterloo-Cedar Falls, IA Black Hawk County, IA Bremer County, IA Grundy County, IA	0.8372
48140	Wausau, WI Marathon County, WI	0.8962
48300	Wenatchee-East Wenatchee, WA Chelan County, WA Douglas County, WA	1.0168
48424	West Palm Beach-Boca Raton-Boynton Beach, FL Palm Beach County, FL	0.9823
48540	Wheeling, WV-OH Belmont County, OH Marshall County, WV Ohio County, WV	0.6735
48620	Wichita, KS Butler County, KS Harvey County, KS Sedgwick County, KS Sumner County, KS	0.8696

48660	Wichita Falls, TX Archer County, TX Clay County, TX Wichita County, TX	1.0097
48700	Williamsport, PA Lycoming County, PA	0.8084
48864	Wilmington, DE-MD-NJ New Castle County, DE Cecil County, MD Salem County, NJ	1.0662
48900	Wilmington, NC Brunswick County, NC New Hanover County, NC Pender County, NC	0.9107
49020	Winchester, VA-WV Frederick County, VA Winchester City, VA Hampshire County, WV	0.9106
49180	Winston-Salem, NC Davie County, NC Forsyth County, NC Stokes County, NC Yadkin County, NC	0.8343
49340	Worcester, MA Worcester County, MA	1.1076
49420	Yakima, WA Yakima County, WA	1.0433
49500	Yauco, PR Guánica Municipio, PR Guayanilla Municipio, PR Peñuelas Municipio, PR Yauco Municipio, PR	0.3757
49620	York-Hanover, PA York County, PA	0.9675
49660	Youngstown-Warren-Boardman, OH-PA Mahoning County, OH Trumbull County, OH Mercer County, PA	0.8328
49700	Yuba City, CA Sutter County, CA Yuba County, CA	1.1808
49740	Yuma, AZ Yuma County, AZ	0.9350

[1] At this time, there are no hospitals located in this urban area on which to base a wage index.

TABLE B: FY 2012 WAGE INDEX BASED ON CBSA LABOR MARKET AREAS FOR RURAL AREAS

State Code	Nonurban Area	Wage Index
1	Alabama	0.7260
2	Alaska	1.2846
3	Arizona	0.8826
4	Arkansas	0.7194
5	California	1.2194
6	Colorado	1.0126
7	Connecticut	1.1287
8	Delaware	1.0008
10	Florida	0.8361
11	Georgia	0.7547
12	Hawaii	1.1200
13	Idaho	0.7531
14	Illinois	0.8426
15	Indiana	0.8551
16	Iowa	0.8618
17	Kansas	0.8041
18	Kentucky	0.7825
19	Louisiana	0.7769
20	Maine	0.8581
21	Maryland	0.9291
22	Massachusetts	1.3962
23	Michigan	0.8295
24	Minnesota	0.9107
25	Mississippi	0.7539
26	Missouri	0.7673
27	Montana	0.8615

State Code	Nonurban Area	Wage Index
28	Nebraska	0.8872
29	Nevada	0.9637
30	New Hampshire	1.0441
31	New Jersey[1]	-----
32	New Mexico	0.8878
33	New York	0.8152
34	North Carolina	0.8288
35	North Dakota	0.7295
36	Ohio	0.8455
37	Oklahoma	0.7848
38	Oregon	1.0337
39	Pennsylvania	0.8450
40	Puerto Rico[1]	0.4047
41	Rhode Island[1]	-----
42	South Carolina	0.8277
43	South Dakota	0.8300
44	Tennessee	0.7734
45	Texas	0.7934
46	Utah	0.8719
47	Vermont	0.9709
48	Virgin Islands	0.7505
49	Virginia	0.7817
50	Washington	1.0231
51	West Virginia	0.7371
52	Wisconsin	0.8977
53	Wyoming	0.9433
65	Guam	0.9611

[1] All counties within the State are classified as urban, with the exception of Puerto Rico. Puerto Rico has areas designated as rural; however, no short-term, acute care hospitals are located in the area(s) for FY 2012. The Puerto Rico wage index is the same as FY 2011.

[FR Doc. 2011–19544 Filed 7–29–11; 4:15 pm]

BILLING CODE 4120–01–C

FEDERAL REGISTER

Vol. 76 Monday,

No. 152 August 8, 2011

Part IV

Department of Health and Human Services

Centers for Medicare and Medicaid Services

Medicare and Medicaid Programs; Quarterly Listing of Program Issuances–January Through March 2011 and Proposal for Future Notices; Notice

DEPARTMENT OF HEALTH AND HUMAN SERVICES

Centers for Medicare & Medicaid Services

[CMS–9066–NC]

Medicare and Medicaid Programs; Quarterly Listing of Program Issuances—January Through March 2011 and Proposal for Future Notices

AGENCY: Centers for Medicare & Medicaid Services (CMS), HHS.

ACTION: Notice with comment period.

SUMMARY: This quarterly notice lists CMS manual instructions, substantive and interpretive regulations, and other **Federal Register** notices that were published from January through March 2011, relating to the Medicare and Medicaid programs and other programs administered by CMS. It also solicits comments on a process that CMS is considering to provide current up-to-date information in a Web friendly format. We are soliciting feedback on options that would improve accessibility and be less burdensome to beneficiaries, providers, and suppliers.

DATES: To be assured consideration, comments must be received at one of the addresses provided below, no later than 5 p.m. on September 7, 2011.

ADDRESSES: In commenting, please refer to file code CMS–9066–NC. Because of staff and resource limitations, we cannot accept comments by facsimile (FAX) transmission.

You may submit comments in one of four ways (please choose only one of the ways listed):

1. *Electronically.* You may submit electronic comments on this regulation to *http://www.regulations.gov.* Follow the ''Submit a comment'' instructions.

2. *By regular mail.* You may mail written comments to the following address only: Centers for Medicare & Medicaid Services, Department of Health and Human Services, Attention: CMS–9066–NC, P.O. Box 8012, Baltimore, MD 21244–1850.

Please allow sufficient time for mailed comments to be received before the close of the comment period.

3. *By express or overnight mail.* You may send written comments to the following address only: Centers for Medicare & Medicaid Services, Department of Health and Human Services, Attention: CMS–9066–NC, Mail Stop C4–26–05, 7500 Security Boulevard, Baltimore, MD 21244–1850.

4. *By hand or courier.* Alternatively, you may deliver (by hand or courier) your written comments only to the following address prior to the close of the comment period: Centers for Medicare & Medicaid Services, Department of Health and Human Services, 7500 Security Boulevard, Baltimore, MD 21244–1850.

If you intend to deliver your comments to the Baltimore address, please call telephone number (410) 786–7195 in advance to schedule your arrival with one of our staff members.

Comments erroneously mailed to the address indicated as appropriate for hand or courier delivery may be delayed and received after the comment period.

For information on viewing public comments, see the beginning of the **SUPPLEMENTARY INFORMATION** section.

SUPPLEMENTARY INFORMATION:

Inspection of Public Comments: All comments received before the close of the comment period are available for viewing by the public, including any personally identifiable or confidential business information that is included in a comment. We post all comments received before the close of the comment period on the following Web site as soon as possible after they have been received: *http://www.regulations.gov.* Follow the search instructions on that Web site to view public comments.

Comments received timely will also be available for public inspection as they are received, generally beginning approximately 3 weeks after publication of a document, at the headquarters of the Centers for Medicare & Medicaid Services, 7500 Security Boulevard, Baltimore, Maryland 21244, Monday through Friday of each week from 8:30 a.m. to 4 p.m. To schedule an appointment to view public comments, phone 1–800–743–3951.

FOR FURTHER INFORMATION CONTACT: It is possible that an interested party may need specific information and not be able to determine from the listed information whether the issuance or regulation would fulfill that need. Consequently, we are providing contact persons to answer general questions concerning each of the addenda.

Addenda	Contact	Phone number
I CMS Manual Instructions	Ismael Torres	(410) 786–1864
II Regulation Documents Published in the **Federal Register**	Terri Plumb	(410) 786–4481
III CMS Rulings	Tiffany Lafferty	(410)786–7548
IV Medicare National Coverage Determinations	Wanda Belle	(410) 786–7491
V FDA-Approved Category B IDEs	John Manlove	(410) 786–6877
VI Collections of Information	Mitch Bryman	(410) 786–5258
VII Medicare-Approved Carotid Stent Facilities	Sarah J. McClain	(410) 786–2294
VIII American College of Cardiology-National Cardiovascular Data Registry Sites.	JoAnna Baldwin, MS	(410) 786–7205
IX Medicare's Active Coverage-Related Guidance Documents	Lori Ashby	(410) 786–6322
X One-time Notices Regarding National Coverage Provisions	Lori Ashby	(410) 786–6322
XI National Oncologic Positron Emission Tomography Registry Sites	Stuart Caplan, RN, MAS	(410) 786–8564
XII Medicare-Approved Ventricular Assist Device (Destination Therapy) Facilities.	JoAnna Baldwin, MS	(410) 786–7205
XIII Medicare-Approved Lung Volume Reduction Surgery Facilities	JoAnna Baldwin, MS	(410) 786–7205
XIV Medicare-Approved Bariatric Surgery Facilities	Kate Tillman, RN, MAS	(410) 786–9252
XV Fluorodeoxyglucose Positron Emission Tomography for Dementia Trials.	Stuart Caplan, RN, MAS	(410) 786–8564
All Other Information	Annette Brewer	(410) 786–6580

Background

Among other things, the Centers for Medicare & Medicaid Services (CMS) is responsible for administering the Medicare and Medicaid programs and coordination and oversight of private health insurance. Administration and oversight of these programs involves the following: (1) Furnishing information to Medicare and Medicaid beneficiaries, health care providers, and the public; and (2) maintaining effective communications with CMS regional offices, State governments, State Medicaid agencies, State survey

agencies, various providers of health care, all Medicare contractors that process claims and pay bills, National Association of Insurance Commissioners (NAIC), health insurers, and other stakeholders. To implement the various statutes on which the programs are based, we issue regulations under the authority granted to the Secretary of the Department of Health and Human Services under sections 1102, 1871, 1902, and related provisions of the Social Security Act (the Act) and Public Health Service Act. We also issue various manuals, memoranda, and statements necessary to administer and oversee the programs efficiently.

Section 1871(c) of the Act requires that we publish a list of all Medicare manual instructions, interpretive rules, statements of policy, and guidelines of general applicability not issued as regulations at least every 3 months in the **Federal Register**. We have been announcing each quarter the most current and relevant information; however, many of the quarterly notices simply duplicate the information that was previously published, since there often are no new relevant updates in some categories for the quarter. While we plan to publish the quarterly notice required by section 1871(c) of the Act, we are proposing steps to avoid republishing duplicative information that is available to the public elsewhere. Moreover, we plan to use our Web site to provide complete and timely information with respect to certain types of Medicare providers for specific services. We believe that the Web site offers a more convenient tool for the public to find the full list of qualified providers for these specific services and offers more flexibility and ''real time''accessibility to the public.

Since the publication of our first notice on June 9, 1988, technology has advanced, and the information provided in this notice is now available in more efficient, economical, and accessible ways to meet the requirement for publication set forth in the statute. Starting with the next quarterly notice, which will publish in September 2011, we propose to provide only the specific updates that have occurred in the 3-month period along with a hyperlink to the full listing that is available on the CMS Web site or the appropriate data registries that are used as our resources. This information is the most current up-to-date information, and will be available earlier than we publish our quarterly notice. Currently, there is a 3-month lapse between the information available on the Web site and information covered by this quarterly notice. The Web site list provides more timely access for beneficiaries, providers, and suppliers. Also, many of the Web sites have listservs; that is, the public can subscribe and receive immediate notification of any updates to the Web site. These listservs avoid the need to check the Web site, as notification of updates is automatic and sent to the subscriber as they occur.

If assessing a Web site proves to be difficult, the contact person listed can provide information. We are soliciting comments as to whether this approach poses a problem to those who access the information set out in this notice. In addition, we are soliciting comments on alternative formats to provide this information to the public. For example, we could publish a notice that only provides Web links to these addenda, or we could create a CMS Quarterly Issuance Web page that provides all of the addenda. We welcome comments and any additional information as to whether these alternative processes would improve accessibility to information or pose an unintended burden to beneficiaries, providers, and suppliers.

We believe this approach is in alignment with CMS' commitment to the general principles of the President's Executive Order 13563 released January 2011entitled ''Improving Regulation and Regulatory Review,'' which promotes modifying and streamlining an agency's regulatory program to be more effective in achieving regulatory objectives. Section 6 of Executive Order 13563 requires agencies to identify regulations that may be ''outmoded, ineffective, insufficient, or excessively burdensome, and to modify, streamline, expand or repeal them in accordance with what has been learned.'' This approach is also in alignment with the President's Open Government and Transparency Initiative that establishes a system of transparency, public participation, and collaboration.

How to Use the Notice

This notice is organized so that a reader may access the subjects published during the quarter covered by the notice to determine whether any are of particular interest. We expect this notice to be used in concert with previously published notices. Those unfamiliar with a description of our Medicare manuals should view the manuals at *http://www.cms.gov/manuals.*

To aid the reader, we have organized and divided this current listing into 15 addenda.

Addendum I: Medicare and Medicaid Manual Instructions,
Addendum II: Regulation Documents Published in the **Federal Register**,
Addendum III: CMS Rulings,
Addendum IV: National Coverage Determinations,
Addendum V: FDA-Approved Category B IDEs,
Addendum VI: Approval Numbers for the Collections of Information,
Addendum VII: Medicare-Approved Carotid Stent Facilities,
Addendum VIII: American College of Cardiology's National Cardiovascular Data Registry Sites,
Addendum IX: Active CMS Coverage-Related Guidance Documents,
Addendum X: Special One-Time Notices Regarding National Coverage Provisions,
Addendum XI: National Oncologic Positron Emission Tomography Registry (NOPR) Sites,
Addendum XII: Medicare-Approved Ventricular Assist Device (Destination Therapy) Facilities,
Addendum XIII: Lung Volume Reduction Surgery,
Addendum XIV: Medicare-Approved Bariatric Surgery Facilities,
Addendum XV: FDG–PET for Dementia and Neurodegenerative Diseases Clinical Trials.

Authority: (Catalog of Federal Domestic Assistance Program No. 93.773, Medicare—Hospital Insurance, Program No. 93.774, Medicare—Supplementary Medical Insurance Program, and Program No. 93.714, Medical Assistance Program)

Dated: August 2, 2011.

Jacquelyn Y. White,

Director, Office of Strategic Operations and Regulatory Affairs.

Publication Dates for the Previous Four Quarterly Notices

We publish this notice at the end of each quarter reflecting information released by CMS during the previous quarter. The publication dates of the previous four Quarterly Listing of Program Issuances notices are: June 28, 2010 (75 FR 36786), September 24, 2010 (75 FR 58790), December 17, 2010 (75 FR 79174), and March 31, 2011 (76 FR 17873).

For the purposes of this quarterly notice, we are providing a complete listing in each addendum for the ending date of the period covered by this notice. Based on our proposal for future quarterly notices, we would provide only the specific updates that have occurred in the three-month period along with a hyperlink to the Web site to access this information and a contact person for questions or additional information.

Addendum I: Medicare and Medicaid Manual Instructions (January Through March 2011)

The CMS Manual System is used by CMS program components, partners, providers, contractors, Medicare

Advantage organizations, and State Survey Agencies to administer CMS programs. It offers day-to-day operating instructions, policies, and procedures based on statutes and regulations, guidelines, models, and directives. In 2003, we transformed the CMS Program Manuals into a Web user-friendly presentation and renamed it the CMS Online Manual System.

How To Obtain Manuals

The Internet-only Manuals (IOMs) are a replica of the Agency's official record copy. Paper-based manuals are CMS manuals that were officially released in hardcopy. The majority of these manuals were transferred into the Internet-only manual (IOM) or retired. Pub 15–1, Pub 15–2 and Pub 45 are exceptions to this rule and are still active paper-based manuals. The remaining paper-based manuals are for reference purposes only. If you notice policy contained in the paper-based manuals that was not transferred to the IOM, send a message via the CMS Feedback tool.

Those wishing to subscribe to old versions of CMS manuals should contact the National Technical Information Service, Department of Commerce, 5301 Shawnee Road, Alexandria, VA 22312 Telephone (703–605–6050). You can download copies of the listed material free of charge at: *http://cms.gov/manuals.*

How To Review Transmittals or Program Memoranda

Those wishing to review transmittals and program memoranda can access this information at a local Federal Depository Library (FDL). Under the FDL program, government publications are sent to approximately 1,400 designated libraries throughout the United States. Some FDLs may have arrangements to transfer material to a local library not designated as an FDL. Contact any library to locate the nearest FDL. This information is available at *http://www.gpo.gov/libraries/.*

In addition, individuals may contact regional depository libraries that receive and retain at least one copy of most Federal government publications, either in printed or microfilm form, for use by the general public. These libraries provide reference services and interlibrary loans; however, they are not sales outlets. Individuals may obtain information about the location of the nearest regional depository library from any library.

CMS publication and transmittal numbers are shown in the listing entitled Medicare and Medicaid Manual Instructions. To help FDLs locate the materials, use the CMS publication and transmittal numbers. For example, to find the Medicare National Coverage Determination publication titled Screening for the Human Immunodeficiency Virus (HIV) Infection Screening for the Human Immunodeficiency Virus (HIV) Infection—use CMS–Pub. 100–03, Transmittal No. 131.

Addendum I lists a unique CMS transmittal number for each instruction in our manuals or program memoranda and its subject number. A transmittal may consist of a single or multiple instruction(s). Often, it is necessary to use information in a transmittal in conjunction with information currently in the manual.

For the purposes of this quarterly notice, we list below all the manuals, subjects, publication numbers, and the corresponding transmittal numbers for the ending date of the period covered by this notice. Based on our proposal for future quarterly notices, we would continue to provide only the specific updates to the list of manual instructions that have occurred in the three-month period along with a hyperlink to the Web site to access this information and a contact person for questions or additional information.

This information is available on our Web site at *http://www.cms.gov/Manuals.* For questions or additional information, contact Ismael Torres (410–786–1864).

BILLING CODE 4120–01–P

Transmittal Number	Manual/Subject/Publication Number
	Medicare General Information (CMS-Pub. 100-01)
66	Change Request (CR) Definitions Table of Contents Review of Contractor Implementation of Change Requests Change Request (CR) Definitions Issue Date Implementation Date Effective Date Date of Service
67	April 2011 Update to the CMS Standard File for Reason Codes from the Fiscal Intermediary Shared System (FISS)
	Medicare Benefit Policy (CMS-Pub. 100-02)
136	Clarification of Existing Policy Regarding Items and Services Included Under the End Stage Renal Disease (ESRD) Composite Payment Rate Composite Rate for Outpatient Maintenance Dialysis
137	January 2011 Update of the Hospital Outpatient Prospective Payment System (OPPS) Coverage of Outpatient Diagnostic Services Furnished on or After January 1, 2010 and Before January 1, 2011 Coverage of Outpatient Diagnostic Services Furnished on or After January 1, 2011 Outpatient Diagnostic Services Under Arrangements Coverage of Outpatient Therapeutic Services Incident to a Physicians Service Furnished on or After January 1, 2010 and Before January 1, 2011 Coverage of Outpatient Therapeutic Services Incident to a Physicians Service Furnished on or After January 1, 2011 Non-Surgical Extended Duration Therapeutic Services
138	Annual Wellness Visit (AWV), Including Personalized Prevention Plan Services (PPPS) Table of Contents Annual Wellness Visit (AWV) Including Personalized Prevention Plan Services (PPPS)
139	Clarifications for Home Health Face-to-Face Encounter Provisions Table of Contents Low Utilization Payment Adjustment (LUPA) Partial Episode Payment (PEP) Adjustment Outlier Payments Discharge Issues Consolidated Billing Change of Ownership Relationship to Episodes Under PPS Content of the Plan of Care Physician Certification Content of the Physician Certification Face-to-Face Encounter Periodic Recertification
140	Expansion of Medicare Telehealth Services for CY 2011 Table of Contents Telehealth Services List of Medicare Telehealth Services Payment - Physician/Practitioner at a Distant Site Payment for Subsequent Hospital Care Services and Subsequent Nursing Facility Care Services as Telehealth Services Payment for Diabetes Self Management Training (DSMT) as a Telehealth Service
141	New Hospice Certification Requirements and Revised Conditions of Participation (CoPs) Requirements-General Timing and Content of Certification Election, Revocation, and Change of Hospice Hospice Discharge Benefit Coverage Nursing Care Medical Social Services Physicians' Services Nurse Practitioners as Attending Physicians Counseling Services Hospice Aide and Homemaker Services Physical Therapy, Occupational Therapy, and Speech-Language Pathology Other Items and Services Continuous Home Care (CHC Bereavement Counseling Contracting with Physicians Core Services Contracting for Core Services Contracting for Highly Specialized Nursing Services Waiver for Certain Core Staffing Requirements Waiver for Certain Core Nursing Services Non-core Services Payment
142	Home Health Therapy Services Observation and Assessment of the Patient's Condition When Only the Specialized Skills of a Medical Professional Can Determine Patient's Status General Principles Governing Reasonable and Necessary Physical Therapy,Speech-Language Pathology Services, and Occupational Therapy Application of the Principles to Physical Therapy Services Application of the General Principles to Speech-Language Pathology Services Assessment
	Medicare National Coverage Determination (CMS-Pub. 100-03)
130	Home Oxygen Use to Treat Cluster Headache (CH) Home Oxygen Use to Treat Cluster Headache (CH) - Effective January 4, 2011
131	Screening for the Human Immunodeficiency Virus (HIV) Infection Screening for the Human Immunodeficiency Virus (HIV) Infection

	Human Immunodeficiency Virus (HIV) Testing Diagnosis
132	Magnetic Resonance Imaging (MRI) in Medicare Beneficiaries with Implanted Permanent Pacemakers (PMs) or Implantable Cardioverter Defibrillators (ICDs) Magnetic Resonance Imaging (MRI)
Medicare Claims Processing (CMS-Pub. 100-04)	
2131	Claim Adjustment Reason Code (CARC), Remittance Advice Remark Code (RARC), and Medicare Remit Easy Print (MREP) Update
2132	2011 Durable Medical Equipment Prosthetics, Orthotics, and Supply Healthcare Common Procedure Coding System (HCPCS) Code Jurisdiction List
2133	Changes to the Laboratory National Coverage Determination (NCD) Edit Software for April 2011
2134	End Stage Renal Disease (ESRD) Prospective Payment System (PPS) and Consolidated Billing for Limited Part B Services General Description of ESRD Payment Deductible and Coinsurance Amount of payment Calculation of Case Mix Adjusted Composite Rate and Prospective Payment System Rate Determination and Publication of Composite Rate Processing Requests for Composite Rate Exceptions Pediatric Payment Model for ESRD PPS Lab Services Included in the Prospective Payment System Drugs and Biologicals Included in the Prospective Payment System Required Information for In-Facility claims Paid Under the Composite Rate and PPS Training and Retraining Coding for Adequacy of Dialysis, Vascular Access and Infection1 Lab Services Drugs Furnished in Dialysis Facilities Drugs Furnished in Dialysis Facilities Separately Billable ESRD Drugs Facilities Billing for ESRD Drugs Equivalent to Injectable Drugs Drug Payment Amounts for Facilities Blood and Blood Services Furnished in Hospital Based and Independent Dialysis Facilities Payment Amount for Epoetin Alfa (EPO) Payment for Epoetin Alfa (EPO) in Other Settings Vaccines Furnished to ESRD Patients Payment Amount for Darbepoetin Alfa (Aranesp) Payment for Darbepoetin Alfa (Aranesp) in Other Settings Payment for Home Dialysis Method Selection for Home Dialysis Payment
2135	April 2011 Quarterly Average Sales Price (ASP) Medicare Part B Drug Pricing Files and Revisions to Prior Quarterly Pricing Files
2136	Medicare and Medicaid Extenders Act of 2010 (MMEA) Extension of Reasonable Cost Payment for Clinical Lab Tests Furnished by Hospitals with Fewer Than 50 Beds in Qualified Rural Areas Method of Payment for Clinical Laboratory Tests - Place of Service Variation
2137	Certified Registered Nurse Anesthetist (CRNA) Services in a Method II Critical Access Hospital (CAH) Without a CRNA Pass-Through Exemption
2138	Modifications to the Common Working File (CWF) Logic In Support of the National Coordination of Benefits Agreement (COBA) Crossover Process Consolidated Claims Crossover Process Claims Crossover Disposition and Coordination of Benefits Agreement By-Pass Indicators
2139	Issued to a specific audience, not posted to Internet/Intranet due to Confidentiality of Instruction
2140	Changes to the Time Limits for Filing Medicare Fee-For-Service Claims
2141	January 2011 Update of the Hospital Outpatient Prospective Payment System (OPPS) Table of Contents Composite APCs OPPS Coinsurance Transitional Outpatient Payments (TOPs) for CY 2010 TOPs Overpayments Critical Care Services Inpatient-only Services Coding and Payment for Drug Administration Special Partial Hospitalization Billing Requirements for Hospitals, Community Mental Health Centers, and Critical Access Hospitals Bill Review for Partial Hospitalization Services Provided in Community Mental Health Centers (CMHC)
2142	CY 2011 Update for Durable Medical Equipment, Prosthetics, Orthotics and Supplies (DMEPOS) Fee Schedule
2143	Issued to a specific audience, not posted to Internet/Intranet due to Confidentiality of Instruction
2144	Affordable Care Act–Section 3113–Laboratory Demonstration for Certain Complex Diagnostic Tests Items 14-33–Provider of Service or Supplier Information
2145	Issued to a specific audience, not posted to Internet/Intranet due to Confidentiality of Instruction
2146	Issued to a specific audience, not posted to Internet/Intranet due to Confidentiality of Instruction
2147	Quarterly HCPCS Drug/Biological Code Changes–April 2011 Update
2148	Auto Denial of Claim Line(s) Items Submitted With a GZ Modifier Instructions for Codes With Modifiers (Carriers Only)
2149	Issued to a specific audience, not posted to Internet/Intranet due to Confidentiality of Instruction
2150	April Update to the CY 2011 Medicare Physician Fee Schedule Database (MPFSDB)
2151	Issued to a specific audience, not posted to Internet/Intranet due to Confidentiality of Instruction
2152	Primary Care Incentive Payment Program (PCIP) Eligibility for New Providers Enrolled in Medicare Primary Care Incentive Payment Program (PCIP) Definition of Primary Care Practitioners and Primary Care Services Coordination with Other Payments Claims Processing and Payment
2153	Clinical Laboratory Fee Schedule–Medicare Travel Allowance Fees for Collection of Specimens
2154	Payment Update and Common Working File (CWF) Editing for Influenza Virus Vaccine and Pneumococcal Vaccine Codes Healthcare Common Procedure Coding System(HCPCS) and Diagnosis Codes CWF Edits on FI/AB MAC Claims CWF Edits on Carrier/AB MAC Claims CWF A/B Crossover Edits for FI/AB MAC and Carrier /AB MAC Claims
2155	New Waived Tests
2156	Healthcare Common Procedure Coding System (HCPCS) Codes Subject to and Excluded from Clinical Laboratory Improvement Amendments (CLIA) Edits
2157	Implementation of edits for the Emergency Department (ED) adjustment policy under the Inpatient Psychiatric Facility Prospective Payment System (IPF PPS) IPF PPS System Edits
2158	Issued to specific audience, not posted to Internet/Intranet due to Confidentiality of Instruction
2159	Annual Wellness Visit (AWV), Including Personalized Prevention Plan Services (PPPS)

	Table of Contents Initial Preventive Physical Examination (IPPE) and Annual Wellness Visit (AWV) Evaluation and Management (E/M) Services Table of Contents Initial Preventive Physical Examination (IPPE) Healthcare Common Procedure Coding System (HCPCS) Coding for the IPPE A/B Medicare Administrative Contractor (MAC) and Contractor Billing Requirements A/B MAC and Fiscal Intermediary (FI) Billing Requirements Rural Health Clinic (RHC)/Federally Qualified Health Center (FQHC) Special Billing Instructions Outpatient Prospective Payment System (OPPS) Hospital Billing Coinsurance and Deductible Annual Wellness Visit Healthcare Common Procedure Coding System (HCPCS) Coding for the AWV A/B Medicare Administrative Contractor (MAC) and Carrier Billing Requirements A/B MAC and Fiscal Intermediary (FI) Billing Requirements Rural Health Clinic (RHC)/Federally Qualified Health Center (FQHC) Special Billing Instructions Coinsurance and Deductible Common Working File (CWF) Edits Medicare Summary Notices (MSNs), Remittance Advice Remark Codes (RARCs), Claims Adjustment Reason Codes (CARCs), and Advance Beneficiary Notices (ABNs)
2160	Correction to Manual References in Chapter 5, Section 20.2 Reporting of Service Units with HCP CS
2161	Incentive Payment Program for Primary Care Services, Section 5501(a) of the ACA Table of Contents Primary Care Bonus Incentive Payment Program (PCIP) Definition of Primary Care Practitioners and Primary Care Services Coordination with Other Payments Claims Processing and Payment
2162	Updates to the Internet Only Manual Pub. 100-04, Chapter 1–General Billing Requirements, Chapter 15–Ambulance, and Chapter 26– Completing and Processing Form CMS-1500 Data Set Carrier Specific Requirements for Certain Specialties/Services Components of the Ambulance Fee Schedule CMS Supplied National ZIP Code File and National Ambulance Fee Schedule File Coding Instructions for Paper and Electronic Claim Forms Health Insurance Claim Form CMS-1500 Items 14-33–Provider of Service or Supplier Information
2163	Screening for the Human Immunodeficiency Virus (HIV) Infection Human Immunodeficiency Virus (HIV) Screening Tests Healthcare Common Procedure Coding System (HCPCS) for HIV Screening Tests Billing Requirements Payment Method Types of Bill and Revenue Codes for Form CMS-1450 Diagnosis Code Reporting Medicare Summary Notice (MSN) and Claim Adjustment Reason Codes (CARC)
2164	Healthcare Provider Taxonomy Codes (HPTC) Update April 2011 Health Care Provider Taxonomy Code (HPTC) Requirements
2165	Update for Pub. 100-04, Medicare Claims Processing Manual, Chapter 31 ANSI X12N 276/277 Claims Status Request/Response Transaction Standard Transmission Requirements Interactive/Online (Non-DDE) Summary of the 276/277 Process for Carriers, DMERCs and Intermediaries Flat Files Translation Requirements
2166	Clarification to CR 6686 - Outpatient Mental Health Treatment Limitation Outpatient Mental Health Treatment Limitation
2167	April Update to the CY 2011 Medicare Physician Fee Schedule Database (MPFSDB)
2168	Expansion of Medicare Telehealth Services for CY 2011 List of Medicare Telehealth Services Inpatient Telehealth Consultation Services versus Inpatient Evaluation and Management (E/M) Visits Initial Inpatient Telehealth Consultations Defined Follow-Up Inpatient Telehealth Consultations Defined
2169	Incentive Payment Program for Primary Care Services, Section 5501(a) of the Patient Protection and Affordable Care Act (the ACA) Payment to a CAH Paid Under the Optional Method Table of Contents Zip Code Files Primary Care Incentive Payment Program (PCIP) Payments to Critical Access Hospitals (CAHs) Paid Under the Optional Method Definition of Primary Care Practitioners and Primary Care Services Identifying Primary Care Services Eligible for the PCIP Coordination with Other Payments Claims Processing and Payment for Critical Access Hospitals Paid Under the Optional Method
2170	Issued to a specific audience, not posted to Internet/Intranet due to Confidentiality of Instruction
2171	Magnetic Resonance Imaging (MRI) in Medicare Beneficiaries with Implanted Permanent Pacemakers (PMs) or Implantable Cardioverter Defibrillators (ICDs) Magnetic Resonance Angiography (MRA) Magnetic Resonance Angiography (MRA) Coverage Summary
2172	April 2011 Integrated Outpatient Code Editor (I/OCE) Specifications Version 12.1
2173	Affordable Care Act–Section 3113–Laboratory Demonstration for Certain Complex Diagnostic Tests Items 14-33-Provider of Service or Supplier Information
2174	April 2011 Update of the Hospital Outpatient Prospective Payment System (OPPS)
2175	2011 Update to the Therapy Code List
2176	Issued to a specific audience, not posted to Internet/Intranet due to Confidentiality of Instruction
2177	Claim Status Category and Claim Status Codes Update
2178	Instructions for Downloading the Medicare ZIP Code File for July 2011
2179	Quarterly Update to the Correct Coding Initiative (CCI) Edits, Version 17.1, Effective April 1, 2011

2180	April Update to the CY 2011 Medicare Physician Fee Schedule Database (MPFSDB)
2181	Medicare Claims Processing Pub. 100-04 Chapter 24 Update for HIPAA 5010 and EDI Enhancements
2182	July 2011 Quarterly Average Sales Price (ASP) Medicare Part B Drug Pricing Files and Revisions to Prior Quarterly Pricing Files
2183	Manual Clarifications for Skilled Nursing Facility (SNF) Part A Billing Billing SNF PPS Services Coding PPS Bills for Ancillary Services Reprocessing Inpatient Bills in Sequence Leave of Absence Billing Related to Physician's Services
2184	July Quarterly Update to 2011 Annual Update of Healthcare Common Procedure Coding System (HCPCS) Codes Used for Skilled Nursing Facility (SNF) Consolidated Billing (CB) Enforcement
2185	April 2011 Update of the Ambulatory Surgical Center (ASC) Payment System
2186	Waiver of Coinsurance and Deductible for Preventive Services in Rural Health Clinics (RHCs), Section 4104 of Affordable Care Act (ACA)
2187	New Waived Tests
2188	Issued to a specific audience, not posted to Internet/Intranet due to Sensitivity of Instruction
Medicare Secondary Payer (CMS-Pub. 100-05)	
77	Categorizing Diagnosis Codes 500-508 and 800-999 on Incoming Medicare Secondary Payer (MSP) Claims and on the MSP Auxiliary File for non-Group Health Plan (GHP) Claims Processing of Diagnosis Codes Related or Unrelated to an Accident or Injury for Non-GHP Claims Definition of Diagnosis Category Codes and Examples
78	Updates to the Electronic Correspondence Referral System (ECRS) Web User Guide v1.0 and Quick Reference Card v1.0 Table of Contents Coordination with the Coordination of Benefits Contractor (COBC) Contractor MSP Auxiliary File Update Responsibility COBC Electronic Correspondence Referral System (ECRS) ECRS Functional Description Technical Overview - Impact on Contractor Data Centers Notification to Contractor of MSP Auxiliary File Updates Referring Calls to the COBC Changes to Contractor Initial MSP Development Activities
79	Updates to the Electronic Correspondence Referral System (ECRS) Web User Guide v1.0 and Quick Reference Card v1.0 Table of Contents Coordination with the Coordination of Benefits Contractor (COBC) Contractor MSP Auxiliary File Update Responsibility COBC Electronic Correspondence Referral System (ECRS) ECRS Functional Description Technical Overview - Impact on Contractor Data Centers Notification to Contractor of MSP Auxiliary File Updates Referring Calls to the COBC Changes to Contractor Initial MSP Development Activities
Medicare Financial Management (CMS-Pub. 100-06)	
181	Add Physician Specialty Codes for Cardiac Electrophysiology (21) and Sports Medicine (23) to CROWD Forms "F" (ParDoc) and "8" (OptOut).
182	Notice of New Interest Rate for Medicare Overpayments and Underpayments, 2nd Notification for FY 2011.
183	To Create Form 9 Within the Contractor Reporting of Operational and Workload Data (CROWD) System for the Reporting of Primary Care Incentive Payments (PCIP) and HPSA Surgical Incentive Payments (HSIP) Table of Contents Form 9 Reporting of Primary Care Incentive (PCIP) Payments and HPSA Surgical Incentive Program (HSIP).Payments Category 1: Practitioners Receiving Incentive Payments Category 2: Summation of Incentive Payments Exhibits
184	Recovery Audit Program Underpayments Instruction Alteration Underpayments
185	Modify CROWD Form K to allow for the submission of additional Medicare Secondary Payer (MSP) savings information. General General
186	Receivables Initiated by the Recovery Auditor as Independent Audit Accessible Information
187	Notice of New Interest Rate for Medicare Overpayments and Underpayments-3rd Notification for FY 2011.
Medicare State Operations Manual (CMS-Pub. 100-07)	
70	Revisions to Appendix PP, State Operations Manual (SOM): Guidance to Surveyors for Long Term Care Facilities (LTC) for Minimum Data Set (MDS) 3.0 Implementation October 1, 2010 Revisions throughout F-tags 222–502 (CMS Forms 672, 802, 802P, 802S, & 805)
Medicare Program Integrity (CMS-Pub. 100-08)	
363	Clarification for Part A Contractors Including Audit and Claims Intermediaries Notifying Each Other via E-mail Upon Processing of the Initial Enrollment Application, Change of Information, Voluntary Termination or Any Other CMS-855 Transaction Table of Contents Jurisdictional Issues
364	Issued to a specific, audience not posted to Internet/Intranet due to Confidentiality of Instruction
365	Diabetes Self-Management Training (DSMT) Diabetes Self-Management Training (DSMT)
366	Auto Denial of Claim Line(s) Items Submitted With a GZ Modifier Table of Contents Auto Denial of Claim Line(s) Items submitted with a GZ modifier
367	Use of Claims History Information in Claim Payment Determinations Use of Claims History Information in Claim Payment Determinations
368	Issued to a specific, audience not posted to Internet/Intranet due to Confidentiality of Instruction
369	Advanced Diagnostic Imaging Accreditation Enrollment Procedures Advanced Diagnostic Imaging
370	Issued to a specific, audience not posted to Internet/Intranet due to Confidentiality Instruction
371	Implementation of Provider Enrollment Provisions in CMS-6028-FC Table of Contents Application Fees and Additional Screening Requirements Application Fees Background

	Scope of Site Visit Changes of Information Reactivations Movement of Providers and Suppliers into the High Level Temporary Moratoria Tracking
372	Effective Date of Certified Provider or Supplier Agreement or Approval
373	Advanced Diagnostic Imaging Accreditation Enrollment Procedures
Medicare Contractor Beneficiary and Provider Communications (CMS-Pub. 100-09)	
00	None
Medicare End-Stage Renal Disease Network Organizations (CMS Pub 100-14)	
00	None
Medicare Managed Care (CMS-Pub. 100-16)	
00	None
Medicare Business Partners Systems Security (CMS-Pub. 100-17)	
00	None
Demonstrations (CMS-Pub. 100-19)	
67	Affordable Care Act–Section 3113–Laboratory Demonstration for Certain Complex Diagnostic Tests
68	Implementation Support and Payment Processing for the Multi-payer Advanced Primary Care Practice (MAPCP) Demonstration
69	Implementation Support and Payment Processing for the Multi-payer Advanced Primary Care Practice (MAPCP) Demonstration
70	Affordable Care Act–Section 3113–Laboratory Demonstration for Certain Complex Diagnostic Tests
One Time Notification (CMS-Pub. 100-20)	
830	J15 Part A and Part B Medicare Administrative Contractor (A/B MAC) New Workload Numbers for the States of Kentucky, Ohio and the Regional Home Health Intermediary (RHHI) Region B Workloads, as well as the Split of the Customer Information Control System (CICS) Production and UAT Regions for the Part B Ohio/West Virginia Workloads and the Part B Kentucky/Indiana Workloads.
831	Analysis CR - The Inclusion of Veterans Administration (VA) Skilled Nursing Facility (SNF) claims to the VA Medicare Remittance Advice (eMRA) Process
832	Issued to a specific audience, not posted to Internet/Intranet due to Confidentiality of Instruction
833	Emergency Update to the CY 2011 Medicare Physician Fee Schedule (MPFS) Database
834	Medicare Fee-For-Service (FFS) Companion Guide
835	CMS Standard Edit/Audit Setting Update
836	Accreditation for Physicians and Non-Physician Practitioners Supplying the Technical Component of Advanced Diagnostic Imaging Services
837	Expand the Multi-Carrier System (MCS) Diagnosis File to Accommodate ICD-10 Diagnosis Codes
838	Entering Re-enrollment Bars in Section 3 of the Provider Enrollment, Chain and Ownership System (PECOS)
839	Improved Processing of Oxygen Services on Home Health Claims
840	Revision of the ICD-9 CM Codes Recognized for a Co-morbidity Payment Adjustment under the End Stage Renal Disease Prospective Payment System
841	Enhancements to the Recovery Audit Contractor (RAC) Mass Adjustment/Reporting Process in FISS
842	Off-Cycle Release of the Inpatient Prospective Payment System (IPPS) Pricer to Accept Diagnosis Codes and to Pass a Low-Volume Payment Amount
843	Processing Claims Spanning More than Ten Years with Unlimited Occurrence Span Codes (OSCs): Phase III
844	Issued to a specific audience, not posted to Internet/Intranet due to Sensitivity of Instruction
845	Updates to the Electronic Correspondence Referral System (ECRS) Web User Guide v1.0 and Quick Reference Card v1.0 and VMS Updates
846	Additional Healthcare Common Procedure Coding System (HCPCS) Codes Payable Under the Replacement Parts, Accessories, and Supplies Pricing Logic Established By Change Requests (CRs) 5917 and 6573
847	Health Insurance Portability and Accountability Act (HIPAA) 5010 and D.0 Medicare Administrative Contractor (MAC) Trading Partner Testing Direction for Calendar Year 2011
848	FISS System Changes for Elimination of Lump Sum Purchase Payment for Standard Power Wheelchairs Furnished on or After January 1, 2011 Due to the Affordable Care Act
849	Modifications to the Implementation of the PWK (paperwork) segment for X12N Version 5010
850	Health Insurance Portability and Accountability Act (HIPAA) 005010 837 Institutional (837I) Edits and 005010 837 Professional (837P) Edits–July 2011 Version
851	Update to the Fiscal Intermediary Shared System (FISS) End of Present on Admission (POA) Indicator Logic for Version 5010 837I Electronic Health Care Claim Submissions
852	Expansion of Multi Carrier System (MCS) Procedure Code File to Accommodate ICD-10 Diagnosis Codes
853	Currently Not Collectible (CNC) and Write-Off Closed Recommendations for claims Eligible for Section 935 Limitation on Recoupment of the Medicare Modernization Act (MMA)
854	Health Insurance Portability and Accountability (HIPAA) 5010/D.0 Fixes
855	July Common Edits and Enhancements Module (CEM) and Receipt, Control, and Balancing Updates
856	Implementation of the Health Insurance Portability and Accountability Act (HIPAA) Version 5010 276/277 Claim Status Edits July 2011Release
857	Issued to a specific audience, not posted to Internet/Intranet due to Confidentiality
858	Accreditation for Physicians and Non-Physician Practitioners Supplying the Technical Component of Advanced Diagnostic Imaging Services
859	Additions To and Revisions of Existing G-Codes for the Reporting of Skilled Nursing Services and Skilled Therapy Services in the Home Health or Hospice Setting
860	Issued to a specific audience, not posted to Internet/Intranet due to Confidentiality of Instruction
861	Common Working File (CWF) Requires More Space for the Health Insurance Master Record (HIMR) Auxiliary File Menu
862	Analysis and Design for Additional Fields for Additional Documentation Request (ADR) Letters for CR7254
863	"Integrated Data Repository (IDR) Claims Sourcing from Shared System Implementation" Based on Further Conference Calls and Further Research
864	Waiver of Coinsurance and Deductible for Preventive Services, Section 4104 of the Patient Protection and Affordable Health Care Act (the Affordable Care Act), Removal of Barriers to Preventive Services in Medicare
865	Guidance on Implementing System Edits for Certain Durable Medical Equipment, Prosthetics, Orthotics, and Supplies (DMEPOS) [This CR Rescinds and Fully Replaces CR7073.]
866	Reporting of Recoupment for Overpayment on the Remittance Advice (RA)
867	Analyze, Design, Maintain and Provide Implementation Instructions for a Modification of the Part A and Part B Common Edits and Enhancement Modules (CEMs), to allow 277C Edits to be Turned On/Off by the Encounter Data Front-End System (EDFES) Contractor Only
868	July Common Edits and Enhancements Module (CEM) and Receipt, Control, and Balancing Updates
869	Allowing the Common Working File (CWF) to accept both Medicare Secondary Payer (MSP) and Non-MSP Lines on MSP Claims and MSP Adjustment Claims. This CR rescinds and fully replaces CR 7026.
870	Health Insurance Portability and Accountability Act (HIPAA) 5010 and D.0 Medicare Administrative Contractor (MAC) Trading Partner Testing Direction for CY 2011
871	Implementation of New Reasonable Useful Lifetime (RUL) Policy for Stationary and Portable Oxygen Equipment
Quality Reporting Incentive Programs (CMS-Pub 100-22)	
2	Issued to a specific audience, not posted to Internet/Intranet due to Confidentiality
3	Issued to a specific audience, not posted to Internet/Intranet due to Confidentiality
State Buy-In Manual (CMS-Pub 100-24)	
3	Summary Accounting Statement–Exhibit State Part A and Part B Medicare Premium Billing Summary Account Statement–Exhibit

BILLING CODE 4120–01–C

Addendum II: Regulation Documents Published in the Federal Register (January through March 2011)

Regulations and Notices

Regulations and notices are published in the daily **Federal Register**. Interested individuals may purchase individual copies or subscribe to the **Federal Register** by contacting GPO at *http://www.gpo.gov/fdsys.* When ordering individual copies, it is necessary to cite either the date of publication or the volume number and page number.

The **Federal Register** is available as an online database through *GPO Access.* The online database is updated by 6 a.m. each day the **Federal Register** is published. The database includes both text and graphics from Volume 59, Number 1 (January 2, 1994) through the present date and can be accessed at *http://www.gpoaccess.gov/fr/index.html.* The following Web site *http://www.archives.gov/federal-register/* provides information on how to access electronic editions, printed editions, and reference copies.

Addendum II lists all substantive and interpretive Medicare and Medicaid regulations and general notices published in the **Federal Register** during the quarter covered by this notice.

BILLING CODE 4120–01–P

Publication Date	FR Vol. 76 Page Number	42 CFR Parts Affected	File Code	Title of Regulation
January 3, 2011	148	----------	CMS-2321-N	Medicaid: Final FY 2009 and 2010 and Preliminary FY 2011 disproportionate share Hospital (DSH) Payment Allotments and Institutions for Mental Disease DSH Limits
January 5, 2011	628	413	CMS-3206-F	Medicare Program; End-Stage Renal Disease Quality Incentive Program
January 10, 2011	1366	410	CMS-1503-F2	Medicare Program; Amendment to Payment Policies Under the Physician Fee Schedule and Other Revisions to Part B for CY 2011
January 11, 2011	1670	405, 409, 410, 411, 413, 414, 415, and 424	CMS-1503-CN2	Medicare Program; Payment Policies Under the Physician Fee Schedule and Other Revisions to Part B for CY 2011; Corrections
January 13, 2011	2454	422, 480	CMS-3239-P	Medicare Program; Hospital Inpatient Value-Based Purchasing Program
January 27, 2011	4907	----------	CMS-9978-N	The Consumer Operated and Oriented Plan (CO–OP) Advisory Board
January 27, 2011	4998	412	CMS-1346-P	Medicare Program; Inpatient Psychiatric Facilities Prospective Payment System—Update for Rate Year Beginning July 1, 2011 (RY 2012)
February 2, 2011	5774	----------	CMS-9983-NC	Planning and Establishment of Consumer Operated and Oriented Plan Program; Request for Comments Regarding Provisions of Consumer Operated and Oriented Plan Program
February 2, 2011	5861	405, 424, 447, 455, 457, and 498	CMS-6028-FC	Medicare, Medicaid, and Children's Health Insurance Programs; Additional Screening Requirements, Application Fees, Temporary Enrollment Moratoria, Payment Suspensions and Compliance Plans for Providers and Suppliers
February 2, 2011	5755	416, 418, 482, 483, 484, 485, 486, and 491	CMS-3225-P	Medicare and Medicaid Programs; Patient Notification of Right To Access State Survey Agencies and Medicare Beneficiary Notification of the Right To Access Quality Improvement Organizations
February 11, 2011	7767	**45 CFR,** 144 and 147	CMS-9981-P	Student Health Insurance Coverage
February 17, 2011	9283	434, 438, 447	CMS-2400-P	Medicaid Program; Payment Adjustment for Provider-Preventable Conditions Including Health Care-Acquired Conditions
February 17, 2011	9233	457	CMS-2291-F	Children's Health Insurance Program (CHIP); Allotment Methodology and States' Fiscal Years 2009 Through 2015 CHIP Allotments
February 18, 2011	9503	483, 488, 489, 498	CMS-3230-IFC	Medicare and Medicaid Programs; Requirements for Long-Term Care (LTC) Facilities; Notice of Facility Closure
February 18, 2011	9502	424	CMS-1510-F2	Medicare Program; Home Health Prospective Payment System Rate Update for Calendar Year 2011; Changes in Certification Requirements for Home Health Agencies and Hospices; Correction
February 25, 2011	10736	441	CMS-2337-P	Medicaid Program; Community First Choice Option
February 25, 2011	10598	----------	CMS-2326-FN	Medicare and Medicaid Programs; Application by the Joint Commission for Deeming Authority for Psychiatric Hospitals
February 25, 2011	10602	----------	CMS-1515-N	Medicare Program; Public Meetings in Calendar Year 2011 for All New Public Requests for Revisions to the Healthcare Common Procedure Coding System (HCPCS) Coding and Payment Determinations
February 25, 2011	10600	----------	CMS-1347-N	Medicare Program; Public Meeting in Calendar Year 2011 for New Clinical Laboratory Tests Payment Determinations
March 2, 2011	11484	----------	CMS-9978-N2	Public Meeting of the Consumer Operated and Oriented Plan (CO–OP) Advisory Board, March 14, 2011
March 3, 2011	11782	----------	CMS-7020-N	Medicare, Medicaid, and Children's Health Insurance Programs; Renewal, Expansion, and Renaming of the Advisory Panel on Outreach and Education (APOE) and Request for Nominations
March 8, 2011	12740	----------	CMS-9978-N3	Public Meeting of the Consumer Operated and Oriented Plan (CO–OP) Advisory Board; Meeting Location Change
March 11, 2011	13418	----------	CMS-3246-N	Medicare Program; Meeting of the Medicare Evidence Development and Coverage Advisory Committee, May 11, 2011
March 11, 2011	13292	410,416, and 419	CMS-1504-CN	Medicare Program: Changes to the Hospital Outpatient Prospective Payment System and CY 2011 Payment Rates; Changes to the Ambulatory Surgical Center Payment System and CY 2011 Payment Rates; Changes to Payments to Hospitals for Graduate Medical Education Costs; Corrections
March 14, 2011	13553	**45 CFR**, 155	CMS-9987-P	Medicaid, Application, Review, and Reporting Process for Waivers for State Innovation
March 14, 2011	13515	413	CMS-1430-IFC	Medicare Program; Revisions to the Reductions and Increases to Hospitals' FTE Resident Caps for Graduate Medical Education Payment Purposes
March 18, 2011	15106	488	CMS-2435-F	Medicare and Medicaid Programs; Civil Money Penalties for Nursing Homes
March 21, 2011	15316	----------	CMS-2318-N	Medicaid Program; State Allotments for Payment of Medicare Part B Premiums for Qualifying Individuals: Federal Fiscal Year 2010 and Federal Fiscal Year 2011
March 23, 2011	16422	----------	CMS-6029-N	Medicare, Medicaid, and Children's Health Insurance Programs; Provider Enrollment Application Fee Amount for 2011
March 25, 2011	16793	----------	CMS-4154-FN	Medicare and Medicaid Programs; Renewal of Deeming Authority of the National Committee for Quality Assurance for Medicare Advantage Health Maintenance Organizations and Local Preferred Provider Organizations
March 25, 2011	16788	----------	CMS-1583-N	Medicare Program; Solicitation of Two Nominations to the Advisory Panel on Ambulatory Payment Classification Groups
March 30. 2011	17653	----------	CMS-9978-N4	Public Meeting of the Consumer Operated and Oriented Plan (CO–OP) Advisory Board, April 15, 2011
March 31, 2011	17870	----------	CMS-9063-N	Medicare and Medicaid Programs; Quarterly Listing of Program Issuances—October Through December 2010

BILLING CODE 4120–01–C

For the purposes of this quarterly notice, we list dates published, the **Federal Register** citations, parts of the Code of Federal Regulations (CFR) that have changed (if applicable), agency file codes, and titles of the regulations for the ending date of the period covered by this notice. Based on our proposal for future quarterly notices, we would discontinue publishing the list of all substantive and interpretive Medicare and Medicaid regulations and general notices published in the **Federal Register.** We would continue to provide the hyperlink to the Web site to access this information and a contact person for questions or additional information.

This information is available on our Web site at: *http://www.cms.gov/quarterlyproviderupdates/downloads/Regs-1Q11QPU.pdf.*

For questions or additional information, contact Terri Plumb (410–786–4481).

Addendum III: CMS Rulings

CMS Rulings are decisions of the Administrator that serve as precedent final opinions and orders and statements of policy and interpretation. They provide clarification and interpretation of complex or ambiguous provisions of the law or regulations relating to Medicare, Medicaid, Utilization and Quality Control Peer Review, private health insurance, and related matters.

The rulings can be accessed at *http://www.cms.gov/Rulings/CMSR/list.asp#TopOfPage.*

For questions or additional information, contact Tiffany Lafferty (410–786–7548).

Addendum IV: Medicare National Coverage Determinations (January through March 2011)

Addendum IV includes completed national coverage determinations (NCDs), or reconsiderations of completed NCDs, from the quarter covered by this notice. Completed decisions are identified by the section of the National Coverage Determination Manual (NCDM) in which the decision appears, the title, the date the publication was issued, and the effective date of the decision.

A national coverage determination (NCD) is a determination by the Secretary with respect to whether or not a particular item or service is covered nationally under the Medicare Program (title XVIII of the Act), but does not include a determination of the code, if any, that is assigned to a particular covered item or service, or payment determination for a particular covered item or service. The entries below include information concerning completed decisions as well as sections on program and decision memoranda, which also announce decisions or, in some cases, explain why it was not appropriate to issue an NCD. Information on completed decisions as well as pending decisions has also been posted on the CMS Web site.

Title	NCDM Section	Transmittal Number	Issue Date	Effective Date
Home Oxygen Use to Treat Cluster Headache (CH)	240.2	TR130NCD	01/14/2011	01/04/2011
Magnetic Resonance Imaging (MRI) in Medicare Beneficiaries with Implanted (PMs) or ICDs	220.1	TR132NCD	03/04/2011	02/24/2011
Changes to the NCD Edit Software for April 2011	190	TR2133CP	01/14/2011	04/01/2011

Based on our proposal for future quarterly notices, we would continue to provide only the specific updates that have occurred in the three-month period along with a hyperlink to the Web site to access this information and a contact person for questions or additional information.

This information is available on our Web site at: *http://www.cms.gov/medicare-coverage-database/.*

For questions or additional information, contact Wanda Belle (410–786–7491).

Addendum V: FDA-Approved Category B Investigational Device Exemptions (IDEs) (January through March 2011)

Addendum V includes listings of the FDA-approved investigational device exemption (IDE) numbers that the FDA assigns. The listings are organized according to the categories to which the devices are assigned (that is, Category A or Category B), and identified by the IDE number.

For the purposes of this quarterly notice, we list the Category B IDEs as of the ending date of the period covered by this notice. Based on our proposal for future quarterly notices, we would continue to provide only the specific updates that have occurred in the three-month period along with a hyperlink to the Web site to access this information and a contact person for questions or additional information.

For questions or additional information, contact John Manlove (410–786–6877).

Under the Food, Drug, and Cosmetic Act (21 U.S.C. 360c) devices fall into one of three classes. To assist CMS under this categorization process, the FDA assigns one of two categories to each FDA-approved investigational device exemption (IDE). Category A refers to experimental IDEs, and Category B refers to non-experimental IDEs. To obtain more information about the classes or categories, please refer to the notice published in the April 21, 1997 **Federal Register** (62 FR 19328).

IDE	Category
BB14552	B
BB14587	B
BB14591	B
G090133	B
G090228	B
G090250	B
G100002	B
G100061	B
G100104	B
G100140	B
G100170	B
G100200	B
G100239	B
G100272	B
G100282	B
G100296	B
G100301	B
G100305	B
G100322	B
G100323	B
G100324	B
G100330	B
G100331	B
G100336	B
G110001	B
G110018	B
G110025	B
G110038	B
G110039	B
G110043	B
G110045	B

Addendum VI: Approval Numbers for Collections of Information (January through March 2011)

Addendum VI includes listings of all approval numbers from the Office of Management and Budget (OMB) for collections of information in CMS regulations in title 42; title 45, subchapter C; and title 20 of the CFR.

All approval numbers are available to the public at Reginfo.gov, through a computer system that supports the information collection review process. Under the review process, approved information collection requests are assigned OMB control numbers. A single control number may apply to several related information collections.

BILLING CODE 4120–01–P

OMB NUMBER	Approved CFR Sections in Title 42 (42CFR), Title 45 (45 CFR), and Title 20 (20 CFR) (Note: Sections in Title 45 are preceded by "45 CFR," and sections in Title 20 are preceded by "20 CFR."
0938-0022	413.20, 413.24, 413.106
0938-0023	424.103
0938-0025	406.28,/406.13, 407.27
0938-0027	486.100
0938-0035	407.40
0938-0037	413.20, 413.24
0938-0046	405.2133,431.52, 440.150
0938-0050	413.20, 413.24
0938-0062	431.52, 435.151, 435.1009, 440.220, 440.150, 442.1, 442.10 - 442.16, 442.30, 442.40, 442.42, 442.100 - 442.119, 483.400 - 483.480, 488.332, 488.400, 498.3 - 498.5
0938-0065	485.701-485.729
0938-0074	491.1-491.11
0938-0080	406.7, 406.13
0938-0101	430.30, 430.30 (a)(1), 430.30 (b)
0938-0102	413.20, 413.24
0938-0107	413.20, 413.24
0938-0146	431.800-431.865
0938-0147	431.800-431.865
0938-0151	493.1-493.2001
0938-0193	430.10-430.20, 440.167
0938-0202	413.17, 413.20
0938-0214	411.25, 489.2, 489.20
0938-0236	413.20, 413.24
0938-0242	403.744, 418.100, 482.41, 460.72, 483.70, 485.623, 483.470, 416.44
0938-0245	407.10, 407.11, 408.40
0938-0246	431.800-431.865
0938-0251	406.7, 406.6, 406.10, 406.11, 406.20
0938-0266	416.41, 416.43, 416.47, 416.48
0938-0267	485.66, 485.55
0938-0269	412.116, 413.64
0938-0272	440.180, 441.300-441.310 No CFR Citations Listed. in ICRs
0938-0273	485.701-485.729
0938-0287	447.31
0938-0301	413.20, 413.24, 415.60
0938-0313	489.11, 489.20
0938-0328	482.12, 482.13, 482.21, 482.22, 482.27, 482.30, 482.41, 482.43, 482.45, 482.53, 482.56, 482.57, 482.60, 482.61, 482.62, 485.618, 485.631
0938-0334	491.9, 491.10
0938-0338	486.104, 486.106, 486.110
0938-0354	441.50 No CFR Citations Listed in ICRs.
0938-0355	442.30, 488.26
0938-0358	412.25, 412.27
0938-0359	412.40-412.52
0938-0378	482.60-482.62
0938-0379	442.30, 488.26
0938-0391	488.18, 488.26, 488.28
0938-0426	480.104, 480.105, 480.116, 480.134
0938-0429	447.53
0938-0443	478.18, 478.34, 478.36, 478.42
0938-0444	1004.40, 1004.50, 1004.60, 1004.70
0938-0445	412.44, 412.46, 431.630, 476.71, 476.74, 476.78
0938-0447	405.2133
0938-0448	405.2133, **45 CFR** 5, 5b; **20 CFR** Parts 401, 422E
0938-0449	440.180, 441.300-441.310
0938-0454	424.20
0938-0456	412.105
0938-0463	413.20, 413.24, 413.106
0938-0467	431.17, 431.306, 435.910, 435.920, 435.940-435.960
0938-0469	423.574(a)(5), 460.208
0938-0470	417.140, 417.800
0938-0502	433.138
0938-0512	486.301-486.348
0938-0526	475.102, 475.103, 475.104, 475.105, 475.106
0938-0534	410.38, 424.5
0938-0544	493.1 - 493.2001
0938-0565	411.20 - 411.206
0938-0566	411.404, 411.406, 411.408
0938-0573	412.256
0938-0578	447.534
0938-0581	493.1 - 493.2001
0938-0599	493.1 - 493.2001
0938-0600	405.371, 405.378
0938-0610	417.436, 422.128, 430.12, 431.20, 431.107, 438.6 , 440.170, 483.10, 484.10, 489.102
0938-0612	493.801, 493.803, 493.1232, 493.1233, 493.1234, 493.1235, 493.1236, 493.1239, 493.1241, 493.1242, 493.1249, 493.1251, 493,1252, 493.1253, 493.1254, 493.1255, 493.1256, 493.1261, 493.1262, 493.1263, 493.1269, 493.1273, 493.1274, 493.1278, 493.1283, 493.1289, 493.1291, 493.1299 /493.1 - 2001
0938-0618	433.68, 433.74, 447.272
0938-0653	493.1771, 493.1773, 493.1777

OMB NUMBER	Approved CFR Sections in Title 42 (42CFR), Title 45 (45 CFR), and Title 20 (20 CFR) (Note: Sections in Title 45 are preceded by "45 CFR," and sections in Title 20 are preceded by "20 CFR."
0938-0657	405.2110, 405.2112
0938-0667	482.12, 488.18, 489.20, 489.24
0938-0686	493.551 - 493.557
0938-0688	493.553, 493.555, 493.551 ,493.557
0938-0691	412.106
0938-0692	405.1205 ,422.620
0938-0701	422.152
0938-0702	**45 CFR** 146.111, 146.115, 146.117, 146.150, 146.152, 146.160, 146.180
0938-0703	**45 CFR** 148.120, 148.122, 148.124, 148.126, 148.128
0938-0714	411.372 ,411.373
0938-0730	405.410, 405.430, 405.435, 405.440, 405.445, 405.455, 410.61, 415.110, 424.24
0938-0732	422.152, 422.156 ,417.472
0938-0734	**45 CFR** 5b
0938-0739	413.337, 413.343, 424.32, 483.20
0938-0749	424.57
0938-0753	422.000 - 422.700
0938-0758	413.20 , 413.24
0938-0760	484.55, 484.205, 484.245, 484.250
0938-0763	422.250, 422.252, 422.254, 422.256, 422.258, 422.262, 422.264, 422.266, 422.270, 422.300, 422.304, 422.306, 422.308, 422.310, 422.312, 422.314, 422.316, 422.318, 422.320, 422.322, 422.324, 423.251, 423.258, 423.265, 423.272, 423.286, 423.293, 423.301, 423.308, 423.315, 423.322, 423.329, 423.336, 423.343, 423.346, 423.350
0938-0778	422.111(c)(3),
0938-0781	411.404, 484.10
0938-0786	438.360, 438.362, 438.364
0938-0790	460.12 - 460.210
0938-0798	413.65, 419.42
0938-0802	419.43
0938-0829	422.568
0938-0832	Parts 489 and 491
0938-0833	483.350 - 483.376
0938-0841	431.636, 457.50, 457.60, 457.70, 457.340, 457.350, 457.431, 457.440, 457.525, 457.560, 457.570, 457.740, 457.750, 457.810, 457.940, 457.945, 457.965, 457.985, 457.1005, 457.1015, 457.1180
0938-0842	412.23, 412.604, 412.606, 412.608, 412.610, 412.614, 412.618, 412.626, 413.64
0938-0846	411.352 - 411.361 412 Subpart P
0938-0857	Part 419
0938-0860	Part 419
0938-0866	**45 CFR** Part 162
0938-0872	413.337, 483.20
0938-0878	Part 422 & 423 Subparts F and G
0938-0887	**45 CFR** 148.316, 148.318, 148.320
0938-0897	412.22, 412.533
0938-0907	412.230, 412.304, 413.65
0938-0910	422.620, 422.624, 422.626
0938-0915	421.120, 421.122 and 421.201
0938-0916	483.160
0938-0920	438.6, 438.8, 438.10, 438.12, 438.50, 438.56, 438.102, 438.114, 438.202, 438.206, 438.207, 438.240, 438.242, 438.402, 438.404, 438.406, 438.408, 438.410, 438.414, 438.416, 438.604, 438.710, 438.722, 438.724, 438.810
0938-0921	42 CFR Subpart J section 800-806
0938-0931	**45 CFR** 142.408, 162.408, and 162.406
0938-0933	438.50
0938-0935	422 Subpart K & 417.400
0938-0936	423.514, 423.440, 423.153, 423.112, 423.120, 423.512
0938-0939	405.502
0938-0944	422.250, 422.252, 422.254, 422.256, 422.258, 422.262, 422.264, 422.266, 422.270, 422.300, 422.304, 422.306, 422.308, 422.310, 422.312, 422.314, 422.316, 422.318, 422.320, 422.322, 422.324, 423.251, 423.258, 423.265, 423.272, 423.279, 423.286, 423.293, 423.301, 423.308, 423.315, 423.322, 423.329, 423.336, 423.343, 423.346, 423.350
0938-0950	405.910
0938-0951	423.48
0938-0953	405.1200 and 405.1202
0938-0954	414.906, 414.908, 414.910, 414.914, 414.916
0938-0957	Part 423 Subpart R
0938-0964	42 CFR 423
0938-0975	423.562(a)(3)
0938-0976	423.568(c), 423.568(d), 423.580, 423.582
0938-0977	Part 423 Subpart R
0938-0978	423.464
0938-0982	422.310, 423.301, 423.322, 423.875, 423.888
0938-0986	412.20-412.30
0938-0990	423.56
0938-0992	423.505, 423.514
0938-0993	1396
0938-0997	424.5
0938-1013	423.56(e)
0938-1019	405.1206, 422.622
0938-1020	412.84(i)(1), 412.525(a)(4)(ii), 525(a)(4)(iv)(A), 412.529(f)(2), 412.529(f)(4)(i)
0938-1023	422.152(a)(1), 422.152(a)(2)
0938-1024	1396
0938-1026	447.520
0938-1033	455
0938-1034	489.20

OMB NUMBER	Approved CFR Sections in Title 42 (42CFR), Title 45 (45 CFR), and Title 20 (20 CFR) (Note: Sections in Title 45 are preceded by "45 CFR," and sections in Title 20 are preceded by "20 CFR."
0938-1049	424.36(b)
0938-1098	ARRA Section 5006
0938-1100	**45 CFR** Part 152
0938-1105	**26 CFR** 54.9815-2711T;**29 CFR** 2590.715-2711; and **45 CFR** 147.126
0938-1108	115 OF MIPPA
0938-1114	**45 CFR** 158 /158.321(a), 158.321(b), 158.321(d)(1)-(13), 158.322, 158.323
0938-1115	422.516g and 423.514g
0938-1117	No CFR Citations Listed.
0938-1122	No CFR Citations Listed.
0938-1123	**19 CFR** 1903

BILLING CODE 4120–01–C

For the purposes of this quarterly notice, we list all active approval numbers as of the ending date of the period covered by this notice. Based on our proposal for future quarterly notices, we would discontinue publishing the listing of all approval numbers from the Office of Management and Budget (OMB) for collections of information in CMS regulations in title 42; title 45, subchapter C; and title 20 of the CFR. We would continue to provide the hyperlink to the Web site to access this information and a contact person for questions or additional information.

This information is available at *http://www.reginfo.gov/public/do/PRAMain.*

For questions or additional information, contact Mitch Bryman (410–786–5258).

Addendum VII: Medicare-Approved Carotid Stent Facilities, (January Through March 2011)

Addendum VII includes listings of Medicare-approved carotid stent facilities. All facilities listed meet CMS standards for performing carotid artery stenting for high risk patients.

On March 17, 2005, we issued our decision memorandum on carotid artery stenting. We determined that carotid artery stenting with embolic protection is reasonable and necessary only if performed in facilities that have been determined to be competent in performing the evaluation, procedure, and follow-up necessary to ensure optimal patient outcomes. We have created a list of minimum standards for facilities modeled in part on professional society satements on competency. All facilities must at least meet our standards in order to receive coverage for carotid artery stenting for high risk patients.

For the purposes of this quarterly notice, we list all Medicare-approved carotid stent facilities that meet the CMS standards as of the ending date of the period covered by this notice. Based on our proposal for future quarterly notices, we would provide only the specific updates that have occurred in the three-month period along with a hyperlink to the Web site to access this information and a contact person for questions or additional information.

This information is available on our Web site at: *http://www.cms.gov/MedicareApprovedFacilitie/CASF/list.asp#TopOfPage.* For questions or additional information, contact Sarah J. McClain (410–786–2294).

BILLING CODE 4120–01–P

Facility	Provider Number	Effective Date	State	Additional Information
Abbott Northwestern Hospital 800 East 28th Street Minneapolis, MN 55407	240057	06/14/2005	MN	
Abilene Regional Medical Center 6250 Highway 83/84 Abilene, TX 79606	450558	09/15/2005	TX	
Advocate Christ Medical Center 4440 West 95th Street Oak Lawn, IL 60453	140208	05/03/2005	IL	
Advocate Illinois Masonic Medical Center 836 W. Wellington Avenue Chicago, IL 60657-5193	140182	09/28/2005	IL	
Advocate Lutheran General Hospital 1775 Dempster Street Park Ridge, IL 60068	140223	05/05/2005	IL	
Advocate South Suburban Hospital 17800 South Kedzie Avenue Hazel Crest, IL 60429-0989	140250	10/24/2005	IL	
Bakersfield Heart Hospital 3001 Sillect Avenue Bakersfield, CA 93308	050724	05/25/2005	CA	
Bakersfield Memorial Hospital 420 34th Street Bakersfield, CA 93301	050036	05/23/2005	CA	
The Baldwin County Eastern Shore Health Care Authority d/b/a Thomas Hospital 750 Morphy Avenue Fairhope, AL 36532	010100	04/07/2005	AL	
Banner Good Samaritan Medical Center 1111 E. McDowell Road Phoenix, AZ 85006	030002	05/23/2005	AZ	
Banner Heart Hospital 6750 East Baywood Avenue Mesa, AZ 85206	030105	07/15/2005	AZ	
Camden-Clark Memorial Hospital 800 Garfield Avenue, P.O. Box 718 Parkersburg, WV 26102	510058	08/22/2005	WV	
Candler Hospital 5353 Reynolds Street Savannah, GA 31405	110024	08/26/2005	GA	
Carilion Roanoke Memorial Hospital 1906 Belleview Avenue Roanoke, VA 24014	490024	09/06/2005	VA	
Cape Cod Hospital P.O. Box 640 Hyannis, MA 02601	220012	11/01/2005	MA	27 Park Street
Dayton Heart Hospital 707 S. Edwin Moses Boulevard Dayton, OH 45408	360253	07/07/2005	OH	
Deaconess Billings Clinic 2800 Tenth Avenue North Billings, MT 59107-7000	270004	10/27/2005	MT	P.O. Box 37000
Deaconess Hospital Inc. 600 Mary Street Evansville, IN 47747	150082	06/20/2005	IN	
Florida Hospital Zephyrhills 7050 Gall Boulevard Zephyrhills, FL 33541-1399	100046	07/07/2005	FL	
East Texas Medical Center Athens 2000 South Palestine Athens, TX 75751	450389	07/27/2005	TX	
Aiken Regional Medical Centers 302 University Parkway Aiken, SC 29802-1117	420082	05/10/2005	SC	P.O. Drawer 1117
Akron General Medical Center 400 Wabash Avenue Akron, OH 44266	360027	05/16/2005	OH	
Albany Medical Center Hospital 43 New Scotland Avenue Albany, NY 12208	330013	05/16/2005	NY	
Alegent Health Bergan Mercy Medical Center 7500 Mercy Road Omaha, NE 68124-9832	280060	08/01/2005	NE	
Alexian Brothers Medical Center 800 W. Biesterfied Road Elk Grove Village, IL 60007	140258	04/18/2005	IL	
Allegheny General Hospital 320 East North Avenue Pittsburgh, PA 15212-4772	390050	05/11/2005	PA	
Allen Memorial Hospital 1825 Logan Avenue Waterloo, IA 50703-1999	160110	07/15/2005	IA	
Alta Bates Summit Medical Center, Alta Bates Campus 2450 Ashby Avenue Berkley, CA 94705	050305	07/15/2005	CA	
Alta Bates Summit Medical Center, Summit Campus 350 Hawthorne Avenue Oakland, CA 94609	050043	07/15/2005	CA	
Antelope Valley Hospital 1600 West Avenue J Lancaster, CA 93534	050056	07/07/2005	CA	
Appleton Medical Center 1818 North Meade Street Appleton, WI 54911	520160	06/14/2005	WI	
Arizona Heart Hospital 1930 E. Thomas Road Phoenix, AZ 85016	030102	04/18/2005	AZ	
Arkansas Heart Hospital 1701 S. Shackleford Road Little Rock, AR 72211	040134	06/29/2005	AR	
Athens Regional Medical Center 1199 Prince Avenue Athens, GA 30606	110074	11/03/2005	GA	
Aspirus Wausau Hospital, Inc 333 Pine Ridge Boulevard Wausau, WI 54401	520030	05/10/2005	WI	
AtlantiCare Regional Medical Center 65 Jimmie Leeds Road Pomona, NJ 08240	310064	10/21/2005	NJ	
Atlanta Medical Center 303 Parkway Drive, NE Atlanta, GA 30312-1212	110115	06/27/2005	GA	
Augusta Medical Center 78 Medical Center Drive Fisherville, VA 22939	490018	06/20/2005	VA	
Aurora Sinai Medical Center 945 N. 12th Street Milwaukee, WI 53201	520064	05/03/2005	WI	
Avera Heart Hospital of South Dakota 4500 West 69th Street Sioux Falls, SD 57108	430095	05/05/2005	SD	
Baptist Health Medical Center-Little Rock 9601 Interstate 630, Exit 7 Little Rock, AR 72205-7299	040114	10/24/2005	AR	

Facility	Provider Number	Effective Date	State	Additional Information
Baptist Healthcare of Oklahoma, Inc. 600 S. Monroe Enid, OK 73702	370016	06/29/2005	OK	d/b/a INTEGRIS Bass Baptist Health Center
Baptist Hospital East 4000 Kresge Way Louisville, KY 40207	180130	04/12/2005	KY	
Baptist Hospital of East Tennessee 137 Blount Avenue Knoxville, TN 37920	440019	04/12/2005	TN	
Baptist Hospital of Miami 8900 North Kendall Drive Miami, FL 33176	100008	08/22/2005	FL	
Baptist Hospital-Pensacola 1000 West Moreno Street Pensacola, FL 32522-7500	100093	04/27/2005	FL	Post Office Box 17500
Baptist Medical Center 1225 North State Street Jackson, MS 39202	250102	05/05/2005	MS	
Baptist Medical Center 111 Dallas Street San Antonio, TX 78205-1230	450058	10/04/2005	TX	
Baptist Medical Center South 2105 East South Boulevard Montgomery , AL 36111-0010	010023	04/20/2005	AL	P.O. Box 11010
Baptist Memorial Hospital 6019 Walnut Grove Road Memphis, TN 38120	440048	04/18/2005	TN	
Baptist Memorial Hospital-DeSoto 7601 Southcrest Parkway Southaven, MS 38671	250141	05/05/2005	MS	
Baptist Montclair Medical Center 800 Montclair Road Birmingham, AL 35213	010104	04/26/2005	AL	
Baptist St. Anthony's Hospital 1600 Wallace Boulevard Amarillo, TX 79106	450231	07/07/2005	TX	
Barnes-Jewish Hospital One Barnes-Jewish Hospital Plaza St. Louis, MO 63110	260032	05/05/2005	MO	
Bassett Healthcare One Atwell Road Cooperstown, NY 13326-1394	330136	10/24/2005	NY	
Battle Creek Health System 300 North Avenue Battle Creek, MI 49016	230075	07/15/2005	MI	
Bay Medical Center 615 North Bonita Avenue Panama City, FL 32401	100026	05/23/2005	FL	
Bay Regional Medical Center 1900 Columbus Avenue Bay City, MI 48708	230041	10/24/2005	MI	
Baylor All Saints Medical Center 1400 Eighth Avenue Fort Worth, TX 76104	450137	09/12/2005	TX	
Baylor Heart and Vascular Hospital 621 North Hall Street Dallas, TX 75226	450851	10/27/2005	TX	
Baylor Regional Medical Center at Grapevine 1650 West College Street Grapevine, TX 76051	450563	10/14/2005	TX	
Baylor University Medical Center, Department of Radiology 3500 Gaston Avenue Dallas, TX 75246	450021	09/22/2005	TX	
Bayonne Medical Center 29th Street at Avenue E Bayonne, NJ 07002	310025	10/04/2005	NJ	
Baystate Medical Center 759 Chestnut Street Springfield, MA 01199	220077	05/16/2005	MA	
Benefis Healthcare 1101 26th Street South Great Falls, MT 59405	270012	05/26/2005	MT	
Beth Israel Deaconess Medical Center 330 Brookline Avenue Boston, MA 02215	220086	07/15/2005	MA	
Bethesda Hospital 10500 Montgomery Road Cincinnati, OH 45242-9508	360179	05/05/2005	OH	
Blanchard Valley Regional Health Center 145 West Wallace Street Findlay, OH 45840	360095	05/26/2005	OH	
Boca Raton Community Hospital 800 Meadows Road Boca Raton, FL 33486	100168	06/29/2005	FL	
Bon Secours Cottage Health Services 468 Cadieux Road Grosse Pointe, MI 48230	230089	09/15/2005	MI	
Bon Secours St. Mary's Hospital 5801 Bremo Road Richmond, VA 23226	490059	04/01/2005	VA	
Bon Secours DePaul Medical Center 150 Kingsley Lane Norfolk, VA 23505	490011	08/01/2005	VA	
Borgess Medical Center 1521 Gull Road Kalamazoo, MI 49048	230117	04/12/2005	MI	
Boston Medical Center Corporation One Boston Medical Center Place Boston, MA 02118	220031	10/21/2005	MA	
Bowling Green Warren County Community Hospital Corp. 250 Park Street Bowling Green, KY 42102-9010	180013	08/04/2005	KY	d/b/a The Medical Center
Brackenridge Hospital 601 East 15th Street Austin, TX 78701-1096	450124	06/07/2005	TX	
Brandon Regional Hospital 119 Oakfield Drive Brandon, FL 33511	100243	11/01/2005	FL	
Brigham and Women's Hospital 75 Francis Street Boston, MA 02115	220110	05/16/2005	MA	
Bronson Methodist Hospital 601 John Street Kalamazoo, MI 49007	230017	06/27/2005	MI	
Brookwood Medical Center 2010 Brookwood Medical Center Drive Birmingham, AL 35209	010139	06/14/2005	AL	
Brotman Medical Center 3828 Delmas Terrace Culver City, CA 90231-2459	050752	06/08/2005	CA	

Facility	Provider Number	Effective Date	State	Additional Information
BryanLGH Medical Center 1600 South 48th Street Lincoln, NE 68506-1299	280003	07/15/2005	NE	
Bryn Mawr Hospital 130 South Bryn Mawr Avenue Bryn Mawr, PA 19010	390139	06/27/2005	PA	
Banner Thunderbird Medical Center 5555 West Thunderbird Road Glendale, AZ 85306	030089	11/10/2005	AZ	
Calvert Memorial Hospital 100 Hospital Road Prince Frederick, MD 20678	210039	11/04/2005	MD	
Caritas St. Elizabeth's Medical Center 736 Cambridge Street Boston, MA 02135-2997	220036	04/26/2005	MA	
Carson Tahoe Regional Medical Center 1600 Medical Parkway Carson City, NV 89703	290010	08/04/2005	NV	P.O. Box 2168
Carolinas Medical Center 1000 Blythe Boulevard Charlotte, NC 28203	340113	06/29/2005	NC	
Cascade Healthcare Community 2500 N.E. Neff Road Bend, OR 97701	380047	05/03/2005	OR	Dba: St. Charles Medical Center Bend
Central Baptist Hospital 1740 Nicholasville Road Lexington, KY 40503	180103	04/27/2005	KY	
Central Dupage Hospital 25 North Winfield Road Winfield, IL 60190	140242	05/26/2005	IL	
Central Georgia Health Systems 777 Hemlock Street Macon, GA 31208	110107	05/11/2005	GA	Dba The Medical Center of Central Georgia
Charleston Area Medical Center 3200 MacCorkle Avenue, SE Charleston, WV 25304	510022	04/27/2005	WV	
The Christ Hospital 2139 Auburn Avenue Cincinnati, OH 45219	360163	05/26/2005	OH	
Charlotte Regional Medical Center 809 East Marion Avenue Punta Gorda, FL 33950	100047	05/11/2005	FL	
Christiana Care Health Services 4755 Ogletown-Stanton Road Newark, DE 19718-6001	080001	05/23/2005	DE	P.O. Box 6001
CHRISTUS Santa Rosa 333 North Santa Rosa Street San Antonio, TX 78207-3198	450237	08/26/2005	TX	
CHRISTUS Spohn Hospital Corpus Christi Shoreline 600 Elizabeth Street Corpus Christi, TX 78404	450046	11/10/2005	TX	
CHRISTUS St. Frances Cabrini Hospital 3330 Masonic Drive Alexandria, LA 71301	190019	04/18/2005	LA	
Ashtabula County Medical Center 2420 Lake Avenue Ashtabula, OH 44004	360125	11/18/2005	OH	
Carle Foundation Hospital 611 S. Park Street Urbana, IL 61801	140091	11/18/2005	IL	
CentraState Medical Center 901 W. Main Street Freehold, NJ 07728	310111	11/21/2005	NJ	
Christus St. Patrick Hospital Hospital 524 South Ryan Street Lake Charles, LA 70601	190027	07/20/2005	LA	
CJW Medical Center 7101 Jahnke Road Richmond, VA 23225	490112	05/03/2005	VA	
Clear Lake Regional Medical Center 500 Medical Center Boulevard Webster, TX 77598	450617	04/01/2005	TX	
Clarian Health Partners, Inc I-65 at 21st Street Indianapolis, IN 46206-1367	150056	05/23/2005	IN	P.O. Box 1367
Cleveland Clinic Hospital 3100 Weston Road Weston, FL 33331	100289	06/27/2005	FL	
The Cleveland Clinic Foundation 9500 Euclid Avenue Cleveland, OH 44195	360180	04/12/2005	OH	
College Station Medical Center 1604 Rock Prairie Road College Station, TX 77845	450299	05/25/2005	TX	
Columbia Hospital 2201 45th Street West Palm Beach, FL 33407	100234	08/09/2005	FL	
Columbia St. Mary's Hospital Milwaukee, Inc. 2323 North Lake Drive Milwaukee, WI 53211	520051	08/31/2005	WI	
Columbus Regional Healthcare System 710 Center Street Columbus, GA 31902	110064	10/27/2005	GA	P.O. Box 951
Comanche County Memorial Hospital 3401 West Gore Boulevard Lawton, OK 73502	370056	06/08/2005	OK	P.O. Box 129
Community Health Partners 3700 Kolbe Road Lorain, OH 44053-1697	360172	05/23/2005	OH	
Community Hospital 5637 Marine Parkway New Port Richey, FL 34656	100191	06/02/2005	FL	P.O. Box 996
Community Hospital 901 MacArthur Boulevard.Munster, IN 46321	150125	06/01/2005	IN	
Community Memorial Hospital W180 N8085 Town Hall Road Menomonee Falls, WI 53051	520103	06/14/2005	WI	
Community Memorial Hospital of San Buenaventura 147 North Brent Street Ventura, CA 93003-2854	050394	11/04/2005	CA	
Condell Medical Center 801 South Milwaukee Avenue Libertyville, IL 60048	140202	07/20/2005	IL	
Cooper University Hospital One Cooper Plaza Camden, NJ 08103-1489	310014	11/10/2005	NJ	
Covenant Health System 3615 19th Street Lubbock, TX 79410	450040	06/08/2005	TX	
Cox Medical Center South 3801 S. National Avenue Springfield, MO 65807	260040	06/02/2005	MO	

Facility	Provider Number	Effective Date	State	Additional Information
Crestwood Medical Center One Hospital Drive S.E. Huntsville, AL 35801	010131	06/14/2005	AL	
Dartmouth Hitchcock Medical Center One Medical Center Drive Lebanon, NH 03756	300003	04/27/2005	NH	Mary Hitchcock Memorial Hospital
Deaconess Medical Center PO Box 248 Spokane, WA 99210-0248	500044	05/10/2005	WA	
Decatur Memorial Hospital 2300 North Edward Street Decatur, IL 62526	140135	06/29/2005	IL	
Deborah Heart and Lung Center 200 Trenton Road Browns Mills, NJ 08015	310031	07/15/2005	NJ	
Delray Medical Center 5352 Linton Boulevard Delray Beach, FL 33484	100258	09/22/2005	FL	
Desert Springs Hospital 2075 East Flamingo Road Las Vegas, NV 89119	290022	09/22/2005	NV	
Doctors Community Hospital 8118 Good Luck Road Lanham, MD 20706-3596	210051	06/29/2005	MD	
Doctors Hospital at Renaissance 5501 S. McColl Road Edinburg, TX 78539	450869	06/07/2005	TX	
Doctors' Hospital of Opelousas 3983 I-49 South Service Road Opelousas, LA 70570	190191	11/21/2005	LA	
Doylestown Hospital 595 West State Street Doylestown, PA 18901	390203	04/27/2005	PA	
Duke Health Raleigh Hospital 3400 Wake Forest Road Raleigh, NC 27609	340073	07/07/2005	NC	
Duke University Medical Center P.O. Box 3808 Durham, NC 27710	340030	06/29/2005	NC	Department of Radiology
Durham Regional Hospital 3643 North Roxboro Road Durham, NC 27704	340155	08/26/2005	NC	
East Texas Medical Center-Tyler 1000 South Beckham Tyler, TX 75701	450083	09/28/2005	TX	
El Camino Hospital 2500 Grant Road Mountain View, CA 94039-7025	050308	05/10/2005	CA	P.O. Box 7025
Eastern Maine Medical Center 489 State Street Bangor, ME 04402-404	200033	04/18/2005	ME	P.O. Box 404
Eliza Coffee Memorial Hospital P.O. Box 818 Florence, AL 35631	010006	05/05/2005	AL	
Ellis Hospital 1101 Nott Street Schenectady, NY 12308	330153	09/22/2005	NY	
EMH Regional Medical Center 630 East River Street Elyria, OH 44035	360145	05/23/2005	OH	
Emory Crawford Long Hospital 550 Peachtree Street, NE Atlanta, GA 30308-2225	110078	05/16/2005	GA	
Emory University Hospital 1364 Clifton Road, NE Atlanta, GA 30322	110010	04/04/2005	GA	
Englewood Hospital and Medical Center 350 Engle Street Englewood, NJ 07631	310045	08/16/2005	NJ	
Erie County Medical Center Corporation 462 Grinder Street Buffalo, NY 14215	330219	07/15/2005	NY	
Erlanger Health System 975 East Third Street Chattanooga, TN 37403	440104	05/23/2005	TN	
Evanston Hospital 2650 Ridge Avenue Evanston, IL 60201	140010	03/30/2005	IL	
Exempla St. Joseph Hospital 1835 Franklin Street Denver, CO 80218-1191	060028	05/10/2005	CO	
Fairview Hospital 18101 Lorraine Avenue Cleveland, OH 44111	360077	08/09/2005	OH	
Fairview Southdale Hospital 6401 France Avenue Edina, MN 55435	240078	07/15/2005	MN	
Firelands Regional Medical Center 1101 Decatur Street Sandusky, OH 44870	360025	10/04/2005	OH	
FirstHealth Moore Regional Hospital 1555 Memorial Drive Pinehurst, NC 28374	340115	07/07/2005	NC	P.O. Box 3000
Fletcher Allen Health Care, Medical Center Campus 111 Colchester Avenue Burlington, VT 05401-1473	470003	05/26/2005	VT	
Florida Hospital Ormond Memorial 875 Sterthaus Avenue Ormond Beach, FL 32174	100068	07/20/2005	FL	
Florida Hospital 601 East Rollins Street Orlando, FL 32803	100007	06/07/2005	FL	
Foote Hospital 205 North East Avenue Jackson, MI 49201	230092	11/03/2005	MI	
Forrest General Hospital 6051 Highway 49 Hattiesburg, MS 39401-7243	250078	07/22/2005	MS	
Forsyth Medical Center 3333 Silas Creek Parkway Winston Salem, NC 27103	340014	04/20/2005	NC	
Fort Walton Beach Medical Center 1000 Mar Walt Drive Fort Walton Beach, FL 32547	100223	04/14/2005	FL	
Fort Sanders Regional Medical Center 1901 W. Clinch Avenue Knoxville, TN 37916-2398	440125	05/11/2005	TN	
Forum Health-Northside Medical Center 500 Gypsy Lane Youngstown, OH 44501	360141	08/09/2005	OH	Cardiovascular Administration
Frankford Hospital Frankford Avenue & Wakeling Street Philadelphia, PA 19124	390115	10/11/2005	PA	

Facility	Provider Number	Effective Date	State	Additional Information
Fresno Heart Hospital 15 E. Audubon Drive Fresno, CA 93720	050732	04/26/2005	CA	
Franklin Square Hospital Center 9000 Franklin Square Drive Baltimore, MD 21237-9986	210015	08/31/2005	MD	
Fountain Valley Regional Hospital and Medical Center 17100 Euclid Street Fountain Valley, CA 92708	050570	04/26/2005	CA	P.O. Box 8010
Freeman Health System 1102 West 32nd Street Joplin, MO 64804	260137	06/01/2005	MO	
Froedtert Memorial Lutheran Hospital 9200 West Wisconsin Avenue Milwaukee, WI 53226	520177	06/20/2005	WI	
Gadsden Regional Medical Center 1007 Goodyear Avenue Gadsden, AL 35903	010040	06/07/2005	AL	
Geisinger Medical Center 100 North Academy Avenue Danville, PA 17822	390006	05/05/2005	PA	
Galichia Heart Hospital 2610 N. Woodlawn Wichita, KS 67220-2729	170192	05/16/2005	KS	
Geisinger Wyoming Valley Medical Center 1000 East Mountain Boulevard Wilkes-Barre, PA 18711	390270	05/05/2005	PA	
The George Washington University Hospital 900 23rd Street, NW Washington, DC 20037	090001	07/07/2005	DC	
Glendale Adventist Medical Center 1509 Wilson Terrace Glendale, CA 91206	050239	07/27/2005	CA	
Good Samaritan Hospital 1225 Wilshire Boulevard Los Angeles, CA 90017	050471	04/12/2005	CA	
Good Samaritan Hospital 2425 Samaritan Drive San Jose, CA 95124	050380	04/12/2005	CA	
Good Samaritan Hospital 255 Lafayette Avenue Suffern, NY 10901	330158	04/27/2005	NY	
Good Samaritan Hospital 375 Dixmyth Avenue Cincinnati, OH 45220-489	360134	04/18/2005	OH	
Good Samaritan Hospital 2222 Philadelphia Drive Dayton, OH 45406-1891	360052	05/25/2005	OH	
Gratiot Medical Center 300 East Warwick Drive Alma, MI 48801-1096	230030	07/15/2005	MI	
Grandview Hospital and Medical Center 405 Grand Avenue Dayton, OH 45405	360133	05/05/2005	OH	
Greater Baltimore Medical Center 6701 N. Charles Street Baltimore, MD 21204	210044	05/11/2005	MD	
Greenville Memorial Hospital 701 Grove Road Greenville, SC 29605	420078	06/20/2005	SC	
The Griffin Hospital 130 Division Street Derby, CT 06418	070031	08/31/2005	CT	
Gwinnett Medical Center 1000 Medical Center Boulevard Lawrenceville, GA 30045	110087	08/31/2005	GA	
Hackensack University Medical Center 30 Prospect Avenue Hackensack, NJ 07601	310001	04/27/2005	NJ	
Halifax Medical Center 303 N. Clyde Morris Boulevard Daytona Beach, FL 32114	100017	08/24/2005	FL	
Hahnemann University Hospital/Tenet 230 N. Broad Street, Mailstop 119 Philadelphia, PA 19102-1192	390290	05/10/2005	PA	
Hamot Medical Center 201 State Street Erie, PA 16550	390063	05/05/2005	PA	
Hamilton Medical Center P.O. Box 1168 Dalton, GA 30722-1168	110001	07/22/2005	GA	
Harbor-UCLA Medical Center 1000 West Carson Street Torrance, CA 90502	050376	04/12/2005	CA	
Harbor Hospital 3001 South Hanover Street Baltimore, MD 21225-1290	210034	07/15/2005	MD	
Harlingen Medical Center 5501 South Expressway 77 Harlingen, TX 78550	450855	06/01/2005	TX	
Harborview Medical Center 325 Ninth Avenue Seattle, WA 98104-2499	500064	10/14/2005	WA	
Harris Methodist Forth Worth Hospital 1301 Pennsylvania Avenue Fort Worth, TX 76104	450135	04/20/2005	TX	
Harper-Hutzel Hospital 3990 John R Street Detroit, MI 48201	230104	04/19/2005	MI	
Harris Methodist HEB 1600 Hospital Parkway Bedford, TX 76022	450639	05/16/2005	TX	
Hays Medical Center 2220 Canterbury Road Hays, KS 67601	170013	05/23/2005	KS	
Hartford Hospital 80 Seymour Street Hartford, CT 06102-5037	070025	05/23/2005	CT	P.O. Box 5037
HCA Dauterive Hospital 600 North Lewis Avenue New Iberia, LA 70563	190003	08/22/2005	LA	
The Health Network of The Chester County Hospital 701 E. Marshall Street West Chester, PA 19380	390179	10/27/2005	PA	
HealthOne/HCA Rose Medical Center 4567 E. 9th Avenue Denver, CO 80220	060032	09/15/2005	CO	
Heart Hospital of Austin 3801 N. Lamar Boulevard Austin, TX 78756	450824	08/04/2005	TX	
Heart Hospital of Lafayette 1105 Kaliste Saloom Road Lafayette, LA 70508	190263	07/07/2005	LA	

Facility	Provider Number	Effective Date	State	Additional Information
Heartland Health 5325 Faraon Street St. Joseph, MO 64506-3398	260006	06/29/2005	MO	
Heart Hospital of New Mexico 504 Elm Street N.E. Albuquerque, NM 87102	320083	06/20/2005	NM	
Hennepin County Medical Center 701 Park Avenue Minneapolis, MN 55415-1829	240004	05/16/2005	MN	
Hendrick Medical Center 1900 Pine Street Abilene, TX 79601-2316	450229	08/01/2005	TX	
Henrico Doctors' Hospital 1602 Skipwith Road Richmond, VA 23229	490118	10/14/2005	VA	Forest Campus Administration
Henry Ford Hospital 2799 West Grand Boulevard Detroit, MI 48202	230053	11/21/2005	MI	
Hialeah Hospital 651 East 25th Street Hialeah, FL 33013	100053	05/05/2005	FL	
Heritage Valley Health System, The Medical Center 100 Dutch Ridge Road Beaver, PA 15009-9700	390036	07/22/2005	PA	
High Point Regional Health System 601 North Elm Street High Point, NC 27261	340004	05/16/2005	NC	P.O. Box HP-5
Hillcrest Hospital 6780 Mayfield Road Mayfield Hts., OH 44124	360230	05/16/2005	OH	
Hoag Memorial Hospital Presbyterian One Hoag Drive Newport Beach, CA 92663	050224	04/04/2005	CA	
Hillcrest Medical Center 1120 South Utica Avenue Tulsa, OK 74104	370001	08/26/2005	OK	
Holmes Regional Medical Center 1350 South Hickory Street Melbourne, FL 32901	100019	07/15/2005	FL	
The Hospital at Westlake Medical Center 5656 Bee Caves Road, Suite M-302 Austin, TX 78746	670006	11/18/2005	TX	
Holy Cross Hospital 4725 North Federal Highway Fort Lauderdale, FL 33308	100073	07/15/2005	FL	
Hospital of the University of Pennsylvania 3400 Spruce Street Philadelphia, PA 19104	390111	05/23/2005	PA	
Houston Northwest Medical Center 710 FM 1960 West Houston, TX 77090	450638	08/26/2005	TX	
Howard Regional Health System 3500 South Lafountain Street Kokomo, IN 46904-9011	150007	09/08/2005	IN	P.O. Box 9011
Hunterdon Medical Center 2100 Wescott Drive Flemington, NJ 08822	310005	04/12/2005	NJ	
Huntington Hospital 100 W. California Boulevard Pasadena, CA 91109-7013	050438	05/05/2005	CA	P.O. Box 7013
Huntsville Hospital 101 Sivley Road Huntsville, AL 35801	010039	06/07/2005	AL	
Iberia Medical Center 2315 East Main Street New Iberia, LA 70562-3338	190054	06/08/2005	LA	P.O. Box 13338
Indiana Heart Hospital 8075 North Shadeland Avenue Indianapolis, IN 46250	150154	08/04/2005	IN	
Ingham Regional Medical Center 401 West Greenlawn Avenue Lansing, MI 48910	230167	09/22/2005	MI	
Inova Alexandria Hospital 4320 Seminary Road Alexandria, VA 22304	490040	08/19/2005	VA	
INTEGRIS Baptist Medical Center, Inc. 3300 Northwest Expressway Oklahoma City, OK 73112	370028	06/29/2005	OK	
Irvine Regional Hospital & Medical Center 16200 Sand Canyon Avenue Irvine, CA 92618	050693	05/10/2005	CA	
Iowa Methodist Medical Center 1200 Pleasant Street Des Moines, IA 50309	160082	04/18/2005	IA	
Jackson Hospital 1725 Pine Street Montgomery, AL 36106-1109	010024	08/24/2005	AL	
Jackson Madison County General Hospital 708 West Forest Avenue Jackson, TN 38301-3956	440002	08/23/2005	TN	
Jewish Hospital 200 Abraham Flexner Way Louisville, KY 40202	180040	04/12/2005	KY	
JFK Medical Center 5301 South Congress Avenue Atlantis, FL 33462	100080	08/04/2005	FL	
John Muir Medical Center 1601 Ygnacio Valley Road Walnut Creek, CA 94598-3194	050180	05/10/2005	CA	
Johns Hopkins Hospital 600 North Wolfe Street Baltimore, MD 21287-1629	210009	07/07/2005	MD	
Jupiter Medical Center 1210 S. Old Dixie Hwy Jupiter, FL 33458	100253	04/20/2005	FL	
Kadlec Medical Center 888 Swift Boulevard Richland, WA 99352	500058	08/22/2005	WA	
Kaiser Foundation Hospital, Hawaii Region 3288 Moanalua Road Honolulu, HI 96819	120011	11/21/2005	HI	
Kaleida Health, Millard Fillmore Hospital 3 Gates Circle Buffalo, NY 14209	330005	05/03/2005	NY	
Kaiser Permanente San Diego Medical Center 4647 Zion Avenue San Diego, CA 92120	050515	10/27/2005	CA	Kaiser Foundation Hospital
Kansas Heart Hospital 3601 N. Webb Road Wichita, KS 67226	170186	05/23/2005	KS	
Kaweah Delta District Hospital 400 West Mineral King Visalia, CA 93291-6263	050057	10/27/2005	CA	

Facility	Provider Number	Effective Date	State	Additional Information
Kent Hospital 455 Toll Gate Road Warwick, RI 02886	410009	04/20/2005	RI	
King County Public Hospital District #1 400 South 43rd Street Renton, WA 98058-5010	500088	11/21/2005	WA	DBA: Valley Medical Center P.O. Box 50010
Kettering Medical Center 3535 Southern Boulevard Kettering, OH 45429	360079	05/05/2005	OH	
King's Daughters Medical Center 2201 Lexington Avenue Ashland, KY 41101	180009	05/23/2005	KY	
Kingman Regional Medical Center 3269 Stockton Hill Road Kingman, AZ 86401	030055	07/07/2005	AZ	
Lafayette General Medical Center 1214 Coolidge Street Lafayette, LA 70505	190002	07/07/2005	LA	P.O. Box 52009
Lahey Clinic Medical Center, Inc. 41 Mall Road Burlington, MA 01805	220171	07/27/2005	MA	
Lake Cumberland Regional Hospital 305 Langdon Street Somerset, KY 42503	180132	06/27/2005	KY	
Lakeland Hospital 1234 Napier Avenue St. Joseph, Mi 49085	230021	04/04/2005	MI	
Lakeland Regional Medical Center 1324 Lakeland Hills Boulevard Lakeland, FL 33805	100157	05/25/2005	FL	
Lakeview Regional Medical Center 95 E. Fairway Drive Covington, LA 70433	190177	05/03/2005	LA	
Lancaster Community Hospital 43830 10th Street West Lancaster, CA 93534	050204	08/22/2005	CA	
Lakewood Hospital 14519 Detroit Avenue Lakewood, OH 44107	360212	07/20/2005	OH	
Lancaster General Hospital 555 North Duke Street Lancaster, PA 17604-3555	390100	11/04/2005	PA	P.O. Box 3555
Lankenau Hospital 100 Lancaster Avenue Wynnewood, PA 19096	390195	06/14/2005	PA	
LaPorte Regional Health Systems 1007 Lincolnway LaPorte, IN 46352-0250	150006	11/21/2005	IN	P.O. Box 250
Lawnwood Medical Center, Inc 1700 South 23rd Street Fort Pierce, FL 34950	100246	04/20/2005	FL	d/b/a Lawnwood Regional Medical Center and Heart Institute
Intermountain Medical Center 5121 S. Cottonwood Street Murray, UT 84157	460010 NPI = 1043220650	04/20/2005	UT	
Lee's Summit Hospital 530 N.W. Murray Road Lee's Summit, MO 64081	260190	05/17/2005	MO	
Leesburg Regional Medical Center 600 E. Dixie Avenue Leesburg, FL 34748	100084	08/23/2005	FL	
Lehigh Valley Hospital 2545 Schoenersville Road Bethlehem, PA 18017	390263	06/29/2005	PA	Muhlenberg Campus
Lehigh Valley Hospital and Health Network Cedar Crest & I-78 Allentown, PA 18105	390133	06/08/2005	PA	Cedar Crest Campus P.O. Box 689
Lenox Hill Hospital 100 East 77 Street New York, NY 10021	330119	05/16/2005	NY	
Lexington County Health Services District, Inc. 2720 Sunset Boulevard West Columbia, SC 29169	420073	10/27/2005	SC	d/b/a Lexington Medical Center
Loma Linda University Medical Center 11234 Anderson Street Loma Linda, CA 92354	050327	07/20/2005	CA	P.O. Box 2000
Los Robles Hospital and Medical Center 215 West Janss Road Thousand Oaks, CA 91360	050549	05/16/2005	CA	
Louis A. Weiss Memorial Hospital 4646 North Marine Drive Chicago, IL 60640	140082	08/31/2005	IL	
Louisiana Heart Hospital 64030 Louisiana Highway 434 Lacombe, LA 70445	190250	04/01/2005	LA	
Lourdes Vascular Center 1530 Lone Oak Road Paducah, KY 42003	180102	03/30/2005	KY	Lourdes Hospital
Loyola University Medical Center 2160 South First Avenue Maywood, IL 60153	140276	05/05/2005	IL	
Luther Hospital 1221 Whipple Street Eau Claire, WI 54702-4105	520070	09/08/2005	WI	P.O. Box 4105
Lutheran Hospital of Indiana 7950 West Jefferson Boulevard Fort Wayne, IN 46804	150017	04/18/2005	IN	
Lynchburg General Hospital 1920 Atherholt Road Lynchburg, VA 24501-1104	490021	08/08/2005	VA	
Maimonides Medical Center 4802 Tenth Avenue Brooklyn, NY 11219	330914	09/28/2005	NY	
Maine Medical Center 22 Bramhall Street Portland, ME 04102-3175	200009	11/10/2005	ME	
Manatee Memorial Hospital and Health Systems 206 2nd Street East Bradenton, FL 34208	100035	07/07/2005	FL	
Marietta Memorial Hospital 401 Matthew Street Marietta, OH 45750	360147	08/24/2005	OH	
Maricopa Integrated Health System 2601 E. Roosevelt Phoenix, AZ 85008	030022	05/23/2005	AZ	Maricopa Medical Center Cardiac Catheterization Laboratory

Facility	Provider Number	Effective Date	State	Additional Information
Marion General Hospital 1000 McKinley Park Drive Marion, OH 43301	360011	07/15/2005	OH	
Martha Jefferson Hospital 459 Locust Avenue Charlottesville, VA 22902	490077	04/07/2005	VA	
Mary Greeley Medical Center 1111 Duff Avenue Ames, IA 50010	160030	03/30/2005	IA	
Mary Washington Hospital 1001 Sam Perry Boulevard Fredericksburg, VA 22401	490022	06/02/2005	VA	
Massachusetts General Hospital 55 Fruit Street Boston, MA 02114	220071	05/03/2005	MA	
McLaren Regional Medical Center 401 South Ballenger Highway Flint, MI 48532-3685	230141	06/29/2005	MI	
Mayo Clinic Hospital 5777 East Mayo Boulevard Phoenix, AZ 85054	030103	05/23/2005	AZ	
Meadowcrest Hospital 2500 Belle Chasse Highway Gretna, LA 70056	190152	08/24/2005	LA	
Mease Countryside Hospital 3231 McMullen Booth Road Safety Harbor, FL 34695	100265	07/15/2005	FL	
Medical Center East 50 Medical Park East Drive Birmingham, AL 35235	010011	11/21/2005	AL	
Medical Center Hospital P.O. Box 7239 Odessa, TX 79760-7239	450132	08/24/2005	TX	
Medical Center of Plano 3901 West 15th Street Plano, TX 75075	450651	05/16/2005	TX	
Medical College of Ohio 3000 Arlington Avenue Toledo, OH 43614	360048	04/27/2005	OH	
Medical University of South Carolina Hospital Authority 169 Ashley Avenue Charleston, SC 29425	420004	05/26/2005	SC	PO Box 250347
Memorial Hermann Hospital 6411 Fannin Street Houston, TX 77030	450068	11/21/2005	TX	
Memorial Health University Medical Center 4700 Waters Avenue Savannah, GA 31404	110036	06/02/2005	GA	
Memorial Herman Southwest Hospital 7600 Beechnut Street Houston, TX 77074	450184	11/03/2005	TX	
Memorial Hospital 1400 East Boulder Street Colorado Springs, CO 80909	060022	06/27/2005	CO	
Memorial Hospital Jacksonville 3625 University Boulevard, South Jacksonville, FL 32216	100179	04/27/2005	FL	
Memorial Hospital of South Bend 615 North Michigan Street South Bend, IN 46601	150058	10/11/2005	IN	
Memorial Medical Center 701 North First Street Springfield, IL 62781	140148	06/07/2005	IL	
Memorial Medical Center 2700 Napoleon Avenue New Orleans, LA 70115	190135	05/16/2005	LA	
Menorah Medical Center 5721 West 119th Street Overland Park, KS 66209	170182	06/27/2005	KS	
Conemaugh Valley Memorial Hospital DBA Memorial Medical Center 1086 Franklin Street Johnstown, PA 15905-4398	390110	10/04/2005	PA	
Mercy General Hospital 4001 J Street Sacramento, CA 95819-9990	050017	07/15/2005	CA	4001 J Street
Mercy Health Center 4300 West Memorial Road Oklahoma City, OK 73120-8304	370013	04/12/2005	OK	
Mercy Health System 1000 Mineral Point Avenue Janesville, WI 53547-5003	520066	07/07/2005	WI	P.O. Box 5003
Mercy Hospital 3663 South Miami Avenue Miami, FL 33133	100061	08/26/2005	FL	
Mercy Hospital 500 E. Market Street Iowa City, IA 52245	160029	05/05/2005	IA	
Mercy Hospital 144 State Street Portland, ME 04101	020008	08/09/2005	ME	
Mercy Hospital Fairfield 3000 Mack Road Fairfield, OH 45014	360056	05/17/2005	OH	
Mercy Hospital 4050 Coon Rapids Boulevard Coon Rapids, MN 55433	240115	08/22/2005	MN	
Mercy Hospitals Bakersfield 2215 Truxtun Avenue Bakersfield, CA 93302	050295	08/08/2005	CA	P.O. Box 119
Mercy Hospital and Medical Center 2525 South Michigan Avenue Chicago, IL 60616	140158	05/05/2005	IL	
Mercy Hospital of Pittsburgh 1400 Locust Street Pittsburgh, PA 15219-5166	390028	09/22/2005	PA	
Mercy Medical Center 701 10th Street SE Cedar Rapids, IA 52403	160079	04/07/2005	IA	
Mercy Medical Center 301 St. Paul Place Baltimore, MD 21202	210008	05/25/2005	MD	
Mercy Medical Center 1111 6th Avenue Des Moines, IA 50314	160083	04/12/2005	IA	
Mercy Medical Center 500 S. Oakwood Road Oshkosh, WI 54904-3370	520048	10/24/2005	WI	P.O. Box 3370
MeritCare Hospital 720 4th Street N Fargo, ND 58122	350011	10/04/2005	ND	P.O. Box MC

Facility	Provider Number	Effective Date	State	Additional Information
Meriter Hospitals, Inc. 202 South Park Street Madison, WI 53715	520089	08/23/2005	WI	
Mesa General Hospital 515 North Mesa Drive Mesa, AZ 85201	030017	09/28/2005	AZ	
Methodist Dallas Medical Center P.O. Box 655999 Dallas, TX 75265-5999	450051	10/14/2005	TX	
Methodist Hospital 300 West Huntington Drive Arcadia, CA 91066-6016	050238	04/12/2005	CA	P.O. Box 60016
The Methodist Hospital 6565 Fannin Street Houston, TX 77030	450358	07/07/2005	TX	
Methodist Medical Center of Illinois 221 Northeast Glen Oak Avenue Peoria, IL 61636-0002	140209	06/27/2005	IL	
Methodist Medical Center of Oak Ridge 990 Oak Ridge Turnpike Oak Ridge, TN 37830	440034	05/03/2005	TN	
Miami Valley Hospital One Wyoming Street Dayton, OH 45409-2793	360051	07/20/2005	OH	Medical Imaging
Mid Michigan Medical Center-Midland 4005 Orchard Drive Midland, MI 48670	230222	05/10/2005	MI	
Midwest Regional Medical Center 2825 Parklawn Drive Midwest City, OK 73110	370094	06/08/2005	OK	
Midland Memorial Hospital 2200 West Illinois Avenue Midland, TX 79701-6499	450133	09/06/2005	TX	
Milford Hospital 300 Seaside Avenue Milford, CT 06460-0815	070019	08/19/2005	CT	P.O. Box 3015
Mills-Peninsula Health Services 1783 El Camino Real Burlingame, CA 94010	050007	10/11/2005	CA	
Mission Hospital Regional Medical Center 27700 Medical Center Road Mission Viejo, CA 92691	050567	06/01/2005	CA	
The Miriam Hospital 164 Summit Avenue Providence, RI 02906	410012	10/24/2005	RI	
Mission Hospitals, Inc. 509 Biltmore Avenue Asheville, NC 28801	340002	06/14/2005	NC	
Missouri Baptist Medical Center 3015 N. Ballas Road St. Louis, MO 63131	260108	05/23/2005	MO	
Mobile Infirmary Medical Center Five Mobile Infirmary Circle Mobile, AL 36607	010113	08/16/2005	AL	
Mohawk Valley Vascular Center of Faxton 1656 Champlain Avenue Utica, NY 13502	330044	07/07/2005	NY	St. Luke's Healthcare
Morristown Memorial Hospital 100 Madison Avenue Morristown, NJ 07962-1956	310015	08/22/2005	NJ	
Montefiore Medical Center 111 East 210th Street New York, NY 10467	330059	08/22/2005	NY	
Morton Plant Hospital 300 Pinellas Street Clearwater, FL 33756	100127	05/16/2005	FL	
Morton Plant North Bay Hospital 6600 Madison Street New Port Richey, FL 34652	100063	11/21/2005	FL	
Moses H. Cone Memorial Hospital 1200 N. Elm Street Greensboro, NC 27401	340091	04/18/2005	NC	
Mountain States Health Alliance 400 North State of Franklin Road Johnson City, TN 37604-6094	440063	06/29/2005	TN	
Mount Carmel Health 793 West State Street Columbus, OH 43222	360035	06/08/2005	OH	(Mount Carmel East and Mount Carmel West)
Mount Carmel St. Ann's Hospital 500 South Cleveland Avenue Westerville, OH 43081-8998	360012	05/25/2005	OH	
Mount Diablo Medical Center 2540 East Street Concord, CA 94524-4110	050496	05/10/2005	CA	PO Box 4110
Mount Clemens General Hospital 1000 Harrington Boulevard Mount Clemens, MI 48043	230227	10/11/2005	MI	
The Mount Sinai Hospital 1 Gustave L. Levy Place New York, NY 10029	330024	05/26/2005	NY	
Mountain View Regional Medical Center 4311 E. Lohman Avenue Las Cruces, NM 88011	320085	04/26/2005	NM	
Mount Sinai Medical Center 4300 Alton Road Miami Beach, FL 33140	100034	04/07/2005	FL	
Munroe Regional Medical Center 1500 S.W. 1st Avenue Ocala, FL 34474	100062	05/23/2005	FL	
National Park Medical Center 1910 Malvern Avenue Hot Springs, AR 71901	040078	07/20/2005	AR	
Nazareth Hospital 2601 Holme Avenue Philadelphia, PA 19152	390204	10/27/2005	PA	
Nebraska Heart Hospital 7500 S. 91st Street Lincoln, NE 68526	280128	08/01/2005	NE	
New Hanover Regional Medical Center 2131 South 17th Street Wilmington, NC 28402-9000	340141	08/09/2005	NC	P.O. Box 9000
New York Presbyterian Hospital 161 Ft. Washington Avenue, HIP1412 New York, NY 10032	330101	05/05/2005	NY	525 E 68th Street, New York, NY 10021
New York Methodist Hospital 506 Sixth Street Brooklyn, NY 11215-9008	330236	11/18/2005	NY	
New York University Medical Center 550 First Avenue, HCC-15 New York, NY 10016-6481	330214	06/29/2005	NY	

Facility	Provider Number	Effective Date	State	Additional Information
Newark Beth Israel Medical Center 201 Lyons Avenue Newark, NJ 07112	310002	07/20/2005	NJ	
Norman Regional Hospital 901 North Porter,Box 1308 Norman, OK 73070-1308	370008	05/23/2005	OK	
Northeast Alabama Regional Medical Center Post Office Box 2208 Anniston, AL 36202	010078	11/10/2005	AL	
NorthEast Medical Center 920 Church Street, North Concord, NC 28025	340001	10/04/2005	NC	
Baltimore Washington Medical Center 301 Hospital Drive Glen Burnie, MD 21061	210043	06/20/2005	MD	
North Austin Medical Center 12221 MoPac Expressway North Austin, TX 78758	450809	04/12/2005	TX	
North Carolina Baptist Hospital Medical Center Boulevard Winston-Salem, NC 27157	340047	06/27/2005	NC	
North Florida Regional Medical Center 6500 Newberry Road Gainesville, FL 32605	100204	04/19/2005	FL	
North Memorial Health Care 3300 Oakdale Avenue North Robbinsdale, MN 55422 /td>	240001	05/26/2005	MN	
North Kansas City Hospital 2800 Clay Edwards Drive Kansas City, MO 64116	260096	10/14/2005	MO	
North Oakland Medical Centers 461 W. Huron Street Pontiac, MI 48341-1651	230013	05/03/2005	MI	
North Ridge Medical Center 5757 North Dixie Highway Ft. Lauderdale, FL 33334	100237	06/02/2005	FL	
The North Shore Medical Center 81 Highland Avenue Salem, MA 01970	220035	08/31/2005	MA	
North Shore University Hospital 300 Community Drive Manhasset, NY 11030	330105	06/14/2005	NY	
Northeast Georgia Medical Center 743 Spring Street Gainesville, GA 30501	110029	07/22/2005	GA	
Northeast Methodist Hospital 12412 Judson Road Live Oak, TX 78233	450388	05/11/2005	TX	
Northwest Medical Center 2801 North State Road 7 Margate, FL 33063-9002	100189	07/07/2005	FL	
Northwest Texas Healthcare System 1501 South Coulter Drive Amarillo, Texas 79106-1770	450209	06/08/2005	TX	
Norton Healthcare P.O. Box 35070 Louisville, KY 40232-5070	180088	05/03/2005	KY	
Northwestern Memorial Hospital 251 East Huron Street Chicago, IL 60611	140281	04/26/2005	IL	
St. Mary's Hospital Ozaukee, Inc. 13111 North Port Washington Road Mequon, WI 53097	520027	08/31/2005	WI	
St Mary's Medical Center 407 East Third Street Duluth, MN 55805	240002	05/16/2005	MN	
St. Mary's Medical Center 3700 Washington Avenue Evansville, IN 47740-001	150100	05/17/2005	IN	
St. Mary's Medical Center 2900 First Avenue Huntington, WV 25702	510007	07/27/2005	WV	
St. Patrick Hospital and Health Sciences Center 500 West Broadway Missoula, MT 59802	270014	04/12/2005	MT	
St. Peter's Hospital 315 South Manning Boulevard. Albany, NY 12208	330057	08/01/2005	NY	
St. Tammany Parish Hospital 1202 South Tyler Street Covington, LA 70433	190045	08/31/2005	LA	
St. Thomas Hospital 4220 Harding Road Nashville, TN 37205	440082	04/19/2005	TN	
St. Vincent Healthcare 1233 North 30th Street Billings, MT 59101	270049	06/07/2005	MT	
Oakwood Hospital and Medical Center 18101 Oakwood Boulevard Dearborn, MI 48123-2500	230020	07/07/2005	MI	P.O. Box 2500
St. Vincent Hospital 835 S. Van Buren Street Green Bay, WI 54307-3508	520075	07/07/2005	WI	P.O. Box 13508
St. Vincent Indianapolis Hospital 2001 West 86th Street Indianapolis, IN 46260	150084	07/20/2005	IN	
St. Vincent Medical Center 2800 Main Street Bridgeport, CT 06606	070028	10/27/2005	CT	
Ocean Medical Center 425 Jack Martin Boulevard Brick, NJ 08724	310052	08/16/2005	NJ	
St. Vincent's Hospital, Staten Island 355 Bard Avenue Staten Island, NY 10310	330028	09/12/2005	NY	
Ochsner Clinic Foundation 1514 Jefferson Highway New Orleans, LA 70121-2483	190036	04/12/2005	LA	Department of Cardiology
Ohio State University 452 West 10th Avenue Columbus, OH 43210	360085	05/05/2005	OH	University Medical Center
Ohio Valley Medical Center 2000 Eoff Street Wheeling, WV 26003	510039	06/07/2005	WV	
St. Vincent's Medical Center 1800 Barrs Street Jacksonville, FL 32204	100040	07/07/2005	FL	
Opelousas General Health System 539 E. Prudhomme Street Opelousas, LA 70570	190017	09/28/2005	LA	P.O. Box 1389
Oklahoma Heart Hospital 4050 West Memorial Road Oklahoma City, OK 73120	370215	05/23/2005	OK	

Facility	Provider Number	Effective Date	State	Additional Information
Oregon Health and Science University 3181 SW Sam Jackson Park Road, CR-131 Portland, OR 97239	380009	06/02/2005	OR	Oregon Stroke Center
Orlando Regional Healthcare System, Inc 1414 Kuhl Avenue Orlando, FL 32806	100006	05/23/2005	FL	
The Ortenzio Heart Center and Holy Spirit 503 North 21st Street Camp Hill, PA 17011-2288	390004	04/27/2005	PA	
Staten Island University Hospital 475 Seaview Avenue Staten Island, NY 10305-3498	330160	10/04/2005	NY	
Osceola Regional Medical Center 700 West Oak Street Kissimmee, FL 34745-8004	100110	06/27/2005	FL	P.O. Box 458004
OSF Saint Francis Medical Center 530 N.E. Glen Oak Avenue Peoria, IL 61637	140067	04/27/2005	IL	
OSF St. Joseph Medical Center 200 East Washington Street Bloomington, IL 61701	140162	08/16/2005	IL	
OU Medical Center 1200 Everett Drive Oklahoma City, OK 73104	370093	07/15/2005	OK	
Our Lady of Bellefonte Hospital St. Christopher Drive Ashland, KY 41101	180036	05/26/2005	KY	
Our Lady of the Lakes Regional Medical Center 5000 Hennessy Boulevard Baton Rouge, LA 70808	190064	08/19/2005	LA	
Our Lady of Fatima Hospital 200 High Service Avenue No. Providence, RI 02904	041005	09/08/2005	RI	
Our Lady of Lourdes Medical Center 1600 Haddon Avenue Camden, NJ 08103	310029	05/05/2005	NJ	
Our Lady of Lourdes Regional Medical Center 611 St. Landry Street Lafayette, LA 70506	190102	05/03/2005	LA	
Stormont-Vail HealthCare 1500 S.W. 10th Avenue Topeka, KS 66604-1353	170086	07/07/2005	KS	
Overlook Hospital 99 Beauvoir Avenue Summit, NJ 07802-0220	310051	06/29/2005	NJ	P.O. Box 220
Overlake Hospital Medical Center 1035 116th Avenue N.E. Bellevue, WA 98004	50051	06/20/2005	WA	
Strong Memorial Hospital 601 Elmwood Avenue Box 679 Rochester, NY 14642	330285	04/19/2005	NY	
Summa Health Systems 525 E. Market Street Akron, OH 44304-1698	360020	10/27/2005	OH	
Summit Hospital 17000 Medical Center Drive Baton Rouge, LA 70816	190202	08/19/2005	LA	
Sunrise Hospital and Medical Center Sunrise Children's Hospital 3186 South Maryland Parkway Las Vegas, NV 89109	290003	06/02/2005	NV	
Palm Beach Gardens Medical Center 3360 Burns Road Palm Beach Gardens, FL 33410	100176	06/27/2005	FL	
SUNY Stony Brook University Hospital Nicolls Road Stony Brook, NY 11794	330393	09/12/2005	NY	
Palmetto General Hospital 2001 West 68th Street Hialeah, FL 33016	100187	06/14/2005	FL	
Palmetto Health Richland 5 Richland Medical Park Drive Columbia, SC 29203-6897	420018	08/22/2005	SC	
Swedish American Hospital 1401 East State Street Rockford, IL 61104	140228	05/03/2005	IL	
Palomar Medical Center 555 East Valley Parkway Escondido, CA 92025	050115	05/10/2005	CA	
Parkwest Medical Center 9352 Park West Boulevard Knoxville, TN 37923	440173	05/05/2005	TN	
Swedish Medical Center 501 East Hampden Avenue Englewood, CO 80113	060034	05/16/2005	CO	
Parma Community General Hospital 7007 Powers Boulevard Parma, OH 44129-5495	360041	05/05/2005	OH	
Parkview Hospital 2200 Randallia Drive Fort Wayne, IN 46805	150021	05/11/2005	IN	
Swedish Medical Center-First Hill Campus 747 Broadway Seattle, WA 98122	500027	05/17/2005	WA	
Swedish Medical Center-Providence Campus 747 Broadway Seattle, WA 98122	500025	05/23/2005	WA	
Penn State Milton S. Hershey Medical Center 500 University Drive Hershey, PA 17033	390256	06/20/2005	PA	
Pennsylvania Hospital of the University of Pennsylvania Health System 800 Spruce Street Philadelphia, PA 19071-6192	390226	07/15/2005	PA	
Phoenix Baptist Hospital 2000 West Bethany Home Road Phoenix, AZ 85015	030030	04/01/2005	AZ	Cardiac Catheterization Laboratory/ Interventional Radiology Suite
Phoenix Memorial Hospital 1201 South 7th Avenue Phoenix, AZ 85007	030106	05/16/2005	AZ	Cardiac Catheterization Laboratory/ Interventional Radiology Suite
Piedmont Hospital 1968 Peachtree Road, N.W. Atlanta, GA 30309	110083	06/01/2005	GA	
Pinnacle Health Hospitals 111 South Front Street Harrisburg, PA 17101	390067	05/23/2005	PA	

Facility	Provider Number	Effective Date	State	Additional Information
Pitt County Memorial Hospital, Inc. P.O. Box 6028 Greenville, NC 27835-6028	340040	09/08/2005	NC	
Pomerado Hospital 15615 Pomerado Road Poway, CA 92064	050636	05/10/2005	CA	
Plaza Medical Center of Fort Worth 900 Eighth Avenue Fort Worth, TX 76104	450672	05/23/2005	TX	
Pomona Valley Hospital Medical Center 1798 North Garey Avenue Pamona, CA 91767	050231	06/20/2005	CA	
Poplar Bluff Regional Medical Center 2620 North Westwood Boulevard Poplar Bluff, MO 63901	260119	08/23/2005	MO	
Portsmouth Regional Hospital 333 Borthwick Avenue Portsmouth, NH 03802-7004	300029	06/01/2005	NH	P.O. Box 7004
The Pottsville Hospital and Warne Clinic 420 South Jackson Street Pottsville, PA 17901	390030	09/22/2005	PA	
Presbyterian Healthcare 200 Hawthorne Lane Charlotte, NC 28204	340053	10/04/2005	NC	
Presbyterian Hospital of Dallas 8200 Walnut Hill Lane Dallas, TX 75231-4496	450462	05/10/2005	TX	
Presbyterian Healthcare Services P.O. Box 26666 Albuquerque, NM 87125-6666	320021	06/27/2005	NM	
Princeton Baptist Medical Center 701 Princeton Avenue, SW Birmingham, AL 35211-1399	010103	04/12/2005	AL	
Provena Mercy Medical Center 1325 North Highland Avenue Aurora, IL 60506	140174	07/15/2005	IL	
Provena Saint Joseph Hospital 77 North Airlite Street Elgin, IL 60123-4912	140217	05/11/2005	IL	
Provena St. Mary's Hospital 500 West Court Street Kankakee, IL 60901	140155	06/01/2005	IL	
Provena Saint Joseph Medical Center 333 North Madison Street Joliet, IL 60435-6595	140007	09/06/2005	IL	
Providence Health Center 6901 Medical Parkway Waco, TX 76712	450042	09/15/2005	TX	
Providence Alaska Medical Center 3200 Providence Drive Anchorage, AK 99519-6604	020001	06/07/2005	AK	P.O. Box 196604
Providence Portland Medical Center 4805 Northeast Glisan Street Portland, OR 97213-2967	380061	05/16/2005	OR	
Providence Hospital 16001 West Nine Mile Road Southfield, MI 48075	230019	06/27/2005	MI	
Providence St. Peter Hospital 413 Lilly Road Northeast Olympia, WA 98506-5166	500024	06/20/2005	WA	
Providence St. Vincent Medical Center 9205 S.W. Barnes Road Portland, OR 97225	380004	05/16/2005	OR	
Rapid City Regional Hospital 353 Fairmont Boulevard Rapid City, SD 57701	430077	05/26/2005	SD	
Rapides Regional Medical Center 211 Fourth Street Alexandria, LA 71301-8454	190026	05/23/2005	LA	Box 30101
Reading Hospital and Medical Center PO Box 16052 Reading, PA 19612-6052	390044	07/15/2005	PA	
Regional Medical Center of San Jose 225 North Jackson Avenue San Jose, CA 95116-1691	050125	11/03/2005	CA	
Regional Medical Center Bayonet Point 14000 Fivay Road Hudson, FL 34667	100256	06/20/2005	FL	
Regional Medical Center of Hopkins County 900 Hospital Drive Madisonville, KY 42431	180093	07/15/2005	KY	
Regions Hospital 640 North Jackson Street St. Paul, MN 55101	240106	10/04/2005	MN	
Research Medical Center 2316 East Meyer Boulevard Kansas City, MO 64132	260027	05/23/2005	MO	
Resurrection Medical Center 7435 West Talcott Avenue Chicago Illinois, 60631	140117	04/12/2005	IL	
REX Healthcare 4420 Lake Boone Trail Raleigh, NC 27607	340114	08/24/2005	NC	
Rhode Island Hospital 593 Eddy Street Providence, RI 02903	041007	07/07/2005	RI	
Riverside Medical Center 350 North Wall Street Kankakee, IL 60901	140186	06/02/2005	IL	
Riverside Methodist Hospital 3535 Olentangy River Road Columbus, OH 43214	360006	04/20/2005	OH	
Robert Packer Hospital One Guthrie Square Sayre, PA 18840-1698	390079	04/18/2005	PA	
Rockford Memorial Hospital 2400 North Rockton Avenue Rockford, IL 61103	140239	06/14/2005	IL	
Robert Wood Johnson University Hospital One Robert Wood Johnson Place New Brunswick, NJ 08903-2601	310038	10/21/2005	NJ	P.O. Box 2601
Rogue Valley Medical Center 2825 East Barnett Road Medford, OR 97504	380018	05/05/2005	OR	
Rush-Copely Medical Center 2000 Ogden Avenue Aurora, IL 60504	140029	11/18/2005	IL	
Rush University Medical Center 1725 West Harrison Street, Suite 364 Chicago, IL 60612-3824	140119	04/20/2005	IL	
Sacred Heart Health System 5151 N. Ninth Avenue Pensacola, FL 32513	100025	05/05/2005	FL	P.O. Box 2700

Facility	Provider Number	Effective Date	State	Additional Information
Sacred Heart Medical Center 101 West 8th Avenue Spokane, WA 99220-2555	500054	07/15/2005	WA	P.O. Box 2555
Sacred Heart Medical Center 1255 Hilyard Street Eugene, OR 97440	380033	05/26/2005	OR	Oregon Heart & Vascular Institute P.O. Box 10905
Saint Agnes Medical Center 1303 East Herndon Avenue Fresno, CA 93720	050093	10/04/2005	CA	
Saint Barnabas Medical Center Old Short Hills Road Livingston, NJ 07039	310076	08/26/2005	NJ	
Saint Elizabeth Regional Medical Center 555 South 70th Street Lincoln, NE 68510	280020	08/22/2005	NE	
Saint Francis Hospital 6161 South Yale Avenue Tulsa, OK 74136	370091	06/14/2005	OK	
Saint Francis Hospital 241 North Road Poughkeepsie, NY 12601-1399	330067	08/23/2005	NY	
Saint Francis Medical Center 211 Saint Francis Drive Cape Girardeau, MO 63703-8399	260183	10/04/2005	MO	
Saint Francis Hospital 5959 Park Avenue Memphis, TN 38199-5198	440183	06/20/2005	TN	
Saint Joseph Health Center 1000 Carondelet Drive Kansas City, MO 64114	260085	05/16/2005	MO	
Saint Joseph Hospital One Saint Joseph Drive Lexington, KY 40504	180010	07/27/2005	KY	
Saint Joseph's Hospital 611 St. Joseph Avenue Marshfield, WI 54449-1898	520037	06/08/2005	WI	
Saint Joseph's Hospital of Atlanta 5665 Peachtree, Dunwoody Road N.E. Atlanta, GA 30342-1764	110082	06/08/2005	GA	
Saint Joseph Medical Center 601 North 30th Street Omaha, NE 68131-2197	280030	06/27/2005	NE	Creighton University Medical Center
Saint Joseph Medical Center 2500 Bernville Road P.O. Box 316 Reading, PA 19605	390096	04/01/2005	PA	P.O. Box 316
Saint Louis University Hospital 3635 Vista at Grand Boulevard St. Louis, MO 63110	260105	05/17/2005	MO	P.O. Box 15250
Saint Luke's Hospital of Kansas City 4401 Wornall Road Kansas City, MO 64111	260138	04/27/2005	MO	
Saint Marys Hospital 1216 Second Street S.W. Rochester, MN 55902	240010	06/29/2005	MN	
Saint Michael's Medical Center 111 central Avenue Newark, N.J. 07102	310096	06/01/2005	NJ	
Saint Raphael Healthcare System 1450 Chapel Street New Haven, CT 06511	070001	05/05/2005	CT	
Saints Memorial Medical Center 1 Hospital Drive Lowell, MA 01852-1389	220082	04/27/2005	MA	
Salina Regional Health Center P.O. Box 5080 Salina, KS 67402-5080	170012	07/20/2005	KS	
Salinas Valley Memorial Healthcare System 450 E. Romie Lane Salinas, CA 93901	050334	09/06/2005	CA	
San Ramon Regional Medical Center 6001 Norris Canyon Road San Ramon, CA 94583	050689	06/07/2005	CA	
Samaritan Hospital 310 South Limestone Street Lexington, KY 40508	180007	05/17/2005	KY	
Santa Barbara Cottage Hospital Pueblo at Bath Street Santa Barbara, CA 93102-0689	050396	11/21/2005	CA	Post Office Box 689
Sarasota Memorial Hospital 1700 S. Tamiami Trail Sarasota, FL 34239	100087	06/29/2005	FL	
Scott and White Memorial Hospital and Scott, Sherwood and Brindley Foundation 2401 South 31st Street Temple, TX 76508	450054	07/20/2005	TX	
Scripps Green Hospital 10666 North Torrey Pines Road La Jolla, CA 92037-9100	050424	07/07/2005	CA	
Scripps Memorial Hospital La Jolla 9888 Genesee Avenue La Jolla, CA 92037	050324	06/20/2005	CA	
Scripps Mercy Hospital 4077 Fifth Avenue San Diego, CA 92103	050077	07/15/2005	CA	
Sentara Norfolk General Hospital 600 Gresham Drive Norfolk, VA 23507	490007	07/20/2005	VA	
Sequoia Hospital 170 Alameda de las Pulgas Redwood City, CA 94062	050197	06/14/2005	CA	
Seton Medical Center 1900 Sullivan Avenue Daly City, CA 94015	050289	05/05/2005	CA	
Seton Medical Center 1201 West 38th Street Austin, TX 78705-1056	450056	06/14/2005	TX	
Seven Rivers Regional Medical Center 6201 North Suncoast Boulevard Crystal River, FL 34428-6712	100249	06/20/2005	FL	
Shady Grove Adventist Hospital 9901 Medical Center Drive Rockville, MD 20850	210057	04/20/2005	MD	
Shands Hospital at the University of Florida P.O. Box 100326 Gainesville, FL 32610-0326	100113	06/29/2005	FL	
Shands Jacksonville Medical Center 655 West Eighth Street Jacksonville, FL 32209	100001	05/26/2005	FL	
Sharp Chula Vista Medical Center 751 Medical Center Court Chula Vista, CA 91911-6699	050222	10/24/2005	CA	

Facility	Provider Number	Effective Date	State	Additional Information
Sharp Grossmont Hospital P.O. Box 158 La Mesa, CA 91944-0158	050026	08/09/2005	CA	
Sharp Memorial Hospital 7901 Frost Street San Diego, CA 92123	050100	10/27/2005	CA	
Shasta Regional Medical Center 1100 Butte Street Redding, CA 96001	050733	06/27/2005	CA	
Shawnee Mission Medical Center 9100 W. 74th Street Shawnee Mission, KS 66204	170104	05/16/2005	KS	
Sherman Health 934 Center Street Elgin, IL 60120	140030	11/18/2005	IL	
Sierra Medical Center 1625 Medical Center Drive El Paso, TX 79902	450668	05/16/2005	TX	
Sinai-Grace Hospital 6071 W. Outer Drive Detroit, MI 48235	230024	04/19/2005	MI	
Singing River Hospital System 3109 Bienville Boulevard. Ocean Springs, MS 39564	250040	08/01/2005	MS	
Sanford Medical Center 1305 W. 18th Street Sioux Falls, SD 57117-5039	430027	04/19/2005	SD	
Sisters of Charity Hospital 2157 Main Street Buffalo, NY 14214	330078	06/29/2005	NY	
Sisters of Charity Providence Hospitals 2435 Forest Drive Columbia, SC 29204	420026	07/15/2005	SC	
Tallahassee Memorial 1300 Miccosukee Road Tallahassee, FL 32308	100135	05/16/2005	FL	
Skyline Medical Center 3441 Dickerson Pike Nashville, TN 37207	440006	04/07/2005	TN	
South Austin Hospital 901 W. Ben White Austin, TX 78704	450713	04/12/2005	TX	
Tampa General Hospital 2 Columbia Drive Tampa, FL 33606	100128	09/22/2005	FL	
South Jersey Healthcare 1505 West Sherman Avenue Vineland, NJ 08360	310032	06/27/2005	NJ	
Tenet Health System 222 South Herlong Avenue Rock Hill, SC 29732	420002	06/14/2005	SC	D/B/A Piedmont Medical Center
Terrebonne General Medical Center 8166 Main Street Houma, LA 70360	190008	04/20/2005	LA	
Texan Heart Hospital 6700 IH-10 West San Antonio, TX 78201	450878	05/26/2005	TX	
South Pointe Hospital 20000 Harvard Road Warrensville Hts., OH 44122	360144	08/31/2005	OH	
Theda Clark Medical Center 130 2nd Street Neenah, WI 54957-2021	520045	06/14/2005	WI	P.O. Box 2021
Thomas Jefferson University Hospital 111 South 11th Street Philadelphia, PA 19107	390174	06/08/2005	PA	
The Toledo Hospital 2124 N. Cove Boulevard Toledo, OH 43606	360068	10/27/2005	OH	
SouthCrest Hospital 8801 South 101st East Avenue Tulsa, OK 74133	370202	10/11/2005	OK	
Southern Baptist Hospital of Florida, Inc. 800 Prudential Drive Jacksonville, FL 32207	100088	05/05/2005	FL	d/b/a Baptist Medical Center
Southern Maryland Hospital Center 7503 Surratts Road Clinton, MD 20735	520054	05/26/2005	MD	
Southern Ohio Medical Center 1895 27th Street Portsmouth, OH 45662	360008	09/28/2005	OH	
Torrance Memorial Medical Center 3330 Lomita Boulevard Torrance, CA 90505-5073	050351	08/09/2005	CA	
Tomball Regional Hospital 605 Holderrieth Street Tomball, TX 77375	450670	07/07/2005	TX	
Town and Country Hospital 6001 Webb Road Tampa, FL 33615-3241	100255	05/05/2005	FL	
Southwest Medical Center - Lafayette 2810 Ambassador Caffery Lafayette, LA 70506	190205	08/31/2005	LA	
Trident Medical Center 9330 Medical Plaza Drive Charleston, SC 29406	420079	06/27/2005	SC	
Trinity Medical Center Terrace Park 4500 Utica Ridge Road Bettendorf, IA 52722	160104	08/31/2005	IA	
Southwest Mississippi Regional Medical Center 215 Marion Avenue McComb, MS 39648	250097	09/22/2005	MS	
Trinity Medical Center, West Campus 2701 17th Street Rock Island, IL 61201	140280	06/14/2005	IL	
Southwest Washington Medical Center Vancouver, WA 98668	500050	05/26/2005	WA	P.O. Box 1600
Trinity Mother Frances Health System 800 E. Dawson Tyler, TX 75701	450102	07/07/2005	TX	
Tucson Medical Center 5301 East Grant Road Tucson, AZ 85712	030006	07/15/2005	AZ	
Tulsa Regional Medical Center 744 West 9th Street Tulsa, OK 74127	370078	07/20/2005	OK	
Sparks Regional Medical Center 1311 South I Street Fort Smith, AR 72917-7006	040055	09/22/2005	AR	P.O. Box 17006
Spartanburg Regional Medical Center 101 East Wood Street Spartanburg, SC 29303	420007	07/20/2005	SC	

Facility	Provider Number	Effective Date	State	Additional Information
Spectrum Health Hospital 100 Michigan Street NE Grand Rapids, MI 49503	230038	04/18/2005	MI	
Springhill Medical Center 3710 Dauphine Street Mobile, AL 36608	010144	08/22/2005	AL	
SSM St. Joseph Health Center 300 First Capitol Drive St. Charles, MO 63301	260005	04/26/2005	MO	
St. Alexius Medical Center 900 E. Broadway Avenue Bismark, ND 58506-5510	350002	06/14/2005	ND	P.O. Box 5510
St. Anthony Hospital 1000 North Lee Street Oklahoma City, OK 73101	370037	06/20/2005	OK	
St. Anthony's Hospital 1200 7th Avenue North St. Petersburg, FL 33705	100067	04/19/2005	FL	
UAMS Medical Center 4301 West Markham Street Little Rock, AR 72205-7199	040016	08/31/2005	AR	
UC Davis Medical Center 2315 Stockton Boulevard Sacramento, CA 95817	050599	04/19/2005	CA	
UCI Medical Center 101 The City Drive South Orange, CA 92868	050348	08/04/2005	CA	
St. Anthony's Medical Center 10010 Kennerly Road St. Louis, MO 63128	260077	06/01/2005	MO	
UCLA Medical Center 10833 Le Conte Avenue Los Angeles, CA 90095-1730	050262	07/15/2005	CA	
St. Bernardine Medical Center 2101 N. Waterman Avenue San Bernardino, CA 92404-4836	050129	05/05/2005	CA	
UHHS Geauga Regional Hospital 13207 Ravenna Road Chardon, OH 44024	360192	09/06/2005	OH	
St. Bernards Medical Center 225 E. Jackson Avenue Jonesboro, AR 72401	040020	06/07/2005	AR	
UHHS University Hospitals of Cleveland 11100 Euclid Avenue Cleveland, OH 44106-5006	360137	10/04/2005	OH	
Union Hospital 1606 North Seventh Street Terre Haute, IN 47804-2780	150023	04/27/2005	IN	
Union Memorial Hospital 201 East University Parkway Baltimore, MD 21218-2895	210024	04/07/2005	MD	
United Regional Health Care System 1600 Eleventh Street Wichita Falls, TX 76301	450010	05/16/2005	TX	Eleventh Street Campus
St. Catherine Hospital 4321 Fir Street East Chicago, IN 46312	150008	10/11/2005	IN	
Unity Health System 1555 Long Pond Road Rochester, NY 14626	330226	06/08/2005	NY	Park Ridge Hospital
Unity Hospital 550 Osborne Road Fridley, MN 55432	240132	08/22/2005	MN	
St. Clair Hospital 1000 Bower Hill Road Pittsburgh, PA 15243	390228	11/04/2005	PA	
University Community Hospital, Inc. 3100 East Fletcher Avenue Tampa, FL 33613	100173	10/14/2005	FL	
University Health System 1520 Cherokee Trail, Suite 200 Knoxville, TN 37920-2205	440015	05/26/2005	TN	
University Health System 4502 Medical Drive San Antonio, TX 78229	450213	04/27/2005	TX	
Saint Clare's Hospital 25 Pocono Road Denville, NJ 07834	310050	11/18/2005	NJ	
University Hospital 1350 Walton Way Augusta, GA 30901-2629	110028	10/21/2005	GA	
University Hospital 234 Goodman Street 700 Cincinnati, OH 45219	360003	10/11/2005	OH	
University Hospital 750 East Adams Street Syracuse, NY 13210	330241	07/20/2005	NY	SUNY Upstate Medical
St. Cloud Hospital 1406 Sixth Avenue North St. Cloud, MN 56303-1901	240036	07/07/2005	MN	
University of Alabama Hospital 619 South 19th Street Birmingham, AL 35233	010033	05/26/2005	AL	
St. David's Medical Center 919 East 32nd Street 78705 Austin , TX 78765-4039	450431	05/05/2005	TX	P.O. Box 4039
University of California San Diego Medical Center 200 W. Arbor Drive San Diego, CA 92103	050025	10/24/2005	CA	
UCSF Medical Center 500 Parnassus Avenue San Francisco, CA 94143-0296	050454	08/01/2005	CA	
University of Colorado Hospital 4200 East 9th Avenue Denver, CO 80262	060024	07/15/2005	CO	
University of Connecticut Health Center 263 Farmington Avenue Farmington, CT 06030	070036	06/14/2005	CT	John Dempsey Hospital
St. Edward Mercy Medical Center 7301 Rogers Avenue Fort Smith, AR 72917-7000	040062	09/15/2005	AR	P.O. Box 17000
University of Illinois Medical Center at Chicago 1740 West Taylor Street, Suite 1400 Chicago, IL 60612	140150	10/11/2005	IL	
St. Elizabeth Hospital 1506 South Oneida Street Appleton, WI 54915	520009	11/01/2005	WI	
St. Elizabeth Medical Center South Unit 1 Medical Village Drive Edgewood, KY 41017	180035	04/26/2005	KY	
St. Francis Hospital 100 Port Washington Boulevard Roslyn, NY 11576-1348	330182	06/01/2005	NY	

Facility	Provider Number	Effective Date	State	Additional Information
St. Francis Hospital 3237 South 16th Street Milwaukee, WI 53215-4592	520078	07/20/2005	WI	
University of Iowa Hospitals and Clinics 200 Hawkins Drive Iowa City, IA 52242	160058	06/27/2005	IA	
St. Francis Hospital and Health Center 12935 S. Gregory Street Blue Island, IL 60406	140118	05/11/2005	IL	
St. Francis Hospital & Health Centers 1600 Albany Street Beech Grove, IN 46107	150033	04/01/2005	IN	St. Francis Cardiac & Vascular Care Center; CAS procedures moved to 8111 S. Emerson Ave
St. Francis Hospital and Medical Center 114 Woodland Street Hartford, CT 06105	070002	06/08/2005	CT	
University Medical Center 1501 N. Campbell Avenue Tucson, AZ 85724	030064	06/01/2005	AZ	
University of Kentucky Hospital 800 Rose Street Lexington, KY 40536-0293	180067	05/16/2005	KY	
University Medical Center 602 Indiana Avenue Lubbock, TX 79415	450686	06/29/2005	TX	
St. Francis Medical Center 309 Jackson Street Monroe, LA 71210-1901	190125	10/04/2005	LA	P.O. Box 1901
St. John Hospital and Medical Center 22151 Moross Road Detroit, MI 48236	230165	04/27/2005	MI	
University of Louisville Hospital 530 South Jackson Street Louisville, KY 40202	180141	05/05/2005	KY	
University of Michigan Health System 1500 E. Medical Center Drive Ann Arbor, MI 48109-0060	230046	08/19/2005	MI	
University of Pennsylvania Medical Center Presbyterian 39th and Market Streets Philadelphia, PA 19104	390223	04/01/2005	PA	
University of Wisconsin Hospitals and Clinics 600 Highland Avenue Madison, WI 53792	520098	06/20/2005	WI	
UPMC Presbyterian Shadyside 200 Lothrop Street Pittsburgh, PA 15213	390164	05/03/2005	PA	
St. John Medical Center 1923 South Utica Avenue Tulsa, OK 74104	370114	11/21/2005	OK	
USC University Hospital 1500 San Pablo Street Los Angeles, CA 90033	050696	10/24/2005	CA	
Utah Valley Regional Medical Center 1034 North 500 West Provo, Utah 84605	460001	05/26/2005	UT	
St John's Hospital 800 East Carpenter Street Springfield, IL 62769	140053	05/10/2005	IL	
UT Southwestern University Hospitals - Zale Lipshy 5151 Harry Hines Boulevard Dallas, TX 75390	450766	07/20/2005	TX	
St. John's Mercy Medical Center 615 South New Ballas Road St. Louis, MO 63141	260020	08/24/2005	MO	
UT Southwestern University Hospitals - St. Paul 5909 Harry Hines Boulevard Dallas, TX 75390	450044	07/20/2005	TX	
St. John's Regional Health Center 1235 East Cherokee Street Springfield, MO 65804-2263	260065	06/14/2005	MO	
St. John's Regional Medical Center 2727 McClelland Boulevard Joplin, MO 64804-1694	260001	04/19/2005	MO	
St. John West Shore Hospital 29000 Center Ridge Road Westlake, OH 44145	360123	05/03/2005	OH	
St. Joseph Hospital 1100 West Stewart Drive Orange, CA 92863-5600	050069	08/04/2005	CA	P.O. Box 5600
St. Joseph Hospital 2901 Squalicum Parkway Bellingham, WA 98264	500030	09/28/2005	WA	
St. Joseph Medical Center Heart Institute 7601 Osler Drive Towson, MD 21204-7582	210007	05/17/2005	MD	
St. Joseph Mercy Hospital 5301 E. Huron River Drive Ann Arbor, MI 48106	230156	05/16/2005	MI	P.O. Box 995
St. Joseph Mercy Oakland 44405 Woodward Avenue Pontiac, Michigan 48341-5023	230029	06/01/2005	MI	
St. Joseph Regional Medical Center 5000 West Chambers Street Milwaukee, WI 53210-1688	520136	05/10/2005	WI	
St. Joseph's Hospital 3001 W. Dr. M.L. King Jr. Boulevard Tampa, FL 33607	100075	09/15/2005	FL	
St. Joseph's Hospital 11705 Mercy Boulevard Savannah, GA 31419	110043	09/22/2005	GA	
St. Joseph's Hospital 69 West Exchange Street St. Paul, MN 55102	240063	06/27/2005	MN	
St. Joseph's Hospital and Medical Center 350 West Thomas Road Phoenix, AZ 85013	030024	06/20/2005	AZ	
St. Joseph's Medical Center 1800 N. California Street Stockton, CA 95204	050084	05/17/2005	CA	
St. Joseph's Mercy Health Center 300 Werner Street Hot Springs, AR 71903	040026	05/26/2005	AR	
St. Joseph's Regional Medical Center 703 Main Street Paterson, NJ 07530	310019	07/07/2005	NJ	
St. Joseph's Wayne Hospital 224 Hamburg Turnpike Wayne, NJ 07470	310116	03/30/2005	NJ	

Facility	Provider Number	Effective Date	State	Additional Information
St. Elizabeth Florence 4900 Houston Road Florence, KY 41042	180045	11/03/2005	KY	
St. Luke's 915 East First Street Duluth, MN 55805	240047	04/19/2005	MN	
St. Luke's Cornwall Hospital 70 Dubois Street Newburgh, NY 12550	330264	08/04/2005	NY	
Valley Baptist Medical Center - Harlingen 2101 Pease Street Harlingen, TX 78551	450033	08/31/2005	TX	P.O. Drawer 2588
The Valley Hospital 223 N. Van Dien Avenue Ridgewood, NJ 07450-2736	310012	04/20/2005	NJ	
St. Lukes Episcopal Hospital 6720 Bertner Avenue Houston, TX 77030	450193	03/30/2005	TX	
Vanderbilt University Medical Center D-3300 Medical Center North Nashville, TN 37232-2104	440039	06/29/2005	TN	
Vassar Brothers Medical Center 45 Reade Place Poughkeepsie, NY 12601	330023	05/05/2005	NY	
Venice Regional Medical Center 540 The Rialto Venice, FL 34285	100070	06/27/2005	FL	
St. Luke's Hospital 4201 Belfort Road Jacksonville, FL 32216-5898	100151	06/29/2005	FL	
Via Christi Regional Medical Center 929 N. St. Francis Wichita, KS 67214-3882	170122	10/21/2005	KS	
Virginia Hospital Center 1701 N. George Mason Drive Arlington, VA 22205-3698	490050	11/10/2005	VA	
St. Luke's Hospital 1026 A Avenue NE Cedar Rapids, IA 52406-3026	160045	05/10/2005	IA	P.O. Box 3026
Virginia Mason Medical Center 1100 Ninth Avenue Seattle, WA 98111	500005	06/27/2005	WA	P.O. Box 98111
Virginia Regional Medical Center 901 Ninth Street North Virginia, MN 55792	240084	08/08/2005	MN	
St. Luke's Hospital 5901 Monclova Road Maumee, OH 43537-1899	360090	07/07/2005	OH	
WakeMed Health and Hospitals 3000 New Bern Avenue Raleigh, NC 27610	340069	09/28/2005	NC	
Washington Adventist Hospital 7600 Carroll Avenue Takoma Park, MD 20850	210016	06/14/2005	MD	
Washoe Medical Center 75 Pringle Way Reno, NV	290001	04/27/2005	NV	
St. Lukes Hospital 801 Ostrum Street Bethlehem, PA 18015	390049	09/28/2005	PA	
The Washington Hospital 155 Wilson Avenue Washington, PA 15301	390042	09/12/2005	PA	
Waukesha Memorial Hospital 725 American Avenue Waukesha, WI 53188	520008	11/14/2005	WI	
Washington Hospital Center 110 Irving Street, NW Washington, DC 20010	090011	05/16/2005	DC	
Wellmont Holston Valley Medical Center 130 W. Ravine Road Kingsport, TN 37660	440017	05/16/2005	TN	Holston Valley Vascular Institute
WellStar Kennestone Hospital 805 Sandy Plains Road Marietta, GA 30060	110035	06/27/2005	GA	
WellStar Cobb Hospital 805 Sandy Plains Road Marietta, GA 30060	110143	06/27/2005	GA	
St. Luke's Medical Center 2900 W.Oklahoma Avenue Milwaukee, WI 53201-2901	520138	04/18/2005	WI	P.O. Box 2901
Wesley Medical Center 550 N. Hillside Wichita, KS 67214	170123	09/22/2005	KS	
Wentworth-Douglass Hospital 789 Central Avenue Dover, NH 03820	300018	05/10/2005	NH	
West Virginia University Hospitals, Inc. Medical Center Drive Morgantown, WV 26506	510001	06/29/2005	WV	P.O. Box 8059
West Allis Memorial Hospital 8901 West Lincoln Avenue West Allis, WI 53227	520139	05/26/2005	WI	
Westchester Medical Center 95 Grasslands Road Valhalla, NY 10595	330234	05/16/2005	NY	
Western Baptist Hospital 2501 Kentucky Avenue Paduach, KY 42003-3200	180104	05/05/2005	KY	
Western Medical Center-Santa Ana 1001 North Tustin Avenue Santa Ana, CA 92705	050746	05/25/2005	CA	
St. Luke's Medical Center, LP 1800 East Van Buren Street Phoenix, AZ 85006	030037	08/16/2005	AZ	
William Beaumont Hospital 3601 W. 13 Mile Road Royal Oak, MI 48073	230130	05/10/2005	MI	
The Western Pennsylvania Hospital 4800 Friendship Avenue Pittsburgh, PA 15224	390090	08/23/2005	PA	
Willis Knighton Medical Center 2600 Greenwood Road Shreveport, LA 71103	190111	04/27/2005	LA	
Willis Knighton Bossier 2400 Hospital Drive Bossier City, LA 71111	190236	04/27/2005	LA	
Wilson Memorial Regional Medical Center 33-57 Harrison Street Johnson City, NY 13790	330394	08/22/2005	NY	

Facility	Provider Number	Effective Date	State	Additional Information
Winchester Medical Center P.O. Box 3340 Winchester, VA 22604-2540	490005	05/16/2005	VA	
St. Luke's-Roosevelt Hospital Center 1000 Tenth Avenue New York, NY 10019	330046	05/23/2005	NY	
St. Mary Medical Center 1500 South Lake Park Avenue	150034	10/11/2005	IN	
The Wisconsin Heart Hospital, LLC 10000 West Blue Mound Road Wauwatosa, WI 53226	520199	05/05/2005	WI	
Wishard Health Services 1001 West Tenth Street Indianapolis, IN 46202	150024	07/22/2005	IN	
Wuestoff Health System Melbourne 250 North Wickham Road Melbourne, FL 32935	100092	11/10/2005	FL	
Wuesthoff Health System Rockledge 110 Longwood Avenue Rockledge, FL 32956-5002	010092	10/11/2005	FL	P.O. Box 565002
Wyoming Valley Health care System 575 North River Street Wilkes Barre, PA 18764	390137	04/26/2005	PA	
St. Mary Medical Center 1201 Langhorne-Newtown Road Langhorne, PA 19047	390258	06/01/2005	PA	
St. Mary's Health System 900 E. Oak Hill Avenue Knoxville, TN 37917	440120	10/11/2005	TN	
St. Mary's Hospital 1601 West St. Mary's Road Tucson, AZ 85745	030010	06/27/2005	AZ	
St. Mary's Hospital and Medical Center 2635 North Seventh Street Grand Junction , CO 81501	060023	04/20/2005	CO	P.O. Box 1628
Yakima Regional Medical and Cardiac Center 110 South 9th Avenue Yakima, WA 98902	500012	07/27/2005	WA	
Yale-New Haven Hospital 20 York Street New Haven, CT 06504	070022	09/28/2005	CT	
York Hospital/Wellspan Health 1001 South George Street York, PA 17405-7198	390046	06/08/2005	PA	P.O. Box 15198
York Hospital 15 Hospital Drive York, ME 03909	200020	04/14/2005	ME	
Mercy Hospital 2601 Electric Avenue Port Huron, MI 48060-6518	230031	11/28/2005	MI	
Northwest Community Hospital 800 West Central Road Arlington Heights, IL 60005-2392	140252	11/28/2005	IL	
St. Joseph's Healthcare 15855 Nineteen Mile Road Clinton Township, MI 48038	230047	11/28/2005	MI	
Arlington Memorial Hospital 800 West Randol Mill Road Arlington, TX 76012	450064	11/04/2005	TX	
Anne Arundel Medical Center 2001 Medical Parkway Annapolis, MD 21401	210023	11/14/2005	MD	
CHRISTUS Schumpert Health System One St. Mary Place Shreveport, LA 71121	190041	11/14/2005	LA	
Eisenhower Medical Center 39000 Bob Hope Drive Rancho Mirage, CA 92270	050573	11/14/2005	CA	
Alegent Health Immanuel Medical Center 6901 North 72nd Street Omaha, NE 68122-1799	099398	11/29/2005	NE	
MedCentral Health System 335 Glessner Avenue Mansfield, OH 44903-2265	360118	11/29/2005	OH	
Desert Valley Hospital 16850 Bear Valley Road Victorville, CA 92395	050709	11/29/2005	CA	
Memorial Hospital of Carbondale 405 West Jackson Street Carbondale, IL 62902-9000	140164	11/29/2005	IL	P.O. Box 10000
Providence Medical Center 8929 Parallel Parkway Kansas City, KS 66112	170146	11/29/2005	KS	
St. Mary Medical Center 18300 Highway 18 Apple Valley, CA 92307	05300	11/29/2005	CA	
Sutter Medical Center Santa Rosa 3325 Chanate Road Santa Rosa, CA 95404	050291	11/29/2005	CA	
Tucson Heart Hospital 4888 North Stone Avenue Tucson, AZ 85704	030100	11/29/2005	AZ	
United Hospital Center 327 Medical Park Drive Bridgeport, WV 26330	510006	11/29/2005	WV	
All Saints Healthcare System 3801 Spring Street Racine, WI 53405	520096	12/01/2005	WI	
Beaufort Memorial Hospital 955 Ribaut Road Beaufort, SC 29902-5454	420067	12/01/2005	SC	
Self Regional Healthcare 1325 Spring Street Greenwood, SC 29646	420071	12/01/2005	SC	
Citrus Memorial Health Foundation, Inc. 502 W. Highland Boulevard Inverness, FL 34452-4754	100023	12/05/2005	FL	
Poudre Valley Hospital 1024 South Lemay Avenue Fort Collins, CO 80524	060010	12/05/2005	CO	
St. Joseph's Hospital Health Center 301 Prospect Avenue Syracuse, NY 13203-1898	330140	12/05/2005	NY	
O'Connor Hospital 2105 Forest Avenue San Jose, CA 95128	050153	12/06/2005	CA	
UNC Hospitals 101 Manning Drive Chapel Hills, NC 27514	340061	12/05/2005	NC	
University of Minnesota Medical Center Fairview 2450 Riverside Avenue Minneapolis, MN 55424	240080	12/06/2005	MN	

Facility	Provider Number	Effective Date	State	Additional Information
Wyoming Medical Center 1233 E. 2nd Street Casper, WY 82601	530012	12/06/2005	WY	
Broward General Medical Center 1600 South Andrews Avenue Ft. Lauderdale, FL 33316	100039	12/19/2005	FL	
Baton Rouge General Medical Center 3600 Florida Boulevard Baton Rouge, LA 70806	190065	12/19/2005	LA	
Good Samaritan Medical Center 1309 Flagler Drive West Palm Beach, FL 33401	100287	12/19/2005	FL	
Memorial Hermann Baptist Hospital-Beaumont 3080 College Street Beaumont, TX 77701	450346	12/19/2005	TX	
Largo Medical Center 201 14th Street SW Largo, FL 33770	100248	12/19/2005	FL	Mail P.O. Box 2905
The Nebraska Medical Center 987400 Nebraska Medical Center Omaha, NE 68198-7400	280013	12/19/2005	NE	
Providence Everett Medical Center 1321 Colby Avenue Everett, WA 98201	500014	12/19/2005	WA	
Santa Clara Valley Medical Center 751 South Bascom Avenue San Jose, CA 95128	050038	12/19/2005	CA	
Roper Hospital 316 Calhoun Street Charleston, SC 29401	420087	12/19/2005	SC	
The University of Chicago Hospitals 5841 South Maryland Avenue Chicago, IL 60637-1470	140088	12/19/2005	IL	AMB W-606 MC 6091
Stanford Hospital & Clinics 300 Pasteur Drive Stanford, CA 94305	050441	12/19/2005	CA	
University of Utah Hospitals and Clinics 50 North Medical Drive Salt Lake City, UT 84132	460009	12/19/2005	UT	
Community Medical Center Healthcare System 1800 Mulberry Street Scranton, PA 18510	390001	12/21/2005	PA	
Mercy General Health Partners in Muskegon, Michigan 1500 East Sherman Boulevard Muskegon, MI 49444	230004	12/21/2005	MI	
St. Luke's Medical Center 190 East Bannock Street Boise, ID 83712	130006	12/21/2005	ID	
Riverside Healthcare Systems, LP 4445 Magnolia Avenue Riverside, CA 92501	050022	12/28/2005	CA	Dba Riverside Community Hospital
San Joaquin Community Hospital 2615 Eye Street Bakersfield, CA 93303-2615	050455	12/28/2005	CA	P.O. Box 2615
Santa Rosa Memorial Hospital 1165 Montgomery Drive Santa Rosa, CA 95405-4801	050174	12/28/2005	CA	
United Hospital 333 North Smith Avenue St. Paul, MN 55102	240038	12/28/2005	MN	
Georgetown University Hospital 3800 Reservoir Road, NW Washington, DC 20007-2113	090004	12/30/2005	DC	
Memorial Health Care System 2525 de Sales Avenue Chattanooga, TN 37404-1102	440091	12/30/2005	TN	
Mercy Medical Center 1343 Fountain Boulevard Springfield, OH 45501-1380	360086	12/30/2005	OH	P.O. Box 1380
Munson Medical Center 1105 Sixth Street Traverse City, MI 49684-2386	230097	12/30/2005	MI	
Salem Hospital 665 Winter Street SE Salem, OR 97309-5014	380051	12/30/2005	OR	Post Office Box 14001
Univeristy of Mississippi Medical Center 2500 North State Street Jackson, MS 39216	250001	12/30/2005	MS	
Grant Medical Center 111 S. Grant Avenue Columbus, OH 43215	360017	01/04/2006	OH	
Genesis HealthCare System 2951 Maple Avenue Zanesville, OH 43701	360039	01/06/2006	OH	
St. Joseph Regional Health Center 2801 Franciscan Drive Bryan, TX 77802	450011	01/06/2006	TX	
Washington Hospital Healthcare System 2000 Mowry Avenue Fremont, CA 94538-1716	050195	01/06/2006	CA	
Chesapeake General Hospital 736 Battlefield Boulevard, North Chesapeake, VA 23320	490120	12/12/2005	VA	
Exempla Lutheran Medical Center 8300 West 38th Avenue Wheat Ridge, CO 80033	060009	12/12/2005	CO	
Gaston Memorial Hospital 2525 Court Drive Gastonia, NC 28054	340032	12/12/2005	NC	
Parkridge Medical Center 2333 McCallie Avenue Chattanooga, TN 37404	440156	12/12/2005	TN	
Sparrow Hospital 1215 E. Michigan Lansing, MI 48909-7980	230230	01/12/2006	MI	P.O. Box 30480
St. Mary's of Michigan Hospital 800 S. Washington Avenue Saginaw, MI 48601-2524	230077	01/12/2006	MI	
Michael Reese Hospital 2929 South Ellis Avenue Chicago, IL 06016	140075	01/18/2006	IL	
St. Vincent Infirmary Medical Center Two St. Vincent Circle Little Rock, AR 72205-5499	040007	01/18/2006	AR	
St. Vincent Mercy Medical Center 2213 Cherry Street Toledo, OH 43608-2691	360112	01/18/2006	OH	
Touro Infirmary 1401 Foucher Street New Orleans, LA 70115-3593	190046	01/18/2006	LA	
DeTar Healthcare System P.O. Box 2089 Victoria, TX 77902	450147	01/20/2006	TX	

Facility	Provider Number	Effective Date	State	Additional Information
Carroll Hospital Center 200 Memorial Avenue Westminster, MD 21157	210033	01/20/2006	MD	
Long Beach Memorial Medical Center 2801 Atlantic Avenue Long Beach, CA 90806-1737	050485	01/20/2006	CA	
California Pacific Medical Center-Pacific Campus 2333 Buchanan Street San Francisco, CA 94102	050047	01/23/2006	CA	P.O. Box 7999
MacNeal Hospital 3249 South Oak Park Avenue Berwyn, IL 60402	140054	01/23/2006	IL	
Silver Cross Hospital 1200 Maple Road Joliet, IL 60432	140213	01/23/2006	IL	
SSM St. Clare Health Center 1015 Bowles Avenue Fenton, Mo. 63026	260081	01/23/2006	MO	
North Hills Hospital 4401 Booth Calloway Road North Richland Hills, TX 76180	450087	01/24/2006	TX	
Advocate Good Samaritan Hospital 3815 Highland Avenue Downers Grove, IL 60515-1590	140288	01/26/2006	IL	
Saint Joseph Regional Medical Center 801 East LaSalle Avenue South Bend, IN 46617	150012	01/26/2006	IN	
St. Francis Health Center-Topeka Kansas 1700 SW 7th Street Topeka, KS 66606-1690	170016	01/26/2006	KS	
Glenwood Regional Medical Center P.O. Box 35805 West Monroe, LA 71294-5805	190160	02/01/2006	LA	
Southern Ocean County Hospital 1140 Route 72 West Manahawkin, NJ 08050	310113	02/01/2006	NJ	
Centro Cardiovascular de Puerto Rico y del Caribe P.O. Box 366528 San Juan, Puerto Rico 00936-6528	400124	02/01/2006	PR	
CHRISTUS Hospital 2830 Calder Avenue Beaumont, TX 77726-5405	450034	02/02/2006	TX	PO Box 5405 St. Elizabeth
Trinity Hospitals One Burdick Expressway West Minot, ND 58702-5020	350006	02/02/2006	ND	P.O. Box 5020
Potomac Hospital 2300 Opitz Boulevard Woodbridge, VA 22191	490113	02/02/2006	VA	
Beloit Memorial Hospital 1969 West Hart Road Beloit, WI 53511	520100	02/03/2006	WI	
North Shore Medical Center – FMC Campus 5000 West Oakland Park Boulevard Ft. Lauderdale, FL 33313	10002900	02/06/2006	FL	
Renaissance Hospital 5500 39th Street Groves, TX 77619	450123	02/06/2006	TX	
Centinela Freeman Regional Medical Center, Centinela Campus Inglewood, CA 90301	050739	02/06/2006	CA	
Blount Memorial Hospital 907 E. Lamar Alexander Pkwy Maryville, TN 37804-5016	440011	02/06/2006	TN	
Florida Medical Center 5000 West Oakland Park Boulevard Ft. Lauderdale, FL 33313	100212	N/A	FL	
UMass Memorial Medical Center 55 Lake Avenue North Worcester, MA 01655	220163	02/08/2006	MA	University Campus
Lake Forest Hospital 660 North Westmoreland Road Lake Forest, IL 60045-9989	140130	02/08/2006	IL	
Baylor Regional Medical Center at Plano 4700 Alliance Boulevard Plano, TX 75093-5323	450890	02/08/2006	TX	
Anaheim Memorial Medical Center 1111 West La Palma Avenue Anaheim, CA 92801-2881	050226	02/08/2006	CA	
St. Vincent's Hospital P.O. Box 12407 Birmingham, AL 35202-2407	010056	02/10/2006	AL	
OSF Saint Anthony Medical Center 5666 East State Street Rockford, IL 61108	140233	02/10/2006	IL	
Carondelet St. Joseph's Hospital 350 North Wilmot Road Tucson, AZ 85711-2678	030011	02/17/2006	AZ	
Cedars-Sinai Medical Center 8700 Beverly Boulevard Los Angeles, CA 90048	050625	02/17/2006	CA	
North Colorado Medical Center 1801 16th Street Greeley, CO 80631	060001	02/17/2006	CO	
Hemet Valley Medical Center 1117 East Devonshire Avenue Hemet, CA 92543	050390	02/17/2006	CA	
Southwest Florida Regional Medical Center 2727 Winkler Avenue Fort Myers, FL 33901	100220	02/17/2006	FL	
Saddleback Memorial Medical Center 24451 Health Center Drive Laguna Hills, CA 92653	050603	02/17/2006	CA	
Hillcrest Baptist Medical Center 3000 Herring Avenue Waco, TX 76708-0100	450101	02/22/2006	TX	P.O. Box 5100
Bridgeport Hospital 267 Grant Street Bridgeport, CT 06610	070010	02/22/2006	CT	
MCSA, LLC 700 West Grove Street El Dorado , AR 71730	040088	02/22/2006	AR	Dba Medical Center of South Arkansas
Union Hospital 659 Boulevard Dover, OH 44622	360010	02/22/2006	OH	
West Jefferson Medicla Center 1101 Medical Center Boulevard Marrero, LA 70072	190039	02/22/2006	LA	
Flowers Hospital 4370 West Main Street Dothan, AL 36305	010055	02/24/2006	AL	P.O. Box 6907
CHRISTUS St. John Hospital 18300 St. John Drive Nassau Bay, TX 77058	450709	02/24/2006	TX	

Facility	Provider Number	Effective Date	State	Additional Information
University Hospital and Medical Center 7201 North University Drive Tamarac, FL 33321	100224	02/24/2006	FL	
Aventura Hospital and Medical Center 20900 Biscayne Boulevard Aventura, FL 33180	100131	02/24/2006	FL	
St. Luke's Community Medical Center 71200 St. Luke's Way, Suite 230 The Woodlands, TX 77384	450862	02/24/2006	TX	
North Okaloosa Medical Center 151 Redstone Avenue, East Crestview, FL 32539	100122	02/24/2006	FL	
INTEGRIS Southwest Medical Center 4401 South Western Avenue Oklahoma City, OK 73109	370106	03/06/2006	OK	
Fort Hamilton Hospital 630 Eaton Avenue Hamilton, OH 45013	360132	03/06/2006	OH	
UPMC Passavant 9100 Babcock Boulevard Pittsburgh, PA 15237-5842	107920	03/06/2006	PA	
Temple University Hospital 3401 North Broad Street Philadelphia, PA 19140	390027	03/06/2006	PA	
Memorial Hermann Southeast Hospital 11800 Astoria Boulevard Houston, TX 77089	450184	03/06/2006	TX	
Northwest Medical Center-Washington County 609 W. Maple Avenue Springdale, AR 72764	040022	03/09/2006	AR	
Enloe Medical Center 1531 Esplanade Chico, CA 95926	050039	03/09/2006	CA	
St. Rose Dominican Hospitals, Siena Campus 3001 St. Rose Parkway Henderson, NV 89052	290045	03/13/2006	NV	
Northwest Medical Center - Bentonville 3000 Medical Center Parkway Bentonville, AR 72712	040138	03/13/2006	AR	
Methodist Heart Hospital 7700 Floyd Curl Drive San Antonio, TX 78229	450388	03/20/2006	TX	
Methodist Specialty and Transplant Hospital 8026 Floyd Curl Drive San Antonio, TX 78229	450388	03/20/2006	TX	
Muhlenberg Regional Medical Center Park Avenue & Randolph Road Plainfield, NJ 07061	310063	03/20/2006	NJ	
Lakewood Regional Medical Center 3700 East South Street Lakewood, CA 90712	050581	03/20/2006	CA	P.O. Box 6070
JFK Medical Center 65 James Street Edison, NJ 08818	310108	03/20/2006	NJ	
Bayshore Community Hospital 727 North Beers Street Holmdel, NJ 07733	310112	03/20/2006	NJ	
Memorial Hospital of Burlington 252 McHenry Street Burlington, WI 53105-0400	520059	03/20/2006	WI	P.O. Box 400
Lake Hospital System, Inc. 7590 Auburn Road Concord Township, OH 44077-9176	360098	03/23/2006	OH	
Warren Hospital 185 Roseberry Street Phillips, NJ 08865	310060	03/23/2006	NJ	
Danbury Hospital 24 Hospital Avenue Danbury, CT 06810	070033	03/23/2006	CT	
Sinai Hospital of Baltimore 2401 West Belvedere Avenue Baltimore, MD 21215-5271	210012	03/23/2006	MD	
Sutter General Hospital 5151 F Street Sacramento, CA 95819	050108	03/23/2006	CA	Dba Sutter Memorial Hospital
Valley Hospital Medical Center 620 Shadow Lane Las Vegas, NV 89106	290021	03/23/2006	NV	
Medical City Dallas Hospital 7777 Forest Lane Dallas, TX 75230	450647	03/28/2006	TX	
Southeast Missouri Hospital 1701 Lacey Street Cape Cirardeau, MO 63701	260110	03/28/2006	MO	
Aurora Medical Center - Kenosha 10400 75th Street Kenosha, WI 53142-7884	520189	03/28/2006	WI	
Caritas Good Samaritan Medical Center 235 N. Pearl Street Brockton, MA 02301	220111	03/28/2006	MA	
St. Joseph Hospital 360 Broadway Bangor, ME 04402-0403	200001	03/28/2006	ME	P.O. Box 403
The William W. Backus Hospital 326 Washington Street Norwich, CT 06360	070024	04/03/2006	CT	
Cullman Regional Medical Center 1912 Alabama Highway 157 Cullman, AL 35056-1108	010035	04/03/2006	AL	P.O. Box 1108
Glendale Memorial Hospital and Health Center 1420 South Central Avenue Glendale, CA 91204	050058	04/03/2006	CA	
Owensboro Medical Health System 811 E. Parrish Avenue Owensborrow, KY 42303	180038	04/03/2006	KY	P.O. Box 20007
The University of Virginia Health System P.O. Box 800788 Charlottesville, VA 22908-0788	490009	04/03/2006	VA	
Medcenter One 300 North 7th Street Bismarck, ND 58506	350015	04/05/2006	ND	
Prince George's Hospital Center 3001 Hospital Drive Cheverly, MD 20785	210003	04/05/2006	MD	
Flagler Hospital, Inc 400 Health Park Boulevard St. Augustine, Fl 32086	100090	04/07/2006	FL	
Tri-City Medical Center 4002 Vista Way Oceanside, CA 92056	050128	04/07/2006	CA	
Ingalls Memorial Hospital One Ingalls Drive Harvey, IL 60426	140191	04/07/2006	IL	

Facility	Provider Number	Effective Date	State	Additional Information
The Roy L. Schneider Hospital 9048 Sugar Estate St. Thoman, USVI 00802	480001	04/13/2006	VI	
North Oaks Medical Center 15790 Paul Vega MD Drive Hammond, LA 70403	190015	04/13/2006	LA	
Memorial Regional Hospital 3501 Johnson Street Hollywood, FL 33021	100038	04/13/2006	FL	
Doctors Hospital of Laredo 10700 McPherson Road Laredo, TX 78045	450643	04/13/2006	TX	
Coral Springs Medical Center 3000 Coral Hills Drive Coral Springs, FL 33065	100276	04/18/2006	FL	
Crozer-Chester Medical Center One Medical Center Boulevard Upland, PA 19013-3995	390180	04/18/2006	PA	
Mercy Hospital 746 Jefferson Avenue Scranton, PA 18501	390237	04/18/2006	PA	
Northwest Hospital Center 5401 Old Court Road Randallstown, MD 21133-5185	210040	04/18/2006	MD	
Orange Coast Memorial Medical Center 9920 Talbert Avenue Fountain Valley, CA 92708	050678	04/18/2006	CA	
Western Arizona Regional Medical Center 2735 Silver Creek Road Bullhead City, AZ 86442	030101	04/24/2006	AZ	
Saint Vincent Catholic Medical Centers of New York 170 West 12th Street New York, NY 10011	330290	04/24/2006	NY	St. Vincent Hospital, Manhattan
Good Samaritan Regional Medical Center 3600 NW Samaritan Drive Corvallis, OR 97339	380014	04/24/2006	OR	P.O. Box 1068
Crouse Hospital 736 Irving Avenue Syracuse, NY 13210	330203	04/24/2006	NY	
Tufts-New England Medical Center 750 Washington Street Boston, MA 02111	220116	04/24/2006	MA	
Brandywine Hospital 201 Reeceville Road Coatesville, PA 19320-0953	390076	04/28/2006	PA	
Frisbie Memorial Hospital 11 Whitehall Road Rochester, NH 03867-3297	300014	04/28/2006	NH	
Dallas County Hospital District 5201 Harry Hines Boulevard Dallas, TX 75235	450015	04/28/2006	TX	Dba Parkland Health & Hospital System
Shelby Baptist Medical Center 1000 1st Street North Alabaster, AL 35007	030016	04/28/2006	AL	
Suburban Hospital, Inc. 8600 Old Georgetown Road Bethesda, MD 20814	210022	04/28/2006	MD	
Porter 814 LaPorte Avenue Valparaiso, IN 46383	150035	05/02/2006	IN	
Rowan Regional Medical Center 612 Mocksville Avenue Salisbury, NC 28144	340015	05/02/2006	NC	
University of Kansas Medical Center 3901 Rainbow Boulevard Kansas City, KS 66160-7200	170040	05/02/2006	KS	
Middle Tennessee Medical Center 400 North Highland Avenue Mufreesboro, TN 37133-1178	440053	05/09/2006	TN	P.O. Box 1178
Southcoast Hospitals Group 101 Page Street New Bedford, MA 02740	22007401	05/09/2006	MA	d/b/a St. Luke's Hospital
Yuma Regional Medical Center 2400 South Avenue A Yuma, AZ 85364-7170	030013	05/09/2006	AZ	
North Broward Medical Center 201 East Sample Road Deerfield Beach, FL 33064	100086	05/11/2006	FL	
Sacred Heart Hospital 421 Chew Street Allentown, PA 18102	390197	05/11/2006	PA	
Denton Regional Medical Center 3535 South I-35 East Denton, TX 76210	450634	05/12/2006	TX	
AnMed Health Medical Center 800 North Fant Street Anderson, SC 29621	420027	05/15/2006	SC	
Boone Hospital Center 1600 East Broadway Columbia, MO 65201	260068	05/15/2006	MO	
Riverside Regional Medical Center 500 J Clyde Morris Boulevard Newport News, VA 23601-1976	490052	05/15/2006	VA	
St. Joseph Hospital 2700 Dolbeer Street Eureka, CA 95501	050006	05/17/2006	CA	
Stamford Hospital 30 Shelburne Avenue Stamford, CT 06904	070006	05/17/2006	CT	N/A
Vicksburg Medical Center 2100 Highway 61 North Vicksburgh, MS 39183	250031	05/17/2006	MS	N/A
Legacy Emanuel Hospital and Health Center 2801 N. Gantenbein Avenue Portland, OR 97227	380007	05/24/2006	OR	N/A
Genesis Medical Center 1227 East Rusholme Street Davenport, IA 52803	160033	05/24/2006	IA	N/A
University Hospital of Brooklyn Downstate Medical Center 445 Lenox Road, Box 75 Brooklyn, NY 11203-2098	330350	05/24/2006	NY	N/A
Longview Regional Medical Center 2901 N. Fourth Street Longview, TX 75607-4000	450702	05/24/2006	TX	P.O. Box 14000
Winter Haven Hospital 200 Avenue F, Northeast Winter Haven, FL 33881	100052	05/24/2006	FL	N/A
Baptist Health Medical Center 3333 Springhill Drive North Little Rock, AR 72117	040036	06/01/2006	AR	N/A
Park Nicollet Health Services-Methodist Hospital 6500 Excelsior Boulevard St. Louis Park, MN 55426	240053	06/01/2006	MN	N/A

Facility	Provider Number	Effective Date	State	Additional Information
Shore Memorial Hospital 1 East New York Avenue Somers Point, NJ 08244-2387	310047	06/01/2006	NJ	N/A
Straub Clinic and Hospital 888 South King Street Honolulu, HI 96813	120022	06/02/2006	HI	N/A
Washington Regional Medical Center 3215 N. North Hills Boulevard Fayetteville, AR 72703	040004	06/02/2006	AR	N/A
Genesys Regional Medical Center One Genesys Parkway Grand Blanc, MI 48439	230197	06/08/2006	MI	N/A
McKay-Dee Hospital Center 4401 Harrison Boulevard Ogden, UT 84403	460004	06/08/2006	UT	N/A
Littleton Adventist Hospital 7700 South Broadway Littleton, CO 80122-2628	060113	06/12/2006	CO	N/A
The Heart Center of Indiana 10580 North Meridian Street Indianapolis, IN 46290	150153	06/12/2006	IN	N/A
Jersey Shore Unviveristy Medical Center 1945 Route 33 Neptune, NJ 07754	310073	06/12/2006	NJ	N/A
Hospital Episcopal San Lucas P.O. Box 332027 Ponce, Puerto Rico 00733-2027	400002	06/19/2006	PR	Calle Guadaloupe Final
J D Archbold Memorial Hospital Gordon Avenue at Mimosa Drive Thomasville, GA 31799-1018	110038	06/22/2006	GA	P.O. Box 1018
Covenant Healthcare 1447 N. Harrison Street Saginaw, MI 48602	230070	06/22/2006	MI	N/A
John C. Lincoln North Mountain Hospital 250 East Dunlap Phoenix, AZ 85020	030014	06/22/2006	AZ	N/A
Palmetto Health Baptist Taylor at Marion Streets Columbia, SC 29220	420086	06/22/2006	SC	N/A
Swedish Covenant Hospital 5145 North California Avenue Chicago, IL 60625	140114	06/22/2006	IL	N/A
UPMC McKeesport 1500 Fifth Avenue McKeesport, PA 15132-2482	390002	06/22/2006	PA	N/A
Adventist Hinsdale Hospital 120 N. Oak Street Hinsdale, IL 60521	140122	06/26/2006	IL	N/A
Adventist La Grange Memorial Hosptial 5101 S. Willow Springs Road La Grange, IL 60525	140065	06/26/2006	IL	N/A
Banner Desert Medical Center 1400 S. Dobson Road Mesa, AZ 85202	030065	06/30/2006	AZ	N/A
New York Hospital Medical Center of Queens 56-45 Main Street Flushing, NY 11355-5095	330055	06/30/2006	NY	N/A
Upper Chesapeake Medical Center 500 Upper Chesapeake Drive Bel Air, MD 21014	210049	06/30/2006	MD	N/A
Olathe Medical Center, Inc. 20333 West 151st Street Olathe, KS 66061	170049	06/30/2006	KS	N/A
Sacred Heart Hospital 900 West Clairemont Avenue Eau Claire, WI 54701	520013	06/30/2006	WI	N/A
Mercy Medical Center Redding 2175 Rosaline Avenue Redding, CA 96049-6009	050280	07/06/2006	CA	P.O. Box 496009
Sentara Virgina Beach General Hospital 1060 First Colonial Road Virginia Beach, VA 23454	490057	07/06/2006	VA	N/A
Saint Anthony Memorial 301 W. Homer Street Michigan City, IN 46360	150015	07/06/2006	IN	N/A
Saint Peter's University Hospital 254 Easton Avenue New Brunswick, NJ 08903-0591	310070	07/13/2006	NJ	PO Box 591
Sentara CarePlex Hospital 3000 Coliseum Drive Hampton, VA 23666	490093	07/26/2006	VA	N/A
St. Elizabeth's Hospital 211 South Third Street Belleville, IL 62220	140187	07/26/2006	IL	N/A
Franciscan Health System d/b/a St. Joseph Medical Center 1717 South J Street Tacoma, WA 98401-2197	500108	07/31/2006	WA	P.O. Box 2197
Long Island Jewish Medical Center 270-05 76th Avenue New Hyde Park, NY 11040	330195	07/31/2006	NY	N/A
Saint Vincent Health Center 232 West 25 Street Erie, PA 16544	390009	07/31/2006	PA	N/A
Community Medical Center 2827 Fort Missoula Road Missoula, MT 59804	270023	08/03/2006	MT	N/A
Ball Memorial Hospital, Inc. 2401 West University Avenue Muncie, IN 47303	150089	08/03/2006	IN	N/A
South Central Regional Medical Center 1220 Jefferson Street Laurel, MS 39440	250058	08/03/2006	MS	N/A
University Medical Center of Southern Nevada 1800 West Charleston Boulevard Las Vegas, NV 89102	290007	08/03/2006	NV	N/A
Gundersen Lutheran Medical Center 1900 South Avenue La Crosse, WI 54601	520087	08/07/2006	WI	N/A
Mercy Hospital Anderson 7500 State Road Cincinatti, OH 45255	360001	08/07/2006	OH	N/A
Jackson Memorial Hospital 1611 NW 12 Avenue Miami, FL 33136	100022	08/07/2006	FL	N/A
Inova Fairfax Hospital 3300 Gallows Road Falls Church, VA 22042-3300	490063	08/19/2005	VA	Inova Fairfax Hospital for Children and Inova Heart and Vascular Institute
Lakewood Ranch Medical Center 8330 Lakewood Ranch Boulevard Bradenton, FL 34202	100299	08/10/2006	FL	N/A

Facility	Provider Number	Effective Date	State	Additional Information
Alaska Regional Hospital 2801 DeBarr Road Anchorage, AK 99508	020017	08/11/2006	AK	N/A
Saint Anne's Hospital 795 Middle Street Fall River, MA 02721	220020	08/11/2006	MA	N/A
Little Company of Mary Hospital 4101 Torrance Boulevard Torrance, CA 90503	050353	08/16/2006	CA	N/A
Peninsula Regional Medical Center 100 East Carroll Street Salisbury, MD 21801	210019	08/16/2006	MD	N/A
Valley Baptist Medical Center - Brownsville 1040 West Jefferson Street Brownsville, TX 78520	450028	08/16/2006	TX	PO Box 3590
Memorial Hermann-Memorial City 921 Gessner Road Houston, TX 77024	450610	08/18/2006	TX	N/A
Tacoma General Hospital Multicare Health System 315 Martin Luther King Jr. Way Tacoma, WA 98145-0299	500129	08/18/2006	WA	PO Box 5299
Methodist Le Bonheur Germantown Hospital 7691 Poplar Avenue Germantown, TN 38138	440049	11/14/2005	TN	N/A
Methodist North Hospital 3960 New Covington Pike Memphis, TN 38128	440049	11/14/2005	TN	N/A
Methodist University Hospital 1211 Union Avenue Memphis, TN 38104	440049	11/14/2005	TN	N/A
East Jefferson General Hospital 4200 Houma Boulevard Metairie, LA 70006	191014	08/22/2006	LA	N/A
Harrison Medical Center 2520 Cherry Avenue Bremerton, WA 98310	500039	08/22/2006	WA	N/A
Richardson Regional Medical Center 401 West Campbell Road Richardson, TX 75080-3416	450537	08/22/2006	TX	N/A
Penobscot Bay Medical Center 6 Glen Cover Drive Rockport, ME 04856-4240	200063	08/22/2006	ME	N/A
St. Francis Hospital and Health Centers - Indianapolis 8111 South Emerson Avenue Indianapolis, IN 46237	150162	08/28/2006	IN	N/A
Summit Medical Center 5655 Frist Boulevard Hermitage, TN 37076	440150	09/01/2006	TN	N/A
Heartland Memorial Hospital 701 Superior Avenue Munster, IN 46321	150147	09/06/2006	IN	N/A
Mercy Hospital of Buffalo 565 Abbott Road Buffalo, NY 14220	330279	09/06/2006	NY	N/A
Mercy Memorial Health Center 1011 Fourteenth Ave., NW Ardmore, OK 73401	370047	09/06/2006	OK	N/A
Southwest General Health Center 18697 Bagley Road Middleburgh Heights, OH 44130-3497	360155	09/06/2006	OH	N/A
Summerlin Hospital Medical Center 657 Town Center Drive Las Vegas, NV 89144	290041	09/06/2006	NV	N/A
Nebraska Methodist Hospital 8303 Dodge Street Omaha, NE 68114	280040	09/19/2006	NE	N/A
Hutchinson Hospital Corporation 1701 East 23rd Avenue Hutchinson, KS 67501	170020	09/19/2006	KS	N/A
Fisher-Titus Medical Center 272 Benedict Avenue Norwalk, OH 44857	360065	09/22/2006	OH	N/A
Louisiana State University Health Sciences Center-Shreveport 1501 Kings Highway Shreveport, LA 71130-3932	190098	09/22/2006	LA	P.O. Box 33932
Pocono Medical Center 206 East Brown Street East Stroudsburg, PA	390201	09/25/2006	PA	ESSA Heart and Vascular Institute
Beth Israel Medical Center First Avenue at 16th Street New York, NY 10003	330169	09/28/2006	NY	Milton and Carroll Petrie Division
Holy Redeemer Hospital and Medical Center 1648 Huntingdon Pike Meadowbrook, PA 19046	390097	09/28/2006	PA	N/A
Scottsdale Healthcare Osborn 7400 E. Osborn RoadScottsdale, AZ 85251	030038	09/28/2006	AZ	N/A
Scottsdale Healthcare Shea 9003 E Shea Boulevard Scottsdale, AZ 85260	030087	09/28/2006	AZ	N/A
Aurora BayCare Medical Center 2845 Greenbrier Road Greenbay, WI 54308-8900	520193	10/06/2006	WI	PO Box 8900
St. Agnes Hospital 430 E. Division Street Fond du Lac, WI 54936-0385	520088	10/06/2006	WI	PO Box 385
Baptist Hospital West 10820 Parkside Drive Knoxville, TN 37934	440226	10/06/2006	TN	N/A
Kenmore Mercy Hospital 2950 Elmwood Avenue Kenmore, NY 14217	330102	10/12/2006	NY	N/A
Albert Einstein Medical Center 5401 Old York Road Philadelphia, PA 19141	390142	10/13/2006	PA	N/A
Community Regional Medical Center PO Box 1232 Fresno, CA 93715-1232	050060	10/13/2006	CA	N/A
Excela Health System, Westmoreland Regional Hospital 532 West Pittsburgh Street Greenburg, PA 15601	390145	10/20/2006	PA	N/A
Mainland Medical Center 6801 Emmett F. Lowry Expressway Texas City, TX 77591	450530	10/20/2006	TX	N/A
Southeast Georgia Health System; Brunswick Campus 2415 Parkwood Drive Brunswick, GA 31520	110025	10/27/2006	GA	N/A
NCH Healthcare Systems, Inc. 350 Seventh Street N Naples, FL 34102	190018	10/27/2006	FL	N/A
Alliance Hospital, LTD 515 North Adams Avenue Odessa, TX 79761	450868	10/27/2006	TX	N/A

Facility	Provider Number	Effective Date	State	Additional Information
BroMenn Healthcare P.O. Box 2850 Bloomington, IL 61702-2850	140127	11/06/2006	IL	N/A
Exeter Hospital 5 Alumni Drive Exeter, NH 03833	300023	11/06/2006	NH	N/A
South Miami Hospital 6200 SW 73 Street Miami, FL 33143	100154	11/06/2006	FL	N/A
Merle West Medical Center 2865 Daggett Avenue Klamath Falls, OR 97601	380050	11/13/2006	OR	N/A
Seton Corporation 2000 Church Street Nashville, TN 37236	440133	11/13/2006	TN	d/b/a Baptist Hospital
Caldwell Memorial Hospital, Inc. 321 Mulberry Street SW Lenoir, NC 28645	340041	11/16/2006	NC	N/A
Phoenixville Hospital 140 Nutt Road Phoenixville, PA 19460	390127	11/16/2006	PA	N/A
Methodist Hospitals 600 Grant Street Gary, IN 46402	150002	11/16/2006	IN	N/A
Sandhills Regional Medical Center 1000 West Hamlet Avenue Hamlet, NC 28345	340106	11/16/2006	NC	N/A
Physicians Regional Medical Center 6101 Pine Ridge Road Naples, FL 34119	100286	11/16/2006	FL	N/A
St. Elizabeth Health Center 1044 Belmont Avenue Youngstown, OH 44501-1790	360064	11/16/2006	OH	N/A
St. Anne Mercy Hospital 3404 W. Sylvania Avenue Toledo, OH 43623	360262	11/16/2006	OH	N/A
The University of Texas Medical Branch 301 University Boulevard Galveston, TX 77555-0518	450018	11/16/2006	TX	N/A
Clara Maass Medical Center 1 Clara Maass Drive Belleville, NJ 07109	310090	11/24/2006	NJ	N/A
Columbus Regional Hospital 2400 East 17th Street Columbus, IN 47201	150112	11/24/2006	IN	N/A
Northern Michigan Hospital, Inc 416 Connable Avenue Petoskey, MI 49770	230105	05/01/2006	MI	N/A
St. Joseph Hospital 2605 Harlem Road Cheektowaga, NY 14225-4097	330091	11/24/2006	NY	N/A
Carolinas Hospital System 805 Pamplico Highway Florence, SC 29501-0550	420091	12/01/2006	SC	PO Box 100550
Chambersburg Hospital 112 North Seventh Street Chambersburg, PA 17201-6005	390151	12/01/2006	PA	PO Box 6005
Chandler Regional Hospital 475 South Dobson Road Chandler, AZ 85224	030036	12/01/2006	AZ	N/A
Kingwood Medical Center 22999 US Highway 59 Kingwood, TX 77339	450775	12/01/2006	TX	N/A
McLeod Regional Medical Center 555 East Cheves Street Florence, SC 29501-0551	420051	12/01/2006	SC	PO Box 100551
Bloomington Hospital P.O. Box 1149 Bloomington, IN 47402	150051	12/11/2006	IN	N/A
The Medical Center of Southeast Texas 2555 Jimmy Johnson Boulevard Port Arthur, TX 77640	450518	12/11/2006	TX	N/A
Somerset Medical Center 110 Rehill Avenue Somerville, NJ 08876-2598	310048	12/11/2006	NJ	N/A
Bon Secours Maryview Medical Center 3636 High Street Portsmouth, VA 23707	490017	12/21/2006	VA	N/A
Washington County Hospital 251 East Antietam Street Hagerstown, MD 21740	210001	12/21/2006	MD	N/A
Montgomery General Hospital 18101 Prince Philip Drive Olney, MD 20832	210018	12/21/2006	MD	N/A
Evangelical Community Hospital One Hospital Drive Lewisburg, PA 17837	390013	12/21/2006	PA	N/A
Presbyterian Hospital of Denton 3000 I-35N Denton, TX 76201	450743	01/10/2007	TX	N/A
St. John Macomb Hospital 11800 E 12 Mile Road Warren, MI 48093	230195	01/10/2007	MI	N/A
The University Hospital 150 Bergen Street Newark, NJ 07103	310119	01/10/2007	NJ	N/A
Wesley Medical Center PO Box 16509 Hattiesburg, MS 39404-6509	250094	01/10/2007	MS	N/A
Indiana University Hospital 550 University Boulevard. Indianapolis, IN 46202	150056	05/23/2005	IN	N/A
Methodist Hospital 1701 N Senate Avenue Indianapolis, IN 46202	150056	05/23/2005	IN	N/A
Riley Hospital 702 Barnhill Street Indianapolis, IN 46202	150056	05/23/2005	IN	N/A
Bayhealth Medical Center/Kent General Hospital 640 South State Street Dover, DE 19901	080004	01/25/2007	DE	N/A
East Alabama Medical Center 2000 Pepperell Parkway Opelika, AL 36801	010029	01/25/2007	AL	N/A
Oakwood Annapolis Hospital 33155 Annapolis Avenue Wayne, MI 48184-2493	230142	01/25/2007	MI	N/A
INOVA Mount Vernon Hospital 2501 Parker's Lane Alexandria, VA 22306	490122	01/25/2007	VA	N/A
Southcoast Hospitals Group 363 Highland Avenue Fall River, MA 02720	22007402	01/25/2007	MA	d/b/a Charlton Memorial Hospital

Facility	Provider Number	Effective Date	State	Additional Information
Williamsport Hospital & Medical Center 777 Rural Avenue Williamsport, PA 17701-3198	390045	01/25/2007	PA	N/A
Altru Health System P.O. Box 6003 Grand Forks, ND 58206-6003	350019	01/31/2007	ND	N/A
Bon Secours Memorial Regional Medical Center 8260 Atlee Road Mechanicsville, VA 23116	490069	01/31/2007	VA	N/A
Hanover Hospital 300 Highland Avenue Hanover, PA 17331	390233	01/31/2007	PA	N/A
Gateway Medical Center 1771 Madison Street Clarksville, TN 37043-3160	440035	01/31/2007	TN	P.O. Box 3160
Henry Ford Wyandotte Hospital 2333 Biddle Avenue Wyandotte, MI 48192	230146	01/31/2007	MI	N/A
Terre Haute Regional Hospital 3901 South 7th Street Terre Haute, IN 47802	150046	01/31/2007	IN	N/A
Lee Memorial Health System P.O. Box 2218 Fort Myers, FL 33902	100012	01/31/2007	FL	N/A
Jefferson Regional Medical Center 565 Coal Valley Road Pittsburgh, PA 15236-0119	390265	01/31/2007	PA	P.O. Box 18119
Central Florida Regional Hospital 1401 W. Seminole Boulevard Sanford, FL 32771	100161	02/09/2007	FL	N/A
Lawrence and Memorial Hospital 365 Montauk Avenue New London, CT 06320	070007	02/09/2007	CT	N/A
Saint John's Hospital and Health Center 1328 Twenty-Second Street Santa Monica, CA 90404	050290	02/09/2007	CA	N/A
Pontiac Osteopathic Hospital 50 North Perry Street Pontiac, MI 48342-2253	230207	02/09/2007	MI	d/b/a POH Medical Center
Trinity Medical Center 800 Montclair Road Birmingham, AL 35213	010104	04/26/2005	AL	N/A
Carson-Tahoe Hospital 775 Fleischmann Way Carson City, NV 89702-2168	290019	08/04/2005	NV	P.O. Box 2168
Harton Regional Medical Center 1801 N. Jackson Street Tullahoma, TN 37388	440144	02/28/2007	TN	
University of Washington Medical Center 1959 N.E. Pacific Street, Room BB318, Box 356151 Seattle, WA 98195-6151	500008	02/28/2007	WA	
NCH Healthcare Systems, Inc. 350 Seventh Street N Naples, FL 34102	100018	10/27/2006	FL	N/A
Roger Williams Medical Center 825 Chalkstone Avenue Providence, RI 02908	410004	03/09/2007	RI	N/A
St. Joseph Hospital 2900 N. Lake Shore Drive Chicago, IL 60657	140224	03/09/2007	IL	N/A
The Queen's Medical Center 1301 Punchbowl Street Honolulu, HI 96813	120001	03/09/2007	HI	N/A
Good Shepherd Medical Center 700 East Marshall Avenue Longview, TX 75601	450037	03/15/2007	TX	N/A
Kaiser Foundation Hospital, Fontana Medical Center 9961 Sierra Avenue Fontana, CA 92335	050140	03/15/2007	CA	N/A
St. Charles Mercy Hospital 2600 Navarre Avenue Oregon, OH 43616	360081	03/15/2007	OH	N/A
Reston Hospital Center 1850 Town Center Parkway Reston, VA 20190	490107	03/15/2007	VA	N/A
St. Francis Hospital & Health Centers 1600 Albany Street Beech Grove, IN 46107	150033	04/01/2005	IN	St. Francis Cardiac & Vascular Care Center; CAS procedures moved to 8111 S. Emerson Ave
St. Francis Hospital and Health Centers - Indianapolis 8111 South Emerson Avenue Indianapolis, IN 46237	150162	08/28/2006	IN	St Francis Heart Center
Kaiser Permanente Los Angeles Medical Center 1505 N. Edgemont Street Los Angeles, CA 90027	050138	03/21/2007	CA	N/A
St. Mary's Hospital 1800 East Lake Shore Drive Decatur, IL 62521	140166	03/21/2007	IL	N/A
Methodist Sugar Land Hospital 16655 Southwest Freeway Sugar Land, TX 77479	450358	03/21/2007	TX	N/A
Holy Cross Hospital 1500 Forest Glen Road Silver Spring, MD 20910-1484	210004	03/29/2007	MD	N/A
Holy Name Hospital 718 Teaneck Road Teaneck, NJ 07666	310008	03/29/2007	NJ	N/A
St. Charles Medical Center - Bend 2500 NE Neff Road Bend, OR 97701	380047	03/29/2007	OR	N/A
Rush Oak Park Hospital 520 South Maple Avenue Oak Park, IL 60304-1097	140063	03/29/2007	IL	N/A
Doctors Medical Center 1441 Florida Avenue Modesto, CA 95352	050464	04/12/2007	CA	PO Box 4138
Oak Hill Hospital 11375 Cortez Boulevard Brooksville, FL 34613	100264	04/12/2007	FL	N/A
St. Mary's Health Care System 1230 Baxter Street Athens, GA 30606-3791	110006	04/12/2007	GA	N/A
Tift Regional Medical Center 901 East 18th Street Tifton, GA 31793	110095	04/12/2007	GA	PO Box 747

Facility	Provider Number	Effective Date	State	Additional Information
The Neurological and Orthopedic Institute of Chicago 4501 North Winchester Avenue Chicago, IL 60640	140303	04/12/2007	IL	N/A
UCSD La Jolla - John M. and Sally B. Thornton Hospital 9300 Campus Point Drive La Jolla, CA 92037	050025	10/24/2005	CA	N/A
The Regional Medical Center of Orangeburg and Calhoun Counties 3000 St. Matthews Road Orangeburg, SC 29118-1498	420068	04/26/2007	SC	N/A
Northern Westchester Hospital 400 East Main Street Mt. Kisco, NY 10549	330162	04/26/2007	NY	N/A
Laredo Medical Center 1700 E. Saunders Street Laredo, TX 78041	450029	04/26/2007	TX	N/A
East Jefferson General Hospital 4200 Houma Boulevard Metairie, LA 70006	190146	08/22/2006	LA	N/A
Cookeville Regional Medical Center 142 West Fifth Street Cookeville, TN 38501	440059	05/03/2007	TN	N/A
Palisades Medical Center 7600 River Road North Bergen, NJ 07047	310003	05/03/2007	NJ	N/A
Monongahela Valley Hospital 1163 Country Club Road Monongahela, PA 15063	390147	05/03/2007	PA	N/A
The Heart Hospital Baylor Plano 1100 Allied Drive Plano, TX 75093	670025	05/03/2007	TX	N/A
Westlake Hospital 1223 West Lake Street Melrose Park, IL	140240	05/07/2007	IL	N/A
Beverly Hospital 85 Herrick Street Beverly, MA 01915	220033	05/03/2007	MA	N/A
Bakersfield Heart Hospital 3001 Sillect Avenue Bakersfield, CA 93308	050724	05/22/2007	CA	N/A
Baylor Medical Center at Garland 2300 Marie Curie Garland, TX 75042	450280	05/22/2007	TX	N/A
Bon Secours Baltimore Health System 2000 West Baltimore Street Baltimore, MD 21223	210013	05/22/2007	MD	N/A
St. Mary Mercy Hospital 36475 W. Five Mile Road Livonia, MI 48154	230002	05/22/2007	MI	N/A
Crittenton Hospital Medical Center 1101 West University Drive Rochester, MI 48307	230254	05/22/2007	MI	N/A
St. Vincent Medical Center 2131 W. Third Street Los Angeles, CA 90057-0992	050502	05/22/2007	CA	N/A
The Regional Medical Center at Memphis 877 Jefferson Avenue Memphis, TN 38103	440152	05/22/2007	TN	N/A
University General Hospital 7500 Fannin Street Houston, TX 77054	670019	05/22/2007	TX	N/A
Dakota Specialty Institute 3000 32nd Avenue SW Fargo, ND 58104	350070	06/05/2007	ND	d.b.a Innovis Health
Johns Hopkins Bayview Medical Center 4940 Eastern Avenue Baltimore, MD 21224-2780	210029	06/05/2007	MD	N/A
Franciscan Skemp Healthcare 700 West Avenue South La Crosse, WI 54601-4796	520004	06/08/2007	WI	N/A
Wheeling Hospital 1 Medical Park Wheeling, WV 26003	510050	06/08/2007	WV	N/A
Intermountain Healthcare Dixie Regional Medical Center 1380 East Medical Center Drive St. George, UT 84790-2123	460021	06/27/2007	UT	N/A
Jane Phillips Medical Center 3500 SE Frank Phillips Boulevard Bartlesville, OK 74006	370018	06/27/2007	OK	N/A
St. James Hospital and Health Centers 20201 S. Crawford Avenue Olympia Fields, IL 60461-1010	140172	06/27/2007	IL	N/A
Medical Center of the Rockies 2500 Rocky Mountain Avenue Loveland, CO 80538	060119	06/27/2007	CO	N/A
Westside Regional Medical Center 8201 W. Broward Boulevard Plantation, FL 33324	100228	06/27/2007	FL	N/A
East Ohio Regional Hospital 90 N 4th Street Martins Ferry, OH 43935	360080	07/05/2007	OH	N/A
NEA Baptist Memorial Hospital 3024 Stadium Boulevard Jonesboro, AR 72401	040118	07/05/2007	AR	N/A
Hazleton General Hospital 700 East Broad Street Hazleton, PA 18201	390185	07/05/2007	PA	N/A
St. Lucie Medical Center 1800 SE Tiffany Avenue Port St. Lucie, FL 34952	100260	07/18/2007	FL	N/A
Memorial Medical Center 1700 Coffee Road Modesto, CA 95355	050557	08/01/2007	CA	N/A
Hopedale Medical Complex 107 Tremont Street Hopedale, IL 61747	141330	08/20/2007	IL	PO Box 267
Marquette General Health System 580 W. College Avenue Marquette, MI 49855	230054	08/20/2007	MI	N/A
The Good Samaritan Hospital Fourth and Walnut Streets Lebanon, PA 17042-1281	390066	08/20/2007	PA	PO Box 1281
MidState Medical Center 435 Lewis Avenue Meriden, CT 06451	070017	08/20/2007	CT	N/A
Mercy San Juan Medical Center 6501 Coyle Avenue Carmichael, CA 95680	050516	08/20/2007	CA	N/A
Western Plains Medical Complex 3001 Avenue A Dodge City, KS 67801-1478	170175	08/20/2007	KS	PO Box 1478
Conroe Regional Medical Center 504 Medical Center Boulevard Conroe, TX 77304	450222	08/27/2007	TX	N/A

Facility	Provider Number	Effective Date	State	Additional Information
Frederick Memorial Hospital 400 W 7th Street Frederick, MD 21701	210005	09/04/2007	MD	N/A
Tenet Hospitals Limited 9440 Poppy Drive Dallas, TX 75218	450678	09/07/2007	TX	Doctors Hospital at White Rock Lake
Middlesex Hospital 28 Crescent Street Middletown, CT 06457-3650	070020	09/07/2007	CT	N/A
Lewis Gale Medical Center 1900 Electric Road Salem, VA 24153	490048	09/07/2007	VA	N/A
Abington Memorial Hospital 1200 Old York Road Abington, PA 19001-3788	390231	10/05/2007	PA	N/A
Alamance Regional Medical Center, Inc. Post Office Box 202 Burlington, NC 27216	340070	10/05/2007	NC	N/A
Memorial Hospital of Gardena 1145 West Redondo Beach Boulevard Gardena, CA 90247	050468	10/05/2007	CA	N/A
Floyd Medical Center 304 Turner McCall Boulevard Rome, GA 30165	110054	10/05/2007	GA	N/A
Morristown Hamblen Healthcare System 908 West Fourth North Street Morristown, TN 37816	500336	10/05/2007	TN	PO Box 1178
St. Joseph Hospital 700 Broadway Fort Wayne, IN 46802	150047	10/05/2007	IN	N/A
Butler Memorial Hospital 911 E Brady Street Butler, PA 16001	390168	10/15/2007	PA	N/A
Hackettstown Regional Medical Center 651 Willow Grove Street Hackettstown, NJ 07840	310115	10/15/2007	NJ	N/A
Centennial Medical Center 2300 Patterson Street Nashville, TN 37203	440161	10/29/2007	TN	N/A
Cape Regional Medical Center Two Stone Harbor Boulevard Cape May Court House, NJ 08210	310011	10/29/2007	NJ	N/A
Waterbury Hospital Health Center 64 Robbins Street Waterbury, CT 06721	070005	10/29/2007	CT	N/A
Stringfellow Memorial Hospital 301 East 18th Street Anniston, AL 36202	010038	10/29/2007	AL	PO Box 38
Hernando HMA d/b/a Brooksville Regional Hospital 17240 Cortez Boulevard Brooksville, FL 34601	100071	10/29/2007	FL	N/A
Carolinas Medical Center Mercy 2001 Vail Avenue Charlotte, NC 28207	340098	11/08/2007	NC	N/A
Redmond Regional Medical Center 501 Redmond Road Rome, GA 30164-7001	110168	11/08/2007	GA	P.O. Box 107001
Mary Black Memorial Hospital 1700 Skylyn Drive Spartanburg, SC 29306	420083	11/21/2007	SC	N/A
Coney Island Hospital 2601 Ocean Parkway Brooklyn, NY 11235	330196	12/17/2007	NY	
Norwalk Hospital 34 Maple StreetNorwalk, CT 06850	070034	12/17/2007	CT	
Our Lady of Lourdes Memorial Hospital, Inc. 169 Riverside Drive Binghamton, NY 13905	330011	12/17/2007	NY	
University of Missouri Hospitals and Clinics One Hospital Drive, DC 031.00 Columbia, MO 65212	260141	12/17/2007	MO	
Lake Regional Healthcare Corporation 712 S. Cascade Street Fergus Falls, MN 56537	240052	12/21/2007	MN	
Providence Tarzana Medical Center 18321 Clark Street Tarzana, CA 91356	050761	9/26/08	CA	
Union Hospital of Cecil County 106 Bow Street Elkton, MD 21921	210032	01/04/2008	MD	
Southwest Healthcare System 36485 Inland Valley Drive Wildomar, CA 92595	050701	01/14/2008	CA	
Long Island College Hospital 339 Hicks Street Brooklyn, NY 11201	330152	02/15/2008	NY	
Halifax Regional Health System 2204 Wilborn Avenue South Boston, VA 24592	490013	02/27/2008	VA	
Montgomery Hospital 1301 Powell Street Norristown, PA 19404-0992	390108	02/27/2008	PA	PO Box 992
Christian Hospital Northeast 11133 Dunn Road St. Louis, MO 63136	260180	04/04/2008	MO	
Overland Park Regional Medical Center 10500 Quivira Road Overland Park, KS 66215	170176	04/04/2008	KS	
Franklin Hospital 900 Franklin Avenue Valley Stream, NY 11580	330372	04/11/2008	NY	
Muskogee Regional Medical Center 300 Rockefeller Drive Muskogee, OK 74401	370025	04/11/2008	OK	
University of New Mexico Hospital 1 University of New Mexico Albuquerque, NM 87131	320001	04/11/2008	NM	MSC105610
OakBend Medical Center 1705 Jackson Street Richmond, TX 77469	450330	04/28/2008	TX	
South Florida Baptist Hospital 301 North Alexander Street Plant City, FL 33563	100132	04/28/2008	FL	
Bayfront Medical Center 701 Sixth Street South St. Petersburg, FL 33701	100032	05/05/2008	FL	
Palmyra Medical Centers 2000 Palmyra Road Albany, GA 31702-1908	110163	05/20/2008	GA	P.O. Box 1908

Facility	Provider Number	Effective Date	State	Additional Information
Alvarado Hospital, LLC 6655 Alvarado Road San Diego, CA 92120	050757	05/22/2008	CA	
West Valley Hospital 13677 W. McDowell Road Goodyear, AZ 85395	030110	05/22/2008	AZ	N/A
Edward Hospital 801 S. Washington Street Naperville, IL 60540	140231	06/09/2008	IL	N/A
St. Dominic Hospital 969 Lakeland Drive Jackson, MS 39216-4699	250048	06/09/2008	MS	N/A
Paradise Valley Hospital 2400 East Fourth Street National City, CA 91950	050024	06/09/2008	CA	N/A
Phoebe Putney Memorial Hospital 417 Third Avenue Albany, GA 31702-1828	110007	06/09/2008	GA	PO Box 1828
Flagstaff Medical Center 1200 North Beaver Street Flagstaff, AZ 86001	030023	06/17/2008	AZ	N/A
Williamson Medical Center 4321 Carothers Parkway Franklin, TN 37067	440029	07/03/2008	TN	N/A
Mercy Medical Center 250 Mercy Drive Dubuque, IA 52001	160069	07/16/2008	IA	N/A
Bethesda Memorial Hospital 2815 S. Seacrest Boulevard Boynton Beach, FL 33435	100002	07/21/2008	FL	N/A
Mercy Medical Center - North Iowa 1000 4th Street SW Mason City, IA 50401	160064	07/21/2008	IA	N/A
Saint Vincent Hospital 123 Summer Street Worcester, MA 01608	220176	07/31/2008	MA	
Arizona Regional Medical Center 515 North Mesa Drive Mesa, AZ 85201	1669639639	09/10/2008	AZ	
Winthrop University Hospital 259 First Street Mineola, NY 11501	330167	09/10/2008	NY	
Deaconess Hospital 5501 N. Portland Avenue Oklahoma City, OK 73112	370032	09/10/2008	OK	
Saint Francis Hospital 355 Ridge Avenue Evanston, IL 60202	140080	09/23/2008	IL	
Bellin Health 744 S. Webster Avenue Green Bay, WI 54305-3400	520049	09/23/2008	WI	P.O. Box 23400
Advocate Good Shepherd Hospital 450 W. Highway 22 Barrington, IL 60010	NPI #1447368071	10/14/2008	IL	
Lone Star H.M.A., LP d/b/a Dallas Regional Medical Center 1011 N. Galloway Avenue Mesquite, TX 75149	450688	10/24/2008	TX	
Providence Hospital 6801 Airport Boulevard Mobile, AL 36685	001090	10/24/2008	AL	P.O. Box 850429
Blake Medical Center 2020 59th Street West Bradenton, FL 34209	100213	11/06/2008	FL	
Proctor Community Hospital 5409 North Knoxville Avenue Peoria, IL 61614	140013	11/06/2008	IL	
St. Jude Medical Center 101 E. Valencia Mesa Drive Fullerton, CA 92835	050168	11/06/2008	CA	
The Western Pennsylvania Hospital Forbes Regional Campus 2570 Haymaker Road Monroeville, PA 15146	390267	11/18/2008	PA	
Franciscan Physicians Hospital 701 Superior Avenue Munster, IN 46321	150165	12/03/2008	IN	
Marin General Hospital 250 Bon Air Road Greenbrae, CA 94904-1784	050360	12/03/2008	CA	
Reid Hospital & Health Care Services 1100 Reid Parkway Richmond, IN 47374	150048	12/03/2008	IN	
St. Mary's Medical Center 901 45th Street West Palm Beach, FL 33407	100288	12/03/2008	FL	
Capital Health Regional Medical Center 750 Brunswick Avenue Trenton, NJ 08638	1275583726	01/20/2009	NJ	
Helen Ellis Memorial Hospital 1395 South Pinellas Avenue Tarpon Springs, FL 34689	100055	01/20/2009	FL	
Palms West Hospital 13001 Southern Boulevard Loxahatchee, FL 33470-1150	100269	01/20/2009	FL	
Memorial Herman Northwest 1635 North Loop West Houston, TX 77008	450184	01/20/2009	TX	
Mercy Medical Center 1320 Mercy Drive Canton, OH 44708	360070	01/29/2009	OH	
North Mississippi Medical Center 830 South Gloster Street Tupelo, MS 38801	250004	01/29/2009	MS	
Arrowhead Hospital 18701 North 67th Avenue Glendale, AZ 85308	030094	04/16/2009	AZ	
Imperial Point Medical Center 6401 North Federal Highway Fort Lauderdale, FL 33308	100200	04/08/2009	FL	
Legacy Meridian Park Hospital 19300 SW 65th Avenue Tualatin, OR 97062	380089	04/08/2009	OR	
Sacred Heart Medical Center at RiverBend 3311 RiverBend Drive Springfield, OR 97477	380102	02/19/2009	OR	
San Antonio Community Hospital 999 San Bernardino Road Upland, CA 91786	050099A	03/20/2009	CA	
Tarrant County Hospital District 1500 S. Main Street Fort Worth, TX 76104	1992753222	02/19/2009	TX	Dba JPS Health Network
Virginia Commonwealth University Health System Authority 1250 East Marshall Street P.O. Box 980510 Richmond, VA 23298-0510	490032	03/18/2009	VA	

Facility	Provider Number	Effective Date	State	Additional Information
Yavapai Regional Medical Center 1003 Willow Creek Road Prescott, AZ 86301-1668	030012	04/08/2009	AZ	
East El Paso Physicians Medical Center 1416 George Dieter El Paso, TX 79936	450877	05/14/2009	TX	
New York Westchester Square Medical Center 2475 St. Raymond Avenue Bronx, NY 10461	330316	05/14/2009	NY	
P&S Surgical Hospital 312 Grammont Street, Suite 101 Monroe, LA 71201	190246	05/14/2009	LA	
The MetroHealth System 2500 MetroHealth Drive Cleveland, OH 44109-1998	360059	05/20/2009	OH	
Clarian Arnett Health 5165 McCarty Lane Lafayette, IN 47905	150173	07/02/2009	IN	
Maury Regional Medical Center 1224 Trotwood Avenue Columbia, TN 38401	440073	07/02/2009	TN	
Tulane Medical Center 1415 Tulane Avenue New Orleans, LA 70112	190176	07/02/2009	LA	
Northeast Baptist Hospital 8811 Village Drive San Antonio, TX 78217	450058	10/04/2005	TX	
St. Luke's Baptist Hospital 7930 Floyd Curl Drive San Antonio, TX 78229	450058	10/04/2005	TX	
Southeast Baptist Hospital 4214 East Southcross Boulevard San Antonio, TX 78222	450058	10/04/2005	TX	
North Central Baptist Hospital 520 Madison Oak Drive San Antonio, TX 78258	450058	10/04/2005	TX	
Jeanes Hospital 7600 Central Avenue Philadelphia, PA 19111	390080	07/30/2009	PA	
Bayshore Medical Center 4000 Spence Highway Pasadena, TX 77504	450097	08/13/2009	TX	
CHRISTUS Hospital 3600 Gates Boulevard Port Arthur, TX 77642	450034	02/02/2006	TX	St. Mary
Peace River Regional Medical Center 2500 Harbor Boulevard Port Charlotte, FL 33952	100077	08/24/2009	FL	
Jennings American Legion Hospital 1634 Elton Road Jennings, LA 70546	190053	09/11/2009	LA	
Mayo Clinic Hospital 4500 San Pablo Road Jacksonville, FL 32224	100151	06/29/2005	FL	
Capital Health System – Mercer Campus 446 Bellevue Avenue Trenton, NJ 08618	1073516183	09/28/2009	NJ	
Goshen General Hospital 200 High Park Avenue Goshen, IN 46526	1740268846	09/28/2009	IN	
University of Miami Hospital 1400 N.W. 12th Avenue Miami, FL 33136-5511	100009	10/15/2009	FL	
Grays Harbor Community Hospital 915 Anderson Drive Aberdeen, WA 98520	500031	12/10/2009	WA	
Mercy Medical Center - Sioux City, Iowa 801 5th Street Sioux City, IA 51101	160153	12/10/2009	WA	
Palm Springs General Hospital 1475 West 49th Street Hialeah, FL 33012	100050	01/12/2010	FL	
Parrish Medical Center 951 N. Washington Avenue Titusville, FL 32796	100028	01/12/2010	FL	
New York Presbyterian Hospital 177 Ft. Washington Avenue New York, NY 10032	330101	05/05/2005	NY	
New York Presbyterian Hospital 173 Ft. Washington Avenue New York, NY 10032	330101	05/05/2005	NY	
Northside Hospital & Tampa Bay Heart Institute 6000 49th Street North St. Petersburg, FL 33709	1205880945	02/26/2010	FL	
Orange Park Medical Center 2001 Kingsley Avenue Orange Park, FL 32073	100226	02/26/2010	FL	
Saint Thomas Hospital 4220 Harding Road Nashville, TN 37205	440082	02/26/2010	TN	
Marshall Medical Center North 8000 Alabama Highway 69 Guntersville, AL 35976	15082417	04/02/2010	AL	
Oklahoma Heart Hospital South LLC 5200 E I 240 Service Road Oklahoma City, OK 73135-2610	1841442274	04/02/2010	OK	
Great River Medical Center 1221 S. Gear Avenue West Burlington, IA 52655-1681	420680407	04/16/2010	IA	
Liberty Hospital P.O. Box 1002 Liberty, MO 64069-1002	260177	04/16/2010	MO	
Scripps Memorial Hospital Encinitas 354 Santa Fe Drive ENC01 Encinitas, CA 92024	050503	04/16/2010	CA	
University of Maryland Medical Center 22 South Greene Street Baltimore, MD 21201-1595	210002	04/16/2010	MD	
Central Mississippi Medical Center 1850 Chadwick Drive Jackson, MS 39204	250072	05/06/2010	MS	
Fairfield Medical Center 401 North Ewing Street Lancaster, OH 43130	360072	05/06/2010	OH	
Eastern Idaho Regional Medical Center 3100 Channing Way Idaho Falls, ID 83401	130018	06/04/2010	ID	
Ocala Regional Medical Center 1431 SW First Avenue Ocala, FL 34474	100212	06/04/2010	FL	
Scott & White Healthcare – Round Rock 302 University Boulevard Round Rock, TX 78665	670034	06/04/2010	TX	

Facility	Provider Number	Effective Date	State	Additional Information
Trinity Hospital of Augusta 2260 Wrightsboro Road Augusta, GA 30904	110039	06/04/2010	GA	
Desert Regional Medical Center 1150 N. Indian Canyon Drive P.O. Box 2739 Palm Springs, CA 92262	050243	07/13/2010	CA	
Elliot Hospital One Elliot Way Manchester, NH 03103	300012	07/13/2010	NH	
Marshall Medical Center South P.O. Box 758 Boaz, AL 35957	1306914882	07/13/2010	AL	
Kaiser Sunnyside Medical Center 10180 SE Sunnyside Road Clackamas, OR 97015	941105628	06/30/2010	OR	
Rockingham Memorial Hospital 235 Cantrell Avenue Harrisonburg, VA 22801	490004	06/30/2010	VA	
St. Mary's Hospital 700 S. Park Street Madison, WI 53715	520083	06/30/2010	WI	
Desert Regional Medical Center 1150 N. Indian Canyon Drive P.O. Box 2739 Palm Springs, CA 92263	050243	07/13/2010	CA	
Elliot Hospital One Elliot Way Manchester, NH 03103	300012	07/13/2010	NH	
Marshall Medical Center South P.O. Box 758 Boaz, AL 35957	1306914882	07/13/2010	AL	
Kaiser Sunnyside Medical Center 10180 SE Sunnyside Road Clackamas, OR 97015	941105628	06/30/2010	OR	
Rockingham Memorial Hospital 235 Cantrell Avenue Harrisonburg, VA 22801	490004	06/30/2010	VA	
St. Mary's Hospital 700 S. Park Street Madison, WI 53715	520083	06/30/2010	WI	
Uniontown Hospital 500 West Berkeley Street Uniontown, PA 15401-5596	390041	08/20/2010	PA	
Valley View Medical Center 5330 S. Highway 95 Fort Mohave, AZ 86426	30117	08/25/2010	AZ	
Shaw Heart and Vascular Specialists 2801 N W Mercy Drive #300 Roseburg, OR 97471	380027	09/10/2010	OR	
Paris Regional Medical Center 820 Clarksville Street Paris, TX 75460	450196	09/17/2010	TX	
Elkhart General Healthcare System 600 East Boulevard Elkhart, IN 46514	15-0018	10/04/2010	IN	
Jefferson Regional Medical Center PO Box 350 Crystal City, MO 63019-0350	260023	10/13/2010	MO	
The Medical Center of Aurora 1501 S Potomac Street Aurora, CO 80012	060100	10/21/2010	CO	
St. Mary's Medical Center 201 N W R.D. Mize Road Blue Springs, Missouri 64014	260193	10/21/2010	MO	
Baptist Hospital 2000 Church Street Nashville, Tennessee 37236	440133	10/21/2010	TN	
New York Downtown Hospital 170 William Street New York, NY 10038-2649	1053413989	11/03/2010	Ny	
St. Joseph Health Center 667 Eastland Ave, SE Warren, Ohio 44484-4503	360161 1629009964	11/09/2010	OH	
Nanticoke Memorial Hospital 801 Middleford Road Seaford, Delaware 19973	080006	11/09/2010	DE	
Henry Ford West Bloomfield Hospital 6777 W. Maple Road West Bloomfield, Michigan 48322	230302	11/18/2010	MI	
Beebe Medical Center 424 Savannah Road Lewes, DE 19958	080007	11/18/2010	DE	
Lane Regional Medical Center 6300 Main Street Zachary, LA 70791	190020	11/18/2010	LA	
Methodist Stone Oak Hospital 1139 E. Sonterra Boulevard. San Antonio, TX 78258	670055	11/30/2010	TX	
Evergreen Hospital Medical Center 12040 NE 128th Street, M/S 115 Kirkland, WA 98034	1033174933	12/14/2010	WA	
San Jacinto Methodist Hospital 4401 Garth Road Baytown, Texas 77521	450424	01/03/2011	TX	
Metropolitan Hospital (Doing business as Metro Health Hospital) 5900 Byron Center Ave. SW Wyoming, MI 49519	230236	01/03/2011	MI	
St. Elizabeth Regional Health East 1701 South Creasy Lane Lafayette, Indiana 47905	150109	01/03/2011	IN	
Mercy Medical Center 2710 Rife Medical Lane Rogers, Arkansas 72758	040010	01/07/2011	AR	
University Medical Center of El Paso 4815 Alameda Avenue El Paso, Texas 79905	450024	01/21/2011	TX	
Coliseum Medical Center 350 Hospital Drive Macon, GA 31217	110164	02/03/2011	GA	
Seton Medical Center Williamson 201 Seton Parkway Round Rock, TX 78665	670041	02/09/2011	TX	
North Shore Medical Center 1100 Northwest 95th Street Miami, Florida 33150-2098	100029	02/09/2011	FL	
Grady Memorial Hospital 80 Jesse Hill Jr. Drive, SE Atlanta, GA 30303	110079	02/17/2011	GA	
Cabell Huntington Hospital 1340 Hal Greer Boulevard Huntington, WV 25701	510055	03/17/2011	WV	
Heart of Florida Regional Medical Center P.O. Box 67 Haines City, FL 33845	100137	03/17/2011	FL	

Facility	Provider Number	Effective Date	State	Additional Information
Saint Alphonsus Regional Medical Center 1055 N. Curtis Road Boise, ID 83706	1992736649	04/05/2011	ID	
Lubbock Heart Hospital 4810 North Loop 289 Lubbock, TX 79416	450876	04/14/2011	TX	
Huguley Memorial Medical Center 11801 South Freeway Burleson, TX 76028	1033120423	04/21/2011	TX	

BILLING CODE 4120–01–C

Addendum VIII: American College of Cardiology's National Cardiovascular Data Registry Sites (January Through March 2011)

Addendum VIII includes a list of the American College of Cardiology's National Cardiovascular Data Registry Sites. We cover implantable cardioverter defibrillators (ICDs) for certain clinical indications, as long as information about the procedures is reported to a central registry. Detailed descriptions of the covered indications are available in the National Coverage Determination (NCD).

In January 2005, CMS established the ICD Abstraction Tool through the Quality Network Exchange (QNet) as a temporary data collecton mechanism. On October 27, 2005, CMS announced that the American College of Cardiology's National Cardiovascular Data Registry (ACC–NCDR) ICD Registry satisfies the data reporting requirements in the NCD. Hospitals needed to transition to the ACC–NCDR ICD Registry by April 2006.

In order to obtain reimbursement, Medicare national coverage policy requires that providers implanting ICDs for primary prevention clinical indications (that is, patients without a history of cardiac arrest or spontaneous arrhythmia) report data on each primary prevention ICD procedure. This policy became effective January 27, 2005. Details of the clinical indications that are covered by Medicare and their respective data reporting requirements are available in the Medicare National Coverage Determination (NCD) Manual, which is on the Centers for Medicare & Medicaid Services (CMS) Web site at *http://www.cms.hhs.gov/Manuals/IOM/itemdetail.asp?filterType=none&filterByDID=99&sortByDID=1&sortOrder=ascending&itemID=CMS014961.*

A provider can use either of two mechanisms to satisfy the data reporting requirement. Patients may be enrolled either in an Investigational Device Exemption trial studying ICDs as identified by the FDA or in the American College of Cardiology's National Cardiovascular Data Registry (ACC–NCDR) ICD registry. Therefore, in order for a beneficiary to receive a Medicare-covered ICD implantation for primary prevention, the beneficiary must receive the scan in a facility that participates in the ACC–NCDR ICD registry. We maintain a list of facilities that have been enrolled in this registry. The facilities that have been designated in the quarter covered by this notice are listed. The entire list of facilities that participate in the ACC–NCDR ICD registry can be found at *http://www.ncdr.com/webncdr/common.*

For the purposes of this quarterly notice, we list the Medicare-approved ICD facilities as of the ending date of the period covered by this notice. Based on our proposal for future quarterly notices, we would provide only the specific updates that have occurred in the three-month period along with a hyperlink to the Web site to access this information and a contact person for questions or additional information.

This information is available by accessing our Web site and clicking on the link for the American College of Cardiology's National Cardiovascular Data Registry at: *http://www.ncdr.com/webncdr/common.*

For questions or additional information, contact Joanna Baldwin, MS (410–786–7205).

BILLING CODE 4120–01–P

Facility Name	Address 1	Address 2	City	State	Zip Code
Abbott Northwestern Hospital	800 East 28th Street (Internal Zip 33210)		Minneapolis	MN	55407
Abilene Regional Medical Center	6250 Highway 83-84 Antilley Road		Abilene	TX	79606
Abington Memorial Hospital	1200 Old York Road	5 Toll	Abington	PA	19001
Adventist Bolingbrook Hospital	500 Remington Boulevard		Bolingbrook	IL	60440
Adventist Glen Oaks Hospital	701 Winthrop Avenue		Glendale Heights	IL	60139
Adventist Hinsdale Hospital	120 North Oak Street		Hinsdale	IL	60521
Adventist Medical Center	10123 SE Market Street		Portland	OR	97216
Advocate BroMenn Medical Center	1304 Franklin Avenue		Normal	IL	61761
Advocate Christ Medical Center	4440 West 95th Street		Oak Lawn	IL	60453
Advocate Condell Medical Center	801 S. Milwaukee Avenue		Libertyville	IL	60048
Advocate Good Shepherd Hospital	450 W. Highway 22		Barrington	IL	60010
Advocate Illinos Masonic Medical Center	836 W. Wellington Avenue		Chicago	IL	60657
Advocate Lutheran General Hospital	1775 Dempster Street		Park Ridge	IL	60068
Advocate South Suburban Hospital	17800 South Kedzie		Hazel Crest	IL	60429
Affinity Medical Center	400 Austin Avenue		Massillon	OH	44646
AHMC Anaheim Regional Medical Center	1111 W. La Palma Avenue		Anaheim	CA	92801
Aiken Regional Medical Center	302 University Parkway		Aiken	SC	29802
Alamance Regional Medical Center	PO Box 202		Burlington	NC	27216
Alaska Regional Hospital	2801 Debarr Road		Anchorage	AK	99508
Albany Medical Center Hospital	43 New Scotland Avenue		Albany	NY	12208
Albert Einstein Medical Center	5501 Old York Road	Levy Bldg. 3rd floor	Philadelphia	PA	19141
Alegent Health Bergan Mercy Medical Center	6901 North 72nd Streeet		Omaha	NE	68122
Alegent Health Immanuel Medical Center	6901 North 72nd Street	Suite 3000 N	Omaha	NE	68122-1709
Alegent Health Lakeside Hospital	6901 North 72nd Street		Omaha	NE	68122
Alegent Health Midlands Hospital	6901 North 72nd Street		Omaha	NE	68122
Alegent Health Mercy Hospital	6901 North 72nd Street	Suite 3000	Omaha	NE	68122
Alexian Brothers Medical Center	800 Biesterfield Road		Elk Grove Village	IL	60007-3311
Allegiance Health (W.A. Foote Memorial Hospital)	205 N. East Avenue	Heart Center 1st Floor	Jackson	MI	49201
Alta Bates Medical Center	2450 Ashby Avenue		Berkeley	CA	94705
Alta Bates Summit Medical Center	350 Hawthorne Avenue		Oakland	CA	94609
Alton Memorial Hospital	1 Memorial Drive		Alton	IL	62067
Altoona Hospital	620 Howard Avenue		Altoona	PA	16601
Altru Health System	1200 South Columbia Road		Grand Forks	ND	58201
Anderson Hospital	6800 State Route 162		Maryyville	IL	62062
AnMed Health	800 North Fant Street		Anderson	SC	29621
Anna Jaques Hospital	25 Highland Avenue		Newburyport	MA	01950
Anne Arundel Medical Center	2001 Medical Parkway		Annapolis	MD	21404
Appleton Medical Center/ThedaClark Medical Center	1818 N. Meade Street	Quality Dept. Rm 165-B	Appleton	WI	54911
Aria Health	Knights and Red Lion Roads		Philadelphia	PA	19114
Arizona Heart Hospital	1930 East Thomas Road		Phoenix	AZ	85016
Arkansas Heart Hospital	1701 S. Shackelford Road		Little Rock	AR	72202
Aroostock Medical Center	140 Academy Street		Presque Isle	ME	04769
Ashtabula County Medical Center	2420 Lake Avenue		Ashtabula	OH	44004
Aspirus Wausau Hospital	333 Pine Ridge Boulevard		Wausau	WI	54401
Athens Regional Medical Center	1199 Prince Avenue		Athens	GA	30606
Atlanta Medical Center	303 Parkway Drive NE		Atlanta	GA	30312
Atrium Medical Center	One Medical Center		Middletown	OH	45005
Aultman Hospital	2600 Sixth Street SW		Canton	OH	44710
Aurora BayCare Medical Center	2845 Greenbrier Road		Green Bay	WI	54308
Aurora Medical Center – Kenosha	2900 W. Oklahoma Avenue		Milwaukee	WI	53132
Aurora Medical Center of Washington County	2900 W. Oklahoma Avenue		Milwaukee	WI	53215

Facility Name	Address 1	Address 2	City	State	Zip Code
Aurora Medical Center Oshkosh	855 N. Westhaven Street		Oshkosh	WI	54904
Aurora Medical Center Summit	2900 W. Oklahoma Avenue		Milwaukee	WI	53215
Aurora Memorial Hospital of Burlington	2900 W. Oklahoma Avenue		Milwaukee	WI	53215
Aurora Sheboygan Memorial Medical Center	2629 N. 7th Street		Sheboygan	WI	53083
Aurora Sinai Medical Center	945 N. 12th Street		Milwaukee	WI	53233
Aurora West Allis Memorial Hospital	2900 W. Oklahoma Avenue		Milwaukee	WI	53215
Aventura Hospital and Medical Center	5631 Glencrest Boulevard		Tampa	FL	33625-1008
Avera Heart Hospital of South Dakota	4500 West 69th Street		Sioux Falls	SD	57108
Avera Sacred Heart Hospital	501 Summit		Yankton	SD	57078
Avera St. Luke's	305 South State Street		Aberdeen	SD	57401
Bakersfield Memorial Hospital	420 34th Street		Bakersfield	CA	93303-1888
Ball Memorial Hospital	2401 University Avenue		Muncie	IN	47303
Baltimore Washington Medical Center	301 Hospital Drive	2nd Fl. Cardiac Cath Lab	Glen Burnie	MD	21061
Banner Boswell Medical Center	10401 W. Thunderbird Boulevard		Sun City	AZ	85351
Banner Desert Medical Center	Banner Desert Medical Center, Quality Management	1400 S. Dobson Road	Mesa	AZ	85202
Banner Estrella Medical Center	9201 W. Thomas Road		Phoenix	AZ	85037
Banner Good Samaritan Med Center	1111 East McDowell Road		Phoenix	AZ	85006-2612
Banner Heart Hospital	6750 E. Baywood Avenue		Mesa	AZ	85206
Banner Thunderbird Med Center	5555 W. Thunderbird Road		Glendale	AZ	85306
Baptist Health Medical Center	9601 Interstate 630 Exit 7		Little Rock	AR	72205-7299
Baptist Health Medical Center	3333 Springhill Drive		North Little Rock	AR	72117
Baptist Hospital	4220 Harding Road		Nashville	TN	37202
Baptist Hospital East	4000 Kresge Way		Louisville	KY	40207
Baptist Hospital of Miami	8900 SW 88th Street		Miami	FL	33176
Baptist Hospital of Southeast Texas	PO Box 1591	3080 College Street	Beaumont	TX	77704
Baptist Hospital	1000 W. Moreno Street		Pensacola	FL	32501
Baptist Medical Center	800 Prudential Drive		Jacksonville	FL	32207
Baptist Medical Center	730 North Main Avenue	Suite 424	San Antonio	TX	78205
Baptist Memorial Hospital North Mississippi	2301 South Lamar Boulevard		Oxford	MS	38655
Baptist Memorial Hospital-Desoto	7601 Southcrest Parkway		Southaven	MS	38671
Baptist Memorial Hospital-Union City	1201 Bishop Street		Union City	TN	38261
Baptist St. Anthony's Health Systems	1600 Wallace Boulevard		Amarillo	TX	79106
Barberton Hospital	155 5th Street NE		Barberton	OH	44203
Barnes Jewish Hospital/Washington University	#1 Barnes Jewish Hospital Plaza	SW Tower-Main. Mailstop 90-59-315	Saint Louis	MO	63110-9930
Bassett Healthcare-(Mary Imogene Bassett Hospital)	One Atwell Road		Cooperstown	NY	13326
Baton Rouge General (Blue Bonnet)	8585 Picardy Avenue		Baton Rouge	LA	70809
Baton Rouge General (Mid City)	3600 Florida Boulevard		Baton Rouge	LA	70806
Battle Creek Health System	300 North Avenue		Battle Creek	MI	49016
Bay Medical Center	615 North Bonita Avenue		Panama City	FL	32401
Bay Regional Medical Center	1900 Columbus Avenue		Bay City	MI	48708
Bayhealth Medical Center(KGH)	640 S. State Street		Dover	DE	19901
Baylor All Saints Medical Center at Fort Worth	1400 8th Avenue		Fort Worth	TX	76104
Baylor Medical Center at Irving	1901 North MacArthur Boulevard		Irving	TX	75061
Bayshore Medical Center	4000 Spencer Highway		Pasadena	TX	77504
Baystate Medical Center	759 Chestnut Street	Springfield 4 4558	Springfield	MA	01199
Beaufort Memorial Hospital	955 Ribaut Road		Beaumont	SC	29902
Beauregard Memorial Hospital	600 S. Pine Street		Deridder	LA	70634
Bellin Memorial Hospital	744 S. Webster Avenue	Cardiac Data Center 5th Floor	Green Bay	WI	54301
Benefis Healthcare	1101 26th Street South		Great Falls	MT	59405-5161
Bert Fish Medical Center	401 Palmetto Street		New Smyrna Beach	FL	32168

Facility Name	Address 1	Address 2	City	State	Zip Code
Bethesda Memorial Hospital	2815 S. Seacrest Boulevard		Boynton Beach	FL	33435
Bethesda North Hospitals	375 Dixmyth Avenue		Cincinnati	OH	45220-2489
Beverly Hospital	85 Herrick Street		Beverly	MA	01915
Bexar County Hospital District dba University Health	4502 Medical Drive	Stop 34-1	San Antonio	TX	78229
Billings Clinic (formerly Deaconess)	2800 9th Avenue, North		Billings	MT	59101
Blake Medical Center	2020 59th Street West		Bradenton	FL	34209
Blessing Hospital	1005 Broadway	PO Box 7005	Quincy	IL	62305-7005
Bloomington Hospital	601 W. 2nd Street	PO Box 1149	Bloomington	IN	47403
Bon Secours DePaul Medical Center	150 Kingsley Lane		Norfolk	VA	23505
Bon Secours Hospital	2000 W. Baltimore Street		Baltimore	MD	21223
Bon Secours – Maryview Medical Center	3636 High Street		Portsmouth	VA	23707
Bon Secours- Memorial Regional Medical Center	8260 Atlee Road		Mechanicsville	VA	23116
Bon Secours St Francis Medical Center	13710 St. Francis Boulevard		Midlothian	VA	23114
Bon Secours St. Marys Hospital	5801 Bremo Road	Cardiac Cath Lab	Richmond	VA	23226
Boone Hospital Center	1600 E. Broadway		Columbia	MO	65201-5897
Borgess Medical Center	1521 Gull Road		Kalamazoo	MI	49048
Boston Medical Center	One Boston Medical Place		Boston	MA	02118
Bothwell Regional Health Center	601 East 14th Street		Sedalia	MO	65301
Botsford Hospital	28050 Grand River Avenue		Farmington Hills	MI	48336
Boulder Community Hospital	1100 Balsam Avenue		Boulder	CO	80304
Brandon Regional Hospital	119 Oakfield Drive		Brandon	FL	33511
Brigham & Womens Hospital	75 Francis Street	L258A	Boston	MA	02115
Bronson Methodist Hospital	601 John Street		Kalamazoo	MI	49007-5348
Brookdale Hospital & Medical Center	1 Brookdale Plaza		Brooklyn	NY	11212
Brooklyn Hospital Center	121 DeKalb Avenue		Brooklyn	NY	11201
Brookwood Medical Center	2010 Brookwood Medical Center		Birmingham	AL	35209
Broward General Medical Center	1600 S. Andrews Avenue		Ft. Lauderdale	FL	33316
Bryan LGH Medical Center	1600 South 48th Street		Lincoln	NE	68526
Bryn Mawr Hospital	Suite 557 Lankenau MOB East	100 Lancaster Avenue	Wynnewood	PA	19096
Cabell Huntington Hospital	1340 Hal Greer Boulevard		Huntington	WV	25701
California Pacific Medical Center	2330 Clay Street, Stern Building, Room #103	Stern Building, Room #103	San Francisco	CA	94115
CAMC Teays Valley Hospital	1400 Hospital Drive		Hurricane	WI	25526
Camden-Clark Memorial Hospital	800 Garfield Avenue		Parkersburg	WV	26101
Cape Canaveral Hospital	701 West Cocoa Beach Causeway		Cocoa Beach	FL	32931
Cape Cod Hospital	40 Quinlan Way		Hyannis	MA	02601
Cape Fear Valley Health System	303 Wagoner Drive		Fayetteville	NC	28303-4646
Capital Regional Medical Center	2626 Capital Medical Boulevard		Tallahassee	FL	32308
Carilion Roanoke Memorial Hosp	Att: Cardiac Cath Lab	PO Box 13367	Roanoke	VA	24033-3367
Caritas Norwood Hospital	800 Washington Street		Norwood	MA	02062
Carle Foundation Hospital	611 W. Park Street		Urbana	IL	61801
Carolina East Medical Center	2000 Neuse Boulevard	PO Box 12157	New Bern	NC	28560
Carolinas Hospital System	805 Pamplico Highway		Florence	SC	29505
Carolinas Medical Center	720 E. Morehead Street		Charlotte	NC	28202
Carolinas Medical Center – Mercy	720 E. Morehead Street	Cath Lab	Charlotte	NC	28202
Carondelet Heart Institute at St. Joseph Medical Center	1000 Carondelet Drive		Kansas City	MO	64114
Carroll Hospital Center	200 Memorial Avenue		Westminster	MD	21157
Carson Tahoe Regional Medical Center	1600 Medical Parkway		Carson City	NV	89706
Cartersville Medical Center	960 Joe Frank Harris Parkway		Cartersville	GA	30120
Castleview Hospital	300 North Hospital Drive		Price	UT	84501
Catawba Valley Medical Center	810 Fairgrove Church Road		Hickory	NC	28602
Catholic Medical Center	100 McGregor Street	Level C Room 248	Manchester	NH	03102-3770

Facility Name	Address 1	Address 2	City	State	Zip Code
Cayuga Medical Center at Ithaca	101 Dates Drive		Ithaca	NY	14850
Cedars-Sinai Health Systems	8700 Beverly Boulevard	MGB 901	Los Angeles	CA	90048
Centennial Hills Hospital Medical Center	6900 N. Durango Drive		Las Vegas	NV	89149-4409
Centennial Medical Center	12505 Lebanon Boulevard		Frisco	TX	75035
Centennial Medical Center	2300 Patterson Street		Nashville	TN	37203
Centerpoint Medical Center	19600 E. 39th Street		Independence	MO	64057
Centra Lynchburg General Hospital	1901 Tate Springs Road	Cardiac Cath Lab	Lynchburg	VA	24501
Central Baptist Hospital	1800 Nicholasville Road Suite 401		Lexington	KY	40503
Central DuPage Hospital	25 N. Winfield Road		Winfield	IL	60190
Central Florida Regional Hospital	1401W. Seminole Boulevard		Sanford	FL	32771
Central Maine Medical Center	CMHVI 60 High Street		Lewiston	ME	04240
Central Minnesota Heart Center at St. Cloud Hospital	1406 Sixth Avenue North		St. Cloud	MN	56303
Chandler Regional Medical Center	475 S. Dobson Road		Chandler	AZ	85224
Charleston Area Medical Center	501 Morris Street		Charleston	WV	25301
Charlotte Regional Medical Center	809 East Marion Avenue		Punta Gorda	FL	33950
Charlton Memorial Hospital	363 Highland Avenue		Fall River	MA	02720-3700
Chattanooga-Hamilton County Hospital Authority/ER	975 E. Third Street		Chattanooga	TN	37403
Chesapeake General Hospital	736 Battlefield Boulevard North		Chesapeake	VA	23320
Cheshire Medical Center	580 Court Street		Keene	NH	03431
Chester County Hospital	701 E. Marshall Street		West Chester	PA	19380
Chester River Hospital Center	100 Brown Street		Chestertown	MD	21620
Cheyenne Regional Medical Center	214 E. 23rd Street		Cheyenne	WY	82001
Children's Hospital Boston	300 Longwood Avenue		Boston	MA	02115
Christian Hospital	11133 Dunn Road		St Louis	MO	63136
Christiana Care Health System	4755 Ogletown-Stanton Road		Newark	DE	19718
Christus Saint Elizabeth Hospital	2830 Calder Street		Beaumont	TX	77702
Christus Hospital-St. Mary	3600 Gates Boulevard		Port Arthur	TX	77642
Christus Spohn Hospital Corpus Christi – Shoreline	600 Elizabeth Street		Corpus Christi	TX	78404
Christus St. John Hospital	18300 St. John Drive	Cath Lab	Nassau Bay	TX	77058
Christus – Schumpert Highland Hospital	One St. Mary Place		Shreveport	LA	71101
Citrus Memorial Health System	502 W. Highland Boulevard		Inverness	FL	34452
Citrus Valley Medical Center	1115 South Sunset Avenue		West Covina	CA	91790
CJW Medical Center	7101 Jahnke Road		Richmond	VA	23225-4044
Claremore Regional Hospital	1202 N Muskogee Place		Claremore	OK	74017
Clarian Health Partners-Methodist Hospital Campus	1701 N. Senate Boulevard	Room A1082	Indianapolis	IN	46202
Clarian North Medical Center	11725 Illinois Street B-178		Carmel	IN	46032
Clear Lake Regional Medical Center	500 Medical Center Boulevard		Webster	TX	77598
Cleveland Clinic Florida	3100 Weston Road		Weston	FL	33331
Coliseum Medical Centers	350 Hospital Drive		Macon	GA	31217
Columbia Hospital	4425 North Port Washington Road		Glendale	WI	53212
Columbia St. Mary's Hospital Milwaukee	2323 N. Lake Drive		Milwaukee	WI	53211
Columbia St. Mary's Hospital Ozaukee	2323 N. Lake Drive		Milwaukee	WI	53211
Columbus Regional Hospital	2400 17th Street		Columbus	IN	47201
Comanche County Memorial Hospital	3401 W. Gore Boulevard	PO Box 129	Lawton	OK	73505
Community Health Partners	3700 Kolbe Road		Lorain	OH	44053
Community Hospital	5637 Marine Parkway		New Port Richey	FL	34652
Community Hospital	The Community Hospital	901 MacArthur Boulevard.	Munster	IN	46321
Community Hospital and Wellness Center	433 West High Street		Bryan	OH	43506
Community Hospital East	Cardiovascular Services	1500 North Ritter Ave.	Indianapolis	IN	46219
Community Hospital of the Monterey Peninsula	PO Box HH		Monterey	CA	93942-1085
Community Hospital South	1500 N. Ritter Avenue		Indianapolis	IN	46219-3027
Community Medical Center	2827 Fort Missoula Road		Missola	MT	59804

Facility Name	Address 1	Address 2	City	State	Zip Code
Community Medical Center	99 Highway 37 West		Toms River	NJ	08775
Community Medical Center	1800 Mulberry Street		Scranton	PA	18510
Community Medical Center – Clovis	2755 Herndon Avenue		Clovis	CA	96311
Community Memorial Hospital	147 N. Brent Street		Ventura	CA	93003
Community Memorial Hospital	W180 N8085 Town Hall Road		Menomonee Falls	WI	53052
Conroe Regional Medical Center	504 Medical Center Boulevard		Conroe	TX	77304
Covenant Heart Institute	3615 19th Street		Lubbock	TX	79410
Conway Medical Center	300 Singleton Ridge Road		Conway	SC	29528
Conway Regional Medical Center	2302 College Avenue		Conway	AR	72034-6226
Cookeville Regional Medical Center	1 Medical Center Boulevard		Cookeville	TN	38501
Cooley Dickinson Hospital	30 Locust Street		Northampton	MA	01061
Cooper University Hospital	One Cooper Plaza	Cath Lab	Camden	NJ	08103
Coral Gables Hospital	3100 Douglas Road		Coral Gables	FL	33134
Corpus Christi Medical Center	7101 SPID		Corpus Christi	TX	78412
Covenant Healthcare	1447 N. Harrison Street		Saginaw	MI	48602
Covenant Medical Center	3421 West Ninth Street		Waterloo	IA	50702
Cox Medical Center South	3801 S. National Avenue		Springfield	MO	65807
Creighton University Medical Center	601 N. 30th Street		Omaha	NE	68131
Crestwood Medical CenterTriad Hospitals, Inc.	One Hospital Drive		Huntsville	AL	35801-3495
Crittenton Hospital Medical Center	1101 W. University Drive		Rochester	MI	48307-1831
Crouse Hospital	736 Irving Avenue		Syracuse	NY	13210
CVPH Medical Center	75 Beekman Street		Plattsburgh	NY	12901-1493
Cypress Fairbanks Medical Center	10655 Steepletop Drive		Houston	TX	77065
Dallas Regional Medical Center	1011 N. Galloway Avenue		Mesquite	TX	75149
Dameron Hospital	525 W. Acacia Street		Stockton	CA	95203
Danbury Hospital	24 Hospital Avenue	Cardiology 2 South	Danbury	CT	06810
Danville Regional Medical Center	142 South Main Street		Danville	VA	24541
Dauterive Hospital	600 N. Lewis Street		New Iberia	LA	70563
Davis Hospital	1600 West Antelope Drive		Layton	UT	84041
DCH Regional Medical Center	809 University Boulevard E		Tuscaloosa	AL	35401-2029
Deaconess Hospital	600 Mary Street		Evansville	IN	47747
Deaconess Medical Center	W. 800 Fifth Avenue		Spokane	WA	99204
Deborah Heart & Lung Center	200 Trenton Road		Browns Mills	NJ	08015
Decatur General Hospital	1201 7th Street		Decatur	AL	35601
Decatur Memorial Hospital	2300 N. Edward Street		Decatur	IL	62526
Dekalb Medical Center	2701 N. Decatur Road		Decatur	GA	30033
Dekalb Regional Medical Center	200 Medical Center Drive		Fort Payne	AL	35968
Del Sol Medical Center	10301 Gateway West		El Pasoq	TX	79925
Delray Medical Center	5352 Linton Boulevard		Delray Beach	FL	33484
Denton Regional Medical Center	3535 South I-35E		Denton	TX	76205
Denver Health Medical Center	777 Bannock Street		Denver	CO	80204
DePaul Health Center	12303 DePaul Drive		Bridgeton	MO	63044
Des Peres Hospital	2345 Dougherty Ferry Road		St. Louis	MO	63122
Desert Regional Medical Center	1150 N. Indian Canyon		Palm Springs	CA	92262
Desert Springs Hospital	2075 E. Flamingo Road		Las Vegas	NV	89119
DeTar Hospital	506 E. San Antonio Street		Victoria	TX	77902
Dixie Regional Medical Center	1380 E. Medical Drive		St. George	UT	84790
Doctors Hospital	5000 University Drive		Miami	FL	33146
Doctors Hospital	5100 West Broad Street		Columbus	OH	43228
Doctors Hospital	9440 Poppy Drive		Dallas	TX	75218
Doctors Hospital at Renaissance	5501 S. McColl Road		Edinburg	TX	78539
Doctors Hospital – Augusta	3651 Wheeler Drive		Augusta	GA	30909

Facility Name	Address 1	Address 2	City	State	Zip Code
Doctors Hospital of Sarasota	5731 Bee Ridge Road		Sarasota	FL	34233
Doctors Medical Center	1441 Florida Avenue		Modesto	CA	95350
Dominican Santa Cruz Hospital	1555 Soquel Drive		Santa Cruz	CA	95065
Doylestown Hospital	595 West State Street		Doylestown	PA	18901
Dr. P. Phillips Hospital	1414 Kuhl Avenue		Orlando	FL	32806
DuBois Regional Medical Center	100 Hospital Avenue		DuBois	PA	15801
Duke Raleigh Hospital	3400 Wake Forest Road		Raleigh	NC	27609
Duke University Hospital	Erwin Road DUMC 3943		Durham	NC	27710
Dunn Memorial Hospital	1600 23rd Street		Bedford	ID	47421
Durham Regional Hospital	3643 N. Roxboro Road		Durham	NC	27704
East Alabama Medical Center	2000 Pepperell Parkway		Opelika	AL	36830
East Cooper Medical Center	2000 Hospital Drive		Charleston	SC	29464
East Georgia Regional Medical Center	1499 Fair Road (PO Box 1048)		Statesboro	GA	30459
East Jefferson General Hospital	4200 Houma Boulevard	Quality Mgmt. Dept.	Metairie	LA	70006
East Ohio Regional Hospital	90 N. 4th Street		Martins Ferry	OH	43935
Eastern Idaho RMC	3100 Channing Way		Idaho Falls	ID	83404
Eastern Maine Medical Center	489 State Street	PO Box 404	Bangor	ME	04402-0404
Edward Hospital	801 S. Washington Street	3rd floor Heart Hospital	Naperville	IL	60540
Eisenhower Medical Center	39000 Bob Hope Drive		Rancho Mirage	CA	92270
El Camino Hospital	2500 Grant Road		Mountain View	CA	94040
Elliot Hospital	1 Elliot Way		Manchester	NH	03103
Elmhurst Memorial Hospital Marquardt Memorial Lib	200 Berteau Avenue		Elmhurst	IL	60126
EMH Regional Medical Center	630 East River Street		Elyria	OH	44035
Emory Crawford Long Hospital	1364 Clifton Road NE		Atlanta	GA	30322
Emory Dunwoody Medical Center	4575 North Shallowford Road		Atlanta	GA	30338
Emory Eastside Medical Center	1700 Medical Way		Snellville	GA	30078
Emory Johns Creek	6325 Hospital Parkway		Johns Creek	GA	30097
Emory University Hospital	1364 Clifton Road NE	Office C430	Atlanta	GA	30322
Englewood Community Hospital (HCA)	700 Medical Boulevard		Englewood	FL	34223
Englewood Hospital & Medical Center	350 Engle Street		Englewood	NJ	07631
Enloe Medical Center	1600 Esplanade		Chico	CA	95926
Erie County Medical Center	462 Grider Street		Buffalo	NY	14215
Evergreen Healthcare	12040 NE 128th St., MS 21		Kirkland	WA	98034
Exempla Good Samaritan Medical Center	2420 W. 26th Avenue Building D Suite 100		Denver	CO	80211
Exempla Lutheran Medical Center	2420 W. 26th Avenue Building D Suite 140		Denver	CO	80211
Exempla Saint Joseph Hospital	2420 W. 26th Avenue Building D Suite 140		Denver	CO	80211
F.E. Lajam, MD PC	140-04 58th Road		Flushing	NY	11355
Fairfield Cardiac Cath Labs	3000 Mack Road	Suite 200	Fairfield	OH	45014
Fairfield Medical Center	401 N. Ewing Street		Lancaster	OH	43130
Fairview Hospital	18101 Lorain Road #329		Cleveland	OH	44111
Fairview Park Hospital	PO Box 1408		Dublin	GA	31021
Faith Regional Health Services	2700 W. Norfolk Avenue		Norfolk	NE	68701
Fawcett Memorial Hospital	21298 Olean Boulevard		Port Charlotte	FL	33949-4960
FirstHealth Moore Regional Hospital	155 Memorial Drive		Pinehurst	NC	28374
Fisher-Titus Medical Center	272 Benedict Avenue		Norwalk	OH	44857
Flagler Hospital	400 Health Park Boulevard.		St. Augustine	FL	32086
Flagstaff Medical Center	1200 N. Beaver Street		Flagstaff	AZ	86001-3198
Fletcher Allen Health Care	111 Colchester Avenue		Burlington	VT	05401
Florida Hospital	601 East Rollins Street	Box 99	Orlando	FL	32803

Facility Name	Address 1	Address 2	City	State	Zip Code
Florida Hospital Deland	701 West Plymouth Avenue		Deland	FL	32720
Florida Hospital Waterman, Inc.	1000 Waterman Way		Tavares	FL	32778
Florida Hospital Zephyrhills	5631 Glencrest Boulevard		Tampa	FL	33625-1008
Flowers Hospital	4370 West Main Street		Dothan	AL	36305
Floyd Medical Center	304 Turner McCall Boulevard		Rome	GA	30165
Floyd Memorial Hospital and Health Services	1850 State Street		New Albany	IN	47150
Forrest General Hospital	6051 Highway 49 South		Hattiesburg	MS	39404-6389
Forsyth Medical Center	3333 Silas Creek Parkway	Clinical Improvement Box 102	Winston-Salem	NC	27103
Fort Sanders Regional Medical Center	1901 Clinch Avenue		Knoxville	TN	37916-2307
Fort Walton Beach Medical Center	1000 Mar Walt Drive		Fort Walton Beach	FL	32547
Fountain Valley Regional Hosp	17100 Euclid Street		Fountain Valley	CA	92708-4004
Frankfort Regional Medical Center	299 Kings Daughter Drive		Frankfort	KY	40601
Franklin Square Hospital	9000 Franklin Square Drive		Baltimore	MD	21237
Frederick Memorial Hospital	400 W. Seventh Street		Frederick	MD	21710
Freeman Hospital	1102 W. 32nd Street	1102 W. 32nd Street	Joplin	MO	64804
Fremont Area Medical Center	450 East 23rd Street		Fremont	NE	68025
French Hospital Medical Center	1911 Johnson Avenue		San Luis Obispo	CA	93401
Fresno Community Hospital and Medical Center	2823 Fresno Street		Fresno	CA	93721
Fresno Heart Hospital	15 East Audubon Drive		Fresno	CA	93720
Froedtert Hospital	9200 W. Wisconsin Avenue		Milwaukee	WI	53226
Frye Regional Medical Center	420 N. Center Street		Hickory	NC	28601
Gadsden Regional Medical Center	1007 Goodyear Avenue		Gadsden	AL	35903
Galichia Heart Hospital	2610 N. Woodlawn Boulevard		Wichita	KS	67220
Garden City Hospital	6245 Inkster Road		Garden City	MI	48135-4001
Garden Grove Hospital	12601 Garden Grove Boulevard		Garden Grove	CA	92843
Gaston Memorial Hospital	2525 Court Drive		Gastonia	NC	28054
Gateway Regional Medical Center	2100 Madison Avenue		Granite City	IL	62040
Geisinger Medical Center	100 North Academy Avenue		Danville	PA	17822-2160
Geisinger Wyoming Valley Medical Center	100 North Academy Avenue		Danville	PA	17822-2160
Genesis Healthcare System	800 Forest Avenue		Zanesville	OH	43701
Genesis Medical Center	1236 East Rusholme Street	Suite 190	Davenport	IA	52803-2459
Genesys Regional Medical Center	One Genesys Parkway		Grand Blanc	MI	48439
Georgetown University Hospital	3800 Reservoir Road NW		Washington	DC	20007
Gerald Champion Reginal Medical	2669 North Scenic Drive		Alamogordo	NM	88310
Glenbrook Hospital	2100 Pfingsten Road		Evanston	IL	60026
Glendale Adventist Medical Center	1509 Wilson Terrace		Glendale	CA	91206
Glendale Memorial Hospital and Health Center	1420 S. Central Avenue		Glendale	CA	91204
Glens Falls Hospital	100 Park Street		Glens Falls	NY	12801
Glenwood Regional Medical Center	503 McMillan Road		Monroe	LA	71291
Gnaden Huetten Memorial Hospital	211 N 12th Street		Lehighton	PA	18235
Good Samaritan	407 14th Avenue SE		Puyallup	WA	98371
Good Samaritan Heart Center	520 South 7th Street		Vincennes	IN	47591
Good Samaritan Hospital	2425 Samaritan Drive	2425 Samaritan Drive	San Jose	CA	95124
Good Samaritan Hospital	605 N. 12th Street		Mount Vernon	IL	62864
Good Samaritan Hospital	3815 Highland Avenue		Downers Grove	IL	60515
Good Samaritan Hospital	10 East 31st Street		Kearney	NE	68847
Good Samaritan Hospital	255 Lafayette Avenue		Suffern	NY	10901
Good Samaritan Hospital	375 Dixmyth Avenue		Cincinnati	OH	45220-2489
Good Samaritan Hospital of Maryland	5601 Loch Raven Boulevard		Baltimore	MD	21239
Good Samaritan Medical Center	1309 North Flagler Drive		West Palm Beach	FL	33401
Good Samaritan Regional Medical Center	3600 NW Samaritan Drive		Corvallis	OR	97330
Graduate Hospital	1800 Lombard Street		Philadelphia	PA	19146

Facility Name	Address 1	Address 2	City	State	Zip Code
Grady Memorial Hospital	561 West Central Avenue		Delaware	OH	43015-1489
Grand Strand Regional Medical Center	809 82nd Parkway		Myrtle Beach	SC	29572
Grandview Medical Center	405 W. Grand Avenue		Dayton	OH	45405
Grant Medical Center	111 S. Grant Avenue		Columbus	OH	43215
Gratiot Medical Center	4401 Campus Ridge Drive		Midland	MI	48670
Great Plains Regional Medical Center	Box 2339		Elk City	OK	73648
Great River Medical Center	1221 S. Gear Avenue		West Burlington	IA	52655
Greater Baltimore Medical Center	GBMC – Cardiac Cath Lab	6701 N. Charles Street	Towson	MD	21204
Greene Memorial Hospital	1141 N. Monroe Drive		Xenia	OH	45385
Greenview Regional Hospital	1801 Ashley Circle		Bowling Green	KY	42104
Greenville Memorial Hospital	701 Grove Road		Greenville	SC	29605
Greenwich Hospital	5 Perryridge Road		Greenwich	CT	06830
Gulf Coast Medical Center	449 W. 23rd Street		Panama City	FL	32406-5309
Gulf Coast Medical Center (formerly Southwest Regional)	9981 S. Healthpark Drive		Fort Meyers	FL	33908
Gundersen Lutheran Medical Center, Inc.	1900 South Avenue	H06-004	LaCrosse	WI	54601
Gwinnett Hospital System	1000 Medical Center Boulevard		Lawrenceville	GA	30045
Hackensack University Medical Center	30 Prospect Avenue		Hackensack	NJ	07601
Hahnemann University Hospital	230 N. Broad Street		Philadelphia	PA	19102
Halifax Medical Center	303 N. Clyde Morris Boulevard		Daytona Beach	FL	32114-2732
Halifax Regional Hospital	2204 Wilborn Avenue		South Boston	VA	24592
Hamilton Medical Center	1200 Memorial Drive		Dalton	GA	30720
Hamot Medical Center	201 State Street		Erie	PA	16550
Hannibal Regional Hospital	6000 Hospital Drive	PO Box 551	Hannibal	MO	63401
Hardin Memorial Hospital	913 N Dixie Avenue		Elizabethtown	KY	42701
Harlingen Medical Center	5501 South Expressway 77		Harlingen	TX	78550
Harris County Hospitals	1504 Taub Loop		Houston	TX	77030
Harris Methodist Fort Worth	1301 Pennsylvania Avenue		Fort Worth	TX	76104
Harris Methodist HEB	1600 Hospital Parkway		Bedford	TX	76022
Harrison Medical Center	2520 Cherry Avenue		Bremerton	WA	98310
Hartford Hospital	80 Seymour Street		Hartford	CT	06102-8000
Harton Regional Medical Center	1801 N. Jackson Street		Tullahoma	TN	37388
Havasu Regional Medical Center	101 Civic Center Lane		Lake Havasu City	AZ	86403
Hawaii Medical Center East, LLC	2230 Liliha Street		Honolulu	HI	96817
Hawaii Medical Center West	91-2141 Fort Weaver Road		Ewa Beach	HI	96706
Hays Medical Center	2220 Canterbury Road		Hays	KS	67601
Hazard ARH Regional Medical Center	100 Medical Center Drive		Hazard	KY	41701
Health Care Authority for Baptist Health	2105 East South Boulevard		Montgomery	AL	36116
Heart and Lung Clinic	900 East Broadway Box 5510		Bismark	ND	58502
Heart Center of Indiana	8333 Nabb Road	Suite 330	Indianapolis	IN	46290
Heart Hospital of Austin	3801 N. Lamar Boulevard		Austin	TX	78756
Heart Hospital of Lafayette	1105 Kaliste Saloom Road		Lafayette	LA	70508
Heart Hospital of New Mexico	8719 Springhill Drive NW		Albuqerque	NM	87114
Heart of Florida Regional Medical Center	40100 Highway 27		Davenport	FL	33837
Heart of Lancaster Regional Medical Center	250 College Avenue		Lancaster	PA	17604
Heartland Regional Medical Center	3333 W. Deyoung Street		Marion	IL	62959
Helen Ellis Memorial	1395 South Pinella Avenue		Tarpon Springs	FL	34689
Hemet Valley Medical Center	1117 E. Devonshire Avenue		Hemet	CA	92543
Hendersonville Medical Center	355 New Shackle Island Road		Hendersonville	TN	37075
Hennepin County Medical Center	701 Park Avenue		Minneapolis	MN	55415-1829
Henrico Doctors Hospital	1602 Skipwith Road	Cardiac Cath Lab	Richmond	VA	23229
Henry Ford Macomb	15855 Nineteen Mile Road		Clinton Township	MI	48038
Henry Mayo Newhall Memorial Hospital	23845 McBean Parkway		Valencia	CA	91350

Facility Name	Address 1	Address 2	City	State	Zip Code
Henry Medical Center, Inc.	1133 Eagles Landing Parkway		Stockbridge	GA	30281
Hialeah Hospital	651 East 25th Street		Hialeah	FL	33013
High Point Regional Hospital	601 N. Elm Street		High Point	NC	27261
Highland Park Hospital	718 Glenview Avenue		Highland Park	IL	60035
Hillcrest Baptist Medical Center	100 Hillcrest Medical Boulevard		Waco	TX	76712
Hillcrest Hospital	6780 Mayfield Road		Mayfield Heights	OH	44124
Hillcrest Medical Center	1120 S. Utica Avenue	3 West	Tulsa	OK	74104
Hilton Head Hospital	25 Hospital Center Boulevard		Hilton Head	SC	29926
HMA-Physician Management Region 25 Disb. Acct. (Physician's Regional)	6101 Pine Ridge Road		Naples	FL	34119
Hoag Memorial Hospital Presbyterian	One Hoag Drive	PO Box 6100	Newport Beach	CA	92658
Holland Hospital	602 Michigan Avenue		Holland	MI	49423
Holmes Regional Medical Center	1350 South Hickory Street		Melbourne	FL	32901
Holy Cross Hospital	4795 N. Federal Highway		Ft. Lauderdale	FL	33308
Holy Cross Hospital of Silver Spring, Inc.	1500 Forest Glen Road	Cath Lab	Silver Spring	MD	20910
Holy Spirit Health System	503 N 21st Street	Heart Center Admin.	Camp Hill	PA	17011-2204
Holzer Cardiovascular Institute	90 Jackson Pike		Gallipolis	OH	45631
Hopkins County Memorial Hospital	115 Airport Road		Sulphur Springs	TX	75482
Hospital of St. Raphael	Cardiac Cath Lab, 1450 Chapel Street		New Haven	CT	06511
Hospital of the University of Pennsylvania	9011 E. Gates 3400 Spruce Street		Philadelphia	PA	19104
Houston Northwest Medical Center	710 FM 1960 Road West		Houston	TX	77090
Howard County General Hospital	5755 Cedar Lane		Columbia	MD	21044
Howard Regional Health System	3500 South LaFountain Street		Kokomo	IN	46904-9011
Hualapai Mountain Medical Center	3801 Santa Rosa Drive		Kingman	AZ	86401
Huguley Memorial Medical Center	11801 South Freeway		Burleson	TX	76028
Huntington Hospital	100 W. California Boulevard		Pasadena	CA	91109
Huntington Hospital	270 Park Avenue	Arrhyyhmia Services, Huntington Hospital	Huntington	NY	11743
Huntsville Hospital	101 Sivley Road		Huntsville	AL	35801
Hurley Medical Center	1 Hurley Plaza		Flint	MI	48503
Huron Valley Sinai Hospital	1 William Carls Drive		Commerce Township	MI	48382
Iberia Medical Center	2315 East Main Street		New Iberia	LA	70560
Immanuel-St. Joseph's Hospital	1025 Marsh Street		Mankato	MN	56001
Indian River Medical Center	1000 36th Street		Vero Beach	FL	32960
Indiana Regional Medical Center Cardiology Dept.	835 Hospital Road		Indiana	PA	15701
Ingalls Hospital	One Ingalls Drive		Harvey	IL	60426
Ingham Regional Medical Center	401 W. Greenlawn Avenue		Lansing	MI	48910
Innovis Health	3000 32nd Avenue SW		Fargo	ND	58104
Inova Alexandria Hospital	3289 Woodburn Road		Annandale	VA	22003
Inova Fairfax Hospital/Inova Heart & Vascular Institute	3300 Gallows Road		Falls Church	VA	22042
Inova Loudoun Hospital	3289 Woodburn Road	Suite 235	Falls Church	VA	22042
Integris Baptist Medical Center	3433 NW 56th Street, Suite 805		Oklahoma City	OK	73112
Integris Health	600 South Monroe Street		Enid	OK	73701
Interfaith Medical Center	1545 Atlantic Avenue		Brooklyn	NY	11213
Interim LSU Public Hospital	2021 Perdido	Suite 708	New Orleans	LA	70112
Iroquois Memorial Hospital	200 Fairman Avenue		Watseka	IL	60970
Jackson Hospital and Clinic	1725 Pine Street		Montgomery	AL	36106
Jackson Madison General Hospital	620 Skyline Drive		Jackson	TN	38301
Jackson North Medical Center	1611 NW 12th Avenue		Miami	FL	33136
Jamaica Hospital Medical Center	8900 Van Wyck Expressway		Jamaica	NY	11418
Jane Phillips Memorial Medical Center	3500 Frank Phillips Boulevard		Bartlesville	OK	74006

Facility Name	Address 1	Address 2	City	State	Zip Code
Jeff Anderson Regional Medical Center	2124 14th Street		Meridian	MS	39301
Jefferson Memorial Hospital	PO BOX 350		Crystal City	MO	63019
Jefferson Regional Medical Center	1600 West 40th Avenue		Pine Bluff	AR	71603
Jefferson Regional Medical Center	PO Box 18119 565 Coal Valley Road		Pittsburgh	PA	15236-0119
Jersey Shore University Medical Center	1945 State Route 33		Neptune	NJ	07753
Jewish Hospital	4777 East Galbraith Road		Cincinnati	OH	45236
Jewish Hospital	200 Abraham Flexner Way		Louisville	KY	40202
JFK Medical Center	5631 Glencrest Boulevard		Tampa	FL	33625-1008
John C. Lincoln Hospital – Deer Valley	19829 N. 27th Avenue		Phoenix	AZ	85027-4002
John C. Lincoln Hospital – North Mountain	250 E. Dunlap Avenue		Phoenix	AZ	85020-2871
John F. Kennedy Memorial Hospital	47111 Monroe Street		Indio	CA	92201
John Muir Medical Center – Concord Campus	1601 Ygnacio Valley Road		Walnut Creek	CA	94550
John Muir – Walnut Creek	1601 Ygnacio Valley Road		Walnut Creek	CA	94550
Johns Hopkins Hospital	600 N. Wolfe Street		Baltimore	MD	21287
Kadlec Medical Center	888 Swift Boulevard		Richland	WA	99352
Kaiser Foundation Hospital	4867 Sunset Boulevard		Los Angeles	CA	90027
Kaiser Permanente –Panorama City	13652 Cantara Street		Panorama City	CA	91402
Kaiser Permanente – San Diego Medical Center	4647 Zion Avenue		San Diego	CA	92120
Kaiser Permanente Medical Center	2350 Geary Boulevard	1st Floor – CV Surgery	San Francisco	CA	94115
Kaiser Permanente Medical Center – Health Sciences Library	9400 E. Rosencrans Avenue		Bellflower	CA	90706
Kaiser Permanente Medical Center – Santa Clara	700 Lawrence Expressway	Department 212	Santa Clara	CA	95051
Kaiser Sunnyside Medical Center	10180 SE Sunnyside Road		Clackamas	OR	97015
Kansas Medical Center	1124 West 21st Street		Andover	KS	67002
Kansas University Hospital Authority	3901 Rainbow Boulevard		Kansas City	KS	66160
Kapi'olani Medical Center Pali Momi	98-1079 Moanalua Road		Aiea	HI	96701
Katherine Shaw Bethea Hospital	403 E. First Street		Dixon	IL	61021
Kaweah Delta Hospital District	Kaweah Delta Hospital District	400 W. Mineral King Avenue	Visalia	CA	93291
Kendall Regional Medical Center	5631 Glencrest Boulevard		Tampa	FL	33625-1008
Kettering Medical Center	3535 Southern Boulevard		Kettering	OH	45429
Kingman Regional Medical Center	3269 Stockton Hill Road		Kingman	AZ	86401
Kings Daughters Medical Center	2201 Lexington Avenue		Ashland	KY	41101
Kingwood Medical Center	22999 Highway 59 N		Kingwood	TX	77339
Kishwaukee Community Hospital	One Kish Hospital Drive		Dekalb	IL	60115
Kootenai Medical Center	2003 Kootenai Health Way		Coeur d' Alene	ID	83814
Lahey Clinic	41 Mall Road		Burlington	MA	01805
Lake Charles Memorial Hospital	1701 Oak Park Boulevard		Lake Charles	LA	70601
Lake City Medical Center	340 NW Commerce Boulevard		Lake City	FL	32055
Lake Cumberland Regional Hospital	305 Langdon Street		Somerset	KY	42503
Lake Pointe Medical Center	6800 Scenic Drive		Rowlett	TX	75088
Lake Regional Health System	54 Hospital Drive		Osage Beach	MO	65065
Lakeland Hospital	1234 Napier Avenue		Saint Joseph	MI	49085-2112
Lakeland Regional Medical Center	1324 Lakeland Hills Boulevard		Lakeland	FL	33804
Lakeview Regional Medical Center	95 East Fairway Drive		Covington	LA	70433-7500
Lakewood Hospital	14519 Detroit Avenue		Lakewood	OH	44107
Lakewood Ranch Medical Center	8330 Lakewood Ranch Boulevard		Bradenton	FL	34202
Lakewood Regional Medical Center	3700 East South Street		Lakewood	CA	90712
Lancaster General Hospital	555 N. Duke Street PO Box 3555		Lancaster	PA	17604-3555
Landmark Medical Center	115 Cass Avenue		Woonsocket	RI	02895
Lankenau Hospital	Suite 557 Lankenau MOB East	100 Lancaster Avenue	Wynnewood	PA	19096
La Porte Hospital	1007 Lincolnway		La Porte	IN	46352
Largo Medical Center	201 14th Street SW		Largo	FL	33770

Facility Name	Address 1	Address 2	City	State	Zip Code
Las Colinas Medical Center	6800 North MacArthur Boulevard		Irving	TX	75039
Las Palmas Medical Center	1801 N. Oregon Street		El Paso	TX	79902
Lawnwood Medical Center	1700 S. 23rd Street		Fort Pierce	FL	34986
Lawrence & Memorial Hospital	365 Montauk Avenue		New London	CT	06375
Lawrence General Hospital	1 General Street		Lawrence	MA	01842-0389
Lawrence Hospital	55 Palmer Avenue		Broxville	NY	10708-3491
Lee Memorial Health System-Cape Coral Hospital	9981 S. Healthpark Drive		Fort Myers	FL	33908
Lee Memorial Health System-Health Park Med Center	9981 S. Healthpark Drive		Fort Myers	FL	33908
Lee's Summit Medical Center	2100 SE Blue Parkway		Lee's Summit	MO	64063
Lehigh Regional Medical Center	1500 Lee Boulevard		Lehigh Acres	FL	33963
Lehigh Valley Hospital	1200 S. Cedar Crest Boulevard	Jaindl Pavilion 1st Floor	Allentown	PA	18103
Lehigh Valley Hospital – Muhlenberg	2545 Schoenersville Road	Invasive Cardiology 3rd Floor	Bethlehem	PA	18017-7330
Lenox Hill Heart and Vascular Institute of New York	100 East 77th Street		New York	NY	10021
Lewis Gale Medical Center	1900 Electric Road		Salem	VA	24153
Liberty Hospital	2525 Glenn Hendren Drive		Liberty	MO	64068
Licking Memorial Hospital	1320 W. Main Street		Newark	OH	43055
Little Company of Mary Hospital	4101 Torrance Boulevard		Torrance	CA	90503
Logan General Hospital, LLC	20 Hospital Drive		Logan	WV	25601
Loma Linda University Medical Center	11234 Anderson Street Room 2431		Loma Linda	CA	92354
Long Island Jewish Medical Center	270-05 76th Avenue		New Hyde Park	NY	11040
Longmont United Hospital	1950 Mountain View Avenue		Longmont	CO	80501
Longview Regional Medical Center	PO Box 14000		Longview	TX	75607
Los Alamitos Medical Center	3751 Katella Avenue		Los Alamitos	CA	90720
Los Robles Hospital & Medical Center	215 W. Janss Road		Thousand Oaks	CA	91360-1899
Louisiana Medical Center and Heart Hospital	64030 Louisiana Highway 434		Lacombe	LA	70445
Lovelace Medical Center	601 Martin Luther King Jr. Avenue NE		Albuquerque	NM	87102
Lowell General Hospital	295 Varnum Avenue		Lowell	MA	01854
Lower Bucks Hospital	501 Bath Road		Bristol	PA	19007
Lower Keys Medical Center	5900 College Road		Key West	FL	33040
Loyola University Medical Center	2160 S. First Avenue	Rm. 1318 Bldg. 104 Att: Mike	Maywood	IL	60153
Lubbock Heart Hospital	4810 N. Loop 289		Lubbock	LA	79416
Luther Hospital	1221 Whipple Street		Eau Claire	WI	54702-4105
Lutheran Hospital of Indiana	7950 W. Jefferson Boulevard		Fort Wayne	IN	46804
Lutheran Medical Center	150 55th Street		Brooklyn	NY	11220
MacNeal Hospital	3249 S. Oak Park Avenue		Berwyn	IL	60402
Magnolia Regional Health Center	611 Alcorn Drive		Corinth	MS	38834
Maimonides Medical Center Division of Cardiology	4802 10th Avenue		Brooklyn	NY	11219
Maine Medical Center	22 Bramhall Street		Portland	ME	04102
Mainland Medical Center	6801 Emmett F. Lowry Expressway		Texas City	TX	77591
Manatee Memorial Hospital	206 Second Street East		Bradenton	FL	34208
Marian Medical Center	1400 East Church Street		Santa Maria	CA	93454
Maricopa Integrated Health System	2601 E. Roosevelt Street		Phoenix	AZ	85008
Marin General Hospital	250 Bon Air Road		Greenbrae	CA	94904
Marion General Hospital	441 N. Wabash Avenue		Marion	IN	46952
Marion General Hospital	1000 McKinley Park Drive		Marion	OH	43302-6397
Marshall Medical Center	2505 US Highway 431		Boaz	AL	35957
Marshall Medical Center	1100 Marshall Way		Placerville	CA	95667
Marshall University School of Medicine	420 West Magnetic Street		Huntington	WV	25701
Martha Jefferson Hospital	459 Locust Avenue		Charlottesville	VA	22902

Facility Name	Address 1	Address 2	City	State	Zip Code
Martin Memorial Medical Center	PO Box 9010		Stuart	FL	34995
Mary Black Hospital	1700 Skylyn Drive		Spatanburg	SC	29307
Mary Greeley Medical Center	1111 Duff Avenue		Ames	IA	50010
Mary Hitchcock Memorial Hospital	One Medical Center Drive		Lebanon	NH	03756
Mary Immaculate Hospital	2 Bernadine Drive		Newport News	VA	23602-4499
Mary Rutan Hospital	205 Palmer Avenue		Bellefontaine	OH	43311
Mary Washington Hospital	1001 Sam Perry Boulevard		Fredericksburg	VA	22401
Massachusetts General Hospital	55 Fruit Street		Boston	MA	02114
Mat-Su Regional Medical Center	2500 S. Woodworth Loop		Palmer	AK	99645
Maui Memorial Medical Center	221 Mahalani Street		Wailuku	HI	96793
Maury Regional Hospital	1224 Trotwood Avenue		Columbia	TN	38401
Mayo Clinic	4500 San Pablo Road		Jacksonville	FL	32216
Mayo Clinic Arizona	5777 E. Mayo Boulevard		Phoenix	AZ	85054
Mayo Clinic – St. Mary's Hospital	1216 2nd Street SW		Rochester	MN	55902
McAllen Medical Center	301 W. Expressway 83		McAllen	TX	78503
MCG Health Inc.	1120 15th Street BBR-8521		Augusta	GA	30912
McKay-Dee Hospital Center	4401 Harrison Boulevard		Ogden	UT	84405
McKee Medical Center	2000 Boise Avenue		Loveland	CO	80538
Mclaren Regional Medical Center	401 S. Ballenger Highway		Flint	MI	48532
McLeod Regional Medical Center	555 E. Chaves Street		Florence	SC	29501
Mease Countryside Hospital	300 Pinellas Street		Clearwater	FL	33756
Mease Dunedin Hospital	300 Pinellas Street	MS 73	Clearwater	FL	33756
Med Central Mansfield	335 Glessner Avenue		Mansfield	OH	44903
Medcenter One	300 N. 7th Street		Bismarck	ND	58501
Medical Center at Bowling Green	250 Park Street		Bowling Green	KY	42101
Medical Center Hospital	500 W. 4th Street		Odessa	TX	79760
Medical Center of Arlington	3301 Matlock Road		Arlington	TX	76015
Medical Center of Aurora	1501 S. Potomac Street		Aurora	CO	80012
Medical Center of Central Georgia	777 Hemlock Street		Macon	GA	31208
Medical Center of McKinney	4500 Medical Center Drive		McKinney	TX	75069
Medical Center of Plano	3901 W. 15th Street		Plano	TX	75075-7738
Medical Center of South Arkansas, L.L.C.	700 W. Grove		El Dorado	AR	71730
Medical Center of Southeastern Oklahoma	1800 University Boulevard		Durant	OK	74701
Medical Center of the Rockies	2500 Rocky Mountain Avenue		Loveland	CO	80538
Medical City Dallas Hospital	7777 Forest Lane		Dallas	TX	75230
Medical University of South Carolina	25 Countenay Drive		Charleston	SC	29425-2110
Melbourne Same Day Surgery	1035 S. Apollo Boulevard		Melbourne	FL	32901
Memorial Health System	1400 E. Boulder Street		Colorado Springs	CO	80909-5599
Memorial Health University Medical Center	Cardiac Cath Lab Memorial Health University Medical Center	4700 Waters Avenue	Savannah	GA	31404
Memorial Hermann Hospital	6411 Fanin Street		Houston	TX	77030
Memorial Hermann HVI South West	7787 Southwest Freeway		Houston	TX	77074
Memorial Hermann Memorial City Hospital	921 Gessner Road		Houston	TX	77024
Memorial Hermann Northeast	18951 Memorial North		Humble	TX	77338
Memorial Hermann Northwest Hospital	9401 SW Freeway		Houston	TX	77074
Memorial Hermann Southeast Hospital	11800 Astoria Boulevard		Houston	TX	77089-6049
Memorial Hermann The Woodlands Hospital	9250 Pinecroft Drive		Spring	TX	77380
Memorial Hospital	800 West 9th Street		Jasper	IN	47546
Memorial Hospital	325 South Belmont Street		York	PA	17405
Memorial Hospital	2525 Desales Avenue		Chattanooga	TN	37404-1102
Memorial Hospital at Gulfport	4500 13th Street	PO Box 1810	Gulfport	MS	39502
Memorial Hospital Carbondale	405 W. Jackson Street		Carbondale	IL	65902

Facility Name	Address 1	Address 2	City	State	Zip Code
Memorial Hospital of Martinsville	320 Hospital Drive		Martinsville	VA	24112
Memorial Hospital of South Bend	615 N. Michigan Street		South Bend	IN	46601-1033
Memorial Hospital West/South Broward Hospital District	703 North Flamingo Road		Pembroke Pines	FL	33028
Memorial Hospital – Jacksonville	3625 University Boulevard South		Jacksonville	FL	32215
Memorial Medical Center	701 N. First Street		Springfield	IL	62781
Memorial Medical Center	2450 S. Telshor Boulevard		Las Cruces	NM	88011
Memorial Medical Center	1086 Franklin Street		Johnstown	PA	15905-4398
Memorial Medical Center Modesto	1700 Coffee Road		Modesto	CA	95355
Memorial Regional Hospital/South Broward Hospital	3501 Johnson Street		Hollywood	FL	33021
Menifee Valley Medical Center	28400 McCall Boulevard		SunCity	CA	92585
Menorah Medical Center	5721 West 119th Street		Overland Park	KS	66209
Mercy Fitzgerald Hospital	1500 Lansdowne Avenue		Darby	PA	19023
Mercy General Hospital – Sacramento	3939 J Street		Sacremento	Ca	95819
Mercy Gilbert Medical Center	3555 S. Val Vista Drive		Gilbert	AZ	85296
Mercy Health System of Northwestern Arkansas	2710 Rife Medical Lane		Rogers	AR	72758
Mercy Hospital	2925 Chicago Avenue		Minneapolis	MN	55407
Mercy Hospital & Medical Center	2525 South Michigan Avenue		Chicago	IL	60616-2477
Mercy Hospital Anderson	7500 State Road		Cincinnati	OH	45255
Mercy Hospital Attn.: Accounts Payable	3663 South Miami Avenue		Miami	FL	33133
Mercy Hospital of Buffalo	515 Abbott Road	Marion Building Suite 306	Buffalo	NY	14220
Mercy Hospital Attn: A/P	271 Carew Street PO Box 9012		Springfield	MA	01102
Mercy Iowa City	500 East Market Street		Iowa City	IA	52245
Mercy Medical Center	2700 Steward Parkway		Roseburg	OR	97470
Mercy Medical Center	801 5th Street		Sioux City	IA	51101
Mercy Medical Center	1111 6th Avenue		Des Moines	IA	51101
Mercy Medical Center	1320 Mercy Drive	Cardiology Management and Support 3C	Canton	OH	44708
Mercy Medical Center	301 St. Paul Place		Baltimore	MD	21202
Mercy Medical Center	2900 W. 9th Avenue	Suite 107	Oshkosh	WI	54904
Mercy Medical Center	701 10th Street SE		Cedar Rapids	IA	52403
Mercy Medical Center	1000 North Village Avenue		Rockville Centre	NY	11571
Mercy Medical Center Redding	2175 Rosaline Avenue	PO Box 496009	Redding	CA	96049-6009
Mercy Medical Center St. Mary's	900 E. Oak Hill Avenue		Knoxville	TN	37917
Mercy Medical Center West	900 E. Oak Hill Avenue		Knoxville	TN	37917
Mercy Medical Center – North Iowa	1000 4th Street SW		Mason City	IA	50401
Mercy Memorial Health Center Sisters of Mercy	1011 14th Avenue NW		Ardmore	OK	73401
Mercy Regional Health Center	1823 College Avenue		Manhattan	KS	67218
Mercy Regional Medical Center	1010 Three Springs Boulevard		Durango	CO	81301
Mercy Regional Medical Center	800 East Main Street		Ville Platte	LA	70586
Mercy San Juan Hospital	3941 J Street		Sacremento	CA	95819
Mercy St. Vincent Medical Center	2222 Cherry Street	MOB #2 Suite 1250	Toledo	OH	43608
Meriter Hospital	202 South Park Street	10 Tower – Heart Center	Madison	WI	53715
Methodist Charlton Medical Center (Methodist Health System)	MHS Sam & Anne Kesner Heart Center	1441 N. Beckley Avenue	Dallas	TX	75203
Methodist Dallas Medical Center	MHS Sam & Anne Kesner Heart Center	122 West Colorado Boulevard	Dallas	TX	75203
Methodist Hospital	7700 Floyd Curl Drive		San Antonio	TX	78229
Methodist Hospital	6500 Excelsior Boulevard. 2nd Floor HVC		St. Louis Park	MN	55426
Methodist Medical Center of Illinois	221 NE Glen Oak Avenue		Peoria	IL	61636
Methodist Medical Center of Oak Ridge	990 Oak Ridge Turnpike		Oak Ridge	TN	37830
Methodist Speciality and Transplant Hospital	7700 Floyd Curl Drive		San Antonio	TX	78229
Methodist Stone Oak Hospital	1139 E. Sonterra Boulevard		San Antonio	TX	78258

Facility Name	Address 1	Address 2	City	State	Zip Code
Methodist Sugar Land Hospital	16655 Southwest Freeway		Sugar Land	TX	77479
Methodist Willowbrook Hospital	18220 Tomball Parkway		Houston	TX	77070
Metro Health Hospital	5900 Byron Center Road		Wyoming	MI	49519
MetroHealth Medical Center	2500 MetroHealth Drive		Cleveland	OH	44109
Metroplex Hospital	2201 S. Clear Creek Road		Killeen	TN	76549
MetroSouth Medical Center	12935 Gregory Street		Blue Island	IL	60406-2470
Metropolitan Methodist Hospital	1310 McCullough Avenue		San Antonio	TX	78212
MetroWest Medical Center	115 Lincoln Street	Cardiac Cath Lab	Framingham	MA	01702-6327
Miami Valley Hospital	One Wyoming Street		Dayton	OH	45409
Michael Reese Hospital	2929 S. Ellis Avenue		Chicago	IL	60616
Middle Tennessee Medical Center	4220 Harding Road		Nashville	TN	37205
Midland Memorial Hospital	2200 W. Illinois Avenue c/o Heart Institute		Midland	TX	79701
MidMichigan Medical Center-Midland	4005 Orchard Drive		Midland	MI	48670
Milford Regional Medical Center	14 Prospect Street		Milford	MA	01568
Mills-Peninsula Hospital	1783 Elcamino Real		Burlingame	CA	94010
Miriam Hospital	164 Summit Avenue		Providence	RI	02906
Mission Hospital Regional Medical Center	27700 Medical Center Road		Mission Viejo	CA	92691-6426
Mission Hospitals, Inc.	509 Biltmore Avenue		Asheville	NC	28801-4690
Missouri Baptist Medical Center	3015 N. Ballas Road	3105 North Ballas Road	Saint Louis	MO	63131-2374
Mobile Infirmary Medical Center	5 Mobile Infirmary Circle		Mobile	AL	36607
Monongalia Genera; Hospital	1200 JD Anderson Drive		Morgantown	WV	26505
Monroe Hospital	4011 South Medical Park Boulevard		Bloomington	IN	47403
Montefiore Medical Center	111 E. 210th Street		Bronx	NY	10467
Montgomery General Hospital	18101 Prince Philip Drive		Olney	MD	20832
Morristown Memorial Hospital	100 Madison Avenue		Morristown	NJ	07962
Morton Plant Hospital	300 Pinellas Street	MS 73	Clearwater	FL	33756
Morton Plant North Bay Hospital	300 Pinellas Street	MS 73	Clearwater	FL	33756
Moses Cone Health System	1200 N. Elm Street		Greensboro	NC	27401
Mother Frances Hospital	800 E. Dawson Street		Tyler	TX	75701
Mount Auburn Hospital	330 Mount Auburn Street	South 2 – Administration	Cambridge	MA	02138
Mount Clemens Regional Medical Center	1000 Harrington Street		Mount Clemens	MI	48043-2992
Mount Sinai Medical Center	4300 Alton Road		Miami Beach	FL	33140
Mountain View Regional Center	4311 E. Lohman Avenue		Las Cruces	NM	88011
Mountain Vista Medical Center	1301 S. Crismon Road		Mesa	AZ	85209
Mountainview Hospital	3100 N. Tenaya Way		Las Vegas	NV	89128
Munroe Regional Medical Center	1500 SW 1st Avenue PO Box 6000		Ocala	FL	34478
Munson Medical Center	1105 Sixth Street		Traverse City	MI	49684-2386
Muskogee Regional Medical Center	300 Rockefeller Drive		Muskogee	OK	74401
Nacogdoches Medical Center	4920 NE Stallings Drive		Nacogdoches	TX	75965
Naples Community Hospital	350 7th Street South		Naples	FL	34102
Nashoba Valley Medical Center	200 Groton Road		Ayer	MA	01432
NEA Baptist Memorial Hospital	3024 Stadium Boulevard		Jonesboro	AR	72401
Nebraska Heart Hospital	7500 South 91st Street		Lincoln	NE	68526
Nebraska Methodist Hospital	8303 Dodge Street		Omaha	NE	68114
New Hanover Regional Medical Center	2131 S. 17th Street		Wilmington	NC	28402
New York Community Hospital	2525 Kings Highway		Brooklyn	NY	11229
New York Hospital Medical Center of Queens Health Education Library	5645 Main Street	Floor 1	Flushing	NY	11355
New York Methodist Hospital	506 6th Street Brooklyn		New York City	NY	11215
New York Presbyterian Hospital	622West 168th Street	PH-2	New York City	NY	10032

Facility Name	Address 1	Address 2	City	State	Zip Code
Newark Beth Israel Medical Center	201 Lyons Avenue at Osborne Terrace		Newark	NJ	07112
NIX Healthcare System	414 Navarro Street		San Antonio	TX	78205
North Austin Medical Center	5103 Hereford Way		Austin	TX	78727
North Bay Medical Center	1200 B. Gale Wilson Boulevard		Fairfield	CA	94533
North Broward medical Center	201 E Sampl Road		Pompano Beach	FL	33064
North Carolina Baptist Hospital	Medical Center Boulevard		Winston-Salem	NC	27157
North Central Baptist Hospital	730 North Main Avenue	Suite 424	San Antonio	TX	78205
North Colorado Medical Center	1801 16th Street		Greeley	CO	80631
North Cypress Medical Center	21214 Northwest Freeway		Cypress	TX	77429
North Florida Regional Medical Center	6500 Newberry Road		Gainesville	FL	32605
North Hills Hospital	4401 Booth Calloway Road		North Richland Hills	TX	76180
North Kansas City Hospital	2800 Clay Edward Drive		North Kansas City	MO	64116
North Mississippi Medical Center	830 S. Gloster Street		Tupelo	MS	38801
North Oaks Medical Center	15790 Paul Vega MD Drive		Hammond	LA	70403
North Shore Medical Center	1100 NW 95th Street		Miami	FL	33150
North Shore Medical Center FMC Campus	5000 W. Oakland Park Boulevard		Ft. Lauderdale	FL	33313
North Shore Medical Center – Salem Hospital	81 Highland Avenue	Davenport 5	Salem	MA	01970
North Shore University Hospital	300 Community Drive		Manhasset	NY	11030
North Suburban Medical Center	9191 Grant Street		Denver	CO	80229
North Vista Hospital	1409 E. Lake Mead Boulevard		North Las Vegas	NV	89030
Northeast Alabama Regional Medical Center	400 East 10th Street		Anniston	AL	36202
Northeast Baptist Hospital	730 N. Main Avenue	Suite 424	San Antonio	TX	78205
Northeast Georgia Medical Center	743 Spring Street		Gainesville	GA	30501
NorthEast Medical Center	920 Church Street North		Concord	NC	28025
Northeast Methodist Hospital	12412 Judson Road		San Antonio	TX	78233
Northeast Regional Medical Center	315 S. Osteopathy		Kirksville	MO	63501
Northern Illinois Medical Center	4201 Medical Center Drive		McHenry	IL	60050
Northern Michigan Regional Hospital	416 Connable Avenue		Petoskey	MI	49770
Northridge Hospital Medical Center	18300 Roscoe Avenue		Northridge	CA	91325
Northside Hospital	6000 49th Street, N		Pinellas Park	FL	33709
Northside Hospital-Atlanta	1000 Johnson Ferry Road		Atlanta	GA	30342
Northside Hospital-Cherokee	1000 Johnson Ferry Road		Atlanta	GA	30342
Northside Hospital – Forsyth	1000 Johnson Ferry Road			GA	30041
Northwest Community Hospital	800 W. Central Road		Arlington Heights	IL	60005
Northwest Hospital	1550 North 115th Street		Seattle	WA	98113
Northwest Medical Center	2801 N. State Road 7		Margate	FL	33063
Northwestern Memorial Hospital	676 N. St. Clair Street	Suite 1700	Chicago	IL	60611
Norton Audubon	PO Box 35070		Louisville	KY	40232
Norton Hospital	PO Box 35070		Louisville	KY	40232
Norwalk Hospital	24 Stevens Street		Norwalk	CT	06856
Oak Hill Hospital	11375 Cortez Boulevard		Brooksville	FL	34613
Oakwood Hospital & Medical Center	18101 Oakwood Boulevard		Dearborn	MI	48124
Obici Hospital	600 Gresham Road		Norfolk	VA	23507
Ocala Regional Mecical Center	1431 SW First Avenue		Ocala	FL	34474
Ocean Springs Hospital	2012 Highway 90	Ste. 70	Gautier	MS	39553
Ochsner Baptist Medical Center Ochsner Health System	2700 Napolean Avenue		New Orleans	LA	70115
Ochsner Medical Center – Kenner (Kenner Regional Medical Center)	180 West Esplanade Avenue		Kenner	LA	70065
Ochsner Medical Foundation	1516 Jefferson Highway		Jefferson	LA	70003
Ochsner North Shore Covington	1000 Ochsner Boulevard		Covington	LA	70433
Oconee Regional Medical Center	812 N. Cobb Street		Milledgeville	GA	31061
O'Connor Hospital	2105 Forest Avenue		San Jose	CA	95128
Ogden Regional Medical Center	5475 South 500 East		Ogden	UT	84403

Facility Name	Address 1	Address 2	City	State	Zip Code
Ohio Valley Medical Center	2000 Eoff Street		Wheeling	WV	26003
Oklahoma State University Medical Center	744 W. 9th Street	Mail Drop-H440	Tulsa	OK	74127
Olathe Medical Center	20333 W. 151st Street		Olathe	KS	66061-7211
Oregon Health & Science University	3181 SW Sam Jackson Road	UHS 32	Portland	OR	97239
Orlando Regional Medical Center	1414 Kuhl Avenue	MP 196	Orlando	FL	32806
Osceola Regional Medical Center	700 W. Oak Street		Kissimmee	FL	34745
OSF Saint Anthony Medical Center	5666 East State Street		Rockford	IL	61108
OSF Saint Joseph Medical Center	2200 E. Washington Street		Bloomington	IL	61701
OSF Saint Francis Medical Center	530 N.E. Glen Oak Avenue		Peoria	IL	61637
OU Medical Center	700 NE 13th Street		Oklahoma City	OK	73104
Our Lady of Bellefonte Hospital	1000 St. Christopher Drive		Ashland	KY	41101
Our Lady of Lourdes Medical Center	1600 Haddon Avenue		Camden	NJ	08103
Our Lady of Lourdes Regional Medical Center	611 Saint Landry Street PO Box 4027		Lafayette	LA	70506
Our Lady of The Lake Regional	5000 Hennessy Boulevard		Baton Rouge	LA	70808-4350
Our Lady of the Resurrection Medical Center	5645 W. Addison Street		Chicago	IL	60634
Overlake Hospital Medical Center	1035 116th Avenue NE		Bellevue	WA	98004
Overland Park Regional Medical Center/ Health Midwest	10500 Quivira Road		Overland Park	KS	66215
Ozarks Medical Center	1100 Kentucky Avenue	PO Box 1100	West Plains	MO	65775
P and S Surgical Hospital	312 Grammont Street		Monroe	LA	71201
Palm Beach Gardens Medical Center	3360 Burns Road		Palm Beach Gardens	FL	33410
Palmetto General Hospital	2001 West 68th Street		Hialeah	FL	33016
Palmetto Health Richland	6 Richland Medical Park Drive	Suite 4525	Columbia	SC	29203
Palomar Medical Center	555 East Valley Parkway		Escondido	CA	92025
Palos Community Hospital	12251 S. 80th Avenue	Cardiovascular Services	Palos Heights	IL	60463-0930
Paoli Hospital	557 Lankenau MOB East	100 Lancaster Avenue	Wynnewood	PA	19096
Paradise Valley Hospital	3929 E. Bell Road		Phoenix	AZ	85032
Paradise Valley Hospital	2400 E. Fourth Street		National City	CA	91950
Paris Regional Medical Center	865 DeShong Drive		Powderly	TX	75432
Park Plaza Hospital	1313 Hermann Drive		Houston	TX	77004
Parkridge Medical Center	2333 McCallie Avenue		Chattanooga	TN	37404
Parkview Hospital	2200 Randallia Drive		Fort Wayne	IN	46805
Parkview Medical Center	400 W. 16th Street		Pueblo	CO	81003
Parkway Regional Medical Center	160 NW 170th Street		North Miami	FL	33169
Parkwest Medical Center	9352 Parkwest Boulevard		Knoxville	TN	37923
Parma Community General Hospital	7007 Powers Boulevard		Parma	OH	44129
Parrish Medical Center	951 N. Washington Avenue		Titusville	FL	32796
PBI Regional Medical Center	350 Boulevard		Passaic	NJ	07055
Peace Health St.Joseph Medical Center	2901 Squalicum Parway		Bellingham	WA	98225
Peninsula Regional Medical Center	100 East Carroll Street		Salisbury	MD	21801
Penn Presbyterian Medical Center	39th & Market Streets		Philadelphia	PA	19104
Penn State Hershey Medical Center	PO Box 850 MC H047		Hershey	PA	17033-0850
Pennsylvania Hospital	800 Spruce Street		Philadelphia	PA	19107-6192
Penrose – St. Francis Health Services	2222 North Nevada, #3000		Colorado Springs	CO	80907
Phelps County Regional Medical Center	1000 W. 10th Street		Rolla	MO	65401
Phoebe Putney Memorial Hospital	417 Third Avenue		Albany	GA	31701
Phoenix Baptist Hospital	2000 W. Bethany Home Road		Phoenix	AZ	85015
Phoenixville Hospital	140 Nutt Road		Phoenixville	PA	19460-3906
Piedmont Hospital	95 Collier Road Suite 2075		Atlanta	GA	30309
Piedmont Medical Center	222 S. Herlong Avenue		Rock Hill	SC	29732
Pikeville Medical Center	911 Bypass Road		Pikeville	KY	41501

Facility Name	Address 1	Address 2	City	State	Zip Code
Pinnacle Health Invasive Cardiology	111 South Front Street		Harrisburg	PA	17101-2099
Pitt County Memorial Hospital	2100 Statonsburg Road	PCMH Heart Center	Greenville	NC	27835
Plantation General Hospital	401 NW 42nd Avenue		Plantation	FL	33317
Plaza Medical Center of Fort Worth	7921 Daystar Drive		Fort Worth	TX	76123
Pocono Medical Center	206 East Brown Street		East Stroudsburg	PA	18301
Pomona Valley Hospital Med Center	1798 N. Garey Avenue		Pomona	CA	91768
Port Huron Hospital	1221 Pine Grove Avenue		Port Huron	MI	48060
Porter Adventist Hospital	2525 S. Downing Street		Denver	CO	80210-5817
Porter Valparaiso Hospital Campus	814 Laporte Avenue		Valparaiso	IN	46383
Portneuf Medical Center	651 Memorial Drive		Pocatello	ID	83201
Portsmouth Regional Hospital	333 Borthwick Avenue		Portsmouth	NH	03801
Prairie Lakes Healthcare	401 9th Avenue		Watertown	SD	57201
Presbyterian Hospital	200 Hawthorne Lane		Charlotte	NC	28233
Presbyterian Hospital (Matthews)	1500 Matthews Township Parkway		Matthews	NC	28105
Presbyterian Hospital of Dallas	Presbyterian Hospital	8200 Walnut Hill Lane	Dallas	TX	75231
Presbyterian/ St.Luke's Medical Center	1719 E. 19th Avenue		Denver	CO	80218-1235
Prince George's Hospital Center	3001 Hospital Drive		Cheverly	MD	20785
Princeton Baptist Medical Center	701 Princeton Avenue, SW		Birmingham	AL	35211-1399
Proctor Hospital	5409 N. Knoxville Avenue		Peoria	IL	61614
Protestant Memorial Medical Center	4500 Memorial Drive		Belleville	IL	62226
Provena Covenant Medical Center	1400 West Park Street		Urbana	IL	61801-9901
Provena Saint Joseph Medical Center	333 North Madison Street		Joliet	IL	60435-6595
Provena Saint Marys Hospital	500 West Court Street		Kankakee	IL	60901
Provena St. Joseph Hospital	77 N. Airlite Street		Elgin	IL	60123
Provena United Samaritans Medical Center	812 North Logan Avenue		Danville	IL	61832
Providence Alaska Medical Center	3200 Providence Drive		Anchorage	AK	99508-4662
Providence Healthcare Network	6901 Medical Parkway		Waco	TX	76712
Providence Holy Cross Medical Center	501 South Buena Vista Street		Burbank	CA	91505
Providence Hospital	2435 Forest Drive		Columbia	SC	29204
Providence Medical Center	8929 Parallel Parkway		Kansas City	KS	66112-1689
Providence Memorial Hospital	2001 North Oregon Street		El Paso	TX	79902
Providence Park Hosptial	16001 W. Nine Mile Road		Novi	MI	48374
Providence Portland Medical Center	9205 SW Barnes Road	9205 South West. Barnes Road	Portland	OR	97225
Providence Regional Medical Center Everett	1321 Coby Avenue		Everett	WA	98206-1147
Providence Saint Joseph Medical Center	501 South Buena Vista Street		Burbank	CA	91505
Providence Saint Vincent Medical Center	Regional Heart Data Services	9205 South West Barnes Road #33	Portland	OR	97225
Providence St. Peter Hospital	413 N. Lilly Road		Olympia	WA	98506
Providence Tarzana Medical Center	18321 Clark Street		Tarzana	CA	91356-3501
Queen of the Valley Medical Center	1000 Trancas Street		Napa	CA	94558
Queens Medical Center	1301 Punchbowl Street		Honolulu	HI	96813
Quincy Hospital	114 Whitwell Street		Quincy	MA	02169-1870
Raleigh General Hospital	1710 Harper Road		Beckley	WV	25801
Rapides Regional Medical Center	211 4th Street Box 30101		Alexandria	LA	71301
Raulerson Hospital (HCA)	1796 Highway 441 North		Okeechobee	LA	34972
Redmond Regional Medical Center	501 Redmond Road		Rome	GA	30165
Regents of the University of Michigan	2101 Commonwealth Boulevard		Ann Arbor	MI	48105
Regional Hospital of Jackson	367 Hospital Boulevard		Jackson	TN	38305
Regional Medical Center	225 N. Jackson Avenue		San Jose	CA	95116
Regional Medical Center	3000 St. Matthews Road		Orangeburg	SC	29118
Regional Medical Center	900 Hospital Drive		Madisonville	KY	42431-1644

Facility Name	Address 1	Address 2	City	State	Zip Code
Regional Medical Center Bayonet Point	14000 Fivay Road		Hudson	FL	34667
Regional Medical Center Of Acadiana	2810 Ambassador Caffrey Pkwy.		Lafayette	LA	70506
Regions Hospital	640 Jackson Street	Mail Stop 11102-M	St. Paul	MN	55101
Reid Hospital & Healthcare Services	1100 Reid Parkway		Richmond	IN	47374
Renown Regional Medical Center	1155 Mill Street	R 11	Reno	NV	89502
Research Medical Center	2316 East Meyer Boulevard	Cardiology Services	Kansas City	MO	64132
Reston Hospital Center	1850 Town Center Parkway		Reston	VA	20190
Resurrection Medical Center	7435 W. Talcott Avenue		Chicago	IL	60631
Rex Hospital	4420 Lake Boone Trail		Raleigh	NC	27607
Rhode Island Hospital	593 Eddy Street		Providence	RI	02903
Richmond University Medical Center	355 Bard Avenue		Staten Island	NY	10310
Riddle Memorial Hospital	1068 W. Baltimore Pike		Media	PA	19063-5177
Rideout Memorial Hospital	726 Fourth Street		Marysville	CA	95901
Ridgecrest Regional Hospital	1081 N. China Lake Boulevard		Ridgecrest	CA	93555
Rio Grande Regional Hospital	101 E. Ridge Road		McAllen	TX	78503
River Oaks Hospital	1030 River Oaks Drive		Flowood	MS	39232
River Park Hospital	1559 Spata Road		McMinnville	TN	37110
River Region Medical Center	2100 Highway 61 North		Vicksburg	MS	39183
Riverside Community Hospital	4445 Magnolia Avenue		Riverside	CA	92501
Riverside Medical Center	350 N. Wall Street		Kankakee	IL	60901
Riverside Methodist Hospital	3535 Olentangy River Road		Columbus	OH	43214
Riverside Regional Medical Center	500 J Clyde Morris Boulevard		Newport News	VA	23601
Riverview Hospital	395 Westfield Road		Noblesville	IN	46060
Riverview Regional Medical Center	600 South Third Street	PO Box 268	Gadsden	AL	35901
Robert Packer Hospital	1 Guthrie Square		Gadsden	AL	18840
Rockford Memorial Hospital	2400 North Rockton Avenue		Rockford	IL	61103
Rogue Valley Medical Cent	2825 E. Barnett Road	Performance Improvement Dept.	Medford	OR	97504
Roper Hospital	316 Calhoun Street		Charleston	SC	29401
Rose Medical Center	4567 E. 9th Avenue		Denver	CO	80220-3941
Roswell Regional Hospital	117 East 19th Street		Roswell	NM	88201
Round Rock Medical Center	2400 Round Rock Medical Center		Round Rock	TX	78681
Rowan Regional Medical Center	612 Mocksville Avenue		Salisbury	NC	28144
Rush Hospital	1314 19th Avenue		Meridian	MS	39301
Rush University Medical Center	1653 West Congress Parkway		Chicago	IL	60612
Rush-Copley Medical Center	2000 Ogden Avenue		Aurora	IL	60504
Russell Medical Center	3316 Highway 280 PO Box 939		Alexander City	AL	35011
Rutland Regional Medical Center	160 Allen Street		Rutland	VT	05701
Sacred Heart Hospital of Pensacola	5151 North 9th Avenue		Pensacola	FL	32504-8721
Sacred Heart Hospital Attn: A/P	900 W. Clairemont Avenue		Eau Claire	WI	54701
Sacred Heart Medical Center	770 E. 11th Avenue		Eugene	OR	97401
Sacred Heart Medical Center	101 W. Eighth Avenue		Spokane	WA	99204
Saddleback Memorial Medical Center	24451 Health Center Drive		Laguna Hills	CA	92653
Saint Anthony Medical Center	1201 S. Main Street		Crown Point	IN	46307
Saint Bernadine Medical Center	2101 N. Waterman Avenue		San Bernadino	CA	92404-4836
Saint Clare's Hospital	611 St. Joseph's Avenue		Marshfield	WI	54449
Saint Elizabeth Health Center	1044 Belmont Avenue		Youngstown	OH	44511
Saint Elizabeth Hospital	2700 W. 9th Avenue Suite 107		Oshkosh	WI	54904
Saint Elizabeth Healthcare-Edgewood	1 Medical Village Drive		Edgewood	KY	41017-3403
Saint Elizabeth Regional Medical Center	555 S. 70th Street		Lincoln	NE	68510-2462
Saint Elizabeth's Hospital	211 South 3rd Street		Belleville	IL	62220-1915
Saint Francis Hospital	2122 Manchester Expressway		Columbus	GA	31904

Facility Name	Address 1	Address 2	City	State	Zip Code
Saint Francis Hospital	5959 Park Avenue		Memphis	TN	38119
Saint Francis Hospital	6161 S. Yale Avenue		Tulsa	OK	74136
Saint Francis Hospital & Health Center	8111 S. Emerson Avenue		Indianapolis	IN	46237
Saint Francis Hospital & Medical Center	114 Woodland Street		Hartford	CT	06105
Saint Francis Hospital of Evanston	355 Ridge Avenue		Evanston	IL	60202
Saint John Hospital & Medical Center	22151 Moross Road	Professional Bldg #1, #126	Detroit	MI	48236-2148
Saint John Macomb-Oakland Hospital	11800 E. 12 Mile Road	Room # 2510	Warren	MI	48093
Saint Johns Mercy Medical Center	615 S. New Ballas Road		St. Louis	MO	63141
Saint Joseph – London	310 East 9th Street		London	KY	40741
Saint Joseph Hospital	350 West Thomas Road		Phoenix	AZ	85013
Saint Joseph Hospital	3001 W. Martin Luther King Boulevard.		Tampa	FL	33607
Saint Joseph Hospital	2900 N. Lake Shore Drive		Chicago	IL	60657
Saint Joseph Regional Health Center	2801 Franciscan Street		Bryan	TX	77802-2544
Saint Joseph's Hospital	1824 Murdoch Avenue		Parkersburg	WV	26102-0327
Saint Josephs Hospital / Marshfield Clinic	611 St. Joseph Avenue		Marshfield	WI	54449-1832
Saint Joseph's Hospital of Atlanta	5665 Peachtree Dunwoody Road		Atlanta	GA	30342
Saint Josephs Regional Medical Center – SB	801 East LaSalle Avenue		South Bend	IN	46617
Saint Louis University Hospital	3635 Vista at Grand		Saint Louis	MO	63110
Saint Luke's East – Lee's Summit	100 NE Saint Luke's Boulevard		Lee's Summit	MO	64086
Saint Luke's Hospital	4401 Wornall Road	(MAHI 5th Floor)	Kansas City	MO	64111
Saint Luke's Hospital	232 S. Woods Mill Road		Chesterfield	MO	63017-3417
Saint Luke's Regional Medical Center	190 E. Bannock Street		Boise	ID	83712-6241
Saint Mary Corwin Medical Center	1008 Minnequa Avenue		Pueblo	CO	81004-3798
Saint Mary's Hospital and Regional Medical Center	2635 N. 7th Street		Grand Junction	CO	81501-8209
Saint Mary's Medical Center	3700 Washington Avenue		Evansville	IN	47750
Saint Peter's Hospital	315 South Manning Boulevard		Albany	NY	12208
Saint Rita's Medical Center	730 West Market Street		Lima	OH	45801-4602
Saint Rose Dominican – Siena Campus	3001 St. Rose Parkway		Henderson	NV	89052
Saint Thomas Health Care Services	4220 Harding Road		Nashville	TN	37236
Saint Vincent Hospital	123 Summer Street	Suite 270	Worcester	MA	01608
Saint Vincent Medical Center/Health Center	2 St. Vincent Circle		Little Rock	AR	72205
Salem Hospital (Regional Health Services)	890 Oak Street SE		Salem	OR	97309
Salina Regional Health Center	400 S. Santa Fe Avenue		Salina	KS	67401
Salinas Valley Memorial Hospital	450 E. Romie Lane		Salinas	CA	93901-4098
San Antonio Community Hospital	999 San Bernardino Road		Upland	CA	91786
San Jacinto Methodist Hospital	4401 Garth Road		Baytown	TX	77521
San Joaquin Community Hospital	2615 Eye Street		Bakersfield	CA	93301
San Joaquin General Hospital	500 W. Hospital Road		French Camp	CA	95231
San Juan Regional Medical Center	801 W. Maple Street		Farmington	NM	87401
San Ramon Regional Medical Center	6001 Norris Canyon Road		San Ramon	CA	94583
Sanford USD Medical Center	900 East 54th Street		Sioux Falls	SD	57104
Santa Barbara Cottage Hospital	PO Box 689		Santa Barbara	CA	93102-0689
Sarasota Memorial Hospital	1700 S. Tamiami Trail		Sarasota	FL	34239
Satilla Heart Center	410 Darling Avenue		Waycross	GA	31501
Scott and White Hospital	2401 South 31st Street		Temple	TX	76508
Scottsdale Healthcare Osborn	7400 E. Osborn Road		Scottsdale	AZ	85260
Scottsdale Healthcare Shea	9003 E. Shea Boulevard – Administration		Scottsdale	AZ	85260
Scottsdale Healthcare Thompson Peak	7400 E. Osborn Road		Scottsdale	AZ	85251
Scripps Green Hospital – La Jolla	10666 North Torrey Pines Road		La Jolla	CA	92037
Scripps Memorial Hospital – La Jolla	9888 Genesee Avenue	Mailstop LJ101	La Jolla	CA	92037
Scripps Mercy Hospital – San Diego	4077 5th Avenue	MER 74	San Diego	CA	92103
Scripps Mercy Hospital – Chula Vista	435 H Street	CV-101	Chula Vista	CA	91910

Facility Name	Address 1	Address 2	City	State	Zip Code
Sebastian River Medical Center	13695 S. US Highway 1		Sebastian	FL	32958
Self Regional Healthcare	1325 Spring Street		Greenwood	SC	29646
Sentara Leigh Hospital	600 Gresham Road		Norfolk	VA	23507
Sentara Norfolk General Hospital	600 Gresham Road		Norfolk	VA	23507
Sentara Virginia Beach General Hospital	600 Gresham Road		Norfolk	VA	23507
Sentara Williamsburg Regional Medical Center	600 Gresham Road		Norfolk	VA	23188
Sequoia Hospital	Whipple & Alameda Avenues		Redwood City	CA	94062
Seton Medical Center Austin	1201 W. 38th Street		Austin	TX	78705
Seton Medical Center Williamson	201 Seton Parkway		Round Rock	TX	78665
Shady Grove Adventist Hospital	9901 Medical Center Drive		Rockville	MD	20850
Shands Jacksonville Medical Center	655 West 8th Street		Jacksonville	FL	32209
Shannon Medical Center	120 E. Harris Avenue		San Angelo	TX	76903
Sharon Regional Health System	740 E. State Street		Sharon	PA	16146
Sharp Chula Vista Medical Center	8695 Spectrum Center Court		San Diego	CA	92123
Sharp Grossmont	5555 Grossmont Center Drive		La Mesa	CA	91942
Sharp Memorial Hospital	7901 Frost Street		San Diego	CA	92123
Shasta Regional Medical Center	1100 Butte Street		Redding	CA	96001
Shawnee Mission Medical Center	9100 West 74th Street		Shawnee Mission	KS	66204-4004
Shelby Baptist Medical Center	1000 First Street North		Alabaster	AL	35007
Sherman Hospital	1425 N. Randall Road		Elgin	IL	60123
Sierra Medical Center	1625 Medical Center Drive		El Paso	TX	79902
Sierra Providence East Medical Center	1625 Medical Center Drive		El Paso	TX	79902
Silver Cross Hospital	1200 Maple Road		Joliet	IL	60432
Simi Valley Hospital & Health Care Services	2975 North Sycamore Drive		Simi Valley	CA	93065
Sinai – Grace Hospital	6071 W. Outer Drive		Detroit	MI	48235
Singing River Hospital	2809 Denny Avenue		Pascagoula	MS	39581
Skaggs Community Health Center	PO Box 650		Branson	MO	65615-0650
Skokie Hospital	9600 Gross Point Road	Cardiac Cath Lab	Skokie	IL	60076-1214
Sky Ridge Medical Center	10101 Ridgegate Parkway		Lone Tree	CO	80124
Skyline Medical Center/ HTI Memorial Hospital Corp.	3441 Dickerson Pike		Nashville	TN	37207
Skyridge Medical Center	2305 Chambliss Avenue		Cleveland	TN	37311
South Baldwin Regional Medical Center	1613 N. McKenzie Street		Foley	AL	36535
South Bay Hospital	4016 Sun City Center Boulevard		Sun City Center	FL	33570
South Central Regional Medical Center	PO Box 607		Laurel	MS	39440
South Crest Hospital	8801 S. 101st Avenue E		Tulsa	OK	74133
South Fulton Medical Center	1170 Cleveland Avenue		East Point	GA	30344
South GA Medical Center	PO Box 1727		Valdosta	GA	31603-1727
South Lake Hospital	1099 Citrus Tower Boulevard		Clermont	FL	34711
South Miami Hospital	6200 SW 73rd Street		Miami	FL	33143
South Nassau Communities Hospital	One Healthy Way		Oceanside	NY	11572
South Shore Hospital	55 Fogg Road`		South Weymouth	MA	02190-2432
South Texas Regional Medical Center	1905 Highway 97 East		Jourdanton	TX	78026
Southeast Alabama Medical Center	1108 Ross Clark Circle		Dothan	AL	36301
Southeast Baptist Hospital	730 North Main Avenue	Suite 424	San Antonio	TX	78205
Southeast Missouri Hospital	1701 Lacey Street		Cape Girardeau	MO	63701
Southeastern Regional Medical Center	300 West 27th Street		Lumberton	NC	28358
Southern Hills Hospital	9300 West Sunset Road		Las Vegas	NV	89148
Southern Hills Medical Center	391 Wallace Road		Nashville	TN	37211
Southern New Hampshire Medical Center	8 Prospect Street		Nashua	NH	03060
Southern Ohio Medical Center	1805 27th Street		Portsmouth	OH	45662
Southern Regional Medical Center	11 Upper Riverdale Road SW		Riverdale	GA	30274
Southside Hospital	301 East Main Street		Bayshore	NY	11706

Facility Name	Address 1	Address 2	City	State	Zip Code
SouthView Hospital	1997 Miamisburg-Centerville Road		Dayton	OH	45459
Southwest General Health Center	18697 Bagley Road		Middleburg Heights	OH	44130-3417
Southwest MS Regional Medical Center	303 Marion Avenue		McComb	MS	39648
Southwest Washington Medical Center	600 NE 92nd Avenue		Vancouver	WA	98664
Southwestern Medical Center	5602 SW Lee Boulevard		Lawton	OK	73505
Spalding Regional Medical Center	601 South 8th Street		Griffin	GA	30224
Sparks Regional Medical Center	1001 Towson Avenue		Fort Smith	AR	72917-7006
Spartanburg Regional Medical Center	101 East Wood Street	Cardiac Cath Lab / 3rd Floor Heart Center	Spartanburg	SC	29303
Spectrum Health	100 Michigan Street NE	MC 037, Rm 3825A	Grand Rapids	MI	49503-2560
Spotsylvania Regional Medical Health Center	4600 Spotsylvania County Parkway		Fredericksburg	VA	22408
Spring Valley Hospital	5400 S. Rainbow Boulevard		Las Vegas	NV	89118
Springhill Memorial Hospital	3719 Dauphin Street		Mobile	AL	36608
SSM St. Clare Health Center	1015 Corporate Square Drive	Suite 130	St. Louis	MO	63132
SSM St. Joseph Health Center	300 First Capitol Drive		St. Charles	MO	63301
St. Anthony Central Hospital	4231 W. 16th Avenue		Denver	CO	80204-1335
St. Anthony North Hospital	4231 W. 16th Avenue		Denver	CO	80204
St. James Hospital and Health Centers	3800 West 203rd Street Suite 207		Olympia Fields	IL	60461
St. Joseph Hospital	700 Broadway		Fort Wayne	IN	46802
St. Joseph Medical Center	1717 South J Street		Tacoma	WA	98405-4933
St. Josephs Hospital	45 W. 10th Street		St Paul	MN	55102
St. Joseph Hospital Health Center	301 Prospect Avenue		Syracuse	NY	13203
St. Luke's Cornwall Hospital	70 DuBois Street		Newburgh	NY	12550
St. Mary's Health Care Systems	1230 Baxter Street		Athens	GA	30606
St. Mary's Hospital	400 North Pleasant		Centralia	IL	62801
St. Mary's Regional Medical Center	305 S. 5th Street		Enid	OK	73701
St. Agnes Hospital	900 S. Caton Avenue		Baltimore	MD	21229
St. Agnes Hospital	430 E. Division Street		Fond du lac	WI	54935
St. Alexius Medical Center	1555 Barrington Road		Hoffman Estates	IL	60194-1018
St. Alphonsus Regional Medical Center	1055 N. Curtis Road		Boise	ID	83706
St. Anthony Hospital	1000 N. Lee Avenue		Oklahoma City	OK	73102
St. Anthony Memorial Health Centers	301 W. Homer Street	Cath Lab	Michigan City	IN	46360
St. Anthony's Health Care	1200 7th Avenue North	MS 2019	St. Petersburg	FL	33705
St. Anthony's Health Center	One Saint Anthony Way		Alton	Il	62002
St. Anthony's Medical Center	10010 Kennerly Road		St. Loius	MO	63128-2106
St. Barnabas Medical Center	94 Old Short Hills Road		Livingston	NJ	07039
St. Bernards Medical Center	225 E. Jackson Avenue		Jonesboro	AR	72401
St. Catherine Hospital East Chicago	1500 South Lake Park Avenue		Hobart	IN	46342
St. Catherine of Siena	50 Route 25A		Smithtown	NY	11787
St. Charles Hospital	200 Belle Terre Road		Port Jefferson	NY	11777
St. Charles Medical Center	2500 North East Neff Road		Bend	OR	97701-6015
St. Cloud Regional Medical Center	2906 17th Street		St. Cloud	FL	34769
St. David's Medical Center	919 East 32nd Street		Austin	TX	78765
St. David's South Austin Hospital	901 W. Ben White Boulevard		Austin	TX	78704
St. Dominic-Jackson Memorial Hospital	969 Lakeland Drive		Jackson	MS	39216
St. Elizabeth Boardman	8401 Market Street		Boardman	OH	44512
St. Elizabeth East	1701 S. Creasy Lane		Lafayette	IN	47905
St. Elizabeth Healthcare Florence	7380 Turfway Road		Florence	KY	41042
St. Elizabeth Hospital	2233 W. Division		Chicago	IL	60622
St. Elizabeth Medical Center	2209 Genesee Street		Utica	NY	13501
St. Elizabeths Medical Center	736 Cambridge Street		Brighton	MA	02135
St. Francis Bartlett (TENET)	2896 Kate Bond Road		Bartlett	TN	38133

Facility Name	Address 1	Address 2	City	State	Zip Code
St. Francis Health Center	1700 SW 7th Street		Topeka	KS	66605
St. Francis Hospital	One St. Francis Drive		Greenville	SC	29601
St. Francis Hospital	333 Laidley Street	PO Box 44 Culloden, WV 25510	Charleston	WV	25322
St. Francis Medical Center	2706 Anita Lane		Monroe	LA	71201
St. Francis Hospital	100 Port Washington Boulevard		Roslyn	NY	11576
St. Francis Medical Center	211 Saint Francis Drive		Cape Girardeau	MO	63703-5049
St. Francis Medical Center	601 Hamilton Avenue		Trenton	NJ	08629
St. John Medical Center	1923 S. Utica Avenue	Heart Institute Education/Research	Tulsa	OK	74104
St. John Medical Center	1615 Delaware Street		Longview	WA	98632
St. John Providence Hospital	16001 W. Nine Mile Road		Southfield	MI	48075
St. John Medical Center	29000 Center Ridge Road		Westlake	OH	44145
St. John's Hospital	800 E. Carpenter Street		Springfield	IL	62769
St. John's Hospital	1235 East Cherokee Street		Springfield	MO	65804
St. Johns Regional Medical Center	2727 McClelland Boulevard		Joplin	MO	64804
St. Johns Regional Medical Center	1600 N. Rose Avenue		Oxnard	CA	93030-3722
St. Joseph Hospital	2700 Dolbeer Street		Eureka	CA	95501
St. Joseph Hospital	1 Saint Joseph Drive		Lexington	KY	40504
St. Joseph Hospital	172 Kinsley Street		Nashua	NH	03060
St. Joseph Hospital	360 Broadway		Bangor	ME	04401
St. Joseph Medical Center	2200 E. Washington Street		Bloomington	IL	61701
St. Joseph Medical Center	12th & Walnut Streets		Reading	PA	19603
St. Joseph Medical Center	1401 St. Joseph Parkway		Houston	TX	77002
St. Joseph Medical Center	7601 Olser Drive		Towson	MD	21204
St. Joseph Mercy Hospital	5325 Elliot Drive		Ann Arbor	MI	48106
St. Joseph Regional Medical Center	801 E. Lasalle Avenue		South Bend	IN	46617
St. Joseph Regional Medical Center	703 Main Street		Paterson	NJ	07503
St. Joseph's Hospital	11705 Mercy Boulevard		Savannah	GA	31419
St. Joseph's Hospital	350 N. Wilmot Road		Tucson	AZ	85711
St. Joseph's Medical Center	127 S. Broadway		Yonkers	NY	10701
St. Josephs Medical Center of Stockton	1800 North California Street		Stockton	CA	95204
St. Luke's Baptist Hospital	730 North Main Avenue	Suite 409	San Antonio	TX	78205
St. Luke's The Woodlands Hospital	17200 St. Luke's Way		The Woodlands	TX	77384
St. Luke's Episcopal Hospital	3100 Main Street	MC5-313	Houston	TX	77030
St. Lukes Hospital	363 Highland Avenue		Falls River	MA	02720
St. Lukes Hospital	5901 Monclova Road		Maumee	OH	43537
St. Luke's Hospital	915 E. First Street		Duluth	MN	55805
St. Luke's Hospital & Health Network	801 Ostrum Street	St. Luke's Hospital & Health Network	Bethlehem	PA	18015
St. Luke's Hospital and Health Network (Allentown Campus)	801 Ostrum Street	St. Luke's Hospital & Health Network	Bethlehem	PA	18015
St. Luke's Lakeside Hospital	3100 Main Street 647D	MC 5-313	Houston	TX	77002
St. Luke's Medical Center	2900 West Oklahoma Avenue		Milwaukee	WI	53215-4330
St. Luke's Medical Center	1800 E. Van Buren Street		Phoenix	AZ	85006
St. Luke's South Hospital	Saint Luke's Hospital	4401 Wornal Road	Kansas City	MO	64111
St. Luke's Sugar Land Hospital	3100 Main Street Suite 647D		Houston	TX	77002
St. Luke's-Roosevelt Hospital Center	1111 Amsterdam Avenue		New York City	NY	10025
St. Mark's Hospital/ Northern Utah Healthcare Corporation	1200 East 3900 South		Salt Lake City	UT	84124
St. Mary Medical Center	1201 Langhorne Newton Road		Langhorne	PA	19047
St. Mary Medical Center	18300 Highway 18		Apple Valley	CA	92307
St. Mary Medical Center	1050 Linden Avenue		Long Beach	CA	90813-3321

Facility Name	Address 1	Address 2	City	State	Zip Code
St. Mary Medical Center	1500 South Lake Park Avenue		Hobart	ID	46342
St. Mary of Nazareth Hospital Center	2233 W. Division Street		Chicago	IL	60622
St. Mary's Health Center	6420 Clayton Road		St. Louis	MO	63117
St. Mary's Hospital	1726 Shawano Avenue		Green Bay	WI	54303-3282
St. Mary's Medical Center	450 Stanyan Street		San Francisco	CA	94117
St. Mary's Medical Center	901 45th Street		West Palm Beach	FL	33407
St. Mary's Medical Center	400 East Third Street		Duluth	MN	55805
St. Mary's of Michigan	800 S. Washington Avenue		Saginaw	MI	48601
St. Mary's Regional Medical Center	PO Box 291 Campus Avenue		Lewiston	ME	04243-0291
St. Michael's Medical Center	111 Central Avenue		Newark	NJ	07102
St. Nicholas Hospital	3100 Superior Avenue		Sheboygan	WI	53081
St. Patrick Hospital and Health Sciences Center	500 W. Broadway		Missoula	MT	59802
St. Rose Dominican – De Lima Campus	102 E. Lake Mead Boulevard		Henderson	NV	89015
St. Rose Hospital	27200 Calaroga Avenue		Hayward	CA	94539
St. Tammany Parish Hospital	1202 S. Tyler Street		Covington	LA	70433
St. Vincent Charity Hospital	2351 East 22nd Street		Cleveland	OH	44115
St. Vincent Healthcare	1233 North 30th Street		Billings	MT	59101
St. Vincent Hospital	2660 10th Avenue South #738		Birmingham	AL	35205
St. Vincent Hospital	835 S. Van Buren Street		Green Bay	WI	54301
St. Vincent's Medical Center	1 Shircliff Way		Jacksonville	FL	32204
St. Vincent's Medical Center	2800 Main Street		Bridgeport	CT	06606
St.Vincent's East	50 Medical Park East Drive		Birmingham	AL	35235-3499
Stamford Hospital Health Sciences Library	30 Shelbourne Road PO Box 9317		Stamford	CT	06904-9317
Staten Island University Hospital	475 Seaview Avenue		Staten Island	NY	10305
Stone Crest Medical Center	200 Stonecrest Boulevard		Smyrna	TN	37167
Stony Brook University Medical Center	3 Technology Drive		East Setauket	NY	11733-4073
Stormont-Vail Regional Medical Center	929 SW Mulvane Street		Topeka	KS	66606
Straub Clinic & Hospital: Cath Lab	888 S. King Street		Honolulu	HI	96813
Stringfellow Memorial Hospital	301 East 18th Street		Anniston	AL	36202
Summerlin Hospital Medical Center	657 Town Center Drive		Las Vegas	NV	89144
Summit Medical Center	5655 Frist Boulevard		Hermitage	TN	37076
Sunrise Hospital and Medical Center	3186 S. Maryland Parkway		Las Vegas	NV	89109
Surgery Center of Temple	1909 SW MK Dodgen Loop		Temple	TX	76502
Sutter Delta Medical Center	3901 Lone Tree Way		Antioch	CA	94509
Sutter Roseville Medical Center	One Medical Plaza		Roseville	CA	95661
Swedish American Hospital	1401 E. State Street		Rockford	IL	61104
Swedish Covenant Hospital	5145 N. California Avenue		Chicago	IL	60625
Swedish Health Services	500 17th Avenue #A85C		Seattle	WA	98104
Swedish Medical Center	501 East Hampden Avenue		Englewood	CO	80113
T. J. Samson Community Hospital	1301 North Race Street		Glasgow	KY	42141
Tacoma General Hospital	315 Martin Luther King, Jr. Way		Tacoma	WA	98415
Tallahassee Memorial Hospital	1300 Miccosukee Road	Attn: Performance Improvement	Tallahassee	FL	32308
Tampa General Hospital	1 Tampa General Circle		Tampa	FL	33601-1289
Temple University Hospital	3401 North Broad Street	1 PP Cardiology	Philadelphia	PA	19140
Terre Haute Regional Hospital	3901 South 7th Street		Terre Haute	IN	47802
Terrebonne General Medical Center	8166 Main Street		Houma	LA	70360
Texas Health Presbyterian Hospital Plano	6200 West Parker Road		Plano	TX	75093-7914
Texoma Medical Center	1000 Memorial Drive		Denison	TX	75020
TexSAn Heart Hospital	6700 IH-10 West		San Antonio	TX	78201-2009
The Christ Hospital	2139 Auburn Avenue		Cincinnati	OH	45219
The George Washington University Hospital	900 23rd Street, NW		Washington	DC	20037

Facility Name	Address 1	Address 2	City	State	Zip Code
The Good Samaritan Hospital	PO Box 1281	4th and Walnut Streets	Lebanon	PA	17042
The Heart Hospital at Deaconess Gateway, LLC	600 Mary Street		Evansville	IN	47747
The Heart Hospital of Northwest Texas	1501 S. Coulter Street	PO Box 1110	Amarillo	TX	79175
The Hospital at Westlake Medical Center	5656 Bee Caves Road M-302		Austin	TX	78746
The Indiana Heart Hospital	8075 North Shadeland Avenue		Indianapolis	IN	46250
The Medical Center (TMC)	1000 Dutch Ridge Road		Beaver	PA	15009
The Medical Center of Southeast Texas	2555 Jimmy Johnson Boulevard		Port Arthur	TX	77640
The Methodist DeBakey Heart Center	6565 Fannin Street		Houston	TX	77030
The Monroe Clinic	515 22nd Avenue		Monroe	WI	53566
The Nebraska Medical Center	987551 Nebraska Medical Center		Omaha	NE	68198-7551
The Ohio State University Medical Center	410 W. 10th Avenue	142 Doan Hall	Columbus	OH	43210
The Reading Hospital and Medical Center	6th Avenue and Spruce Street		West Reading	PA	19611
The Toledo Hospital	2142 North Cove Boulevard	Jobst Tower Suite 200	Toledo	OH	43606
The Uniontown Hospital	500 West Berkeley Street		Uniontown	PA	15401
The Washington Hospital	155 Wilson Avenue		Washington	PA	15301-3398
The Western Pennsylvania Hospital	4800 Friendship Avenue	CVI	Pittsburgh	PA	15224
Thomas Jefferson University Hospital	TJUH	111 S. 11th Street Gibbon Building	Philadelphia	PA	19107
Thomas Memorial Hospital	4605 MacCorkle Avenue SW		South Charleston	WV	25309
Tift Regional Medical Center	PO Box 747	901 E. 18th Street	Tifton	GA	31794
Timpanogos Regional Hospital	750 W. 800 S.		Orem	UT	84057
Tobey Hospital	363 Highland Avenue		Fall River	MA	
Torrance Memorial Medical Center	3330 Lomita Boulevard		Lomita	CA	90505
Touro Infirmary Medical Center	1401 Foucher Street		New Orleans	LA	70115
Tri-City Medical Center	3909 Waring Road		Oceanside	CA	92056
Trident Regional Medical Center	9330 Medical Plaza Drive		Charleston	SC	29406
Trinity Hospitals	PO Box 5020		Minot	ND	58702
Trinity Medical Center	Attn: Cardiovascular Services	800 Montclair Road	Birmingham	AL	35213
Trinity Medical Center West	4000 Johnson Road		Steubenville	OH	43952
Truman Medical Centers	2301 Holmes Street		Kansas City	MO	64108
Tucson Heart Hospital	4888 North Stone Avenue		Tucson	AZ	85704
Tucson Medical Center	5301 E. Grant Road		Tucson	AZ	85712
Tufts Medical Center	750 Washington Street		Boston	MA	02111
Tulane Medical Center	1415 Tulane Avenue		New Orleans	LA	70112
Tuomey Healthcare System Tuomey Regional Medical Center	129 N. Washington Street		Sumter	SC	29150
UC San Diego Medical Center	200 W. Arbor Drive		San Diego	CA	92103
UMASS Memorial Medical Center	55 Lake Ave North		Worcester	MA	01655-0002
Union Hospital	1606 N. 7th Street		Terre Haute	IN	47804
Union Hospital	106 Bow Street		Elkton	MD	21921
Union Memorial Hospital	201 E. University Parkway		Baltimore	MD	21218-2891
United Health Services Hospitals/Wilson Regional Medical Center	33 – 57 Harrison Street	Decker 4 Lobby	Johnson City	NY	13790
United Hospital	333 N. Smith Avenue		St. Paul	MN	55102
United Hospital Center, Inc.	327 Medical Park Drive		Bridgeport	WV	26330
United Hospital System	6308 8th Avenue		Kenosha	WI	53143
United Regional Healthcare System	1600 11th Street		Wichita Falls	TX	76301
Unity Health Center	1102 West MacArthur		Shawnee	OK	74804
Unity Hospital	550 Osbourne Road NE		Fridley	MN	55432
Unity Hospital	1555 Long Pond Road		Rochester	NY	14626
University Community Hospital	3100 East Fletcher Avenue		Tampa	FL	33613
University Community Hospital Carrollwood Campus	3100 East Fletcher Avenue		Tampa	FL	33613
University of Alabama Hospital	620 19th Street South		Birmingham	AL	35249
University Hospital	234 Goodman Street		Cincinnati	OH	45219

Facility Name	Address 1	Address 2	City	State	Zip Code
University Hospital	1350 Walton Way		Augusta	GA	30901
University Hospitals Case Medical Center	11100 Euclid Avenue		Cleveland	OH	44106
University Hospitals Geauga Medical Center	13207 Ravenna Road		Chardon	OH	44024
University Hospitals Richmond Medical Center	27100 Chardon Road		Richmond Heights	OH	44143
University Medical Center	1411 Baddour Parkway		Lebanon	TN	37087
University Medical Center LSU	2390 W. Congress Street		Lafayette	IA	70506
University Medical Center Southern Nevada	1800 W. Charleston Boulevard		Las Vegas	NV	89102
University Medical Center of El Paso	4815 Alameda Avenue		El Paso	TX	79905
University of Arkansas Medical Sciences	4301 West Markham Street	Suite 532	Little Rock	AR	72205
University of California, Irvine	101 The City Drive		Orange	CA	92868
University Of California Davis Medical Center	2315 Stockton Boulevard Main Hospital, Rm 6312		Sacramento	CA	95817
University of California San Francisco Medical Center	350 Parnassus Avenue Suite 404 Box 0447		San Franciso	CA	94143-0447
University of Colorado Hospital Authority	12401 E. 17th Avenue	Mailstop B-132	Aurora	CO	80045
University of CT Health Center/John Dempsey Hospital	263 Farmington Avenue		Farmington	CT	06030
University of Florida (Shands)College of Medicine	1600 SW Archer Road		Gainesville	FL	32610
University of Kentucky	800 Rose Street		Lexington	KY	40536
University of Louisville Hospital	530 S. Jackson Street		Loiusville	KY	40202
University of Maryland Medical Center Cardiology	22 S. Greene Street		Baltimore	MD	21201-1544
University of Mississippi Medical Center	2500 N. State Street		Jackson	MS	39216
University of Missouri Hospital and Clinics	1 Hospital Drive C4003		Columbia	MO	65212
University of New Mexico Hospital	2211 Lomas Boulevard		Albuquerque	NM	87106
University of North Carolina Hospitals	UNC Hospitals	101 Manning Drive CB#7075	Chapel Hill	NC	27514
University of Rochester Medical Center	601 Elmwood Avenue		Rochester	NY	14642
University of South Alabama Cardiology Dept.	2451 Fillingim Street		Mobile	AL	36617
University of Tennessee Medical Center	1924 Alcoa Highway	Box 95	Knoxville	TN	37920-6999
University of Texas Southwestern-University Hospital	5323 Harry Hines Boulevard		Dallas	TX	75390-9013
University of Toledo Medical Center	3065 Arlington Avenue	DH2261	Toledo	OH	43614
University of Utah Hospitals and Clinics	50 North Medical Drive	4040b	Salt Lake City	UT	84132
University of Virginia Medical Center	2441 Barringer West Complex	PO Box 800134	Charlottesville	VA	22908-0679
University of Washington Medical Center	1959 NE Pacific Street		Seattle	WA	98195-6422
University of Wisconsin Hospital & Clinics	600 Highland Avenue MC 3204		Madison	WI	53792
University Physicians HealthCare	2800 E. Ajo Way		Tucson	AZ	85713
UPMC Mercy	1400 Locust Street		Pittsburgh	PA	15219
UPMC Passavant Hospital	9100 Babcock Boulevard		Pittsburgh	PA	15237
UPMC Presbyterian Hospital	4601 Baum Road	2nd Floor	Pittsburgh	PA	15213
UPMC Shadyside Hospital	4601 Baum Road	2nd Floor	Pittsburgh	PA	15213
Upper Chesapeake Medical Center, Inc.	500 Upper Chesapeake Drive		Bel Air	MD	21014
Upstate Medical University (SUNY)	750 East Adams Street		Syracuse	NY	13120
USC University Hospital	1500 San Pablo Street		Los Angeles	CA	90033
Utah Valley Regional Medical Center	1034 S. 500 W		Provo	UT	84605
Val Verde Regional Medical Center	801 Bedell Avenue		Del Rio	TX	78840
Valley Baptist Medical Center	2101 Pease Street		Harlingen	TX	78550
Valley Care Medical Center	1111 East Stanley Boulevard		Livermore	CA	94550
Valley Hospital Medical Center	620 Shadow Lane		Las Vegas	NV	89106
Valley Medical Center	400 South 43rd Street		Renton	WA	98058
Valley Presbyterian Hospital	15107 Vanowen Street		Van Nuys	CA	91405
Valley Regional Medical Center	Valley Regional Medical Center	100A East Alton Gloor Boulevard	Brownsville	TX	78526
Valley ViewMedical Center	5330 S Highway 95		Fort Mohave	AZ	86426

Facility Name	Address 1	Address 2	City	State	Zip Code
Vanderbilt Heart Institute	1215 21st Avenue	MCE 5th floor	Nashville	TN	37232
Vassar Brothers Medical Center	45 Reade Place		Poughkeepsie	NY	12601
Vaughan Regional Medical Center	1015 Medical Center Parkway		Selma	AL	36701
VCU-Medical College of Virginia	PO Box 980036		Richmond	VA	23298
Venice Regional Medical Center	540 The Rialto		Venice	FL	34285
Verde Valley Medical Center	269 South Candy Lane		Cotttonwood	AZ	86326
Via Christi Wichita Health Network	929 N. St. Francis Street		Wichita	KS	67214
WakeMed Cary Hospital	3128 Smoketree Court		Raleigh	NC	27604
WakeMed Raleigh Campus	3128 Smoketree Court		Raleigh	NC	27604
Washington Adventist Hospital	7600 Carroll Avenue		Takoma Park	MD	20912
Washington County Hospital	251 East Antietam Street		Hagerstown	MD	21740
Washington Hospital	2000 Mowry Avenue		Fremont	CA	94538
Washington Regional Medical Center	3215 N. Northhills Boulevard		Fayetteville	AR	72703-1994
Waterbury Hospital	PO Box 2153		Waterbury	CT	06722-2153
Waukesha Memorial Hospital	N-17 W24100 Riverwood Drive		Waukesha	WI	53188-1187
Weatherford Regional Medical Center	713 East Anderson Street		Weatherford	TX	76086
Weiss Memorial Hospital	4646 N. Marine Drive		Chicago	IL	60640
Wellmont Holston Valley Medical Center	130 W Ravine Road		Kingsport	TN	37660
Wellstar Cobb Hospital	677 Church Street		Marietta	GA	30066
Wellstar Kennestone Hospital	677 Church Street		Marietta	GA	30066
Wesley Medical Center	550 N. Hillside Street		Wichita	KS	67214
Wesley Medical Center	5001 Hardy Street		Hattiesburg	MS	39402
West Anaheim Medical Center	3033 West Orange Avenue		Anaheim	CA	92084
West Chester Medical Center	7700 University Drive		West Chester	OH	45069
West Florida Hospital	8383 North Davis Highway		Pensacola	FL	32514
West Georgia Medical Center	1514 Vernon Road		LaGrange	GA	30240
West Hills Hospital	7300 Medical Center Drive		West Hills	CA	91307
West Houston Medical Center	12141Richmond Avenue		Houston	TX	77082
West Jefferson Medical Center	1101 Medical Center Boulevard		Marrero	LA	70072
West Penn Hospital Forbes Regional Campus	2570 Haymaker Road		Monroeville	PA	15146
West Suburban Medical Center	3 Erie Court		Oak Park	Il	60302
West Valley Hospital	13677 W. McDowell Road		Goodyear	AZ	85338
Westchester County Medical Center	95 Grasslands Road Suite 114		Valhalla	NY	10595
Western Baptist Hospital	2501 Kentucky Avenue		Paducah	KY	42003
Western Maryland Health System Regional Medical Center	12500 Willowbrook Road	Third Floor InterventionalCardiology	Cumberland	MD	21502-1850
Western Medical Center Santa Ana	1001 North Tustin Avenue		Santa Ana	CA	92705
Western Plains Medical Center	3001 Avenue A		Dodge City	KS	67801
Westside Regional Medical Center	8201 West Broward Boulevard		Plantation	FL	33324
Wheaton Franciscan Healthcare-All Saints, Inc.	WFHC Clinical Data Management and Analysis	5000 West Chambers, M229	Milwaukee	WI	53210
Wheaton Franciscan Healthcare-St. Francis, Inc.	WFHC Clinical Data Management and Analysis	5000 West Chambers, M229	Milwaukee	WI	53210
Wheaton Franciscan Healthcare-St. Joseph, Inc.	WFH Clinical Data Management and Analysis	5000 West Chambers, M229	Milwaukee	WI	53210
Wheaton Franciscan - The Wisconsin Heart Hospital Center	WFH Clinical Data Management and Analysis	5000 West Chambers, M229	Milwaukee	WI	53210
Wheeling Hospital	1 Medical Park		Wheeling	WV	26003
White County Medical Center	3214 E. Race Avenue		Searcy	AR	72143
White Memorial Medical Center	1720 Cesar Chavez Avenue		Los Angeles	CA	90033
White Plains Hospital Center	41 E Post Road		White Plains	NY	10601
White River Medical Center	1710 Harrison Street		Batesville	AR	72501
William Beaumont Hospital – Troy	44201 Dequindre Road		Troy	MI	48085
William W. Backus Hospital	326 Washington Street		Norwich	CT	06360
Williamsport Hospital and Medical Center	777 Rural Avenue		Williamsport	PA	17701
Willis-Knighton Pierremont	2600 Greenwood Road		Shreveport	LA	71103

Facility Name	Address 1	Address 2	City	State	Zip Code
Willis-Knighton Medical Center	2600 Greenwood Road		Shreveport	LA	71103
Wilson N. Jones Medical Center	500 N Highland Avenue		Sherman	TX	75092
Winchester Medical Center Inc.	220 Campus Boulevard	Suite 313	Winchester	VA	22601
Winter Haven Hospital	20005 Avenue F Northeast		Winter Haven	FL	33881
Wise Regional Health System	609 Medical Center Drive		Decatur	TX	76234
Wishard Hospital Cardiology	1001 W. 10th Street		Indianapolis	IN	46202
Woman's Christian Association Hospital	207 Foote Avenue		Jamestown	NY	14701
Woodland Healthcare	1325 Cottonwood Street		Woodland	CA	95695
Wooster Community Hospital	1761 Beall Avenue		Wooster	OH	44691
Wuesthoff Health System	110 Longwood Avenue		Rockledge	FL	32956-5002
Wyckoff Heights Medical Center	374 Stockholm Street	Division of Cardiology -3rd Floor	Brooklyn	NY	11237
Wyoming Medical Center	1233 East 2nd Street		Casper	WY	82601-2988
Wyoming Valley Health Care System	575 North River Street		Wilkes-Barre	PA	18764
Yakima Regional Medical Center/Cardiac Center	110 S. 9th Avenue		Yakima	WA	98902
Yavapai Regional Medical Center	1003 Willow Creek Road		Prescott	AZ	86301
York Hospital	15 Hospital Drive		York	ME	03909
York Hospital	1001 South George Street		York	PA	17405
Yuma Regional Medical Center	2400 S. Avenue A		Yuma	AZ	85364

BILLING CODE 4120–01–C

Addendum IX: Active CMS Coverage-Related Guidance Documents (January Through March 2011)

Addendum IX includes a list of active CMS guidance documents. As required by section 731 of the Medicare Prescription Drug, Improvement, and Modernization Act of 2003 (MMA) (Pub. L. 108–173, enacted on December 8, 2003), we began listing the current versions of our guidance documents in each quarterly listings notice.

In the September 24, 2004 **Federal Register** (69 FR 57325), we published a notice in which we explained how we would develop coverage-related guidance documents. These guidance documents are issued pursuant to section 1862(l)(1) of the Social Security. In our notice, we committed to the public that, ''At regular intervals, we will update a list of all guidance documents in the **Federal Register**.''

Addendum IX includes a list of active CMS guidance documents as of the ending date of the period covered by this notice.

Document Name: Factors CMS Considers in Commissioning External Technology Assessments.

Date of Issuance: April 11, 2006.

Document Name: Factors CMS Considers in Opening a National Coverage Determination.

Date of Issuance: April 11, 2006.

Document Name: Factors CMS Considers in Referring Topics to the Medicare Coverage Advisory Committee.

Date of Issuance: December 12, 2006.

Document Name: National Coverage Determinations with Data Collection as a Condition of Coverage: Coverage With Evidence Development.

Date of Issuance: July 12, 2006.

For the purposes of this quarterly notice, we list the active coverage-related guidance documents as of the ending date of the period covered by this notice. Based on our proposal for future quarterly notices, we would discontinue publishing this addendum unless there was an update to the list of guidance documents. We would continue to provide the hyperlink to the Web site to access this information and a contact person for questions or additional information.

To obtain full-text copies of these documents, visit the CMS Coverage Web site at *http://www.cms.gov/mcd/index_list.asp?list_type=mcd_1* and click on the archives link.

For questions or additional information, contact Lori Ashby (410–786–6322).

Addendum X: List of Special One-Time Notices Regarding National Coverage Provisions (January Through March 2011)

Addendum X includes a list of special one-time notices regarding national coverage provisions. We publish a list of issues that require public notification, such as a particular clinical trial or research study that qualifies for Medicare coverage.

As medical technologies, the contexts under which they are delivered, and the health needs of Medicare beneficiaries grow increasingly complex, our national coverage determination (NCD) process must adapt to accommodate these complexities. As part of this adaptation, our national coverage decisions often include multi-faceted coverage determinations, which may place conditions on the patient populations eligible for coverage of a particular item or service, the providers who deliver a particular service, or the methods in which data are collected to supplement the delivery of the item or service (such as participation in a clinical trial).

We outline these conditions as we release new or revised NCDs. Details surrounding these conditions, however, may need to be shared with the public as ''one-time notices'' in the **Federal Register**. For example, we may require that a particular medical service may be delivered only in the context of a CMS-recognized clinical research study, which was not named in the NCD itself. We would then use Addendum X of this notice, along with our coverage Web site at *http://www.cms.hhs.gov/coverage,* to provide the public with information about the clinical research study that it ultimately recognizes.

There were no special one-time notices regarding national coverage provisions published in the January through March 2011 quarter.

For the purposes of this quarterly notice, we provide the information that there are no special one-time notices as of the ending date of the period covered by this notice. Based on our proposal for future quarterly notices, we would discontinue publishing this addendum unless there was a circumstance requiring publication of a special one-time notice. We would continue to provide the hyperlink to the Web site to access this information and a contact person for questions or additional information.

This information is available at *http://www.cms.hhs.gov/coverage.*

For questions or additional information, contact Lori Ashby (410–786–6322).

Addendum XI: National Oncologic PET Registry (NOPR) (January Through March 2011)

Addendum XI includes a listing of National Oncologic Positron Emission Tomography Registry (NOPR) sites. We cover positron emission tomography (PET) scans for particular oncologic indications when they are performed in a facility that participates in the NOPR.

In January 2005, we issued our decision memorandum on positron emission tomography (PET) scans, which stated that CMS would cover PET scans for particular oncologic indications, as long as they were performed in the context of a clinical study. We have since recognized the National Oncologic PET Registry as one of these clinical studies. Therefore, in order for a beneficiary to receive a Medicare-covered PET scan, the beneficiary must receive the scan in a facility that participates in the registry.

For the purposes of this quarterly notice, we provide the list of facilities that meet CMS's requirements for performing PET scans under National Coverage Determination CAG–00181N as of the ending date of the period covered by this notice. Based on our proposal for future quarterly notices, we would provide only the specific updates that have occurred in the three-month period along with a hyperlink to the Web site to access this information and a contact person for questions or additional information.

This information is available at *http://www.cms.gov/MedicareApprovedFacilitie/NOPR/list.asp#TopOfPage.*

For questions or additional information, contact Stuart Caplan, RN, MAS (410–786–8564).

BILLING CODE 4120–01–P

Facility Name	Provider Number	Date Approved	State	Other Information
Barnes-Jewish Hospital Barnes-Jewish Plaza/Mailstop # 90-72-374 St. Louis, Missouri 63110	E40080	03/07/2006	MO	
Duke University Medical Center PET Facility Room 0402 Duke So. Durham, North Carolina 27710	34003	03/07/2006	NC	Yellow Zone Box 3949
VCU Health System - Molecular Imaging Center Dept of Nuclear Medicine-North Hos 7th Floor Richmond, Virginia 23298	490032	03/07/2006	VA	1300 East Marshall-PO Box 980001
Acadiana Oncologic Imaging 2311 Kaliste Saloom Road Lafayette, LA 70508	5CA64	03/06/2006	LA	
Adler Institute for Advanced Imaging 261 Old York Road, Ste 106 Jenkintown, PA 19046		03/07/2006	PA	
Advanced Medical Imaging San Saba 215 N San Saba, Ste 107 San Antonio, TX 78207	00BC90	03/07/2006	TX	
Advanced Medical Imaging Stone Oak 540 Oak Centre, Ste 100 San Antonio, TX 78258	00BC90	03/07/2006	TX	
Advanced Radiological PET Imaging, PC 2334 30th Avenue Antoria, NY 11102	05677	03/07/2006	NY	Lower Level
Akron Regional PET Scan, LLC 3009 Smith Road, Ste 350 Akron, OH 44333	AKID01691	03/07/2006	OH	
American Radiology Services-Owings Mills 21 Crossroads Dr, Ste 100 Owings Mills, MD 21117	434L	03/07/2006	MD	
American Radiology Services-Bethesda 6430 Rockledge Drive, Ste 100 Bethesda, MD 20817	G00000	03/07/2006	MD	
American Radiology Services-Waldorf 3510 Old Washington Road, Ste 101 Waldorf, MD 20602	435L	03/07/2006	MD	
American Radiology Services-Columbia MD 8820 Columbia Parkway 100 Columbia, MD 21045	434L	03/07/2006	MD	
American Radiology Services-Frederick MD 141 Thomas Johnson Drive, Ste 170 Frederick, MD 21702	435L	03/07/2006	MD	
American Radiology Services-Timonium 2080 York Road, Ste 160 Timonium, MD 21093	434L	03/07/2006	MD	
Angel Williamson Imaging Center-Ft. Walton Beach 1013-D Mar-Walt Drive Ft. Walton Beach, FL 32547	39953A	03/07/2006	FL	
Angel Williamson Imaging Center-Pensacola 5120 Bayou Boulevard, Ste 9 Pensacola, FL 32503	39953	03/07/2006	FL	
Edison Imaging Center 3900 Park Avenue, Ste 107 Edison, NJ 08820	AS008835	03/07/2006	NJ	
National PET Centers LLC. 19250 Bagley Road, Suite 203 Middleburg Heights, OH 44130	MC4039571	03/07/2006	OH	dba. Great Lakes Medical Imaging
Baltimore Imaging Centers 3708 Mountain Road Pasadena, MD 21122	H476	03/07/2006	MD	
Baptist Hospital PET/CT 1000 West Moreno Street Pensacola, FL 32501	100093	03/07/2006	FL	
Bethesda Health City 2623 S Seacrest Boulevard Boynton Beach, FL 33435	40237	03/07/2006	FL	
PET/CT Imaging at White Marsh 9900 Franklin Square Drive, Suite D Nottingham, MD 21236	FMNX01	03/07/2006	MD	
Biomedical Research Foundation PET Imaging Ctr. 1505 Kings Hwy Shreveport, LA 71103	5D914	03/07/2006	LA	
BodyScan of Louisville LLC 807 Shelbyville Road, Ste 201 Louisville, KY 40222	9372701	03/07/2006	KY	
Bradley Regional PET Imaging Cleveland, TN 37311	3373976	03/07/2006	TN	2305 Chambliss Ave NW
PET Imaging Institute of NJ 1608 Rt 88 West, Ste 302 Brick, NJ 08724	070684	03/07/2006	NJ	
Broward PET Imaging Center, LLC 4850 W. Oakland Park Boulevard., Suite A Fort Lauderdale, FL 33313	E5709	03/07/2006	FL	
Insight Imaging Ahwatukee 15215 S 48th Street #110 Phoenix, AZ 85044	1457516338	03/07/2006	AZ	
California Imaging and Treatment Center 3000 Oak Road, #111 Walnut Creek, CA 95497	ZZZ27175Z	03/07/2006	CA	
Cancer Care Centers of Brevard 1430 S Pine Street Melbourne, FL 32901	39835	03/07/2006	FL	
Center for Medical Imaging - Florida Hospital 1922 Salk Avenue Tavares, FL 32778	100057	03/07/2006	FL	
Cancer Center of Colorado Springs 320 E Fontanero, Ste 200 Colorado Springs, CO 80907	79804	03/07/2006	CO	
Centro Sononuclear de Rio Piedras 1028 Los Angeles Street. San Juan, PR 00926	83910	03/07/2006	PR	
Chattanooga Imaging East 1710 Gunbarrel Road Chattanooga, TN 37421	3716643	03/07/2006	TN	
Chester County PET Associates 701 East Chester Marshall Street West Chester PA 19380	085698	03/07/2006	PA	
Cincinnati PET Scan, LLC – Kenwood 7730 Montgomery Road, Ste 120 Cincinnati, OH 45236	311754291	03/07/2006	OH	
Cincinnati PET Scan, LLC - Monfort Heights 5575 Cheviot Road Cincinnati, OH 45247	360234	03/07/2006	OH	
Clinical PET of Hernando 4003 Mariner Boulevard Spring Hill, FL 34609	L13228	03/07/2006	FL	
Clinical PET of Citrus 6140 W Corporate Oaks Drive Crystal River, FL 34429	U0121	03/07/2006	FL	
Clinical PET of Lake City 484 SW Commerce Drive, Ste 145 Lake City, FL 32025	V2683	03/07/2006	FL	
Clinical PET of Ocala 3143 SW 32nd Avenue, Ste 100 Ocala, FL 34474	E7179	03/07/2006	FL	
Columbus Regional Hospital 2400 East 17th Street Columbus, IN 47201	150112	03/07/2006	IN	
Concord Imaging 18802 Meisner Drive San Antonio TX 78258	00126Z	03/07/2006	TX	
Dartmouth Hitchcock Medical Center One Medical Center Drive Lebanon, NH 03756		03/07/2006	NH	
Dedicated PET Imaging 2315 Sunset Boulevard, Ste E Steubenville, OH 43952	01181	03/07/2006	OH	
Diablo Valley Oncology & Hematology Med. Group 3000 Oak Road, #111 Walnut Creek, CA 94597	ZZZ26796Z	03/07/2006	CA	
Diagnostic Imaging at Baywalk 129 1st Avenue N St. Petersburg, FL 33701	00022	03/07/2006	FL	
DMS Imaging 2101 N University Drive Fargo, ND 58109		03/07/2006	ND	PO Box 8070
Doylestown PET Associates 599 W. State Street Doylestown PA 18901	059536	03/07/2006	PA	Suite 202
East Bay Medical Onc. - Hematology Assoc. Inc 3000 Oak Road, #111 Walnut Creek, CA 94597	ZZZ267792	03/07/2006	CA	
East River Medical Imaging 519 East 72 Street, Ste 103 New York, NY 10021	W11781	03/07/2006	NY	
El Camino Imaging Center 8020 Constitution Place NE Albuerque, NM 87110	237150	03/07/2006	NM	
Elite Imaging LLC 2845 Aventura Boulevard, Ste 145 Aventura, FL 33180	K3535	03/07/2006	FL	
EPIC Imaging Center 233 NE 102 Avenue Portland, OR 97220	0000WCGNQ	03/07/2006	OR	
Evergreen Radia 11521 NE 128th Street Kirkland, WA 98034	GAB39931	03/07/2006	WA	
Excel Diagnostics Imaging Clinics 9701 Richmond Avenue, Ste 122 Houston, TX 77042	FTA109	03/07/2006	TX	

Facility Name	Provider Number	Date Approved	State	Other Information
First Imaging of the Carolinas 30 Memorial Drive Pinehurst NC 29374	2346997	03/07/2006	NC	
Florida Hospital Advanced Nuclear Imaging PET 328 Spruce Street Orlando, FL 32804	100007	03/07/2006	FL	
Fort Jesse Imaging Center LLC 2200 Fort Jesse Road, Ste 120 Normal, IL 61761	209824	03/07/2006	IL	
Fox Chase Cancer Center 333 Cotman Avenue Philadelphia, PA 19111	390196	03/07/2006	PA	
Frederick Imaging Centers 46B Thomas Johnson Drive Frederick, MD 21702	H476	03/07/2006	MD	
Fusion Diagstic Group, LLC 1700 California Street, Ste 260 San Francisco, CA 94109	00G366470	03/07/2006	CA	
Fusion Imaging Institute 2419 E. Commercial Boulevard, Ste 101Ft. Lauderdale, FL 33308	18281	03/07/2006	FL	
Future Diagnostics Group 254 N. Republic Avenue Joliet, IL 60435	200825	03/07/2006	IL	
Greater Niagra PET, LLC 1 Columbia Drive, Ste 3 Niagra Falls,NY 14305	BA0213	03/07/2006	NY	Witmer Park Medical Center
Hematology Oncology Associates of Baton Rouge 4950 Essen Lane Baton Rouge, LA 70809	5C696	03/07/2006	LA	
Gulf Coast Cancer & Diagnostic of Southeast 12811 Beamer Road Houston,TX 77089	149949301	03/07/2006	TX	
Henry Ford, Department of Radiology 2799 W Grand Boulevard Detroit, MI 48202	230053	03/07/2006	MI	
High Point Regional Health System 601 N Elm Street High Point, NC 27262	3400040	03/07/2006	NC	
Highlands Oncology Group 3232 N. North Hills Boulevard Fayetteville, AR 27203	5B823	03/07/2006	AR	
Holy Name Hospital 718 Teaneck Road Teaneck, NJ 07666	310008	03/07/2006	NJ	PET/CT Center
Holy Family Memorial Medical Center PO Box 1450 Manitowoc, WI 54221	520107	03/07/2006	WI	2300 Western Ave
Hospital of Saint Raphael 1450 Chapel Street New Haven, CT 05611	070001	03/07/2006	CT	
San Patricio MRI & CT Center 1508 Roosevelt Avenue, Ste 103 San Juan, PR 00920	84997	03/07/2006	PR	
Imaging Center of Hartford Hospital 80 Seymour Street, PO Box 5037 Hartford, CN 06102	070025	03/07/2006	CT	
Indian Wells PET/CT Center 74785 Hwy 111, #101 Indian Wells, CA 92210	1264523891	03/07/2006	CA	
Imaging Technology Associates 3800 Reservoir Road NW Washignton DC 20007	FDNCX1	03/07/2006	DC	Gorman 2043, PET Scan
San Francisco Magnetic Resonace Ctr. 1180 Post Street San Francisco, CA 94109	ZZZ27498Z	03/07/2006	CA	
Intermountain Medical Imaging 2929 E Magic View Drive Meridian, ID 83642	82-05144-22	03/07/2006	ID	
Jefferson Center City Imaging 850 Walnut Street Philadelphia PA 19107	66277	03/07/2006	PA	
Kansas City Cancer Center – Kansas 12200 W 110th Street Overland Park, KS 66210	5650000D	03/07/2006	KS	
Kansas City Cancer Center – Missouri 4881 Goodview Circle Lee's Summit MO 66064	5650000E	03/07/2006	MO	
LakePointe PET 10914 Hefner Pointe Drive, Ste. 100 Oklahoma City, OK 73120	700522143	03/07/2006	OK	
Kreitchman PET Center 180 Ft Washington Avenue, HP3-315 New York, NY 10032	WEM661	03/07/2006	NY	
Lakeshore PET Imaging, LLC 4932 W 95th Street Oak Lawn, IL 60453	200108	03/07/2006	IL	
Larchmont Imaging Associates, LLC 210 Ark Road Mt. Laurel NJ 8054	517216	03/07/2006	NJ	
Las Cruces PET/CT Imaging 1121 Mall Drive, Ste D Las Cruces NM 88011	300521065	03/07/2006	NM	
Lehigh Valley Diagnostic Imaging Pet/CT 1230 S. Cedar Crest Boulevard., Suite 104 Allentown, PA 18103	563802	03/07/2006	PA	
LifeScan Louisville, LLC 4046 Dutchmans Lane Louisville, KY 40207	9365601	03/07/2006	KY	
Limerick PET Associates 420 W. Linfield-Trappe Road Limerick PA 19468	075015	03/07/2006	PA	Suite 3400, Third Floor, Rear
LifeScan Minnesota 6525 France Avenue S, Ste 225 Edina, MN 55435	470000014	03/07/2006	MN	
Louisiana PET Imaging of Alexandra, LLC 5419 A Jackson Street Ext Alexandria, LA 71303	5C743	03/07/2006	LA	
LMR PET 12600 Creekside Lane Ft. Meyers, FL 33919	E5725	03/07/2006	FL	
Louisiana PET Imaging of Lake Charles, LLC 1750 Ryan Street Lake Charles, LA 70601	5C905	03/07/2006	LA	
Insight Diagnostic Center - Forest Lane 11617 N Central Expressway, #132 Dallas, TX 75243	FTA016	03/07/2006	TX	
MDI of Thousand Oaks 300 Lombard Street Thousand Oaks, CA 91360	W14186	03/07/2006	CA	
Meadowbrook PET Associates 1695 Huntington Pike Meadowbrook PA 19046	064866	03/08/2006	PA	
Medical Imaging of Baltimore 6715 N Charles Street Baltimore, MD 21204	258L	03/08/2006	MD	
Metabolic Imaging of Laredo 2344 Laguna Del Mar, Ste 5 & 6 Laredo, TX 78045	FTN029	03/08/2006	TX	
Methodist Hospital PET Imaging Center 301 W Huntington Drive, Ste 120 Arcadia, CA 91007	9511643336	03/08/2006	CA	
Metro Region Pet Center at Chevy Chase 5454 Wisconsin Avenue, Ste 810 Chevy Chase, MD 20815	724811	03/08/2006	MD	
SSM PET Imaging, St. Joseph Medical Park 1475 Kisker Road St. Charles, MO 63304	26-0005	03/08/2006	MO	
Metro Region PET Ctr. at Woodburn Nuclear Med. 3289 Woodburn Road Annandale, VA 22003	724811	03/08/2006	VA	
Michiana Hematology - Oncology, PC 100 Navarre Place, Ste 5550 South Bend, IN 46601	216950	03/08/2006	IN	
Michigan State University-Radiology 184 Radiology Building East Lansing MI 48824	OC36350	03/08/2006	MI	
Clinical P.E.T. of West County 450 North New Ballas Creve Coeur, MO 63141	000093043	03/08/2006	MO	
Modality Integration Services, Inc 1854 SW Greenway Circle West Linn, OR 97068		03/08/2006	OR	
Molecular Imaging Center 1733 Curie Drive, Suite 305 El Paso, TX 79912	00315U	03/08/2006	TX	
Molecular Imaging of Suburban Chicago, LLC 908 N. Elm Street, Ste 110 Hinsdale, IL 60521	212300	03/08/2006	IL	
Montclair Road Imaging LLC 924 Montclair Road, Ste 108 Birmingham, AL 35213	000056277	03/08/2006	AL	
Montefiore Medical Center 1695A Eastchester Road Bronx NY 10461	W06552	03/08/2006	NY	
Neurodiagnostics, PSC 1725 Harrodsburg Road, Ste 100 Lexington, KY 40504	0406	03/08/2006	KY	
New Century Imaging 555 Kinderkamack Road Oradel, NJ 07649	085146	03/08/2006	NJ	
Newport Diagnostic Center 1605 Avocado Avenue Newport Beach, CA 92660	W13396	03/08/2006	CA	
Next Generation Radiology PET/CT 560 Northern Boulevard, Ste 111 Great Neck, NY 11021	WR6091	03/08/2006	NY	
North Valley Advance Imaging 1638 Esplanade Chico, CA 95926	1699927988	03/08/2006	CA	

Facility Name	Provider Number	Date Approved	State	Other Information
Northwest Alabama Cancer Ctr. Radiolog. Services 302 W. Dr. Hicks Boulevard Florence AL 35630	051552219	03/08/2006	AL	
Northern Kentucky PET Scan, LLC 651 Centre View Boulevard Crestview Hills, KY 41017	311754291	03/08/2006	KY	
Northwest Cancer Center 17323 Red Oak Drive Houston, TX 77090	00D29C	03/08/2006	TX	
Northwestern Memorial Hospital 251 East Huron Street Chicago, IL 60611	140281	03/08/2006	IL	Galter 8-113
Northern Shared Medical Services-Atlantic, IA 1501 East Tenth Street Atlantic, IA 50022	I16068	03/08/2006	IA	Cass County Memorial Hospital
Northern Shared Medical Services-Audubon, IA 515 Pacific Street Audobon, Iowa 50025	I16068	03/08/2006	IA	Audobon County Memorial Hospital
Northern Shared Medical Services-Beloit, KS 400 West Eighth Street Beloit ,KS 67420	130618	03/10/2006	KS	Mitchell County Hospital
Northern Shared Medical Services-Bloomfield, IA 507 North Madison Street Bloomfield, IA 52537	I16068	03/10/2006	KS	Davis County Hospital
Northern Shared Medical Services-Carrollton, MO 1502 North Jefferson Street Carrollton, MO 64633	000047013	03/10/2006	MO	Carroll County Memorial Hospital
Northern Shared Medical Services-Centerville, IA 1st St Joseph Drive Centerville, IA 52544	I16068	03/10/2006	IA	Mercy Medical Center
Northern Shared Medical Services-Carthage, IL 160 S. Adams Street Carthage, IL 62321	208196	03/10/2006	IL	Memorial Hospital
Northern Shared Medical Services-Clarinda, IA 823 S. 17th Street Clarinda, IA 51632	I16068	03/10/2006	IA	Clarinda Regional Health Center
Northern Shared Medical Services-Chanute, KS 629 South Plummer Avenue Chanute, KS 66720	130618	03/10/2006	KS	Neosho Memorial Regional Medical Center
Northern Shared Medical Services-Edwardsville, IL 1121 University Drive Edwardsville, IL 62025	208196	03/10/2006	IL	Edwardsville Health Center
Northern Shared Medical Services-El Dorado, AR 700 West Grove Street El Dorado, AR 71730	5F168	03/10/2006	AR	Medical Center of South Arkansas
Northern Shared Medical Services-Farmington, MO 1212 Weber Road Farmington, MO 63640	000047013	03/10/2006	MO	Mineral Area Regional Medical Center
Northern Shared Medical Services-Janesville, WI 1321 Creston Park Drive Janesville, WI 53545	000092420	03/10/2006	WI	Janesville Occupational Health & Medical Center
Northern Shared Medical Services-Hiawatha, KS 300 Utah Street Hiawatha, KS 66434	130618	03/10/2006	KS	Hiawatha Community Hospital
Northern Shared Medical Services-Keokuk, IA 1600 Morgan Street Keokuk, IA 52632	I16068	03/10/2006	IA	Keokuk Area Hospital
Northern Shared Medical Services-Macomb, IL 525 East Grant Street Macomb, IL 61455	208196	03/10/2006	IL	McDonough District Hospital
Northern Shared Medical Services-Mexico, MO 620 East Monroe Street Mexico, MO 65265	000047013	03/10/2006	MO	Audrain Medical Center
Northern Shared Medical Services-Moberly, MO 1515 Union Avenue Moberly, MO 65270	000047013	03/10/2006	MO	Moberly Regional Medical Center
Northern Shared Medical Services - Mountain Home, AR 899 Burnett Drive Mountain Home, AR 72653	5F168	03/10/2006	AR	Cogburn Cancer Clinic
Northern Shared Medical Services - Poplar Bluff, MO 221 Physicians Park Drive Poplar Bluff, MO 63901	000047013	03/10/2006	MO	Poplar Bluff Medical Partners
Northern Shared Medical Services - Perryville, MO 434 North West Street Perryville, MO 63775	000047013	03/10/2006	MO	Perry County Memorial Hospital
Northern Shared Medical Services - Rolla, MO 1000 West Tenth Street Rolla MO 65401	000047013	03/10/2006	MO	Phelps Co Regional Medical Center
Northern Shared Medical Services - Virginia, MN 901 Ninth Street North Virginia MN 55792	470000057	03/10/2006	MN	Virginia Regional Medical Center
Northern Shared Medical Services - Russellville, AR 2504 West Main Street Russellville AR 72801	5F168	03/10/2006	AR	Russellville Land Co
Northern Shared Medical Services - West Plains, MO 1100 Kentucky Avenue West Plains MO 65775	000047013	03/10/2006	MO	Ozarks Medical Center
Oakwood Hospital Medical Center 18101 Oakwood Boulevard Dearborn MI 48124	230020	03/10/2006	MI	
Oakwood Southshore Medical Center 5450 Fort Street Trenton MI 48183	230176	03/10/2006	MI	
Ocean Medical Imaging Center 21 Stockton Drive Toms River NJ 08755	158432	03/10/2006	NJ	
Orange County Regional PET Center, LLC 16300 Sand Canyon Avenue, Ste 103 Irvine CA 92618	TP018	03/10/2006	CA	
Orange Advanced Imaging Center 230 Main Street, #101 Orange CA 92868	TP016A	03/10/2006	CA	
Pacific Coast Imaging – Irvine 250 E Yale Loop, Ste A Irvine CA 92604	WG87478B	03/10/2006	CA	
Pacific Coast Imaging – Newport 3300 West Coast Hwy Newport Beach CA 92663	WG87478	03/10/2006	CA	
Pacific Imaging and Treatment Center 5395 Ruffin Road, Ste 202 San Diego CA 92123	TP126	03/10/2006	CA	
Palm Beach Cancer Institute 1395 State Road 7, Ste 310 Wellington FL 33414	34754	03/10/2006	FL	
Pennsylvania PET Associates 800 Spruce Street Philadelphia PA 19107	066282	03/10/2006	PA	Second Floor, Widener Building
PET Center of Western NY 127 North Street Batavia NY 14020	187140	03/10/2006	NY	
Phoenix PET Partners, LLC 4540 E. Cotton Gin Loop, Ste. 150 Phoenix, AZ 85040	Z117647	03/10/2006	AZ	
PET Imaging at the Lake 5000 Hennessy Boulevard Baton Rouge LA 70809	5C868	03/10/2006	LA	
PET Imaging Center at Harford County 602 S Atwood Road, Ste 201 Bel Air MD 21014	FMN006	03/10/2006	MD	
PET Imaging Institute of South Florida – East 1150 N 35th Avenue, 665 Hollywood FL 33021	E3783	03/10/2006	FL	
PET Imaging Institute of South Florida – West 603 N Flamingo Road, S-155 Pembroke Pines FL 33028	E3783	03/10/2006	FL	
PET Scan Arizona – Peoria 13460 N 94th Drive, Ste J1 Peoria AZ 85381	75400	03/10/2006	AZ	
PET Scan Arizona – Phoenix 6036 N 19th Avenue, Ste 305 Phoenix AZ 85015	66860	03/10/2006	AZ	
PET/CT Diagnostic Medical Imaging, PC 1200 Waters Place, Ste M108 Bronx NY 10461	W31091	03/10/2006	NY	
Precision Imaging 4416 East West Highway, Ste 410 Bethesda MD 20814	FMN005	03/10/2006	MD	
Preferred PET Imaging of Kansas, LLC 928 N St. Francis Street Wichita KS 67214	110693	03/10/2006	KS	
Premium Diagnostics Center 5319 Hoag Drive, Ste 130 Elyria OH 44035	ID01851	03/10/2006	OH	
PET Center Ft. Worth 800 W. Magnolia Avenue Fort Woth TX 76104	0J062	03/10/2006	TX	Suite 100

Facility Name	Provider Number	Date Approved	State	Other Information
Radiology Associates, LLP 6001 S. Staples Street Corpus Christi TX 78413	00E816	03/10/2006	TX	
S. Arlington Imaging Center 4601 Matlock Road Arlington TX 76018	0J062	03/10/2006	TX	
Radiology Group Imaging Center, LLC 1970 E 53rd Street Davenport IA 52807	16031	03/10/2006	IA	
Radiology Imaging Associates at Pembrooke 11325 Pembroke Square, Ste 116 Waldorf MD 20603	521454775	03/10/2006	MD	
New York MedScan 751 Second Avenue New York NY 10017	978701	03/10/2006	NY	
Rex Healthcare 4420 Lake Boone Trail Raleigh NC 27607	340114	03/10/2006	NC	
San Fernando Regional PET Center 6855 Noble Avenue Van Nays CA 91405	TP078	03/10/2006	CA	
PET/CT Imaging Center of Northwest Florida 5149 North 9th Avenue, Suite 124 Pensacola FL 32504	U4696	03/10/2006	FL	
Saint Joseph's Hospital - Nuclear Medicine 611 St. Joseph Avenue Marshfield WI 54449	520037	03/10/2006	WI	
Shared PET Imaging, LLC - Brooklyn NY 6300 Eigth Avenue Brooklyn NY 11220	97Z661	03/10/2006	NY	
SC Cancer Specialists 25 Hospital Center Boulevard. #301 Hilton Head IS SC 29926	1285633289	03/10/2006	SC	
Shared PET Imaging, LLC - Granger IN 6901 N Main Street Granger IN 46530	232800	03/10/2006	IN	
University Hospital – Cincinnati Eden Ave & Albert Sabin Way Cincinnati OH 45219	ID01511	03/10/2006	OH	
Shared PET Imaging, LLC - Marion OH 1050 Delaware Avenue Marion OH 43302	ID01511	03/10/2006	OH	
Shared PET Imaging, LLC - Terre Haute IN 3702 South Fourth Street Terre Haute IN 47802	201320	03/10/2006	IN	
South Jersey Radiology Associates, PA 100 Carnie Boulevard, Ste B5 Voorhees NJ 08043	S0429966	03/10/2006	NJ	
Southwest PET/CT Institute –Tucson 3503 N. Campbell, Ste 155 Tucson AZ 85719	1396736922	03/10/2006	AZ	
Southwest PET/CT Institute-Yuma 1951 W. 25th Street, Ste. G Yuma AZ 85364	106077	03/10/2006	AZ	
St. Francis Health Center 1700 SW 7th Street Topeka KS 66606	17-0016	03/10/2006	KS	
Southwoods PET Scan LLC 250 Debartolo Place, Bldg B Youngstown OH 44512	PCN05210036	03/10/2006	OH	
St. Louis PET Centers, LLC 12637 Olive Boulevard Creve Coeur MO 63376	1861470734	03/10/2006	MO	
St. Vincent's PET Center, LLC 2660 10th Avenue S, POBI Ste 104 Birmingham AL 35205	051555054	03/10/2006	AL	
Sun Molecular Imaging – Peoria 13090 N 94th Drive, #103 Peoria AZ 85381	71585	03/10/2006	AZ	
Sun Molecular Imaging - Sun City West 13909 W Camino Del Sol, #101 Sun City West AZ 85375	71585	03/10/2006	AZ	
Tarzana Advanced Imaging 5536 Reseda Boulevard Tarzana CA 91356	TP051A	03/10/2006	CA	
The Methodist Hospital PET Center 6565 Fannin Street, MBI – 066 Houston TX 77030	450358	03/10/2006	TX	
Texarkana PET Imaging Institute, LP 1929 Moores Lane Texarkana TX 75503	FTN008	03/10/2006	TX	
The PET/CT Center of North Florida 5742 Booth Road Jacksonville FL 32207	K7038P	03/10/2006	FL	
The Washington Hospital 155 Wilson Avenue Washington PA 15301	390042	03/10/2006	PA	
The PET/CT Scanning Center 235 18th Street, SE Hickory NC 28602	2881788	03/10/2006	NC	
Thompson Cancer Survival Ctr. PET Imaging Center 9711 Sherrill Boulevard Knoxville TN 37923	3791106	03/10/2006	TN	
Thunderbird MRI and PET Center 6591 W. Thunderbird Road, Ste A-1 Glendale AZ 85306	79467	03/10/2006	AZ	
Tower Imaging Roxsan 465 N Roxbury Drive, Ste 101 Beverly Hills CA 90210	TP114	03/10/2006	CA	
Tower Hematology Oncology Medical Group 9090 Wilshire Boulevard, Ste 200 Beverly Hills CA 90211	W11793	03/10/2006	CA	
TRA Medical Imaging 2202 S Cedar Street, Suite 200 Tacoma WA 98405	001055600	03/10/2006	WA	
Trident PET of Fayette 1275 Hwy 54 West, Ste 102 Fayetteville GA 30214	47BBBJJ	03/10/2006	GA	
Trident PET of Gwinnett 545 Old Norcross Road Lawrenceville GA 30045	47BBBGX	03/10/2006	GA	Suite 200
Trident PET of Savannah 7135 Hodgson Memorial Drive Savannah GA 31406	47BBBKP	03/10/2006	GA	Suite 10A
Tristan Associates 4520 Union Deposit Road Harrisburg PA 17111	112344	03/10/2006	PA	
Union Square Diagnostic Imaging 144 Fourth Avenue New York NY 10003	WR7502	03/10/2006	NY	
UCLA - Dept. of Molecular & Medical Pharmacology 10833 Le Conte Avenue Los Angeles CA 90095	HW13029	03/10/2006	CA	AR-115-CHS
UCLA - Dept. of Molecular & Medical Pharmacology 10833 Le Conte Avenue Los Angeles CA 90095	HW13029	03/10/2006	CA	AR-115-CHS
University Nuclear Medicine, Inc 105 Parker Hall Buffalo NY 14214	14414A	03/10/2006	NY	3435 Main St
University Radiology Group 75 Veronica Avenue, Ste 102 Somerset NJ 08873	425699	03/10/2006	NJ	
Anne Arundel Medical Center 2001 Medical Parkway Annapolis MD 21401	210023	03/10/2006	MD	
US Imaging Center Corp. LLC 842 Sunset Lake Boulevard, Ste 301 Venice FL 34292	U0331	03/10/2006	FL	
USC PET Imaging Science Center 1510 San Pablo Street, Ste 350 Los Angeles CA 90033	W11874	03/10/2006	CA	
Rolling Oaks Radiology 415 Rolling Oak Drive, Suite 160 Thousand Oaks CA 91361	W10746	03/10/2006	CA	
Vero Radiology Associates, Inc 777 37th Street, Ste A-103 Vero Beach FL 32960	97445	03/10/2006	FL	
Ventura Coast Imaging Center 4601 Telephone Road, Ste 101 Ventura CA 93003	W11335	03/10/2006	CA	
Washington Imaging Services, LLC 1135 - 116th Avenue, NE Bellevue WA 98004	GAB23386	03/10/2006	WA	
Washington Hospital Center 110 Irving Street, NW Washington DC 20010	090011	03/10/2006	DC	
Washoe Med Imaging Services at 75 Kirman 75 Kirman Avenue Reno NV 89502	WCHBB	03/10/2006	NV	
Wesley Long Hospital - Moses Cone Health System 501 North Elam Avenue Greensboro NC 27403	34-0091	03/10/2006	NC	
Westcoast Radiology 36463 US Hwy, 19 N. Palm Harbor FL 34684	E4187	03/10/2006	FL	
Providence Centralia Outpatient Radiology 4525 3RD Avenue SE Lacey WA 98503	50019	03/10/2006	WA	
Windber Medical Center 600 Somerset Avenue Winber PA 15963	390112	03/10/2006	PA	
Wyoming Valley PET Associates 190 Welles Street Forty Fort PA 18704	045012	03/10/2006	PA	
Youngstown Regional PET Scan 850 McKay Court Youngstown OH 44512	Y0ID0174	03/10/2006	OH	
X-RAY Associates at Santa Fe 490 A West Zia Road, Suite 130 Santa Fe NM 87505	2258263	03/10/2006	NM	

Facility Name	Provider Number	Date Approved	State	Other Information
Sibley Memorial Hospital 5255 Loughboro Road, NW Washington DC 20016	090005	03/10/2006	DC	
Lerman Diagnostic Imaging 6511 Fort Hamilton Parkway Brooklyn NY 11215	16H771	03/10/2006	NY	
XRC Medical Imaging 53940 Carmichael Drive South Bend IN 46635	187390	03/10/2006	IN	
St. Luke's Hospital 1026 A. Avenue N.E. Cedar Rapids IA 52406-3026	160045	03/10/2006	IA	P.O. Box 3026
University Imaging at Science Park 110 Science Parkway, Suite 100 Rochester NY 14620	16624A	03/10/2006	NY	
Kadlec Medical Center/Nuclear Medicine Dept. 945 Goethals Street Richland WA 99352	1972507580	03/10/2006	WA	
Central Georgia P.E.T., LLC 1650 Hardeman Avenue Macon GA 31201	47BBBKC	03/10/2006	GA	
PET/CT Imaging at Swedish Cancer Institute 1221 Madison Street, First Floor Seattle WA 98104	8857387	03/10/2006	WA	
National P.E.T. Scan Duval, LLC 425 North Lee Street Jacksonville FL 32204	E7348	03/10/2006	FL	
National P.E.T. Scan Pinellas, LLC 805 Executive Center Drive W St. Petersburg FL 33702	E7503	03/10/2006	FL	
National P.E.T. Scan Dade, LLC 7867 North Kendall Drive, Suite 121 Miami FL 33156	E5427	03/10/2006	FL	
National P.E.T. Scan Broward, LLC 6290 North Federal Highway Fort Lauderdale FL 33308	E5432	03/10/2006	FL	
Scottsdale Medical Imaging, Ltd. 7624 E. Indian School Road., Suite 109-1 Scottsdale AZ 85251	WCFKX	03/10/2006	AZ	
Lakes Regional General Hospital 80 Highland Street Laconia NH 03246	300005	03/10/2006	NH	
Northern California PET Imaging Center 3195 Folsom Boulevard Sacramento CA 95816	ZZZ15725Z	03/10/2006	CA	
Northern California PET Imaging Center – Mobile 3195 Folsom Boulevard Sacramento CA 95816	ZZZ25157Z	03/10/2006	CA	
Northern California PET Imaging Center – VAPA 3801 Miranda Avenue NA Palo Alto CA 94304	ZZZ21308Z	03/10/2006	CA	
Advanced Medical Imaging 3548 Route 9 South Old Bridge NJ 08857	595865	03/10/2006	NJ	
St. Vincent Infirmary Medical Center PET/CT Center, 2 St. Vincent Circle Little Rock AR 72205-5499	04-0007	03/10/2006	AR	
Lincoln Trail Diagnostics 1111 Woodland Drive Elizabethtown KY 42701	470001408	03/10/2006	KY	
LifeScan Imaging 607 Clifty Street Somerset NJ 42503	7614	03/10/2006	NJ	
St. John's Hos., Springfield Nuclear Medicine 1235 E. Cherokee Street Springfield MO 65804	26-0065	03/10/2006	MO	
City of Hope 1500 E. Duarte Road Duarte CA 91010	050146	03/10/2006	CA	Dept. of Nuclear Medicine
Hackettstown Regional Medical Center 651 Willow Grove Street Hackettstown NJ 07840	310115	03/10/2006	NJ	
Imaging Alliance - Nashville PET, LLC 52 White Bridge Road Nashville TN 37205	3791068	03/10/2006	TN	
Molecular Imaging of Bradenton 2301 60th St. Court West, Suite A Bradenton FL 34209	U1334	03/10/2006	FL	
Molecular Imaging of Charlotte County 4130 Tamiami Trail Port Charlotte FL 33952	U1934	03/10/2006	FL	
Imaging For Life 3830 Bee Ridge Road, Suite A Sarasota, FL	E6704	03/10/2006	FL	
Seattle Nuclear Medicine/Ultrasound Associates 1229 Madison Street, Suite 1050 Seattle WA 98104	G000158400	03/10/2006	WA	
Columbus Circle Imaging 1790 Broadway, 9th Floor New York, NY	W00691	03/10/2006	NY	
Bryn Mawr Imaging Center – Pet 100 Lancaster Avenue Wynnewood PA 19096	473120	03/10/2006	PA	
Beth Israel Deaconess Medical Center 330 Brookline Avenue Boston MA 02215	220086	03/10/2006	MA	
Boca Raton Community Hospital 800 Meadows Road Boca Raton Fl 33486	100168	03/10/2006	FL	
Centro Tomografico de PR, Inc. 1409 Ashford Avenue San Juan PR 00907	0087834	03/10/2006	PR	
Comprehensive Cancer Centers of Nevada 3730 S. Easton Avenue Las Vegas NV 89109	WCHCX	03/10/2006	NV	
Grossman Imaging Center of CMH 2151 E. Gonzales Road, Suite 101 Oxnard CA 93036	W17252	03/10/2006	CA	
Cookeville Regional Medical Center 142 W 5th Street Cookeville TN 38501	440059	03/10/2006	TN	
Instituto Central de Diagnostico, Inc. 1er. Floor Oncologic Hospital San Juan PR 00928	007835	03/10/2006	PR	PR Medical Center
Mercy Medical Center - Cedar Rapids 701 Tenth Street SE Cedar Rapids IA 52403	16-0079	03/10/2006	IA	
Midwest Radiologic Imaging – 1144217241 4087 Gateway Boulevard Newburgh IN 47630	1144217241	03/10/2006	IN	
Miami Valley Hospital 1 Wyoming Street Dayton OH 45409	360051	03/10/2006	OH	
Midwest Radiologic Imaging – 214790 4087 Gateway Boulevard Newburgh IN 47630	214790	03/10/2006	IN	
Midwest Regional PET/CT Center 6001 S. Sharon Avenue, Suite #2 Sioux Falls SD 57108	41406	03/10/2006	SD	
Mission Hospital, PET Center 222 Asheland Avenue Asheville NC 28801	3400002	03/10/2006	NC	
Mobile Molecular Imaging, LLC 100 Memorial Hosp Drive, Suite 1E Mobile AL 36608	1003804345	03/10/2006	AL	
Nebraska Health Imaging 7819 Dodge Street Omaha NE 68114	098975	03/13/2006	NE	
Montgomery Metabolic & Memory Imaging Center 7100 University Court Montgomery AL 36117	057554625	03/13/2006	AL	
Orange County Diagnostic Rad Inc. 17150 Euclid Street, Suite 101 Fountain Valley CA 92708	TD057	03/13/2006	CA	
Nothwest PET Imaging 265 N. Broadway Street Portland OR 97227	105512	03/13/2006	OR	
Nevada Cancer Institute Medical Group One Breakthrough Way, 10441 W. Twain Ave Las Vegas NV 89135	100505	03/13/2006	NV	
Positron Emission Tomography Institute at Hampton 5357 Henneman Drive Norfolk VA 23513	FVN001	03/13/2006	VA	
Positron Imaging Facility 1311 Record Crossing Road., Mail Code 9140 Dallas TX 75235	UT000F626	03/13/2006	TX	
Premier Diagnostic Imaging 10019 Forest Green Boulevard Louisville KY 40299	9375201	03/13/2006	KY	
Positron PET/CT of the Southern Tier 169 Riverside Drive Binghamton NY 13905	AA1047	03/13/2006	NY	
Radiology Regional Center, PA, Inc-Naples 700 Goodlette Road Naples FL 34102	77185	03/13/2006	FL	
Somascan Plaza, Inc. Suite 405 Torre de Plaza' Plaza Las Americas San Juan PR 00917	0089178	03/13/2006	PR	
Somascan, Inc. Jose Marti #56 San Juan PR 00917	0082435	03/13/2006	PR	
Southern Indiana Radiological Associates 500 Landmark Avenue Bloomington IN 47403	214160	03/13/2006	IN	
Southern Illinois Cancer Center 10286 Fleming Road Carterville IL 62918	643740	03/13/2006	IL	
South Nassau PET One Healthy Way Oceanside NY 11572	97z851	03/13/2003	NY	

Facility Name	Provider Number	Date Approved	State	Other Information
Southwest Diagnostic Center for Molecular Imaging 8440 Walnut Hill Lane, Suite 100 Dallas TX 75231	FTN-015	03/13/2006	TX	
St. Mary's Health Systems 900 E. Oakhill Avenue Knoxville TN 37917	440120	03/13/2006	TN	
Tower Diagnostic Center 4719 N. Habana Avenue Tampa FL 33614	00169	03/13/2003	FL	
Torrance Morial Medical Center 3330 Lomita Boulevard Torrance CA 90505	050351	03/13/2006	CA	
University of Colorado Hospital (AOP) 1635 N Ursula Street Aurora CO 80045	06-0024	03/13/2006	CO	
William Beaumont Hospital - Royal Oak 3601 West 13 Mile Road Royal Oak MI 48073-6769	23030	03/13/2006	MI	
Esther Quijoy Catalya, M.D. 3000 Oak Road #111 Walnut Creek CA 94597	00A449120	03/13/2006	CA	
Valley PET Institute 311 S Ham Lane Lodi CA 95242	00C283720	03/13/2006	CA	
Dan Ben-Zeev, M.D. 3000 Oak Road #111 Walnut Creek CA 94597	00G129831	03/13/2006	CA	
Midwest Center for Advanced Imaging 1307 Macom Drive Naperville IL 60564	L72461	03/13/2006	IL	
Crittenton Hospital Medical Center 1101 W University Drive Bochester MI	230054	03/13/2006	MI	
Medical Specialists of Palm Beaches. Inc. 5700 Lake Worth Road, Suite 204 Lake Worth FL 33463	33941A	03/13/2006	FL	
Pet Medical Imaging Center 3264 North Evergreen Drive Grand Rapids MI 49525	0P02650	03/13/2006	MI	
Radiology Regional Center, PA, Inc – RPET 6100 Winkler Road Suite A Fort Myers FL 33919	77185	03/13/2006	FL	
Good Samaritan Hospital 520 S 7th Street Vincennes IN 47591	150042	03/13/2006	IN	
Central Indiana Cancer Center 6845 Rama Drive Indianapolis IN 46219	065910	03/13/2006	IN	
Decatur PET Imaging 2774 W Decatur Road Decatur GA 30033	47BBBLP	03/13/2006	GA	
Community Memorial Hospital, Medical Imaging 855 S Main Street Oconto Falls WI 54154	00439MPN	03/13/2006	WI	
Olympic Radiology 2700 Clare Avenue Bremerton WA 98310	000242100	03/13/2006	WA	
Capitol Imaging 3161 L Street Sacramento CA 95816	1285615294	03/13/2006	CA	
National Medical Imaging - Bryn Mawr 574 W Lancaster Avenue Bryn Mawr PA 19010	024513	03/13/2006	PA	
National Medical Imaging – Langhorne 2 Doublewoods Road, Suite B Langhorne PA 19047	024513	03/13/2006	PA	
National Medical Imaging – Philadelphia 1903-05 South Broad Street Philadelphia PA 19148	024513	03/13/2006	PA	
University of VA Health System, Radiology 1215 Lee Street Charlottesville VA 22908	490009	03/13/2006	VA	
Florida Institute for advanced Diagnostic Imaging 9238 US 19 Port Richey FL 34668	59-3475930	03/13/2006	FL	
Roseville PET & Nuclear Medicine Imaging 2241 Douglas Boulevard#110 Roseville CA 95661	1194706689	03/13/2006	CA	
Memorial Sloan Kettering Cancer Center 1275 York Avenue New York NY 10021	330154	03/13/2006	NY	
Northeast PET Imaging Center 8400 Roosevelt Boulevard, Suite 208 Philadelphia PA 19152	083723	03/13/2006	PA	Medical Arts Center at Parte Ridge
UAMS PET Center 4301 West Markham Street Little Rock AR 72205	50528	03/13/2006	AR	
Joliet Oncology-Hematology Assoc., LTD 1600 W Rt 6 Morris IL 60450	205474	03/13/2006	IL	
Saint Luke's Hospital 4323 Wornall Road Kansas City MO 64111	26-0138	03/13/2006	MO	AH Peet Center
Mercy Medical Center 1320 Mercy Drive Canton OH 44708	360070	03/13/2006	OH	
Dayton Medical Imaging Center 7901 Schatz Pointe Drive Dayton OH 45459	US1D00231	03/13/2006	OH	
Community Radiology of Virginia 2000 Leatherwood Lane Bluefield VA 24605	FVA002	03/13/2006	VA	
Bab Radiology-Huntington 75 East Main Street Huntington NY 11743	W1L612	03/13/2006	NY	
Bab Radiology-Hauppauge 521 Route 111, Suite 312 Hauppauge NY 11788	W1L601	03/13/2006	NY	
Center for Diagnostic Imaging-37 5775 Wayzata Boulevard. #190 St. Louis Park MN 55416	470000037	03/13/2006	MN	
Center for Diagnostic Imaging St Louis Park MO 55416	C01307	03/13/2006	MO	
Center for Diagnostic Imaging - Mendota Heights 910 Sibley Memorial Highway Mendota Heights MN 55118	470000038	03/13/2006	MN	
Huntsville Hospital Imaging Center 1963 Memorial Parkway Huntsville AL 35801	010039	03/13/2006	AL	
Long Beach PET Imaging Center 2888 Long Beach Boulevard., Suite 110 Long Beach CA 90806	TG167	03/13/2006	CA	
Highway Imaging Associates, LLP 2095 Flatbush Avenue Brooklyn NY 11234	W10671	03/13/2006	NY	
St Vincent Hospital PO Box 13508 Green Bay WI 54307	520075	03/13/2006	WI	
Park South Imaging Center 6215 21st Avenue West#A Bradenton FL 34209	E1858	03/13/2006	FL	
Mary Bird Perkins Cancer Center 4950 Essen Lane Baton Rouge LA 70809	57290	03/13/2006	LA	
Boston Diagnostic Imaging 398 Altamonte Drive Altamonte Springs FL 32701	E3510	03/13/2006	FL	
Sioux Valley Hospital Medical Center 1305 W 18th Street Sioux Falls SD 57117	430027	03/13/2000	SD	
Indianapolis Regional PET Scan, LLC 3830 Shore Drive Indianapolis IN 46254	207260	03/13/2006	IN	
Mercy PET Center 300 Werner Lane Hot Springs, AR 71913	5C739	03/13/2006	AR	501-622-1943
Hinsdale PET Scan, LLC 812 Ogden Avenue Westmont IL 60559	206271	03/13/2006	IL	
Del Amo PET Imaging Center 3531 Fashion Way Torrance CA 90501	TP120	03/13/2006	CA	
North Shore PET Imaging Center 85 Herrick Street Beverly MA 1915	327110	03/13/2006	MA	Beverly Hospital
Robert D. Russo, & Associates Radiology, PC PO Box 6128 Bridgeport CT 06606	C02013	03/13/2006	CT	
Advanced Medical Specialties 9035 Sunset Drive, Suite 102 Miami, FL 33173	K7806	05/03/2006	FL	
Baptist M & S Imaging Center – Downtown 215 E. Quincy Suite 100 San Antonio, TX 78215	FTA078	05/03/2006	TX	
Community Cancer Center 545 W Umpqua Street Rosebury, OR 97470	R116571	05/03/2006	OR	
Baptist M & S Imaging Center 7888 Fredericksburg Road San Antonio, TX 78228	FTA078	05/03/2006	TX	
North Shore University Health System-Highland Park Hospital 757 Park Avenue West Highland Park, IL 60035	14-0010	05/03/2006	IL	
Grenada Diagnostic Radiology 1300 Sunset Drive, Suite U Grenada, MS 38901	470000034	05/03/2006	MS	

Facility Name	Provider Number	Date Approved	State	Other Information
Huntsman Cancer Hospital 2000 Circle of Hope, Suite 2121 Salt Lake City UT 84112-5550	460009	05/03/2006	UT	
High Tech Medical Park 11800 Southwest Highway Palos Heights, IL 60463	0703070	05/03/2006	IL	
Cyrus Diagnostic Imaging, Inc. 165 Waymont Court Lake Mary, FL 32746	40586	05/03/2006	FL	
Indiana Regional PET Imaging 7891 Broadway, Suite A Merrillville, IN 46410	229400	05/03/2006	IN	
Lancaster PET Imaging 2100 Harrisburg Pike Lancaster, PA 17601	054504	05/03/2006	PA	
James PET/CT Imaging Center 236 Doan Hall Columbus, OH 43210	360242	05/03/2006	OH	410 w. 10th Ave
Mary Lanning Memorial Hospital 715 N St Joseph Avenue Hastings, NE 68901	280032	05/03/2006	NE	
Maplewood Cancer Center-MOHPA 1580 Beam Avenue Maplewood, MN 55109	C01828	05/03/2006	MN	
Titusville Area Hospital 406 W Oak Street Titusville, PA 16354	390122	05/03/2006	PA	
Memorial Hospital 325 S Belmont Street York, PA 17403	390101	05/03/2006	PA	
Mercy Regional Health Center 1823 College Avenue Manahattan, KS 66502	17-0142	05/03/2006	KS	
Northshore Regional PET Scan, LLC 1464 Waukegan Road Glenview IL 60025	206272	05/03/2006	IL	
Northwest Indiana PET/CT Center 1505 S Calument Road, Ste 7 & 8 Chesterton, IN 46304	229810	05/03/2006	AL	
Parkway Ventures Inc. 9000 Franklin Square Drive Baltimore MD 21237	FMN002	05/03/2006	MD	Franklin Square Hospital
PET Fusion Imaging 3707 New Vision Drive Fort Wayne, IN 46845	190320	05/03/2006	IN	
River Oaks Imaging & Diagnostics P. O. Box 4346 Houston, TX 77210	FTA059	05/03/2006	TX	Dept 848
Regional PET Scan, LLC – Beachwood 2000 Auburn Road Beachwood OH 44122	REID02211	05/03/2006	OH	
Regional PET Scan, LLC – Fairview 20455 Lorain Road Fairview Park OH 44126	REID02211	05/03/2006	OH	
Regional PET Scan, LLC – Ridgepark 7575 Northcliff Avenue Brooklyn OH 44144	REID02211	05/03/2006	OH	
Saint Francis Hospital 114 Woodland Street Hartford , CT 06105	07-0002	05/03/2006	CT	
St Nicholas Hospital 3100 Superior Avenue Sheboygan, WI 53081	520044	05/03/2006	WI	
Swedish Medical Center 501 E Hampton Avenue Englewood, CO 80113	060034	05/03/2006	CO	
St Bernards PET Center 225 E Jackson Avenue Jonesboro, AR 72401	5C658	05/03/2006	AR	
Toledo Regional PET Scan, LLC 3442 Granite Circle Toledo OH 43617	T0ID01881	05/03/2006	OH	
University MRI 3848 F.A.U. Boulevard., Suite 200 Boca Raton, FL 33431	E1765	05/03/2006	FL	
Tucson PET Imaging 5355 E Erickson Drive Tucson, AZ 85712	WCBBM	05/03/2006	AZ	
Via Christi Oklahoma Regional Medical Center 1900 N 14th Street Ponca City, OK 74601	370006	05/03/2006	OK	
Christian Hospital 11133 Dunn Road St. Louis, MO 63136	260180	05/03/2006	MO	
DRA Imaging PC 1 Columbia Street Poughkeepsie, NY 12601	W18691	05/03/2006	NY	
Cleveland Clinic Star Imaging 921 Jasonway Avenue Columbus, OH 43214	34-1932969	05/03/2006	OH	
Norman PET Associates, LLC 3750 W Robinson, Suite 130 Norman, OK 73072	900522224	05/03/2006	OK	
Rhode Island PET Services - St Josephs 200 High Service Avenue N Providence, RI 02904	479003556	05/03/2006	RI	
Rhode Island PET Services - South County Hosp 100 Kenyon Avenue Wakefield, RI 02879	479003556	05/03/2006	RI	
Rhode Island PET Services - Roger Williams 825 Chalkstone Avenue Providence, RI 02908	479003556	05/03/2006	RI	
Rhode Island PET Services – Landmark 115 Cass Avenue Woonsocket, RI 02895	479003556	05/03/2006	RI	
Forest City Diagnosic Imaging 735 Perryville Road Rockford, IL 61107	546450	05/03/2006	IL	Lower Level 2
New England Molecular Imaging – York 15 Hospital Drive York, ME 03909	479003556	05/03/2006	ME	
Pavillion Imaging 750 Wellington Avenue Grand Junction, CO 81502	060023	05/03/2006	CO	
Lifescan Chicago 2242 W Harrison Street Chicago, IL 600612	470000014	05/03/2006	IL	
Southeast Medical Imaging 300 Evergreen Drive, Suite 210 Glen Mills, PA 19342	092801	05/03/2006	PA	
The Western Pennsylvania Hospital 4800 Friendship Avenue Pittsburgh, PA 15224	390090	05/03/2006	PA	
Southtowns PET/CT 550 Orchard Park Road West Seneca, NY 14224	14422A	05/03/2006	NY	
Main Street Radiology – Bayside 44-01 Francis Lewis Boulevard Bayside, NY 11361	04217	05/03/2006	NY	
Main Street Radiology – Bayside 44-01 Francis Lewis Boulevard Bayside, NY 11361	04217A	05/03/2006	NY	
West VA Univ Center for Advanced Imaging 1 Medical Center Drive Morgantown, WV 26506	9121131	05/03/2006	WV	PO Box 9236, Health Center South
Twin Lakes Medical Specialist PA 228 Bucher Drive Mountain Home, AR 72653	5B019	05/03/2006	AR	
Valley Metabolic Imaging, LLC 6121 N Thesta Street Suite 207 Fresno, CA 93710	ZZZ23150Z	05/03/2006	CA	Suite 207
Johnson City Medical Center 400 North State of Franklin Johnson City, TN 37642	440063	05/03/2006	TN	
St Louis University Hospital 3665 Vista Avenue St Louis, MO 63110	000050109	05/03/2006	MO	
Margaret R. Pardee Memorial Hospital 800 North Justice Street Hendersonville, NC 28791	340017A	05/03/2006	NC	
Valley Imaging Partnership 1401 W Merced Avenue #103 West Covina, CA 91790	TP035	05/03/2006	CA	
Sierra Imaging 155 Calle Portal Suite 500 Sierra Vista, AZ 85635	Z68496	05/03/2006	AZ	
Aspirus Wausau Hospital 333 Pine Ridge Boulevard Wausau, WI 54401	520030A	05/03/2006	WI	
Cancer Care Northwest Pet Center 910 W 5th Avenue Spokane, WA 99204	1922072081	05/03/2006	WA	Suite 130
PET/CT Imaging of North Texas 2900 North I-35 Denton, TX 76201	00888Y	05/03/2006	TX	Suite 119
Loyola University Health System 2160 S First Avenue Maywood, IL 60153	140276	05/03/2006	IL	
St Elizabeth Medical Center One Medical Village Drive Edgewood, KY 41017	180035	05/03/2006	KY	
Cleveland Clinic 9500 Euclid Avenue Cleveland, OH 44195	9925511	05/03/2006	OH	
Ingalls Family Care Center 6701 159th Street Tinley Park, IL 60477	14-0191	05/03/2006	IL	

Facility Name	Provider Number	Date Approved	State	Other Information
PET Fusion Center 4204 Houma Boulevard Metairie, LA 70006	5CB31	05/03/2006	LA	
United Regional Medical Center 1001 McArthur Drive Manchester, TN 37355	440007	05/03/2006	TN	
Joel Bernstein, MD 5395 Ruffin Road, Ste 202 San Diego, CA 92123	W18972	05/03/2006	CA	
Hasnat Ahmed, MD 5395 Ruffin Road, Ste 202 San Diego, CA 92123	W18370	05/03/2006	CA	
Meridian North Imaging Center 12188 N Meridian Street Carmel, IN 46280	026010	05/03/2006	IN	Suite 100
Cancer Center Oncology Med. Group 5395 Ruffin Road, Ste 202 San Diego, CA 92123	W12245A	05/06/2006	CA	
Firelands Regional Medical Center 1101 Decatur Street Sandusky, OH 44870	360025	05/03/2006	OH	
United Radiology – Greenbelt PO Box 34979 West Bethesda, MD 20827	FMN007	05/03/2006	MD	
Richard Just, MD 5395 Ruffin Road, Ste 202 San Diego, CA 92123	W16197	05/03/2006	CA	
Michael Kipper, MD 5395 Ruffin Road, Ste 202 San Diego, CA 92123	A24091	05/03/2006	CA	
McLaren Regional Medical Center 401 S. Ballenger Hwy Flint, MI 48532	230141	05/03/2006	MI	
United Radiology-Silver Spring PO Box 34979 West Bethesda, MD 20827	FMN007	05/03/2006	MD	
United Radiology-Rockville PO Box 34979 West Bethesda, MD 20827	FMN007	05/03/2006	MD	
St Mary's Health Center 6420 Clayton Road St Louis, MO 63117	260091	05/03/2006	MO	
Bay Regional Medical Center 1900 Columbus Avenue Bay City, MI 48708	230041	05/03/2006	MI	
Lapeer Regional Medical Center 1375 N. Main Street Lapeer, MI 48446	230193	05/03/2006	MI	
Scottsdale Medical Imaging, Ltd.-SW Diagnostics 9003 E. Shea Boulevard Scottsdale AZ 85260	1902896236	05/03/2006	AZ	
Valley Medical Oncology Consultants, Inc. 3000 Oak Road #111 Walnut Creek, CA 94597	ZZZ29659Z	05/03/2006	CA	
Northwest Community Hospital 800 W Central Road Arlington Heights, IL 60005	36-2340313	05/03/2006	IL	
PET Imaging of Dallas 8333 Douglas Avenue, C-20 Dallas, TX 75225	FTN017	05/03/2006	TX	
PET Imaging of Dallas – Northeast 1250 R Northwest Highway Garland, TX 75041	FTN028	05/03/2006	TX	
St Joseph's Regional Medical Center 703 Main Street Paterson, NJ 07503	310019	05/03/2006	NJ	
PET Imaging of Houston 2493-A South Braeswood Houston, TX 77030	FTN010	05/03/2006	TX	
Goshen General Hospital 200 High Park Avenue Goshen, IN 46526	150026	05/03/2006	IN	
PET Imaging of ELMC 8550 West 38th Avenue, Suite 102 Wheat Ridge, CO 80033	800665	05/03/2006	CO	
PET Imaging of Houston – Southeast 6021 Fairmont Parkway, Suite 120 Pasadena, TX 77505	FTN030	05/03/2006	TX	
Peninsula Imaging, LLC 1655 Woodbrooke Drive Salisbury, MD 21804	481L	05/03/2006	MD	
Zwanger –Pesiri 126 Hicksville Road Massapequa NY 11758	W13931	05/03/2006	NY	
Las Calinas PET Imaging, LLP 1110 Cottonwood Lane Irving, TX 75038	FTN019	05/03/2006	TX	Suite 220
Mt Carmel Regional Medical Center 1102 East Centennial Drive Pittsburg, KS 66762	014041	05/03/2006	KS	
Iowa Blood & Cancer Care, PLC 855 A. Avenue N.E. Cedar Rapids IA 52402	I6672	05/03/2006	IA	Medical Office Plaza, LL4
Hackensack University Medical Center 30 Prospect Avenue Hackensack, NJ 07601	310001	05/03/2006	NJ	
McLeod PET Imaging Center 800 East Cheves Street Florence, SC 29501	570370242001	05/03/2006	SC	Suite 170
St Alexius Medical Center 900 E Broadway Bismarck, ND 58506	35-0002	05/03/2006	ND	PO Box 5510
Center for Diagnostic Imaging 1295 Orange Avenue Winter Park, FL 32789	K0097	05/03/2006	FL	
Charleston Radiologists, PA 9313 Medical Plaza Drive Charleston, SC 29406	1709	05/03/2006	SC	Suite 302
PET Imaging of Houston - West 9525 Katy Freeway, Suite 102 Houston, TX 77024	FTN023	05/03/2006	TX	
University Hospitals of Cleveland 11100 Euclid Avenue Cleveland, OH 44106	36-0137	05/03/2006	OH	Mailstop BSHB5056
PET Imaging of Sugarland 17320 W Grand Parkway S., Suite A Sugar Land, TX 77479	FTN027	05/03/2006	TX	
PET Imaging of Oklahoma City 1000 N Lincoln Boulevard, Suite 250 Oklahoma City, OK 73104	800522283	05/03/2006	OK	
PET Imaging of Tulsa 6711 S Yale Avenue, Suite 104 Tulsa, OK 74136	400522320	05/03/2006	OK	
PET Imaging of The Woodlands 3091 College Park Drive, Suite 340 The Woodlands, TX 77384	FTN021	05/03/2006	TX	
Tarrant Diagnostic Imaging 1121 8th Avenue Fort Worth, TX 76104	FTN012	05/03/2006	TX	
Wyandot Memorial Hospital 85 North Sandusky, Avenue Upper Sandusky, OH 43351	361329	05/03/2006	OH	
Oregon Health & Science University 3181 SW Sam Jackson Park Road Portland, OR 97229	380009	05/03/2006	OR	
Saint John's Health System 2015 Jackson Street Anderson, IN 46016	150088	05/03/2006	IN	
Hudson Valley PET Imaging, LLC 160 North Midland Avenue Nyack, NY 10960	W1L903	05/03/2006	NY	
Kingston Diagnostic Center 167 Schwenk Drive Kingston, NY 12401	W1L921	05/03/2006	NY	
Appleton Medical Center 1818 N Meade Street Appleton, WI 54911	520160	05/03/2006	WI	
St Elizabeth Health Center 1044 Belmont Avenue Youngstown, OH 44501	360064	05/03/2006	OH	Dept of Research
Sinai Hospital of Baltimore 2401 West Belvedere Avenue Baltimore, MD 21215	210012	05/03/2006	MD	
Associates in Radiology of Plattsburgh, NY 762 Rt3, Suite 14 Plattsburgh, NY 12901	33572A	05/03/2006	NY	Airport Plaza
Affiliated PET Systems – Rockville 9711 Medical Center Drive Rockville, MD 20850	FDNX01	05/03/2006	MD	Suite 103
Lake Medical Imaging & Breast Center 1400 US Highway 441 North, Suite 510 The Villages, FL 32159	59-3522082	05/03/2006	FL	
Affiliated PET Systems - Silver Spring 1400 Forest Glen Road Silver Spring, MD 20910	FDNX01	05/03/2006	MD	Suite 430
North Texas Clinical PET Institute 3535 Worth Street, Suite 150 Dallas, TX 75246	99R339	05/03/2006	TX	
Lake Imaging Center 801 E Dixie Avenue, Suite 104 Leesburg, FL 34748	59-3635297	05/06/2006	FL	
Edwards Comprehensive Cancer Center 1400 Hal Greer Boulevard Huntington, WV 25701	510055	05/03/2006	WV	
Allison Cancer Center 301 North N Street Midland, TX 79701	140414744	05/03/2006	TX	
Clinical PET of Leesburg 8525 US Highway 441 Leesburg, FL 34748	E7179A	05/03/2006	FL	

Facility Name	Provider Number	Date Approved	State	Other Information
Greene Medical Imaging PC 159 Jefferson Hts., D-106 Catskill, NY 12414	W25021	05/03/2006	NY	
Caritas PET Imaging, LLC - Norwood Hospital 70 Walnut Street Foxboro MA 02035	32-7092	05/03/2006	MA	Caritas Norwood Hospital - Foxboro Campus
Caritas PET Imaging, LLC - New England Med Ctr 750 Washington Street Boston MA 02111	32-7092	05/03/2006	MA	Tufts - New England Medical Center
Austin, Radiological Assn - San Marcos 1348 B Hwy 123 South San Marcos, TX 78666	74-1597116	05/03/2006	TX	
ARA imaging - Rock Creek 2120 N Mays, #220 Round Rock, TX 78664	20-1651590	05/03/2006	TX	
ARA imaging – Southwood 1701 W Ben White Boulevard., #170 Austin, TX 78704	20-1651590	05/03/2006	TX	
Elkhart General Hospital 600 East Boulevard Elkhart, IN 46514	15-0018	05/03/2006	IN	
Austin, Radiological Assn – Midtown 1301 W 38th Street, Suite 100 Austin, TX 78705	74-1597116	05/03/2006	TX	
Caritas PET Imaging, LLC - St Elizabeth's 736 Cambridge Street Boston MA 2135	32-7092	05/03/2006	MA	St. Elizabeth's Medical Center
Global PET Imaging, LLC 1800 Hollister Drive, Suite G-10 Libertyville, IL 60048	309590	05/03/2006	IL	Grand Oaks Health Ctr
Caritas PET Imaging, LLC - Carney Hospital 2100 Dorchester Avenue Dorchester MA 2124	32-7092	05/03/2006	MA	Caritas Carney Hospital
Caritas PET Imaging, LLC - Milton Hospital 92 Highland Street, Milton, MA 02186	32-7092	05/03/2006	MA	
Caritas PET Imaging, LLC - St Anne's Hospital 795 Middle Street Fall River MA 2721	32-7087	05/03/2006	MA	St. Anne's Hospital
Caritas PET Imaging, LLC - Good Samaritan 235 North Pearl Street Brockton MA 2301	32-7087	05/03/2006	MA	Caritas Good Samaritan Medical Center
Panhandle PET Imaging 6700 W 9th Avenue Amarillo, TX 79106	TFN0007	05/03/2006	TX	
PET Imaging of San Francisco 1700 California Street, Ste 480 San Francisco, CA 94109	ZZZ-223-782	05/03/2006	CA	
PET/CT Imaging of Berkeley 2855 Telegraph Avenue, Ste 100 Berkeley, CA 94705	ZZZ-288-837	05/03/2006	CA	
Western Maryland Health System - Sacred Heart Campus 902 Seton Drive Cumberland, MD	210027	05/03/2006	MD	Western Maryland Health System-Sacred Heart Campus
Desert PET Imaging, LLC 1180 N Indian Cyn Drive Palm Springs, CA 92262	ZZZ28648Z	05/03/2006	CA	
First PET of Stockton 4744 Quail Lake Drive Stockton, CA 95207	00A484230	05/03/2006	CA	
Utah Cancer Specialist 3838 South 700 East Salt Lake City, UT 84106	57172	05/03/2006	UT	Suite 100
Washington Radiology Associates, PC 2121 K Street, NW Washington, DC 20006	WA409885	05/03/2006	DC	Ste T-120
New Rochelle Radiology Associates, PC 175 Memorial Highway New Rochelle, NY	W05571	05/03/2006	NY	
North Little Rock PET Associates, LLC 3500 Springhill Drive North Little Rock, AR 72117	5F437	05/03/2006	AR	Suite 100
Advanced Imaging Concepts, PL 13063 Cortez Boulevard Brooksville, FL 34613	94774	05/03/2006	FL	
Mansfield Imaging Center 536 S Trimble Road Mansfield, OH 44906	MAD10921	05/03/2006	OH	
West Tennessee Imaging Center 300 Coatsland Drive Jackson, TN 38305	44-0002	05/03/2006	TN	
Imaging Center of North Central Indiana, INC 2201 W Boulevard Kokomo, IN 46902	224110	05/03/2006	IN	
University of Kansas Hospital 3901 Rainbow Boulevard Kansas City, KS 66160	17-00040	05/03/2006	KS	Division of nuclear Medicine
PET Imaging of SWLA LLC 600 Bayou Pines East Lake Charles, LA 70601	5CK63	05/03/2006	LA	Suite A
Community Imaging Partners of Frederick 67 Thomas Johnson Drive Frederick, MD 21702	980M	05/03/2006	MD	
Community Imaging Partners of Olney 18111 Prince Phillip Drive # T-20 Olney MD 20832	409410	05/03/2006	MD	Community Imaging Partners
The West Clinic, PC 100 N. Humphreys Boulevard Memphis TN 38120	3704066	05/03/2006	TN	
Imaging Central LLC 7111 W Central Avenue Toledo, OH 43617	IMID01641	05/03/2006	OH	
Advanced Radiology-Fisher 193 Stoner Avenue Westminister, MD 21157	527L	05/03/2006	MD	
Advanced Radiology-Harford Imaging 104 Plumtree Road Bel Air, MD 21015	527L	05/03/2006	MD	Ste 106
Advanced Radiology-Cross Roads 4801 Dorsey Hall Road Ellicott City, MD 21042	527L	05/03/2006	MD	Ste 101
Advanced Radiology-PET Imaging of MD 1700 Reisterstown Road Baltimore, MD 21208	527L	05/03/2006	MD	Ste 119
Cancer & Blood Disease Center 521 No Lecanto Hwy Lecanto, FL 34461	72840	05/03/2006	FL	
Huntington Outpatient Imaging Center, INC 800 S Fairmount Avenue Pasadena, CA 91105	W1575B	05/03/2006	CA	Suite 120
Universal Imaging INC 4600 Investment Drive Troy, MI 48083	ON69130	05/03/2006	MI	
Berger Health System 1170 North Court Street Circleville OH 43113	360710	05/03/2006	OH	
Contemporary Imaging-Trenton 1676 Fort Street Trenton, MI 48183	0P23200	05/03/2006	MI	
South Tulsa PET, LLC 7712 S Yale Avenue Tulsa, OK 74136	800522360	05/03/2006	OK	Ste 100
Cancer Center of the Carolinas 200 Andrews Street Greenville, SC 29601	6526	05/03/2006	SC	Suite 100
OSF Saint Francis Medical Center 530 NE Glen Oak Avenue Peoria, IL 61637	14-0067	05/03/2006	IL	
Sacred Heart-St Mary's Hospitals INC 2251 Northshore Drive Rhinelander, WI 54501	1100700	05/03/2006	WI	
Capital Region Radiation Therapy & Imaging 3400 W Truman Boulevard Jefferson City, MO 65109	260047	05/03/2006	MO	PO 150832
University PET/CT Imaging 19 Bradhurst Avenue Hawthorne, NY 10532	W2Y371	05/03/2006	NY	Ste 1200
Aztech Radiology-Apache Trail 1840 W Apache Trail Apache Junction, AZ 85222	Z72398	05/03/2006	AZ	
Aztech Radiology-Casa Grande 1669 E McMurray Boulevard Casa Grande, AZ 85222	Z25341	05/03/2006	AZ	
Missouri Cancer Associates 105 N Keene Street Columbia, MO 65201	000012700	05/03/2006	MO	Ste 100
White River Medical Center 1710 Harrison Street Batesville, AR 72501	040119	05/03/2006	AR	
Englewood Hospital & Medical Center 350 Engle Street Englewood, NJ 07631	310045	05/03/2006	NJ	
Regional Imaging & Therapeutic Radiology Svcs 360 Bard Avenue Staten Island, NY 10310	1023095445	05/03/2006	NY	
Rocky Mountain Cancer Centers – South 7951 E Maplewood Avenue, Suite 300 Greenwood Village, CO 80111	204508	05/03/2006	CO	
Rocky Mountain Cancer Centers – North 7951 E Maplewood Avenue, Suite 300 Greenwood Village, CO 80111	204508	05/03/2006	CO	

Facility Name	Provider Number	Date Approved	State	Other Information
Molecular Imaging of Hamilton County-Bethesda 4197 Fulton Rd NW, Suite C Canton, OH 44718	MOID01221	05/03/2006	OH	
Molecular Imaging of Hamilton County-Good Som 4197 Fulton Road NW, Suite C Canton, OH 44718	MOID01221	05/03/2006	OH	
Kettering Medical Center 3535 Southern Boulevard Kettering, OH 45429	360079	05/03/2006	OH	
St Mary's Hospital 5801 Bremo Road Richmond, VA 23226	540793767	05/03/2006	VA	
Columbus Medical Institute of NY 97-85 Queens Boulevard Rego Park, NY 11374	05679	05/03/2006	NY	
Meadville Medical Center 1034 Grove Street Meadville, PA 16335	39-0113	05/03/2006	PA	
Chambersburg Hospital – Radiology 112 North Seventh Street Chambersburg, PA 17201	390151	05/03/2006	PA	
Oregon Advanced Imaging 881 O'Hare Parkway Medford, OR 97504	R114546	05/03/2006	OR	
Singing River Hospital 2809 Denny Avenue Pascagoula, MS 39581	250040	05/03/2006	MS	
East Texas Medical Center – Tyler 1000 S Beckham Avenue Tyler, TX 75701	4500833	05/03/2006	TX	
Columbia, St Mary's Hospital 2025 E Newport Avenue, Columbia, Campus Milwaukee, WI 53211	520051	05/03/2006	WI	
Sharon Regional Health System 740 East State Street Sharon, PA 16146	390211	05/03/2006	PA	
Northern Ohio Imaging Center 1900 West River Road Elyria, OH 44035	36-0172	05/03/2006	OH	
Oxford Valley Diagnostic Center 940 TownCenter Drive Langhorne, PA 19047	232745550	05/03/2006	PA	Suite F50>
The Emory Clinic 1365 Clifton Road, Bldg C, Rm CT 048 Atlanta , GA 30322	582030692	05/03/2006	GA	
Alegent Health Bergan Mercy Medical Center 7500 Mercy Road Omaha, NE 68124	280060	05/03/2006	NE	
University Center Imaging 1065 Delaware Avenue Marion, OH 43302	20-3873307	05/03/2006	OH	
Elk Regional Health Center 763 Johnsonburg Road St Mary's, PA 15857	39-0154	05/03/2006	PA	
Health Park Hospital 1636 Higdon Ferry Road Hot Springs, AR 71913	04-0142	05/03/2006	AR	
Johnsonburg Health Center 81 Clarion Road Johnsonburg, PA 15845	39-0104	05/03/2006	PA	
Jane Phillips Medical Center 3500 E Frank Phillips Boulevard Bartlesville, OK 74006	370015	05/03/2006	OK	
North Main Imaging Center 7650 First Place, Suite B Oakwood Village, OH 44146	NEID01521	05/03/2006	OH	
PET Imaging Center of Delaware County – DCMH 501 North Lansdowne Avenue Drexel Hill, PA 19026	390081	05/03/2006	PA	
NEO-PET CRC Imaging 7650 First Place, Suite B Oakwood Village, OH 44146	NEID01521	05/03/2006	OH	
PET Imaging Center of Delaware County – Springfield 190 West Sproul Road Springfield PA 19064	381080	05/03/2006	PA	
Harper University Hospital 3990 John R Street Detroit, MI 48201	230104	05/03/2006	MI	
Sinai-Grace Hospital 6071 W Outer Drive Detroit, MI 48235	23-0024	05/03/2006	MI	
Seattle Radiologists APC 1229 Madison Street Seattle, WA 98104	G0001589600	05/03/2006	WA	#900
Huron Valley-Sinai Hospital 1 William Carl Drive Commerce, MI 48382	23-0277	05/03/2006	MI	
East Memphis PET Imaging 6005 Park Avenue Memphis, TN 38119	3374526	05/03/2006	TN	Suite 101B>
UPMC-PET Imaging Facility 200 Lothrop Street Pittsburgh, PA 15213	390164	05/03/2006	PA	9th Floor B-wing PUH
UPMC-PET Imaging Facility 300 Halket Street Pittsburgh PA 15213	390114	05/03/2006	PA	
Rhode Island Hospital 593 Eddy Street Providence, RI 02903	05-025-8954	05/03/2006	RI	
David C. Pratt Cancer Center 607 South New Bulbs Road St Louis, MO 63141	260020	05/03/2006	MO	
Lewistown Hospital 400 Highland Avenue Lewistown PA 17044	390048	05/03/2006	PA	
Lawrence Memorial Hospital 325 Maine Street Lawrence, KS 66044	170137	05/03/2006	KS	
Jameson Hospital 1211 Wilmington Avenue New Castle, PA 16105	39-0016	05/03/2006	PA	
Diagnostic Clinic of Houston 1200 Binz Street Houston, TX 77004	76-0203506	05/03/2006	TX	
Arlington Heights Radiology Center, LLC 121 South Wilke Road Arlington Heights, IL 60005	212301	05/03/2006	IL	
Oregon Imaging Center 1200 Hilyard Street Eugene, OR 97401	R0000WCPGH	05/03/2006	OR	#330
Arlington Heights Radiology Center, LLC 121 South Wilke Road Arlington Heights, IL 60005	212301	05/03/2006	IL	
Indiana Univ Radiology Assoc PET Imaging Center 950 W Walnut Street, Room E124 Indianapolis, IN 46202	959090	05/03/2006	IN	
Morristown Memorial Hospital 100 Madison Avenue Morristown, NJ 07962	310015	05/03/2006	NJ	
Baton Rouge Radiology Group 5422 Dijon Drive Baton Rouge, LA 70808	5B039	05/03/2006	LA	
North Texas PET Imaging Denton, TX 76210	752131429	05/03/2006	TX	
Children's Hospital of Michigan Pet Center 3901 Beaubien Boulevard Detroit, MI 48201	23-3300	05/03/2006	MI	
Winchester Medical Center 1840 Amherst Street Winchester, VA 22601	490005	05/03/2006	VA	
Decatur Health Imaging, LLC 1123 16th Avenue SE Decatur AL 35601	051555161	05/03/2006	AL	
Health Imaging Services, LLC 1760 Warnke Circle NE Cullman AL 35058	051553273HEA	05/03/2006	AL	
PET/CT Imaging of the Mainline 21 Industrial Boulevard., Suite 103 Paoli, PA 19301	097715	05/03/2006	PA	
PET Imaging of Brevard 1430 Pine Street Melbourne, FL 32901	39254	05/03/2006	FL	
North Carolina Baptist Hospital Medical Center Boulevard Winston Salem, NC 27157	34-0047	05/03/2006	NC	
St Francis Hospital 34515 9th Avenue S Federal Way, WA 98003	500108	05/03/2006	WA	
Saint Barnabas Outpatient Center 200 S Orange Avenue Livingston, NJ 07039	440149	05/03/2006	NJ	
PET/CT Imaging of Ramapa Radiology 972 Route 45, Suite 106 Pomona, NY 10970	W21711	05/03/2006	NY	
Medical University of South Carolina PET/CT 169 Ashley Avenue Charleston, SC 29425	420004	05/03/2006	SC	
Akron General medical Center 300 Wabash Avenue Akron, OH 44307	36-0027	05/03/2006	OH	
New England Molecular Imaging - Mercy Hospital 144 State Road Portland, ME 04103	NE327075	05/03/2006	ME	
New England Molecular Imaging - Penobscot Bay 6 Glenn Cove Drive Rockport, ME 04856	NE327076	05/03/2006	ME	

Facility Name	Provider Number	Date Approved	State	Other Information
Center for Outpatient Services - St Joseph 3900 Hollywood Road St Joseph, MI 49085	23-0021	05/03/2006	MI	
New England Molecular Imaging - Central Maine 12 High Street Lewiston, ME 04240	NE327076	05/03/2006	ME	
Imaging Consultants Inc – Berkshire 8 Conte Drive Pittsfield, MA 01210	327085	05/03/2006	MA	
Imaging Consultants Inc - Boston Medical 840 Harrison Avenue Boston, MA 02118	327083	05/03/2006	MA	
Imaging Consultants Inc - Boston PET One Brookline, Place Brookline, MA 02445	327083	05/03/2006	MA	
Baptist Memorial Hospital PET Center 6027 Walnut Grove Road Memphis TN 38120	44-0048	05/03/2006	TN	
Norman Regional Hospital 701 E Robinson Street Norman, OK 73071	1614	05/03/2006	OK	
Ann G Fetters Diagnostic Imaging Center 2151 N Harbor Boulevard Fullerton, CA 92835	050168	05/03/2006	CA	
Pitt County Memorial Hospital 2100 Stantonsburg Road Greenville, NC 27835	56-0585243	05/03/2006	NC	
Inland Imaging, LLC 105 W 8th Avenue Spokane, WA 99202	AB01749	05/03/2006	WA	Suite 100C
University of Chicago Hospitals 5758 S. Maryland Avenue Chicago IL 60637	140088	05/03/2006	IL	Room # 0150
Birch Medical Imaging Center 20162 S.W. Birch Street Newport Beach, CA 92660	W19353	05/03/2006	CA	
Tennessee Oncology PET Services 2018 Murphy Avenue Nashville, TN 37203	3709319	05/03/2006	TN	Ste 200
Tennessee PET Scan 1020 N Highland Avenue Murfreesboro, TN 37130	3791187	05/03/2006	TN	Ste A
Texas Oncology - Harris Center HEB 1615 Hospital Pkwy Bedford, TX 76022	00R66C	05/03/2006	TX	Suite 300
Greater Dayton Cancer Center 3120 Governor's Place Boulevard Kettering, OH 45409	9295791	05/03/2006	OH	
Martha Jefferson Hospital 459 Locust Avenue Charlottesville, VA 22902	490077	05/03/2006	VA	
Modern Diagnostic Imaging 600 S Dobson Road Chandler, AZ 85224	107628	05/03/2006	AZ	Suite B-16
Christiana Care Nuclear Medicine/PET 4755 Ogletown-Stanton Road Newark, DE 19718	080001	05/03/2006	DE	
Advanced Imaging of Port Charlotte LLC 2625 Tamiami Trail Port Charlotte, FL 33952	K6802	05/03/2006	FL	Suite 1
St Joseph's Diagnostic Center-MLK 3003 Martin Luther King, Jr Boulevard Tampa, FL 33067	97779	05/03/2006	FL	
South Carolina Oncology Associates 166 Stoneridge Drive Columbia, SC 29210	6275	05/03/2006	SC	
South Carolina Oncology Associates 166 Stoneridge Drive Columbia, SC 29210	6276	05/03/2006	SC	
Access Health Imaging 5257 Hwy 82, East Lake Village, AR 71653	5M809	05/03/2006	AR	
PET/CT Services of Florida - Beverly Hills 3404 N Lecanto Highway Beverly Hills, FL 34465	V0103	05/03/2006	FL	Beverly Hills Medical Park
PET/CT Services of Florida –Ocala 1541 SW 1st Avenue Ocala, FL 34474	V0103	05/03/2006	FL	Suite 101B
Blanchard Valley Regional Health Center 145 W Wallace Street Findlay, OH 45840	360095	05/03/2006	OH	
Papastavros Associates Medical Imaging 1701 Augustine Cut-Off Wilmington, DE 19803	1083615561	05/03/2006	DE	
PET Imaging of Willowbrook 13300 Hargrave Road Houston, TX 77070	FTN032	05/03/2006	TX	Suite 130
PET Imaging of Northern Colorado 1915 Wilmington Drive Ft Collins, CO 80528	804621	05/03/2006	CO	Suite 101
Temecula Valley Advanced Imaging 25395 Hancock Avenue Murrieta, CA 92592	ZZZ-150752	05/03/2006	CA	Suite 110
Saint Anthony Memorial Health Center 301 West Homer Street Michigan City, IN 46360	A150015	05/03/2006	IN	
Salina Regional Health Center 400 S Santa Fe Avenue Salina, KS 67401	170012	05/03/2006	KS	P.O. Box 5080
Cancer Center of Kansas 818 N Emporia Street Wichita, KS 67214	110217	05/03/2006	KS	Ste 100
Clinton Crossings Imaging 995 Senator Keating Boulevard Rochester, NY 14618	14439A	05/03/2006	NY	
NSMS - Shelby County 4253 Argosy Court Madison, WI 53714	I16068	05/03/2006	WI	
Verrazano Radiology, PC 256A Mason Avenue Staten Island, NY 10305	200011201	05/03/2006	NY	
Imaging Consultants Inc - Brockton Hospital 680 Centre Street Brockton, MA 02301	327085	05/03/2006	MA	
Imaging Consultants Inc - Cape Cod 252 Long Pond Drive Harwich, MA 2645	327085	05/03/2006	MA	Fontain Medical Center
Imaging Consultants Inc – Falmouth 100 Ter Hewn Drive Falmouth, MA 02540	327085	05/03/2006	MA	
Imaging Consultants Inc – Jordan 275 Sandwich Street Plymouth, MA 02360	327085	05/03/2006	MA	
Imaging Consultants Inc – Holyoke 575 Beech Street Holyoke, MA 01040	327085	05/03/2006	MA	
Imaging Consultants Inc - Mercy Medical 271 Carew Street Springfield, MA 01089	327085	05/03/2006	MA	
Imaging Consultants Inc - Lawrence Memorial 170 Governors Avenue Medford, MA 02155	327083	05/03/2006	MA	
Imaging Consultants Inc - Metro West 115 Lincoln Street Framingham MA 1701	327083	05/03/2006	MA	
Imaging Consultants Inc – Milford 14 Prospect Street Milford, MA 01757	327085	05/03/2006	MA	
Imaging Consultants Inc – Quincy 114 Whitwell Street Quincy, MA 02196	327083	05/03/2006	MA	
Imaging Consultants Inc - Saints Memorial 2 Hospital Drive Lowell, MA 01852	327083	05/03/2006	MA	
Imaging Consultants Inc – Truesdale 1030 Presidents Avenue Fall River, MA 02720	327085	05/03/2006	MA	
Imaging Consultants Inc - Twin City 76 Summer Street Fitenburg, MA 01420	N/A	05/03/2006	MA	
Imaging Consultants Inc – Worcester 20 Worcester Cntr Boulevard Worcester, MA 01608	327085	05/03/2006	MA	
Sentara Mobile PET/CT – Careplex 5900 Lake Wright Drive, Suite B Norfolk, VA 23502	250605	05/04/2006	VA	
Sentara Mobile PET/CT - Lake Wright 5900 Lake Wright Drive, Suite B Norfolk, VA 23502	250605	05/04/2006	VA	
Sentara Mobile PET/CT - Princess Anne 5900 Lake Wright Drive, Suite B Norfolk, VA 23502	250605	05/04/2006	VA	
Sentara Mobile PET/CT – Williamsburg 5900 Lake Wright Drive, Suite B Norfolk, VA 23502	250605	05/04/2006	VA	
Memorial Hospital of South Bend 615 N Michigan Street South Bend, IN 46601	150058	05/04/2006	IN	
NSMS-Belleville, IL 4253 Argosy Court Madison, WI 53714	208196	05/04/2006	WI	
NSMS-Flora, IL 4253 Argosy Court Madison, WI 53714	208196	05/04/2006	IL	
NSMS-Breese, IL 4253 Argosy Court Madison, WI 53714	208196	05/04/2006	IL	
SSM DePaul Health Center 12303 DePaul Drive St Louis, MO 63044	260104	05/04/2006	MO	

Facility Name	Provider Number	Date Approved	State	Other Information
Lutheran Hospital 7950 W Jefferson Boulevard Fort Wayne IN 46804	150017	05/11/2006	IN	
Memorial MRI and Diagnostic 1346 Campbell Road Houston TX 77055	00941U	05/11/2006	TX	
Cape Cod PET/CT Services LLC 55 Fogg Road Weymouth MA 2190	0010594	05/11/2006	MA	
Baystate MRI and Imaging Center 3300 Main Street Springfield MA 1107	327039	05/11/2006	MA	
Advanced Imaging Center 16110 Jog Road, 200 Delray Beach FL 33446	U2049	05/11/2006	FL	
UMASS Memorial MRI and Imaging Center 214 Shrewsburg Street Worcester MA 1604	327040	05/11/2006	MA	
RCOA Imaging Services 1108 Minnequa Avenue Pueblo CO 81004	475748	05/11/2006	CO	
Adventist Health PET/CT – Hanford 450 N Greenfield Avenue Hanford CA 93230	ZZZ318852	05/11/2006	CA	
Adventist Health PET/CT - Feather River 5974 Pertz Road Paradise CA 95969	ZZZ318852	05/11/2006	CA	
Adventist Health PET/CT – Sonora 1000 Greenley Road Sonora CA 95370	ZZZ318852	05/11/2006	CA	
Sarasota Memorial PET 5350 University Parkway Sarasota FL 34238	U1775	05/11/2006	FL	
Adventist Health PET/CT – Redbud 18th Ave at Hwy 53, P.O. Box 6710 Clear Lake CA 95422	ZZZ318852	05/11/2006	CA	
Adventist Health PET/CT - ST Helena 10 Woodland Road St Helena CA 94574	ZZZ318852	05/11/2006	CA	
Adventist Health PET/CT – Ukiah 275 Hospital Drive Ukiah CA 95482	ZZZ318852	05/11/2006	CA	
Mease Outpatient Imaging 1840 Mease Drive Safety Harbor FL 34685	100265	05/11/2006	FL	
Bardmoor Outpatient Center 8787 Bryan Dairy Road Largo FL 33777	00594C	05/11/2006	FL	
Trinity Outpatient Center 2102 Trinity Oaks Boulevard New Port Richey FL 34655	00594D	05/11/2006	FL	
Walnut Creek Imaging Center 114 la Casa Via, #200 Walnut Creek CA 94598	ZZZ13902Z	05/11/2006	CA	
Carlisle Imaging Center 1240 S Ft Harrison Avenue Clearwater FL 33756	594	05/11/2006	FL	
Valley Radiology Imaging at Samaritan 2581 Samaridan Drive, #100 San Jose CA 95124	ZZZ139851Z	05/11/2006	CA	
Forest Hills PET Imaging 102-02 Queens Boulevard Forest Hills NY 11375	06998G	05/11/2006	NY	
Roper PET/CT Center 316 Calhoun Street Charleston SC 29401	Q326280001	05/11/2006	SC	
Premier PET Imaging of NJ 119 Cherry Hill Road Parsippany NJ 7054	68433	05/11/2006	NJ	Suite 100
Methodist Medical Center of Illinois 221 NE Glen Oak Avenue Peoria IL 61636	370661223	05/11/2006	IL	
Medical Imaging of Baltimore 6715 N. Charles Street Baltimore MD 21204	258L	05/12/2006	MD	
Yagnesh Oza, MD 4117 Velerous Memorial Drive Mt Vernon IL 62864	212702	05/12/2006	IL	
Moffitt Cancer Center 12902 Magnolia Drive Tampa FL 33612	100271	05/12/2006	FL	
PrimeMed Imaging 5 Morgan Highway Suite 7 Scranton PA 18505	260	05/12/2006	PA	Morgan Medical Complex
Rockville PET Imaging, P.C 119 North Park Avenue Rockville Centre NY 11570	WTC601	05/12/2006	NY	Suite 101
Porter Adventist Hospital 2525 South Downing Street Denver CO 80210	60064	05/12/2006	CO	
Rapid City Regional Hospital Medical Imaging Serv 353 Fairmont Boulevard Rapid City SD 57701	43007	05/12/2006	SD	
Advanced Radiolgy Consultants 56 Quarry Road Trumbull CT 6611	C02747	05/12/2006	CT	
Northeastern PA Imaging Center 2601 Stafford Avenue Scranton PA 18505-0305	475385	05/12/2006	PA	PO BOX 3305
Billings MRI Center 1041 North 29th. Street Billings MT 59101-1075	81030	05/12/2006	MT	
Aurora St. Luke's Medical Center 2900 W. Oklahoma Avenue Milwaukee WI 53215	520138	05/12/2006	WI	Nuclear Medicine Dept
Memorial & St. Elizabeth's Healthcare Services, LL 4000 N. Illinois Lane Swansea IL 62226	201339	05/12/2006	IL	PET/CT Imaging Center
Palm Beach Cancer Institute – West Palm Beach 1309 North Flagler Drive West Palm Beach, FL 33401-2710	34754	05/12/2006	FL	
Overlook Hospital 99 Beauvoir Avenue Summit NJ 7902	8772966189	05/12/2006	NJ	
Ashland Bellefonte Cancer Center 122 Saint Christopher Drive Ashland KY 41101	2150	05/12/2006	KY	
Bryn Mawr Imaging Center 101 S Bryn Mawr Avenue Bryn Mawr PA 19010	473120	05/12/2006	PA	
Oncology Alliance 1055 N. Mayfair Road, Ste 100 Wauwatosa WI 53220	32836000	05/12/2006	WI	
Shared PET Maimonides 6300 Eighth Ave Brooklyn NY 11220	97Z661	05/12/2006	NY	
Hoboken Radiology, LLC 79 Hudson Street, Ste 100 Hoboken NJ 07030	80395	05/12/2006	NJ	
Akron City Hospital 525 E Main Street Akron OH 44309	360020	05/12/2006	OH	
Park Avenue Radiologists, P.C. 525 Park Avenue New York NY 10021-1513	W21771	05/12/2006	NY	
Comprehensive Blood & Cancer Center 6501 Truxtun Avenue Bakersfield CA 93309	zzz238732	05/12/2006	CA	
Rome Imaging Center 309 West 10th Street Rome GA 30165	GRP1221	05/12/2006	GA	
Hawaii PET Imaging 2230 Liliha Street Honolulu HI 96817	54537	05/12/2006	HI	
Imaging Consultants Inc @ Henry Heywood Hospital 242 Green Street Gardner MA 01440	327085	05/12/2006	MA	
Imaging Consultants Inc @ Nashoba Valley Medical C 200 Groton School Road Ayer MA 01432	327085	05/12/2006	MA	
Rhode Island Pet Services @ Memorial Hospital 111 Brewster Street Pawtucket RI 02860	479003556	05/12/2006	RI	
Osceola Cancer Center 737 W. Oak Street Kissimmee FL 34741	1629034202	05/12/2006	FL	
Valley Radiologists Ltd. - Paseo II Office 5605 W. Eugie Avenue Ste 110 Glendale AZ 85304	1902896236	06/13/2006	AZ	
Southeast GYN, oncology PET 5210 Belfort Road. Suite 130 Jacksonville FL 32256	45542	06/13/2006	FL	
The Johns Hopkins PET Center 600 N. Wolfe Street Baltimore MD 21287	210009	06/13/2006	MD	Nelson Basement
Maklansky, Grunter, Kurzban, Cohen, ZImmer, Hyman 165 East 84th Street New York NY 10028	W20393	06/13/2006	NY	
Methodist Medical Center of Illinois 112 Crescent Avenue Peoria IL 61636	370661223	06/13/2006	IL	
Phoebe Putney Memorial Hospital 417 Third Avenue/P.O Box 1828 Albany GA 31702-1828	110007	06/13/2006	GA	
Eiber Radiology/Pet Premier Imaging 21 West 49 Street Hialeah FL 33012	k3166	06/13/2006	FL	

Facility Name	Provider Number	Date Approved	State	Other Information
Botsford Hospital 28050 Grand River Avenue Farmington Hills MI 48336	230151	06/13/2006	MI	
Middletown Regional Hospital 105 McKnight Drive Middletown OH 45044	360076	06/13/2006	OH	
Waukesha Memorial Hospital 725 American Avenue Waukesha WI 53188	390910727	06/13/2006	WI	
Battle Creek Health System 300 North Avenue Battle Creek MI 49016	230075	06/13/2006	MI	
Orlando Regional Medical Center 1414 Kuhl Avenue Orlando FL 32806	100006	06/13/2006	FL	
NorthEast Medical Center 1065 NorthEast Gateway Court NE Concord NC 28025	340001	06/13/2006	NC	
Premier Medical Imaging 7651 Stagers Loop Delaware OH 43015	9912921	06/13/2006	OH	
Advanced Radiolgy Consultants 15 Corporate Drive Trumbull CT 6611	C02747	06/13/2006	CT	
Advance Pet Imaging 23 Technology Drive East Setauket NY 11733	46a401	06/13/2006	NY	
Premier PET Imaging of Wichita 500 S. Main Street, Suite B Wichita KS 67202	110682	06/13/2006	KS	
Health Center Northwest 320 Sunnyview Lane Kalispell MT 59901	270087	06/13/2006	MT	
Olympic Medical Center 844 N. 5th Avenue Sequim WA 98382	500072	06/13/2006	WA	
Premier PET Imaging of Jacksonville 5210 Belfort Road, Ste 130 Jacksonville FL 32256	K3166	06/13/2006	FL	
Pet/Ct Imaging of San Jose 2211 Moorpark Avenue, Ste. 220 San Jose CA 95128	ZZZ19866Z	06/13/2006	CA	
The Reading Hospital and Medical Center 6th and Spruce Streets West Reading PA 19611	390044	06/13/2006	PA	
Julia Rackley Perry Memorial Hospital 530 Park Avenue. East Princeton IL 61356	141337	06/13/2006	IL	
Ashland Bellefonte Cancer Center 122 Saint Christopher Drive Ashland KY 41101	2150	06/13/2006	KY	
Tower Imaging BBD 14231 Bruce B Down Boulevard Tampa FL 33613	169	06/13/2006	FL	
VyMed Diagnostic Imaging Tampa, LLC 10010 N. Dale Mabry Highway Suite 160 Tampa FL 33618	U4068	06/13/2006	FL	
Texas Oncology Cancer Center Sugar Land 1350 First Colony Boulevard Sugar Land TX 77479	00073F	06/13/2006	TX	
Samaritan North Health Center 9000 N. Main Street Dayton OH 45415	360052	06/13/2006	OH	
The PET Center of Oxford 1612 US Highway 78 East, Suite 102 Oxford AL 36203	51554888	06/13/2006	AL	
Shared PET Mem Lighthouse 6901 N Main Street Granger IN 46530	232800	06/13/2006	IN	
Shared PET Hope Cancer Ctr 3702 South Fourth Street Terre Haute IN 47802	201320	06/13/2006	IN	
Athens Regional Medical Center 1199 Prince Avenue Athens GA 30606	110074	06/13/2006	GA	
Muskogee PET & Nuclear Imaging 3300 Chandler Road. Ste #106 Muskogee OK 74403	400522529	06/13/2006	OK	
Lubbock Imaging Center 4011 19th Street Lubbock TX 79410	00027K	06/13/2006	TX	
Memorial Medical Center 701 N. First Street Springfield IL 62781	140148	06/13/2006	IL	
Hamamatsu/Queen's Pet Imaging Center 1301 Punchbowl Street Honolulu HI 96813	N49041701	06/13/2006	HI	
Aurora BayCare Medical Center 2845 Greenbrier Road Green Bay WI 54308	520193	06/13/2006	WI	
Medical Center of Plano 3901 W. 15th Street Plano TX 75002	450651	06/13/2006	TX	
Carolinas Medical Center 1000 Blythe Boulevard Charlotte NC 28203	340113	06/13/2006	NC	
Redwood Regional Medical Group dba Santa Rosa Radi 121 Sotoyome Street Santa Rosa CA 95405	680344865	06/13/2006	CA	
Boone Hospital Center 1600 East Broadway Columbia MO 65201	260068	06/13/2006	MO	
River Radiology 45 Pine Grove Avenue Kingston NY 12401	W30681	06/13/2006	NY	
University of Washington Medical Center 1959 NE Pacific Street Seattle WA 98195	142700	06/13/2006	WA	
Mid American Imaging-Salem 1987 E. 4th Street Salem OH 44460	ID00804	06/13/2006	OH	
Piedmont Medical Center 222 S. Herlong Avenue Rock Hill SC 29732	420002	06/13/2006	SC	
Alliance Imaging-Sparks 1311 South I Street Fort Smith AR 72817	5F463	06/13/2006	AR	
Radiology Imaging Associates 1825 SE Tiffany Ave Suite 104 Port St Lucie FL 34952	52	06/13/2006	FL	
Mount Sinai Medical Center One Gustave L Levy Place New York NY 10029	H23620	06/13/2006	NY	
NSMS-Ottawa, IL 4253 Argosy Court Madison WI 53714	208196	06/13/2006	WI	
Center For Diagnostic Imaging 1550 E Chestnut Avenue Vineland, NJ 08360	53290	06/13/2006	NJ	Bldg 4 Suite A
St Mary Mercy Hosp Livonia 36475 Five Mile Road Livonia MI 48154	230002	06/13/2006	MI	
Harold Leever Regional Cancer 1075 Chase Parkway Waterbury CT 6708	470000025	06/13/2006	CT	
Kentucky Metabolic Imaging 2425 Regency Road Suite B Lexington KY 40503	9366001	06/13/2006	KY	
Western Baptist Hospital 2501 Kentucky Avenue Paducah KY 42001	180104	06/13/2006	KY	
St. Anthony Regional Hospital 311 South Clark Street Box 628 Carroll IA 51401	1720067127	06/13/2006	IA	
Alliance Imaging-Sequoia Hospital 170 Alameda de las Pulgas Redwood City CA 94062	ZZZ28890Z	06/13/2006	CA	
CarolinaEast Medical Center 2000 Neuse Boulevard New Bern NC 28560	340131	06/13/2006	NC	
Alliance Imaging-Tri City Med Ctr 4002 Vista Way Oceanside CA 92056	TG281C	06/13/2006	CA	
Alliance Imaging-Yavapai Del Webb Outpatient Center Prescott Valley AZ 86314	76103	06/13/2006	AZ	3262 Windsong Dr.
Saint Vincents Comprehensive Cancer Center 325 West 15th Street New York, NY 10011	330290	06/13/2006	NY	
Alliance Imaging-Southwest Medical Imaging 3104 Stockton Hill Road Kingman, AZ 76103	06/13/2006	AZ		
Alliance Imaging-North Idaho Imaging 700 Ironwood Drive Coeur d'Alene ID 93814	1790291	06/13/2006	ID	
Froedtert Hospital 9200 W Wisconsin Avenue Milwaukee, WI	520177	06/13/2006	WI	
Alliance Imaging-Flagstaff Medical Center 1200 N. Beaver Street Flagstaff AZ 86001	71855	06/13/2006	AZ	
South Florida Oncology and Hematology Consultants 4850 W. Oakland Park Boulevard Lauderdale Lakes, FL 33313	33873	06/13/2006	FL	Suite A
Alliance Imaging-Sierra Vista 300 El Camino Real Sierra Vista AZ 85635	71855	06/13/2006	AZ	
Alliance Imaging-St. Joseph Eureka 2700 Dolbeer Street Eureka CA 95501	zzz23046z	06/13/2006	CA	

Facility Name	Provider Number	Date Approved	State	Other Information
Alliance Imaging-Corvallis Clinic 3680 NW Samaritan Drive Corvallis OR 97330	132104	06/13/2006	OR	
Bridgeport Hospital 267 Grant Street Bridgeport, CT 06610	70010	06/13/2006	CT	
Valley Radiologists Ltd. - Paseo II Office 5605 W. Eugie Avenue Glendale, AZ 85304	1902896236	06/13/2006	AZ	Suite 110
Central Texas Medical Center 1301 Wonder World Drive San Marcos, TX 78666	450272	06/13/2006	TX	
Alliance Imaging-Verde Valley Med Ctr 269 S. Candy Lane Cottonwood AZ 86326	76103	06/13/2006	AZ	
Alliance Imaging-Union Hosp Cecil 106 Bow Street Elkton MD 21821	FMN008	06/13/2006	MD	
St. Joseph Mercy Hospital - Ann Arbor 5301 E Huron River Road Ann Arbor, MI 48106	230156	06/13/2006	MI	
Alliance Imaging-Navapache 2200 E. Show Low Lake Road Show Low AZ 85901	76103	06/13/2006	AZ	
St. Clare Medical Center 1710 Lafayette Road Crawfordsville, IN 17933	150022	06/13/2006	IN	
Boynton Beach EFL Imaging Center ,LLC 2300 S Congress Avenue Boynton Beach, FL	272376000	06/13/2006	FL	# 105
Aurora Medical Center Oshkosh 855 N. Westhaven Drive Oshkosh, WI 54904	590198	06/13/2006	WI	
Southeast GYN, Oncology PET 5210 Belfort Road Jacksonville, FL 32256	45542	06/13/2006	FL	Suite 130
Stockton MRI & Molecular Imaging Medica 2320 N. California Street #2 Stockton, CA 95219	ZZZ290872	06/13/2006	CA	
South Texas Cancer Center 2150 N Expressway 83 Brownsville, TX 78521	14041756	06/13/2006	TX	
Southwest Cancer Care Medical Group 5395 Ruffin Road San Diego, CA 92123	W4957B	06/13/2006	CA	#202
Radiology Associates of Venice and Englewood, P.A. 512-516 S. Nokomis Avenue Venice, FL 34285	99390	06/13/2006	FL	
Langlade Memorial Hospital Oncology 112 E 5th Avenue Antigo, WI 54409	521350	06/13/2006	WI	
RCOA Imaging Services 305 South 5th Street Enid, OK 73701	400522301	06/13/2006	OK	
North Shore Hematology Oncology Associates PC 235 N. Belle Mead Road East Setauket, NY 11733	W04051	06/13/2006	NY	
Providence Holy Cross Imaging Center 26357 McBean Pkwy Suite 155 Santa Clarita CA 91355	TP129	06/13/2006	CA	
Alaska Open Imaging Center, LLC 6911 DeBarr Road Anchorage, AK 99504	K153149	06/13/2006	AK	
Temecula Valley Nuclear Medicine 25485 Medical Center Drive Murrieta, CA 92562	00A417170	06/13/2006	CA	Suite 102
Hematology Oncology Assoc. of the Treasure Coast 1801 SE Hillmoor Drive Port Saint Lucie, FL 34952	40806	06/13/2006	FL	Suite B-107(Mobile)
The Center for Cancer and Blood Disorders 800 W. Magnolia Avenue Fort Worth, TX 76104	00L79L	06/13/2006	TX	
Alliance Imaging-South Coast Med Ctr 31872 Pacific Coast Hwy Laguna Beach CA 92651	TG281B	06/13/2006	CA	
The Medical Center at Bowling Green 250 Park Street Bowling Green KY 42101	180013	06/13/2006	KY	PET/CT Center
Johns Hopkins Bayview Medical Center 4940 Eastern Avenue Baltimore, MD 21224	210029	06/13/2006	MD	Imaging Department-Nuc Med
University of Michigan, Department of Radiology 1500 E. Medical Center Drive Ann Arbor MI 48109	230046	06/13/2006	MI	Box 0028, B1H418 University Hospital
Carmichael Imaging, LLC 4147 Carmichael Road Montgomery AL 36106	51551742	06/13/2006	AL	
Clearfield Hospital 809 TurnPike Avenue Clearfield, PA 16830	390052	06/13/2006	PA	
Clinical Pet of Hernando 4003 Mariner Boulevard Spring Hill FL 34609	V2683	06/13/2006	FL	
Booth Radiology 105 Kings Way W Hurffville-Crosskeys Road Sewell, NJ 08080	39460	06/13/2006	NJ	
Clinical PET of Zepherhills 38044 Daughtery Road Zephyr Hills FL 33542	E7179B	06/13/2006	FL	
RDI/OMHS Springs 2200 East Parrish Avenue Owensboro KY 42303	180038	06/13/2006	KY	Building D
Santa Monica Bay Physicians 12524 W. Washington Boulevard Los Angeles, CA 90066	W14560	06/13/2006	CA	
Missouri Baptist Medical Center 3023 N. Ballas Road St. Louis, MO 63141	260108	06/13/2006	MO	Suite 150, Building D
Radiology Associates of Tallahassee, P.A.1600 Phillips Road Tallahassee, FL 32308	60	06/13/2006	FL	
Pacific Imaging – Oakland 3200 Telegraph Avenue Oakland, CA 94609	1265480099	06/13/2006	CA	
Medical Group of North County 5395 Ruffin Road #202 San Diego, CA 92123	W11609	06/13/2006	CA	#202
Somerset Community Hospital Somerset, PA 15501	390039	06/13/2006	PA	
Elmbrook Memorial Hospital 19333 W. North Avenue Brookfield WI 53045	520170	06/13/2006	WI	
San Luis Diagnostic Medical Associates 1100 Monerery Street San Luis Obispo CA 93401	W14221	06/13/2006	CA	Suite 210
Cancer Care Centers of S.Texas,P.A.(New Braunfels) 1448 Common Street New Braunfels TX 78130	00U40Q	06/13/2006	TX	
Cancer Care Centers of S.Texas,P.A.(San Antonio) 8109 Fredericksburg Road San Antonio TX 78229	00U40Q	06/13/2006	TX	
Cancer Care Centers of S.Texas,P.A.(Kerrville) 694 Hill Country Drive Kerrville TX 78028	00U40Q	06/13/2006	TX	
San Antonio Molecular Imaging SAMI 9102 Floyd Curl Drive San Antonio TX 78240	FTN025	06/13/2006	TX	Suite 193
Pacific Medical Imaging and Oncology Center, Inc. 707 South Garfield Avenue Alhambra, CA 91801	W19267	06/13/2006	CA	Suite B-001
Northern IL Cancer Tx Center 327 IL Rt 2 Dixon IL 61021	210699	06/13/2006	IL	
Cancer Care Center 2210 Green Valley Road New Albany, IN 47150	243690	06/13/2006	IN	Suite 1
Northeast Radiology 3839 Danbury Road Brewster NY 10509	1134118607	06/13/2006	NY	
New England PET Imaging System 70 East Street Methuen MA 1844	M20762	06/13/2006	MA	
Southeast Texas PET Imaging 690 North 14th Street Beaumont TX 77702	0004CC	06/13/2006	TX	
Sun City West PET Scan 14418 W. Meeker Boulevard Sun City West, AZ 85374	102496	06/13/2006	AZ	Suite 105
Butler Memorial Hospital 911 East Brady Street Butler PA 16001	390168	06/13/2006	PA	
Diagnos, Inc. DBA Diagnos PET/CT Imaging 2000 North Loop West Houston TX 77018	ftnx11	06/13/2006	TX	Suite 100
Alliance Imaging-Washington Hospital 38950 Civic Center Drive Fremont CA 94538	ZZZ28890Z	06/13/2006	CA	
Providence Saint Joseph Hospital 201 S Buena Vista Burbank, CA 91505	50235	06/13/2006	CA	#125
Alliance Imaging-Centinela Freeman 333 Prairie Avenue Inglewood, CA	TG281	06/13/2006	CA	
Alliance Imaging-Corona Reg Hospital 800 S. Main Street Corona CA 91720	ZZZ23042Z	06/14/2006	CA	

Facility Name	Provider Number	Date Approved	State	Other Information
Alliance Imaging Reno 235 W. 6th Street Reno NV 89503	37860	06/14/2006	NV	235 W. 6th Street
Alliance Imaging-Downey Reg Med Ctr 11500 Brookshire Avenue Downey CA 90241	TG490	06/14/2006	CA	
Alliance Imaging-Visalia Med Clinic 5400 W. Hillsdale Drive Visalia CA 93291	ZZZ23046Z	06/14/2006	CA	
Alliance Imaging-Anaheim Memorial Med Ctr 1111 W. La Palma Avenue Anaheim CA 92801	TD017C	06/14/2006	CA	Anaheim Memorial Medical Center
Glendale Diagnostic Imaging Network Medical Office 403 South Glendale Avenue Glendale CA 91205	W19100	06/14/2006	CA	
Advanced Imaging at Baybrook 11 Murray Street Glens Falls NY 12801	33554a	06/14/2006	NY	
Elizabethtown Hematology-Oncology PLC 1107 Woodland Drive Elizabethtown KY 42701	3638	06/14/2006	KY	Suite 105
Northern Arizona Radiology 77 W Forest Avenue Ste 101 Flagstaff AZ 86001	WCGJX	06/14/2006	AZ	
Suburban Imaging - Coon Rapids 8990 Springbrook Drive, Ste 140 Coon Rapids MN 55433	3087	06/14/2006	MN	
Covenant Medical Center 200 East Ridgeway Avenue Waterloo IA 50702	421264647	06/14/2006	IA	
Mayo Clinic Rochester 10, 3rd Avenue NW Rochester MN 55905	1922074434	06/14/2006	MN	Charlton Building
Thousand Oaks Diagnostic Imaging Center 2180 Lynn Road Thousand Oaks CA 91360	TP118	06/14/2006	CA	
InnerVision Advanced Medical Imaging 3801 Amelia Avenue Lafayette IN 47905	167840	06/14/2006	IN	
UT M. D. Anderson Cancer Center - PET Facility 1220 Holcombe Boulevard Houston TX 77030	450076	06/14/2006	TX	ACB 6th Floor
Emory University Hospital 1364 Clifton Road, NE Atlanta GA 30322	110010	06/14/2006	GA	Rm. E121, Nuclear Med/PET
Glendale MRI Institute 624 S. Central Avenue Glendale CA 91204	HW9951	06/14/2006	CA	
Princeton Radiology 9 Centre Drive Jamesburg NJ 08831	526492	06/14/2006	NJ	
Caromont Imaging Services 620 Summit Crossing Place Gastonia NC 28054	340032	06/14/2006	NC	Suite 106
North Central Imaging 155 Sonterra Boulevard, Suite 100 San Antonia, TX 78258	00867N	06/14/2006	TX	
Robert L. B. Tobin Diagnostic Imaging Center 7979 Wurzbach Drive, Suite U113 San Antonio TX 78229	00867N	06/14/2006	TX	
Edwards Comprehensive Cancer Center 1400 Hal Greer Boulevard, Huntington WV 25701	510055	06/14/2006	WV	
Home Hospital GLHS Lafayette IN 47904	150109	06/14/2006	IN	
St. Luke's North Pet 153 Brodhead Road Bethlehem PA 18017	390049	06/14/2006	PA	
Alamance Regional Medical Center 1240 Huffman Mill Road Burlington NC 27216-0202	340070	06/14/2006	NC	P.O. Box 202
Verrazano Radiology 256 Mason Avenue Staten island NY 10305	1698	06/14/2006	NY	
Total Imaging Sun City 3862 Sun City Center Sun City Center FL 33571	U4840	06/14/2006	FL	
Ortonville Area Health Services 450 Eastvold Avenue Ortonville MN 56278	241342	06/14/2006	MN	
Sky Lakes Medical Center 2865 Daggett Avenue Klamath Falls OR 97601	380050	06/14/2006	OR	
Elite Imaging, LLC 2845 Aventura Boulevard Aventura FL 33180	K3535	06/14/2006	FL	Suite 145
St Mary Centralia 400 N Pleasant Avenue Centralia IL 62801	140034	06/14/2006	IL	
North Texas Regional Cancer Center 3705 W 15th Street Plano TX 75075	00543K	06/14/2006	TX	
Centegra Health System 4201 Medical Center Drive McHenry IL 60050	140116	06/14/2006	IL	
Boston Diagnostic Imaging 398 East Altamonte Drive Altamonte Springs FL 32701	77022	06/14/2006	FL	
William W. Backus Hospital 326 Washington Street Norwich CT 6360	70024	06/14/2006	CT	
NSMS - Sparta, IL 4253 Argosy Court Madison WI 53714	208196	06/14/2006	WI	
LaPorte Hospital & Healthcare Services 1007 Lincolnway LaPorte IN 46350	150006	06/14/2006	IN	
Skagit Valley Hospital 1415 E. Kincaid Street Mt.Vernon WA 98273	500003	06/14/2006	WA	
Alliance Imaging-Fairfield Hospital 303 NW 11th Street Fairfield IL 62837	213393	06/14/2006	IL	
Anderson Hospital 6800 State Rte 162 Maryville IL 62062	212761	06/14/2006	IL	
Alliance Imaging-Dean 1313 Fish Hatchery Road Madison WI 53715	92170	06/14/2006	WI	
Alliance Imaging-Research 2316 E. Meyer Boulevard Kansas City MO 64112	9004263A	06/14/2006	MO	
Alliance Imaging-St. Joseph 1000 Carondelet Drive Kansas City MO 64114	9004263A	06/14/2006	MO	
Beebe Health Campus dba Beebe Medical Center 18941 John J Williams Highway Rehoboth DE 19971	80007	06/14/2006	DE	
Medical Outsourcing Services LLC 1200 Maple Road Joliet, IL 60432	211223	06/14/2006	IL	
Silver Spring Radiology 10801 Lockwood Drive Silver Spring, MD 20901	FDX009	06/14/2006	MD	Suite 170
New England PET of Greater Lowell 295 Varnum Avenue Lowell, MA 01854	327080	06/14/2006	MA	
Stanford University 900A Blake Wilbur Drive Stanford, CA 94305	50441	06/14/2006	CA	
Medical Outsourcing Services LLC 3333 W Deyoung Street Marion, IL 62959	211224	06/14/2006	IL	
Medical Outsourcing Services LLC 1700 Clinton Street Muskegon, MI 49443	230066	06/14/2006	MI	
Medical Outsourcing Services LLC 1001 Bellefontaine Avenue Lima, OH 45807	MEID02391	06/14/2006	OH	
Golf Diagnostic Imaging Center 9680 Golf Road Des Plaines, IL 60016	378810	06/14/2006	IL	
Medical Outsourcing Services LLC 2816 South Ellis Avenue Chicago, IL 60616	211222	06/14/2006	IL	
Medical Outsourcing Services LLC 1100 E. Norris Drive Ottawa, IL 61350	211224	06/14/2006	IL	
Medical Outsourcing Services LLC 111 E Spring Street Streator, IL 61364	211224	06/14/2006	IL	
Mansfield Imaging Center 536 S Trimble Road Mansfield, OH 44906	MAD10921	06/14/2006	OH	Suite A
Manhattan Diagnostic Radiology 400 East 66th Street New York NY 10021	W23211	06/14/2006	NY	
Riverside Walter Reed Hospital 7519 Hospital Drive Gloucester VA 23061	490130	06/14/2006	VA	
Good Shepherd Hospital 450 West Highway 22 Barrington IL 60010	140291	06/14/2006	IL	

Facility Name	Provider Number	Date Approved	State	Other Information
Alliance Imaging-Presbyterian Intercomm Hospital 12401 Washingotn Boulevard Whittier CA 90602	TG281A	06/14/2006	CA	Presbyterian Intercommunity Hospital
Altru Hospital 1200 S. Columbia Road Grand Forks ND 58201	350019	06/14/2006	ND	
Mid American Imaging-Union Hospital 659 Boulevard Dover OH 44622	ID00805	06/14/2006	OH	
Gundersen Clinic 1900 South Avenue Lacrosse WI 54601	34217	06/14/2006	WI	
University of Minnesota Medical Center, Fairview 500 Harvard Street SE, Box 292 Minneapolis MN 55455	C02390	06/14/2006	MN	
The Christ Hospital 2139 Auburn Avenue Cinncinati OH 45219	360163	06/14/2006	OH	
West Michigan Cancer Center 200 N Park Street Kalamazoo MI 49007	0N66660	06/14/2006	MI	
Cyrus Diagnostic Imaging,INC. 165 Waymont Court Lake Mary FL 32746	40586	06/14/2006	FL	
Cancer Centers of Florida 1561 West Fairbanks Avenue Winter Park FL 32789	K1833	06/14/2006	FL	
Cedars-Sinai Medical Center 8700 Beverly Boulevard., Adler-Nail PET Center Los Angeles, CA 90048	951644600	06/14/2006	CA	S. Mark Taper Foundation Imaging Center
Cancer Centers of Florida 52 West Gore Street Orlando FL 32806	K1833	06/14/2006	FL	
Cancer Centers of Florida 1111 Blackwood Avenue Ocoee FL 34761	K1833	06/14/2006	FL	
Mt. Clemens Regional Medical Center 1000 Harrington Street Mt. Clemens, MI 48043	230227	06/14/2006	MI	
Truxtun Radiology Medical Group, L.P. 1818 16th Street Bakersfield, CA 93301	ZZZ25213Z	06/14/2006	CA	
Medical Outsourcing Services LLC 1515 North Madison Avenue Anderson IN 46011	223260	06/14/2006	IN	
Medical Outsourcing Services LLC 1215 Franciscan Drive Litchfield IL 62056	211224	06/14/2006	IL	
Piedmont Medical Center 1968 Peachtree Road. N.W. Atlanta GA 30305	110083	06/14/2006	GA	
Medical Outsourcing Services LLC 1400 West Park Street Urbana IL 61801	211224	06/14/2006	IL	
Central Indiana PET, LLC 8301 Harcourt Road Suite 100 Indianapolis IN 46260	201930	06/14/2006	IN	
Medical Outsourcing Services LLC 812 North Logan Avenue Danville IL 61832	211224	06/14/2006	IL	
Queens Medical Imaging, PC 69-15 Austin Street Forest Hills, NY 11375	1023011285	06/14/2006	NY	
NYOH PET/CT Imaging 43 New Scotland Avenue Albany NY 12208	56917A	06/14/2006	NY	
Conroe Regional Medical Center 504 Medical Center Boulevard Conroe, TX 77304	450222	06/14/2006	TX	
Northeast Georgia Health System, Inc. 743 Spring Street Northeast Gainesville, GA 30501	110029	06/14/2006	GA	
Texas Oncology PA-Mckinney 4510 Medical Center Drive Mckinney, TX 75069	00543K	06/14/2006	TX	#215
Medical Outsourcing Services LLC 7150 Clearwater Drive Indianapolis IN 46256	223260	06/14/2006	IN	
Medical Outsourcing Services LLC 1402 East County Line Road Indianapolis IN 46227	223260	06/14/2006	IN	
Texas Cancer Center –Sherman 2800 Hwy 75 North Sherman, TX 75090	00543K	06/14/2006	TX	
Medical Outsourcing Services LLC 120 Ralston Avenue Defiance, OH 43512	MEID02391	06/14/2006	OH	
Medical Outsourcing Services LLC 2400 N Rockton Avenue Rockford, IL 61103	211224	06/14/2006	IL	
Arlington Cancer Center 906 W. Randol Mill Road Arlington, TX 76012	00LK20	06/14/2006	TX	
Jupiter Medical Center 2055 Military Trail Jupiter, FL 33458	100253	06/14/2006	FL	
Cheyenne Radiology Group and MRI, PC 2003 Bluegrass Circle Cheyenne, WY 82009	W309142	06/14/2006	WY	
Hunterdon Imaging, P.A. 100 Wescott Drive, MRI Suite Flemington, NJ 08822	714119	06/14/2006	NJ	
Medical Outsourcing Services LLC 200 Berteau Avenue Elmhurst, IL 60126	211223	06/14/2006	IL	
Magnolia Regional Center 611 Alcorn Drive Corinth, MS 38834	250009	06/14/2006	MS	
Monroe Clinic 515 22nd Avenue Monroe, WI 53566	520028	06/14/2006	WI	
Jupiter Hematology-Oncology Assoc. 345 Jupiter Lakes Boulevard Jupiter, FL 33458	34922	06/14/2006	FL	Ste.100
Southwest Regional Cancer Center 901 West 38th Street Austin, TX 78705	0080BY	06/14/2006	TX	
Positron Imaging Of Austin 6101 Balcones Drive Austin, TX 78731	00538K	06/14/2006	TX	
So. Ocean County Hospital 1140 Route 72 West Manahawkin, NJ 08050	310113	06/14/2006	NJ	Radiology
Medical Outsourcing Services LLC 9830 S Ridgeland Road Chicago Ridge, IL 60145	211222	06/14/2006	IL	
Medical Outsourcing Services LLC 430 West Votaw Street Portland, IN 47374	223260	06/14/2006	IN	
Saint Agnes Medical Center 1303 E. Herndon Avenue Fresno, CA 93720	50093	06/14/2006	CA	
Central Physicians Imaging 100 Southland Drive Lexington, KY 40503	9375001	06/14/2006	KY	Suite B
NEA Medical Center AR 72401	1386699353	06/14/2006	AR	
Northgate Medical Imaging, LLC 807 Northgate Boulevard New Albany, IN 47150	1205894235	06/14/2006	IN	
Ball Memorial Hospital 2401 University Avenue Muncie, IN 47303	150089	06/14/2006	IN	
The MRI Center 5200 Harroun Road Sylvania, OH 43560	360074	06/14/2006	OH	Flower Hospital
St. Joseph Regional Health Center 2801 Franciscan Drive Bryan, TX 77802	450011	06/14/2006	TX	
Steinberg Diagnostic (SDMI) 2850 Siena Heights Henderson, NV 89052	WCHCC	06/14/2006	NV	
Raritan Bay Medical Center 1 Hospital Plaza Old Bridge, NJ 08857	310039	06/14/2006	NJ	
MRI CTR St. Anne Mercy Hospital 3404 W Sylvania Avenue Toledo, OH 43623	360262	06/14/2006	OH	
MRI CTR St. Charles Mercy Hospital 2600 Navarre Avenue Oregon, OH 43616	360081	06/14/2006	OH	
MRI CTR St. Luke's Hospital 2901 Monclova Road Maumee, OH 43537	360090	06/14/2006	OH	
MRI CTR St Vincent Medical Ctr 2213 Cherry Street Toledo, OH 43608	360112	06/14/2006	OH	
MRI CTR Toledo Hospital 2142 N Cove Boulevard Toledo, OH 43606	360068	06/14/2006	OH	
McAlester Regional Health Center One Clark Bass Boulevard McAlester, OK 74501	370034	06/14/2006	OK	

Facility Name	Provider Number	Date Approved	State	Other Information
MedCentral Express Imaging 335 Glessner Avenue Mansfield, Oh, 44903	36-0118	06/14/2006	OH	Suite A
Mercy Regional Medical Center 375 East Park Avenue Durango, CO 81301	60013	06/14/2006	CO	
Texas Oncology - Longview Cancer Center PET TX 75601	00T35E	06/14/2006	TX	
UNC Hospitals 101 Manning Drive Chapel Hill, NC 27514	3400610	06/14/2006	NC	PET Dept. Basement W/C Hospital
DeKalb Medical Center - Diagnostic Imaging Center 2701 North Decatur Road Decatur, GA 30033	110076	06/14/2006	GA	
Long Island Pet Imaging 6 Ohio Drive Lake Success, NY 11042	W4921	06/14/2006	NY	Suite 101
Vanderbilt University Medical Center 1161 21st Avenue South	3284867	06/14/2006	TN	Bldg 1251 RRB
Medical Outsourcing Services LLC 1800 E. Lakeshore Drive Decatur, IL 62521	211224	06/14/2006	IL	
New York Pet and CTA Imaging Center 7404 5th Avenue Brooklyn, NY 11209	1083680003	06/14/2006	NY	
Mercy Medical Center-North Iowa 1000 4th Street SW Mason CIity, IA 50401	160064	06/14/2006	IA	
Lawrence & Memorial Hospital 365 Motauk Avenue New London, CT 06320	70007	06/14/2006	CT	
Superior Medical Diagnostics II, LLC 235 Franklin Avenue Nutley, NJ 07110	68423	06/14/2006	NJ	
Oncology Specialists, S.C. 7900 N. Milwaukee Avenue Niles, IL 60714	587940	06/14/2006	IL	Suite 16
Hahnemann University Hospital Broad & Vine, MS300 Philadelphia, PA 19102	390290	06/14/2006	PA	
Shrewsbury Diagnostic Imaging, LLC 1131 Broad Street Shrewsbury, NJ 07702	24021	06/14/2006	NJ	Suite 110
Medical Outsourcing Services LLC 500 West Court Street Kankakee IL 60901	211224	06/14/2006	IL	
Forsyth Medical Center 3333 Silas Creek Parkway Winston Salem NC 27103	3400014	06/14/2006	NC	
Medical Outsourcing Services LLC 500 John Deere Road Moline IL 61265	211224	06/14/2006	IL	
Medical Outsourcing Services LLC 836 W. Wellington Avenue Chicago IL 60657	211222	06/14/2006	IL	
Medical Outsourcing Services LLC 1600 West Walnut Street Jacksonville IL 62650	211224	06/14/2006	IL	
Medical Outsourcing Services LLC 1600 23rd Street Bedford IN 47471	223260	06/14/2006	IN	
Medical Outsourcing Services LLC 1500 North Ritter Avenue Indianapolis IN 46219	223260	06/14/2006	IN	
Medical Outsourcing Services LLC 1221 N Highland Avenue Aurora IL 60506	211223	06/14/2006	IL	
Medical Outsourcing Services LLC 1000 Lincoln Health Center Drive Mattoon IL 61938	211224	06/14/2006	IL	
Salinas Valley Memorial Healthcare System 450 E. Romie Lane Salinas CA 93901	50334	06/14/2006	CA	
Bridgeport Hospital 267 Grant Street Bridgeport CT 6610	70010	06/14/2006	CT	
MRIGP, Inc dba Advanced Medical Imaging Diamond Hill 2490 W 26th Avenue Suite 20A Denver CO 80211	H8808	06/14/2006	CO	
RCHO Pet Imaging 5120 Belfort Boulevard. Ste. 130 Jacksonville FL 32256	40259	06/14/2006	FL	
Presbyterian Hospital 200 Hawthorne Lane Charlotte NC 28204	560554230	06/14/2006	NC	
Eisenhower Imaging Center 39000 Bob Hope Drive Rancho Mirage CA 92210	ZZZ91572Z	06/14/2006	CA	Lower Level Lucy Curci Cancer Center
Mississippi Baptist Medical Center 501 Marshall Street Jackson MS 39202	250102	06/14/2006	MS	
Texas Oncology - South Texas Cancer Center 2121 Pease Street, Ste 101Harlingen TX 78550	14041756	06/14/2006	TX	Texas Oncology - South Texas Cancer Center
Valley Radiologists Ltd. - Paseo II Office 5605 W. Eugie Avenue Suite 110 Glendale AZ 85304	WCFHS	06/14/2006	AZ	
Good Samaritan Hospital 400 15th Avenue SE Puyallup WA 98372	500079	06/14/2006	WA	
St. John's Mercy Hospital 851 5th Street Washington MO 63090	260052	06/14/2006	MO	
Memorial Hermann The Woodlands OPID 9200 Pinecroft Drive Suite 100 The Woodlands TX 77380	741152597	07/14/2006	TX	
St. Luke's Hospital 232 South Wood's Mill Road Chesterfiled MO 63017	260179	07/14/2006	MO	
Lake Vista Cancer Center 2790 Lake Vista Drive Lewisville TX 75067	00543K	07/14/2006	TX	
Palms Imaging Medical Group Inc. 1901 Otlet Center Drive Oxnard CA 93036	W19564	07/14/2006	CA	
Houston Medical Imaging LLC 3310 Richmond Avenue Houston TX 77006	00137K	07/14/2006	TX	
Alliance Imaging-West Anaheim Med Ctr 3033 W. Orange Avenue Anaheim CA 92804	TD017	07/14/2006	CA	
Winthrop PET Imaging Center 222 Station Plaza North, Ste 140 Mineola NY 11501	330167	07/14/2006	NY	
Greenville Hospital System University Medical Center	420078	07/14/2006	SC	
High Field Open MRI 1895 Jefferson Road Rices Landing PA 15357	7885	07/14/2006	PA	
PETCT Center at -St. Anthony's POB 1201 5th Avenue North St. Petersburg FL 33705	E5753	07/14/2006	FL	Suite 100
Texas Oncology - Deke Slayton Cancer Center TX 77598	00t40e	07/14/2006	TX	
Invision North Florida Outpatient Imaging Center 6605 NW 9th Boulevard Gainesville FL 32609	E4639	07/14/2006	FL	
Memorial Hospital of Union County 500 London Avenue Marysville OH 43040	360092	07/14/2006	OH	
Texas Oncology/South Texas Cancer Center-McAllen 1901 S. 2nd Street McAllen TX 78503	00N39J	07/14/2006	TX	
Baylor Medical Center at Irving 1901 North MacArthur Boulevard Irving TX 75061	450079	07/14/2006	TX	
Providence Park Hospital 47601 Grand River Avenue Novi MI 48374	230019	07/14/2006	MI	
Texas Oncology-Abilene 1957 Antilley Road Abilene TX 79606	140414748	07/14/2006	TX	
St. Anthony Hospital 1000 North Lee Street Oklahoma City OK 73101	370037	07/14/2006	OK	
Rice Memorial Hospital 301 Becker Avenue SW Willmar MN 56201	240088	07/14/2006	MN	
Intermountain Medical Center 5121 South Cottonwood Street Murray, Utah 84157-7000	460010	07/14/2006	UT	Nuclear Medicine; Level 1 Out-Patient Tower
RMG First & Laurel Imaging Center 2466 First Avenue San Diego CA 92101	W14057	07/14/2006	CA	

Facility Name	Provider Number	Date Approved	State	Other Information
RMG Gardenview Imaging Center 1200 Gardenview Road Encinitas CA 92024	W14057F	07/14/2006	CA	Suite 110
Decatur County Memorial Hospital 720 North Lincoln Street Greensburg IN 47240	150062	07/14/2006	IN	
Midland Imaging Center 5001 Andrews Highway Midland TX 79703	00U75H	07/14/2006	TX	
Advanced Imaging, LLC 3433 NW 56th C-10 Oklahoma City OK 73112	400522379	07/14/2006	OK	
University of Iowa Hospitals and Clinics 200 Hawkins Drive Iowa City IA 52242	160058	07/14/2006	IA	
Az Oncology Associates PET/CT & CT Imaging Center 2070 W. Rudasill Road Tucson AZ 85704	25291	07/14/2006	AZ	Suite 110
Medical Diagnostic Imaging 14 Raymond Avenue Poughkeepsie NY 12603	EEN841	07/14/2006	NY	
Shore Memorial Hospital 10085 William F. Bernart Circle Nassawadox VA 23413	540560500	07/14/2006	VA	
Deaconess Hospital 600 Mary Street Evansville IN 47747	150082	07/14/2006	IN	
Great Neck Imaging,P.C. 907 Northern Boulevard Great Neck NY 11021	1487646311	07/14/2006	NY	
FMH Rose Hill 1562 Opossumtown Pike Frederick MD 21702	KP72	07/14/2006	MD	
Oakwood Annapolis Hospital 33155 Annapolis Road Wayne MI 48184	230142	07/14/2006	MI	
The Regional Cancer Center 2500 West 12th Street Erie PA 16505	140052	07/14/2006	PA	
Meritcare Hospital 801 North Broadway Fargo ND 58122	350011	07/14/2006	ND	
Community Hospitals and Wellness Centers 433 W. High Street Bryan OH 43506	360121	07/14/2006	OH	
Sacred Heart Hospital 900 W. Clairemont Avenue Eau Claire WI 54701	520013	07/14/2006	WI	
Via RADIOLOGY- Meridian Pavilion 11011 Meridian Avenue North #101 Seattle WA 98133	8859612	07/14/2006	WA	
Medical Outsourcing Services LLC 2200 Market Street Charlestown IN 47111	223260	07/14/2006	IN	
Allegheny General Hospital 320 East North Avenue Pittsburgh PA 15232	60503	07/14/2006	PA	Divison of Nuclear Medicine
Texas Oncology - 12th Avenue 1001 W. 12th Avenue Fort Worth TX 76104	00R66C	07/14/2006	TX	
Southwest Fort Worth Cancer Center 6500 Harris Parkway Fort Worth TX 76132	00R66C	07/14/2006	TX	
St. Rita's Medical Center 730 W. Market Street Lima OH 45801	360066	07/14/2006	OH	
New Mexico Oncology Hematology Consultants, Ltd. 4901 Lang Avenue NE Albuquerque NM 87109	850367056	07/14/2006	NM	
Emory Eastside Medical Center 545 Old Norcross Road Lawrenceville GA 30045	110192	07/14/2006	GA	Suite 200
Riverside Regional Medical Center 500 J. Clyde Morris Boulevard Newport News VA 23601	490052	07/14/2006	VA	
Connecticut Oncology & Hematology 220 Kennedy Drive Torrington CT 6790	C00633	07/14/2006	CT	
Chilton Memorial Hospital 97 West Parkway Pompton Plains NJ 7444	310017	07/14/2006	NJ	
Riverside Diagnostic Center Williamsburg 120 Kings Way Williamsburg VA 23188	490052	07/14/2006	VA	
Lawerence County MRI & Diagnostic Imaging Center 2526 Wilmington Road New Castle PA 16105	68617	07/14/2006	PA	
Joint Township District Memorial Hospital 200 St. Clair Street St. Marys OH 45885	360032	07/14/2005	OH	
Radiation Therapy Regional Centers 3680 Broadway Fort Myers FL 33901	77215	07/14/2006	FL	
Graduate Hospital 1800 Lombard Street Philadelphia PA 19146	390285	07/14/2006	PA	One Graduate Hospital
Columbia Diagnostic Center 1111 Paulison Avenue Clifton NJ 7015	94729	07/14/2006	NJ	
The Nebraska Medical Center 4250 Dewey Avenue Omaha NE 68113	280013	07/14/2006	NE	
Memorial Hermann Memorial City OPID 925 Gessner Road Houston TX 77024	741152597	07/14/2006	TX	
Clifton Springs Hospital and Clinic 2 Coulter Road Clifton Springs NY 14432	330265	07/14/2006	NY	
Monongalia General Hospital 1200 J. D. Anderson Drive Morgantown WV 26505	510024	07/14/2006	WV	Monongalia General Hospital
Providence Portland Medical Center 4805 NE Glisan Portland OR 97213	380061	07/14/2006	OR	
Highfield Open MRI, Inc. 995 Greentree Road Pittsburgh Pa 15220	7885	07/14/2006	PA	
Providence St. Vincent Medical Center 9205 SW Barnes Road Portland OR 97225	380004	07/14/2006	OR	
Conway Regional Imaging Center 555 Club Lane Conway AR 72034	40029	07/14/2006	AR	
Martin Memorial Medical Center 300 Hospital Avenue Stuart FL 34994	100044	07/14/2006	FL	
Northwest Medical Foundation of Tillamook 1000 Third Street Tillamook OR 97141	381317	07/14/2006	OR	Tillamook County General Hospital
OConnor Hospital 2105 Forest Avenue San Jose CA 95128-1471	50153	07/14/2006	CA	
Midtown Imaging, LLC – Wellington 440 N. State Road 7 Wellington FL 33411	E9133	07/14/2006	FL	
Midtown Imaging, LLC – Jupiter 345 Jupiter Lakes Boulevard Jupiter FL 33458	E9133	07/14/2006	FL	Suite 100
MMI/Mid Coast Hospital 51 US Route 1 Scarborough ME 04074	327079	07/14/2006	ME	Suite 'O'
Molecular Imaging Institute 5349 Commerce Boulevard Crown Point IN 46307	192870	07/14/2006	IN	
RCOA Imaging Services 11937 US Highway 271 Tyler TX 75708	FTN022	07/14/2006	TX	
MMI/Maine Medical Center 51 US Route 1 Scarborough ME 04074	327079	07/14/2006	ME	Suite 'O'
Radiology Ltd. 4640 East Camp Lowell Drive Tucson AZ 85712	WCBBM	07/14/2006	AZ	
Intermed Oncology Associates, S.C. 6701 159th Street Tinley Park IL 60477	610860	07/14/2006	IL	
Lakes Radiology 450 Canisteo Street Hornell NY 14843	1710937727	07/14/2006	NY	
Opelousas General Health System- South Campus 3975 I-49 South Service Road, Suite 100 Opelousas LA 70570	1447230388	07/14/2006	LA	
Florida Cancer Institute – BRK 7154 Medical Center Drive Spring Hill FL 34608	1427017326	08/07/2006	FL	
Capital Health System 446 Belleview Avenue Trenton NJ 08618	310044	08/07/2006	NJ	
Hudson Valley Diagnostic Imaging PLLC 575 Hudson Valley Avenue New Windsor NY 12553	WBH241	08/07/2006	NY	
St Joseph's Hospital 3200 Pleasant Valley Road West Benc WI 53095	520063	08/07/2006	WI	
Atlantic Medical Imaging 30 East Maryland Avenue Somers Point NJ 08244	101024	08/07/2006	NJ	

Facility Name	Provider Number	Date Approved	State	Other Information
Providence Imaging Center 3340 Providence Drive Anchorage AK 99508	2085R0202X	08/07/2006	AK	
Rochester Radiology Associates, PC 1277 Portland Avenue Rochester NY 14621	199726	08/07/2006	NY	
Melbourne Internal Medicine Associates 1132 South Hickory Street Melbourne FL 32901	77167	08/07/2006	FL	
Highline Imaging, LLC 275 SW 160th Street Seattle WA 98166	8801784	08/07/2006	WA	
Tyler PET 415 South Fleishel Tyler TX 75702	752131429	08/07/2006	TX	
Lake City Medical Center 340 NW Commerce Drive Lake City FL 32055	100156	08/07/2006	FL	
Blount Memorial Hospital 907 East Lamar Alexander Boulevard Maryville TN 37804	440011	08/07/2006	TN	
Texas Cancer Cntr Mesquite 4700 North Galloway Avenue Mesquite TX 75150	R339	08/07/2006	TX	
Rutland Regional Medical Center: Diagnositic Imaging 160 Allen Street Rutland VT 05701	470005	08/07/2006	VT	
MDMED, Inc. 155 Calle Portal, Suite 700 Sierra Vista AZ 85635	Z68496	08/07/2006	AZ	
Atlantic Medical Imaging Wall Twp 2399 North Highway 34 Manasquan NJ 8736	101024	08/07/2006	NJ	Ramshorn Executive Centre Bldg B
Newport Imaging Center 455 Old Newport Road Suite 101 Newport Beach CA 92660	W10829	08/07/2006	CA	
Cancer Care and Hematology Specialists(CCHSC) 8915 West Golf Road Niles IL 60714-5825	355030	08/07/2006	IL	
Hematology Oncology Associates of Illinois (HOAI) 715 West North Avenue Melrose Park IL 60160	218860	08/07/2006	IL	
Princeton Community Hospital 122 12th Street Ext Princeton WV 24740	510046	08/07/2006	WV	PO Box 1369
TRICAT, L.L.C. @ Edison 3830 Park Avenue Edison NJ 8820	27193	08/07/2006	NJ	Suite 102
Olathe Medical Center 20333 W. 151st Street Olathe KS 66061	170049	08/07/2006	KS	
St.Joseph Hospital 1140 West La Veta Avenue Orange CA 92868	50069	08/07/2006	CA	2nd Floor Nuclear Medicine
Baptist Health Medical Center 9601 I630, Exit 7 Little Rock AR 72205-7299	40114	08/07/2006	AR	
Florida Cancer Specialists 3840 Broadway Fort Myers FL 33901	1225064520	08/07/2006	FL	
Pacca Pet Imaging 5210 Belfort Road, Ste 130 Jacksonville FL 32256	37572	08/07/2006	FL	
National P.E.T. Scan Palm Beach, LLC 16110 Jog Road Delray Beach FL 33484	1164452405	08/07/2006	FL	Suite 200
Central Memphis Regional P.E.T. Imaging Center LLC 1388 Madison Avenue Memphis TN 38104	1295719110	08/07/2006	TN	
Johnston Memorial Hospital 351 Court Street NE Abingdon VA 24210	490053	08/07/2006	VA	
Lenox Hill Hospital 100 East 77th Street New York NY 10021	131624070	08/07/2006	NY	
Mercy Medical Center 411 Laurel Street Ste 2310 Des Moines IA 50314	160083	08/07/2006	IA	
New Orleans Regional P.E.T. Center, L.L.C. 3434 Prytania Street, Ste 120 New Orleans LA 70115	1538143474	08/07/2006	LA	
Indiana Regional Medical Center Pet Imaging 835 Hospital Road Indiana PA 15701	390173	08/07/2006	PA	PO Box 788
Mid American-Defiance Clinic 1400 E. Second Street Defiance, OH 43512	ID00809	08/07/2006	OH	
Total Imaging Robertson 737 West Brandon Boulevard Brandon FL 33511	k7282	08/07/2006	FL	
New Tampa Imaging Center 14302 N. Bruce B. Downs Boulevard Tampa FL 33613	k57209	08/07/2006	FL	
Summit Imaging 12037 Cortez Boulevard Brooksville FL 34613	40986	08/08/2006	FL	
University of NM Cancer Research & Treatment Ctr 900 Camino de Salud NE Albequerque NM 87131	400521103	08/08/2006	NM	
Alliance Imaging-Los Alamitos Med Ctr 3751 Katella Avenue Los Alamitos CA 90720	TD017	08/08/2006	CA	
NYU Clinical Cancer Center, Diagnostic Imaging 160 E. 34th Street New York NY 10016	W1L361	08/08/2006	NY	2nd Floor
Margaret Mary Community Hospital 321 Mitchell Avenue Batesville IN 47006	151329	08/08/2006	IN	
Quantum PET-Apple Hill 37 Monument Road York PA 17403	40635	08/08/2006	PA	
Memorial Hospital 1204 N. Mound Street Nacogdoches TX 75961	450508	08/08/2006	TX	
BMH-DeSoto 7601 Southcrest Pkwy Southaven MS 38671	250141	08/08/2006	MS	
Riverside Medical Center 300 Bourbonnais Campus Bourbonnais IL 60914	140186	08/08/2006	IL	Riverside Medical Center
UCSD Center for Molecular Imaging 11388 Sorrento Valley Road, Ste 100 San Diego CA 92121	TG302	08/08/2006	CA	
Imaging Partners at Valley LLC 400 South 43rd Street Renton WA 98055	AB38657	08/08/2006	WA	Olympic Building
El Paso Cancer Treatment Center 7848 Gateway East Boulevard El Paso TX 79915	00543K	08/08/2006	TX	
Desert Radiologists 3930 S Eastern Avenue Las Vegas NV 89119	VWCCBT	08/08/2006	NV	
Saint Joseph Hospital 2900 North Lake Shore Drive Chicago IL 60068	140224	08/08/2006	IL	
Midstate Medical Center 435 Lewis Avenue Meriden CT 6451	60646715	08/08/2006	VT	
Brookville Hospital 100 Hospital Road Brookville PA 15825	391312	08/08/2006	PA	
Suntree Diagnostic Center 6300 N. Wickham Road, Suite 101Melbourne FL 32940	701	08/08/2006	FL	
Virginia Mason Medical Center 1100 Ninth Avenue Seattle WA 98101	500005	08/08/2006	WA	
Van Wert County Hospital 1250 South Washington Street Van Wert OH 45891	360071	08/08/2006	OH	
Manhasset Diagnostic Imaging, PC 1350 Northern Boulevard, 2nd Floor Manhasset NY 11030	W14841	08/08/2006	NY	
Southern New Mexico Cancer Center 150 Road Runner Parkway Las Cruces NM 88011	752131429	08/08/2006	NM	
Davis Memorial Hospital Reed Street Elkins WV 26241	510030	08/08/2006	WV	Gorman Ave
Advocate Good Samaritan Hospital 3815 Highland Avenue Downers Grove IL 60515	140288	08/08/2006	IL	
Benefis Healthcare 1101 26th Street South Great Falls MT 59405	270012	08/08/2006	MT	
Fort Walton Beach Medical Center 1032 Mar Walt Drive Fort Walton Beach FL 32547	100223	08/08/2006	FL	
Blessing Hospital P.O. Box #7005 Quincy IL 62305	140015	08/08/2006	IL	
Alliance Imaging-Allen County Hospital 101 South 1st Street Iola KS 53808	130656	08/08/2006	KS	
Florida Cancer Institute – NPR 8763 River Crossing Boulevard New Port Richey FL 34655	1427017326	08/08/2006	FL	

Facility Name	Provider Number	Date Approved	State	Other Information
Kimball Medical Center 600 River Avenue Lakewood NJ 8701	315084	08/08/2006	NJ	
Radiology Imaging Associates at Heritage 8926 Woodyard Road Clinton MD 20735	521454775	08/08/2006	MD	Suite 502
Immanuel Medical Center 6901 North 72nd Street Omaha NE 68122	280081	08/08/2006	NE	
North Fork Radiology 1333 Roanoke Avenue Riverhead NY 11901	w11401	08/08/2006	NY	
South County PET Imaging LLC 10010 Kennerly Road St. Louis MO 63128	93053	08/08/2006	MO	
Carolinas Hospital System 805 Pamplico Highway Florence SC 29505	621587267	08/08/2006	SC	
Radiology Associated of Slo 522 E Plaza Drive Santa Maria Ca 93454	GR0009774	08/08/2006	CA	
Florida Cancer Specialists-Port Charlotte 22395 Edgewater Drive Port Charlotte FL 33980	1225064520	08/08/2006	FL	
Florida Cancer Specialists-Venice 901 South Tamiami Trail Venice FL 34285	1225064520	08/08/2006	FL	
Florida Cancer Specialists-Bradenton 6001 21st Avenue West Bradenton FL 34209	1225064520	08/08/2006	FL	
Nebraska Methodist Hospital 8303 Dodge Street Omaha NE 68114	280040	08/08/2006	NE	
PET/CT Center of Richardson 399 Melrose Drive Richardson TX 75080	1740207539	08/08/2006	TX	Suite A
Molecular Imaging at Sequoia Imaging Center 4949 W. Cypress Avenue Visalia CA 93277	ZZZ27463Z	08/08/2006	CA	
Central Jersey Radiologists 2128 Kings Highway Oakhurst NJ 7755	527995	08/08/2006	NJ	
Claxton-Hepburn Medical Center 214 King Street Ogdensburg NY 13669	330211	08/08/2006	NY	
Memorial Hermann Southeast 11800 Astoria Boulevard Houston TX 77089	741152597	08/08/2006	TX	
NSMS - Pine Bluff, AR 4253 Argosy Court Madison WI 53714	5f168	08/08/2006	WI	
Yuma Regional Medical Center 2400 S. Avenue A Yuma AZ 85364	866007596	08/08/2006	AZ	
Carle Clinic 1702 So Mattis Avenue Champagne IL 61820	371188284	08/08/2006	IL	
North Shore-LIJ Center for Advanced Medicine 450 Lakeville Road Lake Success NY 11042	330106	08/08/2006	NY	North Shore-LIJ Center for Advanced Medicine Diagnostic Imaging Center
McAlester Diagnostic Imaging 10 South Third Street McAlester OK 74501	1760411540	08/08/2006	OK	Suite 100
Mississippi Baptist Medical Center 501 Marshall Street Jackson MS 39202	250102	06/14/2006	MS	
Texas Oncology - South Texas Cancer Center 2121 Pease Street, Ste 101 Harlingen TX 78550	14041756	06/14/2006	TX	Texas Oncology - South Texas Cancer Center
Valley Radiologists Ltd. - Paseo II Office 5605 W. Eugie Avenue Suite 110 Glendale AZ 85304	WCFHS	06/14/2006	AZ	
Good Samaritan Hospital 400 15th Avenue SE Puyallup WA 98372	500079	06/14/2006	WA	
St. John's Mercy Hospital 851 5th Street Washington MO 63090	260052	06/14/2006	MO	
Memorial Hermann The Woodlands OPID 9200 Pinecroft Drive Suite 100 The Woodlands TX 77380	741152597	07/14/2006	TX	
St. Luke's Hospital 232 South Wood's Mill Road Chesterfiled MO 63017	260179	07/14/2006	MO	
Lake Vista Cancer Center 2790 Lake Vista Drive Lewisville TX 75067	00543K	07/14/2006	TX	
Palms Imaging Medical Group Inc. 1901 Otlet Center Drive Oxnard CA 93036	W19564	07/14/2006	CA	
Houston Medical Imaging LLC 3310 Richmond Avenue Houston TX 77006	00137K	07/14/2006	TX	
Alliance Imaging-West Anaheim Med Ctr 3033 W. Orange Avenue Anaheim CA 92804	TD017	07/14/2006	CA	
Winthrop PET imaging Center 222 Station Plaza North, Ste 140 Mineola NY 11501	330167	07/14/2006	NY	
Greenville Hospital System University Medical Center	420078	07/14/2006	SC	
High Field Open MRI 1895 Jefferson Road Rices Landing PA 15357	7885	07/14/2006	PA	
PETCT Center at -St. Anthony's POB 1201 5th Avenue North St. Petersburg FL 33705	E5753	07/14/2006	FL	Suite 100
Texas Oncology - Deke Slayton Cancer Center TX 77598	00t40e	07/14/2006	TX	
Invision North Florida Outpatient Imaging Center 6605 NW 9th Boulevard Gainesville FL 32609	E4639	07/14/2006	FL	
Memorial Hospital of Union County 500 London Avenue Marysville OH 43040	360092	07/14/2006	OH	
Texas Oncology/South Texas Cancer Center-McAllen 1901 S. 2nd Street McAllen TX 78503	00N39J	07/14/2006	TX	
Baylor Medical Center at Irving 1901 North MacArthur Boulevard Irving TX 75061	450079	07/14/2006	TX	
Providence Park Hospital 47601 Grand River Avenue Novi MI 48374	230019	07/14/2006	MI	
Texas Oncology-Abilene 1957 Antilley Road Abilene TX 79606	140414748	07/14/2006	TX	
St. Anthony Hospital 1000 North Lee Street Oklahoma City OK 73101	370037	07/14/2006	OK	
Rice Memorial Hospital 301 Becker Avenue SW Willmar MN 56201	240088	07/14/2006	MN	
LDS Hospital Nuclear Medicine 8th Ave & C Street Salt Lake City UT 84143	460010	07/14/2006	UT	
RMG First & Laurel Imaging Center 2466 First Avenue San Diego CA 92101	W14057	07/14/2006	CA	
RMG Gardenview Imaging Center 1200 Gardenview Road Encinitas CA 92024	W14057F	07/14/2006	CA	Suite 110
Decatur County Memorial Hospital 720 North Lincoln Street Greensburg IN 47240	150062	07/14/2006	IN	
Midland Imaging Center 5001 Andrews Highway Midland TX 79703	00U75H	07/14/2006	TX	
Advanced Imaging, LLC 3433 NW 56th C-10 Oklahoma City OK 73112	400522379	07/14/2006	OK	
University of Iowa Hospitals and Clinics 200 Hawkins Drive Iowa City IA 52242	160058	07/14/2006	IA	
Az Oncology Associates PET/CT & CT Imaging Center 2070 W. Rudasill Road Tucson AZ 85704	25291	07/14/2006	AZ	Suite 110
Medical Diagnostic Imaging 14 Raymond Avenue Poughkeepsie NY 12603	EEN841	07/14/2006	NY	
Shore Memorial Hospital 10085 William F. Bernart Circle Nassawadox VA 23413	540560500	07/14/2006	VA	
Deaconess Hospital 600 Mary Street Evansville IN 47747	150082	07/14/2006	IN	
Great Neck Imaging,P.C. 907 Northern Boulevard Great Neck NY 11021	1487646311	07/14/2006	NY	
FMH Rose Hill 1562 Opossumtown Pike Frederick MD 21702	KP72	07/14/2006	MD	

Facility Name	Provider Number	Date Approved	State	Other Information
Oakwood Annapolis Hospital 33155 Annapolis Road Wayne MI 48184	230142	07/14/2006	MI	
The Regional Cancer Center 2500 West 12th Street Erie PA 16505	140052	07/14/2006	PA	
Meritcare Hospital 801 North Broadway Fargo ND 58122	350011	07/14/2006	ND	
Community Hospitals and Wellness Centers 433 W. High Street Bryan OH 43506	360121	07/14/2006	OH	
Sacred Heart Hospital 900 W. Clairemont Avenue Eau Claire WI 54701	520013	07/14/2006	WI	
Via RADIOLOGY- Meridian Pavilion 11011 Meridian Avenue North #101 Seattle WA 98133	8859612	07/14/2006	WA	
Medical Outsourcing Services LLC 2200 Market Street Charlestown IN 47111	223260	07/14/2006	IN	
Allegheny General Hospital 320 East North Avenue Pittsburgh PA 15232	60503	07/14/2006	PA	Divison of Nuclear Medicine
Texas Oncology - 12th Avenue 1001 W. 12th Avenue Fort Worth TX 76104	00R66C	07/14/2006	TX	
Southwest Fort Worth Cancer Center 6500 Harris Parkway Fort Worth TX 76132	00R66C	07/14/2006	TX	
St. Rita's Medical Center 730 W. Market Street Lima OH 45801	360066	07/14/2006	OH	
New Mexico Oncology Hematology Consultants, Ltd. 4901 Lang Ave NE Albuquerque NM 87109	850367056	07/14/2006	NM	
Emory Eastside Medical Center 545 Old Norcross Road Lawrenceville GA 30045	110192	07/14/2006	GA	Suite 200
Riverside Regional Medical Center 500 J. Clyde Morris Boulevard Newport News VA 23601	490052	07/14/2006	VA	
Connecticut Oncology & Hematology 220 Kennedy Drive Torrington CT 06790	C00633	07/14/2006	CT	
Chilton Memorial Hospital 97 West ParkWay Pompton Plains NJ 7444	310017	07/14/2006	NJ	
Riverside Diagnostic Center Williamsburg 120 Kings Way Williamsburg VA 23188	490052	07/14/2006	VA	
Lawerence County MRI & Diagnostic Imaging Center 2526 Wilmington Road New Castle PA 16105	68617	07/14/2006	PA	
Joint Township District Memorial Hospital 200 St. Clair Street St. Marys OH 45885	360032	07/14/2005	OH	
Radiation Therapy Regional Centers 3680 Broadway Fort Myers FL 33901	77215	07/14/2006	FL	
Graduate Hospital 1800 Lombard Street Philadelphia PA 19146	390285	07/14/2006	PA	One Graduate Hospital
Columbia Diagnostic Center 1111 Paulison Avenue Clifton NJ 07015	94729	07/14/2006	NJ	
The Nebraska Medical Center 4250 Dewey Avenue Omaha NE 68113	280013	07/14/2006	NE	
Memorial Hermann Memorial City OPID 925 Gessner Road Houston TX 77024	741152597	07/14/2006	TX	
Clifton Springs Hospital and Clinic 2 Coulter Road Clifton Springs NY 14432	330265	07/14/2006	NY	
Monongalia General Hospital 1200 J. D. Anderson Drive Morgantown WV 26505	510024	07/14/2006	WV	Monongalia General Hospital
Providence Portland Medical Center 4805 NE Glisan Street Portland OR 97213	380061	07/14/2006	OR	
Highfield Open MRI, Inc. 995 Greentree Road Pittsburgh PA 15220	7885	07/14/2006	PA	
Providence St. Vincent Medical Center 9205 SW Barnes Road Portland OR 97225	380004	07/14/2006	OR	
Conway Regional Imaging Center 2120 Robinson Avenue Conway AR 72034	40029	07/14/2006	AR	
Martin Memorial Medical Center 300 Hospital Avenue Stuart FL 34994	100044	07/14/2006	FL	
Northwest Medical Foundation of Tillamook 1000 Third Street Tillamook OR 97141	381317	07/14/2006	OR	Tillamook County General Hospital
OConnor Hospital 2105 Forest Avenue San Jose CA 95128-1471	50153	07/14/2006	CA	
Midtown Imaging, LLC – Wellington 440 N. State Road 7 Wellington FL 33411	E9133	07/14/2006	FL	
Midtown Imaging, LLC – Jupiter 345 Jupiter Lakes Boulevard. Jupiter FL 33458	E9133	07/14/2006	FL	Suite 100
MMI/Mid Coast Hospital 51 US Route 1 Scarborough ME 4074	327079	07/14/2006	ME	Suite 'O'
Molecular Imaging Institute 5349 Commerce Boulevard Crown Point IN 46307	192870	07/14/2006	IN	
RCOA Imaging Services 11937 US Highway 271 Tyler TX 75708	FTN022	07/14/2006	TX	
MMI/Maine Medical Center 51 US Route 1 Scarborough ME 4074	327079	07/14/2006	ME	Suite 'O'
Radiology Ltd. 4640 East Camp Lowell Drive Tucson AZ 85712	WCBBM	07/14/2006	AZ	
Intermed Oncology Associates, S.C. 6701 159th Street Tinley Park IL 60477	610860	07/14/2006	IL	
Lakes Radiology 450 Canisteo Street Hornell NY 14843	1710937727	07/14/2006	NY	
Opelousas PET/CT Imaging Center 3975 I-49 South Service Road, Ste 100 Opelousas LA 70570	5DA11	07/14/2006	LA	
Florida Cancer Institute – BRK 7154 Medical Center Drive Spring Hill FL 34608	1427017326	08/07/2006	FL	
Capital Health System 446 Belleview Avenue Trenton NJ 08618	310044	08/07/2006	NJ	
Hudson Valley Diagnostic Imaging PLLC 575 Hudson Valley Avenue New Windsor NY 12553	WBH241	08/07/2006	NY	
St Joseph's Hospital 3200 Pleasant Valley Road West Benc WI 53095	520063	08/07/2006	WI	
Atlantic Medical Imaging 30 East Maryland Avenue Somers Point NJ 8244	101024	08/07/2006	NJ	
Providence Imaging Center 3340 Providence Drive Anchorage AK 99508	2085R0202X	08/07/2006	AK	
Rochester Radiology Associates, PC 1277 Portland Avenue Rochester NY 14621	199726	08/07/2006	NY	
Melbourne Internal Medicine Associates 1132 South Hickory Street Melbourne FL 32901	77167	08/07/2006	FL	
Highline Imaging, LLC 275 SW 160th Street Seattle WA 98166	8801784	08/07/2006	WA	
Tyler PET 415 South Fleishel Avenue Tyler TX 75702	752131429	08/07/2006	TX	
Lake City Medical Center 340 NW Commerce Drive Lake City FL 32055	100156	08/07/2006	FL	
Blount Memorial Hospital 907 East Lamar Alexander Boulevard Maryville TN 37804	440011	08/07/2006	TN	
Texas Cancer Cntr Mesquite 4700 North Galloway Mesquite TX 75150	R339	08/07/2006	TX	
Rutland Regional Medical Center: Diagnostic Imaging 160 Allen Street Rutland VT 5701	470005	08/07/2006	VT	
MDMED, Inc. 155 Calle Portal, Suite 700 Sierra Vista AZ 85635	Z68496	08/07/2006	AZ	

Facility Name	Provider Number	Date Approved	State	Other Information
Atlantic Medical Imaging Wall Twp 2399 North Highway 34 Manasquan NJ 8736	101024	08/07/2006	NJ	Ramshorn Executive Centre Bldg B
Newport Imaging Center 455 Old Newport Road Suite 101 Newport Beach CA 92660	W10829	08/07/2006	CA	
Cancer Care and Hematology Specialists(CCHSC) 8915 West Golf Road Niles IL 60714-5825	355030	08/07/2006	IL	
Hematology Oncology Associates of Illinois (HOAI) 715 West North Avenue Melrose Park IL 60160	218860	08/07/2006	IL	
Princeton Community Hospital 122 12th St Ext Princeton WV 24740	510046	08/07/2006	WV	PO Box 1369
TRICAT, L.L.C. @ Edison 3830 Park Avenue Edison NJ 8820	27193	08/07/2006	NJ	Suite 102
Olathe Medical Center 20333 W. 151st Street Olathe KS 66061	170049	08/07/2006	KS	
St.Joseph Hospital 1140 West La Veta Avenue Orange CA 92868	50069	08/07/2006	CA	2nd Floor Nuclear Medicine
Baptist Health Medical Center 9601 I630, Exit 7 Little Rock AR 72205-7299	40114	08/07/2006	AR	
Florida Cancer Specialists 3840 Broadway Fort Myers FL 33901	1225064520	08/07/2006	FL	
Pacca Pet Imaging 5210 Belfort Road, Ste 130 Jacksonville FL 32256	37572	08/07/2006	FL	
National P.E.T. Scan Palm Beach, LLC 16110 Jog Road Delray Beach FL 33484	1164452405	08/07/2006	FL	Suite 200
Central Memphis Regional P.E.T. Imaging Center LLC 1388 Madison Avenue Memphis TN 38104	1295719110	08/07/2006	TN	
Johnston Memorial Hospital 351 Court Street NE Abingdon VA 24210	490053	08/07/2006	VA	
Lenox Hill Hospital 100 East 77th Street New York NY 10021	131624070	08/07/2006	NY	
Mercy Medical Center 411 Laurel Street Ste 2310 Des Moines IA 50314	160083	08/07/2006	IA	
New Orleans Regional P.E.T. Center, L.L.C. 3434 Prytania Street, Ste 120 New Orleans LA 70115	1538143474	08/07/2006	LA	
Indiana Regional Medical Center Pet Imaging 835 Hospital Road Indiana PA 15701	390173	08/07/2006	PA	PO Box 788
Mid American-Defiance Clinic 1400 E. Second Street Defiance, OH 43512	ID00809	08/07/2006	OH	
Total Imaging Robertson 737 West Brandon Boulevard. Brandon FL 33511	k7282	08/07/2006	FL	
New Tampa Imaging Center 14302 N. Bruce B. Downs Boulevard Tampa FL 33613	k57209	08/07/2006	FL	
Summit Imaging 12037 Cortez Boulevard Brooksville FL 34613	40986	08/08/2006	FL	
University of NM Cancer Research & Treatment Ctr 900 Caminodey Salud NE Albequerque NM 87131	400521103	08/08/2006	NM	
Alliance Imaging-Los Alamitos Med Ctr 3751 Katella Avenue Los Alamitos CA 90720	TD017	08/08/2006	CA	
NYU Clinical Cancer Center, Diagnostic Imaging 160 E. 34th Street New York NY 10016	W1L361	08/08/2006	NY	2nd Floor
Margaret Mary Community Hospital 321 Mitchell Avenue Batesville IN 47006	151329	08/08/2006	IN	
Quantum PET - Apple Hill 37 Monument Road York PA 17403	40635	08/08/2006	PA	
Memorial Hospital 1204 N. Mound Street Nacogdoches TX 75961	450508	08/08/2006	TX	
BMH-DeSoto 7601 Southcrest Pkwy Southaven MS 38671	250141	08/08/2006	MS	
Riverside Medical Center 300 Bourbonnais Campus Bourbonnais IL 60914	140186	08/08/2006	IL	Riverside Medical Center
UCSD Center for Molecular Imaging 11388 Sorrento Valley Road, Ste 100 San Diego CA 92121	TG302	08/08/2006	CA	
Imaging Partners at Valley LLC 400 South 43rd Street Renton WA 98055	AB38657	08/08/2006	WA	Olympic Building
El Paso Cancer Treatment Center 7848 Gateway East Boulevard El Paso TX 79915	00543K	08/08/2006	TX	
Desert Radiologists 3930 S Eastern Avenue Las Vegas NV 89119	VWCCBT	08/08/2006	NV	
Saint Joseph Hospital 2900 North Lake Shore Drive Chicago IL 60068	140224	08/08/2006	IL	
Midstate Medical Center 435 Lewis Avenue Meriden CT 6451	60646715	08/08/2006	VT	
Brookville Hospital 100 Hospital Road Brookville PA 15825	391312	08/08/2006	PA	
Suntree Diagnostic Center 6300 N. Wickham Road, Suite 101 Melbourne FL 32940	701	08/08/2006	FL	
Virginia Mason Medical Center 1100 Ninth Avenue Seattle WA 98101	500005	08/08/2006	WA	
Van Wert County Hospital 1250 South Washington Street Van Wert OH 45891	360071	08/08/2006	OH	
Manhasset Diagnostic Imaging, PC 1350 Northern Boulevard, 2nd Floor Manhasset NY 11030	W14841	08/08/2006	NY	
Southern New Mexico Cancer Center 150 Road Runner Parkway Las Cruces NM 88011	752131429	08/08/2006	NM	
Davis Memorial Hospital Reed Street Elkins WV 26241	510030	08/08/2006	WV	Gorman Ave
Advocate Good Samaritan Hospital 3815 Highland Avenue Downers Grove IL 60515	140288	08/08/2006	IL	
Benefis Healthcare 1101 26th Street South Great Falls MT 59405	270012	08/08/2006	MT	
Fort Walton Beach Medical Center 1032 Mar Walt Drive Fort Walton Beach FL 32547	100223	08/08/2006	FL	
Blessing Hospital P.O. Box #7005 Quincy IL 62305	140015	08/08/2006	IL	
Alliance Imaging-Allen County Hospital 101 South 1st Street Iola KS 53808	130656	08/08/2006	KS	
Florida Cancer Institute – NPR 8763 River Crossing Boulevard New Port Richey FL 34655	1427017326	08/08/2006	FL	
Kimball Medical Center 600 River Avenue Lakewood NJ 08701	315084	08/08/2006	NJ	
Radiology Imaging Associates at Heritage 8926 Woodyard Road Clinton MD 20735	521454775	08/08/2006	MD	Suite 502
Immanuel Medical Center 6901 North 72nd Street Omaha NE 68122	280081	08/08/2006	NE	
North Fork Radiology 1333 Roanoke Avenue Riverhead NY 11901	w11401	08/08/2006	NY	
South County PET Imaging LLC 10010 Kennerly Road St. Louis MO 63128	93053	08/08/2006	MO	
Carolinas Hospital System 805 Pamplico Highway Florence SC 29505	621587267	08/08/2006	SC	
Radiology Associates of Slo 522 E Plaza Drive Santa Maria CA 93454	GR0009774	08/08/2006	CA	
Florida Cancer Specialists-Port Charlotte 22395 Edgewater Drive Port Charlotte FL 33980	1225064520	08/08/2006	FL	
Florida Cancer Specialists-Venice 901 South Tamiami Trail Venice FL 34285	1225064520	08/08/2006	FL	
Florida Cancer Specialists-Bradenton 6001 21st Avenue West Bradenton FL 34209	1225064520	08/08/2006	FL	

Facility Name	Provider Number	Date Approved	State	Other Information
Nebraska Methodist Hospital 8303 Dodge Street Omaha NE 68114	280040	08/08/2006	NE	
PET/CT Center of Richardson 399 Melrose Richardson TX 75080	1740207539	08/08/2006	TX	Suite A
Molecular Imaging at Sequoia Imaging Center 4949 W. Cypress Avenue Visalia CA 93277	ZZZ27463Z	08/08/2006	CA	
Central Jersey Radiologists 2128 Kings Highway Oakhurst NJ 07755	527995	08/08/2006	NJ	
Claxton-Hepburn Medical Center 214 King Street Ogdensburg NY 13669	330211	08/08/2006	NY	
Memorial Hermann Southeast 11800 Astoria Boulevard Houston TX 77089	741152597	08/08/2006	TX	
NSMS - Pine Bluff, AR 4253 Argosy Court Madison WI 53714	5f168	08/08/2006	WI	
Yuma Regional Medical Center 2400 S. Avenue A Yuma AZ 85364	866007596	08/08/2006	AZ	
Carle Clinic 1702 So Mattis Avenue Champagne IL 61820	371188284	08/08/2006	IL	
North Shore-LIJ Center for Advanced Medicine 450 Lakeville Road Lake Success NY 11042	330106	08/08/2006	NY	North Shore-LIJ Center for Advanced Medicine Diagnostic Imaging Center
McAlester Diagnostic Imaging 10 South Third Street McAlester OK 74501	1760411540	08/08/2006	OK	Suite 100
California Imaging Institute 1867 E. Fir Avenue Fresno CA 93720	ZZZ03565Z	08/08/2006	CA	N/A
Bon Secours Memorial Regional Medical Center 8260 Atlee Road Mechanicsville VA 23116	541744931	08/08/2006	VA	N/A
University of Maryland Medical Center 22 S. Greene Street Gudelksy 2nd Fl Baltimore MD 21201	210002	08/08/2006	MD	Division of Nuclear Medicine
Bixby Medical Center 818 Riverside Avenue Adrian MI 49221	230005	08/08/2006	MI	N/A
Kern Radiology Medical Group 2301 Bahamas Drive Bakersfield CA 93309	1720023997	08/08/2006	CA	N/A
Bon Secours St. Francis Medical Center 13710 St. Francis Boulevard Midlothian VA 23114	311716973	08/08/2006	VA	N/A
MMI/Maine General Waterville 51 US Route 1 Scarborough ME 4074	327079	08/08/2006	ME	Suite 'O'
Mount Adams Imaging Center 3911 Castlevale Road Yakimaw WA 98902	8857843	08/08/2006	WA	N/A
Carilion Roanoke Memorial Hospital 2001 Crystal Spring Avenue Roanoke VA 24014	490024	08/08/2006	VA	N/A
Seton Medical Center;Nuclear Medicine Dept. 1900 Sullivan Avenue Daly City CA 94015-2229	50289	08/08/2006	CA	N/A
Arnett Imaging Center 2403 Loy Drive Lafayette IN 47909	224390	08/08/2006	IN	N/A
Advanced Diagnostic Imaging, PC 1120 Professional Boulevard Evansville IN 47630	639970	08/08/2006	IN	N/A
Queen of Peace Hospital 301 Second Street NE New Prague MN 56071	241361	08/08/2006	MN	N/A
Agnesian Health Care 430 E. Division Street Fond du Lac WI 54935	520088	08/08/2006	WI	N/A
ACMH Hospital One Nolte Drive Kittanning PA 16201	390163	08/08/2006	PA	N/A
Wilshire Oncology Medical Group, Inc. 1280 Corona Pointe Court Corona CA 92879	zzz19568z	08/08/2006	CA	Suite 112
United Radiology - Laurel 14201 Laurel Park Drive Laurel MD 20707	2.01558E+11	08/08/2006	MD	Suite 208
Bay Area Medical Center 3100 Shore Drive Marinette WI 54143	520113	08/08/2006	WI	N/A
Penn State Milton S Hershey Medical Center 500 University Drive Hershey PA 17033	251854772	08/08/2006	PA	HG380
Delta St. Joseph's MRI, LLC 1617 N. California Street Stockton CA 95204	ZZZ19725Z	08/08/2006	CA	Suites 1A and 1B
United Radiology:Bowie 16701 Melford Boulevard Bowie MD 20715	2.01558E+11	08/08/2006	MD	N/A
United Radiology Gaithersburg 702 Russell Avenue Gaithersburg MD 20877	2.01558E+11	08/08/2006	MD	N/A
United Radiology Olney 18120 Hillcrest Drive Olney MD 20832	2.01558E+11	08/08/2006	MD	Suite A
FCS/Axcess Diagnosis/Sarasota 600 N. Cattleman Road Sarasota FL 34232	1225064520	08/08/2006	FL	N/A
NSMS - Greenville, IL 4253 Argosy Court Madison WI 53714	208196	08/08/2006	WI	N/A
FCS/Axcess Diagnosis/Venice 842 Sunset Lake Boulevard Venice FL 34292	1225064520	08/08/2006	FL	Suite #301
PET CT Radiology PLLC 8715 5th Avenue Brooklyn NY 11209	1366681066	09/05/2006	NY	N/A
Rena Tarbet Cancer Center 4201 Medical Center Drive Suite 180 McKinney TX 75069	oow753	09/05/2006	TX	N/A
McLaughlin & Marte, M.D., L.L.P. 3850 Tampa Road Suite 202 Palm Harbor FL 34684	1003862079	09/05/2006	FL	N/A
BryanLGH Medical Center 2300 South 16th Street Lincoln NE 68502	280003	09/05/2006	NE	N/A
Freehold MR Associates 691 West Main Street Freehold NJ 07728	405856	09/05/2006	NJ	N/A
Franciscan Skemp Healthcare 700 West Avenue South La Crosse WI 54601	520004	09/05/2006	WI	N/A
Teton Radiology 2001 S. Woodruff Avenue Suite 17 Idaho Falls ID 83404	1371462	09/05/2006	ID	N/A
Fletcher Allen Health Care Mobile Pad Colchester VT 05446	1659309615	09/05/2006	VT	790 College Parkway
University of Penn Imaging Center 3600 Market Street 3rd Floor Silverstein Philadelphia PA 19104	764089	09/05/2006	PA	N/A
Sitron-HAmmel Radiology Group 4277 Hempstead Turnpike Suite 200 Bethpage NY 11714	W14891	09/05/2006	NY	N/A
MRI of SLO 1064 Murray Avenue San Luis Obispo CA 93405	1881661361	09/05/2006	CA	N/A
Lahey Clinic 41 Mall Road Burlington MA 1805	220171	09/05/2006	MA	N/A
St Joseph Medical Center 12th Street Reading PA 19603	390096	09/05/2006	PA	N/A
Spartanburg Regional Medical Center 101 E Wood Street Spartanburg SC 29303	420007	09/05/2006	SC	N/A
Aurora Sinai Medical Center 945 N. 12th Street Milwaukee WI 53201	520064	09/05/2006	WI	N/A
FHN Memorial Hospital 1045 W. Stephenson Street Freeport IL 61032	140160	09/05/2006	IL	N/A
Southwest Washington Medical Center 400 NE Mother Joseph Place Vancouver WA 98668	500050	09/05/2006	WA	N/A
St. Luke's Center for Diagnostic Imaging 6 McBride and Sons Corporate Center Drive Suite 101 Chesterfield MO 63005	47006	09/05/2006	MO	N/A
The Stamford Health System Shelbourn Road & West Broad Street Stamford CT 6904	70006	09/05/2006	CT	N/A
Hagerstown Imaging, LLC 1150 A Professional Court Hagerstown MD 21741	1518914936	09/05/2006	MD	N/A
GCM Suburban Imaging 6420 Rockledge Drive, Suite 3100 Bethesda MD 20817	409623	09/05/2006	MD	N/A

Facility Name	Provider Number	Date Approved	State	Other Information
Alliance Imaging-No. Idaho Imaging 2003 Lincoln Way Coeur d'Alene ID 83814	1790291	09/05/2006	ID	N/A
Millennium PET/CT 22710 Professional Drive Suite 104 Kingwood TX 77339	0019BY	09/05/2006	TX	N/A
Parma Community General Hospital 7007 Powers Boulevard Parma OH 44129	360041	09/05/2006	OH	N/A
Pacific Shores Medical Group Pet Imaging 1043 Elm Street #104 Long Beach CA 90813	W13494	09/05/2006	CA	N/A
Clark Memorial Hospital 1220 Missouri Avenue Jeffersonville IN 47130	15009	09/05/2006	IN	N/A
Abilene Imaging Center LLC 750 North 18th Street Abilene TX 79601	FTA070	09/05/2006	TX	N/A
DuBois Regional Medical Center 100 Hospital Avenue DuBois PA 15801	390086	09/06/2006	PA	N/A
Meeker County Memorial Hospital 612 South Sibley Avenue Litchfield MN 55355	241366	09/06/2006	MN	N/A
Memorial Health 4700 Waters Avenue Savannah GA 31403	110036	09/06/2006	GA	N/A
St. Luke's Regional Medical Center, Ltd. 190 E. Bannock Street Boise ID 83712	130006	09/06/2006	ID	N/A
Radiology Consultants Imaging Center 400 Avenue K, S.E. Winter Haven FL 33880	U3944	09/06/2006	FL	N/A
Patient Comprehensive Cancer Center 4352 North Josey Lane Carrollton TX 75010	0083BY	09/06/2006	TX	N/A
The University of Tennessee Medical Center 1924 Alcoa Highway Knoxville TN 37920	440015	09/06/2006	TN	N/A
Radiation Therapy Regional Centers-Naples 800 Goodlette Road Suite 110 Naples FL 34102	77215	09/06/2006	FL	N/A
St. Mary's Medical Center 2900 First Avenue Huntington WV 25702	510007	09/06/2006	WV	N/A
McKinney Regional Cancer Center 4601 Medical Center Drive McKinney TX 75069	00711W	09/06/2006	TX	N/A
WCA Hospital PO Box 840 Jamestown NY 14701	330239	09/06/2006	NY	207 Foote Avenue
Grants Pass Imaging And Diagnostic Center, LLC1619 NW Hawthorne Avenue, Suite 110 Grants Pass OR 97526	1659307973	09/06/2006	OR	N/A
Baptist Memorial Hospital - Golden Triangle 2520 5th Street North Columbus MS 39705	250100	09/06/2006	MS	N/A
Florida Medical Clinic 13417 US Highway 301 Dade City FL 33525	39715	09/06/2006	FL	N/A
Saint Clare's Hospital 400 West Blackwell Street Dover NJ 07801	310067	09/06/2006	NJ	N/A
Radiation Medicine Associates 2202 South 77 Sun Shine Strip Suite E Harlingen TX 78550	00645N	09/06/2006	TX	N/A
The Radiology Clinic,L.L.C. 208 Mcfarland Circle North Tuscaloosa AL 35406	13089	09/06/2006	AL	N/A
Bay Area Hospital 1775 Thompson Road Coos Bay OR 97420	30090	09/06/2006	OR	N/A
MMI/St. Mary's Hospital 51 US Route 1 Scarborough ME 04074	327079	09/06/2006	ME	Suite 'O'
Gulf Coast Medical Diagnostic Center 2024 State Avenue Panama City FL 32405	30930	09/06/2006	FL	N/A
Diagnostic Radiology Systems, Inc. 1010 Medical Center Drive Powderly KY 42366	9366001	09/06/2006	KY	N/A
Lewis Gale Medical Center 1900 Electric Road Salem VI 24153	490048	09/06/2006	VI	N/A
Radiology Diagnostic Center 1310 Las Tablas Suite 103 Templeton CA 93465	W7491	09/06/2006	CA	N/A
Weslaco Nuclear Imaging Center 913 S. Airport Drive Weslaco TX 78596	1780796219	09/06/2006	TX	N/A
Pioneer PET, LLC 1930 E. Southern Avenue Tempe, AZ 85282	1265401996	05/30/2006	AZ	N/A
Pioneer PET, LLC 1930 E. Southern Avenue Tempe AZ 85282	1265401996	12/05/2006	AZ	N/A
Good Samaritan – Kearney Imaging Center 3219 Central Ave. Suite 109 Kearney NE 68847	280009	12/05/2006	NE	N/A
Rose Medical Center 4567 East 9th Avenue Denver CO 80220	841321373	12/05/2006	CO	N/A
UCSF Medical Center 185 Berry Street San Francisco CA 94107	50454	12/05/2006	CA	Lobby 7, Suite 180
Broward General Medical Center 1500 S. Andrews Avenue Fort Lauderdale FL 33316	100039	12/05/2006	FL	N/A
St. Paul Radiology, PA/Midwest Radiology 166 Fourth Street East St. Paul MN 55101	CO2661	12/05/2006	MN	N/A
Queen of the Valley Hospital 1000 Trancas Street Napa CA 94558	941243669	12/05/2006	CA	N/A
Dana-Farber Cancer Institute 44 Binney Street Boston MA 02115	220162	12/05/2006	MA	N/A
Holmes Regional Medical Center 1350 South Hickory Street Melbourne FL 32901	100019	12/05/2006	FL	N/A
Niagara County PET Center Niagara County PET Center NY 14302	f27482	12/05/2006	NY	621 Tenth Street, Department of Radiology
Augusta Medical Center 78 Medical Center Drive Fishersville VA 22939	490018	12/05/2006	VA	N/A
Nevada Cancer Center 2851 North Tenaya Way Las Vegas NV 89128	VWQBHJ	12/05/2006	NV	#100
Wellstar Kennestone Hospital Imaging Center 340 Kennestone Hospital Boulevard Marietta GA 30060	110035	12/05/2006	GA	Suite LL10
Ashtabula County Medical Center 2412 Lake Avenue Ashtabula OH 44004	1285607416	12/05/2006	OH	The Regional Cancer Center
Rowan Regional Medical Center 514 Corporate Circle Salisbury NC 28147	340015	12/05/2006	NC	N/A
The Pottsville Hospital and Warne Clinic 420 South Jackson Street Pottsville PA 17901	390030	12/05/2006	PA	N/A
Georgetown Memorial Hospital 606 Blackriver Road Georgetown SC 29442	1982604021	12/05/2006	SC	N/A
Medical Center of Arlington 3301 Matlock Road Arlington TX 76015	450675	12/05/2006	TX	N/A
Valley View Regional Hospital 430 N Monte Vista Street Ada OK 74820	370020	12/05/2006	OK	N/A
Montgomery Medical Services 644 Maysville Road, Ste 10 Mount Sterling KY 40353	9141	12/05/2006	KY	N/A
Medical Outsourcing Services LLC 5409 N. Knoxville Avenue Peoria IL 61614	211224	12/05/2006	IL	N/A
Medical Outsourcing Services LLC 1300 N. Main Street Rushville IN 46173	223260	12/05/2006	IN	N/A
Mayo Clinic Arizona 13400 E. Shea Boulevard Scottsdale AZ 85259	WCTGB	12/05/2006	AZ	N/A
Door County Memorial Hospital 323 S. 18th Ave Sturgeon Bay WI 54235	1093743874	12/05/2006	WI	N/A
Center for Diagnostic Imaging-Sartell 166 19th Street So Sartell MN 56377	C01307	12/05/2006	MN	Suite 100
South Texas Institute of Cancer 1205 South 19th Street Corpus Christi TX 78405	0065AZ	12/05/2006	TX	N/A
Del Sol Medical Center 10460 Vista Del Sol El Paso TX 79925	450646	12/05/2006	TX	N/A
University Hospital 818 St. Sebastian Way Augusta GA 30901	110028	12/05/2006	GA	Ste. 103

Facility Name	Provider Number	Date Approved	State	Other Information
St. John Health System-Tulsa, OK 1923 S. Utica Avenue Tulsa OK 74104	370114	12/05/2006	OK	N/A
Allen Memorial Hospital 1825 Logan Avenue Waterloo IA 50703	160110	12/05/2006	IA	N/A
Craig General Hospital 735 North Foreman Street Vinita OK 74301	370065	12/05/2006	OK	N/A
Vision Imaging of Kingston 517 Pierce Street Kingston PA 18704	86463	12/05/2006	PA	N/A
Lake Hospital Mentor Campus 9485 Mentor Avenue Mentor OH 44060	360098	12/05/2006	OH	Attn: Suite A
Excela RCL PET CT Imaging, LLC 200 Village Drive Greensburg PA 15601	1144260415	12/05/2006	PA	N/A
Kousay Al-Kourainy, M.D. 5395 Ruffin Road #202 San Diego CA 92123	A39783	12/05/2006	CA	N/A
Memorial Hermann Northwest Hospital 1635 North Loop West Houston TX 77008	450184	12/05/2006	TX	N/A
Accu/Site PET/CT Imaging Center 30 Harrison Street Johnson City NY 13790	DD1474	12/05/2006	NY	Suite #102
DDIS-BOND 9 Bond Street Brooklyn NY 11201	687s41	12/05/2006	NY	N/A
West Valley Radiology Medical Group 7301 Medical Center Drive West Hills CA 91307	Hw5870A	12/05/2006	CA	Suite 103
Westside Diagnostic and Therapeutic Med Center LLC 12524 West Washington Boulevard Los Angeles CA 90066	TG472	12/05/2006	CA	N/A
DDIS-STILL 1783 Stillwell Avenue Brooklyn NY 11223	687s41	12/05/2006	NY	N/A
Alpena Regional Medical Center 1501 W Chisholm Street Alpena MI 49707	386000029	12/05/2006	MI	N/A
Santa Monica Imaging Ctr 1245 16th Street Ste 105 Santa Monica CA 90404	1881670248	12/05/2006	CA	N/A
Mercer County Community Hospital 800 W. Main Street Coldwater OH 45828	360058	12/05/2006	OH	N/A
Johnson Memorial Hospital 1125 W. Jefferson Street Franklin IN 46131-2675	150001	12/05/2006	IN	P O Box 549
St. Mary's Health Center 100 St. Mary's Medical Plaza Jefferson City MO 65101	260011	12/05/2006	MO	N/A
Eastside P.E.T. Center, LLC 46 Medical Park East Drive Birmingham AL 35023	1619925070	12/05/2006	AL	Suite 224
United Regional Health Care System 1600 8th Street Wichita Falls TX 76301	450010	12/05/2006	TX	N/A
Denton Regional Medical Center 3535 S. I-35 Denton TX 76210	450634	12/05/2006	TX	N/A
Canton - Potsdam Hospital 50 Leroy Street Potsdam NY 13676	161012691	12/05/2006	NY	N/A
St.John Macomb Hospital 11800 E 12 mile Warren MI 48093	230195	12/05/2006	MI	N/A
Cleveland Regional Medical Center 201 East Grover Street Shelby NC 28150	340021	12/05/2006	NC	N/A
Bluefield Regional Medical Center 500 Cherry Street Bluefield WV 24701	510071	12/05/2006	WV	N/A
Charles Cole Memorial Hospital 1001 East Second Street Coudersport PA 16915	390246	12/05/2006	PA	N/A
New Jersey State Open MRI 155 State Street Hackensack NJ 7601	85238	12/06/2006	NJ	N/A
Westcoast Radiology 501 S. Lincoln Avenue Clearwater FL 33756	E4187	12/06/2006	FL	N/A
The Iowa Clinic / PETCO LLC 1221 Pleasant Street Des Moines IA 50309	I5819	12/06/2006	IA	N/A
Quantum PET - Holy Spirit Hospital 890 Poplar Church Road Camp Hill PA 17011	40635	12/06/2006	PA	N/A
Coastal Bend PET Scan, LTD 1533 5th Street Corpus Christi TX 78404	FTN014	12/06/2006	TX	N/A
Pottstown Memorial Medical Center 1600 E High Street Pottstown PA 19464	390123	12/06/2006	PA	N/A
UTMB PET/CT Imaging Center UTMB-Rebecca Sealy Hospital Galveston TX 77555-0793	R518	12/06/2006	TX	301 University Boulevard.
Diagnostic Imaging Services, LLC 11110 Medical Campus Road, Suite 204 Hagerstown MD 21742	1114982808	12/06/2006	MD	N/A
North Memorial Medical Center 3435 West Broadway Robbinsdale MN 55422	1851344907	12/06/2006	MN	N/A
Hays Medical Center 2220 Canterbury Drive Hays KS 67601	2473	12/06/2006	KS	N/A
St. Patrick Hospital & Health Sciences Center 500 West Broadway Missoula Mt 59802	1023032588	12/06/2006	MT	N/A
Park Ridge Hospital 100 Hospital Drive Hendersonville NC 28792	340023	12/06/2006	NC	N/A
Fostoria Community Hospital 610 Plaza Drive Fostoria OH 44830	361318	12/06/2006	OH	N/A
UMDNJ-University Hospital 30 Bergen Street Newark NJ 07101	221775306	12/06/2006	NJ	ADMC 5 Room 575 P.O. Box 1709
Metabolic Imaging of Boca 5458 Town Center Road, Suite 103 Boca Raton, FL 33486	E5434	12/06/2006	FL	N/A
Olean Open MRI 413 North 8th Street Olean NY 14760	AA0996	12/06/2006	NY	N/A
Mercy Memorial Health Center 1011 14th Avenue NW Ardmore OK 73401	731500629	12/06/2006	OK	N/A
Pontiac Osteopathic Hospital dba POH Medical Ctr 385 N Lapeer Road Oxford MI 48371	230207	12/06/2006	MI	N/A
Texas Oncology Ft. Worth 1450 8th Avenue Fort Worth TX 76104	00R66C	12/06/2006	TX	N/A
West Valley Imaging 3025 s. Rainbow Boulevard Las Vegas NV 89146	WQBDY	12/06/2006	NV	N/A
Springman Medical Plaza Imaging Center PO Box 4650 Brownsville TX 78523	1912973108	12/06/2006	TX	N/A
EMH Regional Health Care System 630 East River Street Elyria OH 44035	360145	12/06/2006	OH	N/A
Denfeld Medical Center 4702 Grand Avenue Duluth MN 55807	C06028	12/06/2006	MN	N/A
Caldwell Memorial Hospital 321 Mulberry Street SW Lenoir NC 28645	560554202	12/06/2006	NC	N/A
Belleville, IL (Swansea) 4253 Argosy Court Madison WI 53714	208196	12/06/2006	WI	N/A
Comprehensive Cancer Centers of Nevada - NW Office 7445 Peak Drive Las Vegas NV 89128	WCHCX	12/06/2006	NV	N/A
Wheaton Francisan Healthcare-St. Joseph 5000 W. Chambers Street Milwaukee WI 53210	520136	12/06/2006	WI	N/A
United Hospital Center Rt. 19 South Clarksburg WV 26302-1680	510006	12/06/2006	WV	#3 Hospital Plaza
Massena Memorial Hospital 1 Hospital Drive Massena NY 13662	330223	12/06/2006	NY	N/A
Redlands Community Hospital 350 Terracina Boulevard Redlands CA 92373	ZZZ01782Z	12/06/2006	CA	N/A
The Valley Hospital 1 Valley Health Plaza Paramus NJ 07652	310012	12/06/2006	NJ	N/A
Advanced Medical Imaging of Toms River 1430 Hooper Avenue Toms River NJ 8753	447655	12/06/2006	NJ	Suite 102
Christus Santa Rosa-New Branufels 598 N Union Street New Braunfels TX 78130	450059	12/06/2006	TX	N/A

Facility Name	Provider Number	Date Approved	State	Other Information
NSMS - Parkland Farmington, Mo 4253 Argosy Court Madison WI 53714	208196	12/06/2006	WI	N/A
Alton Memorial Hospital 1 Memorial Drive Alton IL 62002	14002	12/06/2006	IL	N/A
Medical City Dallas Hospital Diagnostic Imaging Dallas TX 75230	20943901	12/06/2006	TX	7777 Forest Ln
Mercy Medical Center 301 St Paul Place Baltimore MD 21202	210008	12/06/2006	MD	N/A
St. Joseph's Medical Center 503 N. 3rd Street Brainerd MN 56401	240075	12/06/2006	MN	N/A
Covenant Healthcare 600 Irving Street Saginaw MI 48602	1457354318	12/06/2006	MI	N/A
Little Company of Mary Hospital 2800 West 95th Street Evergreen Park IL 60805	140179	12/06/2006	IL	N/A
Marion General Hospital Progressive Medical Imaging 830 N Theatre Drive Marion IN 46952	1457354318	12/06/2006	IN	N/A
Escondido Pulmonary Medical Group 5395 Ruffin Road, Suite 202 San Diego CA 92123	W301	12/06/2006	CA	N/A
Marshall Medical Center 1100 Marshall Way Placerville CA 95667	50254	12/06/2006	CA	N/A
Clermont Radiology 1804 Oakley Seaver Drive Clermont FL 34711	U5066	12/06/2006	FL	STE B
Mahoning Valley Imaging Ltd 7067 Tiffany Boulevard Youngstown OH 44514	1457354318	12/06/2006	OH	N/A
Southeastern Ohio Regional Medical Center 1341 Clark Avenue Cambridge OH 43725	1457354318	12/06/2006	OH	N/A
White County Medical Center 3214 E. Race Avenue Searcy AR 72143	40014	12/06/2006	AR	N/A
Med Arts JVIC 9101 Franklin Square Drive Baltimore MD 21237	1932167178	12/06/2006	MD	N/A
Memorial Hermann Southwest OPID 7797 SW Freeway Houston TX 77074	741152597	12/06/2006	TX	N/A
Twin County Regional Hospital 200 Hospital Drive Galax VA 24333	1174524094	12/06/2006	VA	N/A
Marion Ancillary Services LLC 1040 Delaware Avenue Marion OH 43302	991	12/06/2006	OH	N/A
RDI/OMHS Breckenridge Breckenridge Diagnostics Owensboro KY 42301	180038	12/06/2006	KY	1020 Breckenridge Street
NSMS - Darlington, WI 209 Limestone Pass Cottage Grove WI 53527	92420	12/06/2006	WI	N/A
Santa Fe Imaging,LLC 1640 Hospital Drive Santa Fe NM 87505	400521037	12/06/2006	NM	N/A
Suncoast Imaging of Port Orange 1680 Dunlawton Avenue Port Orange FL 32127	40370B	12/06/2006	FL	N/A
Carson Tahoe Regional Healthcare 2874 N Carson Street 3rd Floor Carson City NV 89706	290019	12/06/2006	NV	N/A
St. Francis Hospital & Health Centers 1201 Hadley Road Mooresville IN 46158	1457354318	12/06/2006	IN	N/A
Las Colinas Cancer Center 7415 Las Colinas Boulevard Irving TX 75063	00J062	12/06/2006	TX	N/A
ADI 4006 Johnathan Street Waterloo IA 50701	I15454	12/06/2006	IA	N/A
St Francis Hospital & Health Centers South 8111 S. Emerson Avenue Indianapolis IN 46237	1457354318	12/06/2006	IN	N/A
Central Baptist Diagnostic Center 100 Southland Drive Lexington, KY 40503	9375001	06/14/2006	KY	Suite B
Baptist Health Medical Center - NLR PET/CT 3500 Springhill Drive North Little Rock, AR 72117	5F437	05/03/2006	AR	Suite 100
Commonwealth Hematology Oncology 216 Southtown Drive Danville, KY 40422	1285687178	03/21/2007	KY	N/A
Commonwealth Hematology Oncology95 Bogle Office Park Drive Somerset, KY 42503	1285687178	03/21/2007	KY	N/A
UPMC and The Washington Hospital Cancer Center 155 Wilson Avenue Washington PA 15301	105589VXB	03/10/2006	PA	N/A
Lexington Diagnostic Center 1725 Harrodsburg Road, Suite 100 Lexington, KY 40504	0406	03/08/2006	KY	N/A
UW PET Imaging Center 8007 Excelsior Drive Madison, WI 53717	1346266319	04/03/2007	WI	N/A
Fort Wayne Medical Oncology and Hematology 7910 W. Jefferson Boulevard, Suite 107 Ft. Wayne, IN 46804	055770	04/23/2007	IN	N/A
Danbury Hospital 24 Hospital Avenue Danbury, CT 06810	070033	04/23/2007	CT	N/A
Reno Diagnostic Centers 590 Eureka Avenue Reno, NV 89512	1518904994	04/24/2007	NV	N/A
The Kirklin Clinic PET-CT Facility 2000 6th Avenue South Birmingham, AL 35233	1093768723	05/07/2007	AL	N/A
Pet Imaging Radiology, PSC 100 Paseo San Pablo Suite 208 Edificio Drive Arturo Cadilla Bayamon, PR - 00961	0085142	05/15/2007	PR	N/A
Punxsutawney Area Hospital 81 Hillcrest Drive Punxsutawney, PA 15767	390199	05/15/2007	PA	N/A
Princeton Baptist Medical Center 701 Princeton Avenue SW Birmingham , AL 35211	35211	05/30/2007	AL	N/A
Medical Arts Radiology Commack 55 Veterans Memorial Hwy Commack, NY 11725	W11682	05/31/2007	NY	N/A
Jewish Hospital-Bluegrass Avenue 1460 Bluegrass Avenue Louisville KY 40215	18-0040	06/05/2007	KY	N/A
Personal Care Molecular Imaging 1514 Highway 138 Wall, NJ 07719	109631	06/06/2007	NJ	N/A
Lincoln Radiology Imaging 7121 Stephanie Lane Lincoln, NE 68516	099920	06/06/2007	NE	N/A
Medcenter One 300 North 7th Street Bismark, ND 58506-5525	1538245634	07/24/2007	ND	N/A
Wheaton Franciscan Healthcare-All Saints 3801 Spring Street Racine, WI 53405	520096	08/08/2007	WI	N/A
Diagnostic Centers of America 6080 Boynton Boulevard, Suite 140 Boynton Beach, FL 33437	E4439	08/22/2007	FL	N/A
Center for Integrative Cancer Medicine, P.A 1733 Curie Drive Suite 305 El Paso TX 79902	00315U	08/22/2007	TX	N/A
St. Luke's Hospital 1026 A Avenue N.E. Cedar Rapids, IA 52406-3026	160045	08/22/2007	IA	N/A
Shared PET Imaging, LLC - Cincinnati OH Eden Avenue & Albert Sabin Way Cincinnati OH 45219	ID01511	08/22/2007	OH	N/A
Integrated Magnetic Imaging 7100 University Court Montgomery, AL 36117	7811	08/22/2007	AL	N/A
Northwest PET Imaging 265 N Broadway Street Portland OR 97227	105512	08/22/2007	OR	N/A
Center for Diagnostic Imaging - St. Louis Park 5775 Wayzata Boulevard. St. Louis Park MN 55416 #190	C01307	08/22/2007	MN	N/A
Ponca City Medical Center 1900 North 14th Street Ponca City Ok 74601	370006	08/22/2007	OK	N/A
Sanford Health 1305 W. 18th Street Sioux Falls SD 57117	430027	08/22/2007	SD	N/A
Central Valley PET Imaging 4744 Quail Lake Drive Stockton CA 95207	00A484230	08/22/2007	CA	N/A
PET/CT Imaging Center 4000 N. Illinois Lane Swansea IL 62226	201339	08/22/2007	IL	PET/CT Imaging Center
Memorial Medical Center 1105 W. Frank Avenue, Suite 100 Lufkin TX 75901	450211	08/22/2007	TX	DBA Temple Imaging Center

Facility Name	Provider Number	Date Approved	State	Other Information
Rockingham Memorial Hospital 235 Cantrell Avenue Harrisonburg VA 22801	490004	08/22/2007	VA	N/A
Regions Imaging Center 401 Phalen Boulevard, 41101C St. Paul MN 55101	240106	08/22/2007	MN	N/A
Florida Hospital Imaging LLC335 Clyde Morris Boulevard, Suite 250 Ormond Beach FL 32174	1104876358	08/22/2007	FL	N/A
Hutchinson Clinic PA 2101 North Waldron Street Hutchinson KS 67502	1043298474	08/22/2007	KS	N/A
Parkwest Imaging 3676 Parker Boulevard Pueblo CO 81008	455838	08/22/2007	CO	N/A
St. Clair Hospital/UPMC Cancer Center PET/CT 1000 Bower Hill Road Pittsburgh PA 15243	1699708792	08/22/2007	PA	N/A
St. Joseph Mercy Oakland (SJMO) 44405 Woodward Avenue Pontiac MI 48341	1457354318	08/22/2007	MI	N/A
Edward Hospital 801 S Washington Street Naperville IL 60540	140231	08/22/2007	IL	N/A
East Montgomery Imaging Center 6880 Winton Blount Boulevard Montgomery AL 36117	58866	08/22/2007	AL	N/A
Memorial Hospital of Martinsville & Henry County 320 Hospital Drive Martinsville VA 24112	490079	08/22/2007	VA	N/A
Thomas Hospital 750 Morphy Avenue Fairhope AL 36532	10100	08/22/2007	AL	N/A
Portland Adventist Medical Center 10123 SE Market Street Portland OR 97216	380060	08/22/2007	OR	N/A
Nash Healthcare System Inc. 2460 Curtis Ellis Drive Rocky Mount NC 27804	340147	08/22/2007	NC	N/A
North Broward Medical Center 201 E Sample Road Deerfield Beach FL 33064	100068	08/22/2007	FL	Radiology
Jennie Stuart Medical Center 320 West 18th Street Hopkinsville KY 42240	180051	08/22/2007	KY	N/A
Greater Houston Imaging, L.P.6565 West Loop South, Ste. 100 Bellaire TX 77401	FTNPX1	08/22/2007	TX	N/A
Sunrise Hospital Medical Center 3186 South Maryland Parkway Las Vegas NV 89109	290003	08/22/2007	NV	N/A
The Diagnostic and Treatment Center 3401 Cranberry Boulevard Weston WI 54476	92450	08/22/2007	WI	N/A
Ochsner Medical Center1514 Jefferson Highway New Orleans LA 70121	720502505	08/22/2007	LA	N/A
Inland Empire Medical Imaging 225 W. Hospitality Lane, Suite #100 San Bernardino CA 92408	zzz316682	08/22/2007	CA	N/A
Independent Nuclear PET Imaging 1115 N. Parrott Avenue Okeechobee FL 34972	1922070796	08/22/2007	FL	N/A
Hugh Chatham Memorial Hospital 180 Parkwood Drive Elkin NC 28621	340097	08/22/2007	NC	N/A
Marian Medical Center/Plaza Diagnostic Imaging 525 E. Plaza Drive Santa Maria CA 93454	50107	08/22/2007	CA	N/A
DDIS-FH 8002 Kew Gardens Road Kew Gardens NY 11415	687s41	08/22/2007	NY	N/A
NYPH-Weill Cornell 525 E 68th Street New York NY 10021	131623978	08/22/2007	NY	N/A
Genesys Regional Medical Center One Genesys Parkway Grand Blanc MI 48439-8066	230197	08/22/2007	MI	N/A
Geisinger Medical Center 100 North Academy Avenue Danville PA 17822	390006	08/22/2007	PA	N/A
Citrus Diagnostic Center 922 N Citrus Avenue Crystal River FL 34428	K5374	08/22/2007	FL	N/A
Middlesex Hospital 534 Saybrook Road Middletown CT 6457	70020	08/22/2007	CT	N/A
Geisinger Wyoming Valley Medical Center 1000 East Mountain Drive Wilkes-Barre PA 18711	390270	08/22/2007	PA	N/A
Canton, IL - Northern Shared Medical Services 209 Limestone Pass Cottage Grove WI 53527	208196	08/22/2007	WI	N/A
Self Regional Healthcare 102 Academy Street Greenwood SC 29646	420071	08/22/2007	SC	N/A
Bristol Hospital Brewster Road Bristol CT 6011	70029	08/22/2007	CT	P.O. Box 977
East Texas Hematology & Oncology Clinic, P.A. 1202 West Frank Avenue Lufkin TX 75904	00T37K	08/22/2007	TX	N/A
St. John River District Hospital 4100 River Road East China MI 48054	230241	08/22/2007	MI	N/A
Morgan Hospital 2209 John R Wooden Drive Martinsville IN 46151	150038	08/22/2007	IN	N/A
Cotton-O'Neil Cancer Center 1414 SW 8th Street Topeka KS 66606	1811944457	08/22/2007	KS	N/A
Barnes-Jewish West County Hospital 12634 Olive Boulevard St Louis MO 63141	260162	08/22/2007	MO	N/A
Hardin Memorial Hospital 913 North Dixie Avenue Elizabethtown KY 42701	180012	08/22/2007	KY	N/A
Cancer Institute of Florida, LLC 894 E. Altamonte Drive Altamonte Springs FL 32701	72793	08/22/2007	FL	N/A
Community Hospital, New Port Richey 5637 Marine Parkway New Port Richey FL 34652	100191	08/22/2007	FL	N/A
Pulaski Community Hospital 2400 Lee Highway Pulaski VA 24301	490116	08/22/2007	VA	N/A
Advocate South Suburban Hospital 17800 S. Kedzie Avenue Hazel Crest IL 60429	3.62169E+11	08/22/2007	IL	N/A
St. Vincent's Medical Center 2800 Main Street Bridgeport CT 6606	70028	08/22/2007	CT	N/A
Cayuga Medical Center @ Ithaca 101 Dates Drive Ithaca NY 14850	330307	08/22/2007	NY	N/A
Immanuel-ST Josephs Mayo Health Stystem 1025 Marsh Street Mankato MN 56002-8673	240093	08/22/2007	MN	PO Box 8673
Kell West Regional Hospital 5420 Kell West Boulevard Wichita Falls TX 76310	450827	08/22/2007	TX	N/A
Aurora Medical Center Kenosha 10400 75th Street Kenosha WI 53142	520189	08/22/2007	WI	N/A
Aurora Lakeland Medical Center W3985 County Road NN Elkhorn WI 53121	520102	08/22/2007	WI	N/A
Munson Medical Center 1105 Sixth Street Traverse City MI 49684	230097	08/22/2007	MI	N/A
Kansas City Cancer Center – North 8700 Greenhills Road Kansas City MO 64154	5650000E	08/22/2007	MO	N/A
PET Imaging Center of Maine 885 Union Street, Suite 115 Bangor ME 4401	10211501	08/22/2007	ME	N/A
SMS - Chester, IL 1900 State Street Chester IL 62233	208196	08/22/2007	IL	N/A
PET of Reston, L.P. 1800 Town Center Drive, Suite 115 Reston VA 20190	G01960P03	08/22/2007	VA	N/A
Healthcare Imaging Center 4334 Central Avenue Riverside CA 92506	ZZZ14451Z	08/22/2007	CA	N/A
Robert Wood Johnson University Hospital @ Hamilton 1 Hamilton Health Place Hamilton NJ 8690	310110	08/22/2007	NJ	N/A
Northside Hospital 1000 Johnson Ferry Road Atlanta GA 30342	110161	08/22/2007	GA	N/A
Partners Imaging Center of Sarasota 1250 S. Tamiami Trail, Suite 103 Sarasota FL 34239	Q0353	08/22/2007	FL	N/A
Memorial Medical Center 216 Sunset Place Neillsville WI 54456	521323	08/22/2007	WI	N/A
Central Virginia Imaging, LLC 1900 Tate Spings Road Suite 21 Lynchburg VA 24501	1578594412	08/22/2007	VA	N/A

Facility Name	Provider Number	Date Approved	State	Other Information
Los Alamitos Medical Center 3951 Katella Avenue Los Alamitos CA 90720	50551	08/22/2007	CA	N/A
Valley Advanced Imaging, LLC 2403 Butler Street Easton PA 18042	1417907023	08/22/2007	PA	N/A
Good Samaritan PET/CT and Imaging Services 1245 Montauk Hwy West Islip NY 11795	330286	08/22/2007	NY	N/A
Scotland Memorial Hospital 500 Lauchwood Drive Laurinburg NC 28352	340008	08/22/2007	NC	N/A
McFarland Clinic, P.C.1111 Duff Avenue Ames IA 50010	1639135643	08/22/2007	IA	N/A
Providence Hospital 1150 Varnum Street NE Washington DC 20017	90006	08/22/2007	DC	N/A
The Angeles Clinic and Research Institute 11818 Wilshire Boulevard Ste 200 Los Angeles, CA 90025	W15185A	08/22/2007	CA	N/A
Rose Radiology Centers, Inc 5107 N Armenia Avenue Tampa FL 33603	1629162904	08/22/2007	FL	Bldg B
Texas Oncology East Houston 13111 East Freeway Houston TX 77015	1811944101	08/22/2007	TX	N/A
NSMS - St. Joe's - Breese, IL 9515 Holy Cross Lane Breese IL 62230	208196	08/23/2007	IL	N/A
UT Cancer Institute 7945 Wolf River Boulevard Germantown TN 38138	3711381	08/23/2007	TN	N/A
Fresno Imaging Center 6191 N. Rhesta Avenue Fresno CA 93710	N/A	08/23/2007	CA	N/A
Imaging Consultants Inc. @ Sturdy Memorial 211 Park Street Attleboro MA 2703	327085	08/23/2007	MA	N/A
Fairfax Pet Imaging Center, LLC 8503 Arlington Boulevard, Lower level Fairfax VA 22031	1861433674	08/23/2007	VA	N/A
City Hospital Inc. 2500 Hospital Drive Martinsburg WV 25401	510008	08/23/2007	WV	N/A
White Plains Radiology Associates PET Center Davis and Post Road White Plains NY 10601	w11842	08/23/2007	NY	N/A
Lenoir Memorial Hospital 100 Airport Road Kinston NC 28503-1678	1962446385	08/23/2007	NC	N/A
Sand Lake Imaging 9350 Turky Lake Road Orlando FL 32819	34896	08/23/2007	FL	SUITE 100
Advocate Lutheran General Center For Advanced Care 1800 Luther Lane Park Ridge IL 60068	140223	08/23/2007	IL	N/A
Flower Hospital 5200 Harroun Road Sylvania OH 43560	360074	08/23/2007	OH	N/A
Dekalb Memorial Hospital 1316 E 7th Street Auburn IN 46706	N/A	08/23/2007	IN	N/A
St. John Hospital and Medical Center 1315 Macom Drive Naperville IL 60564	116	08/23/2007	IL	N/A
Bayhealth Medical Center 540 S. Governors Avenue Dover DE 19904	N/A	08/23/2007	DE	N/A
ImageCare 713 Troy-Schenectady Road Suite 124 Latham NY 12110	1922048370	08/23/2007	NY	Capital Region Health Park
Southside Regional Medical Center 801 South Adams Street Petersburg VA 23803	490067	08/23/2007	VA	N/A
East Alabama Medical Center-Auburn Diagnostic Imaging 1527 Professional Parkway Auburn AL 36830	29	08/23/2007	AL	N/A
Trover Health System 900 Hospital Drive Madisonville KY 42431	1457354318	08/23/2007	KY	N/A
Doctors Hospital at Renaissance, Ltd 5501 S. McColl Road Edinburg TX 78359	450869	08/23/2007	TX	N/A
Twin Lakes Imaging Center 1890 LPGA Boulevard Daytona Beach FL 32117	1023040870	08/23/2007	FL	Suite 110
Nathan Littauer Hospital 99 E State Street Gloversville NY 12078	330276	08/23/2007	NY	N/A
Altoona Regional Health System 620 Howard Avenue Altoona PA 16601	390073	08/23/2007	PA	N/A
Warren General Hospital 2 Crescent Park West Warren PA 16365	390146	08/23/2007	PA	N/A
Reid Hospital Health Care Services 1401 Chester Boulevard Richmond IN 47374	1457354318	08/23/2007	IN	N/A
Orange City Area Health System 1000 Lincoln Circle SE Orange City IA 51041	161360	08/23/2007	IA	N/A
Mercy Hospital Clermont 3000 Hospital Drive Batavia OH 45103	1457354318	08/23/2007	OH	N/A
Arroyo Grande Community Hospital 345 South Halcyon Road Arroyo Grande CA 93454	50016	08/23/2007	CA	N/A
HealthEast St. John's Hospital 1575 Beam Avenue Maplewood MN 55109	240210	08/23/2007	MN	N/A
St. Joseph's/Candler Health System 5353 Reynolds Street Savannah GA 31405	110024	08/23/2007	GA	N/A
NSMS - Pickneyville, IL 101 North Walnut Street Pinckneyville, IL IL 62274	208196	08/23/2007	IL	N/A
Duke Raleigh Hospital 3400 Wake Forrest Road Raleigh NC 27609	340073	08/23/2007	NC	N/A
Advanced Radiology Services & The Center for Women 400 Plaza Court East Stroudsburg PA 18301	33012	08/23/2007	PA	Suite C
Community Hospital 10020 Donald S. Powers Drive Munster IN 46321	140125	08/23/2007	IN	N/A
Avant Imaging-Woodland Health Center 7575 Grand River Avenue Brighton MI 48114	1457354318	08/23/2007	MI	N/A
EVDI Medical Imaging - East Mesa 6424 E. Broadway Road Mesa AZ 85206	1164434098	08/23/2007	AZ	Suite 101
NSMS - St. Louis, Mo - ARCH Medical 209 Limestone Pass Cottage Grove WI 53527	47013	08/23/2007	WI	N/A
CNY PET LLC 5100 West Taft Road Liverpool NY 13088	AA0672	08/23/2007	NY	Suite 2C
MCMI 3000 Telegraph Avenue Oakland CA 94609	ZZZ27496Z	08/23/2007	CA	N/A
Green Clinic LLC 1200 S. Farmerville Street Ruston LA 71270	57387	08/23/2007	LA	N/A
Fayette Memorial Hospital 3542 North Western Avenue Connersville IN 47331	150064	08/23/2007	IN	N/A
Carolinas Medical Center-Union 600 Hospital Drive Monroe NC 28112	340130	08/23/2007	NC	Nuclear Medicine Department
Citrus Medical Imaging Associates Inc.1000 Lakes Drive Ste 170 West Covina CA 91790	HW2326	08/23/2007	CA	N/A
Radiation Oncology@WFUBMC Radiation Oncology Medical Center Boulevard Winston-Salem NC 27152	340047	08/24/2007	NC	Wake Forest University Baptist Medical Center Comprehensive Cancer Center
Harrison County Hospital 245 Atwood Street Corydon IN 47112	151331	08/24/2007	IN	N/A
Thibodaux Regional Medical Center 602 North Acadia Road Thibodaux LA 70301	190004	08/24/2007	LA	N/A
NSMS - Hot Springs, AR 1600 Higdon Ferry Road Hot Springs AR 71913	5F168	08/24/2007	AR	N/A
Pacific Oncology, PC 15700 SW Greystone Court Beaverton OR 97006	1043262116	08/24/2007	OR	N/A
Cancer Care Associates 1791 E. Fir Avenue Fresno CA 93720	222375652	08/24/2007	CA	N/A
Mass. Mobile PET, P.C. Newburyport 25 Highland Avenue Newburyport MA 1950	327086	08/24/2007	MA	N/A

Facility Name	Provider Number	Date Approved	State	Other Information
Hematology Oncology Associates of Illinois 6801 West 34th Street Berwyn IL 60402	218890	08/24/2007	IL	Suite 107
Mass. Mobile PET, P.C. Haverhill 140 Lincoln Avenue Haverhill MA 1830	327086	08/24/2007	MA	N/A
Corinth Medical Group 4851 I35 East Ste 101 Corinth TX 76210	00K22X	08/24/2007	TX	N/A
New England PET Imaging Manchester One Elliot Way Manchester NH 3103	327081	08/24/2007	NH	N/A
The Surgery Clinic 1026 Goodyear Avenue Gadsden AL 35999	N/A	08/24/2007	AL	Suite B-101
Boston Medical Center 830 Harrsion Avenue Boston MA 2118	220031	08/24/2007	MA	Suite 1600
Mercy Health Center 4190 24th Avenue Fort Gratiot MI 48059	1457354318	08/24/2007	MI	N/A
The Cancer Center of Santa Barbara 300 W Pueblo Street Santa Barbara CA 93105	W13890	08/24/2007	CA	N/A
Milford Memorial Hospital - Bayhealth Medical Ctr 21 W. Clarke Avenue Milford DE 19963	N/A	08/24/2007	DE	N/A
North Coast Cancer Care 417 Quarry Lakes Drive Sandusky OH 44870	NO9915215	08/24/2007	OH	N/A
Palm Beach Gardens Open Imaging Center 3335 Burns Road #101 Palm Beach Gardens FL 33408	U8767	08/24/2007	FL	N/A
Advanced Medical Imaging, LLC 1780 NW Myhre Road Silverdale WA 98383	AB24179	08/24/2007	WA	Suite 1220
Swedish American Hospital 1401 E State Street Rockford IL 61104	140228	08/24/2007	IL	N/A
Molecular Diagnostics of Eastern Omaha 117 North 32nd Avenue Ste 100 Omaha NE 68131	99894	08/24/2007	NE	N/A
Kingwood Medical Center 22999 U.S. Hwy 59 Kingwood TX 77339	1811942238	08/24/2007	TX	N/A
Health Village Imaging 1301 Route 72 West Manahawkin NJ 8050	1194810978	08/24/2007	NJ	Suite 100
ARH Hazard 100 Medical Center Drive Hazard KY 41701	520795508	08/24/2007	KY	N/A
Central Florida Imaging Center, Inc.6801 US 27 N, Suite E-3 Sebring FL 33870	1427076769	08/24/2007	FL	N/A
West Texas Cancer Center 301 N Washington Avenue Odessa TX 79761	00543K	08/24/2007	TX	N/A
Beloit Memorial Hospital 1969 West Hart Road Beloit WY 53511	520100	08/24/2007	WY	N/A
Pinnacle Imaging Center 2390 NW 7th Street Miami FL 33125	U5131	08/24/2007	FL	Suite 103
PET Imaging of El Paso 1225 E. Cliff Drive El Paso TX 79902	FTN035	08/24/2007	TX	Building 3 Suite 200
St. Petersburg General Hospital 6500 38th Avenue North St. Petersburg FL 33710	N/A	08/24/2007	FL	N/A
St. Mary Medical Center 1201 Langhorne-Newtown Road Langhorne PA 19047	390258	08/24/2007	PA	N/A
St Joseph Medical Center 1401 St Joseph Parkway Houston TX 77002	1154361475	08/24/2007	TX	N/A
UPMC Northwest 1671 Allegheny Boulevard Reno PA 16343	390091	08/24/2007	PA	N/A
Mercy Hospital Fairfield 3000 Mack Road Fairfield OH 45014	1457354318	08/24/2007	OH	N/A
Radiology Associates of West Pasco 5539 Marine Parkway New Port Richey FL 34652	1558328963	08/24/2007	FL	N/A
St. Dominic Hospital 969 Lakeland Drive Jackson MS 39216	250048	08/24/2007	MS	N/A
RCOA-Adventist Health-Sequoia 4949 W Cypress Avenue Visalia CA 93271	1427198696	08/24/2007	CA	N/A
McKee Medical Center 2000 Boise Avenue Loveland CO 80538	60030	08/24/2007	CO	N/A
Bon Secours Richmond Community Hospital 1500 North 28th Street Richmond VA 23223	490094	08/24/2007	VA	N/A
West Houston medical Center 12141 Richmond Avenue Houston TX 77082	450644	08/24/2007	TX	N/A
Shands Teaching Hospital and Clinics, Inc. 2000 SW Archer Road Gainesville FL 32608	100113	08/24/2007	FL	Radiology, Shands Medical Plaza
Tanner Medical Center 119 Cmbulance Drive Carrollton GA 30117	110011	08/24/2007	GA	N/A
OU Medical Center 700 NE 13th Street & Lincoln Boulevard Oklahoma City OK 73104	1780631390	08/24/2007	OK	N/A
The Medical Center of Aurora 1400 S. Potomac Street Aurora CO 80012	60100	08/24/2007	CO	#180
AllenRidge Diagnostic Imaging Center 520 Lecanto Hwy Lecanto FL 34461	100023	08/24/2007	FL	N/A
The P.E.T. Center at BWMC 305 Hospital Drive Baltimore MD 21061	1124016696	08/24/2007	MD	SUITE 302
Signet Diagnostic Imaging Services, LLC 8300 West Sunrise Boulevard Plantation FL 33322	E8667	08/24/2007	FL	N/A
Adams Diagnostic Imaging 20 Expedition Trail Gettysburg PA 17325	65290	08/24/2007	PA	Suite 102
Jennie Edmundson Hospital 933 E. Pierce Street Council Bluffs IA 51503	160047	08/24/2007	IA	N/A
Holy Cross Hospital 4725 N. Federal Highway Fort lauderdale FL 33308	100073	08/24/2007	FL	Bienes Diagnostic Imaging Center
Medical University of Ohio 3000 Arlington Avenue Toledo OH 43614	1457354318	08/24/2007	OH	N/A
Daviess Community Hospital 1314 E Walnut Street Washington IN 47501	150061	08/24/2007	IN	Radiology Department
Jeff Anderson Regional Medical Center 2124 14th Street Meridian MS 39301	250104	08/24/2007	MS	N/A
Modesto Imaging Center 157 E. Coolidge Avenue Modesto CA 95350	ZZZ01977Z	08/24/2007	CA	N/A
Sioux Center Commmunity Hospital and Health Center 605 South Main Avenue Sioux Center IA 51250	161346	08/24/2007	IA	N/A
Southern Ohio Medical Center 1121 Kinneys Lane Portsmouth OH 45662	360008	08/24/2007	OH	N/A
Massachusetts General Hospital 55 Fruit Street Boston MA 2114	220071	08/24/2007	MA	N/A
Clinton Memorial Hospital Regional Health System 31 Farquhar Avenue Wilmington OH 45177	316005307	08/24/2007	OH	N/A
CJW Medical Center 1401 Johnston Willis Drive Richmond VA 23235	34632	08/24/2007	VA	N/A
Texas Oncology Weatherford 907 Foster Lane Weatherford TX 76086	00539K	08/24/2007	TX	N/A
Sharper Imaging Diagnostic Radiology Center 3430 Tamiami Trail Port Charlotte FL 33952	1730288515	08/24/2007	FL	Suite B
Morristown-Hamblin Healthcare System 908 W 4th N Street Morristown TN 37814	1457354318	08/24/2007	TN	N/A
Puget Sound PET Imaging 6808 220th Street SW Mountlake Terrace WA 98043	115162600	08/24/2007	WA	Suite 150
DETAR HOSPITAL NAVARRO 506 E San Antonio Street Victoria TX 77902	450147	08/24/2007	TX	N/A
Pet Imaging of Chicago 6801 West 34th Street Suite 105 Berwyn IL 60402	214832	08/24/2007	IL	N/A

Facility Name	Provider Number	Date Approved	State	Other Information
Imaging Specialists Group, Ltd 3101 Churchill Road Flower Mound TX 75022	1417991852	08/24/2007	TX	Suite 100
OKOmed Downtown Imaging 2101 Crawford Street, Suite 115 Houston TX 77002	1780622464	08/24/2007	TX	N/A
Clear Lake Regional Medical Center 500 Medical Center Boulevard Webster TX 77598	1063466035	08/24/2007	TX	N/A
Norton Hospital 315 E. Broadway Louisville KY 40202	180088	08/24/2007	KY	N/A
Saratoga PET Associates LLC 3 Emma Lane Clifton Park NY 12065	1356357172	08/24/2007	NY	N/A
Genesis Health Care System 2800 Maple Avenue Zanesville OH 43701	1457354318	08/24/2007	OH	N/A
Lake Cumberland Regional Hospital 27 Imaging Drive Somerset KY 42503	1457354318	08/24/2007	KY	N/A
Saint Francis Cancer Institute 14 Doctors' Park Cape Girardeau MO 63703	260183	08/24/2007	MO	N/A
American Health Network of IN LLC PET/CT 6820 Parkdale Place Indianapolis IN 46254	1164491775	08/24/2007	IN	Suite #105
PET CT Nuclear Radiology, Inc. 1501 Edisicio Detantacourt, Ste 302 Fernadez Juncos Santorze PR 909	57886	08/24/2007	PR	Fernadez Juncos Santorze
NSMS - Reedsburg, WI 2000 North Dewey Street Reedsburg WI 53959	1295785079	08/24/2007	WI	N/A
Wayne Memorial Hospital 2700 Wayne Memorial Drive Goldsboro NC 27534	340010	08/24/2007	NC	N/A
InMed Diagnostic Services of IL 10419 Fleming Road Carterville IL 62918	205040	08/24/2007	IL	N/A
Henrico Doctors' Hospital 1602 Skipwith Road Richmond VA 23229	490118	08/24/2007	VA	N/A
Alliance Imaging - United General Hospital 2000 Hospital Drive Sedro Woolley WA 98284	8862377	08/24/2007	WA	N/A
Spencer Municipal Hospital 1200 First Avenue East Spencer IA 51301	1255328621	08/24/2007	IA	N/A
Radilogy LTD LaCholla Ctr Diag. Imaging 5960 N LaCholla Avenue Tucson AZ 85704	1841261989	08/24/2007	AZ	N/A
Saint Elizabeth Regional Medical Center 555 South 70th Street Lincoln NE 68510	280020	08/24/2007	NE	N/A
Bucyrus Community Hospital 629 N Sandusky Avenue Bucyrus OH 44820	361316	08/24/2007	OH	N/A
Mercy Hospital of Willard 110 E. Howard Street Willard OH 44890	361310	08/24/2007	OH	N/A
Lower Columbia Pathologists 1606 East Kessler Boulevard Longview WA 98632	745800	08/24/2007	WA	4th Floor
Newton Medical Center 600 Medical Center Drive Newton KS 67114	170103A	08/24/2007	KS	N/A
Advanced Imaging Partners 508 Cleveland Street Great Bend KS 67530	1295791325	08/24/2007	KS	N/A
Integrated Medical Imaging 1040 Greenwood Springs Boulevard Greenwood IN 46143	221970	08/24/2007	IN	N/A
Avera Sacred Heart Cancer Center 501 Summit StreetYankton SD 57078	430012	08/24/2007	SD	N/A
ValleyCare Medical Center 5555 W. Las Positas Boulevard Pleasanton CA 94588	50283	08/24/2007	CA	N/A
NSMS - Mena, AR 311 North Morrow Street Mena AR 71953	1295785079	08/24/2007	AR	N/A
Memorial Hospital Easton 219 S. Washington Street Easton MD 21601	210037	08/24/2007	MD	N/A
Seattle Cancer Care Alliance 825 Eastlake Avenue E Seattle WA 98109	500138	08/24/2007	WA	Medical Imaging
Alliance Imaging - The Vancouver Clinic 700 NE 87th Avenue Vancouver WA 98664	8864364	08/24/2007	WA	N/A
Martin Center for Diagnostic and Imaging Services 3901 S. Fremont Avenue Springfield MO 65804	260040	08/24/2007	MO	N/A
Aultman Hospital 2600 Sixth Street SW Canton OH 44710	1457354318	08/24/2007	OH	N/A
Imaging Consultants Inc. @ Harrington Memorial 600 Federal Street Andover MA 1810	327085	08/24/2007	MA	N/A
Rhode Island Pet Services @ Kent County 600 Federal Street Andover MA 1810	1538113113	08/24/2007	MA	N/A
Imaging Consultants Inc. @ Hawthorn 600 Federal Street Andover MA 1810	1851449078	08/24/2007	MA	N/A
Swedish Covenant Hospital 5145 N California Avenue Chicago IL 60625	362179813	08/24/2007	IL	N/A
Banner Baywood Medical Center 6644 E. Baywood Avenue Mesa AZ 85206	30088	08/24/2007	AZ	N/A
Lourdes Hospital 1530 Lone Oak Road Paducah KY 42003	1346244126	08/24/2007	KY	N/A
St Vincent Oncology Center 8301 Harcourt Road Indianapolis IN 46260	150084	08/24/2007	IN	N/A
United Hospital System Inc 9555 76th Street Pleasant Prairie WI 53518	520021	08/24/2007	WI	N/A
East Tennessee Diagnostic Center 1450 Dowell Springs Boulevard. Ste. 210 Knoxville TN 37909	1710932553	08/24/2007	TN	N/A
Nazareth Hospital 8400 Roosevelt Boulevard Philadelphia PA 19152	390204A	08/24/2007	PA	N/A
Good Samaritan Hospital 2425 Samaritan Drive San Jose CA 95124	50380	08/24/2007	CA	N/A
MedSpecialists Imaging Center 1064 Keene Road Dunedin FL 34698	AB585	08/24/2007	FL	N/A
NSMS - Pekin, IL 2355 Broadway Road Pekin IL 61544	1295785079	08/24/2007	IL	N/A
Bluegrass Regional Imaging, LLC 701 Bob-O-Link Drive Lexington KY 40504	1871542670	08/24/2007	KY	Suite 245
Fairfax PET CT Imaging Center 8503 Arlington Boulevard Fairfax VA 22031	166599	08/24/2007	VA	Suite 120LL
Lodi Community Hospital 225 Elyria Street Lodi OH 44254	361303	08/24/2007	OH	N/A
Legacy Meridian Park Hospital 19260 SW 65th Avenue, Suite 165 Tualatin OR 97062	380089	08/24/2007	OR	N/A
Galion Community Hospital 269 Portland Way South Galion OH 44833	361325	08/24/2007	OH	N/A
Oncology Hematology Associates of Central Illinois 8940 N. Wood Sage Road Peoria IL 61615	616880	08/24/2007	IL	N/A
Mid Ohio Oncology/Hematology, Inc. 3100 Plaza Properties Boulevard Columbus OH 43219	1376509661	08/24/2007	OH	N/A
Kentucky Imaging Center 3475 Richmond Road Lexington KY 40509	1992876981	08/24/2007	KY	Suite 150
Salem Community Hospital 1995 East State Street Salem OH 44460	1639131535	08/24/2007	OH	N/A
Belmont Community Hospital 51339 National Road St. Clairsville OH 43950	360153	08/24/2007	OH	N/A
Golder CT and MRI Center Odessa TX 79761	N/A	08/24/2007	TX	N/A
NSMS - Reedsburg, WI 2000 North Dewey Street Reedsburg WI 53959	1295785097	08/24/2007	WI	N/A
MaineGeneral Medical Center 361 Old Belgrade Road Augusta ME 4330	200039A	08/24/2007	ME	N/A
The Oklahoma PET Center PLLC 5401 N. Portland Avenue, Ste 330 Oklahoma City OK 73112	569959716M	08/24/2007	OK	N/A
NSMS - Blytheville, AR 1520 North Division Street Blytheville AR 72316	1295785079	08/24/2007	AR	N/A

Facility Name	Provider Number	Date Approved	State	Other Information
NSMS - Benton, AR 1 Medical Park Benton AR 72015	1295785079	08/24/2007	AR	N/A
Mercy Health System 1000 Mineral Point Avenue Janesville WI 53548	520066	08/24/2007	WI	N/A
WA Foote Memorial Hospital 205 N. East Avenue Jackson MI 49201	230092	08/24/2007	MI	N/A
Northern Michigan Hospital 416 Connable Avenue Petoskey MI 49770	230105	08/24/2007	MI	N/A
Anchor Health Centers 800 Goodlette Road N. Naples FL 34102	1174571608	08/24/2007	FL	Suite 130
New Ulm Medical Center 1324 5th North Street New Ulm MN 56073	2880	08/24/2007	MN	N/A
Radiology Associates of Brooklyn LLP 2021 Avenue x Brooklyn NY 11235-2905	1134244916	08/24/2007	NY	N/A
NYOH Mobile PET/CT Hudson 69 Prospect Road Hudson NY 12534	1609863448	08/24/2007	NY	N/A
Integris Bass Baptist Health Center 600 South Monroe Street Enid OK 73703	1144236571	08/24/2007	OK	N/A
Imaging Consultants Inc @ Weymouth Woods 59 Performance Drive Weymouth MA 2188	1487690335	08/24/2007	MA	N/A
St. Vincent Medical Center 2131 W. Third Street Los Angeles CA 90057	50502	08/24/2007	CA	N/A
Caritas PET Imaging, LLC at Holyoke Medical Center 575 Beech Street Holyoke MA 1040	327087	08/24/2007	MA	N/A
St. James Healthcare 400 South Clark Street Butte MT 59701	270017	08/24/2007	MT	N/A
Inglewood Imaging Center 211 N. Prairie Avenue Inglewood CA 90301	TD097	08/24/2007	CA	N/A
Duncan Regional Hospital 1700 Whisenant Drive Duncan OK 73534	370023	08/24/2007	OK	PO Box 100
OhioHealth Ambulatory PET/CT 500 Thomas Lane Columbus OH 43214	360006	08/24/2007	OH	N/A
Baylor Diagnostic Imaging Center at Junius 3900 Junius Street, Suite 100 Dallas, TX 75246	450021	08/24/2007	TX	N/A
PET/CT Imaging at White Marsh 9900 Franklin Square Drive, Suite D Nottingham, MD 21236	FMNX01	08/28/2007	MD	N/A
Central Baptist Diagnostic Center 100 Southland Drive Lexington, KY 40503	9375001	06/14/2006	KY	Suite B
Baptist Health Medical Center - NLR PET/CT 3500 Springhill Drive North Little Rock, AR 72117	5F437	05/03/2006	AR	Suite 100
Commonwealth Hematology Oncology 95 Bogle Office Park Drive Somerset, KY 42503	1285687178	03/21/2007	KY	N/A
Commonwealth Hematology Oncology 216 Southtown Drive Danville, KY 40422	1285687178	03/21/2007	KY	N/A
Jefferson Center City Imaging 850 Walnut Street Philadelphia, PA 19107	66277	09/07/2007	PA	N/A
EPIC Imaging Center 233 NE 102 Avenue Portland OR 97220	0000WCGNQ	09/11/2007	OR	N/A
UPMC and The Washington Hospital Cancer Center 155 Wilson Avenue Washington PA 15301	105589VXB	03/10/2006	PA	N/A
Lexington Diagnostic Center 1725 Harrodsburg Road, Ste 100 Lexington, KY 40504	0406	03/08/2006	KY	N/A
UW PET Imaging Center 8007 Excelsior Drive Madison, WI 53717	1346266319	04/03/2007	WI	N/A
NorCal Imaging – Oakland 3200 Telegraph Avenue Oakland CA 94609	ZZZ05319Z	08/22/2007	CA	N/A
NorCal Imaging - Walnut Creek 114 La Casa Via, Suite #100 Walnut Creek CA 94598	ZZZ05319Z	08/22/2007	CA	N/A
Aurora Sheboygan Memorial Imaging Center 2629 North 7th Street Sheboyan, WI 53083	520035	05/08/2008	WI	
Aurora Memorial Hospital of Burlington 252 Mc Henry Street Burlington, WI 53105	520059	05/08/2008	WI	
Aurora Medical Center - Manitowoc County 5000 Memorial Drive Two Rivers, WI 54241	520034	05/08/2008	WI	
St. Mary's Medical Center 2900 First Avenue Huntington, WV 25702	510007	01/29/2009	WV	
Lenox Hill Radiology & Medical Imaging 61 East 77th Street New York NY 10021	W16681	01/29/2009	NY	
NSMS - Greenville, IL 200 Health Care Drive Greenville IL 62246	208196	01/29/2009	IL	
Medical Outsourcing Services LLC-Christie Clinic 1801 West Windsor Road Champaign IL 61821	211224	01/29/2009	IL	
Dakota Radiology 2929 Fifth Street, First Floor Rapid City SD 57701	1306892708	01/29/2009	SD	
Coffeyville Regional Medical Center 1400 West Fourth Street Coffeyville KS 67337	1285600379	01/29/2009	KS	
St. Mary Medical Center 1201 Langhorne-Newtown Road Langhorne PA 19047	390258	01/29/2009	PA	
Medical Imaging Center at Windsor Oaks 1901 SE 18th Avenue, Bldg 200A Ocala FL 34471	97993	01/29/2009	FL	
Alliance Imaging 2000 Hospital Drive Sedro-Woolley WA 98284	8862377	01/29/2009	WA	
Watauga Medical Center 336 Deerfield Road Boone NC 28607	340051	01/29/2009	NC	
Medical Outsourcing Services LLC 315 W. Old Key Drive Peru IN 46970	223260	01/29/2009	IN	
Contemporary Imaging Associates 19900 Haggerty Road., Suite 101 Livonia MI 48152	ON63450	01/29/2009	MI	
Greenwich Hospital 5 Perryridge Road Greenwich CT 06830	70018	01/29/2009	CT	
SMDC Health Systems 400 East Third Street Duluth MN 55805	8200	01/29/2009	MN	
Harris Regional Hospital 68 Hospital Road Sylva NC 28779	340016	01/29/2009	NC	
Community Memorial Hospital W180N8085 Town Hall Road Menomonee Falls WI 53051	1609822881	01/29/2009	WI	
LRI Lincoln Radiology Imaging 7121 Stephanie Lane Lincoln NE 68516	99920	01/29/2009	NE	
Bristol Hospital Brewster Road Bristol CT 06010	70029	01/29/2009	CT	
Mount Auburn Hospital 330 Mount Auburn Street Cambridge MA 02138	220002	01/29/2009	MA	
St. Mary's Medical Center 2900 First Avenue Huntington, WV 25702	510007	01/29/2009	WV	
American Fork Hospital 170 North 1100 East American Fork UT 84003	460023	01/29/2009	UT	
Kentucky Imaging Center 3475 Richmond Road, Suite 150 Lexington KY 40509	1992876981	01/29/2009	KY	
Bay Park Community Hospital 2801 Bay Park Drive Oregon OH 43616	1457354318	01/29/2009	OH	
Port Huron Hospital 1221 Pine Grove Avenue Port Huron MI 48060	1457354318	01/29/2009	MI	
Spring Branch Medical Center 8850 Long Point Road Houston TX 77055	450630	01/29/2009	TX	
Medical Outsourcing Services LLC 2210 Green Valley Road Suite 1 New Albany IN 47150	248140	01/29/2009	IN	
Medical Outsourcing Services LLC 355 Ridge Avenue Evanston IL 60202	211222	01/29/2009	IL	
Queens Hospital Center 82-68 164th Street Queens NY 11432	330231	01/29/2009	NY	

Facility Name	Provider Number	Date Approved	State	Other Information
NYOH Mobile PET/CT Amsterdam 1700 Riverfront Center Amsterdam NY 12010	1609863448	01/29/2009	NY	
Providence Everett Medical Center 1717 13th Street Everett WA 98201	500014	01/29/2009	WA	
University of Miami/Sylvester Cancer Center 1475 NW 12th Avenue Miami FL 33136	100079	01/29/2009	FL	
St. Mary's Hospital Medical Center 1726 Shawano Avenue Green Bay WI 54303	520097	01/29/2009	WI	
Brazosport Regional Health System 100 Medical Drive Lake Jackson TX 77566	450072	01/29/2009	TX	
Medical Outsourcing Services LLC 1025 Maine Street Quincy IL 62301	211224	01/29/2009	IL	
The Imaging Center 499 Gloster Creek Village, Suite G1 Tupelo MS 38801	1417907536	01/29/2009	MS	
NSMS - Forrest City, AR 1601 Newcastle Road Forrest City AR 72336	1295785079	01/29/2009	AR	
Glendale Adventist Medical Center 1509 Wilson Terrace Glendale CA 91206	1831188275	01/29/2009	CA	
Mount Sinai Medical Center of Florida, Inc. 4300 Alton Road Miami Beach FL 33140	100034	01/29/2009	FL	
Cooper University Radiology 900 Centennial Boulevard Voorhees NJ 08043	17983	01/29/2009	NJ	
George Washington University Hospital 900 23rd Street, N.W. Washington DC 10021	90001	01/29/2009	DC	
Galesburg Cottage Hospital 695 N. Kellogg Street Galesburg IL	1447221312	01/29/2009	IL	
Central Florida Regional Hospital 1401 W. Seminole Boulevard. Sanford FL	100161	01/29/2009	FL	
Feather River Hospital 5974 Pentz Road Paradise CA	225	01/29/2009	CA	
Caritas PET Imaging, LLC at Cooley Dickinson Hospital 30 Locust Street Northampton MA 67337	1285846410	01/29/2009	MA	
Shared PET Imaging, LLC for Garden City Hospital 272 West Warren Street Dearborn Heights MI	1457354318	01/29/2009	MI	
Florida Hospital Heartland Division -Sebring Fl 4200 Sun N Lake Boulevard Sebring FL 98284	100109	01/29/2009	FL	
Good Samaritan Regional Center 700 E Norwegian Street Pottsville PA	1427050376	01/29/2009	PA	
Austin Pet and Imaging Center 11044 Research Boulevard, D-100 Austin TX 78759	1518928787	01/29/2009	TX	
Ukiah Valley Medical Center 275 Hospital Drive Ukiah CA 95482	50301	01/29/2009	CA	
Longmont United Hospital 418 E. College Drive Cheyenne WY 82007	60003	01/29/2009	WY	
Grove City Medical Center 631 N Broad Street Grove City PA 16127	1023000296	01/29/2009	PA	
Fulton Center Health Center 34555 Chagrin Boulevard Cleveland OH 43567	361333	01/29/2009	OH	
NSMS - Fairfield, IL 303 NW 11th Street Fairfield IL 62837	1295785097	01/30/2009	IL	
St Helena Hospital 10 Woodland Road St Helena CA 94574	50013	01/30/2009	CA	
Bayshore Medical Center 4000 Spencer Hwy Pasadena TX 77504	1174576698	01/30/2009	TX	
RedBud Community Hospital 15630 18th Avenue Clearlake CA 95422	51317	01/30/2009	CA	
Taylor Regional Hospital 125 Greenbriar Drive Campbellsville KY 42718	180087	01/30/2009	KY	
St. Mary's Medical Center 901 St. Mary's Drive Evansville IN 47750	150100	01/30/2009	IN	
RUSH University Medical Center 1750 W Harrison, Jones 106 Chicago IL 60612	1932213600	01/30/2009	IL	
Parkview Molecular Imaging 2428 Santa Monica Boulevard, Suite #302 Santa Monica CA 90404	G17328A	01/30/2009	CA	
Progressive Imaging Center 36 Newark Avenue, Suite 100 Belleville NJ 07109	606918	01/30/2009	NJ	
InSight Diagnostic Center 1121 8th Avenue Fort Worth TX 76104	1932166105	01/30/2009	TX	
Monongahela Valley Hospital 1163 Country Club Road Monongahela PA 15063	390147	01/30/2009	PA	
Florida Cancer Specialists/Del Prado 811 Del Prado Boulevard Cape Coral FL 33990	1760590962	01/30/2009	FL	
MPHS 100 S. San Mateo Drive San Mateo CA 94403	50007	01/30/2009	CA	
Griffin Hospital 130 Division Street Derby CT 6418	70031	01/30/2009	CT	
West Jefferson Medical Center 1101 Medical Center Boulevard Marrero LA 70072	190039	01/30/2009	LA	
Mercy Hospital of Tiffin 485 West Market Street Tiffin OH 44883	360089	01/30/2009	OH	
Dr. Haroutioun S. Shahinian 10767 Gateway W El Paso TX 79935	1639184005	01/30/2009	TX	
Holston Valley Medical Center 130 W Ravine Road Kingsport TN 37660	1457354318	01/30/2009	TN	
Pinnacle Health Imaging at West Hanover 8012 Bretz Drive Harrisburg PA 17112	390067	01/30/2009	PA	
Indian Path Medical Center 2205 Pavilion Drive Kingsport TN 37660	1457354318	01/30/2009	TN	
Regional Medical Imaging 2486 Nerredia Street Flint MI 48532	1457354318	01/30/2009	MI	
Modesto Radiology Imaging 1524 McHenry Avenue Suite 100 Modesto CA 95350	ZZZ18519Z	01/30/2009	CA	
Texas Cancer Clinic 9102 Floyd Curl Drive San Antonio TX 78240	1316944655	01/30/2009	TX	
Mercy Anderson Hospital 7500 State Road Cincinnati OH 45255	1457354318	01/30/2009	OH	
Henry Ford Macomb 15855 Nineteen Mile Road Clinton Twp MI 48038	1457354318	01/30/2009	MI	
Kennedy Outpatient Medical Imaging 900 Medical Center Drive Sewell NJ 08080	310086	01/30/2009	NJ	
Memorial Hermann Northeast 18955 Memorial North Humble TX 77338	450684	01/30/2009	TX	
Comprehensive Cancer Center;Cancer Specialists OK 3525 NW 56th Street, C150 OKC OK 73112	1013090075	01/30/2009	OK	
RIS Lakeland 1305 Lakeland Hills Boulevard Lakeland FL 33805	584	01/30/2009	FL	
Bayshore Community Hospital 727 North Beers Street Holmdel NJ 07733	310112	01/30/2009	NJ	
Outpatient Radiology LLC 419 S. Washingont Street, Suite 101 Casper WY 82601	1396704474	01/30/2009	WY	
University Hospital and Medical Center 7201 North University Drive Tamarac FL 33321	1144274770	01/30/2009	FL	
University Cancer Center, Huntsville 640 Interstate 45 N Huntsville TX 77340	00Y285	01/30/2009	TX	
San Jacinto Methodist Hospital 4401 Garth Road Baytown TX 77521	450424	01/30/2009	TX	
University Cancer Center, Brenham 605 Medical Court 101 Brenham TX 77833	00Y285	01/30/2009	TX	
Methodist Hospital I65 at 21st Street Indianapolis IN 46206	150056	01/30/2009	IN	

Facility Name	Provider Number	Date Approved	State	Other Information
Mount Kisco Medical Group 34 S. Bedford Road Mount Kisco NY 10549	MO0W067610	01/30/2009	NY	
Danville Regional Medical Center 142 South Main Street Danville VA 24541	490075	01/30/2009	VA	
Hammond Clinic 9800 Valparaiso Drive Munster IN 46321	1457354318	01/30/2009	IN	
Alliance Imaging - Auburn Regional Medical Center 202 North Division Street Auburn WA 98001	8865493	01/30/2009	WA	
University of Connecticut Health Center 263 Farmington Avenue Farmington CT 06030	300001399	01/30/2009	CT	
Clinch Valley Medical Center 2949 West Front Street Richlands VA 24641	1871534297	01/30/2009	VA	
St. Mary Corwin Medial Center 1008 Minnequa Avenue Pueblo CO 81004	840405257	01/30/2009	CO	
Insight Imaging-Saint John's Regional Medical Cent 1700 N Rose Ave. Suite 110 Oxnard CA 93030	TP044	01/30/2009	CA	
Trinity Hospitals 407 3 Street SE Minot ND 58701	412002771	01/30/2009	ND	
Morris County Imaging 310 Madison Avenue Morristown NJ 07960	111293	01/30/2009	NJ	
Lake Norman Regional Medical Center 171 Fairview Road Mooresville NC 28117	34012	01/30/2009	NC	
Medical Imaging of Fredericksburg 1201 Sam Perry Boulevard, Suite 102 Fredericksburg VA 2240	7242956	01/30/2009	VA	
Medical Outsourcing Services LLC 450 Chew Street Allentown PA 18102	115171	01/30/2009	PA	
Southeastern Regional Medical Center 300 West 27th Street Lumberton NC 28358	340050	01/30/2009	NC	
Meridian Health, Riverview Medical Center 1 Riverview Plaza Red Bank NJ 07701	310034	01/30/2009	NJ	
Shands Jacksonville 555 W 8th Street Jacksonville FL 32209	100001	01/30/2009	FL	
Advantage Imaging, LLC 3733 Park East Drive Beachwood OH 44139, Suite 100	1336359686	01/30/2009	OH	
Marlette Regional Hospital 2770 Main Street, PO Box 307 Marlette MI 48453	231330	01/30/2009	MI	
Lewisburg Cancer Center 75 Medical Park Drive Lewisburg PA 17837	31076	01/30/2009	PA	
New Jersey Diagnostics & Imaging 455 Jack Martin Boulevard Brick NJ 08724	1710915483	01/30/2009	NJ	
Medical Oncology Associates, P.S. 6001 N Mayfair Street Spokane WA 99208	GAB37015	01/30/2009	WA	
DMS Imaging 10121 Pine Avenue Truckee CA 96161	ZZZ05188Z	01/30/2009	CA	
Northwest Medical Center 2801 N. State Road 7 Margate FL 33063	100189	01/30/2009	FL	
St.Joseph Hospital 1907 W. Sycamore Street Kokomo IN 46904	1780625442	01/30/2009	IN	
Mayo Clinic Jacksonville 4500 San Pablo Road Jacksonville FL 32224	97325	01/30/2009	FL	
Jewish Hospital 200 East Liberty Street Louisville KY 40222	1457354318	01/30/2009	KY	
Riverview Hospital Association 410 Dewey Street Wisconsin Rapids WI 54495	520033	01/30/2009	WI	
Mount Nittany Medical Center 1800 East Park Avenue State College PA 16803	390268	01/30/2009	PA	
Capital Medical Center 3900 Capital Mall Drive Olympia WA 98502	1841258639	01/30/2009	WA	
Treasure Hills Imaging Center 2121 Pease Street Harlingen TX 78550	FTA0091	01/30/2009	TX	
King's Daughter's Hospital & Health Services One King's Daughters Drive Madison IN 47250	1457354318	01/30/2009	IN	
St. Luke's Hospital--East Campus 85 Grand Avenue Fort Thomas KY 41075	1457354318	01/30/2009	KY	
Greenview Regional Hospital 1801 Ashley Circle Bowling Green KY 42104	1457354318	01/30/2009	KY	
TJ Samson Community Hospital 1301 N Race Street Glasgow KY 42141	1457354318	01/30/2009	KY	
Watson Clinic LLP 1600 Lakeland Hills Boulevard Lakeland FL 33805	162	01/30/2009	FL	
Major Hospital 2455 Inteliplex Drive Shelbyville IN 46176	1174555692	01/30/2009	IN	
Carroll Precision Imaging Center 680A Poole Road Westminster MD 21157	1598944761	01/30/2009	MD	
Providence Hospital 16001 West Nine Mile Road., P.O. Box 2043 Southfield MI 48037	1144210253	01/30/2009	MI	
Lexington Clinic 1221 South Broadway Lexington KY 40504	169	01/30/2009	KY	
St Francis Hospital 6161 S Yale Avenue Tulsa OK 74136	1457354318	01/30/2009	OK	
Kingman Regional Imaging Center 1033 Sycamore Avenue Kingman AZ 86409	30055	01/30/2009	AZ	
Morrow County Hospital 651 West Marion Road Mount Gilead OH 43338	361313	01/30/2009	OH	
Alliance Imaging - Gritman Medical Center 700 South Main Street Moscow ID 83843	17902911	01/30/2009	ID	
Putnam Hospital Center 670 Stoneleigh Avenue Carmel NY 10512	330273	01/30/2009	NY	
Associated Medical Specialist, PA 817 Farrar Drive Conway SC 29526	1063432391	01/30/2009	SC	
South Valley Radiology 16633 Ventura Boulevard, Suite 120 Encino CA 91436	W18950	W18950	CA	
Florida Cancer Institute 7651 Medical Drive Hudson FL 34667	K4006	01/30/2009	FL	
Albemarle Hospital 1144 N Road Street Elizabeth City NC 27909	340109	01/30/2009	NC	
Carilion New River Valley 2900 Lamb Circle Christiansburg VA 24073	490042	01/30/2009	VA	
Hope Diagnostic Imaging Center 2202 S. 77th Sunshine Strip Suite. E Harlingen TX 78550	FTNX12	01/30/2009	TX	
Optima Diagnostic Imaging 8900 Wilshire Boulevard Beverly Hills CA 90211	1659412757	01/30/2009	CA	
John Randolph Medical Center 411 W. Randolph Road Hopewell VA 23860	490020	01/30/2009	VA	
Salem Hospital 665 Winter Street SE Salem OR 97301	1265431829	01/30/2009	OR	
Nacogdoches Medical Center 4920 NE Stallings Drive Nacogdoches TX 75961	450656	01/30/2009	TX	
Fairfield Diagnostic Imaging 1241 River Valley Boulevard Lancaster OH 43130	1063472884	01/30/2009	OH	
PET Imaging Of Thornton 9461 Huron Street Thornton CO 80260	183123486	01/30/2009	CO	
East Bay Medical Oncology 4721 Dallas Ranch Road Antioch CA 94513	1932107331	01/30/2009	CA	
MultiCare Health System/ Tacoma General Hospital 316 Martin Luther King Way Tacoma WA 98405	1366556227	01/30/2009	WA	
University of Wisconsin-Hospital and Clinics 600 Highland Avenue Madison WI 53792	520098	01/30/2009	WI	
Open MRI and CT of South Miami, LLC 101 NW 1st Avenue Delray Beach FL 33444	1457405060	01/30/2009	FL	

Facility Name	Provider Number	Date Approved	State	Other Information
Dearborn County Hospital 600 Wilson Creek Road Lawrenceburg IN 47025	150086	01/30/2009	IN	
Alliance Imaging Inc-Desert Imaging 118 Castellano Drive ElPaso TX 79912	1639357213	01/30/2009	TX	
NSMS - Hamburg, IA 209 Limestone Pass Cottage Grove WI 53527	1295785079	01/30/2009	WI	
NSMS - Memphis, MO Sigler Avenue, RR #1 Box 53 Memphis MO 63555	1295785079	01/30/2009	MO	
Alliance Imaging - Hematology Oncology 715 W North Avenue Melrose Park IL 60160	216057	01/30/2009	IL	
South Miami Hospital 6200 SW 73 Street Miami, FL 33143	1982688230	01/30/2009	FL	
The PET/CT Center of North Florida 2161 Kingsley Avenue Orange Park FL 32073	1952320467	01/30/2009	FL	
Ascent Diagnostic Imaging of Tamarac 7180 North University Drive Tamarac FL 33321	AL571	01/30/2009	FL	
Wilson Medical Center 1705 Tarboro Street SW Wilson KY 41075	340126	02/02/2009	NC	
Lexington Medical Center 811 W Main Street Lexington KY 42141	1457354318	02/02/2009	SC	
Merced MRI 3365 G Street, Ste 100 Merced KY 42104	ZZZ19963Z	02/02/2009	CA	
Memorial Diagnostic Center 2901 Swann Avenue Tampa FL 33805	100206	02/02/2009	FL	
The PET/CT Center of North Florida 1375 Roberts Road Jacksonville Beach FL 46176	1932196243	02/02/2009	FL	
The PET/CT Center of North Florida 300 Health Park Boulevard #100 St.Augustine FL 32086	1861427155	02/02/2009	FL	
Oncology Hematology West, P.C. 17201 Wright Street Suite 100 Omaha NE 68130	1932178530	02/02/2009	NE	
The PET/CT Center of North Florida 795 SW State Road 47 Lake City FL 32025	1902893902	02/02/2009	FL	
The PET/CT Center of North Florida 710 Lomax Street Jacksonville FL 32204	1457529786	02/02/2009	FL	
Provena Saint Joseph Medical Center 2000 Glenwood Avenue Joliet IL 60435	140007	02/02/2009	IL	
Montgomery County Advanced Medical Imaging, LLC 2701 Blair Mill Road.Blairwood Bldg. Suite 3 Willow Grove PA 19090	1134315369	02/02/2009	PA	
Medical Outsourcing Services LLC One Elizabeth Place Dayton OH 45408	2391	02/02/2009	OH	
Insight Diagnostic Imaging 750 N Syringa Street Suite 104 Post Falls ID 83854	1710089636	02/02/2009	ID	
Hudson Valley Radiology Associates of Westchester 115 Main Street Tuckahoe NY 10707	1174574115	02/02/2009	NY	
Advocate Illinois Masonic Medical Center 3000 North Halsted Street, Suite 100 Chicago IL 60657	363196629	02/02/2009	IL	
The PET/CT Center of North Florida 600 Zeagler Drive Palatka FL 32177	1518986926	02/02/2009	FL	
Baptist Memorial Outpatient Diagnostic Center 504 Azalea Drive Oxford MS 38655	1053375576	02/02/2009	MS	
Alliance Imaging - Great Falls Clinic 3000 15th Avenue South Great Falls MT 59405	1790978146	02/02/2009	MT	
Central DuPage Hospital 25 N Winfield Road Winfield IL 60190	820800	02/02/2009	IL	
Medical Outsourcing Services LLC 4932 W 95th Street Oak Lawn IL 60453	211222	02/02/2009	IL	
The Cancer Center at Lake Manassas 7901 Lake Manassas Drive Gainesville VA 20155	1518024934	02/02/2009	VA	
Zwanger-Pesiri Radiology, LLP 80 Maple Avenue Smithtown NY 11787	W1391	02/02/2009	NY	
Ohio Valey General Hospital 500 Pine Hollow Road McKees Rocks PA 15136	390157	02/02/2009	OH	
Rockwood Clinic Radiation Oncology 2410 E. Sinto Avenue Spokane Valley WA 99216	356600	02/02/2009	WA	
Regional West Medical Center 4021 Avenue B Scottsbluff NE 69361	1639101199	02/02/2009	NE	
DuPage Medical Group at Rickert 1100 W. 31st Street Downers Grove IL 60515	1801833983	02/02/2009	IL	
Medical Outsourcing Services LLC 2701 W 68th Street Chicago IL 60629	211222	02/02/2009	IL	
Presbyterian Kaseman Hospital 8300 Constitution Avenue NE Albuquerque NM 87110	320021	02/02/2009	NM	
North Kansas City Hospital 2800 Clay Edwards Drive Parkville MO 64116	260096	02/02/2009	MO	
West Hernando Diagnostic Imaging 3315 Commercial Way Spring Hill FL 34606	1174668305	02/02/2009	FL	
NSMS - Robinson, IL 1000 N. Allen Street Robinson IL 62454	1295785079	02/02/2009	IL	
Memorial Hospital 715 South Taft Avenue Fremont OH 43420	360156	02/02/2009	OH	
Samaritan Imaging Center 1245 Wilshire Boulevard, Suite 205 Los Angeles CA 90017	1538258116	02/02/2009	CA	
Aurora West Allis Medical Center 8901 West Lincoln Avenue West Allis WI 53227	520139	02/02/2009	WI	
Hematology & Oncology Specialists, LLC 39 Starbrush Circle Covington LA 70433	5F818	02/02/2009	LA	
DDIS-PB 3250 Westchester Avenue Bronx NY 10461	w30661	02/02/2009	NY	
Toledo Clinic, Inc. 4235 Secor Road. Toledo OH 43623	1144217894	02/02/2009	OH	
CDSA 1421 Third Avenue New York NY 10028	1982700951	02/02/2009	NY	
Cancer Care Centers of So. Texas 2130 N.E. Loop 410 Suite 100 San Antonio TX 78217	1225064603	02/02/2009	TX	
Saddleback Memorial Medical Center 24451 Healthcenter Drive Laguna Hills CA 92653	50603	02/02/2009	CA	
Marshfield Clinic 2116 Craig Road Eau Claire WI 54701	390452970	02/02/2009	WI	
Liberty Pacific Advanced Imaging 16130 Ventura Boulevard Encino CA 91436	1962457812	02/02/2009	CA	
SimonMed Imaging, Inc. 20830 N Tatum Boulevard, Suite 190 Phoenix AZ 85050	1164460077	02/02/2009	AZ	
Marshfield Clinic- Rice Lake Center 1700 West Stout Street Rice Lake WI 54868	5090	02/02/2009	WI	
Ingham Regional Medical Center 401 W Greenlawn Avenue Lansing MI 48910	230167	02/02/2009	MI	
Space Coast Medical Associates LLP 490 N. Washington Avenue Titusville FL 32796	1558329581	02/02/2009	FL	
Ascent Diagnostic Imaging of Jacksonville 5210 Belfort Road, Suite 130 Jacksonville FL 32256	AL744	02/02/2009	FL	
Milford Regional Medical Center 12 Prospect Street Milford MA 01757	1477527497	02/02/2009	MA	
The Cancer Team Bellin Health 1580 Commanche Avenue GreenBay WI 54313	ESO114	02/02/2009	WI	
Community Cancer Center of North Florida 7000 N.W. 11th Place Gainesville FL 32605	1205858354	02/02/2009	FL	
Epic Care Dublin 6380 Clark AvenueDublin CA 94568	ZZZ39149Z	02/02/2009	CA	
Cornerstone McLaughlin & Marte3850 Tampa Road Palm Harbor FL 44718	1174668305	02/03/2009	FL	

Facility Name	Provider Number	Date Approved	State	Other Information
Methodist Dallas Medical Center 1441 N Beckley Avenue Dallas TX 75203	1457354318	02/03/2009	TX	
Methodist Charlton Medical Center 3500 W Wheatland Road Dallas TX 75737	1457354318	02/03/2009	TX	
Riverview Hospital 395 Westfield Road Nobelsville IN 46060	1457354318	02/03/2009	IN	
North Bay Imaging 625 W Baldwin Road Panama City FL 32405	1639208366	02/03/2009	FL	
University Medical Center 602 Indiana Avenue Lubbock TX 79413	1821087164	02/03/2009	TX	
Toms River Xray/Ct/MRI Center 154 Highway 37 W Toms River NJ 08755	540379	02/03/2009	NJ	
St. Mary's Hospital Imaging Department 25500 Point Lookout Road Leonardtown MD 20650	210028	02/03/2009	MD	
Banner Good Samaritan PET Center 1111 E McDowell Road Phoenix AZ 85006	H0016	02/03/2009	AZ	
Saint Luke's Northland Hospital 4320 Wornall Road, Suite 328 Kansas City MO 64111	111111	02/03/2009	MO	
Carmichael Imaging 6620 Coyle Avenue, Suite 110 Carmichael CA 95608	941694584	02/03/2009	CA	
Phoebe Putney Memorial Hospital 2709 Meredyth Drive Albany GA 31707	1710147210	02/03/2009	GA	
Trinity Medical Center 800 Montclair Road Birmingham AL 35213	10104	02/03/2009	AL	
Diagnostic Clinic 1551 West Bay Drive Largo FL 33770	36	02/03/2009	FL	
Titus Regional Medical Center 2001 North Jefferson Avenue Mount Pleasant TX 75455	1174526529	02/03/2009	TX	
Snow Canyon Clinic 272 East Center Street Ivins UT 84738	1235185645	02/03/2009	UT	
Conway Medical Center 300 Singleton Ridge Road, PO Box 829 Conway SC 29526	1134172000	02/03/2009	SC	
Nazha Cancer Center 801 New Road Northfield NJ 08225	1063698959	02/03/2009	NJ	
CHRISTUS Central Louisiana Imaging Center 3704 N Boulevard Alexandria LA 71301	190019	02/03/2009	LA	
Cobre Valley Community Hospital 5880 S Hospital Drive Globe AZ 85501	31314	02/03/2009	AZ	
Wuesthoff X-Ray and Lab at Baytree 7970 N. Wickham Road Melbourne FL 32940	1538298344	02/03/2009	FL	
Avera Holy Family 826 North 8th Street Estherville IA 51334	1508810177	02/03/2009	IA	
Hannibal Regional Hospital 6000 Hospital Drive Hannibal MO 63401	260025	02/03/2009	MO	
Alliance Imaging, Dreyer Clinic 1221 North Highland Avenue Aurora IL 60506	1235282344	02/03/2009	IL	
Cancer Care 11100 Hefner Pointe Drive Oklahoma City OK 73120	1295785392	02/03/2009	OK	
Fisher-Titus Medical Center 272 Benedict Avenue Norwalk OH 44857	360065	02/03/2009	OH	
Oaklawn Hospital 200 North Madison Street Marshall MI 49068	230217	02/03/2009	MI	
Dixie Regional Medical Center 544 South 400 East St. George UT 84790	460021	02/03/2009	UT	
New Jersey Institute of Radiology 630 Broad Street Carlstadt NJ 07072	115568	02/03/2009	NJ	
Medical Diagnostic Imaging 4349 Treadaway Boulevard Abilene TX 79602	1730387911	02/03/2009	TX	
Richmond 2900 Richmond Avenue Houston TX 77098	1730132234	02/03/2009	TX	
Lafayette General Medical Center-LGI 1211 Coolidge Boulevard Suite 201 Lafayette LA 70503	1275536799	02/03/2009	LA	
Ohio Cancer Specialists 1125 Aspira Court Mansfield OH 44906	1316917040	02/03/2009	OH	
Vantage Diagnostic Imaging 3400 W. Hefner Road Oklahoma City OK 73120	400522173	02/03/2009	OK	
Health Diagnostics 455 Hickey Boulevard #200 Daly City CA 94015	1467611467	02/03/2009	CA	
Physicians for Cure 795 S.W.State Road 47 Lake City FL 32025	1770739104	02/03/2009	FL	
Arkansas Cancer Center PET/CT 9601 Lile Drive, Suite 106 Little Rock AR 72205	1477535391	02/03/2009	AR	
Southeast Georgia Health System 2415 Parkwood Drive Brusnwick GA 31520	110025	02/03/2009	GA	
Illinois Valley Community Hospital 925 West Street Peru IL 61354	1457354318	02/03/2009	IL	
Oncology Hematology Associates of Southwest IN 3699 Epworth Road Newburgh IN 47630	1710150222	02/03/2009	IN	
Sam Houston Cancer Center 112 Medical Park Lane Huntsville TX 77340	00Z337	02/03/2009	TX	
Silicon Valley Medical Imaging 2191 Mowry Avenue Ste 500-H Fremont CA 94538	1376730358	02/03/2009	CA	
RADS (Radiology and Diagnostic Services) 7160 W 20th Avenue, Suite M126 Hialeah FL 33016	100187	02/03/2009	FL	
Kaweah Delta Imaging Center 4949 W Cypress Avenue Visalia CA 93277	1588663769	02/03/2009	CA	
University of South AL Mitchell Cancer Institute 1660 Springhill Avenue Mobile AL 36604	H398	02/03/2009	AL	
Murray-Calloway County Hospital 803 Poplar Street Murray KY 42071	1073504981	02/03/2009	KY	
Arizona Center for Hematology and Oncology 14674 W Mountain View Boulevard, #113 Surprise AZ 85374	Z31627	02/03/2009	AZ	
Wake Radiology Diagnostic Imaging, Inc. 300 Ashville Avenue Suite 180 Cary NC 27518	1538123450	02/03/2009	NC	
The Vancouver Clinic 700 NE 87th Avenue Vancouver WA 98686	685900	02/03/2009	WA	
Bronx-Lebanon Hospital Center 1650 Grand Concourse Bronx NY 10457	1558461962	02/03/2009	NY	
Evergreen Hemtology & Oncology, P.S. 309 E Farwell Road, Suite 100 Spokane WA 99218	1255592218	02/03/2009	WA	
NSMS - Parsons, KS 1902 59 Hwy South Parsons KS 67357	1295785079	02/03/2009	KS	
Florida Cancer Specialists- Cornerstone 3850 Tampa Road Palm Harbor FL 34684	1760590962	02/03/2009	FL	
Town Center Imaging 21 Hospital Drive, Suite 130 Palm Coast FL 32164	1558530006	02/03/2009	FL	
Memorial Hospital Of Carbondale 405 W. North Avenue Carbondale IL 62901	1093801797	02/03/2009	IL	
Herrin Hospital 201 South 14th Street Herrin IL 62948	1093801797	02/03/2009	IL	
Laughlin Memorial Hospital 1420 Tusculum Boulevard Greeneville TN 37745	1881669778	02/03/2009	TN	
Quantum PET - Hanover Hospital 300 Highland Avenue Hanover PA 17331	40635	02/03/2009	PA	
Parrish Medical Center 941 North Washington Avenue Titusville FL 32796	1053424648	02/03/2009	FL	
California Diagnostic Imaging Center, Inc 828 South Grand, Suite 107 Glendoro CA 91740	TP113	02/03/2009	CA	
NorCal Imaging – Pleasanton 5924 Stoneridge Drive Pleasanton CA 94588	1578687166	02/03/2009	CA	

Facility Name	Provider Number	Date Approved	State	Other Information
Sadler Clinic 9305 Pinecroft Drive The Woodlands TX 77380	1114979127	02/03/2009	TX	
Medical Center Hospital 500 West 4th Street Odessa TX 79760	450132	02/03/2009	TX	
Cascade Medical Imaging 2500 NE Neff Road Bend OR 97701	1194994145	02/03/2009	OR	
Palos Community Hospital 15300 West Avenue Orland Park IL 60462	1124276332	02/03/2009	IL	
Lemmen Holton Cancer Pavilion 145 Michigan Street, NE Grand Rapids MI 49503	230038	02/03/2009	MI	
Houston Cancer Institute 1220 Blalock Road Suite 100 Houston TX 77055	00N55X	02/03/2009	TX	
Hudson Valley Hematology - Oncology Associates 19 Baker Avenue, Suite 100 Poughkeepsie NY 12601	1275615809	02/03/2009	NY	
North Shore Radiology at Glen Cove, PC 10 Medical Plaza, Suite 106 Glen Cove NY 11542	1003024662	02/03/2009	NY	
Cape Radiology 4011 Route 9, South, PO Box 244 Rio Grande NJ 08242	1972592194	02/03/2009	NJ	
Frederick Imaging Centers, LLC 46 B Thomas Johnson Drive, Suite 100 Frederick MD 21702	1063699940	02/03/2009	MD	
EP Medical Imaging Technology 10767 Gateway West Suite520 El Paso TX 79935	1508987165	02/03/2009	TX	
Atlantis Diagnostics 1344 S Apollo Boulevard Melbourne FL 32901	1053382457	02/03/2009	FL	
Tri-City PETCT at Vista 902 Sycamore Avenue #120 Vista CA 92081	1154580348	02/03/2009	CA	
Florida Cancer Specialists/Sarasota Downtown 1970 Golf Street Sarasota FL 34236	1760590962	02/03/2009	FL	
Arizona Oncology Associates – Biltmore 2222 East Highland Avenue, Suite 130 Phoenix AZ 85016	1235193459	02/03/2009	AZ	
Las Vegas Radiology 7500 Smoke Ranch Road, Suite 100 Las Vegas NV 89128	1972714970	02/03/2009	NV	
Medical Outsourcing Services 2900 W. 16th Street Bedford IN 47421	1700812294	02/03/2009	IN	
Baptist East Hospital 4000 Kresge Way Louisville KY 40207	9372701	01/29/2010	KY	
Alpha Med Physicians Group 17333 S LaGrange Road, Suite 200 Tinley Park IL 60487-7581	610860	01/29/2010	IL	
Hackensack Medical and Molecular Imaging 155 State Street Hackensack NJ 07601	85238	01/29/2010	NJ	
Alexian Brothers Medical Center 820 Biesterfield Road Elk Grove Village IL 60007	1265577191	01/29/2010	IL	
South Texas Radiology Imaging Center-North East Imaging Center 12602 Toepperwein, Suite 101 San Antonio TX 78233	00867N	01/29/2010	TX	
Cancer Care Center 2435 Fire Mesa Street Las Vegas NV 89128	1760435713	02/01/2010	NV	
Diagnostic Imaging Association 400 N Garfield, Suite 110 Midland TX 79701	1255328817	02/01/2010	TX	
Jefferson Imaging Langhorne 825 Town Center Drive Langhorne PA 19047	1841269099	02/01/2010	PA	
Newark Beth Israel Medical Center 156 Lyons Avenue Newark NJ 07112	310002	02/01/2010	NJ	
Advanced Imaging Center 615 Valley View Drive, Suite 101 Moline IL 61265	702970	02/01/2010	IL	
Caritas PET Imaging, LLC at Noble Hospital 115 West Silver Street Westfield MA 01085	1285846410	02/01/2010	MA	
Jefferson Regional Medical Center 565 Coal Valley Road Pittsburgh PA 15236	390265	02/01/2010	PA	
Montgomery Hospital 1308 Powell Street Norristown PA 19404	390108	02/01/2010	PA	
Eastern New Mexico Medical Center Imaging Center 405 West Country Club Road Roswell NM 88201	320006	02/01/2010	NM	
Baltimore Imaging Centers North Park Center 4B North Ave, Suite 300 Bel Air MD 21014	H476	02/01/2010	MD	
New Jersey Institute of Radiology PC 630 Broad Street Carlstdat NJ 07072	412182809	02/01/2010	NJ	
Jupiter Hematology Oncology Associates 431 University Boulevard Jupiter FL 33458	1003854332	02/01/2010	FL	
Casa Grande Regional Medical Center 1800 E. Florence Boulevard Casa Grande AZ 85222	1437107208	02/01/2010	AZ	
Marshfield Clinic Minocqua Center 9601 Townline Road Minocqua WI 54548	1952347981	02/01/2010	WI	
Cancer Care Associates 11100 Hefner Pointe Drive Oklahoma City OK 73120	731469927	02/01/2010	OK	
Alliance Community Hospital 200 East State Street Alliance OH 44601	360131	02/01/2010	OH	
Hematology & Oncology Specialists, LLC 4200 Houma Boulevard Metairie LA 70006	1190500005	02/01/2010	LA	
Lake Pointe Imaging Center 1005 West Ralph Hall Parkway, #121 Rockwall TX 75032	450742	02/01/2010	TX	
Mountain Medical Physician Specialists 5121 Cottonwood Street Murray UT 84107	1720035520	02/01/2010	UT	
Advanced Breast Care Imaging 250 Cetronia Road, Suite 102 Allentown PA 18104	103579	02/01/2010	PA	
Independent Imaging, LLC 3347 South State Road 7, Suite 100 Wellington FL 33449	45741	02/01/2010	FL	
Ocean Medical Center 425 Jack Martin Boulevard Brick NJ 08724	1962409987	02/01/2010	NJ	
Newport Doctors Medical Imaging 401 Old Newport Boulevard, Suite 201 Newport Beach CA 92663-4289	W19467	02/01/2010	CA	
Neil M Barth, MD Inc 20162 S.W. Birch Street, Suite 150 Newport Beach CA 92660	1063551760	02/01/2010	CA	
Florida Cancer Institute - New Hope 4003 Mariner Boulevard Spring Hill FL 34609	K4006	02/01/2010	FL	
Gulfcoast Cancer Institute Largo 100 Highland Avenue Largo FL 33770	1629215579	02/01/2010	FL	
Grand View Hospital 905 Lawn Avenue Sellersville PA 18960	390057	02/02/2010	PA	
Citizens Memorial Healthcare 1500 North Oakland Avenue Bolivar MO 65613	1003981549	02/02/2010	MO	
Community Cancer Center of Lake City 4520 West US Hwy 90 Lake City FL 32055	K3866	02/02/2010	FL	
Memorial Hermann Sugarland 17510 W. Grand Parkway South, Suite 120 Sugar Land TX 77479	450848	02/02/2010	TX	Medical Plaza 1
Carlisle Regional Medical Center 361 Alexander Spring Road Carlisle PA 17015	390058	02/02/2010	PA	
Fairview Hospital 18200 Lorain Avenue Cleveland OH 44111	360077	02/02/2010	OH	MOLL CANCER PAVILLION
Community Hospital 2021 N. 12th Street Grand Junction CO 80501	60054	02/02/2010	CO	
Alliance Imaging-West Coast Rad-MV/LN 27882 Forbes Road, Suite 120 Laguna Niguel CA 92677	1093969479	02/02/2010	CA	
Boston Diagnostic 398 E Altamonte Springs Drive Altamonte Springs FL 32701	1083691463	02/02/2010	FL	
Gerald Champion Regional Medical Center 2669 N. Scenic Drive Alamogordo NM 88310	320004	02/02/2010	NM	
Metro South Imaging Center 12935 South Gregory Street Blue Island IL 60406	1700812294	02/02/2010	IL	
Christus St. Elizabeth 2830 Calder Street Beaumont TX 77702	450034	02/02/2010	TX	

Facility Name	Provider Number	Date Approved	State	Other Information
Central DuPage Hospital 25 N Winfield Road Winfield IL 60190	1003864810	02/02/2010	IL	
Gulf Coast MRI & Diagnostic 5233 Fairmont Parkway, Suite A Pasadena TX 77505	1609823822	02/02/2010	TX	
Desert Regional Medical Center, Pet/Ct 1180 N. Indian Canyon Drive #E-155 Palm Springs CA 92262	1104856095	02/02/2010	CA	
Advanced Imaging@Community Medical Center, LLC 2803 South Avenue West Missoula MT 59804	1164437943	02/02/2010	MT	
Menorah Medical Center 5721 West 119th Street Overland Park KS 66209	170182	02/02/2010	KS	Oncology Services
Northwest Imaging Center 4383 Medical Drive, Suite 150 San Antonio TX 78229	00867N	02/02/2010	TX	
Dayton Physicians, LLC. 9000 N. Main Street Dayton OH 45415	1902844947	02/02/2010	OH	
Mercy Medical Center – Dubuque 250 Mercy Drive Dubuque IA 52001	1659348506	02/02/2010	IA	
DORAL Diagnostic Center 8881 NW 18th Terrace Miami FL 33172	K7806	02/02/2010	FL	
Maple Grove Fairview 14500 99th Avenue North Maple Grove MN 55369	1841315165	02/02/2010	MN	
NSMS - Ste. Genevieve, MO US Hwy 61 & 32 Ste. Genevieve MO 63670	1295785079	02/02/2010	MO	
Floyd Memorial Hospital and Health Services 2210 Green Valley Road New Albany IN 47150	1497798847	02/02/2010	IN	
NSMS - Lebanon, MO 100 Hospital Drive Lebanon MO 65536	1295785079	02/02/2010	MO	
Inova Alexandria Hospital 4320 Seminary Road Alexandria VA 22304	490040	02/02/2010	VA	Radiology
Medical Doctors Imaging, Inc. 2020 Court Street Redding CA 96001	1235161480	02/02/2010	CA	
Hancock Regional Hospital 801 North State Street Greenfield IN 46140	1952559163	02/02/2010	IN	
Calvert Medical Imaging Center (CMIC) 130 Hospital Drive, Suite LL 100 Prince Frederick MD 20678	1629235312	02/02/2010	MD	
NSMS - Clay Center, KS 617 Liberty Street Clay Center KS 67432	1295785079	02/02/2010	KS	
Alliance HealthCare Services Inc 1401 West 5th Street Sheridan WY 82801	1134303845	02/02/2010	WY	
NUSCAN 101 Consolidated Medical Plaza Caguas PR 725	1275630527	02/02/2010	PR	201 Ave Gautier Benitez
Delta County Memorial Hospital 1501 East 3rd Street Delta CO 81416	1417935446	02/02/2010	CO	
Bozeman Deaconess Hospital 915 Highland Boulevard Bozeman MT 59715	1720079619	02/02/2010	MT	
Bradford Regional Medical Center 116 Interstate Parkway Bradford PA 16701	390118	02/02/2010	PA	
Gwinnett Medical Center 1000 Medical Center Boulevard Lawrenceville GA 30045	1952340994	02/02/2010	GA	
Mankato Clinic 1421 Premier Drive Mankato MN 56001	1629044029	02/02/2010	MN	
Delray Medical Center 5352 Linton Boulevard Delray Beach FL 33484	100258	02/02/2010	FL	
Buffalo Hospital 303 Catlin Street, Radiology Buffalo MN 55313	240076	02/02/2010	MN	
Evergreen Radia Imaging Center 11521 N.E. 128th Street, Suite 200 Kirkland WA 98034	AB39931	02/02/2010	WA	
Alliance Imaging - St. John';s Medical Center 625 E Broadway Jackson WY 83001	W22619	02/02/2010	WY	
Clarion Hospital One Hospital Drive Clarion PA 16214	1265422901	02/04/2010	PA	
Exempla St. Joseph's Hospital 1835 Franklin Street Denver CO 80218	1417946021	02/04/2010	CO	
Olean General Hospital 515 Main Street Olean NY 14760	1225083074	02/04/2010	NY	
Excel Medical Imaging 5626 Gulf Drive New Port Richey FL 34652	K5327	02/04/2010	FL	
Delnor Hospital (Imaging Dept) 300 Randall Road Geneva IL 60134	1407859655	02/04/2010	IL	
Cancer Center of Pasco Pinellas 3000 US Hwy 19 Holiday FL 34691	1101019207	02/04/2010	FL	
Citrus Memorial Health Systems 131 S. Citrus Avenue Inverness FL 34452	592890430	02/04/2010	FL	
Ironwood Cancer & Research Centers 6111 E Arbor Avenue Mesa/Chandler AZ 85206	Z70782	02/04/2010	AZ	695 S Dobson Rd
Cape Cod PET/CT Services, LLC 2 Jan Sebastian Drive Sandwich MA 02563	1407180847	02/04/2010	MA	
Mission Hospital 27700 Medical Center Road Mission Viejo CA 92691	1992752315	02/05/2010	CA	
MetroHealth 5900 Byron Center Ave SW Wyoming MI 49519	1619923919	02/05/2010	MI	
Ardmore PET Associates, LLC 908 North Rockford Road, Suite C Ardmore OK 73401	1447585302	02/05/2010	OK	
Baptist Medical Center PET*CT 800 Prudential Drive Jacksonville FL32221	15786220449	02/05/2010	FL	
Johnston Medical Center 509 N. Bright Leaf Boulevard Smithfield NC 27577	1619911104	02/05/2010	NC	
El Camino Hospital 2500 Grant Road Mountain View CA 95040	943167314	02/05/2010	CA	
NSMS - Carthage, MO 3125 Drive Russell Smith Way Carthage MO 64836	1295785079	02/05/2010	MO	
Gulfcoast Cancer Center 100 Highland Avenue NE Largo FL 33770	1225019649	02/05/2010	FL	
Elite Advanced 17260 Bear Valley Road Victorville CA 92395	ZZZ23616Z	02/05/2010	CA	
Mountainside Hospital 1 Bay Avenue Montclair NJ 07042	310054	02/05/2010	NJ	
Orange Coast Memorial Imaging Center 9920 Talbert Avenue Fountain Valley CA 92708	50678	02/05/2010	CA	
NYOH Mobile PET/CT Imaging Saratoga 377 Church Street Saratoga Springs NY 12866	1609863448	02/05/2010	NY	
Compassionate Cance Care Radiation Diagnostic Grp 260 E. Ontario Avenue, Suite #101 Corona CA 92879	1720073935	02/05/2010	CA	
Athens Cancer Center 75 Hospital Drive, Suite 170 Athens OH 45701	203145500	05/02/2010	OH	
Birmingham PET Imaging 1425 Montgomery Highway Vestavia Hills, AL 35216	1033199179	02/16/2011	AL	Phone #: 205-978-0347
Advanced Diagnostic Radiology 952 Seton Drive Cumberland, MD 21502	1982607933	02/16/2011	MD	Phone: 301-777-3840
Alliance Imaging/Western Arizona Regional 1245 Hancock Road Bullhead City, AZ 86442	1396912788	02/16/2011	AZ	Phone: 928-704-6748
Anne Arundel Diagnostics Imaging 2002 Medical Parkway Annapolis, MD 21401	S645	02/16/2011	MD	Suite 100; Phone #: 443-481-4915
Aurora Imaging Center 9102 Floyd Curl Drive San Antonio, TX 78240	1992896633	02/16/2011	TX	Phone #: 210-247-0888
Baptist Regional Medical Center One Trillium Way Corbin KY 40701	180080	02/16/2011	KY	Phone #: 606-523-8542
Barberton Citizens Hospital 155 5th Street Barberton, OH 44203	1174705941	02/16/2011	OH	Phone: 330-615-3922

Facility Name	Provider Number	Date Approved	State	Other Information
Bay Ridge Medical Imaging, PC 7601 4TH Avenue Brooklyn, NY 11209	1134152705	02/16/2011	NY	Phone #: 718-238-7000
Cancer Care Centers of Florida 5802 S.R. 54 New Port Richey, FL 34652	1013103084	02/16/2011	FL	Phone #: 727-842-2795
Cancer Care Centers of Florida Brooksville 14529 Cortez Boulevard Brooksville, FL 34613	1013103084	02/16/2011	FL	Phone #: 727-842-2795
Canonsburg General Hospital 100 Medical Boulevard Canonsburg, PA 15317	390160	02/16/2011	PA	Phone: 724-873-1120
Capital Oncology PLLC 121 North Division Street Auburn, WA 98001	1720109457	02/16/2011	WA	Suite 100; Phone #: 253-887-9333
Caritas PET Imaging, LLC - Hawthorn Medical Assoc 535 Faunce Corner Road Dartmouth, MA 02747-1242	1821310368	02/16/2011	MA	Phone: 877-877-8455
Clinical Pet of Ocala 3233 SW 33rd Road Ocala, FL 34474	E7179D	02/16/2011	FL	Phone #: 352-861-4602
Colorado Hematology Oncology 991 South Park Drive Littleton, CO 80120	1497845622	02/16/2011	CO	Phone: 303-733-9971
Community Health Center of Branch County – Coldwater 274 E. Chicago Street Coldwater, MN 49036	1063471639	02/16/2011	MI	Phone: 517-279-5400
Contra Costa Oncology 3000 Oak Road Suite 111 Walnut Creek, CA 94597	1831201912	02/16/2011	CA	Phone #: 925-939-9610
Cutting Edge PET/CT and Imaging 95 Wyekoff Avenue Brooklyn, NY 11237	1427371756	02/16/2011	NY	Phone: 718-381-5550
Diagnostic Imaging Services 925 Avenue C Marrero, LA 70072	1699793166	02/16/2011	LA	Phone: 504-459-3298
Elizabeth A. Odumakinde, M.D. 2571 Park Avenue Concord, CA 94520	1952408999	02/16/2011	CA	Phone: 925-674-2100
Emerson Hospital 133 Old Road to Nine Acre Corner Concord, MA 01742	1922103357	02/16/2011	MA	Phone: 978-287-3750
Emory University Hospital Midtown MOT PET/CT 550 Peachtree Street NE Atlanta GA 30308	1144203563	02/16/2011	GA	8th Floor MOT Radiology; Phone #: 404-686-2001
Ephraim McDowell Health 217 S Third Street Daneville, KY 40422	1316141351	02/16/2011	KY	Phone: 859-239-2470
Ephrata Community Hospital 460 North Reading Road Ephrata, PA 17522	390225	02/16/2011	PA	Phone #: 717-738-6414
Fairview Red Wing Health Services 701 Fairview Boulevard Red Wing, MN 55033	1164400024	02/16/2011	MN	Phone: 651-267-5252
Fairview Ridges Medical Center 201 E. Nicollet Boulevard Burnsville, MN 55337	1952499444	02/16/2011	MN	Phone: 952-892-2545
Florida Cancer Specialists- Goodlette 4371 Veronica S. Shoemaker Boulevard Fort Myers, FL 33916	1760590962	02/16/2011	FL	Phone #: 239-274-8200
Florida Cancer Specialists- Tampa 4612 N. Habana Avenue Tampa, FL 33614	21682E	02/16/2011	FL	Suite 200; Phone #: 239-274-2115
Florida Hospital Cancer Institute of Kissimmee 1300 West Oak Street Kissimmee, FL 34741	590724459	02/16/2011	FL	Phone: 407-303-3233
Florida Hospital Flagler 60 Memorial Medical Parkway Palm Coast, FL 32164	100118	02/16/2011	FL	Phone #: 386-586-4370
Florida Hospital Imaging 335 Clyde Morris Boulevard Ormond Beach, FL 32174	1063426823	02/16/2011	FL	Suite 250; Phone #: 386-898-0251
Franklin Regional Hospital 15 Aiken Avenue Franklin, NH 3235	F38561	02/16/2011	NH	Phone #: 603-934-2060
GHPMA Diagnostic Center 22710 Professional Drive Kingwood, TX 77339	oa5330	02/16/2011	TX	Suite 104; Phone: 281-292-1950
Havasu Regional Medical Center 101 Civic Center Lane Lake Havasu City, AZ 86403	1780761866	02/16/2011	AZ	Phone: 928-453-0183
Henry Ford Wynandotte Hospital PET Imaging 23050 West Road Brownstown, MI 48183	230146	02/16/2011	MI	Phone: 734-246-9151
Imaging Specialist of Pasadena 630 S. Raymond Avenue Pasadena, CA 91105	HW13860	02/16/2011	CA	Phone: 626-356-0700
INTEGRIS Cancer Institute of Oklahoma 5911 W. Memorial Road Oklahoma City, OK 73142	370106	02/16/2011	OK	Phone: 405-773-6400
JFK Medical Center 65 James Street Edison, NJ 8820	1659387975	02/16/2011	NJ	Phone #: 732-321-7000
Lancaster Regional Medical Center 250 College Avenue Lancaster, PA 17603	1467491027	02/16/2011	PA	Phone: 717-291-8296
Life Line Hospital 200 School Street Wintersville, OH 43953	360357	02/16/2011	OH	Phone: 740-346-2600
Littleton Adventist Hospital 7700 S. Broadway Littleton, CO 80122	60064	02/16/2011	CO	Phone #: 303-730-5841
Meadows Regional Medical Center 1703 Meadows Lane Vidalia GA 30474	1770575003	02/16/2011	GA	Phone #: 912-537-8921, ext 5786
Memorial Hospital in Owosso 826 West King Street Owosso, MI 44867	230121	02/16/2011	MI	Phone: 989-723-5211
Mercy Memorial Hospital Systems 718 N Macomb Street Monroe, MI 48162	1811097223	02/16/2011	MI	Phone: 734-240-5600
Methodist University Hospital PET Imaging Center 1388 Madison Avenue Memphis, TN 38104	440049	02/16/2011	TN	Phone #: 901-276-6413
MidMichigan Medical Center – Midland 4005 Orchard Drive Midland, MI 48670	230222	02/16/2011	MI	Phone: 989-839-3430
Naples Diagnostic Imaging Center 311 9th Street North Naples, FL 34102	1609868447	02/16/2011	FL	#104; Phone #: 239-692-9667
Newton Imaging P.A. 89 Sparta Avenue Sparta, NJ 07871	1417988841	02/16/2011	NJ	Suite 110; Phone: 973-729-0002
North Cypress Medical Center 21214 NW Fwy Cypress, TX 77429	670024	02/16/2011	TX	Phone: 832-912-3500
NSMS - Hot Springs National 1910 Malvern Avenue Hot Springs, AR 71901	1295785079	02/16/2011	AR	Phone: 800-500-4014
Oncology Consultants Imaging Center 2130 W Holcombe Boulevard Houston, TX 77030	00975K	02/16/2011	TX	Phone: 713-600-0909
Parkway Ventures - Good Samaritan 5601 Loch Raven Boulevard Baltimore, MD 21239	FMN002	02/16/2011	MD	Phone: 410-933-2290
PET Imaging Center at Harford 602 South Atwood Road Bel Air, MD 21014	434L	02/16/2011	MD	Phone #: 410-836-7119
Phelps County Regional Medical Center 1000 West Tenth Street Rolla, MO 65401	10419109	02/16/2011	MO	Phone #: 573-458-7500
Pioneers Memorial 207 West Region Road Brawley, CA 92227	1770717290	02/16/2011	CA	Phone: 760-351-3333
Plano West Cancer Center 4708 Alliance Boulevard Plano, TX 75093	1811944101	02/16/2011	TX	Suite 150; Phone #: 972-596-7801
Presbyterian Hospital Huntersville 10030 Gilead Road Huntersville, NC 28078	3400053	02/16/2011	NC	Phone: 704-316-4000
Providence Hospital Cancer Center 6701 Airport Boulevard Mobile, AL 6608	51554825	02/16/2011	AL	Phone #: 251-631-3157
Providence Hospital Southfield 16001 West Nine Mile Road Southfield, MI 48037-2043	1144210253	02/16/2011	MI	P.O. Box 2043; Phone: 248-849-3371
PSL PET Imaging of Thornton 9461 Huron Street Thornton, CO 80260	1720038946	02/16/2011	CO	Phone: 303-657-3760
Pueblo Radiology Medical Group of Ventura 4516 Market Street Ventura CA 93003	1871549899	02/16/2011	CA	Phone #: 805-654-8170

Facility Name	Provider Number	Date Approved	State	Other Information
Quest Imaging Medical Associates 9602 Stockdale Hwy Bakersfield CA 93311	1942236443	02/16/2011	CA	Phone #: 661-633-5000
Radiation Oncology PET/CT Center 3960 Health Sciences Drive La Jolla, CA 92093	1558463927	02/16/2011	CA	Phone #: 619-543-1998
Regents Imaging of Escondido 255 Elm Street Suite 102 Escondido, CA 92025	1740360551	02/16/2011	CA	Phone #: 760-743-3873
Renaissance Imaging Center at Antelope Valley Hospital 44105 15th Street West Lancaster, CA 93534	1487608931	02/16/2011	CA	Suite 100; Phone: 661-726-6032
Renaissance Imaging Center at Northridge Hospital 18436 Roscoe Boulevard Northridge, CA 91325	1487608931	02/16/2011	CA	Phone #: 818-435-1436
Resolution Imaging Medical Corp 2336 Santa Monica Boulevard. Suite 206 Santa Monica, CA 90404	1750519401	02/16/2011	CA	Phone #: 310-828-7226
Rocky Mountain Oncology Center 6501 East 2nd Street Casper, WY 82609	1003862723	02/16/2011	WY	Phone #: 307-235-5433
Sansum Clinic 317 W Pueblo Street Santa Barbara, CA 93105	WR211	02/16/2011	CA	Phone: 805-681-7651
Scottsdale Medical Imaging NMRI 9003 E Shea Boulevard Scottsdale, AZ 85260	1902896236	02/16/2011	AZ	Phone #: 480-425-5000
Seton Imaging Center 3449 Wilkens Avenue Baltimore, MD 21229	115500	02/16/2011	MD	Phone #: 410-368-2852
Shannon Medical Center 120 East Harris Street San Ingelo, TX 76903	450571	02/16/2011	TX	Phone #: 325-653-6741
Skokie Hospital 9600 Gross Point Road Skokie, IL 60076	140010	02/16/2011	IL	Phone: 847-933-3641
South Central Regional Medical Center 1220 Jefferson Street Laurel, MS 39440	250058	02/16/2011	MS	Phone: 601-426-4054
Southwestern Vermont Medical Center 100 Hospital Drive Bennington, VT 5201	1205865789	02/16/2011	VT	Phone #: 802-447-5112
St Anthony Hospital 1601 SE Court Avenue Pendleton, OR 97801	381319	02/16/2011	OR	Phone #: 541-278-3228
St. Cloud Hospital 1406 6th Avenue N St. Cloud, MN 56303-1901	1043269798	02/16/2011	MN	Imaging Services; Phone #: 320-255-5694
St. Francis PET Imaging LLC 411 Calypso Street Monroe, LA 71201	5C918	02/16/2011	LA	Suite 150; Phone: 318-966-6240
St. Francis Tulsa 4912 Higbee Avenue NW Canton, OH 44718	1457354318	02/16/2011	OH	Suite 100; Phone: 877-688-6122
St. John's Moross 1315 Macom Drive Naperville, IL 60564	116	02/16/2011	IL	Phone: 313-343-8761
St. Joseph Medical Center 7501 Osler Drive Towson, MD 21204	21007	02/16/2011	MD	Phone #: 410-427-2517
St. Joseph Regional Medical Center 415 6th Street Lewiston, ID 83501	1225090954	02/16/2011	ID	Phone #: 208-799-5447
St. Lukes Center for Diagnostic Imaging 6 McBride and Sons Corporate Center Drive Chesterfield MO 63005	47006	02/16/2011	MO	Phone #: 636-519-7865
St. Mary';s Hospital 350 Boulevard Passaic, NJ 07055	310006	02/16/2011	NJ	Phone: 973-365-4745
Stevens Community Medical Center 400 East 1st Street Morris, MN 56267	241363	02/16/2011	MN	PO Box 660; Phone #: 320-589-1313
Stevens Hospital 21601 76th Ave. West Edmonds, WA 98026	1033107214	02/16/2011	WA	Phone: 425-640-4268
SunHealth Boswell Lakes Imaging Center 10474 West Thunderbird Boulevard, Suite 100 PO Box 1278 Sun City AZ 84143	30061	02/16/2011	AZ	Phone #: 623-872-4840
Sutter Medical Foundation – West 2700 Low Court Fairfield, CA 94533	ZZZ30412Z	02/16/2011	CA	Phone #: 707-432-2511
Texas Oncology – Grapevine 1631 Lancaster, Suite 150 Grapevine, TX 76051	1033386578	02/16/2011	TX	Phone #: 817-281-9080
Texas Oncology - South Austin 4101 James Casey Street Austin, TX 78745	1811944101	02/16/2011	TX	Suite 100; Phone #: 512-447-2202
Texas Oncology, PA 1000 S. Coulter Amarillo, TX 79106	1811944101	02/16/2011	TX	Phone #: 806-358-8654
The Cancer Care Institute Atlanticare Health Park 2500 English Creek Avenue Egg Harbor Twp., NJ 08234	310064	02/16/2011	NJ	Building 400; Phone: 609-677-7708
The Chester County Hospital 701 East Marshall Street West Chester, PA 19380	1356333579	02/16/2011	PA	Phone #: 610-431-5132
The Hospital of Central Connecticut 100 Grand Street New Britain CT 6050	70035	02/16/2011	CT	Phone #: 860-224-5900, ext 2154
TMC Outpatient Imaging 6400 Fannin Street Houston, TX 77030	741152597	02/16/2011	TX	#1600; Phone: 713-448-5705
Trinity PET/CT 3204 Johnson Road Steubenville, OH 43952	341842025	02/16/2011	OH	Phone #: 740-264-8738
Twenty First Century Oncology – Jacksonville 7751 Baymeadows Road East Jacksonville, FL 32256	40259	02/16/2011	FL	Phone #: 904-562-4400
UC Irvine Radiological Sciences 101 The City Drive South Orange, CA 92868	50348	02/16/2011	CA	Route 28; Phone #: 714-456-5543
UM Sylvester @ Deerfield Beach 1192 East Newport Center Drive Deerfield Beach, FL 33442	100079	02/16/2011	FL	Phone: 954-571-0134
University Medical Imaging 4291 N. Campbell Avenue Tucson, AZ 85719	1154384899	02/16/2011	AZ	Phone #: 520-425-8900
Utah Valley Regional Medical Center 1034 North 500 West Provo, UT 84604	460001	02/16/2011	UT	Phone #: 801-357-3204
Valdese Cancer Center at BRHC 720 Malcolm Boulevard Valdese, NC 28690	1306821798	02/16/2011	NC	Phone: 828-580-7536
West Rad Medical Group/West Coast PETCT 16300 Sand Canyon Avenue Irvine, CA 92618	1609802842	02/16/2011	CA	Suite 103; Phone #: 888-755-7226
White Memorial Medical Center 1720 Cesar E. Chavez Avenue Los Angeles CA 90033	952282647	02/16/2011	CA	Phone #: 323-260-5745
William Beaumont Hospital - Grosse Pointe 21400 E. Eleven Mile St. Clair Shores, MI 48081	1932396017	02/16/2011	MI	Phone: 313-343-1855
William Beaumont Hospital-Troy 44201 Dequindre Road Troy, MI 48085	230269	02/16/2011	MI	Phone #: 248-964-4860
Willis-Knighton Cancer Center 2600 Kings Highway Shreveport, LA 71103	1568461572	02/16/2011	LA	Attn: PET/CT; Phone #: 318-212-8056
York Hospital Imaging Center at Apple Hill 37 Monument Road York, PA 17405	1326060492	02/16/2011	PA	Suite #101; Phone: 717-851-2905

Addendum XII: Medicare-Approved Ventricular Assist Device (Destination Therapy) Facilities (January Through March 2011)

Addendum XII includes a listing of Medicare-approved facilities that receive coverage for ventricular assist devices used as destination therapy. All facilities were required to meet our standards in order to receive coverage for ventricular assist devices implanted as destination therapy.

On October 1, 2003, we issued our decision memorandum on ventricular assist devices (VADs) for the clinical indication of destination therapy. We determined that VADs used as destination therapy are reasonable and necessary only if performed in facilities that have been determined to have the experience and infrastructure to ensure optimal patient outcomes. We established facility standards and an application process. All facilities were required to meet our standards in order to receive coverage for VADs implanted as destination therapy.

For the purposes of this quarterly notice, we list all Medicare-approved facilities that meet our standards as of the ending date of the period covered by this notice. Based on our proposal for future quarterly notices, we would provide only the specific updates that have occurred in the three-month period along with a hyperlink to the Web site to access this information and a contact person for questions or additional information.

This information is available on our Web site at *http://www.cms.gov/MedicareApprovedFacilitie/VAD/list.asp#TopOfPage.*

For questions or additional information, contact JoAnna Baldwin, MS (410–786–7205).

BILLING CODE 4120–01–P

VAD Destination Therapy Facilities				
Facility	**Provider Number**	**Date Approved**	**State**	**Other Information**
Advocate Health & Hospitals 4440 W 95th Street Oak Lawn, Illinois	140208	12/17/03	IL	Joint Commission certified on 05/26/07.
California Pacific Medical Center 2333 Buchanan Street San Francisco, California	050047	12/9/09	CA	Decertified from 03/28/09 to 12/08/09. Joint Commission certified as of 12/9/09.
Baptist Memorial Hospital 6019 Walnut Grove Road Memphis, Tennessee	440048	04/07/04	TN	Joint Commission certified on 03/12/09.
Duke University Medical Center DUMC Box 3943 Durham, North Carolina	340030	10/31/03	NC	Joint Commission certified on 01/16/09.
Fairview-University Medical Center 2450 Riverside Avenue Minneapolis, Minnesotta	240080	10/28/03	MN	Joint Commission certified on 05/06/09.
Allegheny General Hospital 320 E North Avenue Pittsburgh, Pennsylvania	390050	12/10/03	PA	Joint Commission certified on 03/08/08.
Barnes-Jewish Hospital 216 South Kingshighway Boulevard. Saint Louis, Missouri	260032	10/27/03	MO	Joint Commission certified on 08/22/08.
Brigham and Women's Hospital 15 Francis Street Boston, Massachusetts	220110	01/09/04	MA	Joint Commission certified on 11/05/08
Bryan LGH Medical Center East 1600 S 48 Street Lincoln, Nebraska	280003	10/23/03	NE	Date decertified: 03/28/09.
Cedars-Sinai Medical Center 8700 Beverly Boulevard Los Angeles, California	050625	12/29/03	CA	Joint Commission certified on 12/12/08.
Clarian Health Partners, Inc. (Methodist Hospital) 1701 N. Senate Boulevard Indianapolis, Indiana	150056	11/25/03	IN	Joint Commission certified on 10/6/08.
Cleveland Clinic 9500 Euclid Avenue Cleveland, Ohio	360180	12/03/03	OH	Joint Commission certified on 12/29/08.
Hahnemann University Hospital Broad and Vine Streets Philadelphia, Pennsylvania	390290	12/22/03	PA	JCAHO certified on 09/19/08.
Hospital of the University of Pennsylvania 3400 Spruce Street Philadelphia, Pennsylvania	390111 /1851370910	05/23/08	PA	Joint Commission certified on 05/23/08.
Henry Ford Hospital 2799 W Grand Boulvard	230053	01/06/04	MI	Joint Commission certified on 10/31/08.
Inova Fairfax Hospital 3300 Gallows Road Falls Church, Virginia	490063	03/31/04	VA	Joint Commission certified on 12/10/08.
Jewish Hospital 200 Abraham Flexner Way Louisville, Kentucky	180040	11/10/03	KY	Joint Commission certified on 01/09/09.
Jackson Memorial Hospital, University of Miami 1611 NW 12th Avenue Miami, Florida	100022	10/23/09	FL	Decertified from 3/28/09 to 10/22/09. Joint Commission certified as of 10/23/09.
Intermountain Medical Center 5121 South Cottonwood Street Murry, UT	460010	10/23/03	UT	Joint Commission certified on 12/18/08. Hospital was previously listed as LDS Hospital.
Johns Hopkins Hospital 600 N Wolfe Street Baltimore, Maryland	210009 /1790700904	10/28/03	MD	Joint Commission certified on 07/09/08.
Loyola University Medical Center 2160 S 1st Avenue Maywood, Illinois	140276	01/30/04	IL	Decertified on 03/28/09.
Lutheran Hospital of Indiana 7950 W Jefferson Boulevard Fort Wayne, Indiana	150017	09/15/10	IN	Hospital was certified by CMS from 10/29/03 until being decertified on 07/30/07. The hospital is certified by the Joint Commission as of 09/15/10.
Massachusetts General Hospital 55 Fruit Street Boston, Massachusetts	220071	12/15/03	MA	Joint Commission certified on 12/03/08.
Mayo Clinic 4500 San Pablo Road Jacksonville, Florida	100151	11/06/03	FL	Joint Commission certified on 3/18/09
Medical City Dallas Hospital 7777 Forest Lane Dallas, Texas	450647	12/03/03	TX	Joint Commission certified on 10/02/08.
The Methodist Hospital 6565 Fannin Houston, Texas	450358	11/03/03	TX	JCAHO certified on 10/29/08.
Montefiore Medical Center 111 E 210th Street Bronx, New York	330059	11/14/03	NY	Joint Commission certified on 11/12/08.
Methodist Specialty and Transplant Hospital 8026 Floyd Curl Drive San Antonio, Texas	450388	11/19/03	TX	Joint Commission certified on 1/28/09.
Newark Beth Israel Medical Center 201 Lyons Avenue Newark, New Jersey	310002	11/14/03	NJ	Joint Commission certified on 02/23/09.
Mount Sinai Medical Center 1190 5th Avenue New York, New York	330024	11/25/03	NY	Joint Commission certified on 11/26/08.
New York-Presbyterian Hospital 177 Fort Washington Avenue New York, New York	330101	10/28/03	NY	Columbia University Medical Center. Joint Commission certified on 04/01/09.
Ohio State University Columbus, Ohio	360085	11/12/03	OH	Joint Commission certified on 12/19/08.
Oregon Health and Sciences University 3181 SW Sam Jackson Park Road Portland, Oregon	380009	11/21/03	OR	Joint Commission certified - 11/12/08.
OSF St Francis Medical Center 530 NE Glen Oak Avenue Peoria, Illinois	140067	8/31/09	IL	The hospital was decertified on 03/28/09 and became recertified on 08/31/09 when Joint Commission certification was obtained.
Penn State Milton S Hershey Medical Center 500 University Drive Hershey, Pennsylvania	390256	10/29/03	PA	Joint Commission certified on 05/19/08.
Rush-Presbyterian-St Luke Medical Center 1653 W Congress Parkway Chicago, Illinois	140119	11/14/03	IL	Decertified 07/30/07.
Sentara Norfolk General Hospital 600 Gresham Drive Norfolk, Virginia	490007	11/10/03	VA	Joint Commission certified on 11/14/08.
Sacred Heart Medical Center 101 W 8th Avenue Spokane, Washington	500054	01/12/04	WA	Joint Commission certified on 04/16/09.
Seton Medical Center 1201 W 38th Street Austin, Texas	450056	05/01/09	TX	This center was initially certified on 01/13/04 and was decertified on 06/27/08. This center was recertified on 05/01/09 through the Joint Commission.
Shands at the University of Florida 1600 SW Archer Road Gainesville, Florida	100113	11/26/03	FL	Joint Commission certified on 1/24/09.
Sharp Memorial Hospital 7901 Frost Street	050100 /1407839921	12/01/03	CA	Joint Commission certified on 7/18/08.

VAD Destination Therapy Facilities				
Facility	**Provider Number**	**Date Approved**	**State**	**Other Information**
San Diego, California				
Stanford University Hospital and Clinics 300 Pasteur Drive Stanford, California	050441	11/24/10	CA	Joint Commission certified on 11/24/10. The hospital was initially certified on 12/22/03 and was decertified on 3/28/09. Facility is also named the Stanford University Medical Center.
St Francis Hospital 6161 S Yale Avenue Tulsa, Oklahoma	370091	01/09/04	OK	Decertified on 08/13/07.
St Luke's Medical Center 2900 W Oklahoma Avenue Milwaukee, Wisconsin	520138	11/03/03	WI	Joint Commission certified on 03/11/09.
St Luke's Episcopal Hospital 6720 Bertner Avenue Houston, Texas	450193	10/28/03	TX	JCAHO certified on 10/08/08.
St Vincent Hospital and Health Services Indianapolis, Indiana	150084	01/05/04	IN	Joint Commission certified on 01/28/09.
UT Southwestern University Hospital 5909 Harry Hines Boulevard Dallas, Texas	450044	12/10/03	TX	Joint Commission certified on 02/03/09. Hospital previously listed as St. Paul Medical Center.
Strong Memorial Hospital 601 Elmwood Avenue Rochester, New York	330285/1346 285657	10/29/03	NY	Joint Commission certified on 06/18/08.
Tampa General Hospital 2 Columbia Drive Tampa, Florida	100128	11/26/03	FL	Joint Commission certified on 02/18/09.
Temple University Hospital 3401 N Broad Street Philadelphia, Pennsylvania	390027	11/03/03	PA	Decertified on 03/28/09.
Tufts-New England Medical Center 750 Washington Street Boston, Massachusetts	220116	11/06/03	MA	Joint Commission certified on 10/24/08.
UCLA Medical Center Los Angeles, California	050262	12/10/03	CA	Joint Commission certified on 02/07/09.
University Medical Center 1501 N Campbell Avenue Tucson, Arizonia	030064	10/29/03	AZ	Joint Commission certified on 11/22/08.
University of Alabama at Birmingham Health System 500 22nd Street S Birmingham, Alabama	010033	10/29/03	AL	Joint Commission certified on 12/10/08.
University of Colorado Hospital 4200 E Ninth Avenue Denver, Colorado	060024 /1477531580	11/06/03	CO	9th & Colorado Campus Joint Commission certified on 07/23/08.
The University of Chicago Hospitals and Health System 5841 South Maryland Avenue Chicago, Illinois	140088	02/25/04	IL	Joint Commission certified on 03/16/09.
University of Iowa Hospitals and Clinics 200 Hawkins Drive Iowa City, Iowa	160058	06/23/10	IA	Facility was initially certified on 11/12/03 and became decertified on 08/08/07. Recertification from the Joint Commission began 06/23/10.
University of Maryland Medical Center 22 S Greene Street Baltimore, Maryland	210002	11/12/03	MD	Joint Commission certified on 12-11-08.
University of Michigan Health System 1500 E Medical Center Drive Ann Arbor, Michigan	230046	10/27/03	MI	Joint Commission certified on 03/28/08.
University of North Carolina Hospitals 101 Manning Drive Chapel Hill, North Carolina	340061	05/05/04	NC	JCAHO certified 10/28/08.
University of Utah Hospital 50 N Medical Drive Salt Lake City, Utah	460009	12/22/03	UT	JCAHO certified 03/11/09.
University of Virginia Health System Jefferson Park Avenue Charlottesville, Virginia	490009	2/13/10	VA	This hospital was decertified on 03/28/09 and became recertified on 02/13/10 when Joint Commission certification was obtained.
University of Washington Medical Center 1959 NE Pacific Street Seattle, Washington	500008	01/15/04	WA	Joint Commission certified on 2/11/09.
University of Wisconsin Hospitals and Clinics 600 Highland Avenue Madison, Wisconsin	520098	12/03/03	WI	Joint Commission certified on 09/16/08.
USC University Hospital 1500 San Pablo Los Angeles, California	050696	01/09/04	CA	Joint Commission certified on 04/09/09.
UPMC Presbyterian 200 Lothrop Street Pittsburgh, Pennsylvania	390164	10/23/03	PA	Joint Commission certified on 06/11/08.
Virginia Commonwealth University Medical Center 401 North 12th Street Richmond, Virginia 23298	490032	04/08/04	VA	(Medical College of Virginia Hospitals) Joint Commission certified on 12/22/08.
Vanderbilt University Medical Center 1161 21st Avenue S Nashville, Tennessee	440039	10/28/03	TN	Decertified on 08/13/07.
Ochsner Clinic Foundation 1514 Jefferson Highway New Orleans, Louisiana	190036	09/09/09	LA	The hospital was decertified on 03/28/09 and became recertified on 09/09/09 when Joint Commission certification was obtained.
The University of Michigan Hospitals and Health Centers 1500 East Medical Center Drive Ann Arbor, MI	230046	03/28/08	MI	Joint Commission certified on 03/28/08.
Saint Mary's Hospital 1216 Southwest Second Street Rochester, MN 55902	240010	02/27/08	MN	Joint Commission certified on 02/27/08.
Allegheny General Hospital 320 East North Avenue Pittsburgh, PA 15212	390050	03/08/08	PA	Joint Commission certified on 03/08/08.
Washington Hospital Center 110 Irving Street, Northwest Washington, DC 20010	09-0011	04/23/08	DC	Joint Commission certified on 04/23/08.
Baylor University Medical Center 3500 Gaston Avenue Dallas, TX 75246	450021	10/04/07	TX	Joint Commission certified on 10/04/07
Integris Baptist Medical Center 3300 Northwest Expressway Oklahoma City, OK	1831103654	08/13/08	OK	Joint Commission certified on 08/13/08
Northwestern Memorial Hospital 251 E Huron Street Chicago, IL 60611	140281	03/17/09	IL	Joint Commission certified on 03/17/09.
Lancaster General Hospital 555 North Duke Street Lancaster, PA	390100	05/20/09	PA	Joint Commission certified on 05/20/09.
Hartford Hospital 80 Seymour Street Hartford, CT	070025	05/29/09	CT	Joint Commission certified on 05/29/09.
Mayo Clinic Hospital 5777 East Mayo Boulevard Phoenix, AZ	030103	02/27/09	AZ	Joint Commission certified on 2/27/09
Morristown Memorial Hospital 100 Madison Avenue Morristown, NJ	310015	06/17/09	NJ	Joint Commission certified on 6/17/09.

VAD Destination Therapy Facilities				
Facility	**Provider Number**	**Date Approved**	**State**	**Other Information**
Thomas Jefferson University Hospital 111 South 11th Street Philadelphia, PA	390174	08/05/09	PA	Joint Commission certified on 8/5/09.
Emory University Hospital 1364 Clifton Road Atlanta, GA	110010	08/19/09	GA	Joint Commission certified on 08/19/09.
Maine Medical Center 22 Bramhall Street Portland, ME	200009	02/03/09	ME	Joint Commission certified on 02/03/09.
Westchester Medical Center 100 Woods Road Valhalla, New York	330234	01/05/10	NY	Joint Commission certified on 01/05/10.
Baptist Health Medical Center-Little Rock 9601 Interstate 630, Exit 7 Little Rock, Arizona	040114	12/02/09	AR	Joint Commission certified on 12/02/09.
Sutter Memorial Hospital 5151 F Street Sacramento, California	050108	10/21/09	CA	Joint Commission certified on 10/21/09.
University of Kentucky Health Care – Chandler Hospital 800 Rose Street Lexington, KY	180067/1518 911338	02/11/09	KY	Joint Commission certified on 02/11/09.
Carolinas Medical Center 1000 Blythe Boulevard Charlotte, NC	340113	5/12/10	NC	Joint Commission certified on 05/12/10
Saint Luke's Hospital 4401 Wornall Road Kansas City, MO 64111	260138	06/16/10	MO	Joint Commission certified on 06/16/10.
Saint Joseph's Hospital of Atlanta 5665 Peachtree Dunwoody Road Atlanta, GA	110082	07/14/10	GA	Joint Commission certified on 07/14/10.
Robert Wood Johnson University Hospital One Robert Wood Johnson Place New Brunswick, NJ	310038	7/23/2010	NJ	Joint Commission certified on 07/23/10.
University Hospitals – Case Medical Center 11100 Euclid Avenue Cleveland, OH 44106	360137	02/10/10	OH	Joint Commission certified on 02/10/10.
Lankenau Hospital 100 Lancaster Avenue Wynnewood, PA 19096	439412	06/19/09	PA	Joint Commission certified on 06/19/09
Medical University of South Carolina Medical Center 169 Ashley Avenue Charleston, South Carolina	420004	09/24/10	SC	Joint Commission certified on 09/24/10.
Presbyterian Medical Center of the UPHS 39th and Market Street Philadelphia, PA 19104	390223	10/11/10	PA	Joint Commission certified on 10/11/10.
Tacoma General – Allenmore Hospital 315 Martin Luther King Jr. Way Tacoma, WA 98405	500129	11/04/10	WA	Joint Commission certified on 11/04/10.
Abbott Northwestern Hospital 800 East 38th Street Minneapolis, MN 55407	240057	11/17/10	MN	Joint Commission certified on 11/17/10
Nebraska Medical Center 987400 Nebraska Medical Center Omaha, NE 68198-7400	280013	02/02/11	NE	Joint Commission certified on 02/02/11.
Yale – New Haven Hospital 20 York Street New Haven, CT 06510-3202	070022	02/04/11	CT	Joint Commission certified on 02/04/11.
Stony Brook University Hospital Medical Center Nicolls Road Stony Brook, NY 11794-8503	330393	03/02/11	NY	Joint Commission certified on 03/02/11.
Saint Thomas Hospital / Saint Thomas Health Services 4220 Harding Road Nashville, TN 37205	440082	08/05/10	TN	Joint Commission certified on 08/05/10.

BILLING CODE 4120–01–C

Addendum XIII: Lung Volume Reduction Surgery (LVRS) (January Through March 2011)

Addendum XIII includes a listing of Medicare-approved facilities that are eligible to receive coverage for lung volume reduction surgery. Until May 17, 2007, facilities that participated in the National Emphysema Treatment Trial were also eligible to receive coverage.

The following three types of facilities are eligible for reimbursement for Lung Volume Reduction Surgery (LVRS):

- National Emphysema Treatment Trial (NETT) approved (Beginning 05/07/2007, these will no longer automatically qualify and can qualify only with the other programs);
- Credentialed by the Joint Commission (formerly, the Joint Commission on Accreditation of Healthcare Organizations (JCAHO)) under their Disease Specific Certification Program for LVRS; and
- Medicare approved for lung transplants.

Only the first two types are in the list.

LVRS Facilities				
Facility name	Provider Number	Date Approved	State	Type of Certification
Baylor College of Medicine Houston, TX			TX	NETT
Brigham and Women's Hospital Boston, MA			MA	NETT
Cedars-Sinai Medical Center Los Angeles, CA			CA	NETT
Chapman Medical Center Orange, CA			CA	NETT
Cleveland Clinic Foundation Cleveland, OH			OH	NETT
Columbia University New York, NY			NY	NETT
Duke University Medical Center Durham, NC			NC	NETT
Johns Hopkins Hospital Baltimore, MD			MD	NETT
Kaiser Foundation Hospital – Riverside 10800 Magnolia Avenue Riverside, CA 92505		11/01/08	CA	JCAHO
Long Island Jewish Medical Center New Hyde Park, NY			NY	NETT
Mayo Clinic Rochester, MN			MN	NETT
Memorial Medical Center 701 North First Street Springfield, IL 62781-0001		12/13/06	IL	JCAHO
National Jewish Medical Center Denver, CO			CO	NETT
The Ohio State University Hospital Room 168 Doan Hall Columbus, OH			OH	JCAHO
Ohio State University Medical Center Columbus, OH			OH	NETT
Saint Louis University Saint Louis, MO			MO	NETT
Temple University Hospital 3401 North Broad Street Philadelphia, PA		08/23/08	PA	JCAHO
UCLA Medical Center Los Angeles, CA			CA	NETT
University of California, San Diego San Diego, CA			CA	NETT
University of Maryland Medical Center Baltimore, MD			MD	NETT
University of Michigan Medical Center Ann Arbor, MI			MI	JCAHO
University of Pennsylvania Philadelphia, PA			PA	NETT
University of Pittsburgh Pittsburgh, PA			PA	NETT
University of Washington Seattle, WA			WA	NETT
Washington University/Barnes Hospital Saint Louis, MO			MO	JCAHO
Allegheny General Hospital 320 East North Avenue Pittsburgh, PA 15212		04/23/08	PA	JCAHO

For the purposes of this quarterly notice, we list all Medicare-approved facilities that meet the CMS standards as of the ending date of the period covered by this notice. Based on our proposal for future quarterly notices, we would provide only the specific updates that have occurred in the three-month period along with a hyperlink to the Web site to access this information and a contact person for questions or additional information.

This information is available on our Web site at *http://www.cms.gov/MedicareApprovedFacilitie/LVRS/list.asp#TopOfPage.*

For questions or additional information, contact JoAnna Baldwin, MS (410–786–7205).

Addendum XIV Medicare-Approved Bariatric Surgery Facilities (January Through March 2011)

Addendum XIV includes a listing of Medicare-approved facilities that meet minimum standards for facilities modeled in part on professional society statements on competency. All facilities must meet our standards in order to receive coverage for bariatric surgery procedures.

On February 21, 2006, we issued our decision memorandum on bariatric surgery procedures. We determined that bariatric surgical procedures are reasonable and necessary for Medicare beneficiaries who have a body-mass index (BMI) greater than or equal to 35, have at least one co-morbidity related to obesity and have been previously unsuccessful with medical treatment for obesity.

This decision also stipulated that covered bariatric surgery procedures are reasonable and necessary only when performed at facilities that are:

(1) Certified by the American College of Surgeons (ACS) as a Level 1 Bariatric Surgery Center (program standards and requirements in effect on February 15, 2006); or

(2) Certified by the American Society for Bariatric Surgery (ASBS) as a Bariatric Surgery Center of Excellence (BSCOE) (program standards and requirements in effect on February 15, 2006).

For the purposes of this quarterly notice, we list all Medicare-approved facilities that meet CMS's minimum facility standards for bariatric surgery and have been certified by ACS and/or ASMBS as of the ending date of the period covered by this notice. Based on our proposal for future quarterly notices, we would provide only the specific updates that have occurred in the three-month period along with a hyperlink to the Web site to access this information and a contact person for questions or additional information.

This information is available on our Web site at *http://www.cms.gov/MedicareApprovedFacilitie/BSF/list.asp#TopOfPage.*

For questions or additional information, contact Kate Tillman, RN, MAS (410–786–9252).

BILLING CODE 4120–01–P

Facility Name	Provider Number	Date approved	State	Other Information
Evanston Northwestern Hospital 2650 Ridge Avenue, Suite 1308 Evanston, IL 60201	140010	01/26/2006	IL	ACS
Chapman Medical Center 2601 East Chapman Avenue Orange, CA 92646	05-0745	01/13/2006	CA	ASMBS;
St Vincent Carmel Hospital 13500 Old Meridian Street Carmel, IN 46032	15-0157	02/20/2006	IN	ASMBS
Abbott Northwestern Hospital Minneapolis, MN	240057	02/24/2006	MN	ASMBS
American Bariatric Institute at Doctors' Hospital Shreveport, Louisiana	N/A	02/24/2006	LA	ASMBS
Arnot Ogden Medical Center 600 Roe Avenue Elmira, NY 14905	330090	02/24/2006	NY	ASMBS
AtlantiCare Regional Medical Center 1925 Pacific Avenue Atlantic City, NJ 08401	310064	02/24/2006	NJ	Center for Surgical Weight Loss and Wellness Salartash Surgical Associates; ASMBS
Atlanta Medical Center 303 Parkway Drive, NE Atlanta, Georgia 30312	110115	02/10/2006	GA	ASMBS
Aurora Sinai Medical Center 945 North 12 Street Milwaukee, Wisconsin 53233	520138	02/24/2006	WI	ASMBS
Baptist Memorial Hospital North Mississippi 2301 South Lamar Boulevard. P.O. Box 946 Oxford, MS 38655	250034	02/24/2006	MS	ASMBS
Bellin Health Green Bay, Wisconsin	N/A	02/24/2006	WI	ASMBS
Bon Secours Community Hospital 160 East Main Street Port Jervis, NY 12771	330135	02/24/2006	NY	ASMBS
California Pacific Medical Center 2300 California St. # 305 San Francisco, California 94115	N/A	12/9/2005	CA	ASMBS
Cape Fear Valley Health System 1638 Owen Drive Fayetteville, NC 28302	340028	12/16/2005	NC	ASMBS
Centennial Center for the Treatment of Obesity Nashville, TN	440161	02/24/2006	TN	ASMBS
Cleveland Clinic Florida 3100 Weston Road Weston, Florida 33331	100289	01/24/2006	FL	ASMBS
Citizen's Bariatric Center 2701 Hospital Drive Victoria, TX 77901	450023	02/24/2006	TX	ASMBS
Columbia - St. Mary's Bariatric Center Milwaukee, Wisconsin	52-0051	02/24/2006	WI	ASMBS
Crestwood Medical Center One Hospital Drive Huntsville, Alabama 35801	010131	02/10/2006	AL	ASMBS
Cypress Fairbanks Medical Center Hospital 10655 Steepletop Drive Houston, TX	450716	02/24/2006	TX	ASMBS
Danbury Hospital 24 Hospital Avenue Danbury, Connecticut	1548293343	02/24/2006	CT	ACS
East Texas Medical Center 1000 South Beckham Tyler, TX 75701	450083	02/24/2006	TX	ASMBS
Elmbrook Memorial Hospital Brookfield, Wisconsin	N/A	02/24/2006	WI	ASMBS
Emory Dunwoody Medical Center Atlanta, Georgia	N/A	02/24/2006	GA	ASMBS
Florida Hospital Celebration Health 400 Celebration Place Celebration, Florida 34747	10-0007	02/24/2006	FL	ASMBS
Florida Medical Center 5000 West Oakland Park Boulevard. Lauderdale Lakes, Florida 33313	100210	02/24/2006	FL	ASMBS
Froedtert Memorial Lutheran Hospital 9200 West Wisconsin Avenue Milwaukee, Wisconsin 53226	520177	02/24/2006	WI	Medical College of Wisconsin; ASMBS
Frye Regional Medical Center Hickory, NC	340116	02/24/2006	NC	ASMBS
Geisinger Medical Center 100 North Academy Avenue Danville, PA	390006; CMS #: 1235215427	N/A	PA	ASMBS - 02/24/2006 ACS - 01/26/2007
Good Samaritan Hospital 3219 Clifton Avenue Cincinnati, OH 45220	360134	02/24/2006	OH	ASMBS
Dayton Osteopathic Hospital DBA Grandview Medical Center 405 Grand Avenue Dayton, OH 45405	11/11/2005	02/24/2006	OH	ASMBS
Greater Baltimore Medical Center 6535 North Charles Street, Suite 125 Baltimore, MD 21204	21-0044	02/24/2006	MD	ASMBS
Hamilton Medical Center 1200 Memorial Drive Dalton, Georgia 30722	11-0001	02/24/2006	GA	ASMBS
Hennepin County Medical Center Minneapolis, MN	240004	02/24/2006	MN	ASMBS
Holy Cross Hospital 4725 North Federal Highway Fort Lauderdale, Florida 33308	10-0073	09/30/2005	FL	ASMBS
Hospital of Saint Raphael 1450 Chapel Street New Haven, CT 06511	071001	01/13/2006	CT	ASMBS
Huntington Memorial Hospital 100 West California Boulevard Pasadena, California 91105	05-0438	02/24/2006	CA	ASMBS
King's Daughters Medical Center 2201 Lexington Avenue Ashland, Kentucky 41101	180009	02/24/2006	KY	ASMBS
Legacy Good Samaritan Hospital and Medical Center 1040 NW 22nd Avenue Portland, OR 97210	380017	01/13/2006	OR	ASMBS
Lexington Medical Center 2720 Sunset Boulevard.West Columbia, SC	See other information	01/14/2008	SC	ACS; NPI: Hospital Services 1356366314; Professional Services 1144248097
Little Company of Mary 2800 West 95th Street Evergreen Park, Illinois 60805	140179	02/24/2006	IL	ASMBS
Medical University Hospital Authority 25 Courtenay Drive Charleston, SC 29425	42-0004	02/10/2006	SC	ASMBS
Memorial Hermann Hospital Houston, TX	45-0068	02/24/2006	TX	ASMBS
Memorial Hospital 2525 deSales Avenue Chattanooga, TN 37404	440091	02/24/2006	TN	ASMBS
Mercy San Juan Medical Center Carmichael, California	50516	02/24/2006	CA	ASMBS
Metabolic Surgery Center at Baptist Hospital Nashville, TN	11-0133	02/24/2006	TN	ASMBS
Methodist Dallas Medical Center Dallas, TX	45-0051	02/24/2006	TX	Texas Bariatric Center; ASMBS
Methodist Healthcare System San Antonio, TX	450388	02/24/2006	TX	ASMBS
Park Nicollet Methodist Hospital 6500 Excelsior Boulevard Saint Louis Park, MN	240053	02/24/2006	MN	ASMBS
Middlesex Hospital Middletown, Connecticut	70020	02/24/2006	CT	ASMBS
Methodist Hospital of Southern California 300 West Huntington Drive Arcadia, California 91007	14-0290	02/24/2006	CA	ASMBS
Mills-Peninsula Health Services 1501 Trousdale Drive Burlingame, California 94010	050007	02/24/2006	CA	ASMBS
New Hanover Regional Medical Center 2131 South Seventeenth Street Wilmington, NC	340141	02/24/2006	NC	ASMBS
New York Methodist Hospital 506 6th Street Brooklyn, NY 11215	330236	02/24/2006	NY	ASMBS
North Colorado Medical Center 1801 16th Street Greeley, Colorado 80631	N/A	02/24/2006	CO	ASMBS
North Vista Hospital 1409 East Lake Mead Boulevard North Las Vegas, NV 89030	200470861	01/20/2006	NV	ASMBS
Northeast Georgia Medical Center, Inc. 743 Spring Street NE Gainesville, GA 30501	110029	02/03/2006	GA	ASMBS

Facility Name	Provider Number	Date approved	State	Other Information
Carolinas Medical Center-NorthEast 920 Church Street North Concord, NC 28025	MD-341200001	02/24/2006	NC	ASMBS
Northwestern Memorial Hospital Chicago, Illinois	140281	02/24/2006	IL	Northwestern Medical Faculty Foundation ASMBS
Marion Community Hospital, Inc. 1431 SW First Avenue Ocala, Florida 34478	100212	02/24/2006	FL	ASMBS
Palms of Pasadena Hospital 1501 Pasadena Avenue St. Petersburg, Florida	100126	01/13/2006	FL	ASMBS
Orange Coast Memorial Medical Center 9920 Talbert Avenue Fountain Valley, California 92708	50678	11/4/2005	CA	ASMBS
Parkwest Medical Center Knoxville, TN	Part A: 3278770 Part B: 44-0173	02/24/2006	TN	ASMBS
Penrose - St. Francis Health Services 2222 North Nevada Avenue Colorado Springs, Colorado 80907	60031	02/24/2006	CO	ASMBS
Poudre Valley Hospital 1024 South Lemay Avenue Fort Collins, Colorado 80524	06-0010	02/24/2006	CO	ASMBS
Presbyterian - St. Luke's Medical Center 1719 E. 19th Avenue Denver, Colorado 80218	060014	10/28/2005	CO	ASMBS
Princeton HealthCare System Princeton, NJ	N/A	02/24/2006	NJ	ASMBS
Roger Williams Medical Center 825 Chalkstone Avenue Providence, RI	N/A	02/24/2006	RI	Drs. Lentrichia & Pohl, Inc.,ASMBS
Rose Medical Center 4567 E. Ninth Avenue Denver, Colorado 80220	060032	02/24/2006	CO	2 Central Bariatrics ASMBS
Saint Barnabas Medical Center 94 Old Short Hills Road Livingston, NJ 07039	310076	01/24/2006	NJ	ASMBS
Saint Francis Hospital Memphis, TN	440183	02/24/2006	TN	ASMBS
St. Francis Hospital - Franciscan Health System Federal Way, Washington	500141	02/24/2006	WA	N/A
Saint Joseph East Center for Weight Loss Lexington, Kentucky	180143	02/24/2006	KY	ASMBS
Saint Mary's Regional Medical Center 235 West Sixth Street Reno, NV 89503	29-0009	2/10/2006	NV	ACS (05/29/2009); ASMBS
St. Mary's Hospital 5801 Bremo Road Richmond, Virginia 23226	490059	02/24/2006	VA	ASMBS
Scottsdale Healthcare Shea Campus Scottsdale, Arizona	03-0087	02/24/2006	AZ	ASMBS
Scripps Memorial La Jolla 9834 Genesee Road #328 La Jolla, California 92037	1841277704	02/24/2006	CA	ASMBS
Scripps Mercy Hospital 4077 Fifth Avenue San Diego, California 92103	050077	02/24/2006	CA	ASMBS
Sentara Careplex Hospital 3000 Coliseum Drive Hampton, Virginia 23666	49-0093	02/24/2006	VA	ASMBS
Sisters of Charity Hospital 2157 Main Street Buffalo, NY 14214	330078	02/24/2006	NY	ASMBS
Sioux Valley Hospital USD Medical Center Sioux Falls, SD	N/A	02/24/2006	SD	ASMBS
Sound Shore Medical Center of Westchester Sound Shore Medical Center-Bariatrics-8th Floor New Rochelle, NY 10801	330184	02/24/2006	NY	ASMBS
South Nassau Communities Hospital One Healthy Way Oceanside, NY 11572	1113252310	02/24/2006	NY	ASMBS
Southwest Healthcare System 36485 Inland Valley Drive Wildomar, California	PTAN – 050701 NPI - 1245221050	02/24/2006	CA	ASMBS
The Regional Medical Center of Acadiana 2810 Ambassador Caffery Pkwy Lafayette, Louisiana 70506	190205	09/23/2005	LA	ASMBS
Spectrum Health Hospital 1840 Wealthy Street, SE Grand Rapids, MI 49506	23-0038	02/24/2006	MI	MMPC Center for Health Excellence ASMBS
SSM DePaul Health Center 12266 DePaul Drive Suite 310 Bridgeton, MO 63044	924493572	02/24/2006	MO	ASMBS
St. Joseph's Area Health Services Park Rapids, MN	241380	02/24/2006	MN	ASMBS
St. Vincent Charity Hospital 2322 East 22nd St. Suite 207 Cleveland, OH 44115	UH3600371 NPI 1710951801	01/20/2006	OH	ASMBS
Staten Island University Hospital 475 Seaview Avenue Staten Island, NY 10305	330160	11/18/2005	NY	ASMBS
Theda Clark Medical Center 130 Second Street Neenah, WI 54956	52-0045	10/21/2005	WI	ACS; ASMBS
The Ohio State University Hospital 2050 Kenny Road Columbus, OH 43221	360085	10/14/2005	OH	ASMBS
The Regional Medical Center at Memphis, Memphis, TN	N/A	02/24/2006	TN	ASMBS
Tri-City Regional Medical Center 21530 S. Pioneer Boulevard. Hawaiian Gardens, California 90716	050575	02/24/2006	CA	ASMBS
United Hospital 333 North Smith Avenue MS 60234 Saint Paul, MN 55102	24-0038	02/24/2006	MN	ASMBS
United Regional Health Care System 1600 11th Street Wichita Falls, TX 76301	1992783013	02/24/2006	TX	ASMBS
Unity Hospital Fridley, MN	240132	02/24/2006	MN	ASMBS
University of Chicago Medical Center 5841 S. Maryland Ave. MC 5030 Chicago, Illinois 60637	140088	02/24/2006	IL	University of Chicago Department of Surgery ASMBS
University of Minnesota Medical Center, Fairview 2450 Riverside Avenue South Minneapolis, MN 55454	24-0080	02/24/2006	MN	ASMBS
UPMC St. Margaret 100 Delafield Road, Suite 210 Pittsburgh, PA 15215	390102	02/24/2006	PA	ASMBS
UPMC Horizon Greenville, PA	390178	02/24/2006	PA	ASMBS
Virginia Commonwealth University Medical Center Richmond, Virginia	Kellum:20000094 Maher:004732m98	02/24/2006	VA	ASMBS
Weight Loss Surgery Program at Baylor Dallas, TX	1447250253	02/24/2006	TX	ASMBS
Wellstar Health Systems 780 Canton Road Suite 320 Marietta, Georgia 30060	110035	02/24/2006	GA	ASMBS
White Plains Hospital Center White Plains, NY	N/A	02/24/2006	NY	ASMBS
York Hospital York, PA	390046	02/24/2006	PA	ASMBS
Norman Regional Hospital 901 North Porter, Box 1308 Norman, OK 73070	370008	03/10/2006	OK	ASMBS
St. Luke's Medical Center 1800 E. Van Buren, Suite 307B Phoenix, Arizona 85006	030037	03/22/2006	AZ	Abdominal Surgeons, Ltd. ASMBS
Silver Cross Hospital 1200 Maple Rd Joliet, Illinois 60432	140213	03/10/2006	IL	Midwest Comprehensive Bariatrics ASMBS
Tampa General Hospital 2 Columbia Drive, F145 Tampa, FL 33601	100128	03/03/2006	FL	University of South Florida ASMBS

Facility Name	Provider Number	Date approved	State	Other Information
Spartanburg Regional Healthcare System 101 East Wood Street Spartanburg, SC 29303	420007	03/22/2006	SC	ASMBS
OSF Saint Francis Medical Center 530 N.E. Glen Oak Avenue Peoria, IL 61637	140067	04/05/2006	IL	ASMBS
Palmetto Health Baptist 1850 Laurel Street, Suite 1A Columbia, SC 29201	420086	03/31/2006	SC	ASMBS
Peconic Bay Medical Center 1300 Roanoke Avenue Riverhead, NY 11901	330107	03/31/2006	NY	ASMBS
Desert Springs Hospital 2075 East Flamingo Las Vegas, NV 89119	290022	03/22/2006	NV	ASMBS
Palmetto General Hospital 2001 West 68th Street Hialeah, FL 33016	100187	04/05/2006	FL	ASMBS - 04/11/2006 ACS - 05/30/2008
Hurley Medical Center One Hurley Plaza Flint, MI 48503-5993	230132	04/14/2006	MI	ACS
University of California, Davis 2221 Stockton Boulevard. Cypress Building, 3rd Fl Sacramento, CA 95817	050599	03/24/2006	CA	ASMBS
Western Pennsylvania Hospital 4800 Friendship Avenue Pittsburgh, PA 15224	028672	04/27/2006	PA	ASMBS - 04/27/2006 ACS - 10/16/2006
Bothwell Regional Health Center 601 East 14th Street Sedalia, MO 65301	260009	05/17/2006	MO	ASMBS
Durham Regional Hospital 3643 N. Roxboro Road Durham, NC 27704	340155	01/13/2006	NC	ASMBS
Fairview Southdale Hospital 6405 France Ave S, Ste W320 Edina, MN 55435	240078	05/17/2006	MN	ASMBS
Cleveland Clinic 9500 Euclid Ave. (A80) Cleveland OH 44195	360180	N/A	OH	05/24/2006 – ASMBS 12/01/2006 - ACS
St. Agnes Healthcare 900 Caton Avenue Baltimore MD 21229	210011	05/24/2006	MD	ASMBS
Kettering Medical Center – Sycamore 2150 Leiter Road Miamisburg, OH 45342	360239	05/19/2006	OH	ASMBS
Albany Medical Center 47 New Scotland Avenue Albany, NY 12208	330013	06/02/2006	NY	ACS
Georgetown Community Hospital 1140 Lexington Road Georgetown KY 40324	180101	06/05/2006	KY	ASMBS
Fletcher Allen Health Care 111 Colchester Avenue Burlington, VT 05401	N/A	06/09/2006	VT	Hospital: 470003 Group Provider: VN0997 ACS
New York-Presbyterian Hospital/Columbia University Medical Center 622 W. 168th Street New York, NY 10032	330101	06/14/2006	NY	ACS
Providence Memorial Hospital 2001 North Oregon El Paso TX 79902	450002	5/30/2006	TX	ASMBS
Cedars-Sinai Medical Center 8700 Beverly Boulevard. Los Angeles, CA 90048	CMS #: 1639172372	06/20/2006	CA	Thalians - 2W; ACS
Community Medical Center – Clovis 2755 Herndon Avenue Clovis, CA 93611	050492; CMS# 1316027709	N/A	CA	ACS - 06/26/2006
Oregon Health & Science University 3181 SW Sam Jackson Park Road, L223A Portland, OR 97239	See other information	06/27/2006	OR	OHSU Medical Group - 107708 OHSU Hospital – 380009 ACS
Hospital of the University of Pennsylvania 3400 Spruce Street, 4 Silverstein Philadelphia PA 19104	231352686	06/19/2006	PA	ASMBS
Swedish Medical Center 501 East Hampden Avenue Englewood CO 80113	060034	6/19/2006	CO	ASMBS
Blount Memorial Hospital 907 East Lamar Alexander Parkway Maryville TN 37801	440011	07/06/2006	TN	ASMBS
University of Virginia Health System P.O. Box 800809 Charlottesville, VA 22908-0809	490009	07/12/2006	VA	ACS
Heritage Valley Sewickley 720 Blackburn Road Sewickley PA 15143	390037	07/13/2006	PA	ASMBS
The Christ Hospital 2139 Auburn Avenue Cincinnati OH 45219	36-0163	07/17/2006	OH	ASMBS
Cabell Huntington Hospital 1340 Hal Greer Boulevard Huntington, WV 25701	510055	07/10/2006	WV	ASMBS
Mount Sinai Hospital One Gustave L. Levy Place, 1190 5th Avenue New York, NY 10029	330024	07/06/2006	NY	ASMBS
UMass Memorial Medical Center-Memorial Campus 119 Belmont Street Worcester, MA, 01605	CMS #: 1831151455	07/27/2006	MA	ACS
Henry Ford Hospital 2799 West Grand Boulevard Detroit, MI 48202	381357020	07/25/2006	MI	ASMBS
Vista Surgical Hospital 9094 Perkins Road, Suite B Baton Rouge LA 70810	230053	07/31/2006	LA	ASMBS
New York-Presbyterian Hospital/Weill Cornell Medical Center 630 West 168th Street New York, NY 10032	330101	08/04/2006	NY	ACS
Marina del Rey Hospital (formerly Centinela Freeman Regional Medical Center) 4650 Lincoln Avenue Marina del Rey, CA 90292	050740	08/02/2006	CA	ASMBS
NYU Langone Medical Center 560 First Avenue New York NY 10016	330214	7/25/2006	NY	ASMBS
Regional West Medical Center 4021 Avenue B Scottsbluff NE 69361	280061	07/26/2006	NE	ASMBS
Mercy Medical Center 1000 North Village Avenue Rockville Centre NY 11570	330259	08/10/2006	NY	ASMBS
Brigham and Women's Hospital 75 Francis Street Boston, MA 02115-6195	1790717650	08/14/2006	MA	ACS
Highland Hospital 1000 South Avenue Rochester, NY 14620	330164 NPI# 1497941645	08/30/2006	NY	ACS
Inova Fair Oaks Hospital 3600 Joseph Siewick Drive Fairfax VA 22033	490101	08/28/2006	VA	ASMBS
Our Lady of Lourdes Medical Center 1600 Haddon Avenue Camden NJ 08104	613039	08/28/2006	NJ	ASMBS
Hamot Medical Center 201 State Street Erie PA 16550	390063	08/28/2006	PA	ASMBS
St. Alexius Hospital – NewStart 3933 South Broadway Street St. Louis MO 63118	260210	08/29/2006	MO	ASMBS
St. Catherine of Siena Medical Center 50 Route 25A Smithtown NY 11787	316495	09/01/2006	NY	ASMBS
Barnes Jewish Hospital One Barnes-Jewish Hospital Plaza St. Louis MO 63110	260032	09/06/2006	MO	ASMBS
Baptist Memorial Hospital Memphis 6019 Walnut Grove Road Memphis TN 38120	440048	08/28/2006	TN	ASMBS
Norwalk Hospital 24 Stevens Street Norwalk CT 06856	070034	08/31/2006	CT	ASMBS
North Shore University Hospital at Manhasset 300 Community Drive Manhasset NY 11530	330106	08/29/2006	NY	ASMBS
St. Vincent's Medical Center 2800 Main Street Bridgeport, CT 06606	070028	08/31/2006	CT	Level 3 - Department of Surgery ASMBS
Faxton-St. Luke's Healthcare 1656 Champlin Avenue Utica NY 13503	330044	09/14/2006	NY	ASMBS
St. Joseph's Hospital 69 West Exchange St. Paul MN 55102	24-0063	8/29/2006	MN	ASMBS
Johns Hopkins Bayview Medical Center 4940 Eastern Avenue Baltimore MD 21224	210029	09/15/2006	MD	ASMBS; ACS (08/21/2009)
University Hospitals Case Medical Center 11100 Euclid Avenue Cleveland OH 44106	140119	08/28/2006	OH	ASMBS
Yale-New Haven Hospital 20 York Street New Haven CT 06510	070022	09/20/2006	CT	ASMBS

Facility Name	Provider Number	Date approved	State	Other Information
Avera McKennan Hospital 800 East 21st Street, Box 5045 Sioux Falls, SD 57117-5045	430016	09/25/2006	SD	ASMBS
Memorial Hospital Jacksonville 3625 University Boulevard South Jacksonville, FL 32216	100179	09/22/2006	FL	ASMBS
Fountain Valley Regional Hospital 17100 Euclid Street Fountain Valley, CA 92708	050570	09/22/2006	CA	ASMBS
Sentara Norfolk General Hospital 600 Gresham Drive Norfolk, VA 23507	4900073	09/29/2006	VA	ACS
Trinity Medical Center 800 Montclair Road Birmingham, AL 35213	010104	09/22/2006	AL	ASMBS
MeritCare Health System 720 4th Street North Fargo, ND 58122	350011	10/03/2006	ND	ASMBS
St. Luke's/Roosevelt 1111 Amsterdam Avenue New York, NY 10025	330046/ CMS #: 1104982917	10/11/2006	NY	ACS; 10th Floor
Benefis Healthcare 1101 26th Street South Great Falls, MT 59405	270012	10/13/2006	MT	ASMBS
Norton Hospital 200 East Chesnut Street Louisville, KY 40202	180088	09/22/2006	KY	ASMBS
Port Huron Hospital 1221 Pine Grove Avenue Port Huron, MI 48060	230216	10/12/2006	MI	ASMBS
Harper University Hospital 3990 John R. Street Detroit, MI 48201	230104	10/3/2006	MI	ASMBS
St. Luke Hospital 7380 Turfway Road Florence, KY 41042	195001	10/18/2006	KY	ASMBS
Twelve Oaks Medical Center Hospital 4200 Twelve Oaks Drive Houston, TX 77027	HH0593	10/18/2006	TX	ASMBS
Cleveland Clinic Florida 3100 Weston Road Weston, FL 33331-3602	100289; CMS #: 1083644033	10/19/2006	FL	ACS
Grinnell Regional Medical Center 210 Fourth Avenue Grinnell, IA 50112	N/A	10/19/2006	IA	Provider Numbers: Hospital: 160147, Surgical Group: 03108 ACS
Alta Bates Medical Center 350 Hawthorne Avenue Oakland, CA 94609	050043	10/11/2006	CA	ASMBS
Massachusetts General Hospital 55 Fruit Street Boston, MA 02114-2696	220071	10/23/2006	MA	ACS
Mayo Clinic-Saint Mary's Hospital 200 First Street SW Rochester, MN 55905	N/A	10/23/2006	MN	SMH: 24-0010 Part B General Medical: C01384 ACS
Saint Francis Hospital 6465 South Yale Avenue, #900 Tulsa, OK 74136	370091	10/23/2006	OK	ACS
Newton-Wellesley Hospital 2014 Washington Street Newton, MA 02462	CMS #: 1407855752	10/26/2006	MA	ACS
Mobile Infirmary Medical Center 5 Mobile Infirmary Circle Mobile, AL 36007	010113	10/23/2006	AL	ASMBS
Magee Womens Hospital of UPMC 3000 Halket Street Pittsburgh, PA 15213	390114	11/06/2006	PA	ASMBS
Saint Francis Hospital and Medical Center 114 Woodland Street Hartford, CT 06105	070002	11/15/2006	CT	ASMBS
South Jersey Healthcare - Regional Medical Center 1505 West Sherman Avenue Vineland, NJ 08360	310032	11/06/2006	NJ	ASMBS
Overlook Hospital 99 Beauvoir Avenue Summit, NJ 07902	310051	11/15/2006	NJ	Nursing Administration Office ASMBS
Cedars Medical Center 1400 Northwest 12 Avenue Miami, FL 33136	100009	11/23/2006	FL	ASMBS
Memorial Hermann Memorial City Hospital 921 Gessner Road Houston, TX 77024	450610	11/20/2006	TX	ASMBS
Tufts - New England Medical Center 750 Washington Street Boston, MA 02111	220116	10/23/2006	MA	ASMBS
Allegheny General Hospital 320 East North Avenue Pittsburgh, PA 15212	390050	11/21/2006	PA	Fifth Floor, South Tower ASMBS
Northwest Medical Center 2801 North State Road 7 Margate, FL 33063	100189	11/21/2006	FL	ASMBS
Potomac Hospital 2300 Opitz Boulevard Woodbridge, VA 22191	490113	11/20/2006	VA	ASMBS
Baptist Health Medical Center - Little Rock 9601 I-630, Exit 7 Little Rock, AR 72205	040114	11/17/2006	AR	ASMBS
University of Washington Medical Center 1959 NE Pacific Street, P.O. Box 356151 Seattle, WA 98195-6151	1326002049	12/05/2006	WA	ACS
St. Luke's Regional Medical Center 333 North 1st Street, Suite 120 Boise, ID 83702	130006	11/30/2006	ID	ASMBS
University of Alabama at Birmingham Hospital 1530 3rd Avenue South, Kracke Building 404, Birmingham, AL 35294-0016	010033	12/07/2006	AL	ACS
Hackensack University Medical Center 30 Prospect Avenue Hackensack, NJ 07601	310001	12/08/2006	NJ	ACS
Hialeah Hospital 651 East 25 Street Hialeah, FL 33013	100053	12/05/2006	FL	ASMBS
Sts. Mary and Elizabeth Hospital 1850 Bluegrass Avenue Louisville, KY 40215	180040	12/08/2006	KY	Bariatric Office ASMBS
Bon Secours Surgical Weight Loss - Maryview Medical Center 3636 High Street Portsmouth, VA 23707	490017	12/12/2006	VA	ASMBS
Pomerado Hospital 15615 Pomerado Road Poway, CA 92064	050636	11/30/2006	CA	ASMBS
Boston Medical Center 88 E. Newton Street, D507-Dept. of Surgery Boston, MA 02118	220031; CMS #: 1346218294	12/19/2006	MA	ACS
Medcenter One, Inc. 300 North 7th Street Bismarck, ND 58501	350015	12/13/2006	ND	ASMBS
Meriter Hospital 202 South Park Street Madison, WI 53715	520089	12/12/2006	WI	ASMBS
University of Wisconsin Hospital & Clinics 600 Highland Avenue Madison, WI 53792	520098	12/12/2006	WI	ASMBS
Women and Children's Hospital 4200 Nelson Road Lake Charles, LA 70605	190201	12/13/2006	LA	ASMBS
Mount Carmel West Hospital 793 West State Street Columbus, OH 43222	360035	12/18/2006	OH	ASMBS
Southcoast Hospitals Group - Tobey Hospital 43 High Street Wareham, MA 02571	220074	12/18/2006	MA	ASMBS
Carilion Roanoke Memorial Hospital 1906 Belleview Avenue Roanoke, VA 24014	54-0506332	12/13/2006	VA	ASMBS
Mercy Health Partners 1500 Sherman Boulevard Muskegon, MI 49444	230004	12/13/2006	MI	ASMBS
Mountainside Hospital 1 Bay Avenue Montclair, NJ 07042	310054	12/14/2006	NJ	ASMBS
Park Plaza Hospital 1313 Hermann Drive Houston, TX 77004	450659	12/13/2006	TX	ASMBS
Renaissance Hospital Houston 427 W. 20th St., Suite 300 Houston, TX 77008	450795	01/12/2007	TX	ASMBS
Penn State Milton S. Hershey Medical Center 500 University Drive Hershey, PA 17033	390256	01/08/2007	PA	ASMBS
Shawnee Mission Medical Center 9100 West 74th Street Shawnee Mission, KS 66204	170104	01/22/2007	KS	ASMBS
Morristown Memorial Hospital 100 Madison Avenue Morristown, NJ 07962	1053384776	01/25/2007	NJ	ACS
Alvarado Hospital 6655 Alvarado Road San Diego, CA 92120	050757	01/22/2007	CA	Alvarado Surgical Weight-Loss Program

Facility Name	Provider Number	Date approved	State	Other Information
				ASMBS
St. Francis Hospital 7th and Clayton Streets Wilmington, DE 19805	080003	01/29/2007	DE	ASMBS
Ochsner Clinic Foundation 1514 Jefferson Highway New Orleans, LA 70121	190036	02/01/2007	LA	University Hospitals of Cleveland ASMBS
Northwest Specialty Hospital 1593 East Polston Avenue Post Falls, ID 83854	13-0066	02/07/2007	ID	ASMBS
Sacred Heart Hospital 421 Chew Street Allentown, PA 18102	390197	02/07/2007	PA	ASMBS
Rio Grande Regional Hospital 101 East Ridge Road McAllen, TX 78503	450711	02/06/2007	TX	ASMBS
Gundersen Lutheran Medical Center 1900 South Avenue La Crosse, WI 54601	520087	02/01/2007	WI	ASMBS
Kettering Medical Center 3535 Southern Boulevard Kettering, OH 45429	360079	02/12/2007	OH	ASMBS
Beth Israel Deaconess Medical Center 330 Brookline Avenue Boston, MA 02215	N/A	02/17/2006	MA	ACS
Shady Grove Adventist Hospital 9901 Medical Center Drive Rockville, MD 20850	210057	02/06/2007	MD	ASMBS
Pitt County Memorial Hospital 2100 Stantonsburg Road Greenville, NC 27835	340040	02/12/2007	NC	ASMBS
St. Cloud Hospital 1406 Sixth Avenue, North St. Cloud, MN 56303	240036	02/06/2007	MN	ASMBS
Virginia Mason Medical Center 1100 Ninth Avenue Seattle, WA 98101	500005	02/12/2007	WA	ASMBS
Southeast Georgia Health System 2415 Parkwood Drive Brunswick, GA 31520	110025	02/12/2007	GA	ASMBS
Baystate Medical Center 759 Chestnut Street Springfield, MA 01199	220077	03/13/2007	MA	ACS
PinnacleHealth Community Campus 4300 Londonderry Road, c/o P.O. Box 8700 Harrisburg, PA 17109	390067	03/29/2007	PA	ASMBS
The Valley Hospital 223 North Van Dien Avenue Ridgewood, NJ 07450	310012	03/30/2007	NJ	ASMBS
Charleston Area Medical Center 800 Pennsylvania Avenue Charleston, WV 25302	510022	04/16/2007	WV	ASMBS
Texas Health Presbyterian Hospital Dallas 8200 Walnut Hill Lane Dallas, TX 75231	450462	04/04/2007	TX	ASMBS
Dekalb Medical Center 2701 North Decatur Road Decatur, GA 30033	110076	04/23/2007	GA	ASMBS
St. Francis Health Center 1700 SW 7th Street Topeka, KS 66606	170016	04/26/2007	KS	ASMBS
St. Mark's Hospital 1200 East 3900 South Salt Lake City, UT 84124	460047	04/26/2007	UT	ASMBS
George Washington University Hospital 9000 23rd Street NW Washington, DC 20037	090001	08/01/2006	DC	ASMBS
William Beaumont Hospital - Royal Oak 3601 West Thirteen Mile Road Royal Oak, MI 48073-6769	230130; CMS #: 1689653305	04/20/2007	MI	ACS
Princeton HealthCare System 253 Witherspoon Street Princeton, NJ 08540	31-0010	02/24/2006	NJ	ASMBS
Winchester Hospital 41 Highland Avenue Winchester, MA 01890	220105	05/29/2007	MA	ASMBS
Lawrence Memorial Hospital - Hallmark Health System 170 Governors Avenue Medford, MA 02155	220070	05/29/2007	MA	ASMBS
The Methodist Hospital 6565 Fannin Street, NB1-001 Houston, TX 77030	450358	03/22/2007	TX	ACS
ValleyCare Health System 1111 East Stanley Boulevard Livermore, CA 94550	050283	05/30/2007	CA	ASMBS
The Presbyterian Hospital 200 Hawthorne Lane Charlotte, NC 28204	340053	06/06/2007	NC	ASMBS
Nix Hospital 414 Navarro Street San Antonio, TX 78205	450130	06/08/2007	TX	ASMBS
Huntsville Hospital 101 Sivley Road Huntsville, AL 35801	010039	04/19/2007	AL	ASMBS
The Jewish Hospital 4777 Galbraith Road Cincinnati, OH 45236	360016	06/07/2007	OH	ASMBS
UCI Medical Center 101 The City Drive South Orange, CA 92868	050348	05/25/2007	CA	ACS
Kaiser Permanente Medical Center Richmond 901 Nevin Avenue Richmond, CA 94801	050075	05/24/2007	CA	ACS
Green Hospital 12395 El Camino Real San Diego, CA 92130	050424	06/21/2007	CA	ASMBS
Munroe Regional Medical Center 1500 Southwest 1st Avenue Ocala, FL 34471	100062	05/31/2007	FL	ASMBS
Enloe Medical Center 251 Cohasset Road Chico, CA 95926	050039	06/01/2007	CA	ASMBS
St. Francis Hospital & Health Centers 1600 Albany Street Beech Grove, IN 46107	150033	05/30/2007	IN	ASMBS
Southern Surgical Hospital 1700 West Lindberg Drive Slidell, LA 70458	190270	06/01/2007	LA	ASMBS
Peninsula Regional Medical Center 100 East Carroll Street Salisbury, MD 21801	210019	05/31/2007	MD	ASMBS
Wadley Regional Medical Center 1000 Pine Street Texarkana, TX 75501	450200	06/01/2007	TX	ASMBS
Surgery Specialty Hospital of America - SE Campus 4301 Vista Road Pasadena, TX 77504	450831	06/22/2007	TX	ASMBS
St. David's Medical Center 919 East 32nd Street Austin, TX 78705	450431	06/22/2007	TX	ASMBS
Sanford USD Medical Center 1305 West 18th Street Sioux Falls, SD 57117	430027	12/30/2005	SD	ASMBS
Weight Loss Surgery Program at BUMC 3500 Gaston Avenue Dallas, TX 75246	1447250253	01/06/2006	TX	ASMBS
Shelby Baptist Medical Center 1000 First Street N. Alabaster, AL 35007	010016	05/18/2007	AL	ACS
Lehigh Valley Hospital and Health Network Cedar Crest & I-78 P.O. Box 689 Allentown, PA 18105-1556	390133; CMS# 1164400131	05/29/2007	PA	ACS
West Hills Hospital 7300 Medical Center Drive West Hills, CA 91307	050481	06/27/2007	CA	ASMBS
Adirondack Medical Center 2233 State Route 86 Saranack Lake, NY 12983	330079	06/26/2007	NY	ASMBS
Kaleida Health, Buffalo General Hospital 100 High Street Buffalo, NY 14203	300005	06/01/2007	NY	ASMBS
Miami Valley Hospital One Wyoming Street Dayton, OH 45409	360051	06/25/2007	OH	ASMBS
Minimally Invasive Surgery Hospital 11217 Lakeview Avenue Lenexa, KS 66219	170199	06/25/2007	KS	ASMBS
Sartori Memorial Hospital 515 College Street Cedar Falls IA 50613	160040	07/17/2007	IA	ASMBS
Maimonides Medical Center 948 48th Street, 2nd floor Brooklyn NY 11219	33-0194	07/10/2007	NY	ASMBS
Westchester Medical Center 95 Grasslands Road Valhalla NY 10595	W94181	07/17/2007	NY	ASMBS
Deaconess Hospital 311 Straight Street Cincinnati OH 45219	36-0038	07/17/2007	OH	ASMBS
Northern Ohio Bariatric Center at Parma Hospital 6305 Powers Boulevard Parma OH 44129	360041	07/10/2007	OH	ASMBS

Facility Name	Provider Number	Date approved	State	Other Information
Einstein at Elkins Park 60 E. Township Line Road Elkins Park PA 19027	390142	07/10/2007	PA	ASMBS
Lahey Clinic Medical Center 41 Mall Road Burlington, MA 01805	220171 1558392563	06/22/2007	MA	ACS
St. Francis Hospital – Franciscan Health System 4509 Ninth Avenue South MOB Suite 310 Federal Way, WA 98003	500141	07/26/2007	WA	ASMBS
California Foundation for Health 1401 Garces Highway Delano CA 93215	050608	07/10/2007	CA	dba Delano Regional Medical Center ASMBS
Northeast Alabama Regional Medical Center 400 East 10th Street Anniston, AL 36207	010078	07/30/2007	AL	ASMBS
Baylor Medical Center at Carrollton 4343 N. Josey Lane Carrollton, TX 75010	45-0730	07/30/2007	TX	ASMBS
Gratiot Medical Center 300 E. Warwick Drive Alma, MI 48801	23-0030	07/30/2007	MI	ASMBS
Cuyuna Regional Medical Center 320 East Main Street Crosby, MN 56441	241353	08/20/2007	MN	ASMBS
Valley Medical Center 400 South 43rd Street Renton, WA 98055	500088	07/30/2007	WA	ASMBS
St. Anthony's Hospital 2807 Little York Road Dallas, TX 75224	450795	03/18/2009	TX	ASMBS
Clarian North Medical Center 11700 North Meridian Street Carmel, IN 46032	15-0161	08/20/2007	IN	ASMBS
Genesis Medical Center 1227 East Rusholme Street Davenport, IA 52803	160033	08/08/2007	IA	ASMBS
University of Texas Medical Branch 301 University Boulevard Galveston, TX 77555-1168	450018	08/16/2007	TX	ACS
Summa Health Systems Hospital 525 East Market Street Akron, OH 44309	360020	09/17/2007	OH	ASMBS
Memorial Regional Hospital 3500 Johnson Street Hollywood, FL 33021	100038	09/11/2007	FL	ASMBS
Temple University Hospital 3401 North Broad Street Philadelphia, PA 19140	390027	09/21/2007	PA	ASMBS
Good Samaritan Hospital 2425 Samaritan Drive San Jose, CA 95124	50380	09/21/2007	CA	ASMBS
Johnson City Medical Center 400 North State of Franklin Road Johnson City, TN 37604	440063	09/27/2007	TN	ASMBS
Providence Saint Joseph Medical Center 201 South Buena Vista Street, Suite 425 Burbank, CA 91505	50235	09/11/2007	CA	ASMBS - 09/17/2007 ACS - 09/05/2007
Hillcrest Hospital 729 SE Main Street Simpsonville, SC 29680	42-0037	10/10/2007	SC	ASMBS
Fairway Medical 67252 Industry Lane Covington, LA 70433	190267	10/10/2007	LA	ASMBS
John T. Mather Memorial Hospital 75 North Country Road Port Jefferson, NY 11777	JTM 33-0185	10/10/2007	NY	ASMBS
Lenox Hill Hospital 100 East 77th Street New York, NY 10021	330119	10/10/2007	NY	ASMBS
Easton Hospital 250 South 21st Street Easton, PA 18042	390162	11/22/10	PA	ASMBS
Columbia Hospital at Medical City Dallas 7777 Forest Lane, Suite 240A Dallas, TX 75230	45-0647	10/10/2007	TX	ASMBS
Baptist Hospital Bariatric Center 1000 West Moreno Street Pensacola, FL 32501	10-0093	09/27/2007	FL	ASMBS
St Vincent's East 50 Medical Park East Drive Birmingham, AL 35235	010011	10/10/2007	AL	ASMBS
Missouri Bariatric Services 1000 W. Nifong, Building 2, Suite 210 Columbia, MO 65203	000011108	10/10/2007	MO	ASMBS
Christiana Care Health Services 4755 Ogletown - Stanton Road Newark, DE 19718	080001; 1134194038	08/26/2007	DE	ASMBS
University General Hospital 7501 Fannin Street Houston, TX 77054	670019	08/08/2007	TX	ASMBS
Ellis Hospital 1101 Nott Street Schenectaday, NY 12308	330153	06/19/2007	NY	ASMBS
Presbyterian Hospital of Plano 6200 West Parker Road Plano, TX 75093	45-0771	10/10/2007	TX	ASMBS
Norton Suburban Hospital 4001 Dutchmans Lane Louisville, KY 40207	180088	10/10/2007	KY	ASMBS
The Methodist Hospitals, Inc.8701 Broadway Merrillville, IN 46410	150002	10/30/2007	IN	ASMBS
Parkview Community Hospital 3865 Jackson Street Riverside, CA 92503	050102	10/31/2007	CA	ASMBS
Sky Ridge Medical Center 10101 RidgeGate Parkway Lone Tree, CO 80124	060112	10/30/2007	CO	ASMBS
St. Mary Medical Center 1050 Linden Avenue Long Beach, CA 90813	050191	10/30/2007	CA	ASMBS
Stanford Hospital and Clinics 300 Pasteur Drive Stanford, CA 94305	050441	09/13/2007	CA	ACS
Scott and White Hospital 2401 S. 31st Street Temple, TX 76508	450054	10/24/2007	TX	ACS
The Methodist Hospitals, Inc. 303 East 89th Avenue Merrillville, IN 46410	150132	10/30/2007	IN	ASMBS
Parkview Community Hospital 3865 Jackson Street Riverside, CA 92503	050102	10/30/2007	CA	ASMBS
Sky Ridge Medical Center 10101 RidgeGate Parkway Lone Tree, CO 80124	060112	10/30/2007	CO	ASMBS
St. Mary Medical Center 1050 Linden Avenue Long Beach, CA 90813	050191	10/30/2007	CA	ASMBS
Evergreen Hospital 12040 NE 128th Street Kirkland, WA 98034	500124	10/30/2007	WA	ASMBS
El Camino Hospital 2500 Grant Road Mountain View, CA 94039	050308	11/19/2007	CA	ASMBS
Northeast Baptist Hospital 8811 Village Drive San Antonio, TX 78217	450058	11/19/2007	TX	ASMBS
Aspirus Wausau Hospital 333 Pineridge Boulevard Wausau, WI 54401	52-0030	11/28/2007	WI	ASMBS
Eastern Idaho Regional Medical Center 3100 Channing Way Idaho Falls, ID 83404	13-0018	12/10/2007	ID	ASMBS
Mount Sinai Medical Center 4701 North Meridian Avenue Miami Beach, FL 33140	10-0034	12/11/2007	FL	ASMBS
North Florida Regional Medical Center 6400 Newberry Road, Suite 106 Gainesville, FL 32605	21536	12/27/2007	FL	ASMBS
Baylor Regional Medical Center at Plano 470 Alliance Boulevard Plano, TX 75093	45-0890	01/04/2008	TX	ASMBS
Memorial Medical Center 1800 Coffee Road, Suite 30 Modesto, CA 95350	050557	01/04/2008	CA	ASMBS
Pennsylvania Hospital 800 Spruce Street, 2 Cathcart Philadelphia, PA 19107	39-0226	01/08/2008	PA	ASMBS
Houston Northwest Medical Center 710 FM 1960 Road West Houston, TX 77090	450638	01/08/2008	TX	ASMBS
St. Bernadine Medical Center 2101 North Waterman Avenue San Bernadino, CA 92404	05-0129	01/04/2008	CA	ASMBS
UCLA Medical Center 10833 Le Conte Avenue, CHS 72-236 Los Angeles, CA 90095	050262	01/08/2008	CA	ASMBS
Faulkner Hospital 1153 Centre Street Boston, MA 02130	220119	04/27/2007	MA	ACS
Lourdes Medical Center Burlington County 218-A Sunset Road Willingboro, NJ 08046	310061	01/30/2008	NJ	ASMBS
University of Maryland Medical Center 22 South Greene Street Baltimore, MD 21201-1595	210002	11/05/2007	MD	ACS

Facility Name	Provider Number	Date approved	State	Other Information
UPMC Presbyterian Shadyside 5230 Centre Avenue Pittsburgh, PA 15232	39-0114	08/20/2007	PA	ASMBS
Montefiore Medical Center 111 East 210th Street Bronx NY 10467	See other info	11/07/2007	NY	Group #: 330059 #: 140341 #: 3097H1; ACS
Salt Lake Regional Medical Center 1050 East South Temple Salt Lake City, UT 84102	460003	02/11/2008	UT	ASMBS
Kaiser Permanente-South San Francisco 1200 El Camino Real South San Francisco, CA 94080	050070	01/30/2008	CA	ASMBS
Chilton Memorial Hospital 97 West Parkway Pompton Plains, NJ 07444	310017	02/12/2008	NJ	ASMBS
Mary Imogene Bassett Hospital One Atwell Road Cooperstown, NY 13326	330136	02/12/2008	NY	ASMBS
Sharp Memorial Hospital 7901 Frost Street - 5 South /ACC San Diego, CA 92123	0150100	02/11/2008	CA	ASMBS
Doctors Hospital at White Rock Lake 9440 Poppy Drive Dallas, TX 75218	450678	01/30/2008	TX	ASMBS
Rhode Island Hospital 593 Eddy Street Providence, RI 02903	410007	02/25/2008	RI	ASMBS
Munson Medical Center 1105 Sixth Street Traverse City, MI 49684	23-0097	02/19/2008	MI	ASMBS
USC University Hospital 1500 San Pablo Street Los Angeles, CA 90033	05-0696	01/30/2008	CA	ASMBS
Lexington Medical Center 2720 Sunset Boulevard. West Columbia, SC 29169-4810	See other information	01/14/2008	SC	ACS; NPI: Hospital Services 1356366314; Professional Services 1144248097
Emory University Hospital Midtown 1365 Clifton Road, NE Atlanta, GA 30322	110078	11/13/2007	GA	ACS
Del Sol Medical Center 10201 Gateway West, Suite 130 El Paso, TX 79925	45-0646	05/03/2007	TX	ACS
Saint Clare's Hospital 400 West Blackwell Street Dover, NJ 07801	310050	03/17/2008	NJ	ASMBS
Hartford Hospital 85 Seymour Street, Suite 415 Hartford, CT 06106	07-0025	03/25/2008	CT	ASMBS
Singing River Hospital 2809 Denny Avenue Pascagoula, MS 39581	250040	03/17/2008	MS	ASMBS
St. John's Regional Health Center 1235 East Cherokee Street Springfield, MO 65804	260065	03/17/2008	MO	ASMBS
Willis Knighton Health System 2551 Greenwood Road, Suite 340 Shreveport, LA 71103	190111	03/17/2008	LA	ASMBS
Santa Barbara Cottage Hospital P.O. Box 689 Pueblo at Bath Street Santa Barbara, CA 93102-0689	05-0396	02/25/2008	CA	ASMBS
Syosset Hospital 221 Jericho Turnpike Syosset, NY 11791	330106	02/19/2008	NY	ASMBS
The Hospital of Central Connecticut 100 Grand Street New Britain, CT 06050	070035	03/11/2008	CT	ASMBS
Stringfellow Memorial Hospital 301 East 18th Street Anniston, AL 36207b	01-0038	03/11/2008	AL	ASMBS
Providence Alaska Medical Center 3200 Providence Drive Anchorage, AK 99519-6604	02-0001	03/17/2008	AK	ASMBS
The Reading Hospital and Medical Center 2603 Keiser Boulevard Wyomissing, PA 19610	390044	03/25/2008	PA	ASMBS
Good Samaritan Hospital 255 Lafayette Avenue Suffern, NY 10901	330158	03/25/2008	NY	ASMBS
San Joaquin Community Hospital 2819 H Street Bakersfield, CA 93301	04055	04/01/2008	CA	ASMBS
Lowell General Hospital 295 Varnum Avenue Lowell, MA 01854	1407804669	02/22/2008	MA	Medicare: 220063; Medicaid Inpt #: 100228; Medicaid Outpt #: 1201069; ACS
University of Iowa Hospitals and Clinics 200 Hawkins Drive Iowa City IA 52242	160058	11/19/2007	IA	ASMBS
El Camino Hospital 2500 Grant Road Mountain View, CA 94039	050308	11/19/2007	CA	ASMBS
Memorial Health University Medical Center 4700 Waters Avenue Savannah, GA 31404	11-0036	04/08/2008	GA	ASMBS
Abington Memorial Hospital 1235 Old York Road, Suite G-28 Abington, PA 19001	390231	04/21/2008	PA	ASMBS
Christiana Care Health Services 3506 Kennett Pike Wilmington, DE 19807	080001	04/18/2008	DE	ACS
Gateway Medical Center 1771 Madison Street Clarksville, TN 37043	440035	04/21/2008	TN	ASMBS
Westchester Medical Center 95 Grasslands Road Valhalla, NY 10595	W94181	04/07/2008	NY	ACS
Desert Regional Medical Center 1150 North Indian Canyon Drive Palm Springs, CA 92262	05-0243	05/12/2008	CA	ASMBS
Southwest General Hospital 7400 Barlite Boulevard San Antonio, TX 78224	450697	05/22/2008	TX	ASMBS
Muhlenberg Regional Medical Center Park Avenue and Randolph Road Plainfield, NJ 07061	310063	06/02/2008	NJ	ASMBS
St. Mary's Medical Center 407 East 3rd Street Duluth, MN 55805	240002	06/09/2008	MN	ASMBS
St. Charles Medical Center – Bend 2500 NE Neff Road Bend, OR 97701	380047	06/30/2008	OR	ASMBS
Bay Area Hospital 1775 Thompson Road Coos Bay, OR 97420	380090	06/30/2008	OR	ASMBS
Flagler Hospital 400 Health Park Boulevard St. Augustine, FL 32086	100090	07/31/2008	FL	ASMBS
Saint Elizabeth Regional Medical Center 555 South 70th Street 6th Fl. Surgical Unit, Lincoln, NE 68510	280020	07/21/2008	NE	ASMBS
Holston Valley Medical Center 130 Ravine Street Kingsport, TN 37660	44-0017	07/29/2008	TN	ASMBS
St. John Macomb-Oakland Hospital 27483 Dequindre Road Madison Heights, MI 48701	230195-02	08/07/2008	MI	ASMBS Suite 204
Nebraska Methodist Hospital 8303 Dodge Street Omaha, NE 68114	280040	08/07/2008	NE	ASMBS
Emory Johns Creek Hospital 6325 West Johns Crossing Johns Creek, Georgia 30097	11-0230	02/24/2006	GA	ASMBS
Marquette General Hospital 580 West College Avenue Marquette, MI 49855	23-0054	08/07/2008	MI	ASMBS
Holy Cross Hospital 1500 Forest Glen Road Silver Springs, MD 20910	210004	07/29/2008	MD	ACS
Sacred Heart Hospital 5149 North 9th Avenue, Suite G-32 Pensacola, FL 32504	100025	08/19/2008	FL	ASMBS
Torrance Memorial Medical Center 3330 Lomita Boulevard Torrance, CA 90505	05-0351	08/02/2008	CA	ASMBS
MountainView Hospital 3100 North Tenya Way Las Vegas, NV 89128	290039	09/03/2008	NV	ASMBS
Central Mississippi Medical Center 1850 Chadwick Drive Jackson, MS 39204	250072	08/26/2008	MS	ASMBS
University of Illinois Medical Center at Chicago 1740 W. Taylor Street Chicago, IL 60612-7236	NPI # 1861431751	06/30/2008	IL	ACS
Alegent Health Immanuel Medical Center 6901 N 72 Street Omaha, NE 68122	280081	08/29/2008	NE	ASMBS
Alexian Brothers Medical Center 800 Biesterfield Road, 6th Floor Elk Grove Village, Illinois 60007-3397	14-0258	08/10/2005	IL	ASMBS
Vista Hospital of Dallas 2696 West Walnut Street Garland, TX 75042	450315	08/26/2008	TX	ASMBS
Southwest Washington Medical Center 400 NE Mother Joseph Place Vancouver, WA 98664	500050	09/08/2008	WA	ASMBS

Facility Name	Provider Number	Date approved	State	Other Information
McLaren Regional Medical Center 401 South Ballenger Highway Flint, MI 48532	230141	09/24/2008	MI	ASMBS
St. Mary Mercy Hospital 14555 Levan Road, Suite 311 Livonia, MI 48154	12200126	09/25/2008	MI	ASMBS
Altru Health System 1000 South Columbia Road Grand Forks, ND 58206	350019	09/25/2008	ND	ASMBS
IOM Health System LP (dba Lutheran Hospital of Indiana Bariatric Center) 7950 West Jefferson Boulevard Ft. Wayne, IN 46804- 4140	150017 NPI#1306897335	09/25/2008	IN	ASMBS
Cheyenne Regional Medical Center 2301 House Avenue, Suite 500 Cheyenne, WY 82001	530014	09/24/2008	WY	ASMBS
Henry Ford Macomb Hospital Corporation dba Henry Ford Macomb Hospital – Warren 13355 East 10 Mile Road Warren, MI 48089	230047	10/07/2008	MI	ASMBS
Seton Medical Center 1201 West 38th Street Austin, TX 78705	450056	09/25/2008	TX	ASMBS
JFK Medical Center 5301 South Congress Avenue Atlantis, FL 33462	100080	09/18/2008	FL	ASMBS
Saint Alphonsus Regional Medical Center 1055 North Curtis Road Boise, ID 83706	130007	10/07/2008	ID	ASMBS
High Point Regional Health System 601 N. Elm Street High Point, NC 27261	34-0004	05/02/2008	NC	ACS
St. Joseph Health Center 667 Eastland Avenue SE Warren, Ohio 44483	36-0161	09/25/2008	OH	ASMBS
North Carolina Baptist Hospital Medical Center Boulevard Winston Salem, NC 27157	340047	07/29/2008	NC	ASMBS
St. Catherine of Siena Medical Center 48 Route 25A Smithtown, NY 11787	316495	08/28/2006	NY	ASMBS
Winthrop University Hospital 259 1St Street Mineola, NY 11501	33016	11/10/2008	NY	ASMBS
St. Alexius Medical Center 1555 Barrington Road Hoffman Estates, IL 60169	14-0290	08/26/2008	IL	ASMBS
Riverside Methodist Hospital 3535 Olentangy River Road Columbus, OH 43214	36-0006	10/21/2008	OH	ASMBS
Saint Francis Hospital 6161 South Yale Avenue Tulsa, OK 74136	370091	10/23/2006	OK	ACS
Lawrence Hospital Center 55 Palmer Avenue Bronxville, NY 10708	330061	11/05/2008	NY	ACS
St. John's Regional Medical Center 1700 North Rose Avenue, #380 Oxnard, CA 93030	050082	12/02/2008	CA	ASMBS
Floyd Medical Center PO Box 233 Rome, GA 30162	110054	01/07/2009	GA	ASMBS
Hazleton General Hospital 700 East Broad Street Hazleton, PA 18201	390185	04/20/2009	PA	ASMBS
Memorial Hermann Texas Medical Center 6411 Fannin Street Houston, TX 77030	45-0068	01/29/2009	TX	ACS
Mercy Medical Center- West Lakes 1601 60th Street West Des Moines, Iowa 50266	160083	01/28/2009	IA	ASMBS
Northwest Hospital LLC dba Northwest Medical Center 6200 North La Cholla Boulevard Tucson, AZ 85741	03-0085	04/06/2009	AZ	ASMBS
Plaza Medical Center of Fort Worth 900 8th Avenue, PAT-Bariatrics Ft. Worth, TX 76104	450672	03/20/2009	TX	ASMBS
SUNY Upstate Medical University 750 E. Adams Street, University Hospital Syracuse, NY 13210	NPI #: 1578554630	03/27/2009	NY	ACS; General Acute Care Hospital Number: 330241
Winchester Medical Center Bariatric Program 1840 Amherst Street Winchester, VA 22601	490005	03/20/2009	VA	ASMBS
Vanderbilt University Medical Center 1215 21st Avenue South Nashville, TN 37232	1396882205	05/05/2009	TN	ACS
Mother Frances Regional Medical Center 910 East Houston, Suite 550 Tyler, TX 75702	450102	05/07/2009	TX	ASMBS
Sparrow Health System 2900 Hannah Boulevard, Suite B-107 East Lansing, MI 48823	230230	05/15/2009	MI	ASMBS
First Street Hospital 4801 Bissonnet Street Bellaire, TX 77401	67009	05/18/2009	TX	ASMBS
Good Samaritan Hospital Medical Center 1000 Montauk Highway West Islip, NY 11795	330286	05/18/2009	NY	ASMBS
St. Joseph Hospital 1100 West Stewart Drive Orange, CA 92868	050069	05/18/2009	CA	ASMBS
Borgess Medical Center 1521 Gull Road Kalamazoo, MI 49048	23-0117	05/28/2009	MI	ASMBS
UT Southwestern Medical Center 5909 Harry Hines Boulevard Dallas, TX 75235	45-0044	05/28/2009	TX	ACS
Brookdale University Hospital / Medical Center 1 Brookdale Plaza New York, NY 11212	33-0233	06/05/2009	NY	ASMBS
Des Peres Hospital 2345 Dougherty Ferry Road St. Louis, MO 63122	26-0176	06/05/2009	MO	ASMBS
Surgical Weight Loss Program at Eastern Maine Medical Center 905 Union Street, Suite 11 Bangor, ME 04401	1790789147	06/10/2009	ME	ACS
Baylor Medical Center at Frisco 5601 Warren Parkway Frisco, TX 75034	450853	06/22/2009	TX	ASMBS
Trinity Hospital of Augusta 2260 Wrightsboro Road Augusta, Georgia 30904	110039	06/29/2009	GA	ASMBS
The Nebraska Medical Center 988142 Nebraska Medical Center Omaha, NE 68198-8142	28-0013	06/29/2009	NE	ASMBS
Day Surgery at Renaissance DBA Doctors Hospital at Renaissance 5501 S. McColl Road Edinburg, TX 78539	450869	07/13/2009	TX	ASMBS
Gunderson Lutheran Medical 1900 South Avenue LaCrosse, WI 54601	1851343115	04/28/2009	WI	ACS
Princeton Baptist Medical Center 917 Tuscaloosa Avenue, SW Birmingham, AL 35211	1144312430	07/01/2009	AL	ACS
Centegra Health System Memorial Medical Center 3701 Doty Road Woodstock, IL 60098	140176	08/14/2009	IL	ASMBS
Wesley Long Community Hospital 501 North Elam Avenue Greensboro, NC 27403-1199	1477591055	06/29/2009	NC	ACS
South Miami Hospital 3 East Tower Building, 6200 SW 73 Street South Miami, FL 33143	1982688230	06/22/2009	FL	ASMBS; ACS – 04/20/2010
Castle Medical Center 640 Ulukahiki Street Kailua, HI 96734	120006	09/08/2009	HI	ASMBS
Advocate Good Samaritan Hospital 3815 Highland Avenue Downers Grove, IL 60515	140288	09/08/2009	IL	ASMBS
Sacred Heart Medical Center 3377 RiverBend Drive Springfield, OR 97477	380102	01/23/2008	OR	ASMBS
Holzer Weight Loss Solutions 100 Jackson Pike Gallipolis, OH 45631	3600542	09/30/2009	OH	ASMBS
Christus Schumpert Health System One St. Mary Place Shreveport, Louisiana 71101	190041	12/02/2005	LA	ASMBS
AnMed Health Medical Center 800 North Fant Street Anderson, SC 29621	420027	09/30/2009	SC	ASMBS
Sinai Hospital of Baltimore 2435 W. Belvedere Avenue Baltimore, MD 21215	#1285672204	09/25/2009	MD	ACS
Maine Medical Center 10 Andover Road Portland, ME 04102-1954	#6320255	09/28/2009	ME	ACS
Palmyra Medical Center 2000 Palmyra Road Albany, GA 31702-1908	110163	11/09/2009	GA	ASMBS
Fresno Heart and Surgical Hospital 15 East Audobon Drive Fresno, CA 93720	050732	09/30/2009	CA	ASMBS
Englewood Hospital and Medical Center 350 Engle Street Englewood, NJ 07631	310045	11/09/2009	NJ	ASMBS
Central Baptist Hospital 1740 Nicholasville Road Lexington, KY 40503	180103	11/17/2009	KY	ASMBS
Providence Health Center 405 Londonderry, Suite 312 Waco, TX 76712	450042	11/17/2009	TX	ASMBS

Facility Name	Provider Number	Date approved	State	Other Information
Foundation Surgical Hospital 9522 Huebner Road San Antonio, TX 78420	670054	11/25/2009	TX	ASMBS
Middle Tennessee Medical Center 400 North Highland Avenue Murfreesboro, TN 37129	44-0053	11/17/2009	TN	ASMBS
Iowa Methodist Medical Center 1200 Pleasant Street Des Moines, IA 50309	160082	12/16/2009	IA	ASMBS
Parkway Medical Center 1854 Beltline Road SW Decatur, AL 35601	01-0054	12/18/2009	AL	ASMBS
Texas Health Presbyterian Hospital Denton 3000 I-35 North Denton, TX 76201	45-0743	12/16/2009	TX	ASMBS
Catholic Medical Center 100 McGregor Street Manchester, NH 03102	30-0034	12/15/2009	NY	ASMBS
Wood County Hospital 950 West Wooster Street Bowling Green, OH 43402	36-0029	12/18/2009	OH	ASMBS
West Jefferson Medical Center 1101 Medical Center Boulevard Marrero, LA 70072	190039	12/29/2009	LA	ASMBS
Exempla Saint Joseph Hospital 1835 Franklin Street Denver, CO 80218	06-0028	12/15/2009	CO	ASMBS
Wise Regional Health System 800 Medical Center Drive Decatur, TX 76234	450271	01/08/2010	TX	ASMBS
Overlake Hospital Medical Center 1035 116th Avenue NE Bellevue, WA 98004	500051	01/08/2010	WA	ASMBS
Henry Ford Wyandotte Hospital 2333 Biddle Avenue Wyandotte, MI 48192	23-0146	01/15/2010	MI	ASMBS
Harlem Hospital Center 506 Lenox Avenue New York, NY 10037	330240	12/29/2009	NY	ASMBS
Flagstaff Medical Center 1200 North Beaver Street Flagstaff, AZ 86001	030023	11/17/2009	AZ	ASMBS
Forest Health Medical Center 135 South Prospect Ypsilanti, MI 48198	230144	12/28/2009	MI	ASMBS
St. Luke's Hospital and Health Network 1736 Hamilton Street Allentown, PA 18104	39-0049	01/25/2010	PA	ASMBS
Lutheran Medical Center 150 55th Street Brooklyn, NY 11220b	330306	08/22/2005	NY	ASMBS
Saint Luke's Hospital of Kansas City 4401 Wornall Road Kansas City, MO	W19F145	01/02/2010	MO	ASMBS
North Shore Medical Center - Salem Hospital 81 Highland Avenue Salem, MA 01970	220035	12/11/2009	MA	ACS
Bellevue Hospital 550 First Avenue NBV 15 South 7 New York, NY 10016	1073535027	02/12/2010	NY	ASMBS
CentraState Medical Center 901 West Main Street Freehold, NJ 07728	31-0111	02/12/2010	NJ	ASMBS
Robert Wood Johnson University Hospital Hamilton 1 Hamilton Health Place Hamilton, NJ 08690	310110	02/12/2010	NJ	ASMBS
Carteret General Hospital 3500 Arendell Street Morehead City, NC 28557	34-0142	03/12/2010	NC	ASMBS
Saint Joseph's Hospital 1000 North Oak Avenue Marshfield, WI 54449-5777	520037	02/19/2010	WI	ASMBS
Blount Memorial Hospital 907 East Lamar Alexander Parkway Maryville, TN 37801	440011	07/06/2006	TN	ASMBS
South Texas Health System dba McAllen Heart Hospital 1102 West Trenton Road Edinburg, TX 78539-9105	45-0119	04/09/2010	TX	ASMBS
Methodist Texsan Hospital, a Methodist Hospital Facility 6700 IH 10 West San Antonio, TX 78201-2009	45-0388	04/09/2010	TX	ASMBS
Methodist Hospital of Sacramento 7500 Hospital Drive Sacramento, CA 95823	050590	04/09/2010	CA	ASMBS
Mennonite General Hospital of Cayey dba Hospital Menonita Cayey PO Box 373130 Cayey, PR 00737-3130	400013	03/29/2010	PR	ASMBS
Portsmouth Regional Hospital 333 Borthwick Avenue Portsmouth, NH 03801	30-0029; 1518913607	04/09/2010	NH	ASMBS; ACS
Harford Memorial Hospital 421 South Union Ave, Suite 201 Havre de Grace, MD 21078	1770589533	12/22/2009	MD	ACS
Windber Medical Center 600 Somerset Avenue Windber, PA 15963	390112	04/30/2010	PA	ASMBS
P & S Surgical Hospital / St. Frances 312 Grammont Street Monroe, LA 71201	190246 /190125	04/26/2010	LA	ASMBS
Marshall Medical Center North 11491 US Hwy 431 Albertville, AL 35950	01-0010	04/19/2010	AL	ASMBS
Memorial Medical Center 701 North First Street Springfield, IL 62794	14-0148	04/30/2010	IL	ASMBS
Community Hospital North 7250 Clearvista Drive Indianapolis, IN 46256	150169	04/26/2010	IN	ASMBS
Bayshore Medical Center 4000 Spencer Highway Pasadena, TX 77504	450097	04/09/2010	TX	ASMBS
Columbus Regional Hospital 2325 18th Street Columbus, IN 47201	150112	05/10/2010	IN	ASMBS
Nash Health Care 2460 Curtis Ellis Drive Rocky Mount, NC 27804	34-0147	05/24/2010	NC	ASMBS
Mercy Health Partners- Fairfield 3050 Mack Road Fairfield, OH 45014	360056	05/24/2010	OH	ASMBS
Rex Healthcare 4420 Lake Boone Trail Raleigh, NC 27607	340114	05/17/2010	NC	ASMBS
Our Lady of Lourdes Regional Medical Center 611 St. Landry Street Lafayette, LA 70506	190102	05/24/2010	LA	ASMBS
Carolinas Medical Center Mercy 2608 E 7th Street Charlotte, NC 28204	NPI #1497792550	04/01/2010	NC	ACS
Halifax Health Medical Center 303 N Clyde Morris Boulevard Daytona Beach, FL 32114	100017	05/24/2010	FL	ASMBS
Mercy Medical Center North Iowa 1000 4th Street SW Mason City, IA 50401	160064	06/07/2010	IA	ASMBS
St. Elizabeth Weight Management Center 4900 Houston Road Florence, KY 41042	195001	10/11/2006 – listing effective as of 06/18/2010	KY	ASMBS
Salem Hospital 875 Oak Street SE Salem, OR 97309	380051	6/28/2010	OR	ASMBS
Banner Gateway Medical Center 2940 E. Banner Gateway Drive Gilbert, AZ 85234	03-0122	05/17/2010	AZ	ASMBS
North Cypress Medical Center 21214 Northwest Freeway Houston, TX 77429	670024	6/28/2010	TX	ASMBS
Baptist Hospital East 3900 Kresge Way Louisville, KY 40207	18-0130	06/28/2010	KY	ASMBS
Saint Mary's Health Care 200 Jefferson Avenue SE Grand Rapids, MI 49503-4502	23-0059	06/28/2010	MI	ASMBS
MetroWest Medical Center, Leonard Morse Hospital 67 Union Street, Fair 4 Natick, Massachusetts 01760	22-0175	07/14/2010	MA	ASMBS
Central Maine Medical Center 300 Main Street Lewiston, Maine 04240	010211494	07/14/2010	ME	ASMBS
Physicians' Specialty Hospital 3873 North Parkview Drive Fayetteville, Arkansas 72703	1285622845	08/16/2010	AR	ASMBS
Shands at the University of Florida 1600 SW Archer Road, #6175 Gainesville, Florida 32610	100113	07/26/2010	FL	ASMBS
The George Washington University Hospital 900 23rd Street NW Washington, District of Columbia 20037	090001	07/27/2010	DC	ASMBS
Community Hospital Monterery Peninsula 23625 Holman Highway Monterey, CA 93940	05-0145 1932197258	08/31/2010	CA	ASMBS
Flowers Hospital 4370 West Main Street, Suite 41 Dothan, AL 36305	010055	08/27/2010	AL	ASMBS

Facility Name	Provider Number	Date approved	State	Other Information
Jeanes Hospital 7600 Central Avenue Philadelphia, PA 19111	390080	08/02/2010	PA	ASMBS
Scripps Green Hospital 12395 El Camino Real, Suite 317 San Diego, CA 92130	18412 33780	08/19/2010	CA	ACS
Emerson Hospital 54 Baker Avenue Extension Concord, MA 01742	#1922103357	07/30/2010	MA	ACS
University of North Carolina 4035 Burnett-Womack Bldg. Campus Box 7081 Chapel Hill, NC 27599	1932208576	08/23/2010	NC	ACS
Brandon Regional Hospital 119 Oakfield Drive Brandon, FL 33511	10-0243	08/16/2010	FL	ASMBS
St. Elizabeth Hospital 1125 West Hwy 30 Gonzales, Louisiana 70737	190242	08/27/2010	LA	ASMBS
Washington County Hospital 251 East Antietam Street Hagerstown, MD 21740	21-0001	09/17/2010	MD	ASMBS
Our Lady of the Lake Regional Medical Center 5000 Hennessy Boulevard. Baton Rouge, LA 70808	190064	09/17/2010	LA	ASMBS
Bridges Center at Tempe St. Luke's 1500 South Mill Avenue Tempe, AZ 85281	030037	09/17/2010	AZ	ASMBS
JourneyLite of Cincinnati 10475 Reading Road Cincinnati, OH 45241	36C0001245	11/22/2010	OH	ASMBS
Beebe Medical Center 424 Savannah Road Lewes, DE 19958-0226	08-0007	11/22/2010	DE	ASMBS
Las Palmas Bariatric Center 3333 N. Mesa El Paso, TX 79902	450107	12/06/2010	TX	ASMBS
Southern Ocean Medical Center 1100 Route 72W Suite 303 Manahawkin, NJ 08050	310113	12/06/2010	NJ	ASMBS
Schneck Medical Center 411 West Tipton Street Seymour, IN 47274	150065	11/22/2010	IN	ASMBS
Swedish Medical Center 801 Broadway Suite 800 Seattle, WA 98122	500027	12/16/2010	WA	ASMBS
Pinnacle Health Hospitals 118 Washington Street Harrisburg, PA 17104	390067	03/29/2007	PA	ASMBS
Mary Hitchcock Memorial Hospital Dartmouth Hitchcock Clinic - 4C One Medical Center Drive Lebanon, NH 03756-0001	1023092053	01/31/2011	NH	ACS
University Pointe Surgical Hospital 7750 University Court West Chester, OH 45069	360271	01/31/2011	OH	ASMBS
INTEGRIS Baptist Medical Center 3433 N.W. 56 Street Building B, Suite 970 Oklahoma City, OK 73112	1831103654	02/07/2011	OK	ACS
Presbyterian Hospital Matthews 1500 Matthews Township Parkway Matthews, NC 28105	340171	03/25/2011	NC	ASMBS
Orange Regional Medical Center 4 Harriman Drive Goshen, New York 10924	33-0126	03/25/2011	NY	ASMBS
St. Joseph's Hospital Health Center 301 Prospect Avenue Syracuse, New York 13203	330140	03/25/2011	NY	ASMBS
Northside Hospital 1000 Johnson Ferry Road, NE Atlanta, GA 30342	1457396079	07/01/2010	GA	ACS
Pasco Regional Medical Center 13100 Fort King Road Dade City. FL 33525	1356336069	03/04/2011	FL	ACS
Mercy Fitzgerald Hospital 1501 Lansdowne Avenue, Suite 307 Darby, PA 19023	MCMC39-0156	01/07/2011	PA	ASMBS
St. Luke's Hospital 4201 Belfort Road Jacksonville, Florida 32216	100151	04/14/2011	FL	ASMBS
Wheaton Fransiscan Healthcare-Elmbrook Memorial 19333 W. North Avenue Brookfield, Wisconsin 53045	52-0170	08/10/2005	WI	ASMBS
Intermountain LDS Hospital 8th Avenue & C Street Salt Lake City, UT 84143	46-0006	04/14/2011	UT	ASMBS
St. Elizabeth's Medical Center a Caritas Family Hospital 736 Cambridge Street Brighton, MA 02135	1174513204	03/29/2011	MA	ACS
The Miriam Hospital 164 Summit Avenue Providence, RI 02906	TM17086	01/07/2011	RI	ASMBS
Northwest Weight Loss Surgery 125 130th Street SE Everett, WA 98208	50-C0001269	11/22/2010	WA	ASMBS
Laredo Texas Hospital Company, L.P., d/b/a Laredo Medical Center 1700 East Saunders Street Laredo, TX 78041	450029	01/04/2011	TX	ASMBS
Norwood Hospital 3 Edgewater Drive Suite 102, Norwood MA 02062	1952613416	06/27/2010	MA	ACS

BILLING CODE 4120–01–C

Addendum XV FDG–PET for Dementia and Neurodegenerative Diseases Clinical Trials (January Through March 2011)

Addendum XV includes a listing of Medicare-approved clinical trials for fluorodeoxyglucose positron emission tomography (FDG–PET) for dementia and neurodegenerative diseases.

In a National Coverage Determination for fluorodeoxyglucose positron emission tomography (FDG–PET) for dementia and neurodegenerative diseases (220.6.13), we indicated that an FDG–PET scan is considered reasonable and necessary in patients with mild cognitive impairment or early dementia only in the context of an approved clinical trial that contains patient safeguards and protections to ensure proper administration, use, and evaluation of the FDG–PET scan.

Facility name	Provider Number	Date approved	State	Name of Trial	Principal Investigator	Other information
UCLA Medical Center 10833 Le Conte Avenue Los Angeles, CA 90095	HW13029	06/07/2006	CA	Early and Long-term Value of Imaging Brain Metabolism	Dr. Daniel Silverman	
Santa Monica-UCLA Medical Center 1245 16th Street, Suite 105 Santa Monica, CA 90404	W11817A	01/12/2007	CA	N/A	N/A	
University of Buffalo 3435 Main St. Buffalo, NY 14214	14414A	03/12/2007	NY	Metabolic Cerebral Imaging in Incipient Dementia (MCI-ID)	Dr. Daniel Silverman	
Center for Alzheimer's Care, Imaging and Research (University of Utah) 650 Komas Dr., Suite 106-A Salt Lake City, UT 84108	460009	02/17/2009	UT	Metabolic Cerebral Imaging in Incipient Dementia (MCI-ID)	Norman Foster, M.D	Two locations for U of Utah
Medical University of South Carolina 169 Ashley Avenue PO Box 250322 Charleston, SC 29425	1073605879	02/17/2009	SC		Kenneth Spicer	
Cedars-Sinai Medical Center 8700 Beverly Boulevard. Nuc Suite 1239 Los Angeles, CA 90048	95 1644600	10/09/2009	CA	"Early and Long-term Value of Imaging Brain Metabolism"	Dr. Alan Waxman	

For the purposes of this quarterly notice, we list all Medicare-approved clinical trials as of the ending date of the period covered by this notice. Based on our proposal for future quarterly notices, we would discontinue publishing this addendum unless there were additional Medicare-approved clinical trials for fluorodeoxyglucose positron emission tomography (FDG–PET) for dementia and neurodegenerative diseases. We would continue to provide the hyperlink to the Web site to access this information and a contact person for questions or additional information.

This information is available on our Web site at *http://www.cms.gov/MedicareApprovedFacilitie/PETDT/list.asp#TopOfPage*.

For questions or additional information, contact Stuart Caplan, RN, MAS (410–786–8564).

[FR Doc. 2011–19954 Filed 8–5–11; 8:45 am]

BILLING CODE 4120–01–P

FEDERAL REGISTER

Vol. 76 Monday,

No. 152 August 8, 2011

Part V

Department of the Interior

Fish and Wildlife Service

50 CFR Part 20

Migratory Bird Hunting; Proposed Migratory Bird Hunting Regulations on Certain Federal Indian Reservations and Ceded Lands for the 2011–12 Season; Proposed Rule

DEPARTMENT OF THE INTERIOR

Fish and Wildlife Service

50 CFR Part 20

[Docket No. FWS–R9–MB–2011–0014; 91200–1231–9BPP–L2]

RIN 1018–AX34

Migratory Bird Hunting; Proposed Migratory Bird Hunting Regulations on Certain Federal Indian Reservations and Ceded Lands for the 2011–12 Season

AGENCY: Fish and Wildlife Service, Interior.

ACTION: Proposed rule.

SUMMARY: The U.S. Fish and Wildlife Service (hereinafter, Service or we) proposes special migratory bird hunting regulations for certain Tribes on Federal Indian reservations, off-reservation trust lands, and ceded lands for the 2011–12 migratory bird hunting season. This proposed rule responds to Tribal requests for Service recognition of Tribal authority to regulate hunting under established guidelines. This proposed rule would allow the establishment of season bag limits and, thus, harvest, at levels compatible with populations and habitat conditions.

DATES: We will accept all comments on the proposed regulations that are postmarked or received in our office by August 18, 2011.

ADDRESSES: You may submit comments on the proposals by one of the following methods:

- *Federal eRulemaking Portal: http://www.regulations.gov.* Follow the instructions for submitting comments on Docket No. FWS–R9–MB–2011–0014.
- *U.S. mail or hand-delivery:* Public Comments Processing, Attn: FWS–R9–MB–2011–0014; Division of Policy and Directives Management; U.S. Fish and Wildlife Service; 4401 N. Fairfax Drive, MS 2042–PDM; Arlington, VA 22203.

We will not accept e-mailed or faxed comments. We will post all comments on *http://www.regulations.gov*. This generally means that we will post any personal information you provide us (see the Public Comments section below for more information).

FOR FURTHER INFORMATION CONTACT: Ron W. Kokel, at: Division of Migratory Bird Management, U.S. Fish and Wildlife Service, Department of the Interior, MS MBSP–4107–ARLSQ, 1849 C Street, NW., Washington, DC 20240; (703) 358–1714.

SUPPLEMENTARY INFORMATION: In the April 8, 2011, **Federal Register** (76 FR 19376), we requested proposals from Indian Tribes wishing to establish special migratory bird hunting regulations for the 2011–12 hunting season, under the guidelines described in the June 4, 1985, **Federal Register** (50 FR 23467). In this supplemental proposed rule, we propose special migratory bird hunting regulations for 30 Indian Tribes, based on the input we received in response to the April 8, 2011, proposed rule, and our previous rules. As described in that proposed rule, the promulgation of annual migratory bird hunting regulations involves a series of rulemaking actions each year. This proposed rule is part of that series.

We developed the guidelines for establishing special migratory bird hunting regulations for Indian Tribes in response to tribal requests for recognition of their reserved hunting rights and, for some Tribes, recognition of their authority to regulate hunting by both tribal and nontribal hunters on their reservations. The guidelines include possibilities for:

(1) On-reservation hunting by both tribal and nontribal hunters, with hunting by nontribal hunters on some reservations to take place within Federal frameworks but on dates different from those selected by the surrounding State(s);

(2) On-reservation hunting by tribal members only, outside of the usual Federal frameworks for season dates and length, and for daily bag and possession limits; and

(3) Off-reservation hunting by tribal members on ceded lands, outside of usual framework dates and season length, with some added flexibility in daily bag and possession limits.

In all cases, the regulations established under the guidelines must be consistent with the March 10 to September 1 closed season mandated by the 1916 Convention between the United States and Great Britain (for Canada) for the Protection of Migratory Birds (Treaty). The guidelines apply to those Tribes having recognized reserved hunting rights on Federal Indian reservations (including off-reservation trust lands) and on ceded lands. They also apply to establishing migratory bird hunting regulations for nontribal hunters on all lands within the exterior boundaries of reservations where Tribes have full wildlife management authority over such hunting or where the Tribes and affected States otherwise have reached agreement over hunting by nontribal hunters on lands owned by non-Indians within the reservation.

Tribes usually have the authority to regulate migratory bird hunting by nonmembers on Indian-owned reservation lands, subject to Service approval. The question of jurisdiction is more complex on reservations that include lands owned by non-Indians, especially when the surrounding States have established or intend to establish regulations governing hunting by non-Indians on these lands. In such cases, we encourage the Tribes and States to reach agreement on regulations that would apply throughout the reservations. When appropriate, we will consult with a Tribe and State with the aim of facilitating an accord. We also will consult jointly with tribal and State officials in the affected States where Tribes wish to establish special hunting regulations for tribal members on ceded lands. Because of past questions regarding interpretation of what events trigger the consultation process, as well as who initiates it, we provide the following clarification. We routinely provide copies of **Federal Register** publications pertaining to migratory bird management to all State Directors, Tribes, and other interested parties. It is the responsibility of the States, Tribes, and others to notify us of any concern regarding any feature(s) of any regulations. When we receive such notification, we will initiate consultation.

Our guidelines provide for the continued harvest of waterfowl and other migratory game birds by tribal members on reservations where such harvest has been a customary practice. We do not oppose this harvest, provided it does not take place during the closed season defined by the Treaty, and does not adversely affect the status of the migratory bird resource. Before developing the guidelines, we reviewed available information on the current status of migratory bird populations, reviewed the current status of migratory bird hunting on Federal Indian reservations, and evaluated the potential impact of such guidelines on migratory birds. We concluded that the impact of migratory bird harvest by tribal members hunting on their reservations is minimal.

One area of interest in Indian migratory bird hunting regulations relates to hunting seasons for nontribal hunters on dates that are within Federal frameworks, but which are different from those established by the State(s) where the reservation is located. A large influx of nontribal hunters onto a reservation at a time when the season is closed in the surrounding State(s) could result in adverse population impacts on one or more migratory bird species. The guidelines make this unlikely, however, because tribal proposals must include:

(a) Harvest anticipated under the requested regulations;

(b) Methods that will be employed to measure or monitor harvest (such as bag checks, mail questionnaires, etc.);

(c) Steps that will be taken to limit level of harvest, where it could be shown that failure to limit such harvest would adversely impact the migratory bird resource; and

(d) Tribal capabilities to establish and enforce migratory bird hunting regulations.

We may modify regulations or establish experimental special hunts, after evaluation and confirmation of harvest information obtained by the Tribes.

We believe the guidelines provide appropriate opportunity to accommodate the reserved hunting rights and management authority of Indian Tribes while ensuring that the migratory bird resource receives necessary protection. The conservation of this important international resource is paramount. The guidelines should not be viewed as inflexible. In this regard, we note that they have been employed successfully since 1985. We believe they have been tested adequately and, therefore, we made them final beginning with the 1988–89 hunting season. We should stress here, however, that use of the guidelines is not mandatory and no action is required if a Tribe wishes to observe the hunting regulations established by the State(s) in which the reservation is located.

Service Migratory Bird Regulations Committee Meetings

Participants at the June 22–23, 2011, meetings reviewed information on the current status of migratory shore and upland game birds and developed 2011–12 migratory game bird regulations recommendations for these species plus regulations for migratory game birds in Alaska, Puerto Rico, and the U.S. Virgin Islands; special September waterfowl seasons in designated States; special sea duck seasons in the Atlantic Flyway; and extended falconry seasons. In addition, we reviewed and discussed preliminary information on the status of waterfowl.

Participants at the previously announced July 27–28, 2011, meetings will review information on the current status of waterfowl and develop recommendations for the 2011–12 regulations pertaining to regular waterfowl seasons and other species and seasons not previously discussed at the early-season meetings. In accordance with Department of the Interior policy, these meetings are open to public observation and you may submit comments on the matters discussed.

Population Status and Harvest

The following paragraphs provide preliminary information on the status of waterfowl and information on the status and harvest of migratory shore and upland game birds excerpted from various reports. For more detailed information on methodologies and results, you may obtain complete copies of the various reports at the address indicated under **FOR FURTHER INFORMATION CONTACT** or from our Web site at *http://www.fws.gov/migratorybirds/NewsPublicationsReports.html.*

Waterfowl Breeding and Habitat Survey

Federal, provincial, and State agencies conduct surveys each spring to estimate the size of breeding populations and to evaluate the conditions of the habitats. These surveys are conducted using fixed-wing aircraft, helicopters, and ground crews and encompass principal breeding areas of North America, covering an area over 2.0 million square miles. The traditional survey area comprises Alaska, Canada, and the north-central United States, and includes approximately 1.3 million square miles. The eastern survey area includes parts of Ontario, Quebec, Labrador, Newfoundland, Nova Scotia, Prince Edward Island, New Brunswick, New York, and Maine, an area of approximately 0.7 million square miles.

Overall, habitat conditions during the 2011 Waterfowl Breeding Population and Habitat Survey were characterized by average to above-average moisture and a normal winter and spring across the entire traditional and eastern survey areas. The exception was a portion of the west-central traditional survey area that had received below-average moisture. The total pond estimate (Prairie Canada and United States combined) was 8.1 ± 0.2 million. This was 22 percent above the 2010 estimate of 6.7 ± 0.2 million ponds, and 62 percent above the long-term average of 5.0 ± 0.03 million ponds.

Traditional Survey Area (U.S. and Canadian Prairies and Parklands)

Conditions across the Canadian Prairies were greatly improved relative to last year. Building on excellent conditions from 2010 in portions of southern Alberta, Saskatchewan, and Manitoba, the area of excellent conditions in the prairies expanded in 2011, including a region along the Alberta and Saskatchewan border that had been poor for the last 2 years. The 2011 estimate of ponds in Prairie Canada was 4.9 ± 0.2 million. This was 31 percent above last year's estimate (3.7 ± 0.2 million) and 43 percent above the 1955–2010 average (3.4 ± 0.03 million). As expected, residual water from summer 2010 precipitation remained in the Parklands and the majority of the area was classified as good. Fair to poor conditions, however, were observed in the Parklands of Alberta.

Wetland numbers and conditions were excellent in the U.S. prairies. The 2011 pond estimate for the north-central United States was 3.2 ± 0.1 million, which was similar to last year's estimate (2.9 ± 0.1 million) and 102 percent above the 1974–2010 average (1.6 ± 0.02 million). The eastern U.S. prairies benefitted from abundant moisture in 2010, and the entire U.S. prairies experienced above-average winter and spring precipitation in 2010 and 2011, resulting in good to excellent conditions across nearly the entire region. The western Dakotas and eastern Montana, which were extremely dry in 2010, improved from fair to poor in 2010 to good to excellent in 2011. Further, the abundant moisture and delayed farming operations in the north-central U.S. and southern Canadian prairies likely benefitted early-nesting waterfowl species.

Bush (Alaska, Northern Manitoba, Northern Saskatchewan, Northwest Territories, Yukon Territory, Western Ontario)

In the bush regions of the traditional survey area (Northwest Territories, northern Manitoba, northern Saskatchewan, and western Ontario), spring breakup was late in 2011. However, a period of warm, fair weather just prior to the survey, greatly accelerated ice-out. Habitats improved from 2010 across most of northern Saskatchewan and Manitoba as a result of average to above-average summer and fall precipitation in 2010. Habitat conditions in the Northwest Territories and Alaska were classified as good in 2011. Dry conditions in the boreal forest of Alberta in 2010 persisted into 2011 as habitat conditions were again rated as fair to poor. The dry conditions in this region contributed to numerous forest fires during the 2011 survey.

Eastern Survey Area

In the eastern survey area, winter temperatures were above average and precipitation was below average over most of the region, with the exception of the Maritimes and Maine, which had colder than normal temperatures and above-average precipitation. Despite regional differences in winter

conditions, above-average spring precipitation recharged deficient wetlands, subsequently providing good to excellent production habitat across the region. The boreal forest and Canadian Maritimes of the eastern survey area continued to have good to excellent habitat conditions in 2011. Habitat conditions in Ontario and southern Quebec improved from poor to fair in 2010 to good to excellent in 2011. Northern sections of the eastern survey area continued to remain in good to excellent conditions in 2011.

Status of Teal

The estimate of blue-winged teal from the traditional survey area is 8.9 million. This record-high count represents a 41.0 percent increase from 2010, and is 91 percent above the 1955–2010 average.

Sandhill Cranes

Compared to increases recorded in the 1970s, annual indices to abundance of the Mid-Continent Population (MCP) of sandhill cranes have been relatively stable since the early 1980s. The spring 2011 index for sandhill cranes in the Central Platte River Valley, Nebraska, uncorrected for visibility bias, was 363,356 birds. The photo-corrected, 3-year average for 2008–10 was 600,892, which is above the established population-objective range of 349,000–472,000 cranes.

All Central Flyway States, except Nebraska, allowed crane hunting in portions of their States during 2010–11. An estimated 8,738 hunters participated in these seasons, which was 10 percent higher than the number that participated in the previous season. Hunters harvested 18,727 MCP cranes in the U.S. portion of the Central Flyway during the 2010–11 seasons, which was 23 percent higher than the estimated harvest for the previous year and 29 percent higher than the long-term average. The retrieved harvest of MCP cranes in hunt areas outside of the Central Flyway (Arizona, Pacific Flyway portion of New Mexico, Minnesota, Alaska, Canada, and Mexico combined) was 15,025 during 2010–11. The preliminary estimate for the North American MCP sport harvest, including crippling losses, was 38,561 birds, which was a 51 percent increase from the previous year's estimate. The long-term (1982–2008) trends for the MCP indicate that harvest has been increasing at a higher rate than population growth.

The fall 2010 pre-migration survey for the Rocky Mountain Population (RMP) resulted in a count of 21,064 cranes. The 3-year average was 20,847 sandhill cranes, which is within the established population objective of 17,000–21,000 for the RMP. Hunting seasons during 2010–11 in portions of Arizona, Idaho, Montana, New Mexico, Utah, and Wyoming resulted in a harvest of 1,336 RMP cranes, a 4 percent decrease from the record-high harvest of 1,392 in 2009–10.

The Lower Colorado River Valley Population (LCRVP) survey results indicate a slight increase from 2,264 birds in 2010 to 2,415 birds in 2011. However, despite this slight increase, the 3-year average fell to 2,360 LCRVP cranes, which is below the population objective of 2,500.

The Eastern Population (EP) rebounded from near extirpation in the late 1800s to almost 30,000 cranes by 1996. In the fall of 2010, the estimate of EP cranes was approximately 50,000 birds. As a result of this increase and their range expansion, the Atlantic and Mississippi Flyway Councils developed a cooperative management plan for this population, and criteria have been developed describing when hunting seasons can be opened. The State of Kentucky has proposed to initiate the first hunting season on this population in the 2011–12 season. Specifics of the proposal are discussed in the proposed frameworks for early-season regulations (76 FR 44730; July 26, 2011). A draft EA on the hunting of EP sandhill cranes, as allowed under the management plan, was prepared and can be found on our Web site at *http://www.fws.gov/migratorybirds*, or at *http://www.regulations.gov*.

Woodcock

Singing-ground and Wing-collection surveys were conducted to assess the population status of the American woodcock (*Scolopax minor*). The Singing-ground Survey is intended to measure long-term changes in woodcock population levels. Singing-ground Survey data for 2011 indicate that the number of singing male woodcock in the Eastern and Central Management Regions were unchanged from 2010. There were no significant 10-year trends in woodcock heard in the Eastern or Central Management Regions during 2001–2011, which marks the eighth consecutive year that the 10-year trend estimate for the Eastern Region was stable, while the trend in the Central Region returned to being not statistically significant after being negative last year. There were long-term (1968–2011) declines of 1.0 percent per year in both management regions. The Wing-collection Survey provides an index to recruitment. Wing-collection Survey data indicate that the 2010 recruitment index for the U.S. portion of the Eastern Region (1.5 immatures per adult female) was 1.2 percent lower than the 2009 index, and 10.2 percent lower than the long-term (1963–2009) average. The recruitment index for the U.S. portion of the Central Region (1.6 immatures per adult female) was 30.2 percent above the 2009 index and 2.1 percent below the long-term (1963–2009) average.

Band-Tailed Pigeons

Two subspecies of band-tailed pigeon occur north of Mexico, and they are managed as two separate populations in the United States: the Interior Population and the Pacific Coast Population. Information on the abundance and harvest of band-tailed pigeons is collected annually in the United States and British Columbia. Abundance information comes from the Breeding Bird Survey (BBS) and, for the Pacific Coast Population, the BBS and the Mineral Site Survey (MSS). Annual counts of Interior band-tailed pigeons seen and heard per route have declined since implementation of the BBS in 1968. No statistically significant trends in abundance are evident during the recent 5- and 10-year periods. The 2010 harvest of Interior band-tailed pigeons was estimated to be 5,000 birds. BBS counts of Pacific Coast band-tailed pigeons seen and heard per route also have declined since 1968, but trends in abundance during the recent 5- and 10-year periods were not significant. The MSS, however, provided evidence that abundance decreased during the recent 5- (–8.4 percent) and 7-year (–8.1 percent) (since survey implementation) periods. The 2010 estimate of harvest for Pacific Coast band-tailed pigeons was 18,400 birds.

Mourning Doves

The Mourning Dove Call-count Survey (CCS) data is analyzed within a Bayesian hierarchical modeling framework, consistent with analysis methods for other long-term point count surveys such as the American Woodcock Singing-ground Survey and the North American Breeding Bird Survey. According to the analysis of the CCS, there was no trend in counts of mourning doves heard over the most recent 10 years (2002–11) in the Eastern Management Unit. There was a negative trend in mourning doves heard for the Central and Western Management Units. Over the 46-year period, 1966–2011, the number of mourning doves heard per route decreased in all three dove management units. The number of doves seen per route was also collected during the CCS. For the past 10 years, there was no trend in doves seen for the Central and Western Management Units;

however, there was evidence of an increasing trend in the Eastern Management Unit. Over 46 years, there was a positive trend in doves seen in the Eastern Management Unit, and declining trends were indicated for the Central and Western Management Units. The preliminary 2010 harvest estimate for the United States was 17,230,400 mourning doves.

White-Winged Doves

Two States harbor substantial populations of white-winged doves: Arizona and Texas. California and New Mexico have much smaller populations. The Arizona Game and Fish Department monitors white-winged dove populations by means of a CCS to provide an annual index to population size. It runs concurrently with the Service's Mourning Dove CCS. The index of mean number of white-winged doves heard per route from this survey peaked at 52.3 in 1968, but then declined until about 2000. The index has stabilized at around 25 doves per route in the last few years; in 2011, the mean number of doves heard per route was 24.4. Arizona Game and Fish also historically monitored white-winged dove harvest. Harvest of white-winged doves in Arizona peaked in the late 1960s at approximately 740,000 birds, and has since declined and stabilized at around 100,000 birds; the preliminary 2010 Migratory Bird Harvest Information Program (HIP) estimate of harvest was 84,900 birds.

In Texas, white-winged doves continue to expand their breeding range. Nesting by white-winged doves has been recorded in most counties, with new colonies recently found in east Texas. Nesting is essentially confined to urban areas, but appears to be expanding to exurban areas. Concomitant with this range expansion has been a continuing increase in white-winged dove abundance. A new distance-based sampling protocol was implemented for Central and South Texas in 2007, and has been expanded each year. In 2010, officials surveyed 4,650 points statewide and estimated the urban population of breeding white-winged doves at 4.6 million. Current year's survey data are being analyzed and abundance estimates will be available later this summer. Additionally, the Texas Parks and Wildlife Department has an operational white-winged dove banding program and has banded 52,001 white-winged doves from 2006 to 2010. The estimated harvest of white-wings in Texas in the 2010 season was 1,436,800 birds. The Texas Parks and Wildlife Department continues to work to improve the scientific basis for management of white-winged doves.

In California, Florida, Louisiana, and New Mexico available BBS data indicate an increasing trend in the population indices between 1966 and 2010. According to HIP surveys, the preliminary harvest estimates were 78,200 white-winged doves in California, 6,200 in Florida, 4,600 in Louisiana, and 29,500 in New Mexico.

White-Tipped Doves

White-tipped doves occur primarily south of the United States–Mexico border; however, the species does occur in Texas. Monitoring information is presently limited. White-tipped doves are believed to be maintaining a relatively stable population in the Lower Rio Grande Valley of Texas. Distance-based sampling procedures implemented in Texas are also providing limited information on white-tipped dove abundance. Texas is working to improve the sampling frame to include the rural Rio Grande corridor in order to improve the utility of population indices. Annual estimates for white-tipped dove harvest in Texas average between 3,000 and 4,000 birds.

Hunting Season Proposals From Indian Tribes and Organizations

For the 2011–12 hunting season, we received requests from 25 Tribes and Indian organizations. In this proposed rule, we respond to these requests and also evaluate anticipated requests for 5 Tribes from whom we usually hear but from whom we have not yet received proposals. We actively solicit regulatory proposals from other tribal groups that are interested in working cooperatively for the benefit of waterfowl and other migratory game birds. We encourage Tribes to work with us to develop agreements for management of migratory bird resources on tribal lands.

It should be noted that this proposed rule includes generalized regulations for both early- and late-season hunting. A final rule will be published in a late-August 2011 **Federal Register** that will include tribal regulations for the early-hunting season. Early seasons generally begin around September 1 each year and most commonly include such species as American woodcock, sandhill cranes, mourning doves, and white-winged doves. Late seasons generally begin on or around September 24 and most commonly include waterfowl species.

In this current rulemaking, because of the compressed timeframe for establishing regulations for Indian Tribes and because final frameworks dates and other specific information are not available, the regulations for many tribal hunting seasons are described in relation to the season dates, season length, and limits that will be permitted when final Federal frameworks are announced for early- and late-season regulations. For example, daily bag and possession limits for ducks on some areas are shown as the same as permitted in Pacific Flyway States under final Federal frameworks, and limits for geese will be shown as the same permitted by the State(s) in which the tribal hunting area is located.

The proposed frameworks for early-season regulations were published in the **Federal Register** on July 26, 2011 (76 FR 44730); early-season final frameworks will be published in late August. Proposed late-season frameworks for waterfowl and coots will be published in mid-August, and the final frameworks for the late seasons will be published in mid-September. We will notify affected Tribes of season dates, bag limits, etc., as soon as final frameworks are established. As previously discussed, no action is required by Tribes wishing to observe migratory bird hunting regulations established by the State(s) where they are located. The proposed regulations for the 30 Tribes that meet the established criteria are shown below.

(a) Colorado River Indian Tribes, Colorado River Indian Reservation, Parker, Arizona (Tribal Members and Nontribal Hunters)

The Colorado River Indian Reservation is located in Arizona and California. The Tribes own almost all lands on the reservation, and have full wildlife management authority.

In their 2011–12 proposal, the Colorado River Indian Tribes requested split dove seasons. They propose that their early season begin September 1 and end September 15, 2011. Daily bag limits would be 10 mourning or white-winged doves in the aggregate. The late season for doves is proposed to open November 12, 2011, and close December 26, 2011. The daily bag limit would be 10 mourning doves. The possession limit would be twice the daily bag limit after the first day of the season. Shooting hours would be from one-half hour before sunrise to noon in the early season and until sunset in the late season. Other special tribally set regulations would apply.

The Tribes also propose duck hunting seasons. The season would open October 8, 2011, and run until January 22, 2012. The Tribes propose the same season dates for mergansers, coots, and common moorhens. The daily bag limit for ducks, including mergansers, would be seven, except that the daily bag limits

could contain no more than two hen mallards, two redheads, two Mexican ducks, two goldeneye, three scaup, one pintail, and two cinnamon teal. The season on canvasback is closed. The possession limit would be twice the daily bag limit after the first day of the season. The daily bag and possession limit for coots and common moorhens would be 25, singly or in the aggregate.

For geese, the Colorado River Indian Tribes propose a season of October 15, 2011, through January 22, 2012. The daily bag limit for geese would be three light geese and three dark geese. The possession limit would be six light geese and six dark geese after opening day.

In 1996, the Tribes conducted a detailed assessment of dove hunting. Results showed approximately 16,100 mourning doves and 13,600 white-winged doves were harvested by approximately 2,660 hunters who averaged 1.45 hunter-days. Field observations and permit sales indicate that fewer than 200 hunters participate in waterfowl seasons. Under the proposed regulations described here and based upon past seasons, we and the Tribes estimate harvest will be similar.

Hunters must have a valid Colorado River Indian Reservation hunting permit and a Federal Migratory Bird Stamp in their possession while hunting. Other special tribally set regulations would apply. As in the past, the regulations would apply both to tribal and nontribal hunters, and nontoxic shot is required for waterfowl hunting.

We propose to approve the Colorado River Indian Tribes regulations for the 2011–12 hunting season, given the seasons' dates fall within final flyway frameworks (applies to nontribal hunters only).

(b) Confederated Salish and Kootenai Tribes, Flathead Indian Reservation, Pablo, Montana (Tribal and Nontribal Hunters)

For the past several years, the Confederated Salish and Kootenai Tribes and the State of Montana have entered into cooperative agreements for the regulation of hunting on the Flathead Indian Reservation. The State and the Tribes are currently operating under a cooperative agreement signed in 1990 that addresses fishing and hunting management and regulation issues of mutual concern. This agreement enables all hunters to utilize waterfowl hunting opportunities on the reservation.

As in the past, tribal regulations for nontribal hunters would be at least as restrictive as those established for the Pacific Flyway portion of Montana. Goose season dates would also be at least as restrictive as those established for the Pacific Flyway portion of Montana. Shooting hours for waterfowl hunting on the Flathead Reservation are sunrise to sunset. Steel shot or other federally approved nontoxic shots are the only legal shotgun loads on the reservation for waterfowl or other game birds.

For tribal members, the Tribe proposes outside frameworks for ducks and geese of September 1, 2011, through March 9, 2012. Daily bag and possession limits were not proposed for tribal members.

The requested season dates and bag limits are similar to past regulations. Harvest levels are not expected to change significantly. Standardized check station data from the 1993–94 and 1994–95 hunting seasons indicated no significant changes in harvest levels and that the large majority of the harvest is by nontribal hunters.

We propose to approve the Tribes' request for special migratory bird regulations for the 2011–12 hunting season.

(c) Fond du Lac Band of Lake Superior Chippewa Indians, Cloquet, Minnesota (Tribal Members Only)

Since 1996, the Service and the Fond du Lac Band of Lake Superior Chippewa Indians have cooperated to establish special migratory bird hunting regulations for tribal members. The Fond du Lac's May 26, 2011, proposal covers land set apart for the band under the Treaties of 1837 and 1854 in northeastern and east-central Minnesota and the Band's Reservation near Duluth.

The band's proposal for 2011–12 is essentially the same as that approved last year except for a proposed sandhill crane season with separate regulations for the 1854 and 1837 ceded territories and reservation lands. The proposed 2011–12 waterfowl hunting season regulations for Fond du Lac are as follows:

Ducks

A. 1854 and 1837 Ceded Territories:

Season Dates: Begin September 17 and end November 27, 2011.

Daily Bag Limit: 18 ducks, including no more than 12 mallards (only 3 of which may be hens), 9 black ducks, 9 scaup, 9 wood ducks, 9 redheads, 9 pintails, and 9 canvasbacks.

B. Reservation:

Season Dates: Begin September 3 and end November 27, 2011.

Daily Bag Limit: 12 ducks, including no more than 8 mallards (only 2 of which may be hens), 6 black ducks, 6 scaup, 6 redheads, 6 pintails, 6 wood ducks, and 6 canvasbacks.

Mergansers

A. 1854 and 1837 Ceded Territories:

Season Dates: Begin September 17 and end November 27, 2011.

Daily Bag Limit: 15 mergansers, including no more than 6 hooded mergansers.

B. Reservation:

Season Dates: Begin September 3 and end November 27, 2011.

Daily Bag Limit: 10 mergansers, including no more than 4 hooded mergansers.

Canada Geese

All Areas:

Season Dates: Begin September 1 and end November 27, 2011.

Daily Bag Limit: 20 geese.

Sandhill Cranes

1854 Ceded Territory only:

Season Dates: Begin September 1 and end November 27, 2011.

Daily Bag Limit: One sandhill crane. A crane carcass tag is required prior to hunting.

Coots and Common Moorhens (Common Gallinules)

A. 1854 and 1837 Ceded Territories:

Season Dates: Begin September 17 and end November 27, 2011.

Daily Bag Limit: 20 coots and common moorhens, singly or in the aggregate.

B. Reservation:

Season Dates: Begin September 3 and end November 27, 2011.

Daily Bag Limit: 20 coots and common moorhens, singly or in the aggregate.

Sora and Virginia Rails

All Areas:

Season Dates: Begin September 1 and end November 27, 2011.

Daily Bag Limit: 25 sora and Virginia rails, singly or in the aggregate.

Common Snipe

All Areas:

Season Dates: Begin September 1 and end November 27, 2011.

Daily Bag Limit: Eight common snipe.

Woodcock

All Areas:

Season Dates: Begin September 1 and end November 27, 2011.

Daily Bag Limit: Three woodcock.

Mourning Dove

All Areas:

Season Dates: Begin September 1 and end October 30, 2011.

Daily Bag Limit: 30 mourning doves.

The following general conditions apply:

1. While hunting waterfowl, a tribal member must carry on his/her person a valid Ceded Territory License.

2. Shooting hours for migratory birds are one-half hour before sunrise to one-half hour after sunset.

3. Except as otherwise noted, tribal members will be required to comply with tribal codes that will be no less restrictive than the provisions of Chapter 10 of the Model Off-Reservation Code. Except as modified by the Service rules adopted in response to this proposal, these amended regulations parallel Federal requirements in 50 CFR part 20 as to hunting methods, transportation, sale, exportation, and other conditions generally applicable to migratory bird hunting.

4. Band members in each zone will comply with State regulations providing for closed and restricted waterfowl hunting areas.

5. There are no possession limits on any species, unless otherwise noted above. For purposes of enforcing bag limits, all migratory birds in the possession or custody of band members on ceded lands will be considered to have been taken on those lands unless tagged by a tribal or State conservation warden as having been taken on-reservation. All migratory birds that fall on reservation lands will not count as part of any off-reservation bag or possession limit.

The band anticipates harvest will be fewer than 500 ducks and geese.

We propose to approve the request for special migratory bird hunting regulations for the Fond du Lac Band of Lake Superior Chippewa Indians.

(d) Grand Traverse Band of Ottawa and Chippewa Indians, Suttons Bay, Michigan (Tribal Members Only)

In the 1995–96 migratory bird seasons, the Grand Traverse Band of Ottawa and Chippewa Indians and the Service first cooperated to establish special regulations for waterfowl. The Grand Traverse Band is a self-governing, federally recognized Tribe located on the west arm of Grand Traverse Bay in Leelanau County, Michigan. The Grand Traverse Band is a signatory Tribe of the Treaty of 1836. We have approved special regulations for tribal members of the 1836 treaty's signatory Tribes on ceded lands in Michigan since the 1986–87 hunting season.

For the 2011–12 season, the Tribe requests that the tribal member duck season run from September 18, 2011, through January 18, 2012. A daily bag limit of 20 would include no more than 5 pintail, 3 canvasback, 1 hooded merganser, 5 black ducks, 5 wood ducks, 3 redheads, and 9 mallards (only 4 of which may be hens).

For Canada and snow geese, the Tribe proposes a September 1 through November 30, 2011, and a January 1 through February 8, 2012, season. For white-fronted geese and brant, the Tribe proposes a September 20 through November 30, 2011, season. The daily bag limit for Canada and snow geese would be 10, and the daily bag limit for white-fronted geese and including brant would be 5 birds. We further note that based on available data (of major goose migration routes), it is unlikely that any Canada geese from the Southern James Bay Population will be harvested by the Tribe.

For woodcock, the Tribe proposes a September 1 through November 14, 2011, season. The daily bag limit will not exceed five birds. For mourning doves, snipe, and rails, the Tribe proposes a September 1 through November 14, 2011, season. The daily bag limit would be 10 per species.

All other Federal regulations contained in 50 CFR part 20 would apply. The Tribe proposes to monitor harvest closely through game bag checks, patrols, and mail surveys. Harvest surveys from the 2006–07 hunting season indicated that approximately 15 tribal hunters harvested an estimated 112 ducks and 50 Canada geese.

We propose to approve the Grand Traverse Band of Ottawa and Chippewa Indians requested 2011–12 special migratory bird hunting regulations.

(e) Great Lakes Indian Fish and Wildlife Commission, Odanah, Wisconsin (Tribal Members Only)

Since 1985, various bands of the Lake Superior Tribe of Chippewa Indians have exercised judicially recognized off-reservation hunting rights for migratory birds in Wisconsin. The specific regulations were established by the Service in consultation with the Wisconsin Department of Natural Resources and the Great Lakes Indian Fish and Wildlife Commission. (GLIFWC is an intertribal agency exercising delegated natural resource management and regulatory authority from its member Tribes in portions of Wisconsin, Michigan, and Minnesota.) Beginning in 1986, a Tribal season on ceded lands in the western portion of the Michigan Upper Peninsula was developed in coordination with the Michigan Department of Natural Resources. We have approved regulations for Tribal members in both Michigan and Wisconsin since the 1986–87 hunting season. In 1987, GLIFWC requested, and we approved, regulations to permit Tribal members to hunt on ceded lands in Minnesota, as well as in Michigan and Wisconsin. The States of Michigan and Wisconsin originally concurred with the regulations, although both Wisconsin and Michigan have raised various concerns over the years. Minnesota did not concur with the original regulations, stressing that the State would not recognize Chippewa Indian hunting rights in Minnesota's treaty area until a court with jurisdiction over the State acknowledges and defines the extent of these rights. In 1999, the U.S. Supreme Court upheld the existence of the tribes' treaty reserved rights in *Minnesota* v. *Mille Lacs Band,* 199 S.Ct. 1187 (1999).

We acknowledge all of the States' concerns, but point out that the U.S. Government has recognized the Indian treaty reserved rights, and that acceptable hunting regulations have been successfully implemented in Minnesota, Michigan, and Wisconsin. Consequently, in view of the above, we have approved regulations since the 1987–88 hunting season on ceded lands in all three States. In fact, this recognition of the principle of treaty reserved rights for band members to hunt and fish was pivotal in our decision to approve a 1991–92 season for the 1836 ceded area in Michigan. Since then, in the 2007 Consent Decree the 1836 Treaty Tribes' and Michigan Department of Natural Resources and Environment established court-approved regulations pertaining to off-reservation hunting rights for migratory birds.

For 2011, the GLIFWC proposed off-reservation special migratory bird hunting regulations on behalf of the member Tribes of the Voigt Intertribal Task Force of the GLIFWC (for the 1837 and 1842 Treaty areas) and the Bay Mills Indian Community (for the 1836 Treaty area). Member Tribes of the Task Force are: the Bad River Band of the Lake Superior Tribe of Chippewa Indians, the Lac Courte Oreilles Band of Lake Superior Chippewa Indians, the Lac du Flambeau Band of Lake Superior Chippewa Indians, the Red Cliff Band of Lake Superior Chippewa Indians, the St. Croix Chippewa Indians of Wisconsin, the Sokaogon Chippewa Community (Mole Lake Band), all in Wisconsin; the Mille Lacs Band of Chippewa Indians in Minnesota; the Lac Vieux Desert Band of Chippewa Indians, and the Keweenaw Bay Indian Community in Michigan.

The GLIFWC 2011 proposal is generally similar to last year's regulations, except for several significant changes. Specifically, the GLIFWC proposal allows the use of

electronic calls in the 1837 and 1842 Treaty Areas; extends shooting hours by 45 minutes to 1 hour after sunset in the 1837 and 1842 Treaty Areas and by 15 minutes to 30 minutes after sunset in the 1836 Treaty Area; eliminates possession limits in the 1837 and 1842 Treaty Areas; allows the use of unattended decoys in Michigan; increases the daily bag limits for ducks in the 1837 and 1842 Treaty Areas from 30 to 40 ducks; and eliminates all species restrictions within the bag limit for ducks in the 1837 and 1842 Treaty Areas.

GLIFWC states that the proposed regulatory changes are intended to increase tribal subsistence harvest opportunities, while protecting migratory bird populations. Under the GLIFWC proposed regulations, GLIFWC expects total ceded territory harvest to be approximately 1,575 ducks and 300 geese and 150 geese, which is roughly similar to anticipated levels in previous years. GLIWFC further anticipates that tribal harvest will remain low given the small number of tribal hunters and the limited opportunity to harvest more than a small number of birds on most hunting trips.

Recent GLIFWC harvest surveys (1996–98, 2001, 2004, and 2007–08) indicate that tribal off-reservation waterfowl harvest has averaged less than 1,050 ducks and 200 geese annually. In the latest survey year for which we have specific results (2004), an estimated 53 hunters took an estimated 421 trips and harvested 645 ducks (1.5 ducks per trip) and 84 geese (0.2 geese per trip). Analysis of hunter survey data over 1996–2004 indicates a general downward trend in both harvest and hunter participation.

While we acknowledge that tribal harvest and participation has declined in recent years, we do not believe that the GLIFWC's proposal for tribal waterfowl seasons on ceded lands in Wisconsin, Michigan, and Minnesota for the 2011 season is the best plan for increasing tribal participation or for the conservation of migratory birds. More specific discussion follows below.

Allowing Electronic Calls

The issue of allowing electronic calls and other electronic devices for migratory game bird hunting has been highly debated and highly controversial over the last 40 years, similar to other prohibited hunting methods such as baiting. Electronic calls, *i.e.,* the use or aid of recorded or electronic amplified bird calls or sounds, or recorded or electrically amplified imitations of bird calls or sounds to lure or attract migratory game birds to hunters, was Federally prohibited in 1957 because of its effectiveness in aiding the harvest of migratory birds and is generally not considered a legitimate component of hunting. In 1999, after much debate, the migratory bird regulations were revised to allow the use of electronic calls for the take of light geese (lesser snow geese and Ross geese) during a light-goose-only season when all other waterfowl and crane hunting seasons, excluding falconry, were closed (64 FR 7507, February 16, 1999; 64 FR 71236, December 20, 1999; and 73 FR 65926, November 5, 2008). The regulations were subsequently changed also in 2006 to allow the use of electronic calls for the take of resident Canada geese during Canada-goose-only September seasons when all other waterfowl and crane seasons, excluding falconry, were closed (71 FR 45964, August 10, 2006). In both instances, these changes were made in order to significantly increase the harvest of these species due to either serious population overabundance, or depredation issues, or public health and safety issues, or both.

Available information from the use of additional hunting methods, such as electronic calls, during the special light-goose seasons indicate that total harvest increased approximately 50–69 percent. On specific days when light-goose special regulations were in effect, the mean light goose harvest increased 244 percent. One research study found that lesser snow goose flocks were 5.0 times more likely to fly within gun range (≤50 meters) in response to electronic calls than to traditional calls and the mean number of snow geese killed per hour per hunter averaged 9.1 times greater for electronic calls than for traditional calls. We believe these results are applicable to most waterfowl species.

Removal of the electronic call prohibition would be inconsistent with our conservation concerns. Given available evidence on the effectiveness of electronic calls, we believe the potential for overharvest in localized areas could contribute to long-term population declines. Further, it is possible that hunter participation could increase beyond GLIFWC's estimates (50 percent) and could result in additional conservation impacts, particularly on locally breeding populations. Thus, we do not support allowing the use of electronic calls in the 1837 and 1842 Treaty Areas.

Additionally, given the fact that tribal waterfowl hunting covered by this proposal would occur on ceded lands that are not in the ownership of the Tribes, we believe the use of electronic calls to take waterfowl would lead to confusion and frustration on the part of the public, hunters, wildlife-management agencies, and law enforcement officials due to the inherent difficulties of different sets of hunting regulations for different areas and groups of hunters. Moreover, the allowance of electronic calls for tribal hunting on ceded lands would make those lands and other adjacent areas off-limits to waterfowl hunting anytime tribal hunters were hunting with electronic calls (due to the influence of electronic calls on birds).

Expanded Shooting Hours

Normally, shooting hours for migratory game birds are one-half hour before sunrise to sunset. A number of reasons and concerns have been cited for extending shooting hours past sunset. Potential impacts to some locally breeding populations (*e.g.,* wood ducks), hunter safety, difficulty of identifying birds, retrieval of downed birds, and impacts on law enforcement are some of the normal concerns raised when discussing potential expansions of shooting hours. However, despite these concerns, in 2007, we supported the expansion of shooting hours by 15 minutes after sunset in the 1837, 1842, and 1836 Treaty Areas (72 FR 58452, October 15, 2007). We had previously supported this expansion in other tribal areas and have not been made aware of any wide-scale problems. Further, at that time, we believed that the continuation of a specific species restriction within the daily bag limit for mallards, and the implementation of a species restriction within the daily bag limit for wood ducks, would allay potential conservation concerns for these species. We supported the increase with the understanding that we would need to closely monitor tribal harvest through either GLIFWC's own increased harvest surveys or GLIFWC's assisting the Service to survey tribal hunters.

At this time, however, we cannot support increasing the shooting hours by 45 minutes in the 1837 and 1842 Treaty Areas (to 60 minutes after sunset) and by 15 minutes in the 1836 Treaty Area (to 30 minutes after sunset). Significantly extending the shooting hours by 45 minutes only heightens our previously identified concerns regarding species identification, species conservation of locally breeding populations, retrieval of downed birds, hunter safety, and law enforcement impacts. Generally, it is widely considered dark 30 minutes after sunset, and we see no viable remedies to allay our concerns.

Increasing the Overall Daily Bag Limit for Ducks

Based on the increased bag limits, GLIFWC is estimating a relatively small additional duck harvest (1,050 to 1,575). However, it is possible that hunter participation could increase beyond their estimates (50 percent) and could result in a conservation impact, particularly on locally breeding populations. Further, based on the GLIFWC's own harvest data, present daily bag limits do not appear to be a hindrance or limiting factor for Tribal harvest, and increasing the daily bag limit to 40 ducks would be far in excess (more than double) of anything we currently have experience with regarding tribal migratory bird hunting regulations (except for GLIFWC's present 30-duck daily bag limit). Until we have additional information on which we could assess potential impacts, we do not favor increasing daily bag limits for ducks to the extent GLIFWC has proposed. We note that in 2007, in an effort to obtain the necessary information, we implemented a pilot expansion of the daily bag limit to 30 birds per day in the 1837 and 1842 Treaty Areas. We supported this with the understanding that we would need to closely monitor tribal harvest through either GLIFWC's own increased harvest surveys or GLIFWC's assisting the Service to survey tribal hunters. We again reiterate our request for GLIFWC to continue their current harvest survey based on our implementation of a pilot bag limit increase for ducks in the 1837 and 1842 Treaty Areas in 2007, particularly for species such as mallards which were subsequently significantly increased in 2008 (from 10 to 30 per day). We believe the pilot bag limits implemented then, and changed in 2008, should warrant at least several years of data evaluation using GLIFWC's current harvest survey. To date, we have not been presented with adequate data on which to base an informed decision.

Eliminating the Possession Limit

We believe GLIFWC's proposal to eliminate all possession limits in the 1837 and 1842 Treaty Areas could have potential resource conservation impacts. Possession limits are normally two times the daily bag limit and together with daily bag limits have been an integral part of the harvest management of migratory game birds when regulating take during sport hunting seasons since the signing of the Migratory Bird Treaty Act (1918). Back then, daily bag limits for most species of migratory game birds were relatively large and there were no possession limits. As daily bag limits were reduced due to concern over migratory game bird status, and concomitant with improved and more commonplace food preservation equipment (particularly home freezers), a possession limit of twice the daily bag limit was adopted in 1930.

Currently, definitions of possession limit are regulations contained in the U.S. Code of Federal Regulations (CFR) in 50 CFR part 20. Further, the increment of the possession limit for sport hunting seasons relative to the daily bag limit is an annual regulation and is published in the frameworks for early and late seasons.

While daily bag limits have proven to be an effective tool in regulating harvests, the degree to which possession limits have been able to regulate harvests is more equivocal. Many assert that migratory bird population management is not affected by reasonable changes in possession limits and would have a minimal, if any, effect on harvest (and therefore population status) of most migratory bird stocks. Others that believe that possession limits of twice the daily bag limit that we have had in place since 1930 are no longer appropriate for today's more mobile society with hunters traveling more often and longer distances to hunt migratory birds. Further, possession limits in Canada have recently been changed, and possession limits are no longer consistent between our respective Treaty nations. However, from a law enforcement aspect, the possession limit has been an important tool for the determination of hunting violations both in the field and when stored, such as in a person's home freezer.

In 2010, several Flyway Councils forwarded recommendations to the Service for a change to the possession limits for certain migratory birds, beginning in 2011. As such, we began a review of possession limits and their use (75 FR 58250, September 23, 2010). We plan to make some formal recommendations and proposals regarding possession limits and their use in the near future. Until then, however, we do not support wide-scale changes in the current regulations regarding possession limits.

Allowing the Use of Unattended Decoys in Michigan

In Michigan, State law requires that unattended decoys may not be left out overnight. While we believe that there may be safety concerns with elimination of such a restriction, we take no position on the relative need or lack of need for such a restriction. Other than regulations on National Wildlife Refuges and other Federal lands, there are no Federal restrictions requiring the removal of unattended decoys.

Additionally, given the fact that tribal waterfowl hunting covered by this proposal would occur on ceded lands that are not in the ownership of the Tribes, we believe the use of unattended decoys to ''reserve'' hunting areas in public waters (*i.e.,* those lands in the ceded territories outside of lands directly controlled by the Tribes) could lead to confusion and frustration on the part of the public, hunters, wildlife-management agencies, and law enforcement officials due to the inherent difficulties of different sets of hunting regulations for different areas and groups of hunters. We also believe the allowance of unattended decoys for tribal hunting on ceded lands would likely lead to increased acrimony and debate regarding issues of fairness from non-tribal hunters.

Removal of Species Restrictions

We have several concerns with GLIFWC's proposal to remove all species restrictions within the overall duck daily bag limits in the 1837 and 1842 Treaty Areas. We have a number of duck species that are either showing long-term downward population trends (pintails and black ducks), or other species for which an increased daily bag limit of 40 birds per day could potentially have conservation impacts (canvasbacks), particularly on locally breeding ducks (mallards and wood ducks). Overharvest of these species in localized areas due to removal of species restrictions could contribute to long-term declines. Removal of species restrictions on these species would be inconsistent with our current conservation concerns. Thus, we continue to support the following species restrictions within the overall daily bag limit in all three of the Treaty Areas: 5 black ducks, 5 pintails, and 5 canvasbacks. We believe these species restrictions are commensurate with each individual species' population status.

Further, we remind GLIFWC that in 2008, we removed mallards from the internal daily bag limit restrictions (73 FR 51704, September 4, 2008). At that time, while we had expressed concerns in the past (72 FR 58452, October 15, 2007; 73 FR 48098, August 15, 2008) with GLIFWC's proposal for removal of mallard restrictions within the overall duck daily bag limits in the 1837, 1842, and 1836 Treaty Areas, we believed that an increase in the daily bag limit of mallards (by removal of the internal bag limit restriction) from 10 mallards per day to 30 mallards per day in the 1837 and 1842 Treaty Areas and 20 mallards

per day in the 1836 Treaty Area would have no significant conservation impacts on locally breeding mallards. We reached this conclusion based largely on the fact that the tribal harvest, both past and anticipated, is relatively minuscule—around 600 mallards—and widely distributed. However, we reiterated our request for GLIFWC to continue with their current harvest survey based on our implementation of a pilot bag limit increase for ducks in the 1837 and 1842 Treaty Areas in 2007. We believed the pilot bag limits implemented in 2007 should warrant at least several years of data evaluation using GLIFWC's current harvest survey. We reiterate those same concerns today and continue to stress the importance of several years of data evaluation in order to make well-informed decisions.

Summary

In summary, given the above information, we believe that the regulations advanced by the GLIFWC for the 2011–12 hunting season are not in the best interests of the migratory bird resource. As we have previously stated (71 FR 55076, September 20, 2006; and 72 FR 58452, October 15, 2007), we are willing to meet with the GLIFWC to explore possible ways to increase tribal participation in migratory bird hunting opportunities. We appreciated the opportunity we had to meet with the Tribes in 2008 to discuss the mutual concerns we have for the migratory bird resource and future hunting opportunities.

The proposed 2011–12 waterfowl hunting season regulations apply to all treaty areas (except where noted) for GLIFWC as follows:

Ducks:

Season Dates: Begin September 15 and end December 31, 2011.

Daily Bag Limit: 30 ducks, including no more than 5 black ducks, 5 pintails, and 5 canvasbacks.

Mergansers:

Season Dates: Begin September 15 and end December 31, 2011.

Daily Bag Limit: 10 mergansers.

Geese:

Season Dates: Begin September 1 and end December 31, 2011. In addition, any portion of the ceded territory that is open to State-licensed hunters for goose hunting outside of these dates will also be open concurrently for tribal members.

Daily Bag Limit: 20 geese in aggregate.

Other Migratory Birds:

A. Coots and Common Moorhens (Common Gallinules):

Season Dates: Begin September 15 and end December 31, 2011.

Daily Bag Limit: 20 coots and common moorhens (common gallinules), singly or in the aggregate.

B. Sora and Virginia Rails:

Season Dates: Begin September 15 and end December 31, 2011.

Daily Bag and Possession Limits: 20, singly or in the aggregate, 25.

C. Common Snipe:

Season Dates: Begin September 15 and end December 31, 2011.

Daily Bag Limit: 16 common snipe.

D. Woodcock:

Season Dates: Begin September 6 and end December 1, 2011.

Daily Bag Limit: 10 woodcock.

E. Mourning Dove: 1837 and 1842 Ceded Territories only.

Season Dates: Begin September 1 and end November 9, 2011.

Daily Bag Limit: 15 mourning doves.

General Conditions

A. All tribal members will be required to obtain a valid tribal waterfowl hunting permit.

B. Except as otherwise noted, tribal members will be required to comply with tribal codes that will be no less restrictive than the model ceded territory conservation codes approved by Federal courts in the *Lac Courte Oreilles* v. *State of Wisconsin (Voigt)* and *Mille Lacs Band* v. *State of Minnesota* cases. Chapter 10 in each of these model codes regulates ceded territory migratory bird hunting. Both versions of Chapter 10 parallel Federal requirements as to hunting methods, transportation, sale, exportation, and other conditions generally applicable to migratory bird hunting. They also automatically incorporate by reference the Federal migratory bird regulations adopted in response to this proposal.

C. Particular regulations of note include:

1. Nontoxic shot will be required for all waterfowl hunting by tribal members.

2. Tribal members in each zone will comply with tribal regulations providing for closed and restricted waterfowl hunting areas. These regulations generally incorporate the same restrictions contained in parallel State regulations.

3. Possession limits for each species are double the daily bag limit, except on the opening day of the season, when the possession limit equals the daily bag limit, unless otherwise noted above. Possession limits are applicable only to transportation and do not include birds that are cleaned, dressed, and at a member's primary residence. For purposes of enforcing bag and possession limits, all migratory birds in the possession and custody of tribal members on ceded lands will be considered to have been taken on those lands unless tagged by a tribal or State conservation warden as taken on reservation lands. All migratory birds that fall on reservation lands will not count as part of any off-reservation bag or possession limit.

4. The baiting restrictions included in the respective section 10.05(2)(h) of the model ceded territory conservation codes will be amended to include language which parallels that in place for nontribal members as published at 64 FR 29799, June 3, 1999.

5. The shell limit restrictions included in the respective section 10.05(2)(b) of the model ceded territory conservation codes will be removed.

6. Hunting hours shall be from a half hour before sunrise to 15 minutes after sunset.

D. Michigan—Duck Blinds and Decoys. Tribal members hunting in Michigan will comply with duck blind and decoy regulations contained in tribal conservation codes listed under Item B of the General Conditions, except that unattended decoys can be kept out overnight in the Michigan portion of the 1842 ceded territory.

We propose to approve the above GLIFWC regulations for the 2011–12 hunting season.

(f) Jicarilla Apache Tribe, Jicarilla Indian Reservation, Dulce, New Mexico (Tribal Members and Nontribal Hunters)

The Jicarilla Apache Tribe has had special migratory bird hunting regulations for tribal members and nonmembers since the 1986–87 hunting season. The Tribe owns all lands on the reservation and has recognized full wildlife management authority. In general, the proposed seasons would be more conservative than allowed by the Federal frameworks of last season and by States in the Pacific Flyway.

The Tribe proposed a 2011–12 waterfowl and Canada goose season beginning October 8, 2011, and a closing date of November 30, 2011. Daily bag and possession limits for waterfowl would be the same as Pacific Flyway States. The Tribe proposes a daily bag limit for Canada geese of two. Other regulations specific to the Pacific Flyway guidelines for New Mexico would be in effect.

During the Jicarilla Game and Fish Department's 2010–11 season, estimated duck harvest was 551, which is within the historical harvest range. The species composition in the past has included mainly mallards, gadwall, wigeon, and teal. Northern pintail comprised less than one percent of the total harvest in

2010. The estimated harvest of geese was 16 birds.

The proposed regulations are essentially the same as were established last year. The Tribe anticipates the maximum 2011–12 waterfowl harvest would be around 500 ducks and 15–20 geese.

We propose to approve the Tribe's requested 2011–12 hunting seasons.

(g) Kalispel Tribe, Kalispel Reservation, Usk, Washington (Tribal Members and Nontribal Hunters)

The Kalispel Reservation was established by Executive Order in 1914, and currently comprises approximately 4,600 acres. The Tribe owns all Reservation land and has full management authority. The Kalispel Tribe has a fully developed wildlife program with hunting and fishing codes. The Tribe enjoys excellent wildlife management relations with the State. The Tribe and the State have an operational Memorandum of Understanding with emphasis on fisheries but also for wildlife.

The nontribal member seasons described below pertain to a 176-acre waterfowl management unit and 800 acres of reservation land with a guide for waterfowl hunting. The Tribe is utilizing this opportunity to rehabilitate an area that needs protection because of past land use practices, as well as to provide additional waterfowl hunting in the area. Beginning in 1996, the requested regulations also included a proposal for Kalispel-member-only migratory bird hunting on Kalispel-ceded lands within Washington, Montana, and Idaho.

For the 2011–12 migratory bird hunting seasons, the Kalispel Tribe proposed tribal and nontribal member waterfowl seasons. The Tribe requests that both duck and goose seasons open at the earliest possible date and close on the latest date under Federal frameworks.

For nontribal hunters on reservation, the Tribe requests the seasons open at the earliest possible date and remain open, for the maximum amount of open days. Specifically, the Tribe requests that the season for ducks begin September 23, 2011, and end January 31, 2012. In that period, nontribal hunters would be allowed to hunt approximately 102 days. Hunters should obtain further information on specific hunt days from the Kalispel Tribe.

The Tribe also requests the season for geese run from September 2 to September 16, 2011, and from October 1, 2011, to January 31, 2012. Total number of days should not exceed 107. Nontribal hunters should obtain further information on specific hunt days from the Tribe. Daily bag and possession limits would be the same as those for the State of Washington.

The Tribe reports a 2010–11 nontribal harvest of 100 ducks. Under the proposal, the Tribe expects harvest to be similar to last year and less than 100 geese and 200 ducks.

All other State and Federal regulations contained in 50 CFR part 20, such as use of nontoxic shot and possession of a signed migratory bird hunting stamp, would be required.

For tribal members on Kalispel-ceded lands, the Kalispel Tribe proposes season dates consistent with Federal flyway frameworks. Specifically, the Tribe requests outside frameworks for ducks of October 1, 2011, through January 31, 2012, and for geese of September 1, 2011, through January 31, 2012. The Tribe requests that both duck and goose seasons open at the earliest possible date and close on the latest date under Federal frameworks. During that period, the Tribe proposes that the season run continuously. Daily bag and possession limits would be concurrent with the Federal rule.

The Tribe reports that there was no tribal harvest. Under the proposal, the Tribe expects harvest to be less than 200 birds for the season with less than 100 geese. Tribal members would be required to possess a signed Federal migratory bird stamp and a tribal ceded lands permit.

We propose to approve the regulations requested by the Kalispel Tribe, provided that the nontribal seasons conform to Treaty limitations and final Federal frameworks for the Pacific Flyway.

(h) Klamath Tribe, Chiloquin, Oregon (Tribal Members Only)

The Klamath Tribe currently has no reservation, per se. However, the Klamath Tribe has reserved hunting, fishing, and gathering rights within its former reservation boundary. This area of former reservation, granted to the Klamaths by the Treaty of 1864, is over 1 million acres. Tribal natural resource management authority is derived from the Treaty of 1864, and carried out cooperatively under the judicially enforced Consent Decree of 1981. The parties to this Consent Decree are the Federal Government, the State of Oregon, and the Klamath Tribe. The Klamath Indian Game Commission sets the seasons. The tribal biological staff and tribal regulatory enforcement officers monitor tribal harvest by frequent bag checks and hunter interviews.

For the 2011–12 season, the Tribe requests proposed season dates of October 1, 2011, through January 31, 2012. Daily bag limits would be 9 for ducks, 9 for geese, and 9 for coot, with possession limits twice the daily bag limit. Shooting hours would be one-half hour before sunrise to one-half hour after sunset. Steel shot is required.

Based on the number of birds produced in the Klamath Basin, this year's harvest would be similar to last year's. Information on tribal harvest suggests that more than 70 percent of the annual goose harvest is local birds produced in the Klamath Basin.

We propose to approve the Klamath Tribe's requested 2011–12 special migratory bird hunting regulations.

(i) Leech Lake Band of Ojibwe, Cass Lake, Minnesota (Tribal Members Only)

The Leech Lake Band of Ojibwe is a federally recognized Tribe located in Cass Lake, Minnesota. The reservation employs conservation officers to enforce conservation regulations. The Service and the Tribe have cooperatively established migratory bird hunting regulations since 2000.

For the 2011–12 season, the Tribe requests a duck season starting on September 17 and ending December 31, 2011, and a goose season to run from September 1 through December 31, 2011. Daily bag limits for ducks would be 10, including no more than 5 pintail, 5 canvasback, and 5 black ducks. Daily bag limits for geese would be 10. Possession limits would be twice the daily bag limit. Shooting hours are one-half hour before sunrise to one-half hour after sunset.

The annual harvest by tribal members on the Leech Lake Reservation is estimated at 500–1,000 birds.

We propose to approve the Leech Lake Band of Ojibwe's special migratory bird hunting season.

(j) Little River Band of Ottawa Indians, Manistee, Michigan (Tribal Members Only)

The Little River Band of Ottawa Indians is a self-governing, federally recognized Tribe located in Manistee, Michigan, and a signatory Tribe of the Treaty of 1836. We have approved special regulations for tribal members of the 1836 treaty's signatory Tribes on ceded lands in Michigan since the 1986–87 hunting season. Ceded lands are located in Lake, Mason, Manistee, and Wexford Counties. The Band normally proposes regulations to govern the hunting of migratory birds by Tribal members within the 1836 Ceded Territory as well as on the Band's Reservation.

For the 2011–12 season, we assume the Little River Band of Ottawa Indians would propose a duck and merganser season from September 15, 2011, through January 20, 2012. A daily bag limit of 12 ducks would include no more than 2 pintail, 2 canvasback, 3 black duck, 3 wood ducks, 3 redheads, 6 mallards (only 2 of which may be a hen), and 1 hooded merganser. Possession limits would be twice the daily bag limit.

For white-fronted geese, snow geese, and brant, the Tribe usually proposes a September 20 through November 30, 2011, season. Daily bag limits would be five geese.

For Canada geese only, the Tribe usually proposes a September 1, 2011, through February 8, 2012, season with a daily bag limit of five Canada geese. The possession limit would be twice the daily bag limit.

For snipe, woodcock, rails, and mourning doves, the Tribe usually proposes a September 1 to November 14, 2011, season. The daily bag limit would be 10 common snipe, 5 woodcock, 10 rails, and 10 mourning doves. Possession limits for all species would be twice the daily bag limit.

The Tribe monitored harvest through mail surveys. General conditions were as follows:

A. All tribal members will be required to obtain a valid tribal resource card and 2011–12 hunting license.

B. Except as modified by the Service rules adopted in response to this proposal, these amended regulations parallel all Federal regulations contained in 50 CFR part 20.

C. Particular regulations of note include:

(1) Nontoxic shot will be required for all waterfowl hunting by tribal members.

(2) Tribal members in each zone will comply with tribal regulations providing for closed and restricted waterfowl hunting areas. These regulations generally incorporate the same restrictions contained in parallel State regulations.

D. Tribal members hunting in Michigan will comply with tribal codes that contain provisions parallel to Michigan law regarding duck blinds and decoys.

We plan to approve Little River Band of Ottawa Indians' special migratory bird hunting seasons upon receipt of their proposal based on the provisions described above.

(k) The Little Traverse Bay Bands of Odawa Indians, Petoskey, Michigan (Tribal Members Only)

The Little Traverse Bay Bands of Odawa Indians (LTBB) is a self-governing, federally recognized Tribe located in Petoskey, Michigan, and a signatory Tribe of the Treaty of 1836. We have approved special regulations for tribal members of the 1836 treaty's signatory Tribes on ceded lands in Michigan since the 1986–87 hunting season.

For the 2011–12 season, the Little Traverse Bay Bands of Odawa Indians propose regulations similar to those of other Tribes in the 1836 treaty area. LTBB proposes the regulations to govern the hunting of migratory birds by tribal members on the LTBB reservation and within the 1836 Treaty Ceded Territory. The tribal member duck and merganser season would run from September 15, 2011, through January 31, 2012. A daily bag limit of 20 ducks and 10 mergansers would include no more than 5 hen mallards, 5 pintail, 5 canvasback, 5 scaup, 5 hooded merganser, 5 black ducks, 5 wood ducks, and 5 redheads.

For Canada geese, the Tribe proposes a September 1, 2011, through February 8, 2012, season. The daily bag limit for Canada geese would be 20 birds. We further note that based on available data (of major goose migration routes), it is unlikely that any Canada geese from the Southern James Bay Population would be harvested by the Tribe. Possession limits are twice the daily bag limit.

For woodcock, the Tribe proposes a September 1, 2011, to December 1, 2011, season. The daily bag limit will not exceed 10 birds. For snipe, the Tribe proposes a September 1 to December 31, 2011, season. The daily bag limit will not exceed 16 birds. For mourning doves, the Tribe proposes a September 1 to November 14, 2011, season. The daily bag limit will not exceed 15 birds. For Virginia and sora rails, the Tribe proposes a September 1 to December 31, 2011, season. The daily bag limit will not exceed 20 birds per species. For coots and gallinules, the Tribe proposes a September 15 to December 31, 2011, season. The daily bag limit will not exceed 20 birds per species. The possession limit will not exceed 2 days' bag limit for all birds.

All other Federal regulations contained in 50 CFR part 20 would apply.

The Tribe proposes to monitor harvest closely through game bag checks, patrols, and mail surveys. In particular, the Tribe proposes monitoring the harvest of Southern James Bay Canada geese to assess any impacts of tribal hunting on the population.

We propose to approve the Little Traverse Bay Bands of Odawa Indians' requested 2011–12 special migratory bird hunting regulations.

(l) Lower Brule Sioux Tribe, Lower Brule Reservation, Lower Brule, South Dakota (Tribal Members and Nontribal Hunters)

The Lower Brule Sioux Tribe first established tribal migratory bird hunting regulations for the Lower Brule Reservation in 1994. The Lower Brule Reservation is about 214,000 acres in size and is located on and adjacent to the Missouri River, south of Pierre. Land ownership on the reservation is mixed, and until recently, the Lower Brule Tribe had full management authority over fish and wildlife via an MOA with the State of South Dakota. The MOA provided the Tribe jurisdiction over fish and wildlife on reservation lands, including deeded and Corps of Engineers-taken lands. For the 2011–12 season, the two parties have come to an agreement that provides the public a clear understanding of the Lower Brule Sioux Wildlife Department license requirements and hunting season regulations. The Lower Brule Reservation waterfowl season is open to tribal and nontribal hunters.

For the 2011–12 migratory bird hunting season, the Lower Brule Sioux Tribe proposes a nontribal member duck, merganser, and coot season length of 97 days, or the maximum number of days allowed by Federal frameworks in the High Plains Management Unit for this season. The Tribe proposes a duck season from September 27, 2011, through January 1, 2012. The daily bag limit would be six birds, including no more than one hen mallard, one pintail, two redheads, one canvasback, two wood ducks, two scaup, and one mottled duck. The daily bag limit for mergansers would be five, only two of which could be a hooded merganser. The daily bag limit for coots would be 15. Possession limits would be twice the daily bag limits.

The Tribe's proposed nontribal-member Canada goose season would run from October 29, 2011, through February 12, 2012 (107-day season length), with a daily bag limit of three Canada geese. The Tribe's proposed nontribal member white-fronted goose season would run from October 29, 2011, through January 6, 2012, and January 28 through February 12, 2012, with a daily bag limit of one white-fronted geese. The Tribe's proposed nontribal-member light goose season would run from October 29, 2011, through January 12, 2012, and February

4 through March 10, 2012. The light goose daily bag limit would be 20. Possession limits would be twice the daily bag limits.

For tribal members, the Lower Brule Sioux Tribe proposes a duck, merganser, and coot season from September 24, 2011, through March 10, 2012. The daily bag limit would be six ducks, including no more than one hen mallard, one pintail, two redheads, one canvasback, two wood ducks, two scaup, and one mottled duck. The daily bag limit for mergansers would be five, only two of which could be hooded mergansers. The daily bag limit for coots would be 15. Possession limits would be twice the daily bag limits.

The Tribe's proposed Canada goose season for tribal members would run from September 24, 2011, through March 10, 2012, with a daily bag limit of three Canada geese. The Tribe's proposed white-fronted goose tribal season would run from September 24, 2011, through March 10, 2012, with a daily bag limit of two white-fronted geese. The Tribe's proposed light goose tribal season would run from September 24, 2011, through March 10, 2012. The light goose daily bag limit would be 20. Possession limits would be twice the daily bag limits.

In the 2010–11 season, hunters harvested 793 geese and 462 ducks. In the 2010–11 season, duck harvest species composition was primarily mallard (64 percent), gadwall (9 percent), green-winged teal (9 percent), wigeon (7 percent), and other species (11 percent).

Goose harvest species composition in 2010–11 at Mni Sho Sho was approximately 50 percent Canada geese, 48 percent snow geese, and 2 percent white-fronted geese.

The Tribe anticipates a duck harvest similar to those of the previous 3 years and a goose harvest below the target harvest level of 3,000 to 4,000 geese. All basic Federal regulations contained in 50 CFR part 20, including the use of nontoxic shot, Migratory Waterfowl Hunting and Conservation Stamps, etc., would be observed by the Tribe's proposed regulations. In addition, the Lower Brule Sioux Tribe has an official Conservation Code that was established by Tribal Council Resolution in June 1982 and updated in 1996.

We plan to approve the Tribe's requested regulations for the Lower Brule Reservation given that the seasons' dates fall within final Federal flyway frameworks (applies to nontribal hunters only).

(m) Lower Elwha Klallam Tribe, Port Angeles, Washington (Tribal Members Only)

Since 1996, the Service and the Point No Point Treaty Tribes, of which Lower Elwha was one, have cooperated to establish special regulations for migratory bird hunting. The Tribes are now acting independently and the Lower Elwha Klallam Tribe would like to establish migratory bird hunting regulations for tribal members for the 2011–12 season. The Tribe has a reservation on the Olympic Peninsula in Washington State and is a successor to the signatories of the Treaty of Point No Point of 1855.

For the 2011–12 season, the Lower Elwha Klallam Tribe requests a duck and coot season from September 17, 2011, to January 2, 2012. The daily bag limit will be seven ducks including no more than two hen mallards, one pintail, one canvasback, and two redheads. The daily bag and possession limit on harlequin duck will be one per season. The coot daily bag limit will be 25. The possession limit will be twice the daily bag limit, except as noted above.

For geese, the Tribe requests a season from September 17, 2011, to January 2, 2012. The daily bag limit will be four, including no more than three light geese. The season on Aleutian Canada geese will be closed.

For brant, the Tribe proposes to close the season.

For mourning doves, band-tailed pigeon, and snipe, the Tribe requests a season from September 17, 2011, to January 2, 2012, with a daily bag limit of 10, 2, and 8, respectively. The possession limit will be twice the daily bag limit.

All Tribal hunters authorized to hunt migratory birds are required to obtain a tribal hunting permit from the Lower Elwha Klallam Tribe pursuant to tribal law. Hunting hours would be from one-half hour before sunrise to sunset. Only steel, tungsten-iron, tungsten-polymer, tungsten-matrix, and tin shot are allowed for hunting waterfowl. It is unlawful to use or possess lead shot while hunting waterfowl.

The Tribe typically anticipates harvest to be fewer than 20 birds. Tribal reservation police and Tribal fisheries enforcement officers have the authority to enforce these migratory bird hunting regulations.

The Service proposes to approve the request for special migratory bird hunting regulations for the Lower Elwha Klallam Tribe.

(n) Makah Indian Tribe, Neah Bay, Washington (Tribal Members Only)

The Makah Indian Tribe and the Service have been cooperating to establish special regulations for migratory game birds on the Makah Reservation and traditional hunting land off the Makah Reservation since the 2001–02 hunting season. Lands off the Makah Reservation are those contained within the boundaries of the State of Washington Game Management Units 601–603.

The Makah Indian Tribe proposes a duck and coot hunting season from September 24, 2011, to January 29, 2012. The daily bag limit is seven ducks, including no more than five mallards (only two hen mallard), one canvasback, one pintail, three scaup, and one redhead. The daily bag limit for coots is 25. The Tribe has a year-round closure on wood ducks and harlequin ducks. Shooting hours for all species of waterfowl are one-half hour before sunrise to sunset.

For geese, the Tribe proposes that the season open on September 24, 2011, and close January 29, 2012. The daily bag limit for geese is four and one brant. The Tribe notes that there is a year-round closure on Aleutian and Dusky Canada geese.

For band-tailed pigeons, the Tribe proposes that the season open September 17, 2011, and close October 30, 2011. The daily bag limit for band-tailed pigeons is two.

The Tribe anticipates that harvest under this regulation will be relatively low since there are no known dedicated waterfowl hunters and any harvest of waterfowl or band-tailed pigeons is usually incidental to hunting for other species, such as deer, elk, and bear. The Tribe expects fewer than 50 ducks and 10 geese to be harvested during the 2011–12 migratory bird hunting season.

All other Federal regulations contained in 50 CFR part 20 would apply. The following restrictions are also usually proposed by the Tribe:

(1) As per Makah Ordinance 44, only shotguns may be used to hunt any species of waterfowl. Additionally, shotguns must not be discharged within 0.25 miles of an occupied area.

(2) Hunters must be eligible, enrolled Makah tribal members and must carry their Indian Treaty Fishing and Hunting Identification Card while hunting. No tags or permits are required to hunt waterfowl.

(3) The Cape Flattery area is open to waterfowl hunting, except in designated wilderness areas, or within 1 mile of Cape Flattery Trail, or in any area that is closed to hunting by another ordinance or regulation.

(4) The use of live decoys and/or baiting to pursue any species of waterfowl is prohibited.

(5) Steel or bismuth shot only for waterfowl is allowed; the use of lead shot is prohibited.

(6) The use of dogs is permitted to hunt waterfowl.

We plan to approve the Makah Indian Tribe's requested 2011–12 special migratory bird hunting regulations.

(o) Navajo Nation, Navajo Indian Reservation, Window Rock, Arizona (Tribal Members and Nontribal Hunters)

Since 1985, we have established uniform migratory bird hunting regulations for tribal members and nonmembers on the Navajo Indian Reservation (in parts of Arizona, New Mexico, and Utah). The Navajo Nation owns almost all lands on the reservation and has full wildlife management authority.

For the 2011–12 season, the Navajo Nation requests special migratory bird hunting regulations on the reservation for both tribal and nontribal hunters for ducks (including mergansers), Canada geese, coots, band-tailed pigeons, and mourning doves. For ducks, mergansers, Canada geese, and coots, the Tribe requests the earliest opening dates and longest seasons, and the same daily bag and possession limits allowed to Pacific Flyway States under final Federal frameworks.

For both mourning dove and band-tailed pigeons, the Navajo Nation proposes seasons of September 1 through September 30, 2011, with daily bag limits of 10 and 5, respectively. Possession limits would be twice the daily bag limits.

The Nation requires tribal members and nonmembers to comply with all basic Federal migratory bird hunting regulations in 50 CFR part 20 pertaining to shooting hours and manner of taking. In addition, each waterfowl hunter 16 years of age or over must carry on his/her person a valid Migratory Bird Hunting and Conservation Stamp (Duck Stamp), which must be signed in ink across the face. Special regulations established by the Navajo Nation also apply on the reservation.

The Tribe anticipates a total harvest of fewer than 500 mourning doves; fewer than 10 band-tailed pigeons; fewer than 1,000 ducks, coots, and mergansers; and fewer than 1,000 Canada geese for the 2011–12 season. The Tribe will measure harvest by mail survey forms. Through the established Navajo Nation Code, Title 17, 18, and 23 U.S.C. 1165, the Tribe will take action to close the season, reduce bag limits, or take other appropriate actions if the harvest is detrimental to the migratory bird resource.

We propose to approve the Navajo Nation's special migratory bird season.

(p) Oneida Tribe of Indians of Wisconsin, Oneida, Wisconsin (Tribal Members Only)

Since 1991–92, the Oneida Tribe of Indians of Wisconsin and the Service have cooperated to establish uniform regulations for migratory bird hunting by tribal and nontribal hunters within the original Oneida Reservation boundaries. Since 1985, the Oneida Tribe's Conservation Department has enforced the Tribe's hunting regulations within those original reservation limits. The Oneida Tribe also has a good working relationship with the State of Wisconsin and the majority of the seasons and limits are the same for the Tribe and Wisconsin.

In a May 12, 2011, letter, the Tribe proposed special migratory bird hunting regulations. For ducks, the Tribe described the general outside dates as being September 18 through December 4, 2011, with a closed segment of November 19 to 27, 2011. The Tribe proposes a daily bag limit of six birds, which could include no more than six mallards (three hen mallards), six wood duck, one redhead, two pintail, and one hooded merganser.

For geese, the Tribe requests a season between September 1 and January 1, 2012, with a daily bag limit of five Canada geese from September 1 through 18, 2011, and three from September 19, 2011, through January 1, 2012. The Tribe will close the season November 19 to 27, 2011. If a quota of 300 geese is attained before the season concludes, the Tribe will recommend closing the season early.

For woodcock, the Tribe proposes a season between September 3 and November 6, 2011, with a daily bag and possession limit of 5 and 10, respectively.

For mourning dove, the Tribe proposes a season between September 1 and November 6, 2011, with a daily bag and possession limit of 10 and 20, respectively.

The Tribe proposes shooting hours be one-half hour before sunrise to one-half hour after sunset. Nontribal hunters hunting on the Reservation or on lands under the jurisdiction of the Tribe must comply with all State of Wisconsin regulations, including shooting hours of one-half hour before sunrise to sunset, season dates, and daily bag limits. Tribal members and nontribal hunters hunting on the Reservation or on lands under the jurisdiction of the Tribe must observe all basic Federal migratory bird hunting regulations found in 50 CFR part 20, with the following exceptions: Oneida members would be exempt from the purchase of the Migratory Waterfowl Hunting and Conservation Stamp (Duck Stamp); and shotgun capacity is not limited to three shells.

The Service proposes to approve the request for special migratory bird hunting regulations for the Oneida Tribe of Indians of Wisconsin.

(q) Point No Point Treaty Council Tribes, Kingston, Washington (Tribal Members Only)

We are establishing uniform migratory bird hunting regulations for tribal members on behalf of the Point No Point Treaty Council Tribes, consisting of the Port Gamble S'Klallam and Jamestown S'Klallam Tribes. The two tribes have reservations and ceded areas in northwestern Washington State and are the successors to the signatories of the Treaty of Point No Point of 1855. These proposed regulations will apply to tribal members both on and off reservations within the Point No Point Treaty Areas; however, the Port Gamble S'Klallam and Jamestown S'Klallam Tribal season dates differ only where indicated below.

For the 2011–12 season, the Point No Point Treaty Council requests special migratory bird hunting regulations for the 2011–12 hunting season for both the Jamestown S'Klallam and Port Gamble S'Klallam Tribes. For ducks and coots hunting season, the Jamestown S'Klallam Tribe proposes the season open September 15, 2011, and close February 1, 2012. The Port Gamble S'Klallam Tribes proposes the season open from September 1, 2011, to February 1, 2012. The daily bag limit is seven ducks, including no more than two hen mallards, one canvasback, one pintail, two redhead, and four scoters. The daily bag limit for coots is 25. The daily bag limit and possession limit on harlequin ducks is one per season. The daily possession limits are double the daily bag limits except where noted.

For geese, the Point No Point Treaty Council proposes the season open on September 15, 2011, and close March 10, 2012. The daily bag limit for geese is four, not to include more than three light geese. The Council notes that there is a year-round closure on Aleutian and Cackling Canada geese. For brant, the Council proposes the season open on November 13, 2011, and close January 31, 2012. The daily bag limit for brant is two.

For band-tailed pigeons and snipe, the Port Gamble S'Klallam Tribe proposes the season open September 1, 2011, and close March 10, 2012. The Jamestown S'Klallam Tribe proposes the season

open September 15, 2011, and close March 10, 2012. The daily bag limit for band-tailed pigeons is two and for snipe is eight. For mourning dove, the Port Gamble S'Klallam Tribe proposes the season open September 1, 2011, and close January 31, 2012. The Jamestown S'Klallam Tribe proposes the season open September 15, 2011, and close January 14, 2012. The daily bag limit for mourning dove is 10.

The Tribe anticipates a total harvest of fewer than 200 birds for the 2011–12 season. The Tribal Fish and Wildlife enforcement officers have the authority to enforce these tribal regulations.

We propose to approve the Point No Point Treaty Council Tribe's special migratory bird seasons.

(r) Sault Ste. Marie Tribe of Chippewa Indians, Sault Ste. Marie, Michigan (Tribal Members Only)

The Sault Ste. Marie Tribe of Chippewa Indians is a federally recognized self-governing Indian Tribe, distributed throughout the eastern Upper Peninsula and northern Lower Peninsula of Michigan. The Tribe has retained the right to hunt, fish, trap, and gather on the lands ceded in the Treaty of Washington (1836).

In a May 31, 2011, letter, the Tribe proposed special migratory bird hunting regulations. For ducks, mergansers, and common snipe, the Tribe proposes outside dates as September 15 through December 31, 2011. The Tribe proposes a daily bag limit of 20 ducks, which could include no more than 10 mallards (5 hen mallards), 5 wood duck, 5 black duck, and 5 canvasback. The merganser daily bag limit is 10 in the aggregate and 16 for common snipe.

For geese, coot, gallinule, sora, and Virginia rail, the Tribe requests a season from September 1 to December 31, 2011. The daily bag limit for geese is 20, in the aggregate. The daily bag limit for coot, gallinule, sora, and Virginia rail is 20 in the aggregate.

For woodcock, the Tribe proposes a season between September 2 and December 1, 2011, with a daily bag and possession limit of 10 and 20, respectively.

For mourning dove, the Tribe proposes a season between September 1 and November 14, 2011, with a daily bag and possession limit of 10 and 20, respectively.

All Sault Tribe members exercising hunting treaty rights within the 1836 Ceded Territory are required to submit annual harvest reports including date of harvest, number and species harvested, and location of harvest. Hunting hours would be from one-half hour before sunrise to one-half hour after sunset. All other regulations in 50 CFR part 20 apply including the use of only nontoxic shot for hunting waterfowl.

The Service proposes to approve the request for special migratory bird hunting regulations for the Sault Ste. Marie Tribe of Chippewa Indians.

(s) Shoshone–Bannock Tribes, Fort Hall Indian Reservation, Fort Hall, Idaho (Nontribal Hunters)

Almost all of the Fort Hall Indian Reservation is tribally owned. The Tribes claim full wildlife management authority throughout the reservation, but the Idaho Fish and Game Department has disputed tribal jurisdiction, especially for hunting by nontribal members on reservation lands owned by non-Indians. As a compromise, since 1985, we have established the same waterfowl hunting regulations on the reservation and in a surrounding off-reservation State zone. The regulations were requested by the Tribes and provided for different season dates than in the remainder of the State. We agreed to the season dates because they would provide additional protection to mallards and pintails. The State of Idaho concurred with the zoning arrangement. We have no objection to the State's use of this zone again in the 2011–12 hunting season, provided the duck and goose hunting season dates are the same as on the reservation.

In a proposal for the 2011–12 hunting season, the Shoshone–Bannock Tribes requested a continuous duck (including mergansers) season, with the maximum number of days and the same daily bag and possession limits permitted for Pacific Flyway States under the final Federal frameworks. The Tribes propose a duck and coot season with, if the same number of hunting days is permitted as last year, an opening date of October 1, 2011, and a closing date of January 13, 2012. The Tribes anticipate harvest will be between 2,000 and 5,000 ducks.

The Tribes also requested a continuous goose season with the maximum number of days and the same daily bag and possession limits permitted in Idaho under Federal frameworks. The Tribes propose that, if the same number of hunting days is permitted as in previous years, the season would have an opening date of October 1, 2011, and a closing date of January 13, 2012. The Tribes anticipate harvest will be between 4,000 and 6,000 geese.

The Tribe requests a common snipe season with the maximum number of days and the same daily bag and possession limits permitted in Idaho under Federal frameworks. The Tribes propose that, if the same number of hunting days is permitted as in previous years, the season would have an opening date of October 1, 2011, and a closing date of January 13, 2012.

Nontribal hunters must comply with all basic Federal migratory bird hunting regulations in 50 CFR part 20 pertaining to shooting hours, use of steel shot, and manner of taking. Special regulations established by the Shoshone–Bannock Tribes also apply on the reservation.

We note that the requested regulations are nearly identical to those of last year, and we propose to approve them for the 2011–12 hunting season given that the seasons' dates fall within the final Federal flyway frameworks (applies to nontribal hunters only).

(t) Skokomish Tribe, Shelton, Washington (Tribal Members Only)

Since 1996, the Service and the Point No Point Treaty Tribes, of which the Skokomish Tribe was one, have cooperated to establish special regulations for migratory bird hunting. The Tribes have been acting independently since 2005, and the Skokomish Tribe would like to establish migratory bird hunting regulations for tribal members for the 2011–12 season. The Tribe has a reservation on the Olympic Peninsula in Washington State and is a successor to the signatories of the Treaty of Point No Point of 1855.

The Skokomish Tribe requests a duck and coot season from September 16, 2011, to February 28, 2012. The daily bag limit is seven ducks, including no more than two hen mallards, one pintail, one canvasback, and two redheads. The daily bag and possession limit on harlequin duck is one per season. The coot daily bag limit is 25. The possession limit is twice the daily bag limit except as noted above.

For geese, the Tribe requests a season from September 16, 2011, to February 28, 2012. The daily bag limit is four, including no more than three light geese. The season on Aleutian Canada geese is closed. For brant, the Tribe proposes a season from November 1, 2011, to February 15, 2012, with a daily bag limit of two. The possession limit is twice the daily bag limit.

For mourning doves, band-tailed pigeon, and snipe, the Tribe requests a season from September 16, 2011, to February 28, 2012, with a daily bag limit of 10, 2, and 8, respectively. The possession limit is twice the daily bag limit.

All Tribal hunters authorized to hunt migratory birds are required to obtain a tribal hunting permit from the Skokomish Tribe pursuant to tribal law. Hunting hours would be from one-half

hour before sunrise to sunset. Only steel, tungsten-iron, tungsten-polymer, tungsten-matrix, and tin shot are allowed for hunting waterfowl. It is unlawful to use or possess lead shot while hunting waterfowl.

The Tribe anticipates harvest to be fewer than 150 birds. The Skokomish Public Safety Office enforcement officers have the authority to enforce these migratory bird hunting regulations.

We propose to approve the Skokomish Tribe's requested migratory bird hunting season.

(u) Spokane Tribe of Indians, Spokane Indian Reservation, Wellpinit, Washington (Tribal Members Only)

The Spokane Tribe of Indians wishes to establish waterfowl seasons on their reservation for its membership to access as an additional resource. An established waterfowl season on the reservation will allow access to a resource for members to continue practicing a subsistence lifestyle.

The Spokane Indian Reservation is located in northeastern Washington State. The reservation comprises approximately 157,000 acres. The boundaries of the Reservation are the Columbia River to the west, the Spokane River to the south (now Lake Roosevelt), Tshimikn Creek to the east, and the 48th Parallel as the north boundary. Tribal membership comprises approximately 2,300 enrolled Spokane Tribal Members. Prior to 1939, the Spokane Tribe was primarily a salmon people; upon completion of Grand Coulee Dam creating Lake Roosevelt, the development of hydroelectricity without passage ultimately removed salmon access from historical fishing areas for the Spokane Tribe for the past 70 years.

These proposed regulations would allow Tribal Members, spouses of Spokane Tribal Members, and first-generation descendants of a Spokane Tribal Member with a tribal permit and Federal Waterfowl stamp an opportunity to utilize the reservation and ceded lands. It will also benefit tribal membership through access to this resource throughout Spokane Tribal ceded lands in eastern Washington. By Spokane Tribal Referendum, spouses of Spokane Tribal Members and children of Spokane Tribal Members not enrolled are allowed to harvest game animals within the Spokane Indian Reservation with the issuance of hunting permits.

For the 2011–12 season, the Tribe requests to establish duck seasons that would run from September 2, 2011, through January 31, 2012. The tribe is requesting the daily bag limit for ducks to be consistent with final Federal frameworks. The possession limit is twice the daily bag limit.

The Tribe proposes a season on geese starting September 2, 2011, and ending on January 31, 2012. The tribe is requesting the daily bag limit for geese to be consistent with final Federal frameworks. The possession limit is twice the daily bag limit.

Based on the quantity of requests the Spokane Tribe of Indians has received, the tribe anticipates harvest levels for the 2011–12 season for both ducks and geese to be below 100 total birds with goose harvest at fewer than 50. Hunter success will be monitored through mandatory harvest reports returned within 30 days of the season closure.

We propose to approve the Spokane Tribe's requested 2011–12 special migratory bird hunting regulations.

(v) Squaxin Island Tribe, Squaxin Island Reservation, Shelton, Washington (Tribal Members Only)

The Squaxin Island Tribe of Washington and the Service have cooperated since 1995 to establish special tribal migratory bird hunting regulations. These special regulations apply to tribal members on the Squaxin Island Reservation, located in western Washington near Olympia, and all lands within the traditional hunting grounds of the Squaxin Island Tribe.

For the 2011–12 season, the Tribe requests to establish duck and coot seasons that would run from September 1, 2011, through January 15, 2012. The daily bag limit for ducks is five per day and could include only one canvasback. The season on harlequin ducks is closed. For coots, the daily bag limit is 25. For snipe, the Tribe proposes that the season start on September 15, 2011, and end on January 15, 2012. The daily bag limit for snipe is eight. For band-tailed pigeon, the Tribe proposes that the season start on September 1, 2011, and end on December 31, 2011. The daily bag limit is five. The possession limit is twice the daily bag limit.

The Tribe proposes a season on geese starting September 15, 2011, and ending on January 15, 2012. The daily bag limit for geese is four, including no more than two snow geese. The season on Aleutian and cackling Canada geese is closed. For brant, the Tribe proposes that the season start on September 1, 2011, and end on December 31, 2011. The daily bag limit for brant is two. The possession limit is twice the daily bag limit.

We propose to approve the Tribe's requested 2011–12 special migratory bird hunting regulations.

(w) Stillaguamish Tribe of Indians, Arlington, Washington (Tribal Members Only)

The Stillaguamish Tribe of Indians and the Service have cooperated to establish special regulations for migratory game birds since 2001. We expect that the Tribe will request regulations to hunt all open and unclaimed lands under the Treaty of Point Elliott of January 22, 1855, including their main hunting grounds around Camano Island, Skagit Flats, and Port Susan to the border of the Tulalip Tribes Reservation. Ceded lands are located in Whatcom, Skagit, Snohomish, and Kings Counties, and a portion of Pierce County, Washington. The Stillaguamish Tribe of Indians is a federally recognized Tribe and reserves the Treaty Right to hunt (*U.S.* v. *Washington*).

The Tribe usually proposes that duck (including mergansers) and goose seasons run from October 1, 2011, to February 15, 2012. The daily bag limit on ducks (including sea ducks and mergansers) is 10 and must include no more than 7 mallards (only 3 of which can be hens), 3 pintails, 3 redheads, 3 scaup, and 3 canvasbacks. For geese, the daily bag limit is six. Possession limits are totals of these two daily bag limits.

The Tribe usually proposes that coot, brant, and snipe seasons run from October 1, 2011, to January 31, 2012. The daily bag limit for coot is 25. The daily bag limit on brant is three. The daily bag limit for snipe is 10. Possession limits are twice the daily bag limit.

The Tribe usually proposes that band-tailed pigeon and dove seasons run from September 1, 2011, to October 31, 2011. The daily bag limit for band-tailed pigeon is four. The daily bag limit on dove is 10. Possession limits are twice the daily bag limit.

Harvest is regulated by a punch card system. Tribal members hunting on lands under this proposal will observe all basic Federal migratory bird hunting regulations found in 50 CFR part 20, which will be enforced by the Stillaguamish Tribal law enforcement. Tribal members are required to use steel shot or a nontoxic shot as required by Federal regulations.

The Tribe anticipates a total harvest of 200 ducks, 100 geese, 50 mergansers, 100 coots, and 100 snipe. Anticipated harvest needs include subsistence and ceremonial needs. Certain species may be closed to hunting for conservation purposes, and consideration for the needs of certain species will be addressed.

Upon receipt of the 2011–12 Stillaguamish Tribe's hunting proposal, the Service proposes to approve the request for special migratory bird hunting regulations for the Stillaguamish Tribe of Indians.

(x) Swinomish Indian Tribal Community, LaConner, Washington (Tribal Members Only)

In 1996, the Service and the Swinomish Indian Tribal Community began cooperating to establish special regulations for migratory bird hunting. The Swinomish Indian Tribal Community is a federally recognized Indian Tribe consisting of the Swinomish, Lower Skagit, Samish, and Kikialous. The Swinomish Reservation was established by the Treaty of Point Elliott of January 22, 1855, and lies in the Puget Sound area north of Seattle, Washington.

For the 2011–12 season, we anticipate that the Tribal Community will request to establish a migratory bird hunting season on all areas that are open and unclaimed and consistent with the meaning of the treaty. The Tribal Community usually requests to establish duck, merganser, Canada goose, brant, and coot seasons opening on the earliest possible date allowed by the final Federal frameworks for the Pacific Flyway and closing 30 days after the State of Washington closes its season. The Swinomish Indian Tribal Community requests an additional three birds of each species over the numbers allowed by the State for daily bag and possession limits.

The Community normally anticipates that the regulations will result in the harvest of approximately 300 ducks, 50 Canada geese, 75 mergansers, 100 brant, and 50 coot. The Swinomish utilize a report card and permit system to monitor harvest and will implement steps to limit harvest where conservation is needed. All tribal regulations will be enforced by tribal fish and game officers.

On reservation, the Tribal Community usually proposes a hunting season for the above-mentioned species beginning on the earliest possible opening date and closing March 9, 2012. The Swinomish manage harvest by a report card and permit system, and we anticipate harvest will be similar to that expected off reservation.

We believe the estimated harvest by the Swinomish will be minimal and will not adversely affect migratory bird populations. Upon receipt of the 2011–12 Swinomish hunting proposal, we propose to approve the Tribe's requested 2011–12 special migratory bird hunting regulations.

(y) The Tulalip Tribes of Washington, Tulalip Indian Reservation, Marysville, Washington (Tribal Members and Nontribal Hunters)

The Tulalip Tribes are the successors in interest to the Tribes and bands signatory to the Treaty of Point Elliott of January 22, 1855. The Tulalip Tribes' government is located on the Tulalip Indian Reservation just north of the City of Everett in Snohomish County, Washington. The Tribes or individual tribal members own all of the land on the reservation, and they have full wildlife management authority. All lands within the boundaries of the Tulalip Tribes Reservation are closed to nonmember hunting unless opened by Tulalip Tribal regulations.

We expect the Tribe to propose tribal and nontribal hunting regulations for the 2011–12 season. Migratory waterfowl hunting by Tulalip Tribal members is authorized by Tulalip Tribal Ordinance No. 67. For ducks, mergansers, coot, and snipe, the proposed season for tribal members usually would be from September 8, 2011, through February 28, 2012. In the case of nontribal hunters hunting on the reservation, the season would be the latest closing date and the longest period of time allowed under the final Pacific Flyway Federal frameworks. Daily bag and possession limits for Tulalip Tribal members would be 7 and 14 ducks, respectively, except that for blue-winged teal, canvasback, harlequin, pintail, and wood duck, the bag and possession limits would be the same as those established in accordance with final Federal frameworks. For nontribal hunters, bag and possession limits would be the same as those permitted under final Federal frameworks. For coot, daily bag and possession limits are 25 and 50, respectively, and for snipe 8 and 18, respectively. Nontribal hunters should check with the Tulalip tribal authorities regarding additional conservation measures that may apply to specific species managed within the region. Ceremonial hunting may be authorized by the Department of Natural Resources at any time upon application of a qualified tribal member. Such a hunt must have a bag limit designed to limit harvest only to those birds necessary to provide for the ceremony.

For geese, tribal members usually propose a season from September 8, 2011, through February 28, 2012. Nontribal hunters would be allowed the longest season and the latest closing date permitted by the Pacific Flyway Federal frameworks. For tribal hunters, the goose daily bag and possession limits would be 7 and 14, respectively, except that the bag limits for brant, cackling Canada geese, and dusky Canada geese would be those established in accordance with final Federal frameworks. For nontribal hunters hunting on reservation lands, the daily bag and possession limits would be those established in accordance with final Federal frameworks for the Pacific Flyway. The Tulalip Tribes also set a maximum annual bag limit for those tribal members who engage in subsistence hunting of 365 ducks and 365 geese.

All hunters on Tulalip Tribal lands are required to adhere to shooting hour regulations set at one-half hour before sunrise to sunset, special tribal permit requirements, and a number of other tribal regulations enforced by the Tribe. Each nontribal hunter 16 years of age and older hunting pursuant to Tulalip Tribes' Ordinance No. 67 must possess a valid Federal Migratory Bird Hunting and Conservation Stamp and a valid State of Washington Migratory Waterfowl Stamp. Each hunter must validate stamps by signing across the face.

Although the season length requested by the Tulalip Tribes appears to be quite liberal, harvest information indicates a total take by tribal and nontribal hunters of fewer than 1,000 ducks and 500 geese annually.

Upon receipt of the 2011–12 Squaxin Island Tribe's hunting proposal, we propose to approve the Tulalip Tribe's request to have a special season.

(z) Upper Skagit Indian Tribe, Sedro Woolley, Washington (Tribal members only)

The Upper Skagit Indian Tribe and the Service have cooperated to establish special regulations for migratory game birds since 2001. The Tribe has jurisdiction over lands within Skagit, Island, and Whatcom Counties, Washington. The Tribe issues tribal hunters a harvest report card that will be shared with the State of Washington.

For the 2011–12 season, the Tribe requests a duck season starting October 1, 2011, and ending February 28, 2012. The Tribe proposes a daily bag limit of 15 with a possession limit of 20. The Tribe requests a coot season starting October 15, 2011, and ending February 15, 2012. The coot daily bag limit is 20 with a possession limit of 30.

The Tribe proposes a goose season from October 15, 2011, to February 28, 2012, with a daily bag limit of seven geese and a possession limit of 10. For brant, the Tribe proposes a season from November 1 to November 10, 2011, with a daily bag and possession limit of 2.

The Tribe proposes a mourning dove season between September 1 and December 31, 2011, with a daily bag limit of 12 and possession limit of 15.

The anticipated migratory bird harvest under this proposal would be 100 ducks, 5 geese, 2 brant, and 10 coots. Tribal members must have the tribal identification and tribal harvest report card on their person to hunt. Tribal members hunting on the Reservation will observe all basic Federal migratory bird hunting regulations found in 50 CFR part 20, except shooting hours would be 15 minutes before official sunrise to 15 minutes after official sunset.

The Service proposes to approve the request for special migratory bird hunting regulations for the Upper Skagit Indian Tribe.

(aa) Wampanoag Tribe of Gay Head, Aquinnah, Massachusetts (Tribal Members Only)

The Wampanoag Tribe of Gay Head is a federally recognized Tribe located on the island of Martha's Vineyard in Massachusetts. The Tribe has approximately 560 acres of land, which it manages for wildlife through its natural resources department. The Tribe also enforces its own wildlife laws and regulations through the natural resources department.

For the 2011–12 season, the Tribe proposes a duck season of October 15, 2011, through October 23, 2011, and November 1, 2011, through February 25, 2012. The Tribe proposes a daily bag limit of six birds, which could include no more than four hen mallards, four mottled ducks, one fulvous whistling duck, four mergansers, three scaup, two hooded mergansers, three wood ducks, one canvasback, two redheads, two pintail, and four of all other species not listed. The season for harlequin ducks is closed. The Tribe proposes a teal (green-winged and blue) season of October 13, 2011, through February 25, 2012. A daily bag limit of 10 teal would be in addition to the daily bag limit for ducks.

For sea ducks, the Tribe usually proposes a season between October 8, 2011, and February 25, 2012, with a daily bag limit of seven, which could include no more than one hen eider and four of any one species unless otherwise noted above.

For Canada geese, the Tribe usually requests a season between September 7 and September 24, 2011, and October 31, 2011, and February 25, 2012, with a daily bag limit of 8 Canada geese. For snow geese, the tribe requests a season between September 7 to September 24, 2011, and November 25, 2011, to February 25, 2012, with a daily bag limit of 15 snow geese.

For woodcock, the Tribe proposes a season between October 13 and November 26, 2011, with a daily bag limit of three. For sora and Virginia rails, the Tribe requests a season of September 1, 2011, through November 9, 2011, with a daily bag limit of 5 sora and 10 Virginia rails. For snipe, the Tribe requests a season of September 1, 2011, through December 16, 2011, with a daily bag limit of 8.

Prior to 2011, the Tribe had 22 registered tribal hunters and estimates harvest to be no more than 15 geese, 25 mallards, 25 teal, 50 black ducks, and 50 of all other species combined. Tribal members hunting on the Reservation will observe all basic Federal migratory bird hunting regulations found in 50 CFR part 20. The Tribe requires hunters to register with the Harvest Information Program.

We propose to approve the Wampanoag Tribe of Gay Head's requested 2011–12 special migratory bird hunting regulations.

(bb) White Earth Band of Ojibwe, White Earth, Minnesota (Tribal Members Only)

The White Earth Band of Ojibwe is a federally recognized tribe located in northwest Minnesota and encompasses all of Mahnomen County and parts of Becker and Clearwater Counties. The reservation employs conservation officers to enforce migratory bird regulations. The Tribe and the Service first cooperated to establish special tribal regulations in 1999.

For the 2011–12 migratory bird hunting season, the White Earth Band of Ojibwe requests a duck season to start September 17 and end December 11, 2011. For ducks, they request a daily bag limit of 10, including no more than 2 mallards, 1 pintail, and 1 canvasback. For mergansers, the Tribe proposes the season to start September 17 and end December 18, 2011. The merganser daily bag limit would be five with no more than two hooded mergansers. For geese, the Tribe proposes an early season from September 1 through September 25, 2011, and a late season from September 26, 2011, through December 19, 2011. The early season daily bag limit is eight geese, and the late season daily bag limit is five geese.

For coots, dove, rail, woodcock, and snipe, the Tribe proposes a September 1 through November 30, 2011, season with daily bag limits of 20 coots, 25 doves, 25 rails, 10 woodcock, and 10 snipe. Shooting hours are one-half hour before sunrise to one-half hour after sunset. Nontoxic shot is required.

Based on past harvest surveys, the Tribe anticipates harvest of 1,000 to 2,000 Canada geese and 1,000 to 1,500 ducks. The White Earth Reservation Tribal Council employs four full-time conservation officers to enforce migratory bird regulations.

We propose to approve the White Earth Band of Ojibwe's request to have a special season.

(cc) White Mountain Apache Tribe, Fort Apache Indian Reservation, Whiteriver, Arizona (Tribal Members and Nontribal Hunters)

The White Mountain Apache Tribe owns all reservation lands, and the Tribe has recognized full wildlife management authority. In past years, the White Mountain Apache Tribe has requested regulations that are essentially unchanged from those agreed to since the 1997–98 hunting year.

The hunting zone for waterfowl is restricted and is described as: the length of the Black River west of the Bonito Creek and Black River confluence and the entire length of the Salt River forming the southern boundary of the reservation; the White River, extending from the Canyon Day Stockman Station to the Salt River; and all stock ponds located within Wildlife Management Units 4, 5, 6, and 7. Tanks located below the Mogollon Rim, within Wildlife Management Units 2 and 3, will be open to waterfowl hunting during the 2011–12 season. The length of the Black River east of the Black River/Bonito Creek confluence is closed to waterfowl hunting. All other waters of the reservation would be closed to waterfowl hunting for the 2011–12 season.

For nontribal and tribal hunters, the Tribe usually proposes a continuous duck, coot, merganser, gallinule, and moorhen hunting season, with an opening date of October 10, 2011, and a closing date of January 24, 2012. The Tribe usually proposes a separate scaup season, with an opening date of October 10, 2011, and a closing date of December 6, 2011. The Tribe proposes a daily duck (including mergansers) bag limit of seven, which may include no more than two redheads, one pintail, and seven mallards (including no more than two hen mallards). The season on canvasback is closed. The daily bag limit for coots, gallinules, and moorhens would be 25, singly or in the aggregate. For geese, the Tribe usually proposes a season from October 10, 2011, through January 31, 2012. Hunting would be limited to Canada geese, and the daily bag limit would be three.

Season dates for band-tailed pigeons and mourning doves would usually run

concurrently from September 1 through September 15, 2011, in Wildlife Management Unit 10 and all areas south of Y–70 and Y–10 in Wildlife Management Unit 7, only. Proposed daily bag limits for band-tailed pigeons and mourning doves would be 3 and 10, respectively.

Possession limits for the above species are twice the daily bag limits. Shooting hours would be from one-half hour before sunrise to sunset. There would be no open season for sandhill cranes, rails, and snipe on the White Mountain Apache lands under this proposal. A number of special regulations apply to tribal and nontribal hunters, which may be obtained from the White Mountain Apache Tribe Game and Fish Department.

Upon receipt of the 2011–12 hunting proposal, we propose to approve the White Mountain Apache Tribe's requested 2011–12 special migratory bird hunting regulations.

(dd) Yankton Sioux Tribe, Marty, South Dakota (Tribal Members and Nontribal Hunters)

The Yankton Sioux Tribe has yet to submit a waterfowl hunting proposal for the 2011–12 season. The Yankton Sioux tribal waterfowl hunting season usually would be open to both tribal members and nontribal hunters. The waterfowl hunting regulations would apply to tribal and trust lands within the external boundaries of the reservation.

For ducks (including mergansers) and coots, the Yankton Sioux Tribe usually proposes a season starting October 9, 2011, and running for the maximum amount of days allowed under the final Federal frameworks. Daily bag and possession limits would be six ducks, which may include no more than five mallards (no more than two hens), one canvasback (when the season is open), two redheads, three scaup, one pintail, or two wood ducks. The bag limit for mergansers is five, which would include no more than one hooded merganser. The coot daily bag limit is 15.

For geese, the Tribe usually requests a dark goose (Canada geese, brant, white-fronted geese) season starting October 29, 2011, and closing January 31, 2012. The daily bag limit would be three geese (including no more than one white-fronted goose or brant). Possession limits would be twice the daily bag limit. For white geese, the proposed hunting season would start October 29, 2011, and run for the maximum amount of days allowed under the final Federal frameworks for the State of South Dakota. Daily bag and possession limits would equal the maximum allowed under Federal frameworks.

All hunters would have to be in possession of a valid tribal license while hunting on Yankton Sioux trust lands. Tribal and nontribal hunters must comply with all basic Federal migratory bird hunting regulations in 50 CFR part 20 pertaining to shooting hours and the manner of taking. Special regulations established by the Yankton Sioux Tribe also apply on the reservation.

During the 2005–06 hunting season, the Tribe reported that 90 nontribal hunters took 400 Canada geese, 75 light geese, and 90 ducks. Forty-five tribal members harvested fewer than 50 geese and 50 ducks.

We plan to approve the Yankton Sioux 2011–12 hunting seasons upon receipt of their proposal based on the provisions described above.

Public Comments

The Department of the Interior's policy is, whenever possible, to afford the public an opportunity to participate in the rulemaking process. Accordingly, we invite interested persons to submit written comments, suggestions, or recommendations regarding the proposed regulations. Before promulgating final migratory game bird hunting regulations, we will consider all comments we receive. These comments, and any additional information we receive, may lead to final regulations that differ from these proposals.

You may submit your comments and materials concerning this proposed rule by one of the methods listed in the **ADDRESSES**. We will not accept comments sent by e-mail or fax. We will not consider hand-delivered comments that we do not receive, or mailed comments that are not postmarked, by the date specified in **DATES**.

We will post all comments in their entirety—including your personal identifying information—on *http://www.regulations.gov.* Before including your address, phone number, e-mail address, or other personal identifying information in your comment, you should be aware that your entire comment—including your personal identifying information—may be made publicly available at any time. While you can ask us in your comment to withhold your personal identifying information from public review, we cannot guarantee that we will be able to do so.

Comments and materials we receive, as well as supporting documentation we used in preparing this proposed rule, will be available for public inspection on *http://www.regulations.gov,* or by appointment, during normal business hours, at the U.S. Fish and Wildlife Service, Division of Migratory Bird Management, Room 4107, 4501 North Fairfax Drive, Arlington, VA 22203.

For each series of proposed rulemakings, we will establish specific comment periods. As we previously noted in our April 8, 2011 proposed rule (76 FR 19877), because of the lateness when certain data becomes available, special circumstances limit the amount of time we can allow for public comment for this regulation and so we determine that a longer comment period in this case is impractical. We will consider, but possibly may not respond in detail to, each comment. As in the past, we will summarize all comments we receive during the comment period and respond to them after the closing date in the preambles of any final rules.

Required Determinations

Based on our most current data, we are affirming our required determinations made in the proposed rule; for descriptions of our actions to ensure compliance with the following statutes and Executive Orders, see our April 8, 2011, proposed rule (76 FR 19876):

- National Environmental Policy Act;
- Endangered Species Act;
- Regulatory Flexibility Act;
- Small Business Regulatory Enforcement Fairness Act;
- Paperwork Reduction Act;
- Unfunded Mandates Reform Act;
- Executive Orders 12630, 12866, 12988, 13132, 13175, and 13211.

List of Subjects in 50 CFR Part 20

Exports, Hunting, Imports, Reporting and recordkeeping requirements, Transportation, Wildlife.

Based on the results of migratory game bird studies, and having due consideration for any data or views submitted by interested parties, this proposed rulemaking may result in the adoption of special hunting regulations for migratory birds beginning as early as September 1, 2011, on certain Federal Indian reservations, off-reservation trust lands, and ceded lands. Taking into account both reserved hunting rights and the degree to which tribes have full wildlife management authority, the regulations only for tribal members or for both tribal and nontribal hunters may differ from those established by States in which the reservations, off-reservation trust lands, and ceded lands are located. The regulations will specify open seasons, shooting hours, and bag and possession limits for rails, coot, gallinules, woodcock, common snipe, band-tailed pigeons, mourning doves,

white-winged doves, ducks, mergansers, and geese.

The rules that eventually will be promulgated for the 2011–12 hunting season are authorized under the Migratory Bird Treaty Act (MBTA) of July 3, 1918 (40 Stat. 755; 16 U.S.C. 703 *et seq.*), as amended. The MBTA authorizes and directs the Secretary of the Interior, having due regard for the zones of temperature and for the distribution, abundance, economic value, breeding habits, and times and lines of flight of migratory game birds, to determine when, to what extent, and by what means such birds or any part, nest, or egg thereof may be taken, hunted, captured, killed, possessed, sold, purchased, shipped, carried, exported, or transported.

Dated: August 1, 2011.

Rachel Jacobson,

Acting Assistant Secretary for Fish and Wildlife and Parks.

[FR Doc. 2011–19851 Filed 8–5–11; 8:45 am]

BILLING CODE 4310–55–P

Reader Aids

Federal Register

Vol. 76, No. 152

Monday, August 8, 2011

CUSTOMER SERVICE AND INFORMATION

Federal Register/Code of Federal Regulations	
General Information, indexes and other finding aids	**202–741–6000**
Laws	**741–6000**
Presidential Documents	
Executive orders and proclamations	**741–6000**
The United States Government Manual	**741–6000**
Other Services	
Electronic and on-line services (voice)	**741–6020**
Privacy Act Compilation	**741–6064**
Public Laws Update Service (numbers, dates, etc.)	**741–6043**
TTY for the deaf-and-hard-of-hearing	**741–6086**

ELECTRONIC RESEARCH

World Wide Web

Full text of the daily Federal Register, CFR and other publications is located at: **www.fdsys.gov.**

Federal Register information and research tools, including Public Inspection List, indexes, and links to GPO Access are located at: **www.ofr.gov.**

E-mail

FEDREGTOC-L (Federal Register Table of Contents LISTSERV) is an open e-mail service that provides subscribers with a digital form of the Federal Register Table of Contents. The digital form of the Federal Register Table of Contents includes HTML and PDF links to the full text of each document.

To join or leave, go to **http://listserv.access.gpo.gov** and select *Online mailing list archives, FEDREGTOC-L, Join or leave the list (or change settings);* then follow the instructions.

PENS (Public Law Electronic Notification Service) is an e-mail service that notifies subscribers of recently enacted laws.

To subscribe, go to **http://listserv.gsa.gov/archives/publaws-l.html** and select *Join or leave the list (or change settings);* then follow the instructions.

FEDREGTOC-L and **PENS** are mailing lists only. We cannot respond to specific inquiries.

Reference questions. Send questions and comments about the Federal Register system to: **fedreg.infonara.gov**

The Federal Register staff cannot interpret specific documents or regulations.

Reminders. Effective January 1, 2009, the Reminders, including Rules Going Into Effect and Comments Due Next Week, no longer appear in the Reader Aids section of the Federal Register. This information can be found online at **http://www.regulations.gov.**

CFR Checklist. Effective January 1, 2009, the CFR Checklist no longer appears in the Federal Register. This information can be found online at **http://bookstore.gpo.gov/.**

FEDERAL REGISTER PAGES AND DATE, AUGUST

45653–46184 1
46185–46594 2
46595–47054 3
47055–47422 4
47423–47984 5
47985–48712 8

CFR PARTS AFFECTED DURING AUGUST

At the end of each month the Office of the Federal Register publishes separately a List of CFR Sections Affected (LSA), which lists parts and sections affected by documents published since the revision date of each title.

3 CFR

Proclamations:
8696 46183

Administrative Orders:
Notices:
Notice of July 28, 2011 45653

5 CFR

Proposed Rules:
213 47495
250 47516
302 47495
315 47495
330 47495
334 47495
362 47495
530 45710
531 ..... 45710, 47495
536 ..... 45710, 47495
550 47495
575 47495
890 47495

6 CFR

Proposed Rules:
31 46908

7 CFR

205 46595
1217 46185
1730 47055

Proposed Rules:
319 46209
923 46651

10 CFR

429 46202
430 46202

Proposed Rules:
26 46651
40 47085
430 47518
431 47518

12 CFR

Ch. III 47652

Proposed Rules:
240 46652

14 CFR

33 47423
39 ..... 45655, 45657, 46597, 47056, 47424, 47427, 47430
65 47058
71 ..... 47060, 47061, 47435
95 46202
97 ..... 47985, 47988

Proposed Rules:
39 ..... 45713, 47520, 47522, 48045, 48047, 48049

15 CFR

Proposed Rules:
Ch. VII 47527

16 CFR

Ch. II 46598
1450 47436

Proposed Rules:
305 45715
1130 48053

17 CFR

40 45666
200 46603
229 46603
230 46603
232 ..... 46603, 47438
239 46603
240 ..... 46603, 46960
249 ..... 46603, 46960

Proposed Rules:
1 ..... 45724, 45730, 47526
23 ..... 45724, 45730, 47526
39 ..... 45730, 47526
71 46212
229 47948
230 47948
239 47948
240 46668
249 47948

18 CFR

Proposed Rules:
357 46668

20 CFR

655 45667

21 CFR

Proposed Rules:
101 46671
870 ..... 47085, 48058
882 48062

22 CFR

126 47990

23 CFR

Proposed Rules:
655 46213

25 CFR

Proposed Rules:
Ch. III 47089

26 CFR

1 45673
54 46621

Proposed Rules:
40 46677
49 46677
54 46677

29 CFR

2590 46621

31 CFR

1010 45689

33 CFR

117 ....45690, 47440
165 ....45693, 46626, 47441, 47993, 47996

Proposed Rules:

165 ....45738, 48070
167 47529

37 CFR

370 45695
382 45695

38 CFR

21 45697

40 CFR

9 47996
51 48208
52 ....45705, 47062, 47068, 47074, 47076, 47443, 48002, 48006, 48208
72 48208
78 48208
82 47451
97 48208
721 47996
745 47918

Proposed Rules:

50 ....46084, 48073
52 ....45741, 47090, 47092, 47094
98 47392
260 48073
261 48073
370 48093
721 46678

41 CFR

Proposed Rules:

Ch. 301 ....46216Q

42 CFR

412 47836
413 48486
418 47302

Proposed Rules:

430 46684
433 46684
447 46684
457 46684

44 CFR

Proposed Rules:

67 ....46701, 46705, 46715, 46716

45 CFR

147 46621

46 CFR

Proposed Rules:

1 ....45908, 46217, 48101
2 47531
10 ....45908, 46217, 48101
11 ....45908, 46217, 48101
12 ....45908, 46217, 48101
13 ....45908, 46217, 48101
14 ....45908, 46217, 48101
15 ....45908, 46217
401 47095

47 CFR

64 ....47469, 47476

Proposed Rules:

9 47114

48 CFR

1816 46206

49 CFR

563 47478
571 48009
595 47078
1002 4662

Proposed Rules:

580 48101

50 CFR

17 ....46632, 47490
18 47010
80 46150
648 ....47491, 47492
679 ....45709, 46207, 46208, 47083, 47493

Proposed Rules:

17 ....46218, 46234, 46238, 46251, 46362, 47123, 47133
20 48694
622 46718
648 ....45742, 47533
665 46719

LIST OF PUBLIC LAWS

This is a continuing list of public bills from the current session of Congress which have become Federal laws. It may be used in conjunction with "P L U S" (Public Laws Update Service) on 202–741–6043. This list is also available online at *http://www.archives.gov/federal-register/laws*.

The text of laws is not published in the **Federal Register** but may be ordered in "slip law" (individual pamphlet) form from the Superintendent of Documents, U.S. Government Printing Office, Washington, DC 20402 (phone, 202–512–1808). The text will also be made available on the Internet from GPO's Federal Digital System (FDsys) at *http://www.gpo.gov/fdsys*. Some laws may not yet be available.

H.R. 1383/P.L. 112–26

Restoring GI Bill Fairness Act of 2011 (Aug. 3, 2011; 125 Stat. 268)

Last List August 4, 2011

Public Laws Electronic Notification Service (PENS)

PENS is a free electronic mail notification service of newly enacted public laws. To subscribe, go to *http://listserv.gsa.gov/archives/publaws-l.html*

Note: This service is strictly for E-mail notification of new laws. The text of laws is not available through this service. **PENS** cannot respond to specific inquiries sent to this address.